Missouri Department of Transportation

Bridge Division

Bridge Design Manual

Section 3.74

Revised 03/01/2000

Click Here for Index

SECTION 3

3.74 PILING

INDEX

3.74.1 Design

1.1.1 Pile Capacities - SEISMIC Preformance Category A
1.1.2 Pile Capacities - SEISMIC Preformance Category B, C & D
1.1.3 General Pile Data

1.2.1 Precast Concrete pile
1.2.2 CAST-IN-PLACE Concrete pile
1.2.3 CAST-IN-PLACE Concrete pile and Timber Pile
1.2.3.1 CAST-IN-PLACE Concrete pile
1.2.4 CAST-IN-PLACE Concrete pile (SEISMIC PREFORMANCE CATAGORIES B, C & D)
1.2.5 CAST-IN-PLACE Concrete Piles (20" & 24")

1.3.1 Steel Piles
1.3.2 Steel Bearing Pile (Hammer energy based on Pile Length)
1.3.3 Steel Bearing Pile (Hammer energy based on Design Bearing)

3.74.2 Details

2.1 Timber Piles
2.2 Steel Piles

3.74.3 MISSOURI STANDARD PLANS FOR HIGHWAY CONSTRUCTION

3.1.1 Concrete Piles (PRECAST) (702.01)
3.1.2 Concrete Piles (PRESTRESSED)(702.01)
3.1.3 Concrete Piles (CAST-IN-PLACE)(702.02)

PILE CAPACITY

SEISMIC PERFORMANCE CATEGORY A

DESIGN BEARING

"DESIGN BEARING" IS THE ACTUAL COMPUTED LOAD ON A PILE DUE TO ALL DEAD AND LIVE LOADS AND OTHER APPLICABLF FORCES WHICH MAY ACT ON THE STRUCTURE. THIS LOAD SHALL BE THAT PRODUCED BY USING THE MINIMUM NUMBER OF PILES WHICH GIVE LOADS NOT EXCEEDING THE MAXIMUM CAPACITIES; OR THAT NUMBER OF PILES REQUIRED BY SPACING CONSIDERATIONS, MINIMUM NUMBER OF PILES IN A GROUP, ETC.

FRICTION PILE

THE "DESIGN BEARING" FOR FRICTION PILE USED IN PILE TABLES ON PLANS SHALL NOT FALL BELOW THE MINIMUM (*) OR EXCEED THE MAXIMUM CAPACITIES SHOWN IN THE "PILE CAPACITIES" TABLE (**). THE LOAD ON A FRICTION PILE MAY BE LESS THAN THE MINIMUM CAPACITY SHOWN, BUT TENSION ON A PILE WILL NOT BE PERMITTED.

(*) IF THE "DESIGN BEARING" FOR FRICTION PILES FALLS BELOW THE MINIMUM, SHOW THE MINIMUM VALUE (SHOWN BELOW) ON THE FRONT SHEET OF PLANS.

(**) UNLESS A HIGHER LOAD IS INDICATED ON THE DESIGN LAYOUT SHEET. HIGHER VALUES FOR FRICTION PILES MAY BE ESTABLISHED BY LOAD TESTS.

POINT BEARING PILE

"DESIGN BEARING" FOR POINT BEARING PILES WHICH ARE TO BE DRIVEN TO ROCK OR OTHER POINT BEARING MATERIAL SHALL BE DESIGNED FOR 9000 PSI, UNLESS THE DESIGN LAYOUT SPECIFIES OTHERWISE. SEE THE "PILES CAPACITIES" TABLE.

PILE CAPACITIES
(TONS)

TYPE (STEEL)	AREA (IN.^{2})	POINT BEARING (PSI) 6,000	9,000	12,000
HP10 X 42	12.35	37	56	74
HP12 X 53	15.58	47	70	94
HP14 X 73	21.46	65	97	129

TYPE	CAPACITY (MAX.)	(MIN.)	STANDARD
PRECAST (16") AND PRESTRESS	32	20	SURVEYS AND PLANS STD. 702.01
CIP (14")	30	20	SURVEYS AND PLANS STD. 702.02
TIMBER (12")	24	16	NONE
TIMBER (15")	30	20	NONE

PILE CAPACITY

SEISMIC PERFORMANCE CATEGORY B,C & D

DESIGN BEARING

"DESIGN BEARING" IS THE ACTUAL COMPUTED LOAD ON A PILE DUE TO ALL DEAD AND LIVE LOADS AND OTHER APPLICABLE FORCES WHICH MAY ACT ON THE STRUCTURE. THIS LOAD SHALL BE THAT PRODUCED BY USING THE MINIMUM NUMBER OF PILES WHICH GIVE LOADS NOT EXCEEDING THE MAXIMUM CAPACITIES; OR THAT NUMBER OF PILES REQUIRED BY SPACING CONSIDERATIONS, MINIMUM NUMBER OF PILES IN A GROUP, ETC.

FRICTION PILE

THE "DESIGN BEARING" FOR FRICTION PILE USED IN PILE TABLES ON PLANS SHALL NOT FALL BELOW THE MINIMUM (*) OR EXCEED THE MAXIMUM CAPACITIES SHOWN IN THE "PILE CAPACITIES" TABLE (**). THE LOAD ON A FRICTION PILE MAY BE LESS THAN THE MINIMUM CAPACITY SHOWN, BUT TENSION ON A PILE WILL NOT BE PERMITTED FOR A.A.S.H.T.O. GROUP I THRU VI LOADS. FOR EARTHQUAKE LOADS ONLY THE MINIMUM LOAD ON A PILE SHALL BE THE ALLOWABLE UPLIFT FORCE SPECIFIED FOR PILES IN BRIDGE MANUAL SECTION 3.71 UNDER SEAL COURSE DESIGN.

(*) IF THE "DESIGN BEARING" FOR FRICTION PILES FALLS BELOW THE MINIMUM, SHOW THE MINIMUM VALUE (SHOWN BELOW) ON THE FRONT SHEET OF PLANS.

(**) UNLESS A HIGHER LOAD IS INDICATED ON THE DESIGN LAYOUT SHEET. HIGHER VALUES FOR FRICTION PILES MAY BE ESTABLISHED BY LOAD TESTS.

POINT BEARING PILE

1.) A.A.S.H.T.O. GROUP I THRU VI LOADS AS APPLICABLE

"DESIGN BEARING" FOR POINT BEARING PILES WHICH ARE TO BE DRIVEN TO ROCK OR OTHER POINT BEARING MATERIAL SHALL BE DESIGNED FOR 9000 PSI, UNLESS THE DESIGN LAYOUT SPECIFIES OTHERWISE. SEE THE "PILES CAPACITIES" TABLE.

PILE CAPACITIES
(TONS)

TYPE (STEEL)	AREA (IN.^{2})	POINT BEARING (PSI) 6,000	9,000	12,000
HP10 X 42	12.35	37	56	74
HP12 X 53	15.58	47	70	94
HP14 X 73	21.46	65	97	129

TYPE	CAPACITY (MAX.)	(MIN.)	STANDARD
PRECAST (16") AND PRESTRESS	32	20	SURVEYS AND PLANS STD. 702.01
CIP (14")	30	20	SURVEYS AND PLANS STD. 702.02
CIP (20")	40	20	SEE SPECIAL BRIDGE
CIP (24")	48	30	STANDARD LIBRARY DETAIL
TIMBER (12")	24	16	NONE
TIMBER (15")	30	20	NONE

2.) EARTHQUAKE LOADS
MAXIMUM PILE LOAD

UNDER EARTHQUAKE LOADING CONDITIONS ONLY, THE ULTIMATE CAPACITIES FOR STEEL POINT BEARING PILES IS TWO TIMES THE VALUE SHOWN IN THE ABOVE TABLE. FOR FRICTION PILE THE ULTIMATE CAPACITY UNDER EARTHQUAKE LOADING IS 1.5 TIMES THE VALUES IN THE ABOVE TABLES.

NOTE: SEE GENERAL NOTES SECTION FOR THE PROPER METHOD FOR SHOWING THE DESIGN BEARING VALUES ON THE PLANS.

REVISED: NOV. 1991

GENERAL PILE DATA

ACCURACY REQUIRED

ALL CAPACITIES SHALL BE TAKEN TO THE NEAREST 1 (ONE) TON. LOADS SHOWN ON PLANS SHALL NOT INCLUDE OVERSTRESS PERCENTAGES FOR WIND, TEMPERATURE, ETC.

MAXIMUM SPECIFIED PILE LENGTHS

STEEL.....NO LIMIT
CAST-IN-PLACE....NO LIMIT
PRECAST.....60'
TIMBER.....50'

TEST PILE

LENGTH SHALL BE PILE LENGTH SPECIFIED + 10'.

WHEN TEST PILES ARE SPECIFIED TO BE DRIVEN-IN-PLACE THEY SHALL NOT BE INCLUDED IN THE NUMBER OF PILES INDICATED IN THE "PILE DATA" TABLE.

PRECAST AND PRESTRESSED PILES

WHEN PRECAST PILES ARE SPECIFIED, THE USE OF PRESTRESSED PILES AS AN ALTERNATE WILL AUTOMATICALLY BE PROVIDED BY THE PILE STANDARD.

TIMBER PILE

WHEN 15" TIMBER PILES ARE SPECIFIED AS AN ALTERNATE TO CAST-IN-PLACE CONCRETE PILES, THEY MAY BE USED FOR FOUNDATION PILES UNDER THE INTERMEDIATE BENTS. THEY SHALL NOT BE USED UNDER PILE CAP END BENTS.

LOAD TEST PILE

WHEN LOAD TEST PILE ARE SPECIFIED, THE BEARING VALUE SHALL BE DETERMINED BY AN ACTUAL LOAD TEST IN ACCORDANCE WITH MISSOURI STD. SPEC. 702.4.9.

STEEL PILE

ALL STEEL IN STEEL PILING SHALL BE A36 UNLESS EARTHQUAKE DESIGN REQUIRES A572 (50 KSI) STEEL FOR BENDING STRESSES.

NOTE: FOR PREBORING FOR PILES SEE SECTIONS 702.4.3 AND 702.6.6 OF THE STANDARD SPECIFICATIONS.

PRECAST CONCRETE PILE

The details of precast concrete piles will be as indicated on Survey and Plans Drawing - 702.01. When precast piles are specified, the use of prestressed piles as an alternate will automatically be provided for by the pile standard.

Indicate hammer energy in "PILE DATA" table (nearest 100 ft-lbs) on the Design Plans.

Minimum hammer energy is 8,000 ft-lbs.

PILE LENGTH (ft)	OCTAGONAL CONSTANT SECTION Wt. (lbs)	OCTAGONAL TAPERED Wt. (lbs)
20	4,100	3,700
30	6,300	5,000
40	8,500	6,100
50	10,700	8,300
60	12,900	10,500

Energy required = 1wL
L = Length of pile
w = Wt. per ft. of pile

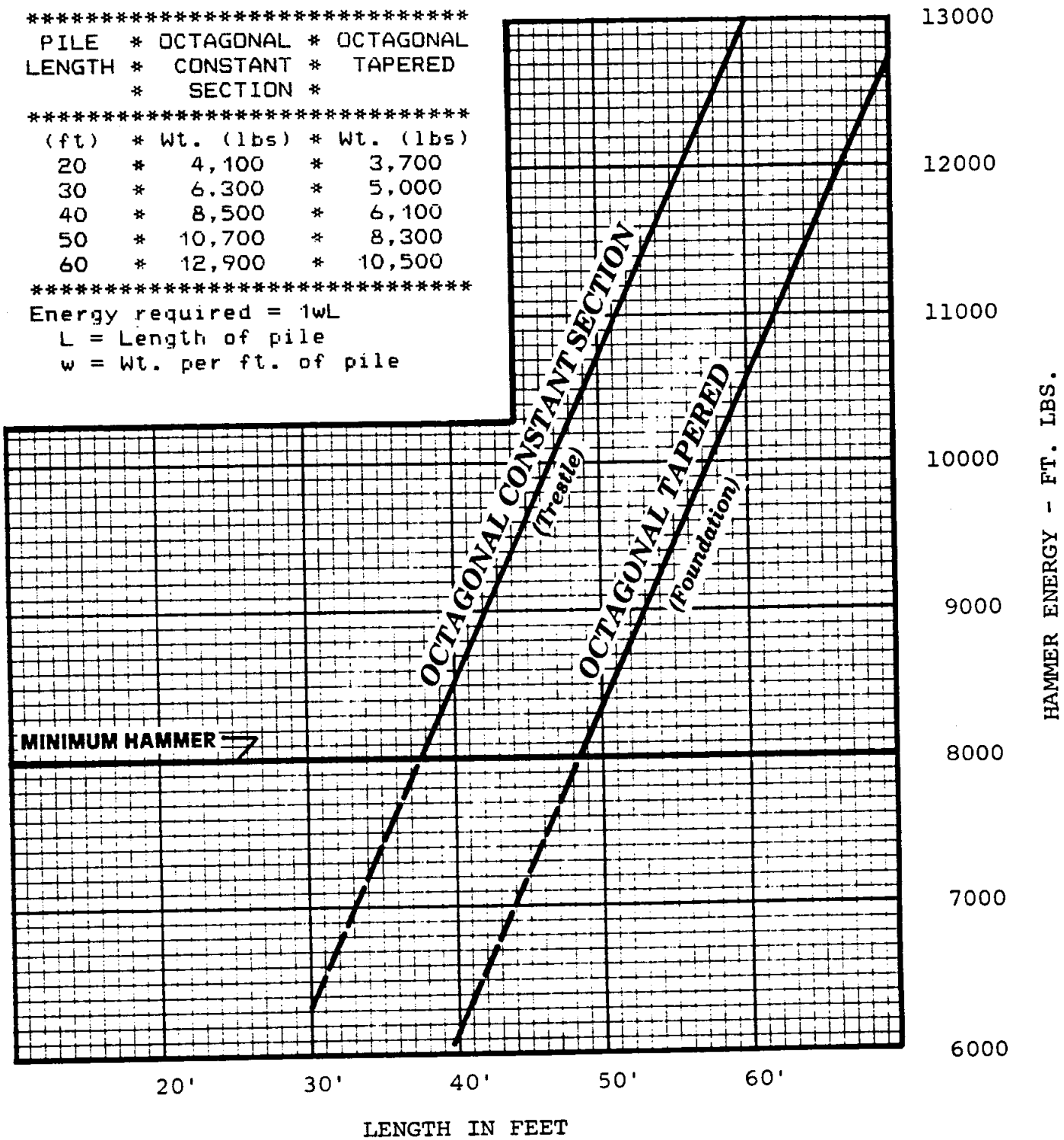

CAST-IN-PLACE CONCRETE PILE

DETAILS - MISCELLANEOUS

THE DETAILS OF CAST-IN-PLACE PILES WILL BE INDICATED ON SURVEYS AND PLANS STD. DRAWING 702.02, EXCEPT THAT THE SHELL AND LOCATION TYPE MUST BE INDICATED ON THE DESIGN PLANS AS SPECIFIED ON THE DESIGN LAYOUT.

THE KIND AND TYPE OF CAST-IN-PLACE PILES SHALL BE INDICATED IN THE "PILE DATA" TABLE ON THE DESIGN PLANS.

THE KIND OF PILE WILL BE SPECIFIED ON THE DESIGN LAYOUT.

THE TYPE OF PILE, TRESTLE OR FOUNDATION, MAY BE SELECTED FROM THE ILLUSTRATIONS SHOWN BELOW. WHEN THE ILLUSTRATIONS INDICATE THAT THERE WOULD BE BOTH TRESTLE AND FOUNDATION PILES ON THE SAME STRUCTURE, USE ALL PILES AS TRESTLE PILES THROUGHOUT THE STRUCTURE REGARDLESS OF THE TYPE OF BENT.

THE SHELL, THICK OR THIN, WILL NOT BE INDICATED IN THE "PILE DATA" TABLE UNLESS SPECIFIED ON THE DESIGN LAYOUT.

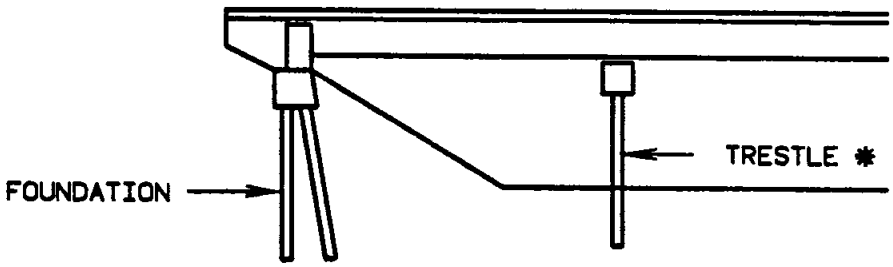

STREAM CROSSING

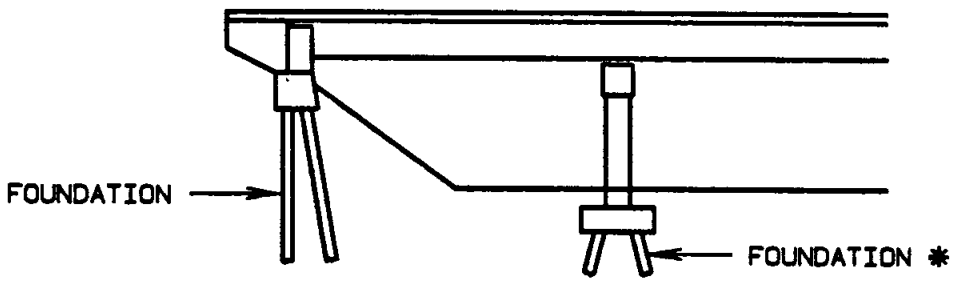

STREAM CROSSING

NOTE:

* FOR SEISMIC CATEGORIES B, C & D SEE SHEETS NO. 1.2.4 1.2.5.

USE THICK SHELLS ONLY.

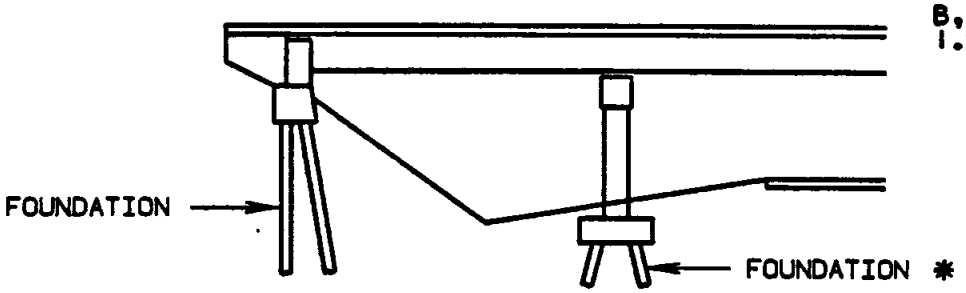

GRADE SEPARATION

CAST-IN-PLACE CONCRETE PILE

(No Mandrel)

TIMBER PILE & TRESTLE OR FOUNDATION PILES

THE MAXIMUM LENGTH OF TIMBER PILES ALLOWED IS 50 FEET.

INDICATE HAMMER ENERGY IN "PILE DATA" TABLE (NEARST 100 FT-LBS) ON THE DESIGN PLANS.

MINIMUM HAMMER ENERGY IS 8000 FT-LBS.

HAMMER ENERGY

PILE LENGTH (FT)	14" CIP TRESTLE (FT. LBS)	14" CIP FOUNDATION (FT. LBS)
20	2220	1680
40	4440	3360
60	6660	5040
80	8880	6720
100	11100	8400
120	13320	10080

ENERGY REQUIRED = 3WL (FT-LBS)
W = WT. PER FT. OF PILE
L = LENGTH OF PILE

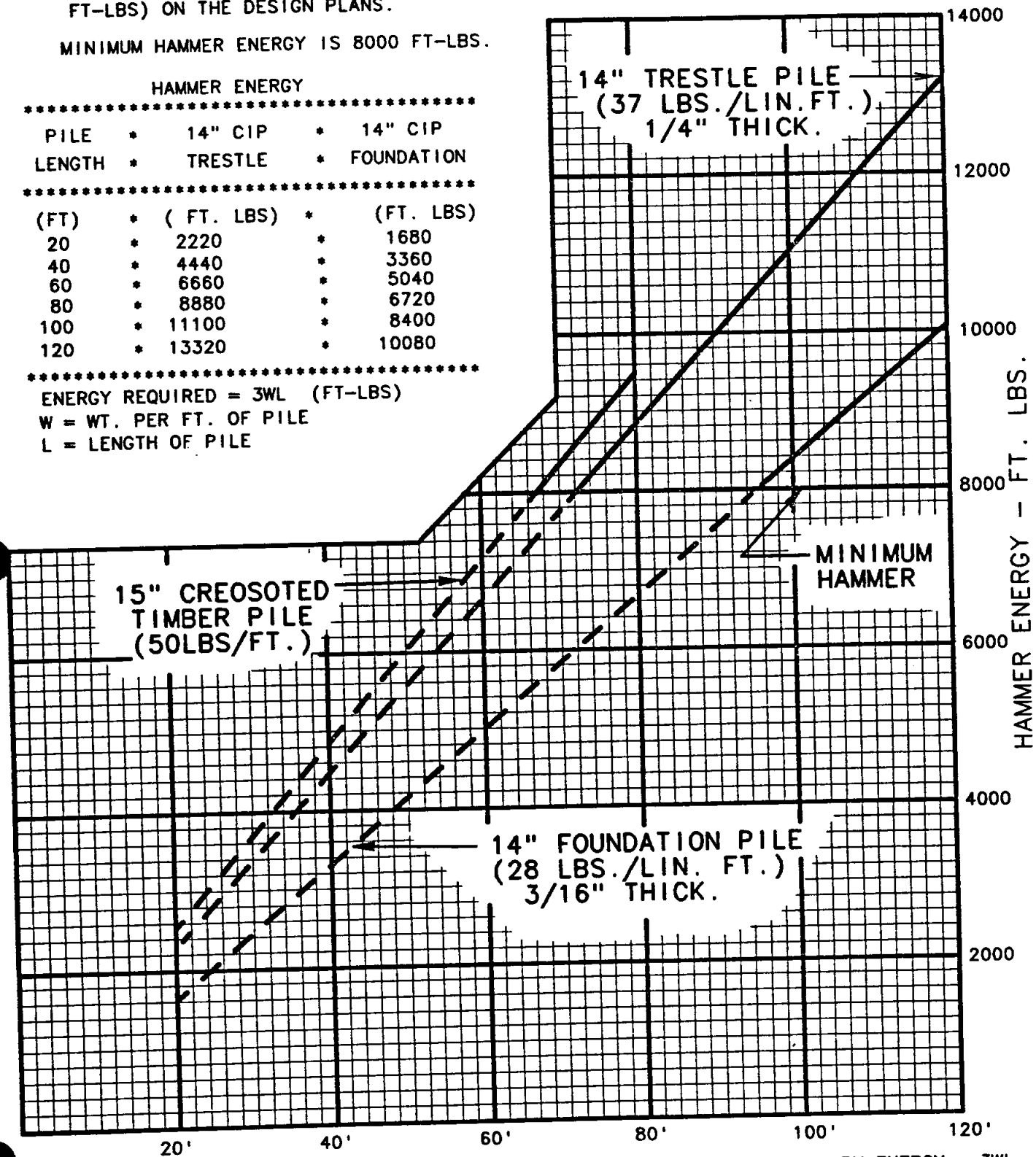

NOTE: DETERMINE HAMMER ENERGY FOR 20 INCH AND 24 INCH CIP PILE BY ENERGY = 3WL.

REVISED: OCT. 1992

CAST-IN-PLACE CONCRETE PILE

(No Mandrel)

TRESTLE PILES

INDICATE HAMMER ENERGY IN "PILE DATA" TABLE (NEARST 100 FT-LBS) ON THE DESIGN PLANS.

MINIMUM HAMMER ENERGY IS 8000 FT-LBS.

HAMMER ENERGY

PILE LENGTH	20"CIP TRESTLE	24" CIP TRESTLE
(FT)	FT-LBS	FT-LBS
20	4800	7680
40	9600	15360
60	14400	23040
80	19200	30720
100	24000	38400
120	28800	46080

ENERGY REQUIRED = 3WL (FT-LBS)
W = WT. PER FT. OF PILE
L = LENGTH OF PILE

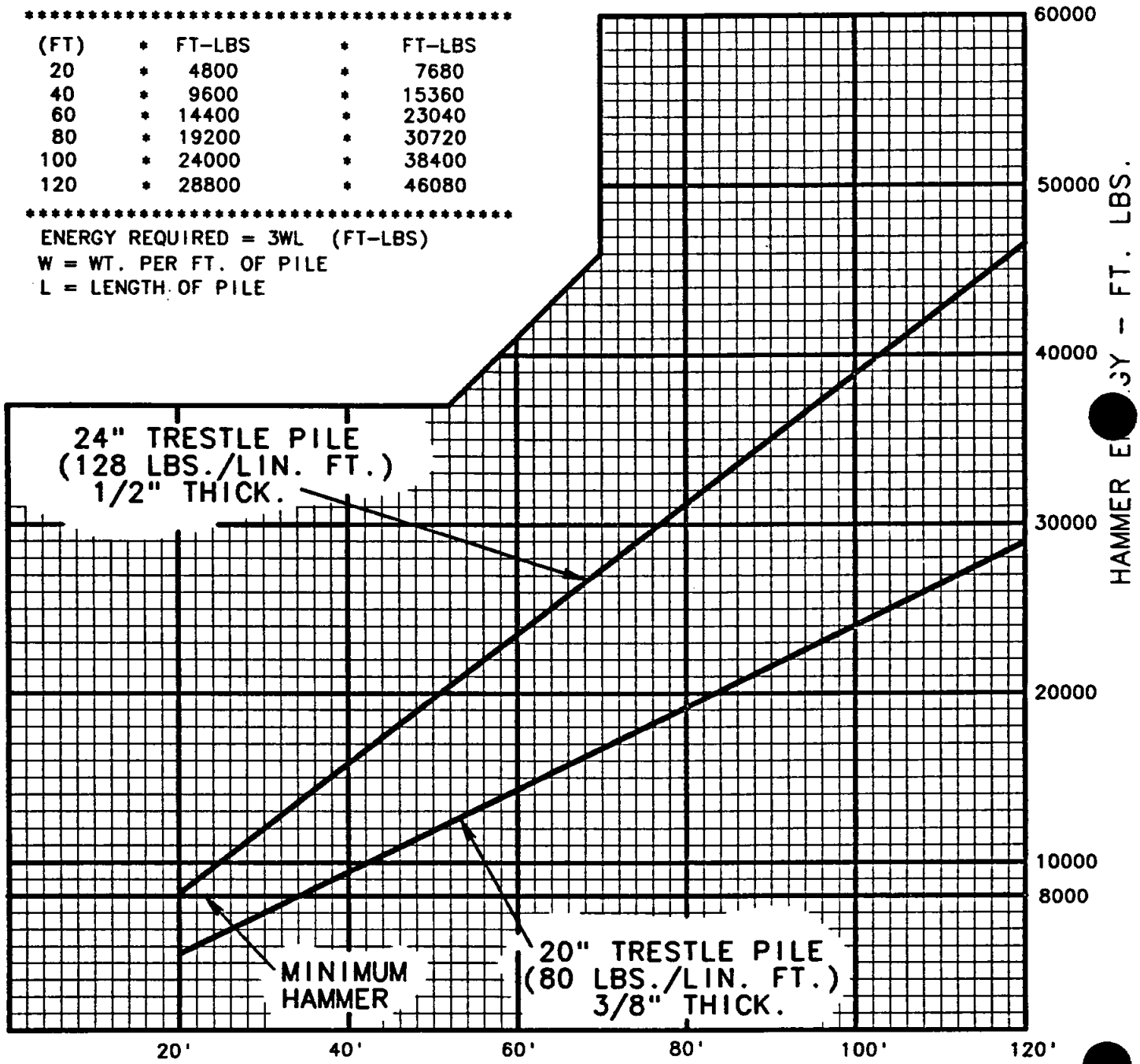

NOTE: DETERMINE HAMMER ENERGY FOR 20 INCH AND 24 INCH CIP PILE BY ENERGY = 3WL.

CAST-IN-PLACE CONCRETE PILE IN SEISMIC PERFORMANCE CATEGORIES B, C & D (*)

14" CIP piles shall be used whenever possible.
20" and 24" CIP piles may be used in categories C & D when necessary.

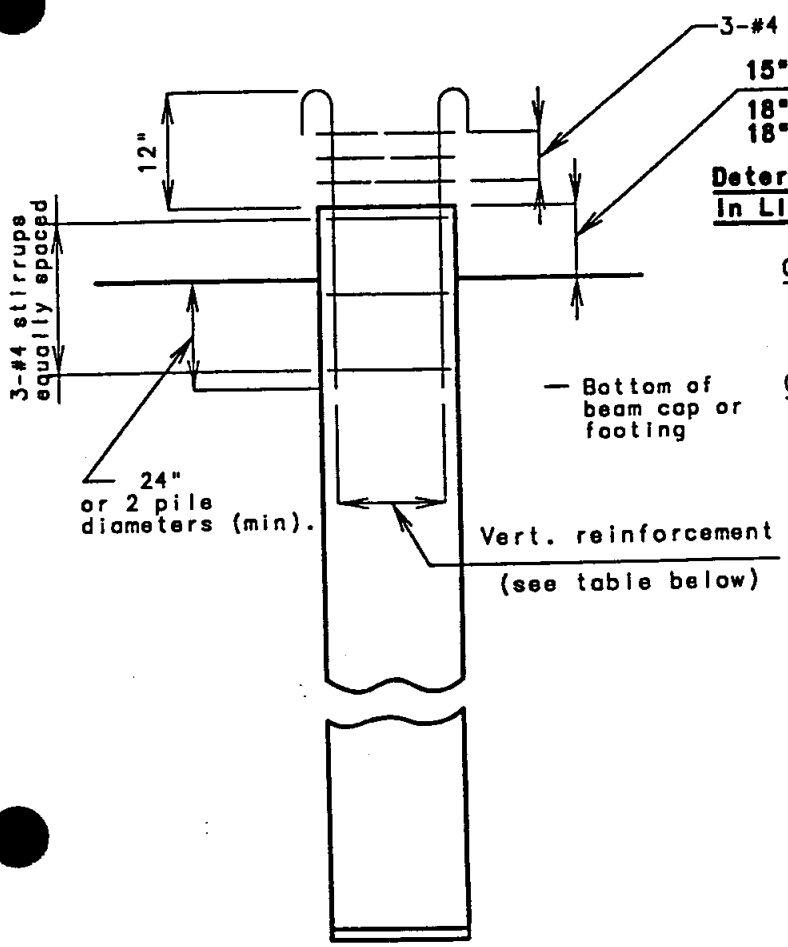

TYPICAL CAST-IN-PLACE PILE

15" Pile Cap Intermediate Bent

18" Pile Cap End Bent
18" Pile Footing

Determination of Seismic Moments in Piles in Liquefaction Areas

CIP Concrete Piles in Footings

Determine Moment as $M = P_R L_2/2$.

CIP Concrete Pile Cap Intermediate Bents

Category B (Good Soil Only, see bridge manual section 1.2 Page 7.1.6)

Determine Longitudinal Moment as $M = P_L L$.

Determine Transverse Moment as $M = P_T L_1/2$.

Categories C & D

See Bridge Manual Section 1.2 page 7.5.7 for example of moment calculation in seismic categories C and D.

Definition of Variables

P_L = Longitudinal lateral load per pile.

P_T = Transverse lateral load per pile.

P_R = Resultant of longitudinal & transverse lateral load per pile.

L = Distance from point of fixity to top of beam cap.

L_1 = Distance from point of fixity to ℄ of beam cap.

L_2 = Distance from point of fixity to bottom of footing.

K = Effective length factor

Note: Use max. $\frac{KL}{R} = 120$

Permissible Pile Size in Seismic Zones

Pile Size (o.d.)	Nominal Thickness (in.)	Design Thickness (in.)	Vertical Reinforcement(**) (min.)
14"	.250	.156	6-#5's
20"	.375	.266	8-#6's
24"	.500	.375	12-#6's

Note: Design thickness is the nominal thickness less 12.5% for fabrication tolerance less 1/16" for corrosion. (A.A.S.H.T.O. 4.5.74, ASTM A-572)

(**) See A.A.S.H.T.O. Standard Specification for Seismic Design of Highway Bridges 6.4 and 6.3.1 (c).

Note:
Specify trestle type only and check induced seismic moment at point of fixity.

(*) Friction piles in seismic performance categories B, C & D shall be cast-in-place steel pipe pile only.

REVISED: June 1996

Note: All concrete for cast-in-place piles shall be Class B1.

Welded or seamless steel pipes shall meet the requirements of A.S.T.M. specification A-252, Grade 2 or 3, and the 3/4" closure plates shall meet the requirements of AASHTO M183.

Grade 2 Fy = 35,000 psi.
Grade 3 Fy = 45,000 psi.

Where 3/4" closure plates are required for tips of pipe piles they shall not project beyond the outside diameter of the pipe piles. Satisfactory weldments may be made by beveling tip ends of pipe or by use of inside backing rings. In either case proper gaps shall be used to obtain weld penetration full thickness of pipe.

Splice details for cast-in-place concrete piles shall be in accordance with the manufacturers recommendations.

All splices of shells for cast-in-place concrete piles shall be made watertight and to the full strength of the shell above and below the splice to permit hard driving without damage. All shells damaged during driving shall be replaced without cost to the State. Shell sections used for splicing shall be at least 5'-0" in length.

Waterjetting permitted with 24" or 20" piles.

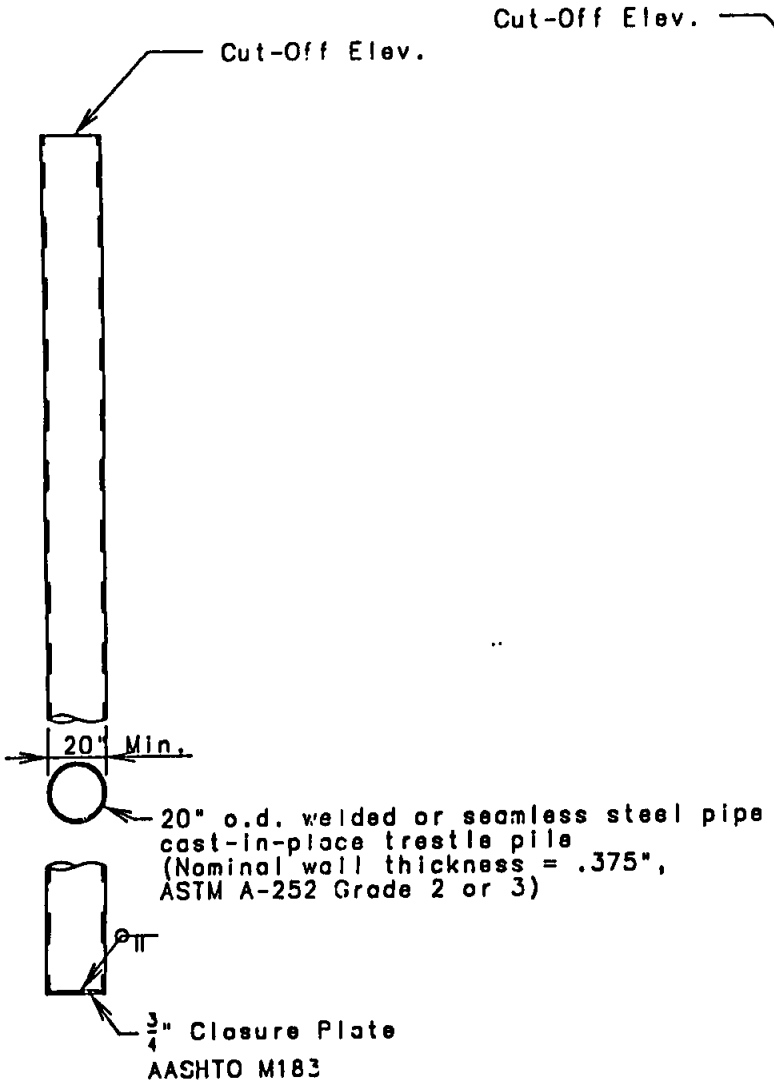

WELDED OR SEAMLESS STEEL PIPE
CAST -IN-PLACE PILE

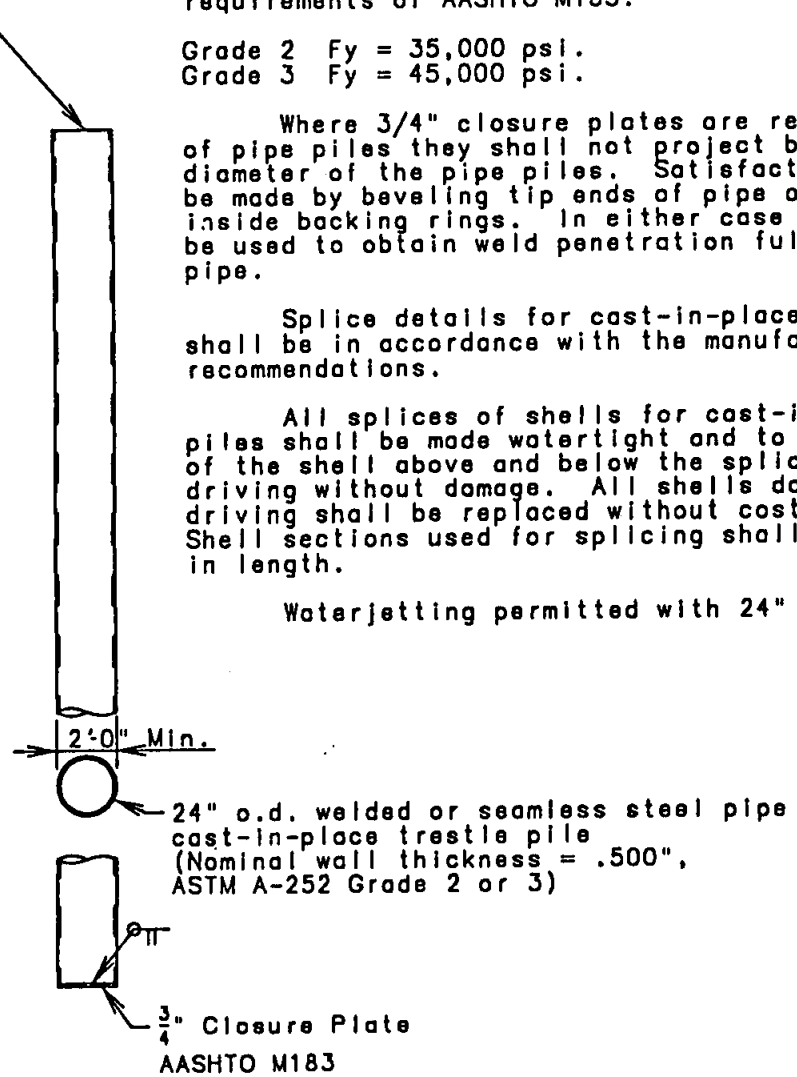

WELDED OR SEAMLESS STEEL PIPE
CAST -PLACE PILE

STEEL PILE

SIZE

Steel bearing piles of the following Sections may be used:

SECTION	AREA
HP 10 x 42	12.35 sq. in.
HP 12 x 53	15.58 sq. in.
HP 14 x 73	21.46 sq. in.

The HP 10 x 42 Section should generally be used unless a heavier section produces a more economical design. For an economic comparison, use a price of $27 per lineal foot for 10" piles and $30 per lineal foot for 12" piles. The same size pile must be used for all footings on the same bent. Pile size may vary from bent to bent.

CAPACITY

The pile indicated shall be designed for 9,000 psi point bearing, unless the Design Layout specifies otherwise. When a very large number of heavily loaded piles is required, the use of 12,000 psi point bearing with a pile loading test may be indicated. Consult the Chief Designer.

PILE TIPS

Pile tip reinforcement shall be used if specified on the Design Layout.

HAMMER ENERGY

In calculating the required hammer energy, check the charts indicated below and enter the larger value in the "PILE DATA" table on the Design Plans.

STEEL BEARING CHART
(Hammer energy based on pile length.)

STEEL BEARING CHART
(Hammer energy based on "Design Bearing".)
(Vertical and Battered Pile)

If the required batter differs from that indicated, (2" per 12") and (3" per 12"), on the chart, see the Missouri Standard Specifications.

"Hammer Energy Required" shall not be given on Plans above a maximum value of 24,000 ft-lbs.

Whenever the piling situation results in a value over a preferable maximum of 22,000 ft-lbs, a redesign shall be made for a greater number of piles so as to hold the value to around 22,000 ft-lbs. A value of 24,000 ft-lbs will be permitted for only very special situations where numbers of piles are limited by construction clearances or other circumstances.

STEEL BEARING PILE

(Hammer energy based on pile length.)

Indicate hammer energy in "PILE DATA" table (nearest 100 ft-lbs) on the Design Plans.

Minimum hammer energy is 7,000 ft-lbs.

Energy required = 3wL
w = Wt. per ft. of pile
L = Length of pile

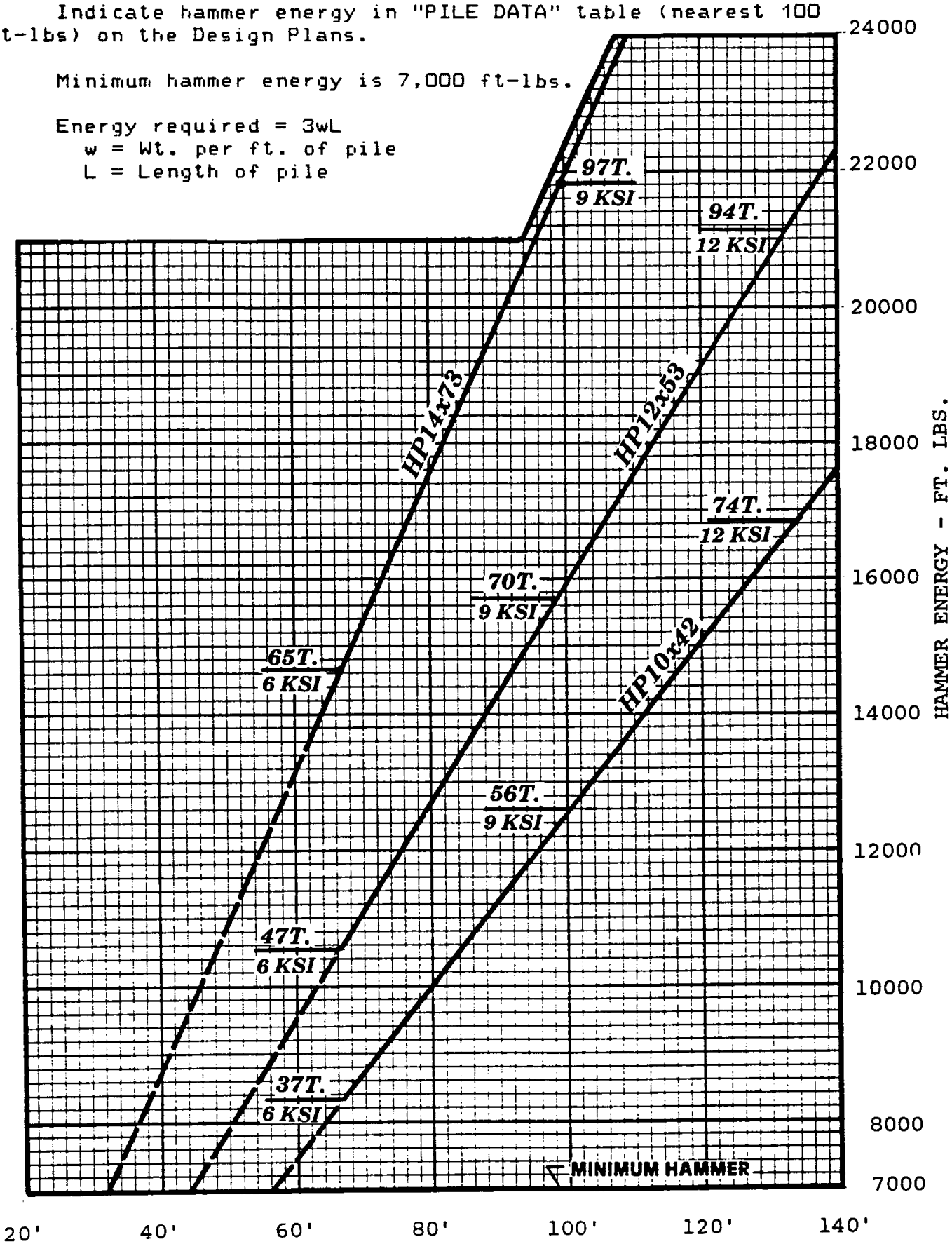

STEEL BEARING PILE

(Hammer energy based on "Design Bearing".)
(See Missouri Standard Specifications - 702.4.10.)

Indicate hammer energy in "PILE DATA" table (nearest 100 ft-lbs) on the Design Plans.

Minimum hammer energy is 7,000 ft-lbs.

Energy required = 225 x bearing value

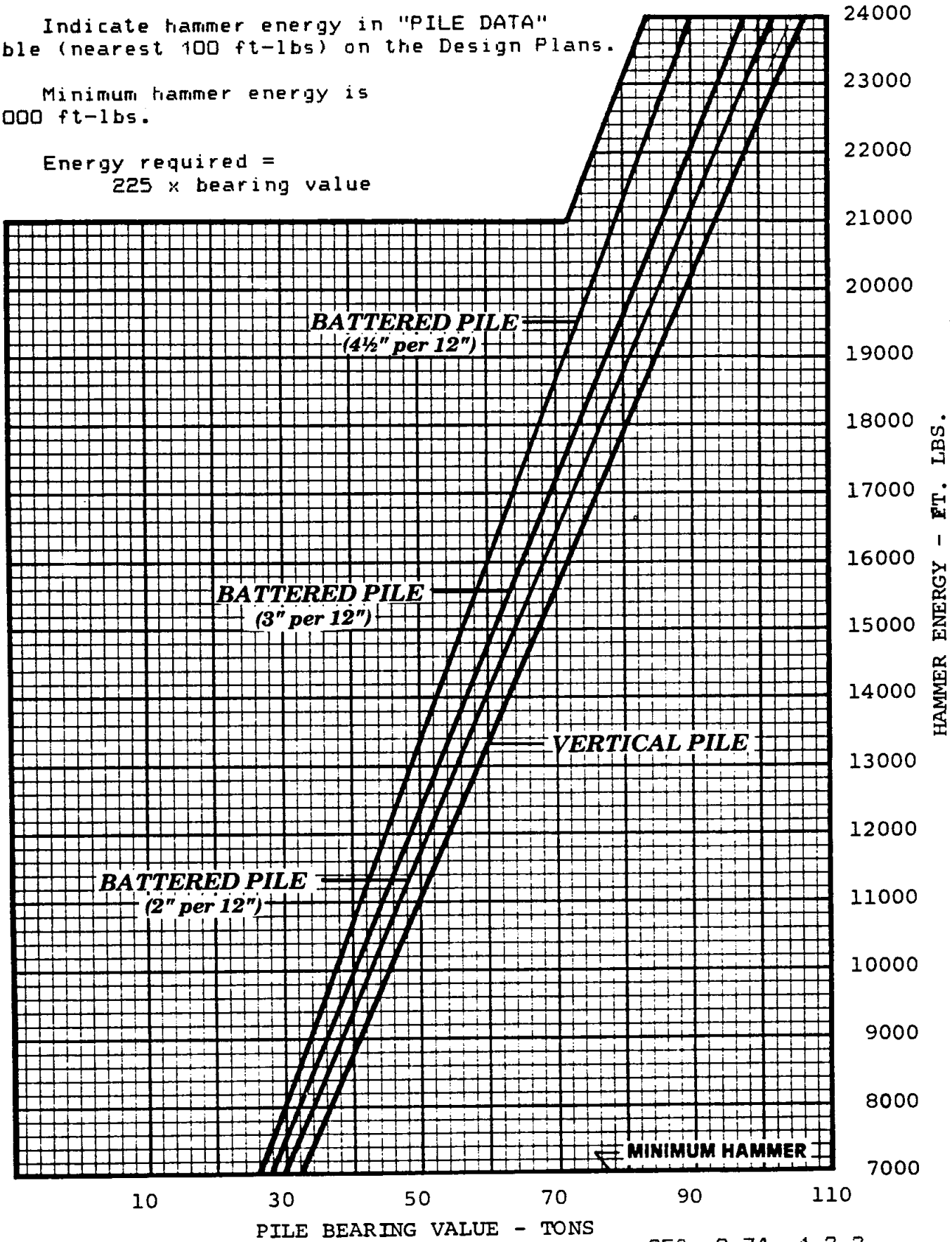

TIMBER PILES

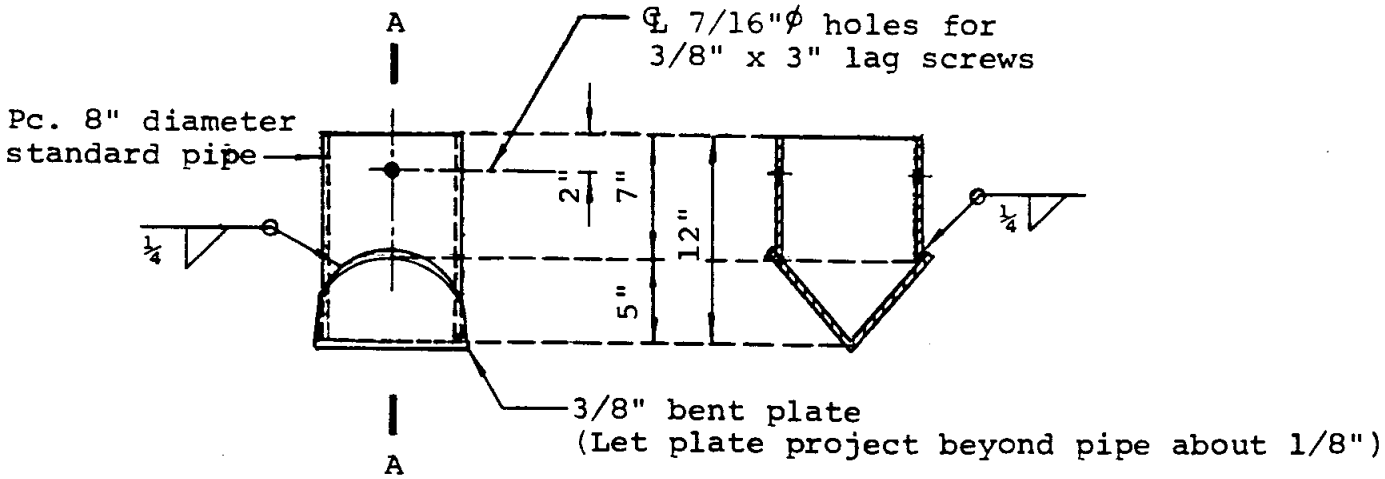

Note: See Missouri Std. Spec. 702.2.6 and 1050.7

SECTION A-A

DETAILS OF PILE SHOE

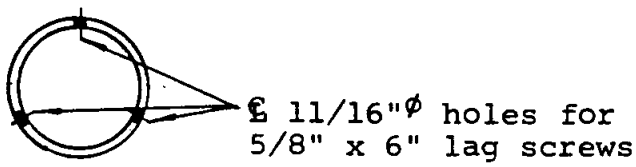

PLAN

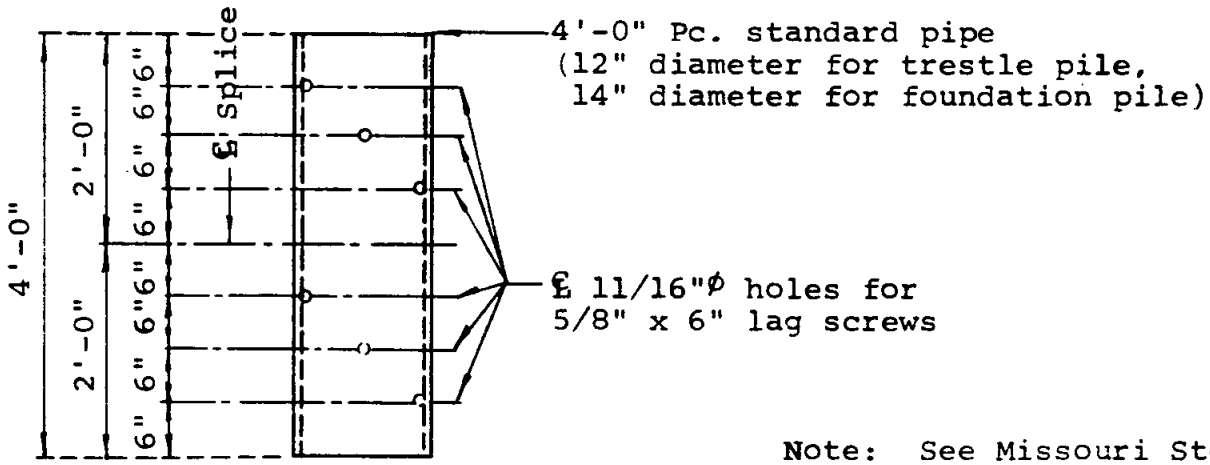

Note: See Missouri Std. Spec. 702.4.5.3

ELEVATION

DETAILS OF PILE SPLICE

STEEL PILES

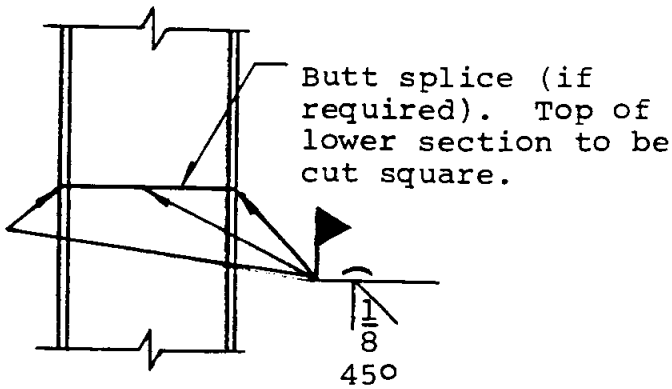

DETAIL OF STEEL PILE SPLICE

CONCRETE PILES
PRECAST
(702.01)

TABLE OF PILE DATA

OCTAGONAL CONSTANT SECTION				OCTAGONAL TAPERED			
Length of Piling	Long Bars	Pick up		Length of Piling	Long Bars	Pick up	
8'-0" to 26'-0" incl	8 #6	2'-0"	0	5'-0" to 25'-0" incl	8 #6	2'-0"	0
27'-0" to 36'-0" incl	8 #6	1	0	26'-0" to 37'-0" incl	8 #6	1	0
37'-0" to 41'-0" incl	8 #6	1	0	38'-0" to 40'-0" incl	8 #6	1	0
42'-0" to 48'-0" incl	8 #7	1	0	41'-0"	8 #6	0'-6"	0
49'-0" to 57'-0" incl	8 #8	1	0	42'-0"	8 #6	1'-0"	0
58'-0" to 59'-0"	8 #8	1'-0"	0	43'-0"	8 #6	1'-6"	0
60'-0"	8 #8	2'-0"	0	44'-0"	8 #6	2'-0"	0
31'-0" to 33'-0"	8 #8	0'-6"	0	45'-0"	8 #7	2'-6"	0
33'-0" to 36'-0" incl	8 #8	1'-0"	0'-6"	46'-0"	8 #7	0'-6"	0
37'-0" to 39'-0" incl	8 #8	1'-0"	1'-0"	47'-0"	8 #7	0'-9"	0
60'-0"	8 #8	1'-0"	1'-6"	48'-0"	8 #7	1'-3"	0
				49'-0"	8 #7	1'-6"	0
				50'-0"	8 #8	1'-9"	0
				51'-0"	8 #8	2'-0"	0
				52'-0" to 57'-0" incl	8 #8	1'-6"	0'-6"
				58'-0" to 60'-0" incl	8 #8	1'-0"	0'-0"

POINTS OF SUPPORT FOR HANDLING

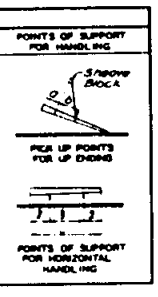

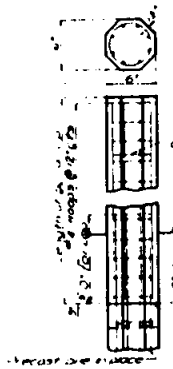

COMBINATION PILE BUILD UP WITH PRECAST PILE (WITHOUT DRIVING)
(Trestles)

PILE LENGTH	OCTAGONAL CONSTANT SECTION	OCTAGONAL TAPERED
(Ft)	Wt (Lbs)	Wt (Lbs)
20	4,100	3,700
30	6,300	5,000
40	8,500	6,100
50	10,700	8,500
60	12,900	10,200

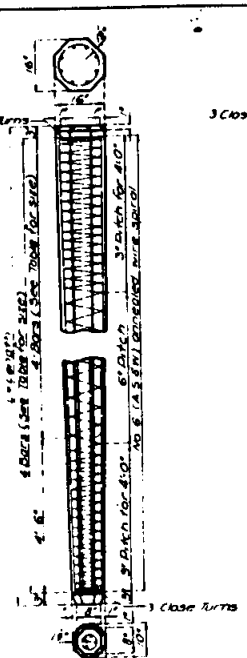

STANDARD OCTAGONAL TAPERED PRECAST PILE
(Foundations)

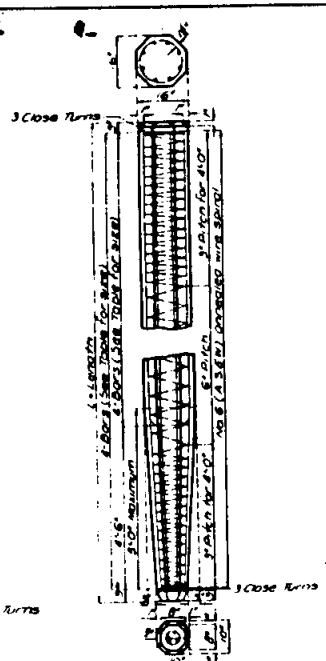

STANDARD OCTAGONAL CONSTANT SECTION PRECAST PILE
(Trestles)

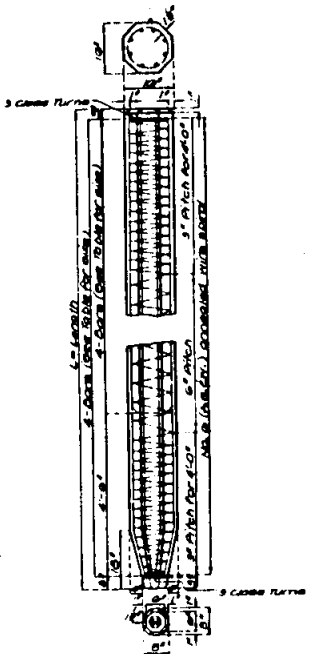

STANDARD OCTAGONAL CONSTANT SECTION PRECAST PILE WITH ALTERNATE TIP

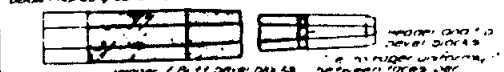

FORMS SUITABLE FOR ALL LENGTHS & COMBINATIONS OF OCTAGONAL PILES

Note: To standardize and simplify forming octagonal tapered piles a standard taper ¼" between faces per foot of length may be used for all lengths up to and including 40'-0". All these piles shall have a 6" octagonal butt and this butt shall be extended as a 6" octagonal constant section for lengths over 40'-0". This will permit using the same forms for casting piles of any length with as in all cases longer than the minimum allowed. These same forms may also be used for casting the combination pile columns type suitable for trestles.

GENERAL NOTES

[illegible] Concrete shall be Class A1 with Gradation E Aggregate.

[illegible] Constant Section piling of [illegible] may be used as trestle piles [illegible] shall be used as follows: [illegible] shown on sheets [illegible] shall be used [illegible] shall be used.

CONVERSION FACTORS OR EQUIVALENTS

[illegible]	[illegible]	[illegible]	[illegible]

MISSOURI HIGHWAY AND TRANSPORTATION COMMISSION

16" CONCRETE PILES
(APPROVED PRECAST TYPES)

REVISED AUGUST 1981

DRAWING 702.01E
SHEET 1 of 2

CONCRETE PILES
PRESTRESSED
(702.01)

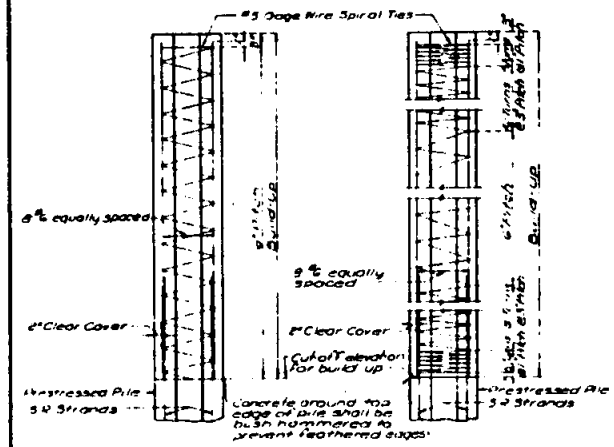

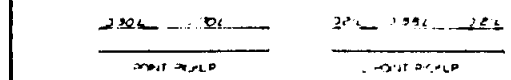

Note: unless special lifting devices are attached for pick up, pick up points shall be plainly marked on all piles after removal of the forms and all lifting shall be done at these points.
The length "L" is the distance end to end of pile, including pile tip.
The Maximum Length "L" for 1 Point Pick-Up is 56 ft
The Maximum Length "L" for 2 Point Pick-Up is 78 ft

GENERAL NOTES:

All concrete shall be Class A1 with gradations of aggregate having a design strength of 5,000 psi in compression at 28 days.

Prestressing reinforcement shall consist of eleven seven-wire stress relieved strands conforming to the requirements of AASHTO M 203, Grade 270. Total initial tension in strands before release shall be 207,900 pounds.

Spiral reinforcement shall be plain reinforcing bars or cold drawn wire. Reinforcement for build-ups other than the spirals shall meet requirements of Standard Specifications.

Structural steel for pile tips shall be structural carbon steel AASHTO M 183 or other approved steel.

Strands shall be de-tensioned one at a time, keeping strands in tension as nearly as practicable symmetrical about the axis of pile.

Piles may be removed from the bed at any time after stress transfer.

Sections of prestressed concrete piles shall not be spliced together but build-ups may be used as follows. Where no additional driving is required, either of the build ups (without driving) shown on Sheets 1 or 2 may be used. If additional driving is required, the build-up (with driving) shown on sheet 2 shall be used.

ALTERNATE PILE HEADS:

Method of attachment of a pile to build-up may be by any of the following methods:

1. Allow all strands to project a minimum of 2'-0" or cut off at least 3'-0" of pile and expose a minimum of 2'-0" of strands.
2. Cast 8 bars (equally spaced) into pile head. Use #6 bars for build-up without driving and #8 bars for build-up with driving. All bars shall extend into pile head and project from pile head a minimum of 32 diameters.
3. Drill 8 holes in pile head (equally spaced) for installation of 8 grouted dowel bars of same size and length as in 2.
4. Provide cored holes for bars as in 3.

If build-up under any alternate is required on trestle pile it shall be located so as to extend at least 18" below finished ground line.

No bars or strands are to extend from head of pile or build-up into footing or pile cap.

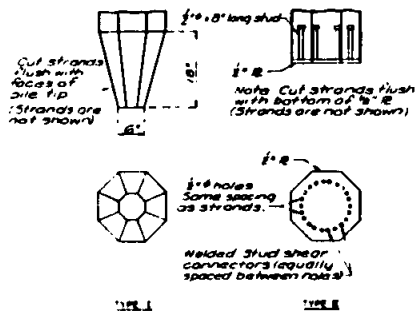

ALTERNATE PILE TIPS

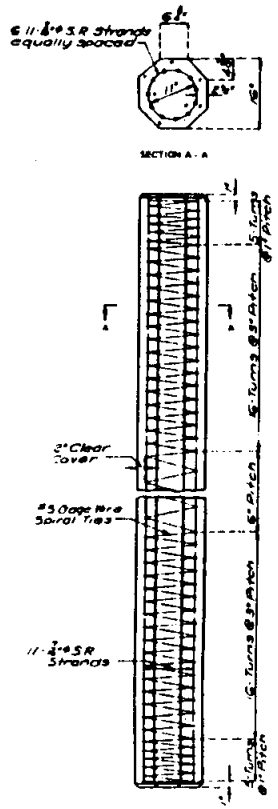

CONVERSION FACTORS AND EQUIVALENTS	
[illegible]	[illegible]

MISSOURI HIGHWAY AND TRANSPORTATION COMMISSION

16" CONCRETE PILES
(APPROVED PRESTRESSED TYPES)

REVISED AUGUST 1981

DRAWING 702.01E
SHEET 2 of 2

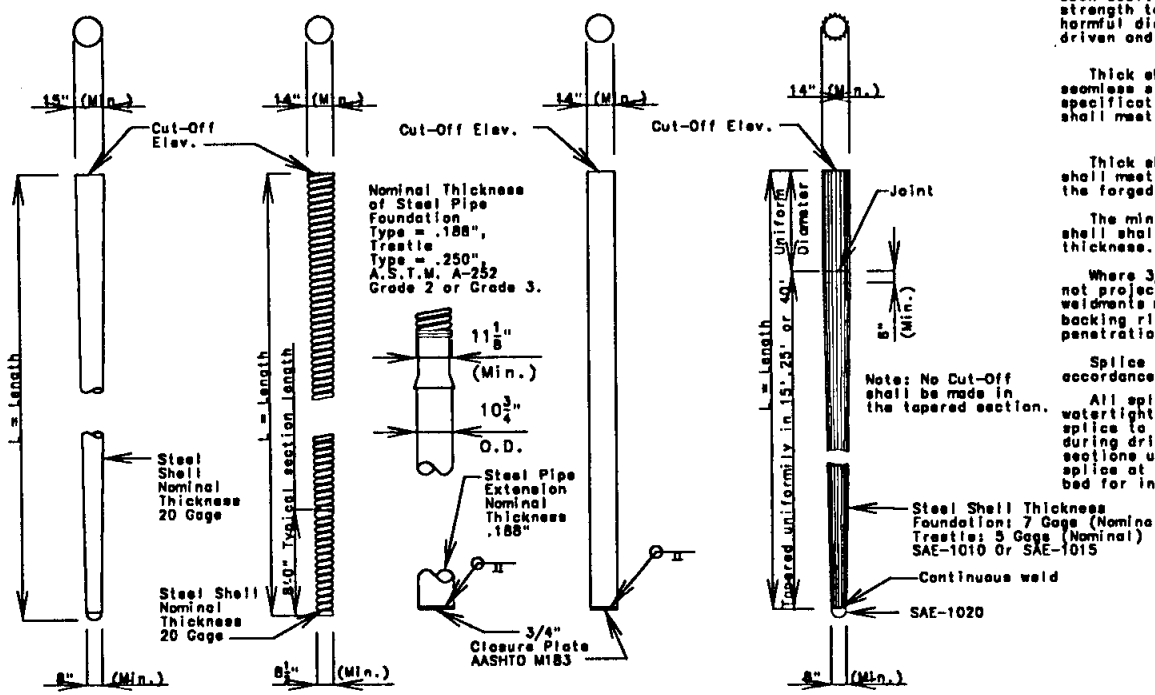

GENERAL NOTES:

All concrete for Cast-in-Place piles shall be Class B1.

Thin shelled types, driven with cores or mandrels, shall have a nominal thickness of 20 GA. and shall, in every case, have such additional thickness as may be required to provide sufficient strength to withstand driving without injury and to resist harmful distortion or buckling due to soil pressure after being driven and the mandrel removed.

Thick shelled types, driven without cores or mandrels, welded or seamless steel pipes, shall meet the requirements of A.S.T.M. specification A-252, Grade 2 or Grade 3, and the 3/4" closure plates shall meet the requirements of AASHTO M183.

Thick shelled types, driven without cores or mandrels, fluted pipes, shall meet the requirements of specification SAE-1010 or SAE-1015 and the forged steel tips or noses shall meet the requirements of SAE-1020.

The minimum wall thickness of any spot or local area of any type shell shall not be more than 12.5% under the specified nominal thickness.

Where 3/4" closure plates are required for tips of pipe they shall not project beyond the outside diameter of the pipe piles. Satisfactory weldments may be made by beveling tip ends of pipe or by use of inside backing rings. In either case proper gaps shall be used to obtain weld penetration full thickness of pipe.

Splice details for cast-in-place concrete piles shall be in accordance with the manufacturers recommendations.

All splices of shells for cast-in-place concrete piles shall be made watertight and to the full strength of the shell above and below the splice to permit hard driving without damage. All shells damaged during driving shall be replaced without cost to the state. Shell sections used for splicing shall be at least 5'-0" in length. The splice at top of tapered section shall be at least 3'-0" below stream bed for intermediate trestle type bents.

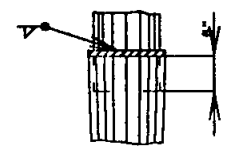

TYPE OF JOINT REQUIRED

MISSOURI HIGHWAY AND TRANSPORTATION COMMISSION

CAST-IN-PLACE CONCRETE PILES (APPROVED TYPE)

REVISED: MAY 1993

DRAWING 702.02C
SHEET 1 OF 1