Missouri Department of Transportation

Bridge Division

Bridge Design Manual

Section 3.31

Revised 09/12/2002

Click Here for Index

Index

3.31.1 Steel Bearings

1.1 Bearing Design (2 sheets)
1.2 Flat Plate Bearings (2 sheets)
1.3 Type "C" Bearings (5 sheets)
1.4 Type "D" Bearings - Expansion (17 sheets)
(2" Allowable Movement, Sheets 1.4.2 thru 1.4.12)
(2-1/2" & 3" Allowable movement, sheets 1.4.13 thru 1.4.17)
1.5 Type "D" Bearings Fixed (7 sheets)
1.6 Type "D" Modified Bearings
1.7 Type "E" Bearings - Expansion (2 sheets)
1.8 Type "E" Bearings - Fixed (6 sheets)
1.9 Type "E" Modified Bearings
1.10 Top Bearing Plate to flange Welding Details - Type "D" & "E" Bearings (2 sheets)
1.11 Top Bearing Plate to flange Welding Details - Type "D" Bearings (2 sheets)

3.31.2 Elastomeric Bearing Pads

2.1 Standard Fixed Bearing Pad Design (5 sheets)
2.2 Standard Elastomeric Bearing Pad Details for P/S Gdrs. (2 sheets)
2.3 Laminated Elastomeric Bearings for P/S Girders (2 sheets)
2.4 Standard Elastomeric Bearing Pad Tables for P/S I-Girders (4 sheets)
2.5 Standard Elastomeric Bearing Pad Details for Steel Girders (2 sheets)
2.6 Standard Elastomeric Bearing Pad Design Example for Steel Girders (2 sheets)
2.7 Standard Elastomeric Bearing Pad Tables for Steel Girders (3 sheets)
2.8 Elastomeric Bearing Details for Steel Structures - (Expansion and fixed) (2 sheets)
2.9 Sole Plate Clipping Detail - (Steel Structures)

3.31.3 PTFE (Polytetraflouroethylene) Bearings

3.1 Sliding Bearing Design (2 sheets)
3.2 Sliding Bearing Tables
3.3 Sliding Bearing Details (2 sheets)
3.4 Sliding Clipping Details
3.5 Hinged Connection Details

3.31.4 Miscellaneous Bearing Details

4.1 Bearing Edge Distance
4.2 Substructure Beam Steps and Pads
4.3 Anchor Bolts
4.4 Anchor Bolt Tables
4.5 (PTFE) Bearing Stopper Plate Details (2 sheets)
4.6 Swedged Anchor Bolt Details

EXPANDING LENGTH OF SUPERSTRUCTURE LIMITATIONS			ALLOWABLE MASONRY PRESSURE	ANCHOR BOLTS
TYPE BRG.	SIMPLE	CONTINUOUS		
Flat Plate	thru 33'	---	700 psi	1"ϕ
Type "C"	35' thru 80'	see diagram	1000 psi	1"ϕ
Type "D"	---	see diagram	1000 psi	Exp Brg..... - 1¼"ϕ Fix Brg - thru 150' spans - 1¼"ϕ Fix Brg - over 150' spans - 1½"ϕ

See the Structural Design Engineer for final choice of bearings.

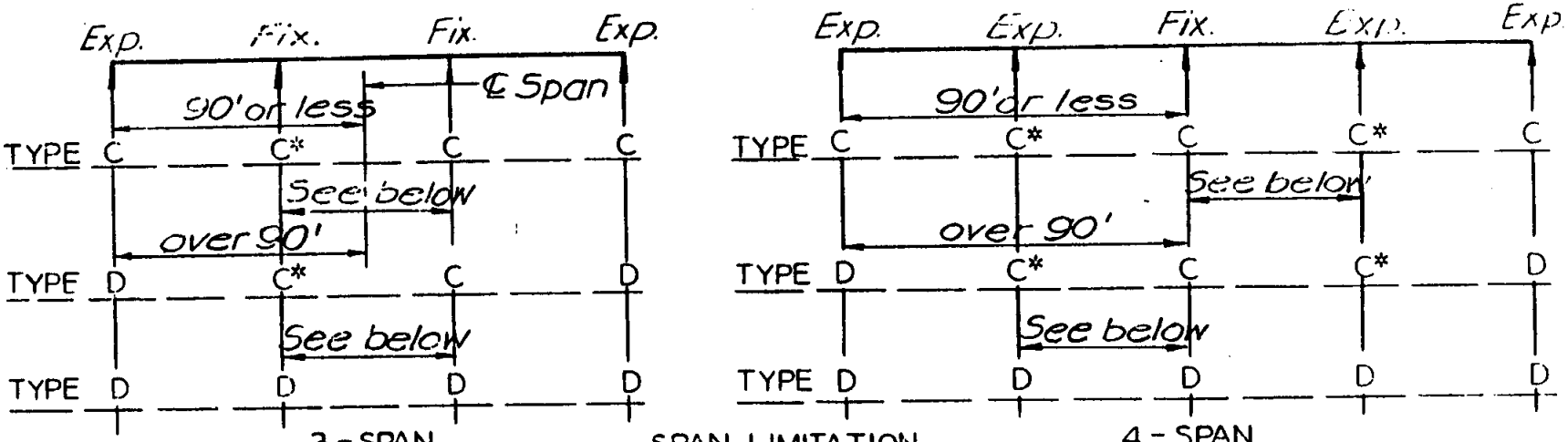

3 - SPAN SPAN LIMITATION DIAGRAMS 4 - SPAN

Use same size bearing for all stringers at each location. Design for maximum stringer reaction.

* Intermediate bents having Type C Bearings, other than the normal fixed bent, shall be designed as if they were fixed bents.

The use of Type C Bearings at intermediate bents is dependent on the column stiffness of the bent and the length of span producing the horizontal deflection due to temperature changes being such that excessive moments are not induced in the columns. Steel or C.I.P. Pile ma in general, be considered to be limber enough not to produce resistance to longitudinal forces.

BEARING - DESIGN
(CONTINUED)

In general, a span/(bent height)^2 ratio of .05 and over may produce excessive column stresses.

Span = Length of superstructure producing deflection.

Bent height = Profile Grade to bottom of footing.

$$\frac{S}{h^2} = .05 \quad \text{or} \quad S = .05h^2$$

Bent Height (h)	S	RESTRICTING SPAN LENGTHS			
		3 SPAN BRIDGE	4 SPAN BRIDGE	5 SPAN BRIDGE	
		(Span #2) BENT #2	(Span #2) BENT #2	(Span #2) BENT #2	(Span #3) BENT #3
15'	11.25'	22.5'	11.25'	11.25' - ½ Span #3	22.5'
20'	20'	40'	20'	20' -	40'
25'	31.25'	62.5'	31.25'	31.25' -	62.5'
30'	45'	90'	45'	45' -	90'
40'	80'	160'	80'	80' -	160'
50'	125'	250'	125'	125' -	250'
60'	180'	360'	180'	180' -	360'
65'	211'	422'	211'	211' -	422'

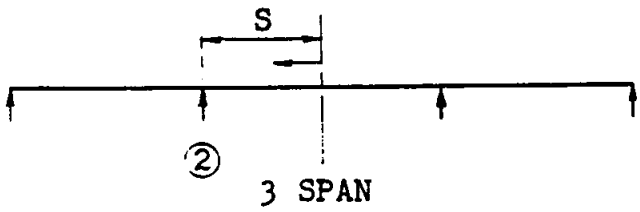

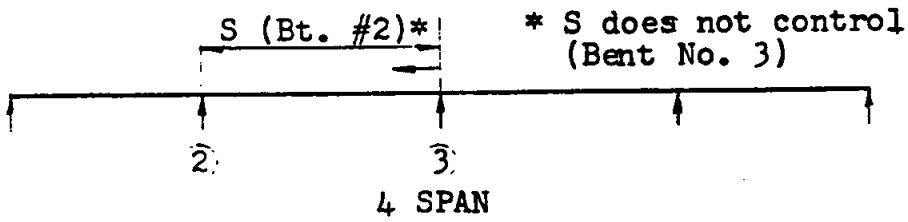

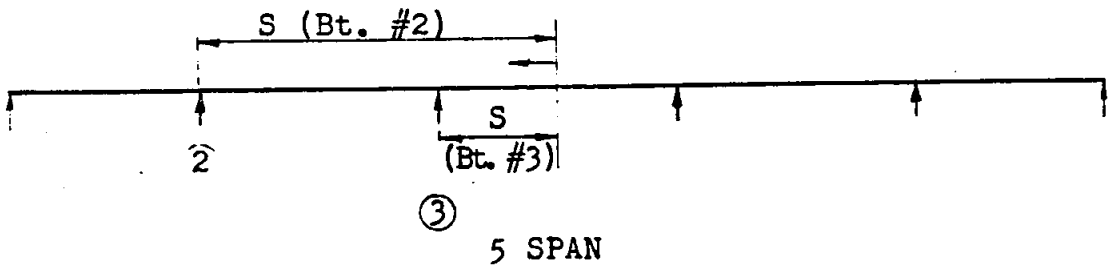

DETAILS OF FLAT PLATE BEARING

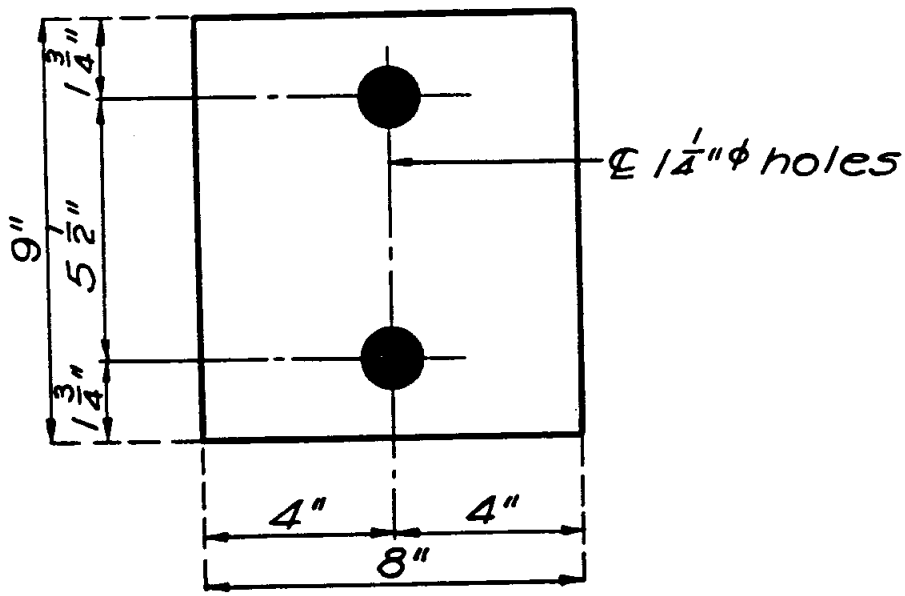

PLAN

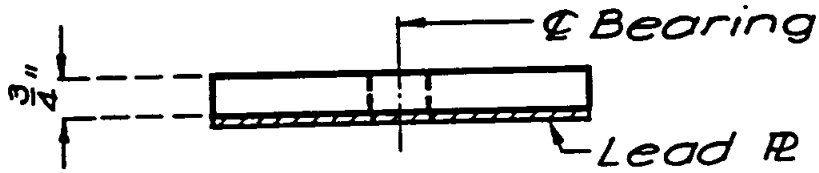

ELEVATION

Estimated Weight = 14.78 lbs. per bearing

Flat plate bearings shall be used on span lengths through 33 feet.

DETAILS OF FLAT PLATE BEARING
WITH BEVEL

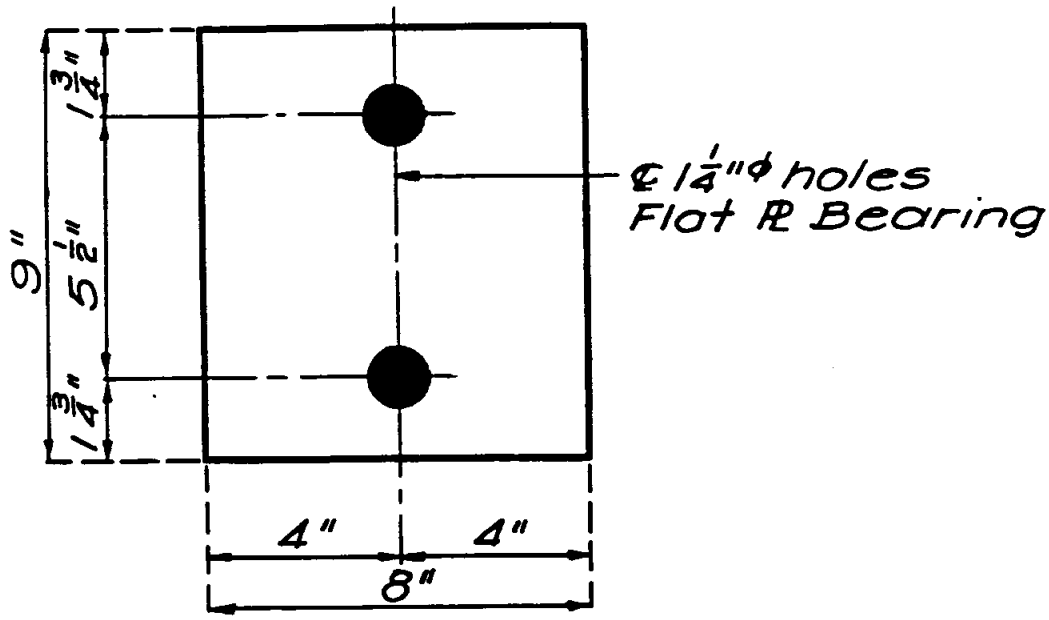

PLAN

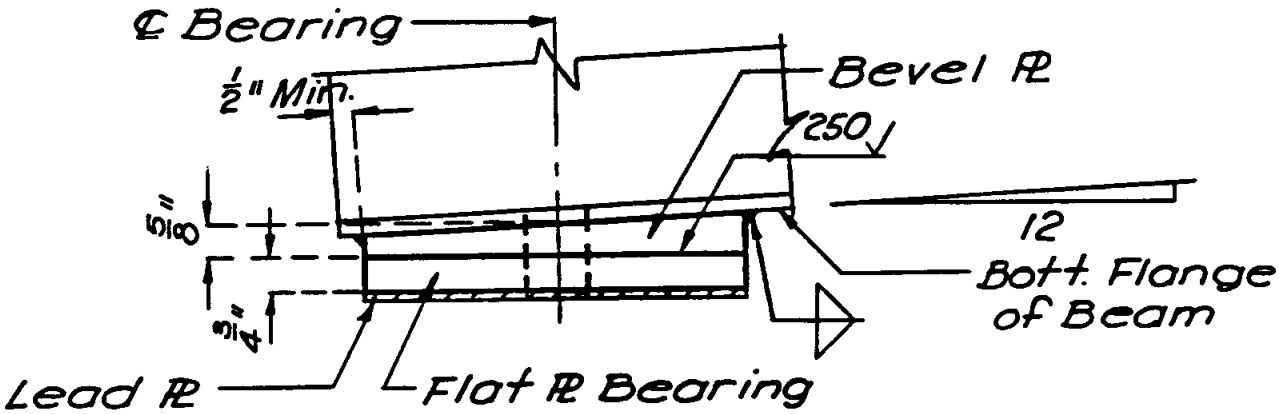

ELEVATION

Bevel plates are required when roadway grade is 2% or greater.

DESIGN DATA:

Steel = A36
fs = 20,000 psi
Maximum allowable masonry pressure = 1,000 psi
"P" = capacity of bearing in kips
"e" = eccentricity
(For the design of expansion or contraction for Type "C" Bearings, use 1/16" per 10.0' of span from fixed bearing + 3/8".)

Value of "P" controlled by masonry pressure =

$$"P" = \frac{Lb - 2.45}{(1 + 6e/b)}$$

Value of "P" controlled by "fs" =

$$"P" = 1.333\ fs\ d^2\ (L - 2.5)/b$$

Type "C" Bearings are applicable to Bridges with no more than 80 ft. of expansion.

Type "C" Bearings are only to be used for the cases as specified by the Design Layout or the Chief Designer.

INSTRUCTIONS FOR USE OF THE STANDARD

Enter the table No. 1 with the minimum (L) and determine the proper bearing for the required capacity.

Use greater (L) if the larger capacity is required or the bearing produced will adapt itself better to the skew, sub-structure beam width, etc.

Overhang of the top plate of the bearing beyond the flange (L') or the flange plate width (L') (see sketches "A", "B", "C" or "D") controls the thickness of the top plate.

Determine the thickness of the top plate by consulting chart No. 1 of this Manual Section.

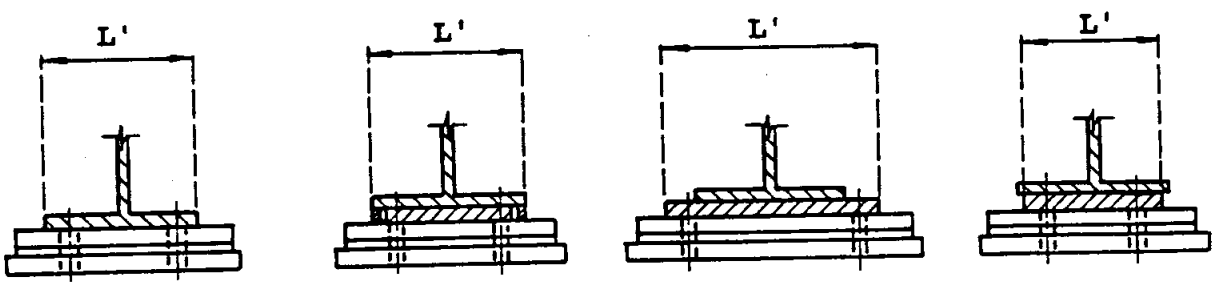

SKETCH "A" SKETCH "B" SKETCH "C" SKETCH "D"

NO FLANGE PLATES FLANGE PLATES

TYPE "C" BEARING

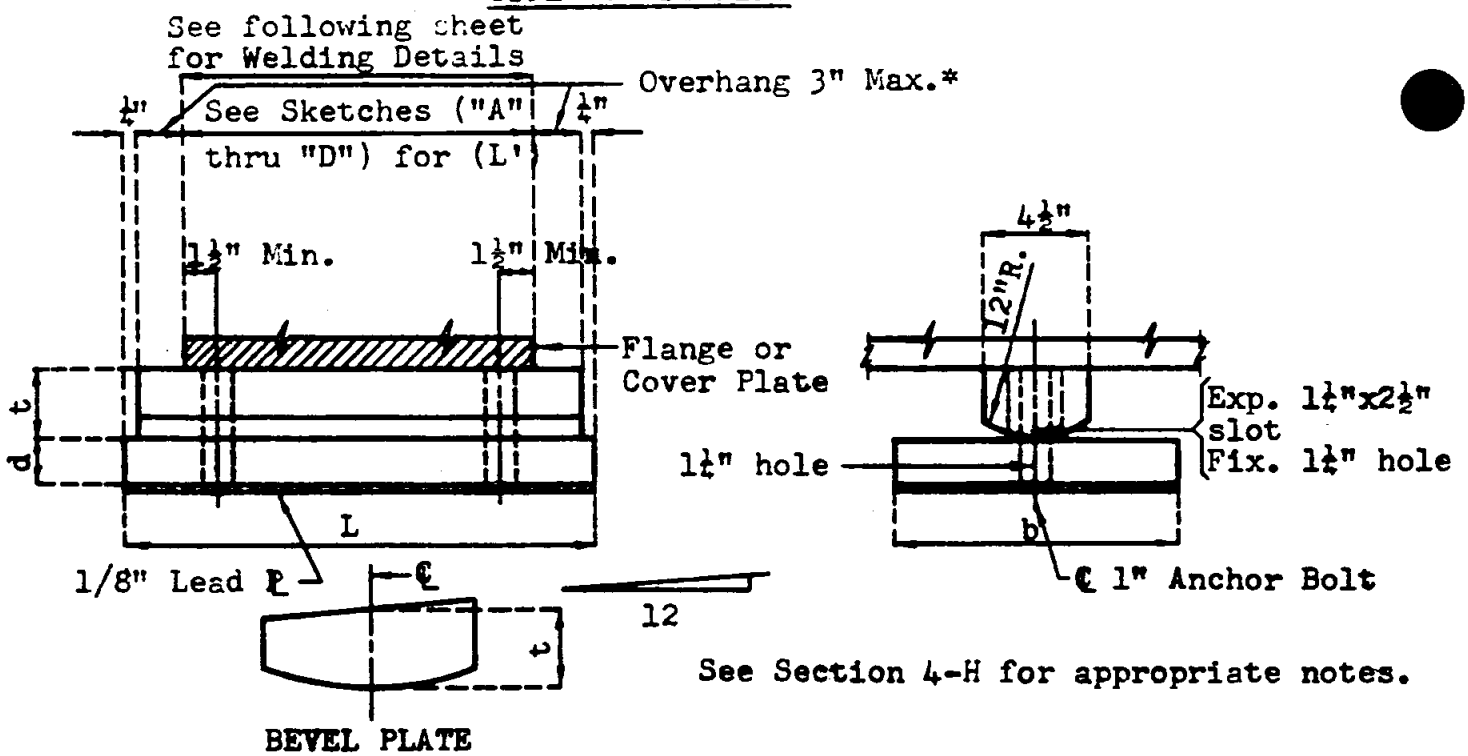

See Section 4-H for appropriate notes.

BEVEL PLATES: Bevel Rocker Plate when roadway grade is 4% or greater.

*** Rocker Plate length shall not be less than Bottom Flange or Cover Plate width.**

TYPICAL DETAILS OF TYPE "C" BEARINGS

TABLE NO. 1 — CAPACITY IN KIPS

L	b x d (inches)						
	8 x 1	8 x 1 1/8	8 x 1 1/4	9 x 1 1/2	10 x 1 3/4	11 x 2	12 x 2 1/4
10½"	26.6K	33.7K	41.6K	53.4K	65.4K	77.6K	90.0K
11"	28.3	35.8	44.2	56.7	69.5	82.4	95.6
11½"	29.9	37.9	46.8	60.0	73.5	87.3	101.2
12"	31.6	40.0	49.4	63.4	77.6	92.1	106.8
12½"	33.2	42.1	52.0	66.7	81.7	97.0	112.5
13"	34.9	44.2	54.6	70.0	85.8	101.8	118.1
13½"	36.6	46.4	57.2	73.4	89.9	106.6	123.7
14"	38.2	48.5	59.8	76.7	94.0	111.5	129.3
14½"	39.9	50.6	62.4	80.0	98.0	116.3	135.0
15"	41.5	52.7	65.0	83.4	102.1	121.2	140.6
15½"	43.2	54.8	67.6	86.7	106.2	126.0	146.2
16"	44.9	56.9	70.2	90.0	110.3	130.9	151.6
16½"	46.5	59.0	72.8	93.4	114.4	135.7	156.4
17"	48.2	61.1	75.4	96.7	118.4	140.6	161.2
17½"	49.8	63.2	78.0	100.0	122.5	145.4	166.0
18"	51.5	65.4	80.6	103.4	126.6	150.3	170.8
18½"	53.2	67.5	83.2	106.7	130.7	155.1	175.6
19"	55.0	69.6	85.9	110.0	134.7	160.0	180.4
19½"	56.7	71.7	88.5	113.3	138.8	164.8	185.2
20"	58.3	73.8	91.1	116.4	142.9	169.7	190.0
20½"	60.0	75.9	93.7	120.0	147.0	174.5	194.8

ROCKER PLATE WELDING DETAILS

TYPE "C" BEARINGS

(Rocker Plate to Flange or Cover Plate)

Flange or Cover plates 13" or less in length shall be welded to the rocker plate with a 3" long weld at each corner, transverse to flange.

Flange or Cover plates larger than 13" in length shall be welded to the rocker plate with a series of 3" long welds as shown below.

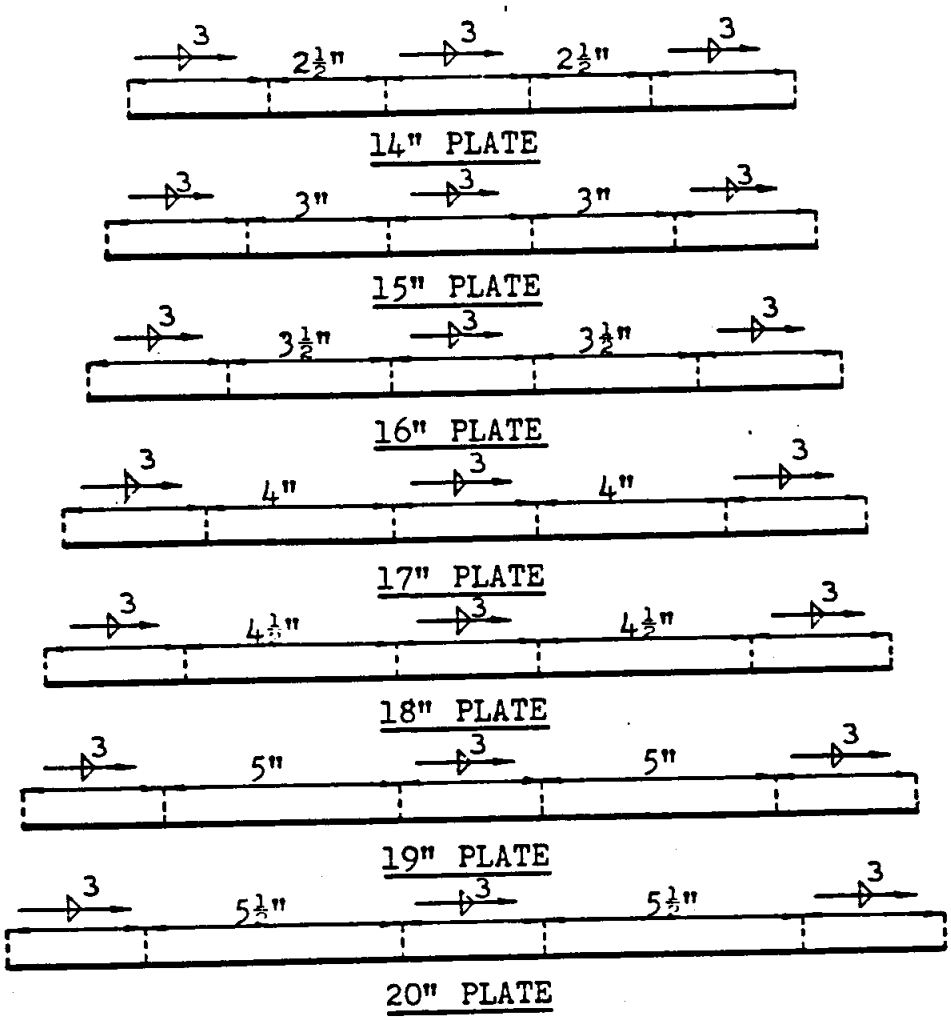

To use chart first calculate Overhang and Line Bearing from formulae shown below. Enter chart with these values and if intersection falls between lines indicating plate thickness use the thicker plate. If the intersection falls on or to the left and below the $1\frac{1}{2}$" Top Plate line the use of the minimum $1\frac{1}{2}$" Top Plate thickness is indicated.

Over hang = $\frac{L-L'-\frac{1}{2}"}{2}$ Line Bearing = $\frac{\text{Reaction}}{L-3"}$ Top Plate thickness (t) Min. = $1\frac{1}{2}$" Max. = 2"

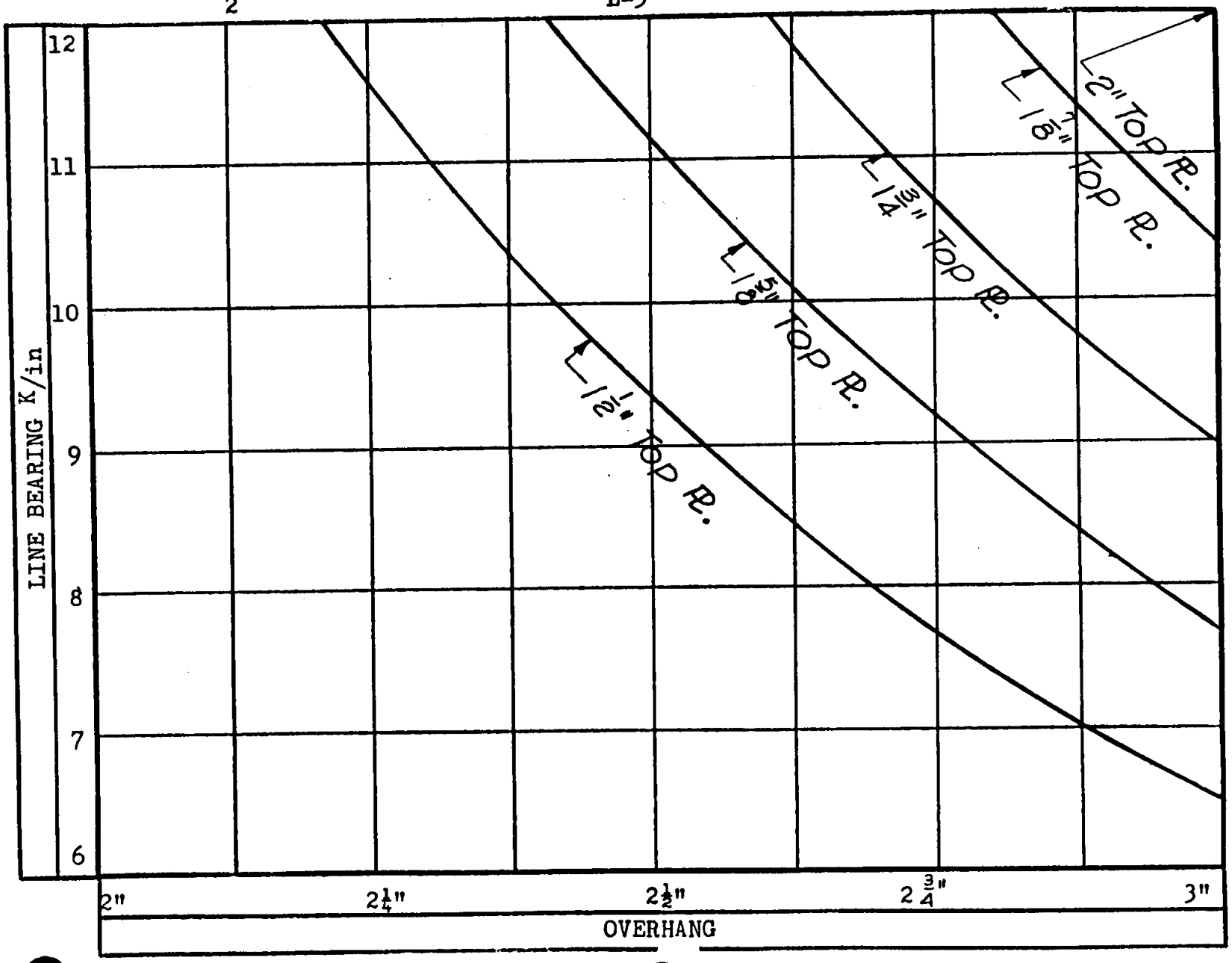

TYPE "C" BEARING

Weight of anchor bolts is included in weight of bottom plate. Do not include weight of anchor bolts in the "Estimated Weight" given on bearing sheet. Deduct 4.5# per bearing for anchor bolts.

TABLE NO. 2 - WEIGHT OF BOTTOM PLATES

Bottom Plate-L	b x d (inches)						
	8x1	8x1 1/8	8x1¼	9x1½	10x1 3/4	11x2	12x2¼
10½"	27.6#	30.5#	33.3#	43.6#	55.3#	68.5#	83.2#
11"	28.7	31.7	34.8	45.5	57.8	71.6	87.0
11½"	29.8	33.0	36.2	47.4	60.3	74.7	90.9
12"	30.9	34.3	37.6	49.3	62.7	77.9	94.7
12½"	32.1	35.6	39.0	51.2	65.2	81.0	98.5
13"	33.2	36.9	40.4	53.1	67.7	84.1	102.4
13½"	34.3	38.1	41.9	55.0	70.2	87.2	106.2
14"	35.5	39.4	43.3	56.9	72.7	90.3	110.0
14½"	36.6	40.7	44.7	58.9	75.1	93.5	113.9
15"	37.7	42.0	46.1	60.8	77.6	96.6	117.7
15½"	38.9	43.3	47.5	62.7	80.1	99.7	121.5
16"	40.0	44.5	49.0	64.6	82.6	102.8	125.3
16½"	41.1	45.8	50.4	66.5	85.1	105.9	129.2
17"	42.2	47.1	51.8	68.4	87.5	109.1	133.0
17½"	43.4	48.4	53.2	70.3	90.0	112.2	136.8
18"	44.5	49.7	54.6	72.2	92.5	115.3	140.7
18½"	45.6	50.9	56.1	74.1	95.0	118.4	144.5
19"	46.8	52.2	57.5	76.0	97.5	121.5	148.3
19½"	47.9	53.5	58.9	78.0	99.9	124.7	152.2
20"	49.0	54.8	60.3	79.9	102.4	127.8	156.0
20½"	50.2	56.1	61.7	81.8	104.9	130.9	159.8

TABLE NO. 3 - WEIGHT OF TOP PLATE EXP. BRG.

Bottom Plate-L	t (PL thickness - inches)				
	1½	1 5/8	1 3/4	1 7/8	2
10½"	16.1#	17.5#	19.0#	20.4#	21.8#
11"	17.0	18.5	20.1	21.6	23.1
11½"	17.9	19.5	21.1	22.7	24.3
12"	18.9	20.5	22.2	23.9	25.5
12½"	19.8	21.5	23.3	25.0	26.8
13"	20.7	22.5	24.3	26.2	28.0
13½"	21.6	23.5	25.4	27.3	29.2
14"	22.5	24.5	26.5	28.5	30.5
14½"	23.4	25.5	27.6	29.6	31.7
15"	24.3	26.5	28.6	30.8	32.9
15½"	25.2	27.5	29.7	31.9	34.2
16"	26.1	28.5	30.8	33.1	35.4
16½"	27.1	29.5	31.8	34.2	36.6
17"	28.0	30.4	32.9	35.4	37.9
17½"	28.9	31.4	34.0	36.5	39.1
18"	29.8	32.4	35.1	37.7	40.3
18½"	30.7	33.4	36.1	38.8	41.5
19"	31.6	34.4	37.2	40.0	42.8
19½"	32.5	35.4	38.3	41.2	44.0
20"	33.4	36.4	39.4	42.3	45.3
20½"	34.3	37.4	40.4	43.5	46.5

TABLE NO. 4
FIXED BRG.

t	Added Weight
1-1/2"	1.1#
1-5/8"	1.1#
1-3/4"	1.2#
1-7/8"	1.3#
2"	1.4#

For weight of top plate for fixed bearir combine the weight in TABLES NO. 3 and NO. 4

TYPE "D" BEARINGS

EXPANSION

DESIGN DATA: Steel A-36, fs = 20,000 psi
Maximum allowable Masonry Pressure = 1,000 psi

ANCHOR BOLT SPACING: Use same anchor bolt spacing for all interior bents when difference in spacing would be 1" or less. If necessary, increase appropriate masonry plate size to accomodate larger spacing. (Use 1¼" A.B. except for 2 Girder Design in which case use 1½" A.B.)

EXPANSION BEARINGS: Value of "P" controlled by Masonry Pressure.

"e" IN MIDDLE 1/3

$$\text{"Pc"} = \frac{Lb - (3.53)^*}{1 + 6e/b}$$

"e" OUT OF MIDDLE 1/3

$$\text{"Pc"} = \frac{3(b/2 - e)L - (3.53)^*}{2}$$

Value of "P" controlled by Steel Stress.

$$\text{"Ps"} = \frac{1.333\ fst^2\,[L - (3^{**})]}{b}$$

* Use 4.81 for 1-3/4" holes (1½" A.B.)
** Use 3.5 for 1-3/4" holes (1½" A.B.)

BEVEL PLATES: Not required

P = Capacity of Bearing in Kips
L = Length of bottom plate
t = Bottom plate thickness
b = Width of bottom plate
e = Eccentricity ****

Length of span or spans	60'	80'	100'	180'	260'	340'	420'
Eccentricity to use	3/4"	7/8"	1"	1½"	2"	2½"	3"

**** Design of expansion or contraction for Type "D" Bearings. (Use 1/16" per 10' of span from fixed bearing + 3/8".)

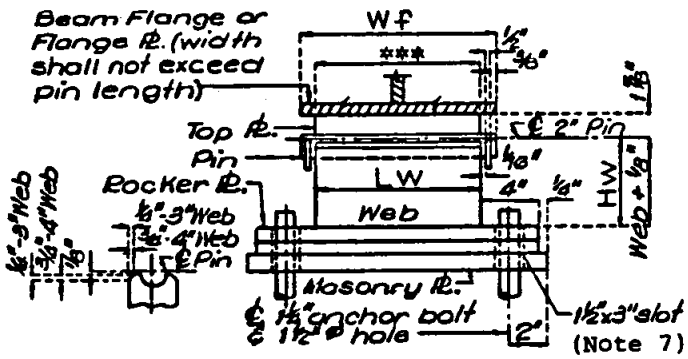

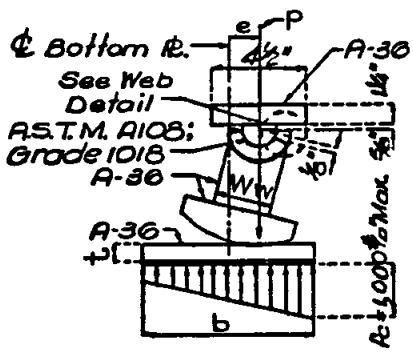

*** Length of top plate shall not be less than out to out dimensions of stiff. plates. (Normal to web.)

NOTES TO DESIGNER:

1. Strive to obtain as much duplication as possible in machined bearing parts (rocker assemblies) within bridges and projects.
2. Lw ≤ Wf + 3".
3. Hw ≤ 2Ww.
4. Ww exceeds 4" use 3" Pin.
5. A vertical line from ℄ Pin shall not fall outside web at maximum eccentricity.
6. Masonry Plate thickness and Rocker Plate thickness shall be in increments of ¼".
7. For 2" < e ≤ 2.5" use 1½" x 1-3/4" and 1½" x 3½" slot Bottom and Top of Rocker plate respectively.
   For 2.5" < e ≤ 3" use 1½" x 2" and 1½" x 4" slot Bottom and Top of Rocker plate respectively.

NOTE: For Bridges having roadway widths of 68' and greater without Longitudinal Expansion Joints in the slab and for curved Bridges, bearings under exterior and interior girder lines shall accomodate lateral movements of superstructure due to temperature changes. See Structural Design Engineer for type of Bearings to be used for each Bridge in the above catagories.

TYPE "D" BEARINGS
EXPANSION (CONT)
(WIDE FLANGE STRINGERS ONLY)

Beam Depth	Capacity in Kips e=3/4"	e=7/8"	e=1"	e=1-½"	e=2"	Masonry Plate	Top Plate	Web	Rocker Plate	Radius	Height (No Lead Plate)	*Weight
W21					45	8x1x16½	8x1¼x4½	3x4-5/8x8	6x1-3/4x16	6½	9-3/8	124
	82	78	73	58	46	8x1½x16½	8x1¼x4½	3x4-5/8x8	6x1-3/4x16	6½	9-7/8	142
				67	64	9x1¼x17½	9x1¼x4½	3x4-5/8x9	6x1-3/4x17	6½	9-5/8	160
	103	97	93	77	64	9x1-3/4x17½	9x1¼x4½	3x4-3/8x9	6x2x17	6½	10-1/8	177
	125	119	113	96	80	10x1-3/4x18½	10x1¼x4½	3x4-3/8x10	6x2x18	6½	10-1/8	200
	150	143	137	116	99	11x2x19½	11x1¼x4½	3x4-7/8x11	6x2x19	7	10-7/8	243
W24					48	8x1x17½	9x1¼x4½	3x4-5/8x9	6x1-3/4x17	6½	9-3/8	135
	87	82	78	62	49	8x1½x17½	9x1¼x4½	3x4-5/8x9	6x1-3/4x17	6½	9-7/8	154
				72	66	9x1¼x18½	10x1¼x4½	3x4-5/8x10	6x1-3/4x18	6½	9-5/8	162
	109	103	98	82	67	9x1-3/4x18½	10x1¼x4½	3x4-5/8x10	6x1-3/4x18	6½	10-1/8	185
	125	119	114	96	81	10x1-3/4x18½	10x1¼x4½	3x4-3/8x10	6x2x18	6½	10-1/8	200
	150	143	137	116	100	11x2x19½	11x1¼x4½	3x5-3/8x11	6x2x19	7½	11-3/8	248
	176	169	162	139	121	12x2¼x20½	12x1¼x4½	3x5-3/8x12	6x2x20	7½	11-5/8	293
W27					52	8x1x18½	10x1¼x4½	3x4-5/8x10	6x1-3/4x18	6½	9-3/8	146
	92	87	83	66	52	8x1½x18½	10x1¼x4½	3x4-5/8x10	6x1-3/4x18	6½	9-7/8	166
				72	66	9x1¼x18½	10x1¼x4½	3x4-5/8x10	6x1-3/4x18	6½	9-5/8	162
	108	103	98	81	66	9x1-3/4x18½	10x1¼x4½	3x4-5/8x10	6x1-3/4x18	6½	10-1/8	185
				93	80	10x1½x18½	10x1¼x4½	3x4-5/8x10	6x1-3/4x18	6½	9-7/8	182
	125	119	113	96	80	10x1-3/4x18½	10x1¼x4½	3x4-3/8x10	6x2x18	6½	10-1/8	200
			123	116	99	11x1-3/4x19½	11x1¼x4½	3x4-3/8x11	6x2x19	6½	10-1/8	223
	144	143	136	116	99	11x2x19½	11x1¼x4½	3x4-3/8x11	6x2x19	6½	10-3/8	238
	176	169	162	139	121	12x2¼x20½	12x1¼x4½	4x6-3/8x12	7x2x20	8½	12-5/8	333
	205	197	189	163	144	13x2½x21½	13x1¼x4½	4x6-3/8x13	7x2x21	8½	12-7/8	387
W30					53	8x1x19	10½x1¼x4½	3x4-5/8x10½	6x1-3/4x18½	6½	9-3/8	151
	95	90	85	68	53	8x1½x19	10½x1¼x4½	3x4-5/8x10½	6x1-3/4x18½	6½	9-7/8	172
				74	68	9x1¼x19	10½x1¼x4½	3x4-5/8x10½	6x1-3/4x18½	6½	9-5/8	168
	111	105	100	84	68	9x1-3/4x19	10½x1¼x4½	3x4-5/8x10½	6x1-3/4x18½	6½	10-1/8	192
				102	86	10x1½x20	11½x1¼x4½	3x4-5/8x11½	6x1-3/4x19½	6½	9-7/8	201
	135	129	122	103	86	10x1-3/4x20	11½x1¼x4½	3x4-3/8x11½	6x2x19½	6½	10-1/8	220
			126	119	101	11x1-3/4x20	11½x1¼x4½	3x4-3/8x11½	6x2x19½	6½	10-1/8	230
	149	147	140	119	101	11x2x20	11½x1¼x4½	3x4-3/8x11½	6x2x19½	6½	10-3/8	246
			148	135	118	12x2x20	11½x1¼x4½	3x4-3/8x11½	6x2x19½	6½	10-3/8	252
	200	192	184	159	140	13x2½x21	12½x1¼x4½	4x6-7/8x12½	7x2x20½	9	13-3/8	384
	230	221	213	185	164	14x2-3/4x22	13½x1¼x4½	4x6-5/8x13½	7x2¼x21½	9	13-5/8	450

*Weight does not include 2 anchor bolts @ 12#

NOTE: For required capacities larger than those provided by these tables, see following pages this section.

TYPE "D" BEARINGS
EXPANSION (CONT.)
(WIDE FLANGE STRINGERS ONLY)

Beam Depth	Capacity in Kips e=3/4"	e=7/8"	e=1"	e=1-½"	e=2"	Masonry Plate	Top Plate	Web	Rocker Plate	Radius	Height (No Lead Plate)	*Weight
W33					56	8x1x20	11½x1¼x4½	3x4-5/8x11½	6x1-3/4x19½	6½	9-3/8	162
	100	94	89	71	56	8x1½x20	11½x1¼x4½	3x4-5/8x11½	6x1-3/4x19½	6½	9-7/8	184
				79	71	9x1¼x20	11½x1¼x4½	3x4-5/8x11½	6x1-3/4x19½	6½	9-5/8	180
	118	111	106	88	71	9x1-3/4x20	11½x1¼x4½	3x4-5/8x11½	6x1-3/4x19½	6½	10-1/8	205
				108	91	10x1½x21	12½x1¼x4½	3x4-5/8x12½	6x1-3/4x20½	6½	9-7/8	214
	142	135	129	109	91	10x1-3/4x21	12½x1¼x4½	3x4-3/8x12½	6x2x20½	6½	10-1/8	234
			134	125	107	11x1-3/4x21	12½x1¼x4½	3x4-3/8x12½	6x2x20½	6½	10-1/8	242
	157	154	147	125	107	11x2x21	12½x1¼x4½	3x4-3/8x12½	6x2x20½	6½	10-3/8	258
			157	142	124	12x2x21	12½x1¼x4½	3x4-3/8x12½	6x2x20½	6½	10-3/8	270
		187	184	159	140	13x2¼x21	12½x1¼x4½	4x7-7/8x12½	7x2x20½	10	14-1/8	380
	200	191	184	159	140	13x2½x21	12½x1¼x4½	4x7-7/8x12½	7x2x20½	10	14-3/8	399
	226	221	212	185	164	14x2½x22	13½x1¼x4½	4x7-7/8x13½	7x2x21½	10	14-3/8	438
	263	253	244	213	190	15x2-3/4x23	14½x1¼x4½	4x7-5/8x14½	7x2¼x22½	10	14-5/8	510
W36					58	8x1x20½	12x1¼x4½	3x4-5/8x12	6x1-3/4x20	6½	9-3/8	167
	103	97	92	73	58	8x1½x20½	12x1¼x4½	3x4-5/8x12	6x1-3/4x20	6½	9-7/8	190
					73	9x1¼x20½	12x1¼x4½	3x4-5/8x12	6x1-3/4x12	6½	9-5/8	186
	121	114	109	90	73	9x1-3/4x20½	12x1¼x4½	3x4-5/8x12	6x1-3/4x20	6½	10-1/8	211
				105	89	10x1½x20½	12x1¼x4½	3x4-5/8x12	6x1-3/4x20	6½	9-7/8	207
	139	132	126	106	89	10x1-3/4x20½	12x1¼x4½	3x4-3/8x12	6x2x20	6½	10-1/8	227
			137	128	109	11x1-3/4x21½	13x1¼x4½	3x4-3/8x13	6x2x21	6½	10-1/8	249
	165	158	151	128	109	11x2x21½	13x1¼x4½	3x4-3/8x13	6x2x21	6½	10-3/8	266
			161	145	127	12x2x21½	13x1¼x4½	3x4-3/8x13	6x2x21	6½	10-3/8	278
		192	189	163	143	13x2¼x21½	13x1¼x4½	4x7-7/8x13	7x2½x21	10½	14-5/8	412
	205	196	189	163	143	13x2½x21½	13x1¼x4½	4x7-7/8x13	7x2½x21	10½	14-7/8	431
	221	216	208	181	160	14x2½x21½	13x1¼x4½	4x7-7/8x13	7x2½x21	10½	14-7/8	446
	257	248	239	209	186	15x2-3/4x22½	14x1¼x4½	4x7-7/8x14	7x2½x22	10½	15-1/8	511
	290	280	271	238	213	16x3x23½	15x1¼x4½	4x7-7/8x15	7x2½x23	10½	15-3/8	583

*Weight does not include 2 anchor bolts @ 12#

NOTE: For required capacities larger than those provided by these tables, see following tables this section.

TYPE "D" BEARINGS
(Expansion Cont.)

ALLOWABLE MOVEMENT = 2"

Bottom Flange Width	Capacity in Kips e=3/4"	e=7/8"	e=1"	e=1½"	e=2"	Masonry Plate	Top Plate	Web	Rocker Plate	Radius	Height (No Lead Plate	*Weight
8"					45	8x1x16½	8x1¼x4½	3x4-5/8x8	6x1-3/4x16	6½	9-3/8	124
	82	78	73	58	46	8x1½x16½	8x1¼x4½	3x4-5/8x8	6x1-3/4x16	6½	9-7/8	142
				67	64	9x1¼x17½	9x1¼x4½	3x4-5/8x9	6x1-3/4x17	6½	9-5/8	150
	103	97	93	77	64	9x1-3/4x17½	9x1¼x4½	3x4-3/8x9	6x2x17	6½	10-1/8	177
	125	119	113	96	80	10x1-3/4x18½	10x1¼x4½	3x4-3/8x10	6x2x18	6½	10-1/8	200
	150	143	137	116	99	11x2x19½	11x1¼x4½	3x4-7/8x11	6x2x19	7	10-7/8	243
9"					48	8x1x17½	9x1¼x4½	3x4-5/8x9	6x1-3/4x17	6½	9-3/8	135
	87	82	78	62	49	8x1½x17½	9x1¼x4½	3x4-5/8x9	6x1-3/4x17	6½	9-7/8	154
				72	66	9x1¼x18½	10x1¼x4½	3x4-5/8x10	6x1-3/4x18	6½	9-5/8	162
	109	103	98	82	67	9x1-3/4x18½	10x1¼x4½	3x4-5/8x10	6x1-3/4x18	6½	10-1/8	185
	125	119	114	96	81	10x1-3/4x18½	10x1¼x4½	3x4-3/8x10	6x2x18	6½	10-1/8	200
	150	143	137	116	100	11x2x19½	11x1¼x4½	3x5-3/8x11	6x2x19	7½	11-3/8	248
	176	169	162	139	121	12x2¼x20½	12x1¼x4½	3x5-3/8x12	6x2x20	7½	11-5/8	293
10"					52	8x1x18½	10x1¼x4½	3x4-5/8x10	6x1-3/4x18	6½	9-3/8	146
	92	87	83	66	52	8x1½x18½	10x1¼x4½	3x4-5/8x10	6x1-3/4x18	6½	9-7/8	166
				72	66	9x1¼x18½	10x1¼x4½	3x4-5/8x10	6x1-3/4x18	6½	9-5/8	162
	108	103	98	81	66	9x1-3/4x18½	10x1¼x4½	3x4-5/8x10	6x1-3/4x18	6½	10-1/8	185
				93	80	10x1½x18½	10x1¼x4½	3x4-5/8x10	6x1-3/4x18	6½	9-7/8	182
	125	119	113	96	80	10x1-3/4x18½	10x1¼x4½	3x4-3/8x10	6x2x18	6½	10-1/8	200
			123	116	99	11x1-3/4x19½	11x1¼x4½	3x4-3/8x11	6x2x19	6½	10-1/8	223
	144	143	136	116	99	11x2x19½	11x1¼x4½	3x4-3/8x11	6x2x19	6½	10-3/8	238
	176	169	162	139	121	12x2¼x20½	12x1¼x4½	4x6-3/8x12	7x2x20	8½	12-5/8	333
	205	197	189	163	144	13x2½x21½	13x1¼x4½	4x6-3/8x13	7x2x21	8½	12-7/8	387

*Weight does not include 2 anchor bolts @ 12#

TYPE "D" BEARINGS
(EXPANSION (CONT.)

ALLOWABLE MOVEMENT = 2"

Bottom Flange Width	Capacity in Kips e=3/4"	e=7/8"	e=1"	e=1½"	e=2"	Masonry Plate	Top Plate	Web	Rocker	Radius	Height (No Lead Plate)	*Weight
11"					55	8x1x19½	11x1¼x4½	3x4-5/8x11	6x1-3/4x19	6½	9-3/8	156
	98	92	87	70	55	8x1½x19½	11x1¼x4½	3x4-5/8x11	6x1-3/4x19	6½	9-7/8	178
				81	73	9x1¼x20½	12x1¼x4½	3x4-5/8x12	6x1-3/4x20	6½	9-5/8	186
	121	114	109	90	73	9x1-3/4x20½	12x1¼x4½	3x4-5/8x12	6x1-3/4x20	6½	10-1/8	211
				111	93	10x1½x21½	13x1¼x4½	3x4-5/8x13	6x1-3/4x21	6½	9-7/8	220
	146	139	132	111	93	10x1-3/4x21½	13x1¼x4½	3x4-3/8x13	6x2x21	6½	10-1/8	241
			137	128	109	11x1-3/4x21½	13x1¼x4½	3x4-3/8x13	6x2x21	6½	10-1/8	249
	165	158	151	128	109	11x2x21½	13x1¼x4½	3x4-3/8x13	6x2x21	6½	10-3/8	266
	194	185	178	152	133	12x2½x22½	14x1¼x4½	3x5-7/8x14	6x2x22	8	12-1/8	334
	210	206	198	171	150	13x2½x22½	14x1¼x4½	3x5-7/8x14	6x2x22	8	12-3/8	369
12"					59	8x1x20½	12x1¼x4½	3x4-5/8x12	6x1-3/4x20	6½	9-3/8	167
	103	97	92	75	60	8x1½x20½	12x1¼x4½	3x4-5/8x12	6x1-3/4x20	6½	9-7/8	190
					73	9x1¼x20½	12x1¼x4½	3x4-5/8x12	6x1-3/4x20	6½	9-5/8	186
	120	114	108	90	75	9x1-3/4x20½	12x1¼x4½	3x4-5/8x12	6x1-3/4x20	6½	10-1/8	211
				111	93	10x1½x21½	13x1¼x4½	3x4-5/8x13	6x1-3/4x21	6½	9-7/8	220
	146	139	132	111	93	10x1-3/4x21½	13x1¼x4½	3x4-3/8x13	6x2x21	6½	10-1/8	241
			137	128	109	11x1-3/4x21½	13x1¼x4½	3x4-3/8x13	6x2x21	6½	10-1/8	249
	165	158	151	128	109	11x2x21½	13x1¼x4½	3x4-3/8x13	6x2x21	6½	10-3/8	266
			173	152	133	12x2x22½	14x1¼x4½	3x4-3/8x14	6x2x22	6½	10-3/8	295
	224	215	207	178	157	13x2½x23½	15x1¼x4½	4x6-7/8x15	7x2x23	9	13-3/8	434
	244	237	228	198	175	14x2½x23½	15x1¼x4½	4x6-5/8x15	7x2¼x23	9	13-3/8	445
13"					61	8x1x21½	13x1¼x4½	3x4-5/8x13	6x1-3/4x21	6½	9-3/8	178
	108	102	96	77	61	8x1½x21½	13x1¼x4½	3x4-5/8x13	6x1-3/4x21	6½	9-7/8	202
				86	77	9x1¼x21½	13x1¼x4½	3x4-5/8x13	6x1-3/4x21	6½	9-5/8	197
	127	120	114	95	77	9x1-3/4x21½	13x1¼x4½	3x4-5/8x13	6x1-3/4x21	6½	10-1/8	224
				117	98	10x1½x22½	14x1¼x4½	3x4-5/8x14	6x1-3/4x22	6½	9-7/8	233
	153	145	138	117	98	10x1-3/4x22½	14x1¼x4½	3x4-3/8x14	6x2x22	6½	10-1/8	254
			145	134	115	11x1-3/4x22½	14x1¼x4½	3x4-3/8x14	6x2x22	6½	10-1/8	265
	170	165	158	134	115	11x2x22½	14x1¼x4½	3x4-3/8x14	6x2x22	6½	10-3/8	283
			179	159	139	12x2x23½	15x1¼x4½	3x4-3/8x15	6x2x23	6½	10-3/8	311
	234	224	216	186	164	13x2½x24½	16x1¼x4½	4x6-7/8x16	7x2x24	9	13-3/8	456
	256	247	238	207	183	14x2½x24½	16x1¼x4½	4x6-5/8x16	7x2¼x24	9	13-3/8	480

*Weight does not include 2 anchor bolts @ 12#

TYPE "D" BEARINGS
(Expansion Cont.)

ALLOWABLE MOVEMENT = 2"

Bottom Flange Width	Capacity in Kips e=3/4"	e=7/8"	e=1"	e=1¼"	e=2"	Masonry Plate	Top Plate	Web	Rocker	Radius	Height (No Lead Plate)	*Weight
14"				65	64	8x1x22½	14x1¼x4½	3x4-5/8x14	6x1-3/4x22	6½	9-3/8	189
	113	107	101	81	64	8x1½x22½	14x1¼x4½	3x4-5/8x14	6x1-3/4x22	6½	9-7/8	214
				90	81	9x1¼x22½	14x1¼x4½	3x4-5/8x14	6x1-3/4x22	6½	9-5/8	209
	130	126	119	99	81	9x1½x22½	14x1¼x4½	3x4-5/8x14	6x1-3/4x22	6½	9-7/8	223
			123	122	102	10x1½x23½	15x1¼x4½	3x4-5/8x15	6x1-3/4x23	6½	9-7/8	245
	160	152	145	122	109	10x1-3/4x23½	15x1¼x4½	3x4-3/8x15	6x2x23	6½	10-1/8	268
			152	140	120	11x1-3/4x23½	15x1¼x4½	3x4-3/8x15	6x2x23	6½	10-1/8	280
	179	173	165	140	120	11x2x23½	15x1¼x4½	3x4-3/8x15	6x2x23	6½	10-3/8	298
			188	166	145	12x2x24½	16x1¼x4½	3x4-3/8x16	6x2x24	6½	10-3/8	326
	234	224	216	186	164	13x2½x24½	16x1¼x4½	4x7-3/8x16	7x2x24	9½	13-7/8	466
	267	257	247	215	190	14x2½x25½	17x1¼x4½	4x7-3/8x17	7x2x25	9½	13-7/8	507
	288	281	271	237	211	15x2-3/4x25½	17x1¼x4½	4x7-1/8x17	7x2¼x25	9½	14-1/8	558
15"				68	67	8x1x23½	15x1¼x4½	3x4-5/8x15	6x1-3/4x23	6½	9-3/8	199
	118	111	105	85	67	8x1½x23½	15x1¼x4½	3x4-5/8x15	6x1-3/4x23	6½	9-7/8	225
				95	85	9x1¼x23½	15x1¼x4½	3x4-5/8x15	6x1-3/4x23	6½	9-5/8	221
	137	131	125	104	85	9x1½x23½	15x1¼x4½	3x4-5/8x15	6x1-3/4x23	6½	9-7/8	235
			129	127	107	10x1½x24½	16x1¼x4½	3x4-5/8x16	6x1-3/4x24	6½	9-7/8	258
	167	158	151	127	107	10x1-3/4x24½	16x1¼x4½	3x4-3/8x16	6x2x24	6½	10-1/8	282
			160	146	125	11x1-3/4x24½	16x1¼x4½	3x4-3/8x16	6x2x24	6½	10-1/8	294
	189	180	172	146	125	11x2x24½	16x1¼x4½	3x4-3/8x16	6x2x24	6½	10-3/8	313
			200	173	151	12x2x25½	17x1¼x4½	3x4-3/8x17	6x2x25	6½	10-3/8	342
	244	234	224	194	171	13x2½x25½	17x1¼x4½	4x7-3/8x17	7x2x25	9½	13-7/8	489
	278	267	257	224	198	14x2½x26½	18x1¼x4½	4x7-3/8x18	7x2x26	9½	13-7/8	530
	302	292	281	246	219	15x2-3/4x26½	18x1¼x4½	4x7-1/8x18	7x2¼x26	9½	14-1/8	584
16"				72	70	8x1x24½	16x1¼x4½	3x4-5/8x16	6x1-3/4x24	6½	9-3/8	210
	123	116	110	88	70	8x1½x24½	16x1¼x4½	3x4-5/8x16	6x1-3/4x24	6½	9-7/8	237
				100	88	9x1¼x24½	16x1¼x4½	3x4-5/8x16	6x1-3/4x24	6½	9-5/8	232
	143	137	130	108	88	9x1½x24½	16x1¼x4½	3x4-5/8x16	6x1-3/4x24	6½	9-7/8	248
			129	127	107	10x1½x24½	16x1¼x4½	3x4-5/8x16	6x1-3/4x24	6½	9-7/8	258
	167	158	151	127	107	10x1-3/4x24½	16x1¼x4½	3x4-3/8x16	6x2x24	6½	10-1/8	282
			167	152	130	11x1-3/4x25½	17x1¼x4½	3x4-3/8x17	6x2x25	6½	10-1/8	308
	197	188	179	152	130	11x2x25½	17x1¼x4½	3x4-3/8x17	6x2x25	6½	10-3/8	327
			200	173	151	12x2x25½	17x1¼x4½	3x4-3/8x17	6x2x25	6½	10-3/8	342
	253	243	233	201	177	13x2½x26½	18x1¼x4½	4x7-7/8x18	7x2½x26	10½	14-7/8	547
	278	267	257	224	198	14x2½x26½	18x1¼x4½	4x7-7/8x18	7x2½x26	10½	14-7/8	566
	.5	303	292	256	227	15x2-3/4x27½	19x1¼x4½	4x7-7/8x19	7x2½x27	10½	15-1/8	639
	341	329	317	279	249	16x3x27½	19x1¼x4½	4x7-7/8x19	7x2½x27	10½	15-3/8	692

*Weight does not include 2 anchor bolts @ 12#

TYPE "D" BEARINGS
(Expansion Cont.)

ALLOWABLE MOVEMENT = 2"

Bottom Flange Width	Capacity in Kips e=3/4"	e=7/8"	e=1"	e=1½"	e=2"	Masonry Plate	Top Plate	Web	Rocker	Radius	Height (No Lead Plate)	*Weight
17"				75	73	8x1x25½	17x1¼x4½	3x4-5/8x17	6x1-3/4x25	6½	9-3/8	221
	128	121	115	92	73	8x1½x25½	17x1¼x4½	3x4-5/8x17	6x1-3/4x25	6½	9-7/8	249
				104	92	9x1¼x25½	17x1¼x4½	3x4-5/8x17	6x1-3/4x25	6½	9-5/8	244
	151	143	136	113	92	9x1½x25½	17x1¼x4½	3x4-5/8x17	6x1-3/4x25	6½	9-7/8	260
			135	132	111	10x1½x25½	17x1¼x4½	3x4-5/8x17	6x1-3/4x25	6½	9-7/8	271
	173	165	157	132	111	10x1-3/4x25½	17x1¼x4½	3x4-3/8x17	6x2x25	6½	10-1/8	295
			174	158	136	11x1-3/4x26½	18x1¼x4½	3x4-3/8x18	6x2x26	6½	10-1/8	322
	204	195	186	158	136	11x2x26½	18x1¼x4½	3x4-3/8x18	6x2x26	6½	10-3/8	342
			206	180	157	12x2x26½	18x1¼x4½	3x4-3/8x18	6x2x26	6½	10-3/8	357
	263	252	242	209	184	13x2½x27½	19x1¼x4½	4x7-7/8x19	7x2½x27	10½	14-7/8	571
	289	277	267	232	205	14x2½x27½	19x1¼x4½	4x7-7/8x19	7x2½x27	10½	14-7/8	591
	326	314	303	265	236	15x2-3/4x28½	20x1¼x4½	4x7-7/8x20	7x2½x28	10½	15-1/8	666
	353	341	329	290	259	16x3x28½	20x1¼x4½	4x7-7/8x20	7x2½x28	10½	15-3/8	720
18"				78	76	8x1x26½	18x1¼x4½	3x4-5/8x18	6x1-3/4x26	6½	9-3/8	231
	133	126	119	96	76	8x1½x26½	18x1¼x4½	3x4-5/8x18	6x1-3/4x26	6½	9-7/8	261
				109	96	9x1¼x26½	18x1¼x4½	3x4-5/8x18	6x1-3/4x26	6½	9-5/8	256
	157	148	141	117	96	9x1½x26½	18x1¼x4½	3x4-5/8x18	6x1-3/4x26	6½	9-7/8	272
			141	138	116	10x1½x26½	18x1¼x4½	3x4-5/8x18	6x1-3/4x26	6½	9-7/8	284
	180	171	163	138	116	10x1-3/4x26½	18x1¼x4½	3x4-3/8x18	6x2x26	6½	10-1/8	309
			182	164	141	11x1-3/4x27½	19x1¼x4½	3x4-3/8x19	6x2x27	6½	10-1/8	336
	212	202	193	164	141	11x2x27½	19x1¼x4½	3x4-3/8x19	6x2x27	6½	10-3/8	357
			218	187	163	12x2x27½	19x1¼x4½	3x4-3/8x19	6x2x27	6½	10-3/8	373
	273	261	251	217	191	13x2½x28½	20x1¼x4½	4x7-7/8x20	7x2½x28	10½	14-7/8	596
	299	288	277	241	213	14x2½x28½	20x1¼x4½	4x7-7/8x20	7x2½x28	10½	14-7/8	616
	338	325	314	274	244	15x2-3/4x29½	21x1¼x4½	4x7-7/8x21	7x2½x29	10½	15-1/8	693
	366	353	341	300	268	16x3x29½	21x1¼x4½	4x7-7/8x21	7x2½x29	10½	15-3/8	749
19"				82	79	8x1x27½	19x1¼x4½	3x4-5/8x19	6x1-3/4x27	6½	9-3/8	242
	139	131	124	100	79	8x1½x27½	19x1¼x4½	3x4-5/8x19	6x1-3/4x27	6½	9-7/8	273
				113	100	9x1¼x27½	19x1¼x4½	3x4-5/8x19	6x1-3/4x27	6½	9-5/8	267
	163	154	146	122	100	9x1½x27½	19x1¼x4½	3x4-5/8x19	6x1-3/4x27	6½	9-7/8	285
			147	143	120	10x1½x27½	19x1¼x4½	3x4-5/8x19	6x1-3/4x27	6½	9-7/8	296
	187	178	170	143	120	10x1-3/4x27½	19x1¼x4½	3x4-3/8x19	6x2x27	6½	10-1/8	323
			180	170	146	11x1-3/4x28½	20x1¼x4½	3x4-3/8x20	6x2x28	6½	10-1/8	350
	220	210	201	170	146	11x2x28½	20x1¼x4½	3x4-3/8x20	6x2x28	6½	10-3/8	372
		227	226	193	169	12x2x28½	20x1¼x4½	3x4-3/8x20	6x2x28	6½	10-3/8	388
	282	271	260	225	198	13x2½x29½	21x1¼x4½	4x7-7/8x21	7x2½x29	10½	14-7/8	621
	310	298	287	249	220	14x2½x29½	21x1¼x4½	4x7-7/8x21	7x2½x29	10½	14-7/8	641
	349	336	324	284	252	15x2-3/4x30½	22x1¼x4½	4x7-7/8x22	7x2½x30	10½	15-1/8	720
	378	365	352	310	277	16x3x30½	22x1¼x4½	4x7-7/8x22	7x2½x30	10½	15-3/8	778

*Weight does not include 2 anchor bolts @ 12#

TYPE "D" BEARINGS
(Expansion Cont.)

ALLOWABLE MOVEMENT = 2"

Bottom Flange Width	Capacity in Kips e=3/4"	e=7/8"	e=1"	e= 1½"	e=2"	Masonry Plate	Top Plate	Web	Rocker	Radius	Height (No Lead Plate)	*Weight
20"				85	82	8x1x28½	20x1½x4½	3x4-5/8x20	6x1-3/4x28	6½	9-3/8	253
	144	136	128	103	82	8x1½x28½	20x1½x4½	3x4-5/8x20	6x1-3/4x28	6½	9-7/8	285
				118	103	9x1½x28½	20x1½x4½	3x4-5/8x20	6x1-3/4x28	6½	9-5/8	279
	169	160	152	126	103	9x1½x28½	20x1½x4½	3x4-5/8x20	6x1-3/4x28	6½	9-7/8	297
			153	148	125	10x1½x28½	20x1½x4½	3x4-5/8x20	6x1-3/4x28	6½	9-7/8	309
	194	185	176	148	128	10x1-3/4x28½	20x1½x4½	3x4-3/8x20	6x2x28	6½	10-1/8	336
			197	177	151	11x1-3/4x29½	21x1½x4½	3x4-3/8x21	6x2x29	6½	10-1/8	364
	228	217	208	177	151	11x2x29½	21x1½x4½	3x4-3/8x21	6x2x29	6½	10-3/8	387
			233	200	175	12x2x29½	21x1½x4½	3x4-3/8x21	6x2x29	6½	10-3/8	404
	292	280	269	232	204	13x2½x30½	22x1½x4½	4x7-7/8x22	7x2½x30	10½	14-7/8	645
	320	308	296	258	228	14x2½x30½	22x1½x4½	4x7-7/8x22	7x2½x30	10½	14-7/8	667
	361	347	335	293	261	15x2-3/4x31½	23x1½x4½	4x7-7/8x23	7x2½x31	10½	15-1/8	747
	391	377	364	320	286	16x3x31½	23x1½x4½	4x7-7/8x23	7x2½x31	10½	15-3/8	807

*Weight does not include 2 anchor bolts @ 12#

TYPE "D" BEARINGS
(Expansion Cont.)

ALLOWABLE MOVEMENT = 2"

Bottom Flange Width	Capacity in Kips e=1"	e=1½"	e=2"	Masonry Plate	Top Plate	Web	Rocker	Radius	Height (No Lead Plate)	*Weight
21"		123	107	9x1¼x29½	21x1¼x4½	3x4-5/8x21	6x1-3/4x29	6½	9-5/8	291
	157	129	107	9x1½x29½	21x1¼x4½	3x4-5/8x21	6x1-3/4x29	6½	9-7/8	309
	159	153	129	10x1½x29½	21x1¼x4½	3x4-5/8x21	6x1-3/4x29	6½	9-7/8	322
	182	153	129	10x1-3/4x29½	21x1¼x4½	3x4-5/8x21	6x1-3/4x29	6½	10-1/8	342
	204	183	157	11x1-3/4x30½	22x1¼x4½	3x4-3/8x22	6x2x30	6½	10-1/8	379
	215	183	157	11x2x30½	22x1¼x4½	3x4-3/8x22	6x2x30	6½	10-3/8	402
		187	179	12x1-3/4x30½	22x1¼x4½	3x4-3/8x22	6x2x30	6½	10-1/8	394
	242	207	179	12x2x30½	22x1¼x4½	3x4-3/8x22	6x2x30	6½	10-3/8	419
		234	211	13x2x31½	23x1¼x4½	4x7-7/8x23	7x2x31	10	13-7/8	583
	278	240	211	13x2¼x31½	23x1¼x4½	4x7-7/8x23	7x2x31	10	14-1/8	611
	275	266	236	14x2¼x31½	23x1¼x4½	4x7-7/8x23	7x2x31	10	14-1/8	631
	306	266	236	14x2½x31½	23x1¼x4½	4x7-7/8x23	7x2x31	10	14-3/8	662
	328	302	269	15x2½x32½	24x1¼x4½	4x7-7/8x24	7x2x32	10	14-3/8	709
	346	302	269	15x2-3/4x32½	24x1¼x4½	4x7-7/8x24	7x2x32	10	14-5/8	744
	372	331	295	16x2-3/4x32½	24x1¼x4½	4x7-5/8x24	7x2¼x32	10	14-5/8	777
22"	165	159	134	10x1½x30½	22x1¼x4½	3x4-5/8x22	6x1-3/4x30	6½	9-7/8	334
	188	159	134	10x1-3/4x30½	22x1¼x4½	3x4-5/8x22	6x1-3/4x30	6½	10-1/8	356
	204	183	157	11x1-3/4x30½	22x1¼x4½	3x4-3/8x22	6x2x30	6½	10-1/8	379
	215	183	157	11x2x30½	22x1¼x4½	3x4-3/8x22	6x2x30	6½	10-3/8	402
		194	185	12x1-3/4x31½	23x1¼x4½	3x4-3/8x23	6x2x31	6½	10-1/8	408
	250	214	185	12x2x31½	23x1¼x4½	3x4-3/8x23	6x2x31	6½	10-3/8	435
		234	211	13x2x31½	23x1¼x4½	4x7-7/8x23	7x2x31	10	13-7/8	583
	278	240	211	13x2¼x31½	23x1¼x4½	4x7-7/8x23	7x2x31	10	14-1/8	611
	284	275	243	14x2¼x32½	24x1¼x4½	4x7-7/8x24	7x2x32	10	14-1/8	655
	316	275	243	14x2½x32½	24x1¼x4½	4x7-7/8x24	7x2x32	10	14-3/8	686
	328	302	269	15x2½x32½	24x1¼x4½	4x7-7/8x24	7x2x32	10	14-3/8	709
	346	302	269	15x2-3/4x32½	24x1¼x4½	4x7-7/8x24	7x2x32	10	14-5/8	744
		318	304	16x2½x33½	25x1¼x4½	4x7-5/8x25	7x2¼x33	10	14-3/8	767
	384	341	304	16x2-3/4x33½	25x1¼x4½	4x7-5/8x25	7x2¼x33	10	14-5/8	804
		362	332	17x2-3/4x33½	25x1¼x4½	4x7-5/8x25	7x2¼x33	10	14-5/8	830
	414	370	332	17x3x33½	25x1¼x4½	4x7-5/8x25	7x2¼x33	10	14-7/8	870

*Weight does not include 2 anchor bolts @ 12#

Bottom Flange Width	Capacity in Kips e=1"	e=1½"	e=2"	Masonry Plate	Top Plate	Web	Rocker	Radius	Height (No Lead Plate)	*Weight
23"	171	164	138	10x1½x31½	23x1¼x4½	3x4-5/8x23	6x1-3/4x31	6½	9-7/8	347
	195	164	138	10x1-3/4x31½	23x1¼x4½	3x4-5/8x23	6x1-3/4x31	6½	10-1/8	369
	212	189	162	11x1-3/4x31½	23x1¼x4½	3x4-3/8x23	6x2x31	6½	10-1/8	393
	222	189	162	11x2x31½	23x1¼x4½	3x4-3/8x23	6x2x31	6½	10-3/8	417
		201	191	12x1-3/4x32½	24x1¼x4½	3x4-3/8x24	6x2x32	6½	10-1/8	423
	258	221	191	12x2x32½	24x1¼x4½	3x4-3/8x24	6x2x32	6½	10-3/8	450
		242	218	13x2x32½	24x1¼x4½	4x7-7/8x24	7x2x32	10	13-7/8	604
	287	248	218	13x2¼x32½	24x1¼x4½	4x7-7/8x24	7x2x32	10	14-1/8	634
	294	283	251	14x2¼x33½	25x1¼x4½	4x7-7/8x25	7x2x33	10	14-1/8	678
	326	283	251	14x2½x33½	25x1¼x4½	4x7-7/8x25	7x2x33	10	14-3/8	711
	339	312	277	15x2½x33½	25x1¼x4½	4x7-7/8x25	7x2x33	10	14-3/8	734
	356	312	277	15x2-3/4x33½	25x1¼x4½	4x7-7/8x26	7x2x33	10	14-5/8	770
		328	313	16x2½x34½	26x1¼x4½	4x7-5/8x26	7x2¼x34	10	14-3/8	792
	397	351	313	16x2-3/4x34½	26x1¼x4½	4x7-5/8x26	7x2¼x34	10	14-5/8	831
		374	342	17x2-3/4x34½	26x1¼x4½	4x7-5/8x26	7x2¼x34	10	14-5/8	858
	428	381	342	17x3x34½	26x1¼x4½	4x7-5/8x26	7x2¼x34	10	14-7/8	899
24"	219	195	167	11x1-3/4x32½	24x1¼x4½	3x4-3/8x24	6x2x32	6½	10-1/8	407
	229	195	167	11x2x32½	24x1¼x4½	3x4-3/8x24	6x2x32	6½	10-3/8	432
		201	191	12x1-3/4x32½	24x1¼x4½	3x4-3/8x24	6x2x32	6½	10-1/8	423
	258	221	191	12x2x32½	24x1¼x4½	3x4-3/8x24	6x2x32	6½	10-3/8	450
		250	225	13x2x33½	25x1¼x4½	4x7-7/8x25	7x3x33	11	14-7/8	689
	296	255	225	13x2¼x33½	25x1¼x4½	4x7-7/8x25	7x3x33	11	15-1/8	720
	294	283	251	14x2¼x33½	25x1¼x4½	4x7-7/8x25	7x3x33	11	15-1/8	741
	326	283	251	14x2½x33½	25x1¼x4½	4x7-7/8x25	7x3x33	11	15-3/8	774
	350	321	286	15x2½x34½	26x1¼x4½	4x7-7/8x26	7x3x34	11	15-3/8	825
	367	321	286	15x2-3/4x34½	26x1¼x4½	4x7-7/8x26	7x3x34	11	15-5/8	861
		328	313	16x2½x34½	26x1¼x4½	4x7-7/8x26	7x3x34	11	15-3/8	849
	397	351	313	16x2-3/4x34½	26x1¼x4½	4x7-7/8x26	7x3x34	11	15-5/8	888
		385	352	17x2-3/4x35½	27x1¼x4½	4x7-7/8x27	7x3x35	11	15-5/8	944
	443	392	352	17x3x35½	27x1¼x4½	4x7-7/8x27	7x3x35	11	15-7/8	987
	443	424	381	18x3x35½	27x1¼x4½	4x7-7/8x27	7x3x35	11	15-7/8	1017
	477	424	381	18x3¼x35½	27x1¼x4½	4x7-7/8x27	7x3x35	11	16-1/8	1062

*Weight does not include 2 anchor bolts @ 12#

TYPE "C" BEARINGS
(Expansion Conc.)
ALLOWABLE MOVEMENT = 2"

TYPE "D" BEARINGS
(Expansion Cont.)

ALLOWABLE MOVEMENT = 2"

Bottom Flange Width	Capacity in Kips e=1"	e=1½"	e=2"	Masonry Plate	Top Plate	Web	Rocker	Radius	Height (No Lead Plate)	*Weight
25"	226	201	172	11x1-3/4x33½	25x1¼x4½	3x4-3/8x25	6x2x33	6½	10-1/8	421
	236	201	172	11x2x33½	25x1¼x4½	3x4-3/8x25	6x2x33	6½	10-3/8	447
		208	197	12x1-3/4x33½	25x1¼x4½	3x4-3/8x25	6x2x33	6½	10-1/8	438
	266	228	197	12x2x33½	25x1¼x4½	3x4-3/8x25	6x2x33	6½	10-3/8	466
		258	231	13x2x34½	26x1¼x4½	4x7-7/8x26	7x3x34	11	14-7/8	713
	304	263	231	13x2¼x34½	26x1¼x4½	4x7-7/8x26	7x3x34	11	15-1/8	744
	304	292	258	14x2¼x34½	26x1¼x4½	4x7-7/8x26	7x3x34	11	15-1/8	766
	336	292	258	14x2½x34½	26x1¼x4½	4x7-7/8x26	7x3x34	11	15-3/8	800
	361	331	294	15x2½x35½	27x1¼x4½	4x7-7/8x27	7x3x35	11	15-3/8	852
	378	331	294	15x2-3/4x35½	27x1¼x4½	4x7-7/8x27	7x3x35	11	15-5/8	889
		338	323	16x2½x35½	27x1¼x4½	4x7-7/8x27	7x3x35	11	15-3/8	877
	410	361	323	16x2-3/4x35½	27x1¼x4½	4x7-7/8x27	7x3x35	11	15-5/8	917
		397	362	17x2-3/4x36½	28x1¼x4½	4x7-7/8x28	7x3x36	11	15-5/8	974
	456	403	362	17x3x36½	28x1¼x4½	4x7-7/8x28	7x3x36	11	15-7/8	1018
	447	436	392	18x3x36½	28x1¼x4½	4x7-7/8x28	7x3x36	11	15-7/8	1049
	490	436	392	18x3¼x36½	28x1¼x4½	4x7-7/8x28	7x3x36	11	16-1/8	1095
26"		214	203	12x1-3/4x34½	26x1¼x4½	4x6-3/8x26	6x2x34	8½	12-1/8	539
	274	235	203	12x2x34½	26x1¼x4½	4x6-3/8x26	6x2x34	8½	12-3/8	568
		258	231	13x2x34½	26x1¼x4½	4x6-3/8x26	6x2x34	8½	12-3/8	588
	304	263	231	13x2¼x34½	26x1¼x4½	4x6-3/8x26	6x2x34	8½	12-5/8	619
	313	300	266	14x2¼x35½	27x1¼x4½	4x6-3/8x27	7x2x35	8½	12-5/8	676
	345	300	266	14x2½x35½	27x1¼x4½	4x6-3/8x27	7x2x35	8½	12-7/8	710
	361	331	294	15x2½x35½	27x1¼x4½	4x6-3/8x27	7x2x35	8½	12-7/8	736
	375	331	294	15x2-3/4x35½	27x1¼x4½	4x6-3/8x27	7x2x35	8½	13-1/8	773
		349	332	16x2½x36½	28x1¼x4½	4x7-7/8x28	7x3½x36	11½	15-7/8	939
	422	372	332	16x2-3/4x36½	28x1¼x4½	4x7-7/8x28	7x3½x36	11½	16-1/8	980
		397	362	17x2-3/4x36½	28x1¼x4½	4x7-7/8x28	7x3½x36	11½	16-1/8	1009
	456	403	362	17x3x36½	28x1¼x4½	4x7-7/8x28	7x3½x36	11½	16-3/8	1052
	460	448	403	18x3x37½	29x1¼x4½	4x7-7/8x29	7x3½x37	11½	16-3/8	1116
	504	448	403	18x3¼x37½	29x1¼x4½	4x7-7/8x29	7x3½x37	11½	16-5/8	1163
	511	481	435	19x3¼x37½	29x1¼x4½	4x7-7/8x29	7x3½x37	11½	16-5/8	1198
	539	481	435	19x3½x37½	29x1¼x4½	4x7-7/8x29	7x3½x37	11½	16-7/8	1248

*Weight does not include 2 anchor bolts @ 12#

Bottom Flange Width	Capacity in Kips e=1"	e=1½"	e=2"	Masonry Plate	Top Plate	Web	Rocker	Radius	Height (No Lead Plate)	*Weight
27"		267	238	13x2x35½	27x1¼x4½	4x6-3/8x27	6x2x35	8½	12-3/8	607
	313	271	238	13x2¼x35½	27x1¼x4½	4x6-3/8x27	6x2x35	8½	12-5/8	640
	313	300	266	14x2½x35½	27x1¼x4½	4x6-3/8x27	6x2x35	8½	12-5/8	662
	345	300	266	14x2½x35½	27x1¼x4½	4x6-3/8x27	6x2x35	8½	12-7/8	697
	372	340	302	15x2½x36½	28x1¼x4½	4x6-1/8x28	7x2¼x36	8½	12-7/8	768
	387	340	302	15x2-3/4x36½	28x1¼x4½	4x6-1/8x28	7x2¼x36	8½	13-1/8	806
		349	332	16x2½x36½	28x1¼x4½	4x7-7/8x28	7x4½x36	12½	16-7/8	1008
	422	372	332	16x2-3/4x36½	28x1¼x4½	4x7-7/8x28	7x4½x36	12½	17-1/8	1049
		409	372	17x2-3/4x37½	29x1¼x4½	4x7-7/8x29	7x4½x37	12½	17-1/8	1110
	469	415	372	17x3x37½	29x1¼x4½	4x7-7/8x29	7x4½x37	12½	17-3/8	1155
	460	448	403	18x3x37½	29x1¼x4½	4x7-7/8x29	7x4½x37	12½	17-3/8	1187
	504	448	403	18x3¼x37½	29x1¼x4½	4x7-7/8x29	7x4½x37	12½	17-5/8	1235
	526	494	446	19x3¼x38½	30x1¼x4½	4x7-7/8x30	7x4½x38	12½	17-5/8	1306
	553	494	446	19x3½x38½	30x1¼x4½	4x7-7/8x30	7x4½x38	12½	17-7/8	1357
	580	529	479	20x3½x38½	30x1¼x4½	4x7-7/8x30	7x4½x38	12½	17-7/8	1396
	590	529	479	20x3-3/4x38½	30x1¼x4½	4x7-7/8x30	7x4½x38	12½	18-1/8	1450

*Weight does not include 2 anchor bolts @ 12#

TYPE "D" BEARINGS
(Expansion Cont.)

ALLOWABLE MOVEMENT = 2½" and 3"

Bottom Flange Width	Capacity in Kips e=2 1/2"	e=3"	Masonry Plate	Top Plate	Web	Rocker	Radius	Height (No Lead Plate)	*Weight
8"	34	21	8x1x16-1/2	8x1-1/4x4-1/2	4x4-1/8x8	7x2-1/4x16	6½	9-3/8	144
	49	36	9x1-1/4x17-1/2	9x1-1/4x4-1/2	4x4-1/8x9	7x2-1/4x17	6½	9-5/8	172
	65	52	10x1-1/4x18-1/2	10x1-1/4x4-1/2	4x4-1/8x10	7x2-1/4x18	6½	9-5/8	192
	84	70	11x1-1/2x19-1/2	11x1-1/4x4-1/2	4x4-1/8x11	7x2-1/4x19	6½	9-7/8	228
	99	84	12x1-3/4x19-1/2	11x1-1/4x4-1/2	4x4-1/8x11	7x2-1/4x19	6½	10-1/8	252
9"	36	23	8x1x17-1/2	9x1-1/4x4-1/2	4x4-1/8x9	7x2-1/4x17	6½	9-3/8	156
	52	38	9x1-1/4x18-1/2	10x1-1/4x4-1/2	4x4-1/8x10	7x2-1/4x18	6½	9-5/8	186
	70	55	10x1-1/4x19-1/2	11x1-1/4x4-1/2	4x4-1/8x11	7x2-1/4x19	6½	9-5/8	206
	84	70	11x1-1/2x19-1/2	11x1-1/4x4-1/2	4x4-1/8x11	7x2-1/4x19	6½	9-7/8	228
	104	89	12x1-3/4x20-1/2	12x1-1/4x4-1/2	4x4-1/8x12	7x2-1/4x20	6½	10-1/8	269
	119	104	13x2x20-1/2	12x1-1/4x4-1/2	4x4-1/8x12	7x2-1/4x20	6½	10-3/8	297
10"	38	24	8x1x18-1/2	10x1-1/4x4-1/2	4x4-1/8x10	7x2-1/4x18	6½	9-3/8	169
	55	40	9x1-1/4x19-1/2	11x1-1/4x4-1/2	4x4-1/8x11	7x2-1/4x19	6½	9-5/8	199
	73	58	10x1-1/4x20-1/2	12x1-1/4x4-1/2	4x4-1/8x12	7x2-1/4x20	6½	9-5/8	220
	89	73	11x1-1/2x20-1/2	12x1-1/4x4-1/2	4x4-1/8x12	7x2-1/4x20	6½	9-7/8	243
	109	93	12x1-3/4x21-1/2	13x1-1/4x4-1/2	4x4-1/8x13	7x2-1/4x21	6½	10-1/8	285
	126	109	13x2x21-1/2	13x1-1/4x4-1/2	4x4-1/8x13	7x2-1/4x21	6½	10-3/8	315
11"	40	26	8x1x19-1/2	11x1-1/4x4-1/2	4x4-1/8x11	7x2-1/4x19	6½	9-3/8	182
	58	43	9x1-1/4x20-1/2	12x1-1/4x4-1/2	4x4-1/8x12	7x2-1/4x20	6½	9-5/8	213
	73	58	10x1-1/4x20-1/2	12x1-1/4x4-1/2	4x4-1/8x12	7x2-1/4x20	6½	9-5/8	220
	93	77	11x1-1/2x21-1/2	13x1-1/4x4-1/2	4x4-1/8x13	7x2-1/4x21	6½	9-7/8	258
	109	93	12x1-3/4x21-1/2	13x1-1/4x4-1/2	4x4-1/8x13	7x2-1/4x21	6½	10-1/8	285
	131	115	13x2x22-1/2	14x1-1/4x4-1/2	4x4-1/8x14	7x2-1/4x22	6½	10-3/8	333
	148	132	14x2x22-1/2	14x1-1/4x4-1/2	4x4-1/8x14	7x2-1/4x22	6½	10-3/8	345
12"	43	27	8x1x20-1/2	12x1-1/4x4-1/2	4x4-1/8x12	7x2-1/4x20	6½	9-3/8	193
	58	43	9x1-1/4x20-1/2	12x1-1/4x4-1/2	4x4-1/8x12	7x2-1/4x20	6½	9-5/8	213
	77	61	10x1-1/4x21-1/2	13x1-1/4x4-1/2	4x4-1/8x13	7x2-1/4x21	6½	9-5/8	234
	93	77	11x1-1/2x21-1/2	13x1-1/4x4-1/2	4x4-1/8x13	7x2-1/4x21	6½	9-7/8	258
	115	98	12x1-3/4x22-1/2	14x1-1/4x4-1/2	4x4-1/8x14	7x2-1/4x22	6½	10-1/8	301
	131	115	13x2x22-1/2	14x1-1/4x4-1/2	4x4-1/8x14	7x2-1/4x22	6½	10-3/8	333
	155	138	14x2x23-1/2	15x1-1/4x4-1/2	4x4-1/8x15	7x2-1/4x23	6½	10-3/8	364
	175	155	15x2-1/4x23-1/2	15x1-1/4x4-1/2	4x4-1/8x15	7x2-1/4x23	6½	10-5/8	402

*Weight does not include 2 anchor bolts @ 12#

Bottom Flange Width	Capacity in Kips e=2 1/2"	e=3"	Masonry Plate	Top Plate	Web	Rocker	Radius	Height (No Lead Plate)	*Weight
13"	45	29	8x1x21-1/2	13x1-1/4x4-1/2	4x4-1/8x13	7x2-1/4x21	6½	9-3/8	207
	61	45	9x1-1/4x21-1/2	13x1-1/4x4-1/2	4x4-1/8x13	7x2-1/4x21	6½	9-5/8	226
	81	64	10x1-1/4x22-1/2	14x1-1/4x4-1/2	4x4-1/8x14	7x2-1/4x22	6½	9-5/8	248
	98	81	11x1-1/2x22-1/2	14x1-1/4x4-1/2	4x4-1/8x14	7x2-1/4x22	6½	9-7/8	273
	120	102	12x1-3/4x23-1/2	15x1-1/4x4-1/2	4x4-1/8x15	7x2-1/4x23	6½	10-1/8	317
	138	120	13x2x23-1/2	15x1-1/4x4-1/2	4x4-1/8x15	7x2-1/4x23	6½	10-3/8	350
	162	144	14x2x24-1/2	16x1-1/4x4-1/2	4x4-1/8x16	7x2-1/4x24	6½	10-3/8	382
	182	162	15x2-1/4x24-1/2	16x1-1/4x4-1/2	4x4-1/8x16	7x2-1/4x24	6½	10-5/8	422
14"	64	47	9x1-1/4x22-1/2	14x1-1/4x4-1/2	4x4-1/8x14	7x2-1/4x22	6½	9-5/8	240
	81	64	10x1-1/4x22-1/2	14x1-1/4x4-1/2	4x4-1/8x14	7x2-1/4x22	6½	9-5/8	248
	102	85	11x1-1/2x23-1/2	15x1-1/4x4-1/2	4x4-1/8x15	7x2-1/4x23	6½	9-7/8	288
	120	102	12x1-3/4x23-1/2	15x1-1/4x4-1/2	4x4-1/8x15	7x2-1/4x23	6½	10-1/8	317
	144	125	13x2x24-1/2	16x1-1/4x4-1/2	4x4-1/8x16	7x2-1/4x24	6½	10-3/8	368
	162	143	14x2x24-1/2	16x1-1/4x4-1/2	4x4-1/8x16	7x2-1/4x24	6½	10-3/8	382
	190	169	15x2-1/4x25-1/2	17x1-1/4x4-1/2	4x4-1/8x17	7x2-1/4x25	6½	10-5/8	441
	209	188	16x2-1/2x25-1/2	17x1-1/4x4-1/2	4x4-7/8x17	7x2-1/2x25	7½	11-7/8	515
15"	67	49	9x1-1/4x23-1/2	15x1-1/4x4-1/2	4x4-1/8x15	7x2-1/4x23	6½	9-5/8	253
	85	67	10x1-1/4x23-1/2	15x1-1/4x4-1/2	4x4-1/8x15	7x2-1/4x23	6½	9-5/8	262
	107	88	11x1-1/2x24-1/2	16x1-1/4x4-1/2	4x4-1/8x16	7x2-1/4x24	6½	9-7/8	284
	125	107	12x1-3/4x24-1/2	16x1-1/4x4-1/2	4x4-1/8x16	7x2-1/4x24	6½	10-1/8	334
	149	130	13x2x25-1/2	17x1-1/4x4-1/2	4x4-1/8x17	7x2-1/4x25	6½	10-3/8	386
	169	150	14x2x25-1/2	17x1-1/4x4-1/2	4x4-1/8x17	7x2-1/4x25	6½	10-3/8	400
	197	175	15x2-1/4x26-1/2	18x1-1/4x4-1/2	4x4-1/8x18	7x2-1/4x26	6½	10-5/8	461
	217	195	16x2-1/2x26-1/2	18x1-1/4x4-1/2	4x4-7/8x18	7x2-1/2x26	7½	11-7/8	538
16"	88	70	10x1-1/4x24-1/2	16x1-1/4x4-1/2	4x4-1/8x16	7x2-1/4x24	6½	9-5/8	275
	107	88	11x1-1/2x24-1/2	16x1-1/4x4-1/2	4x4-1/8x16	7x2-1/4x24	6½	9-7/8	303
	130	111	12x1-3/4x25-1/2	17x1-1/4x4-1/2	4x4-1/8x17	7x2-1/4x25	6½	10-1/8	350
	149	130	13x2x25-1/2	17x1-1/4x4-1/2	4x4-1/8x17	7x2-1/4x25	6½	10-3/8	386
	175	156	14x2x26-1/2	18x1-1/4x4-1/2	4x4-1/8x18	7x2-1/4x26	6½	10-3/8	418
	195	175	15x2-1/4x26-1/2	18x1-1/4x4-1/2	4x4-1/8x18	7x2-1/4x26	6½	10-5/8	461
	225	203	16x2-1/2x27-1/2	19x1-1/4x4-1/2	4x4-7/8x19	7x2-1/2x27	7½	11-7/8	561
	246	223	17x2-3/4x27-1/2	19x1-1/4x4-1/2	4x4-7/8x19	7x2-1/2x27	7½	12-1/8	613

*Weight does not include 2 anchor bolts @ 12#

TYPE "DU" BEARINGS
(Expansion Cont.)
MOVEMENT = 2½" and 3"

Bottom Flange Width	Capacity in Kips e=2 1/2"	e=3"	Masonry Plate	Top Plate	Web	Rocker	Radius	Height (No Lead Plate)	*Weight
17"	92	73	10x1-1/4x25-1/2	17x1-1/4x4-1/2	4x4-1/8x17	7x2-1/4x25	6½	9-5/8	289
	111	92	11x1-1/2x25-1/2	17x1-1/4x4-1/2	4x4-1/8x17	7x2-1/4x25	6½	9-7/8	318
	136	116	12x1-3/4x26-1/2	18x1-1/4x4-1/2	4x4-1/8x18	7x2-1/4x26	6½	10-1/8	366
	156	136	13x2x26-1/2	18x1-1/4x4-1/2	4x4-1/8x18	7x2-1/4x26	6½	10-3/8	403
	182	162	14x2x27-1/2	19x1-1/4x4-1/2	4x4-1/8x19	7x2-1/4x27	6½	10-3/8	437
	205	182	15x2-1/4x27-1/2	19x1-1/4x4-1/2	4x4-1/8x19	7x2-1/4x27	6½	10-5/8	481
	234	210	16x2-1/2x28-1/2	20x1-1/4x4-1/2	4x4-7/8x20	7x2-1/2x28	7½	11-7/8	584
	256	232	17x2-3/4x28-1/2	20x1-1/4x4-1/2	4x4-7/8x20	7x2-1/2x28	7½	12-1/8	638
18"	96	76	10x1-1/4x26-1/2	18x1-1/4x4-1/2	4x4-1/8x18	7x2-1/4x26	6½	9-5/8	299
	116	96	11x1-1/2x26-1/2	18x1-1/4x4-1/2	4x4-1/8x18	7x2-1/4x26	6½	9-7/8	329
	141	120	12x1-3/4x27-1/2	19x1-1/4x4-1/2	4x4-1/8x19	7x2-1/4x27	6½	10-1/8	379
	162	141	13x2x27-1/2	19x1-1/4x4-1/2	4x4-1/8x19	7x2-1/4x27	6½	10-3/8	417
	189	168	14x2x28-1/2	20x1-1/4x4-1/2	4x4-1/8x20	7x2-1/4x28	6½	10-3/8	451
	212	189	15x2-1/4x28-1/2	20x1-1/4x4-1/2	4x4-1/8x20	7x2-1/4x28	6½	10-5/8	497
	242	218	16x2-1/2x29-1/2	21x1-1/4x4-1/2	4x4-7/8x21	7x2-1/2x29	7½	11-7/8	603
	265	240	17x2-3/4x29-1/2	21x1-1/4x4-1/2	4x4-7/8x21	7x2-1/2x29	7½	12-1/8	659
19"	100	79	10x1-1/4x27-1/2	19x1-1/4x4-1/2	4x4-1/8x19	7x2-1/4x27	6½	9-5/8	317
	120	100	11x1-1/2x27-1/2	19x1-1/4x4-1/2	4x4-1/8x19	7x2-1/4x27	6½	9-7/8	348
	146	125	12x1-3/4x28-1/2	20x1-1/4x4-1/2	4x4-1/8x20	7x2-1/4x28	6½	10-1/8	399
	168	146	13x2x28-1/2	20x1-1/4x4-1/2	4x4-1/8x20	7x2-1/4x28	6½	10-3/8	439
	196	174	14x2x29-1/2	21x1-1/4x4-1/2	4x4-1/8x21	7x2-1/4x29	6½	10-3/8	473
	218	196	15x2-1/4x29-1/2	21x1-1/4x4-1/2	4x4-1/8x21	7x2-1/4x29	6½	10-5/8	521
	250	225	16x2-1/2x30-1/2	22x1-1/4x4-1/2	4x4-7/8x22	7x2-1/2x30	7½	11-7/8	630
	274	248	17x2-3/4x30-1/2	22x1-1/4x4-1/2	4x4-7/8x22	7x2-1/2x30	7½	12-1/8	688
20"	103	82	10x1-1/4x28-1/2	20x1-1/4x4-1/2	4x4-1/8x20	7x2-1/4x28	6½	9-5/8	331
	125	103	11x1-1/2x28-1/2	20x1-1/4x4-1/2	4x4-1/8x20	7x2-1/4x28	6½	9-7/8	341
	151	129	12x1-3/4x29-1/2	21x1-1/4x4-1/2	4x4-1/8x21	7x2-1/4x29	6½	10-1/8	415
	174	151	13x2x29-1/2	21x1-1/4x4-1/2	4x4-1/8x21	7x2-1/4x29	6½	10-3/8	457
	202	180	14x2x30-1/2	22x1-1/4x4-1/2	4x4-1/8x22	7x2-1/4x30	6½	10-3/8	491
	227	202	15x2-1/4x30-1/2	22x1-1/4x4-1/2	4x4-1/8x22	7x2-1/4x30	6½	10-5/8	541
	258	233	16x2-1/2x31-1/2	23x1-1/4x4-1/2	4x4-7/8x23	7x2-1/2x31	7½	11-7/8	653
	283	256	17x2-3/4x31-1/2	23x1-1/4x4-1/2	4x4-7/8x23	7x2-1/2x31	7½	12-1/8	713

*Weight does not include 2 anchor bolts @ 12#

TYPE "D" BEARINGS
(Expansion Cont.)

ALLOWABLE MOVEMENT = 2½" and 3"

Bottom Flange Width	Capacity in Kips e=2½"	e=3"	Masonry Plate	Top Plate	Web	Rocker	Radius	Height (No Lead Plate)	*Weight
21"	129	107	11x1-1/2x29½	21x1¼x4½	4x4-1/8x21	7x2-1/4x29	6½	9-7/8	378
	151	129	12x1-3/4x29½	21x1¼x4½	4x4-1/8x21	7x2-1/4x29	6½	10-1/8	415
	179	157	13x2x30½	22x1¼x4½	4x4-1/8x22	7x2-1/4x30	6½	10-3/8	474
	202	180	14x2x30½	22x1¼x4½	4x4-1/8x22	7x2-1/4x30	6½	10-3/8	491
	233	209	15x2-1/4x31½	23x1¼x4½	4x4-1/8x23	7x2-1/4x31	6½	10-5/8	561
	258	233	16x2-1/2x31½	23x1¼x4½	4x5-1/8x23	7x2-3/4x31	8	12-3/8	675
	292	265	17x2-3/4x32½	24x1¼x4½	4x5-1/8x24	7x2-3/4x32	8	12-5/8	761
	317	289	18x2-3/4x32½	24x1¼x4½	4x5-1/8x24	7x2-3/4x32	8	12-5/8	786
22"	134	111	11x1-1/2x30½	22x1¼x4½	4x4-1/8x22	7x2-1/4x30	6½	9-7/8	393
	157	134	12x1-3/4x30½	22x1¼x4½	4x4-1/8x22	7x2-1/4x30	6½	10-1/8	431
	185	162	13x2x31½	23x1¼x4½	4x4-1/8x23	7x2-1/4x31	6½	10-3/8	492
	209	185	14x2x31½	23x1¼x4½	4x4-1/8x23	7x2-1/4x31	6½	10-3/8	510
	240	216	15x2-1/4x32½	24x1¼x4½	4x4-1/8x24	7x2-1/4x32	6½	10-5/8	581
	267	240	16x2-1/2x32½	24x1¼x4½	4x5-1/8x24	7x2-3/4x32	8	12-3/8	699
	301	273	17x2-1/2x33½	25x1¼x4½	4x5-1/8x25	7x2-3/4x33	8	12-3/8	747
	327	298	18x2-3/4x33½	25x1¼x4½	4x5-1/8x25	7x2-3/4x33	8	12-5/8	813
23"	162	138	12x1-3/4x31½	23x1¼x4½	4x4-1/8x23	7x2-1/4x31	6½	10-1/8	448
	185	162	13x2x31½	23x1¼x4½	4x4-1/8x23	7x2-1/4x31	6½	10-3/8	492
	216	191	14x2x32½	24x1¼x4½	4x4-1/8x24	7x2-1/4x32	6½	10-3/8	528
	240	216	15x2-1/4x32½	24x1¼x4½	4x4-1/8x24	7x2-1/4x32	6½	10-5/8	581
	269	248	16x2-1/2x33½	25x1¼x4½	4x4-1/8x25	7x2-1/4x33	6½	10-7/8	659
	301	273	17x2-1/2x33½	25x1¼x4½	4x5-3/8x25	7x3x33	8½	12-7/8	771
	337	307	18x2-3/4x34½	26x1¼x4½	4x5-3/8x26	7x3x34	8½	13-1/8	864
	364	335	19x3x34½	26x1¼x4½	4x5-3/8x26	7x3x34	8½	13-3/8	937
24"	167	143	12x1-3/4x32½	24x1¼x4½	4x4-1/8x24	7x2-1/4x32	6½	10-1/8	464
	191	167	13x2x32½	24x1¼x4½	4x4-1/8x24	7x2-1/4x32	6½	10-3/8	510
	223	197	14x2x33½	25x1¼x4½	4x4-1/8x25	7x2-1/4x33	6½	10-3/8	546
	248	223	15x2-1/4x33½	25x1¼x4½	4x4-1/8x25	7x2-1/4x33	6½	10-5/8	600
	278	255	16x2-1/2x34½	26x1¼x4½	4x4-1/8x26	7x2-1/4x34	6½	10-7/8	681
	309	281	17x2-1/2x34½	26x1¼x4½	4x5-3/8x26	7x3x34	8½	12-7/8	796
	347	316	18x2-3/4x35½	27x1¼x4½	4x5-3/8x27	7x3x35	8½	13-1/8	892
	375	345	19x3x35½	27x1¼x4½	4x5-3/8x27	7x3x35	8½	13-3/8	967

*Weight does not include 2 anchor bolts @ 12#

TYPE "D" BEARINGS
(Expansion Cont.)

ALLOWABLE MOVEMENT = 2½" and 3"

Bottom Flange Width	Capacity in Kips e=2½"	e=3"	Masonry Plate	Top Plate	Web	Rocker	Radius	Height (No Lead Plate)	*Weight
25"	197	172	13x2x33½	25x1¼x4½	4x4-1/8x25	7x2-1/4x33	6½	10-3/8	527
	223	197	14x2x33½	25x1¼x4½	4x4-1/8x25	7x2-1/4x33	6½	10-3/8	546
	255	229	15x2-1/4x34½	26x1¼x4½	4x4-1/8x26	7x2-1/4x34	6½	10-5/8	620
	278	255	16x2-1/2x34½	26x1¼x4½	4x4-1/8x26	7x2-1/4x34	6½	10-7/8	681
	319	289	17x2-1/2x35½	27x1¼x4½	4x5-7/8x27	7x3x35	9	13-3/8	838
	347	316	18x2-3/4x35½	27x1¼x4½	4x5-7/8x27	7x3x35	9	13-5/8	908
	386	354	19x3x36½	28x1¼x4½	4x5-7/8x28	7x3x36	9	13-7/8	1013
	410	382	20x3-1/4x36½	28x1¼x4½	4x5-7/8x28	7x3x36	9	14-1/8	1095
26"	203	178	13x2x34½	26x1¼x4½	4x4-1/8x26	7x2-1/4x34	6½	10-3/8	545
	229	203	14x2x34½	26x1¼x4½	4x4-1/8x26	7x2-1/4x34	6½	10-3/8	564
	263	236	15x2-1/4x35½	27x1¼x4½	4x4-1/8x27	7x2-1/4x35	6½	10-5/8	640
	287	263	16x2-1/2x35½	27x1¼x4½	4x4-1/8x27	7x2-1/4x35	6½	10-7/8	703
	328	298	17x2-1/2x36½	28x1¼x4½	4x5-7/8x28	7x3x36	9	13-3/8	864
	356	325	18x2-3/4x36½	28x1¼x4½	4x5-7/8x28	7x3x36	9	13-7/8	936
	396	364	19x3x37½	29x1¼x4½	4x5-7/8x29	7x3x37	9	13-7/8	1043
	422	393	20x3-1/4x37½	29x1¼x4½	4x5-7/8x29	7x3x37	9	14-1/8	1128
27"	236	209	14x2x35½	27x1¼x4½	4x4-1/8x27	7x2-1/4x35	6½	10-3/8	583
	263	236	15x2-1/4x35½	27x1¼x4½	4x4-1/8x27	7x2-1/4x35	6½	10-5/8	640
	296	270	16x2-1/2x36½	28x1¼x4½	4x4-1/8x28	7x2-1/4x36	6½	10-7/8	724
	328	298	17x2-1/2x36½	28x1¼x4½	4x6-3/8x28	7x3-1/2x36	10	14-3/8	915
	366	334	18x2-3/4x37½	29x1¼x4½	4x6-3/8x29	7x3-1/2x37	10	14-5/8	1017
	396	364	19x3x37½	29x1¼x4½	4x6-3/8x29	7x3-1/2x37	10	14-7/8	1096
	438	403	20x3-1/4x38½	30x1¼x4½	4x6-3/8x30	7x3-1/2x38	10	15-1/8	1215
	470	433	21x3-1/4x38½	30x1¼x4½	4x6-3/8x30	7x3-1/2x38	10	15-1/8	1251

*Weight does not include 2 anchor bolts @ 12#

TYPE "D" BEARINGS
FIXED

FIXED BEARINGS

Value of "P" controlled by Masonry Pressure "Pc" = $\frac{bL-3.53}{1+3/b}$

Above formula based on an assumed eccentricity of load = ½".

Value of "P" controlled by steel stress;

MOMENT M1 "Ps" = $\frac{f_s t^2(bL-3.53)}{36.75}$ MOMENT M2 "Ps" = $\frac{f_s t^2(bL-3.53)}{3(b/2-1.5)^2}$

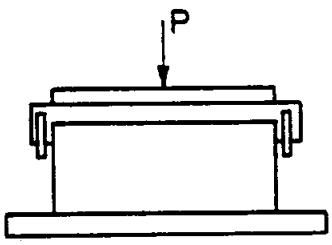

M 1

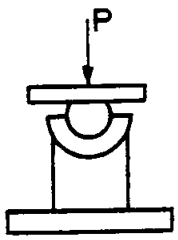

M2

* Length of top plate shall not be less than out to out dimensions of stiffener plates. (Normal to Web)

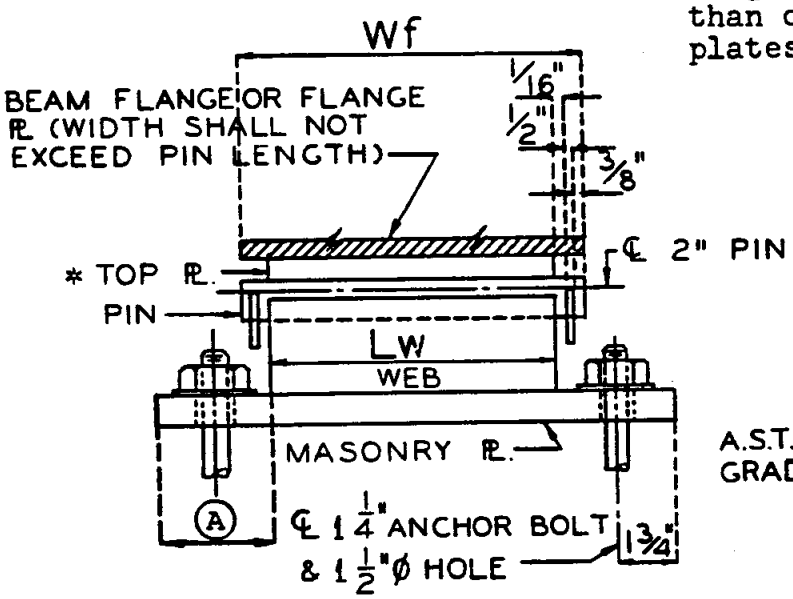

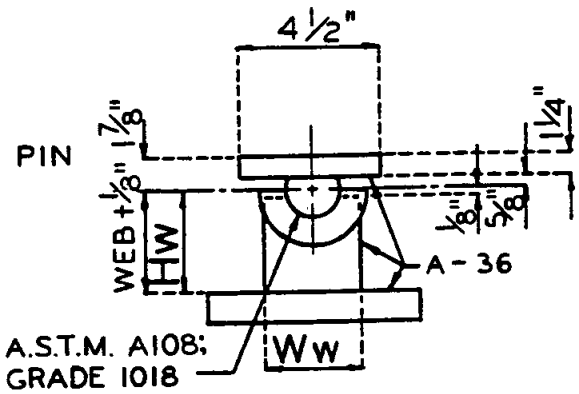

ANCHOR BOLTS:

Spans thru 150' ..... 1¼" A.B.

Spans over 150' ..... 1½" A.B.

All 2 Girder Designs ..... 1½" A.B.

NOTES TO DESIGNER:

1. Lw ≤ Wf + 3"
2. Hw ≈ Ww
3. If Ww exceeds 4", use 3" Pin.
4. Masonry PL thickness shall be in increments of ¼".
5. Hw = 2-3/4" mininum when 1-1/2" anchor bolts are used.

(A) Tables for Type "D" Fixed bearings based on this dimension being equal to 4".

F

TYPE D BEARINGS
FIXED (CONT.)

BOTTOM FLANGE WIDTH OR BEAM DEPTH	TOP PLATE	WEB	MASONRY PLATE	P	HEIGHT (NO LEAD PLATE)	*WEIGHT
8" or W21	9x1¼x4½	3x3x9	8x1x17	72	6	81
	9x1¼x4½	3x3x9	8x1¼x17	96	6¼	90
	9x1¼x4½	3x3x9	9x1x17	81	6	85
	9x1¼x4½	3x3x9	9x1¼x17	112	6¼	96
	9x1¼x4½	3x3x9	10x1¼x17	128	6¼	102
	9x1¼x4½	3x3x9	11x1½x17	144	6½	121
9" or W24	10x1¼x4½	3x3x10	8x1x18	76	6	87
	10x1¼x4½	3x3x10	8x1¼x18	102	6¼	97
	10x1¼x4½	3x3x10	9x1x18	86	6	93
	10x1¼x4½	3x3x10	9x1¼x18	119	6¼	104
	10x1¼x4½	3x3x10	10x1¼x18	136	6¼	110
	10x1¼x4½	3x3x10	11x1½x18	153	6½	130
	10x1¼x4½	3x3x10	12x1½x18	157	6½	138
	10x1¼x4½	3x3x10	12x1-3/4x18	170	6-3/4	153
10" or W27	11x1¼x4½	3x3x11	8x1x19	81	6	94
	11x1¼x4½	3x3x11	8x1¼x19	108	6¼	105
	11x1¼x4½	3x3x11	9x1x19	91	6	100
	11x1¼x4½	3x3x11	9x1¼x19	126	6¼	111
	11x1¼x4½	3x3x11	10x1¼x19	143	6¼	118
	11x1¼x4½	3x3x11	11x1½x19	161	6½	139
	11x1¼x4½	3x3x11	12x1½x19	166	6½	148
	11x1¼x4½	3x3x11	12x1-3/4x19	180	6-3/4	163
11" or W30	12½x1¼x4½	3x3-7/8x12½	8x1x20½	87	6-7/8	114
	12½x1¼x4½	3x3-5/8x12½	8x1¼x20½	117	6-7/8	122
	12½x1¼x4½	3x3-7/8x12½	9x1x20½	98	6-7/8	119
	12½x1¼x4½	3x3-5/8x12½	9x1¼x20½	136	6-7/8	130
	12½x1¼x4½	3x3-5/8x12½	10x1¼x20½	155	6-7/8	137
	12½x1¼x4½	3x3-3/8x12½	11x1½x20½	174	6-7/8	157
	12½x1¼x4½	3x3-3/8x12½	12x1½x20½	180	6-7/8	166
	12½x1¼x4½	3x3-1/8x12½	12x1-3/4x20½	194	6-7/8	180
	12½x1¼x4½	3x3-1/8x12½	13x1-3/4x20½	214	6-7/8	190
12" or W33	13x1¼x4½	3x3-7/8x13	8x1x21	90	6-7/8	118
	13x1¼x4½	3x3-5/8x13	8x1¼x21	120	6-7/8	126
	13x1¼x4½	3x3-7/8x13	9x1x21	101	6-7/8	123
	13x1¼x4½	3x3-5/8x13	9x1¼x21	139	6-7/8	134
	13x1¼x4½	3x3-5/8x13	10x1¼x21	159	6-7/8	141
	13x1¼x4½	3x3-3/8x13	11x1½x21	179	6-7/8	162
	13x1¼x4½	3x3-3/8x13	12x1½x21	184	6-7/8	171
	13x1¼x4½	3x3-1/8x13	12x1-3/4x21	199	6-7/8	186
	13x1¼x4½	3x3-1/8x13	13x1-3/4x21	219	6-7/8	196
	13x1¼x4½	3x2-7/8x13	14x2x21	239	6-7/8	224

*Weight does not include 2 anchor bolts @ 12#

TYPE D BEARINGS
FIXED (CONT.)

BOTTOM FLANGE WIDTH OR BEAM DEPTH	TOP PLATE	WEB	MASONRY PLATE	P	HEIGHT (NO LEAD PLATE)	*WEIGHT
13" or W36	14x1¼x4½	3x3-7/8x14	8x1x22	94	6-7/8	125
	14x1¼x4½	3x3-5/8x14	8x1¼x22	125	6-7/8	134
	14x1¼x4½	3x3-7/8x14	9x1x22	106	6-7/8	131
	14x1¼x4½	3x3-5/8x14	9x1¼x22	146	6-7/8	142
	14x1¼x4½	3x3-5/8x14	10x1¼x22	167	6-7/8	150
	14x1¼x4½	3x3-3/8x14	11x1½x22	187	6-7/8	172
	14x1¼x4½	3x3-3/8x14	12x1½x22	193	6-7/8	181
	14x1¼x4½	3x3-1/8x14	12x1-3/4x22	208	6-7/8	196
	14x1¼x4½	3x3-1/8x14	13x1-3/4x22	230	6-7/8	207
	14x1¼x4½	3x2-7/8x14	14x2x22	251	6-7/8	237
14"	15x1¼x4½	3x3-7/8x15	8x1x23	98	6-7/8	133
	15x1¼x4½	3x3-5/8x15	8x1¼x23	131	6-7/8	142
	15x1¼x4½	3x3-7/8x15	9x1x23	111	6-7/8	139
	15x1¼x4½	3x3-5/8x15	9x1¼x23	153	6-7/8	150
	15x1¼x4½	3x3-5/8x15	10x1¼x23	174	6-7/8	159
	15x1¼x4½	3x3-3/8x15	11x1½x23	196	6-7/8	181
	15x1¼x4½	3x3-3/8x15	12x1½x23	202	6-7/8	200
	15x1¼x4½	3x3-1/8x15	12x1-3/4x23	218	6-7/8	207
	15x1¼x4½	3x3-1/8x15	13x1-3/4x23	240	6-7/8	218
	15x1¼x4½	3x2-7/8x15	14x2x23	262	6-7/8	249
	15x1¼x4½	3x2-5/8x15	15x2-1/4x23	285	6-7/8	283
15"	16x1¼x4½	3x3-7/8x16	8x1x24	103	6-7/8	140
	16x1¼x4½	3x3-5/8x16	8x1¼x24	137	6-7/8	150
	16x1¼x4½	3x3-7/8x16	9x1x24	116	6-7/8	147
	16x1¼x4½	3x3-5/8x16	9x1¼x24	159	6-7/8	159
	16x1¼x4½	3x3-5/8x16	10x1¼x24	182	6-7/8	167
	16x1¼x4½	3x3-3/8x16	11x1½x24	205	6-7/8	191
	16x1¼x4½	3x3-3/8x16	12x1½x24	211	6-7/8	201
	16x1¼x4½	3x3-1/8x16	12x1-3/4x24	228	6-7/8	218
	16x1¼x4½	3x3-1/8x16	13x1-3/4x24	251	6-7/8	230
	16x1¼x4½	3x2-7/8x16	14x2x24	274	6-7/8	262
	16x1¼x4½	3x2-5/8x16	15x2¼x24	297	6-7/8	297
16"	17x1¼x4½	3x3-7/8x17	8x1x25	107	6-7/8	148
	17x1¼x4½	3x3-5/8x17	8x1¼x25	143	6-7/8	158
	17x1¼x4½	3x3-7/8x17	9x1x25	121	6-7/8	155
	17x1¼x4½	3x3-5/8x17	9x1¼x25	166	6-7/8	167
	17x1¼x4½	3x3-5/8x17	10x1¼x25	190	6-7/8	176
	17x1¼x4½	3x3-3/8x17	11x1½x25	213	6-7/8	200
	17x1¼x4½	3x3-3/8x17	12x1½x25	220	6-7/8	211
	17x1¼x4½	3x3-1/8x17	12x1-3/4x25	237	6-7/8	228
	17x1¼x4½	3x3-1/8x17	13x1-3/4x25	261	[illegible]-7/8	241
	17x1¼x4½	3x2-7/8x17	14x2x25	285	[illegible]-7/8	274
	17x1¼x4½	3x2-5/8x17	15x2-1/4x25	310	6-7/8	311

*Weight does not include 2 anchor bolts @ 12#

TYPE D BEARINGS
FIXED (CONT.)

BOTTOM FLANGE WIDTH	TOP PLATE	WEB	MASONRY PLATE	P	HEIGHT (NO LEAD PLATE)	*WEIGHT
17"	18x1¼x4½	3x3-7/8x18	8x1x26	111	6-7/8	155
	18x1¼x4½	3x3-5/8x18	8x1¼x26	149	6-7/8	166
	18x1¼x4½	3x3-7/8x18	9x1x26	125	6-7/8	163
	18x1¼x4½	3x3-5/8x18	9x1¼x26	173	6-7/8	175
	18x1¼x4½	3x3-5/8x18	10x1¼x26	197	6-7/8	184
	18x1¼x4½	3x3-3/8x18	11x1½x26	222	6-7/8	210
	18x1¼x4½	3x3-3/8x18	12x1½x26	229	6-7/8	221
	18x1¼x4½	3x3-1/8x18	12x1-3/4x26	247	6-7/8	239
	18x1¼x4½	3x3-1/8x18	13x1-3/4x26	272	6-7/8	252
	18x1¼x4½	3x2-7/8x18	14x2x26	297	6-7/8	286
	18x1¼x4½	3x2-5/8x18	15x2¼x26	322	6-7/8	325
	18x1¼x4½	3x2-5/8x18	16x2¼x26	329	6-7/8	341
	18x1¼x4½	3x2-3/8x18	16x2½x26	347	6-7/8	367
18"	19x1¼x4½	3x3-7/8x19	8x1x27	116	6-7/8	163
	19x1¼x4½	3x3-5/8x19	8x1¼x27	155	6-7/8	174
	19x1¼x4½	3x3-7/8x19	9x1x27	130	6-7/8	170
	19x1¼x4½	3x3-5/8x19	9x1¼x27	180	6-7/8	183
	19x1¼x4½	3x3-5/8x19	10x1¼x27	205	6-7/8	193
	19x1¼x4½	3x3-3/8x19	11x1½x27	231	6-7/8	219
	19x1¼x4½	3x3-3/8x19	12x1½x27	237	6-7/8	231
	19x1¼x4½	3x3-1/8x19	12x1-3/4x27	256	6-7/8	249
	19x1¼x4½	3x3-1/8x19	13x1-3/4x27	282	6-7/8	263
	19x1¼x4½	3x2-7/8x19	14x2x27	308	6-7/8	299
	19x1¼x4½	3x2-5/8x19	15x2¼x27	335	6-7/8	338
	19x1¼x4½	3x2-5/8x19	16x2-1/4x27	342	6-7/8	356
	19x1¼x4½	3x2-3/8x19	16x2½x27	361	6-7/8	382
19"	20x1¼x4½	3x3-7/8x20	8x1x28	120	6-7/8	170
	20x1¼x4½	3x3-5/8x20	8x1¼x28	160	6-7/8	182
	20x1¼x4½	3x3-7/8x20	9x1x28	135	6-7/8	178
	20x1¼x4½	3x3-5/8x20	9x1¼x28	186	6-7/8	192
	20x1¼x4½	3x3-5/8x20	10x1¼x28	213	6-7/8	202
	20x1¼x4½	3x3-3/8x20	11x1½x28	239	6-7/8	229
	20x1¼x4½	3x3-3/8x20	12x1½x28	246	6-7/8	241
	20x1¼x4½	3x3-1/8x20	12x1-3/4x28	266	6-7/8	260
	20x1¼x4½	3x3-1/8x20	13x1-3/4x28	293	6-7/8	274
	20x1¼x4½	3x2-7/8x20	14x2x28	320	6-7/8	311
	20x1¼x4½	3x2-5/8x20	15x2¼x28	347	6-7/8	352
	20x1¼x4½	3x2-5/8x20	16x2¼x28	355	6-7/8	370
	20x1¼x4½	3x2-3/8x20	16x2½x28	374	6-7/8	397

*Weight does not include 2 anchor bolts @ 12#

TYPE D BEARINGS
FIXED (CONT.)

BOTTOM FLANGE WIDTH	TOP PLATE	WEB	MASONRY PLATE	P	HEIGHT (NO LEAD PLATE)	*WEIGHT
20"	21x1¼x4½	3x3-7/8x21	8x1x29	124	6-7/8	178
	21x1¼x4½	3x3-5/8x21	8x1¼x29	166	6-7/8	190
	21x1¼x4½	3x3-7/8x21	9x1x29	140	6-7/8	186
	21x1¼x4½	3x3-5/8x21	9x1¼x29	193	6-7/8	200
	21x1¼x4½	3x3-5/8x21	10x1¼x29	220	6-7/8	210
	21x1¼x4½	3x3-3/8x21	11x1½x29	248	6-7/8	238
	21x1¼x4½	3x3-3/8x21	12x1½x29	255	6-7/8	251
	21x1¼x4½	3x3-1/8x21	12x1-3/4x29	276	6-7/8	271
	21x1¼x4½	3x3-1/8x21	13x1-3/4x29	303	6-7/8	285
	21x1¼x4½	3x2-7/8x21	14x2x29	331	6-7/8	323
	21x1¼x4½	3x2-5/8x21	15x2¼x29	360	6-7/8	366
	21x1¼x4½	3x2-5/8x21	16x2¼x29	368	6-7/8	384
	21x1¼x4½	3x2-3/8x21	16x2½x29	388	6-7/8	413
21"	22x1¼x4½	3x3-7/8x22	9x1x30	145	6-7/8	194
	22x1¼x4½	3x3-5/8x22	9x1¼x30	200	6-7/8	208
	22x1¼x4½	3x3-5/8x22	10x1¼x30	228	6-7/8	219
	22x1¼x4½	3x3-3/8x22	11x1½x30	257	6-7/8	248
	22x1¼x4½	3x3-3/8x22	12x1½x30	264	6-7/8	261
	22x1¼x4½	3x3-1/8x22	12x1-3/4x30	285	6-7/8	281
	22x1¼x4½	3x3-1/8x22	13x1-3/4x30	314	6-7/8	296
	22x1¼x4½	3x2-7/8x22	14x2x30	343	6-7/8	336
	22x1¼x4½	3x2-5/8x22	15x2¼x30	372	6-7/8	380
	22x1¼x4½	3x2-5/8x22	16x2¼x30	381	6-7/8	399
	22x1¼x4½	3x2-3/8x22	16x2½x30	401	6-7/8	428
	22x1¼x4½	3x2-3/8x22	17x2½x30	431	6-7/8	449
22"	23x1¼x4½	3x3-7/8x23	9x1x31	150	6-7/8	202
	23x1¼x4½	3x3-5/8x23	9x1¼x31	207	6-7/8	216
	23x1¼x4½	3x3-5/8x23	10x1¼x31	236	6-7/8	227
	23x1¼x4½	3x3-3/8x23	11x1½x31	265	6-7/8	257
	23x1¼x4½	3x3-3/8x23	12x1½x31	273	6-7/8	271
	23x1¼x4½	3x3-1/8x23	12x1-3/4x31	295	6-7/8	292
	23x1¼x4½	3x3-1/8x23	13x1-3/4x31	325	6-7/8	307
	23x1¼x4½	3x2-7/8x23	14x2x31	355	6-7/8	348
	23x1¼x4½	3x2-5/8x23	15x2¼x31	385	6-7/8	394
	23x1¼x4½	3x2-5/8x23	16x2¼x31	393	6-7/8	413
	23x1¼x4½	3x2-3/8x23	16x2½x31	415	6-7/8	443
	23x1¼x4½	3x2-3/8x23	17x2½x31	445	6-7/8	465
23"	24x1¼x4½	3x3-7/8x24	10x1x32	172	6-7/8	219
	24x1¼x4½	3x3-5/8x24	10x1¼x32	243	6-7/8	236
	24x1¼x4½	3x3-3/8x24	11x1½x32	274	6-7/8	267
	24x1¼x4½	3x3-3/8x24	12x1½x32	282	6-7/8	281
	24x1¼x4½	3x3-1/8x24	12x1-3/4x32	304	-7/8	302

*Weight does not include 2 anchor bolts @ 12#

F

TYPE D BEARINGS
(FIXED CONT.)

BOTTOM FLANGE WIDTH	TOP PLATE	WEB	MASONRY PLATE	P	HEIGHT (NO LEAD PLATE)	*WEIGHT
23" (Cont.)	24x1¼x4½	3x3-1/8x24	13x1-3/4x32	335	6-7/8	318
	24x1¼x4½	3x2-7/8x24	14x2x32	366	6-7/8	361
	24x1¼x4½	3x2-5/8x24	15x2¼x32	397	6-7/8	407
	24x1¼x4½	3x2-5/8x24	16x2¼x32	406	6-7/8	428
	24x1¼x4½	3x2-3/8x24	16x2½x32	428	6-7/8	459
	24x1¼x4½	3x2-3/8x24	17x2½x32	459	6-7/8	481
	24x1¼x4½	3x2-5/8x24	18x2-3/4x32	491	7-3/8	550
24"	25x1¼x4½	3x3-7/8x25	10x1x33	178	6-7/8	227
	25x1¼x4½	3x3-5/8x25	10x1¼x33	251	6-7/8	245
	25x1¼x4½	3x3-3/8x25	11x1½x33	282	6-7/8	277
	25x1¼x4½	3x3-3/8x25	12x1½x33	291	6-7/8	291
	25x1¼x4½	3x3-1/8x25	12x1-3/4x33	314	6-7/8	313
	25x1¼x4½	3x3-1/8x25	13x1-3/4x33	346	6-7/8	329
	25x1¼x4½	3x2-7/8x25	14x2x33	378	6-7/8	373
	25x1¼x4½	3x2-5/8x25	15x2¼x33	410	6-7/8	421
	25x1¼x4½	3x2-5/8x25	16x2¼x33	419	6-7/8	442
	25x1¼x4½	3x2-3/8x25	16x2½x33	442	6-7/8	474
	25x1¼x4½	3x2-3/8x25	17x2½x33	474	6-7/8	497
	25x1¼x4½	3x2-5/8x25	18x2-3/4x33	506	7-3/8	568
25"	26x1¼x4½	3x3-7/8x26	10x1x34	183	6-7/8	235
	26x1¼x4½	3x3-5/8x26	10x1¼x34	259	6-7/8	253
	26x1¼x4½	3x3-3/8x26	11x1½x34	291	6-7/8	286
	26x1¼x4½	3x3-3/8x26	12x1½x34	300	6-7/8	300
	26x1¼x4½	3x3-1/8x26	12x1-3/4x34	324	6-7/8	324
	26x1¼x4½	3x3-1/8x26	13x1-3/4x34	356	6-7/8	340
	26x1¼x4½	3x2-7/8x26	14x2x34	389	6-7/8	385
	26x1¼x4½	3x2-5/8x26	15x2¼x34	422	6-7/8	435
	26x1¼x4½	3x2-5/8x26	16x2¼x34	432	6-7/8	457
	26x1¼x4½	3x2-3/8x26	16x2½x34	455	6-7/8	489
	26x1¼x4½	3x2-3/8x26	17x2½x34	488	6-7/8	513
	26x1¼x4½	3x2-5/8x26	18x2-3/4x34	522	7-3/8	586
26"	27x1¼x4½	3x3-7/8x27	11x1x35	159	6-7/8	253
	27x1¼x4½	3x3-5/8x27	11x1¼x35	248	6-7/8	274
	27x1¼x4½	3x3-3/8x27	11x1½x35	300	6-7/8	296
	27x1¼x4½	3x3-3/8x27	12x1½x35	309	6-7/8	310
	27x1¼x4½	3x3-1/8x27	12x1-3/4x35	333	6-7/8	334
	27x1¼x4½	3x3-1/8x27	13x1-3/4x35	367	6-7/8	352
	27x1¼x4½	3x2-7/8x27	14x2x35	401	6-7/8	398
	27x1¼x4½	3x2-5/8x27	15x2¼x35	435	6-7/8	449
	27x1¼x4½	3x2-5/8x27	16x2¼x35	445	6-7/8	471
	27x1¼x4½	3x2-3/8x27	16x2½x35	469	6-7/8	505
	27x1¼x4½	3x2-3/8x27	17x2½x35	503	6-7/8	529
	27x1¼x4½	3x2-5/8x27	18x2-3/4x35	537	7-3/8	604
	27x1¼x4½	3x2-3/8x27	19x3x35	571	7-3/8	673

*Weight does not include 2 anchor bolts @ 12#

E

TYPE D BEARINGS
(FIXED CONT.)

BOTTOM FLANGE WIDTH	TOP PLATE	WEB	MASONRY PLATE	P	HEIGHT (NO LEAD PLATE)	*WEIGHT
27"	28x1¼x4½	3x3-7/8x28	11x1x36	164	6-7/8	261
	28x1¼x4½	3x3-5/8x28	11x1¼x36	256	6-7/8	283
	28x1¼x4½	3x3-3/8x28	11x1½x36	308	6-7/8	305
	28x1¼x4½	3x3-3/8x28	12x1½x36	317	6-7/8	320
	28x1¼x4½	3x3-1/8x28	12x1-3/4x36	343	6-7/8	345
	28x1¼x4½	3x3-1/8x28	13x1-3/4x36	377	6-7/8	363
	28x1¼x4½	3x2-7/8x28	14x2x36	412	6-7/8	410
	28x1¼x4½	3x2-5/8x28	15x2¼x36	447	6-7/8	462
	28x1¼x4½	3x2-5/8x28	16x2¼x36	457	6-7/8	485
	28x1¼x4½	3x2-3/8x28	16x2½x36	482	6-7/8	520
	28x1¼x4½	3x2-3/8x28	17x2½x36	517	6-7/8	545
	28x1¼x4½	3x2-5/8x28	18x2-3/4x36	552	7-3/8	623
	28x1¼x4½	3x2-3/8x28	19x3x36	588	7-3/8	693

*Weight does not include 2 anchor bolts @ 12#

F

TYPE "D" MODIFIED BEARING

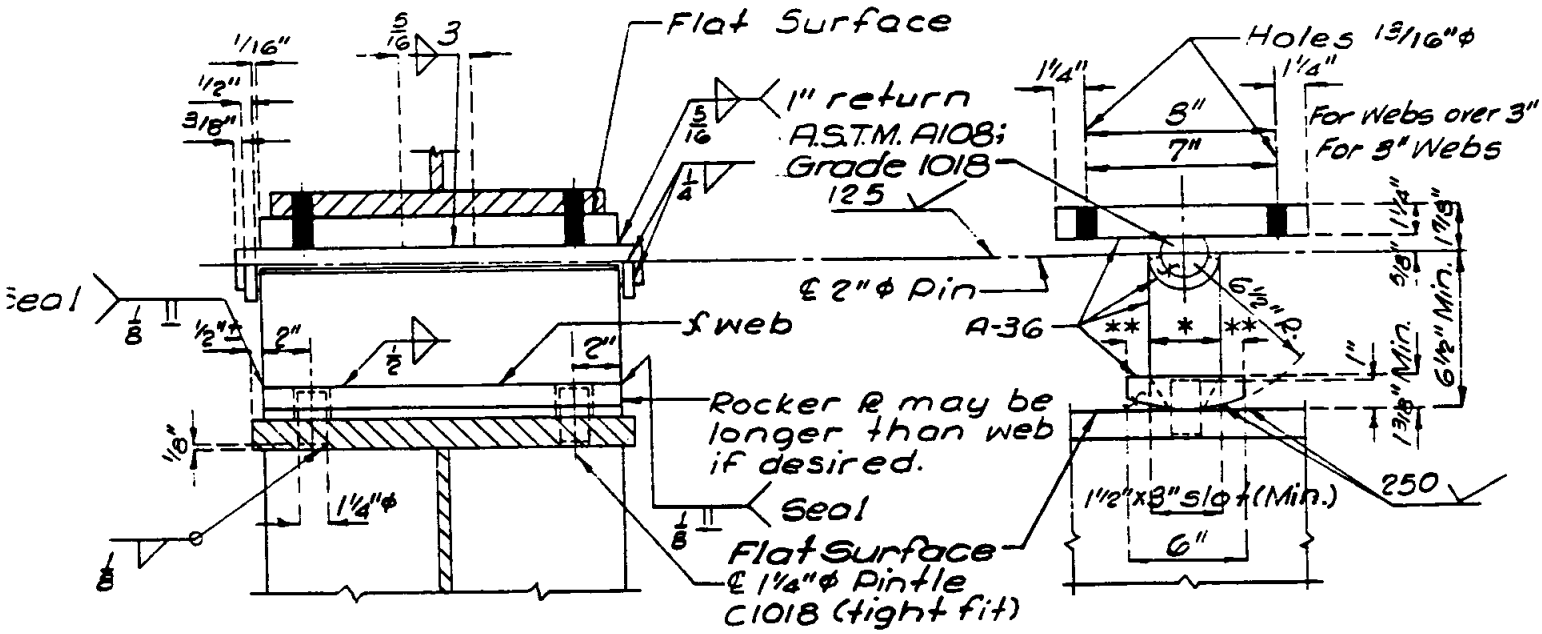

* 3" For Bridge Expansion less than 250'
4" For Bridge Expansion more than 250'

** For 3" Web use 1½"
For 4" Web use 1"

(1) 2" For Bridge Expansion more than 250'

ROCKER PLATE LENGTH	
MAXIMUM REACTION	ROCKER PL LENGTH
80.7k	12"
89.7k	13"
99.0k	14"
107.6k	15"

Note: All steel A-36

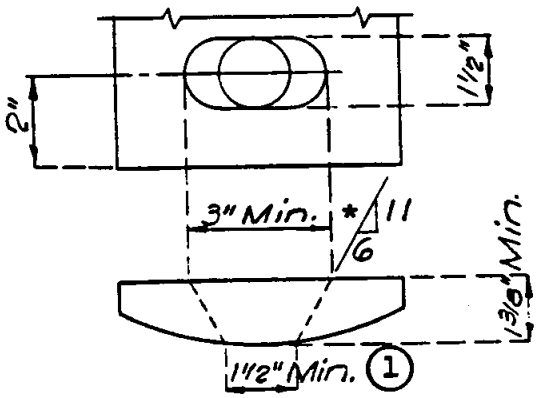

DETAIL OF BEVEL SLOT

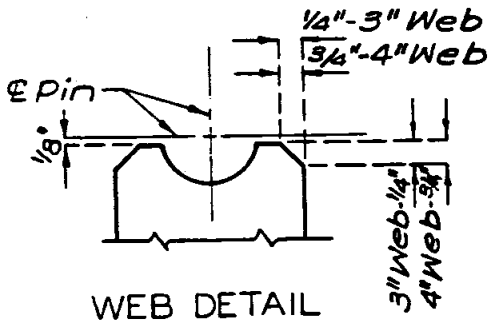

WEB DETAIL

REVISED FEB. 1980	SEC. 3.31	1.6

TYPE "E" BEARINGS
EXPANSION

DESIGN DATA: Steel A-36, fs = 20,000 psi.
Maximum allowable Masonry Pressure = 1,000 psi.

ANCHOR BOLT SPACING: Use same anchor bolt spacing for all interior bents when difference in spacing would be 1" or less. If necessary, increase appropriate masonry plate size to accommodate larger spacing. (Use 1¼" A.B. except for 2 Girder Design in which case use 1½" A.B.)

EXPANSION BEARINGS: Value of "P" controlled by Masonry Pressure.

"e" IN MIDDLE 1/3

$$\text{"Pc"} = \frac{Lb - (3.53)^*}{1 + 6e/b}$$

"e" OUT OF MIDDLE 1/3

$$\text{"Pc"} = \frac{3(b/2 - e)L - (3.53)^*}{2}$$

Value of "P" controlled by Steel Stress.

$$\text{"Ps"} = \frac{1.333\ fst^2\ [L - (3^{**})]}{b}$$

*Use 4.81 for 1-3/4" holes (1½" A.B.)
**Use 3.5 for 1-3/4" holes (1½" A.B.)

BEVEL PLATES: Not required

P = Capacity of Bearing in Kips
L = Length of bottom plate
t = Bottom plate thickness
T = Top plate thickness
b = Width of bottom plate
e = Eccentricity ****
B = Width of top plate

Length of span or spans	60'	80'	100'	180'	260'	340'	420'
Eccentricity to use	3/4"	7/8"	1"	1½"	2"	2½"	3"

**** Design of expansion or contraction for Type "E" Bearings. (Use 1/16" per 10' of span from fixed bearing + 3/8".)

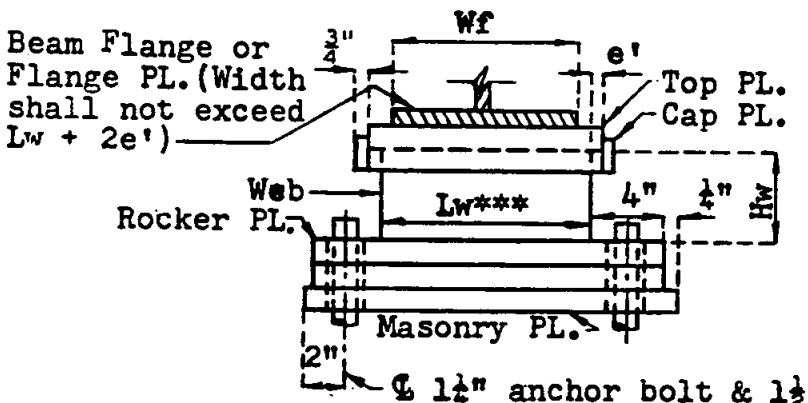

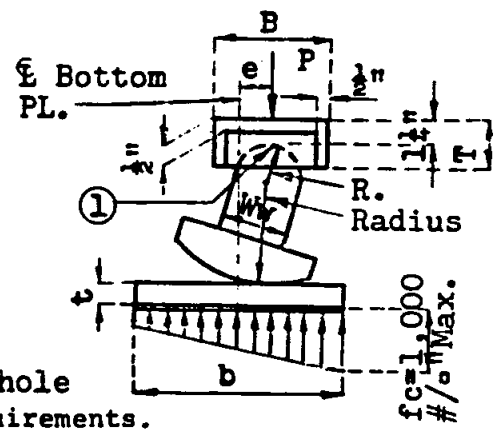

① See Special Provisions for lubrication requirements.

*** Length of web shall not be less than out to out dimensions of stiff. plates. (Normal to web.)
e'= Lateral Expansion (Consult Structural Design Engineer)

NOTES TO DESIGNER:

1. Strive to obtain as much duplication as possible in machined bearing parts (rocker assemblies) within bridges and Projects.
2. Lw ≦ Wf + 3".
3. Hw ≦ 2Ww.
4. Allowable bearing pressure on lubricant for design = 5,000 psi.
5. A vertical line from ℄ Pin shall not fall outside web at maximum eccentricity.
6. Masonry Plate thickness and Rocker plate thickness shall be in increments of ¼".

TYPE "E" BEARINGS
EXPANSION (CON'T)

SELECTION CRITERIA:

Proceed as if a Type "D" Expansion Bearing is required.

Select a masonry plate, rocker plate, and radius as listed in the appropiate table.

Revise the web and top plate dimensions as follows:

WEB PLATE WIDTH		TOP PLATE FOR TYPE "E"		
TYPE "D"	TYPE "E"	B	T	R
3"	4"	6"	2¼"	2"
4"	5"	7"	2½"	2½"

Height and weight of Type "E" Expansion Bearings will differ from the corresponding Type "D" Expansion Bearings.

Weight of Type "E" Bearings (Expansion and Fixed) are available from a program for the Monroe 1880 calculator. Consult the Development Section.

TYPE "E" BEARINGS
FIXED

FIXED BEARINGS:

Value of "P" controlled by Masonry Pressure "Pc" = $\frac{bL-3.53}{1+3/b}$

Above formula based on an assumed eccentricity of load = ½".

Value of "P" controlled by steel stress;

MOMENT M1 "Ps" = $\frac{f_s t^2(bL-3.53)}{36.75}$ MOMENT M2 "Ps" = $\frac{f_s t^2(bL-3.53)}{3(b/2-1.5)^2}$

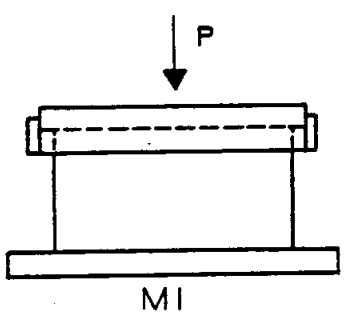

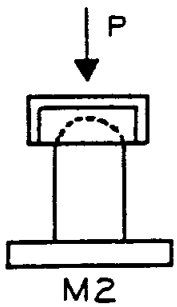

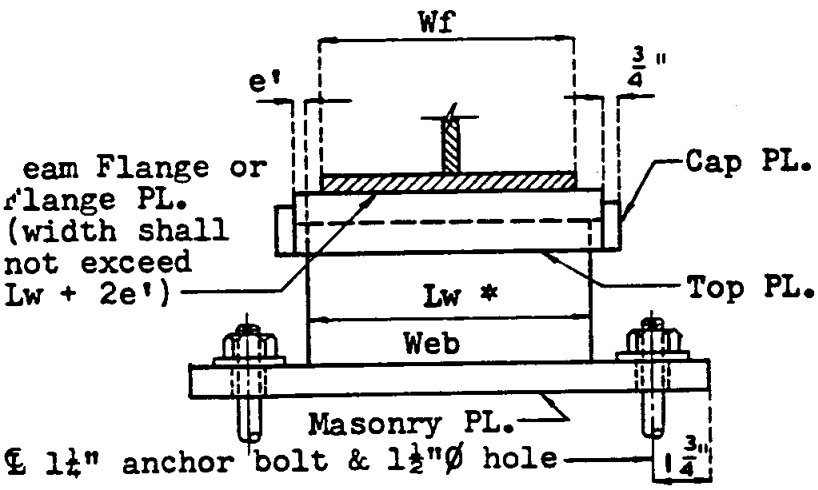

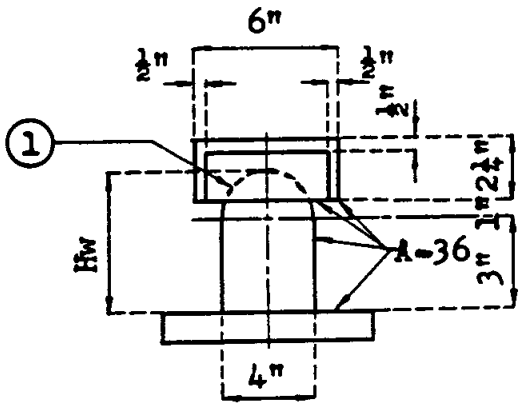

ANCHOR BOLTS:

Spans thru 150' ..... 1¼" A.B.
Spans over 150' ..... 1½" A.B.
All 2 Girder Designs ..... 1½" A.B.

NOTES TO DESIGNER:

1. Lw ≤ Wf + 3"
2. Masonry PL. thickness shall be in increments of ¼".
3. Allowable bearing pressure on lubricant for design=5,000 psi.

* Length of web shall not be less than out to out dimensions of stiffener plates. (Normal to Web).

e' = Lateral expansion (Consult Structural Design Engineer).

(1) See Special Provisions for lubrication requirements.

TYPE "E" BEARINGS
FIXED (CONT.)

BOTTOM FLANGE WIDTH or BEAM DEPTH	TOP PLATE	WEB	MASONRY PLATE	P	HEIGHT (NO LEAD PLATE)
8"	(9+2e')x2¼x6	4x5x9	8x1x17	72	7¼
or	(9+2e')x2¼x6	4x5x9	8x1¼x17	96	7½
W21	(9+2e')x2¼x6	4x5x9	9x1x17	81	7¼
	(9+2e')x2¼x6	4x5x9	9x1¼x17	112	7½
	(9+2e')x2¼x6	4x5x9	10x1¼x17	128	7½
	(9+2e')x2¼x6	4x5x9	11x1½x17	144	7-3/4
9"	(10+2e')x2¼x6	4x5x10	8x1x18	76	7¼
or	(10+2e')x2¼x6	4x5x10	8x1¼x18	102	7½
W24	(10+2e')x2¼x6	4x5x10	9x1x18	86	7¼
	(10+2e')x2¼x6	4x5x10	9x1¼x18	119	7½
	(10+2e')x2¼x6	4x5x10	10x1¼x18	136	7½
	(10+2e')x2¼x6	4x5x10	11x1½x18	153	7-3/4
	(10+2e')x2¼x6	4x5x10	12x1½x18	170	7-3/4
10"	(11+2e')x2¼x6	4x5x11	8x1x19	81	7¼
or	(11+2e')x2¼x6	4x5x11	8x1¼x19	108	7½
W27	(11+2e')x2¼x6	4x5x11	9x1x19	91	7¼
	(11+2e')x2¼x6	4x5x11	9x1¼x19	126	7½
	(11+2e')x2¼x6	4x5x11	10x1¼x19	143	7½
	(11+2e')x2¼x6	4x5x11	11x1½x19	161	7-3/4
	(11+2e')x2¼x6	4x5x11	12x1½x19	180	7-3/4
11"	(12+2e')x2¼x6	4x5x12	8x1x20	85	7¼
or	(12+2e')x2¼x6	4x5x12	8x1¼x20	114	7½
W30	(12+2e')x2¼x6	4x5x12	9x1x20	96	7¼
	(12+2e')x2¼x6	4x5x12	9x1¼x20	132	7½
	(12+2e')x2¼x6	4x5x12	10x1¼x20	151	7½
	(12+2e')x2¼x6	4x5x12	11x1½x20	170	7-3/4
	(12+2e')x2¼x6	4x5x12	12x1½x20	189	7-3/4
	(12+2e')x2¼x6	4x5x12	13x1-3/4x20	208	8
12"	(13+2e')x2¼x6	4x5x13	8x1x21	90	7¼
or	(13+2e')x2¼x6	4x5x13	8x1¼x21	120	7½
W33	(13+2e')x2¼x6	4x5x13	9x1x21	101	7¼
	(13+2e')x2¼x6	4x5x13	9x1¼x21	139	7½
	(13+2e')x2¼x6	4x5x13	10x1¼x21	159	7½
	(13+2e')x2¼x6	4x5x13	11x1½x21	179	7-3/4
	(13+2e')x2¼x6	4x5x13	12x1½x21	199	7-3/4
	(13+2e')x2¼x6	4x5x13	13x1-3/4x21	219	8
	(13+2e')x2¼x6	4x5x13	14x2x21	225	8¼

TYPE "E" BEARINGS
FIXED (CONT.)

BOTTOM FLANGE WIDTH or BEAM DEPTH	TOP PLATE	WEB	MASONRY PLATE	P	HEIGHT (NO LEAD PLATE)
13" or W36	(14+2e')x2¼x6	4x5x14	8x1x22	94	7¼
	(14+2e')x2¼x6	4x5x14	8x1¼x22	125	7½
	(14+2e')x2¼x6	4x5x14	9x1x22	106	7¼
	(14+2e')x2¼x6	4x5x14	9x1¼x22	146	7½
	(14+2e')x2¼x6	4x5x14	10x1¼x22	167	7½
	(14+2e')x2¼x6	4x5x14	11x1½x22	187	7-3/4
	(14+2e')x2¼x6	4x5x14	12x1½x22	208	7-3/4
	(14+2e')x2¼x6	4x5x14	13x1-3/4x22	230	8
	(14+2e')x2¼x6	4x5x14	14x2x22	242	8¼
14"	(15+2e')x2¼x6	4x5x15	8x1x23	98	7¼
	(15+2e')x2¼x6	4x5x15	8x1¼x23	131	7½
	(15+2e')x2¼x6	4x5x15	9x1x23	111	7¼
	(15+2e')x2¼x6	4x5x15	9x1¼x23	153	7½
	(15+2e')x2¼x6	4x5x15	10x1¼x23	174	7½
	(15+2e')x2¼x6	4x5x15	11x1½x23	196	7-3/4
	(15+2e')x2¼x6	4x5x15	12x1½x23	218	7-3/4
	(15+2e')x2¼x6	4x5x15	13x1-3/4x23	240	8
	(15+2e')x2¼x6	4x5x15	14x2x23	259	8¼
15"	(16+2e')x2¼x6	4x5x16	8x1x24	103	7¼
	(16+2e')x2¼x6	4x5x16	8x1¼x24	137	7½
	(16+2e')x2¼x6	4x5x16	9x1x24	116	7¼
	(16+2e')x2¼x6	4x5x16	9x1¼x24	159	7½
	(16+2e')x2¼x6	4x5x16	10x1¼x24	182	7½
	(16+2e')x2¼x6	4x5x16	11x1½x24	205	7-3/4
	(16+2e')x2¼x6	4x5x16	12x1½x24	228	7-3/4
	(16+2e')x2¼x6	4x5x16	13x1-3/4x24	251	8
	(16+2e')x2¼x6	4x5x16	14x2x24	274	8¼
	(16+2e')x2¼x6	4x5x16	15x2¼x24	277	8½
16"	(17+2e')x2¼x6	4x5x17	8x1x25	107	7¼
	(17+2e')x2¼x6	4x5x17	8x1¼x25	143	7½
	(17+2e')x2¼x6	4x5x17	9x1x25	121	7¼
	(17+2e')x2¼x6	4x5x17	9x1¼x25	166	7½
	(17+2e')x2¼x6	4x5x17	10x1¼x25	190	7½
	(17+2e')x2¼x6	4x5x17	11x1½x25	213	7-3/4
	(17+2e')x2¼x6	4x5x17	12x1½x25	237	7-3/4
	(17+2e')x2¼x6	4x5x17	13x1-3/4x25	261	8
	(17+2e')x2¼x6	4x5x17	14x2x25	285	8¼
	(17+2e')x2¼x6	4x5x17	15x2-1/4x25	294	8½

TYPE "E" BEARINGS
FIXED (CONT.)

BOTTOM FLANGE WIDTH	TOP PLATE	WEB	MASONRY PLATE	P	HEIGHT (NO LEAD PLATE)
17"	(18+2e')x2¼x6	4x5x18	8x1x26	111	7¼
	(18+2e')x2¼x6	4x5x18	8x1¼x26	149	7½
	(18+2e')x2¼x6	4x5x18	9x1x26	125	7¼
	(18+2e')x2¼x6	4x5x18	9x1¼x26	173	7½
	(18+2e')x2¼x6	4x5x18	10x1¼x26	197	7½
	(18+2e')x2¼x6	4x5x18	11x1½x26	222	7-3/4
	(18+2e')x2¼x6	4x5x18	12x1½x26	247	7-3/4
	(18+2e')x2¼x6	4x5x18	13x1-3/4x26	272	8
	(18+2e')x2¼x6	4x5x18	14x2x26	297	8¼
	(18+2e')x2¼x6	4x5x18	15x2¼x26	311	8½
18"	(19+2e')x2¼x6	4x5x19	8x1x27	116	7¼
	(19+2e')x2¼x6	4x5x19	8x1¼x27	155	7½
	(19+2e')x2¼x6	4x5x19	9x1x27	130	7¼
	(19+2e')x2¼x6	4x5x19	9x1¼x27	180	7½
	(19+2e')x2¼x6	4x5x19	10x1¼x27	205	7½
	(19+2e')x2¼x6	4x5x19	11x1½x27	231	7-3/4
	(19+2e')x2¼x6	4x5x19	12x1½x27	256	7-3/4
	(19+2e')x2¼x6	4x5x19	13x1-3/4x27	282	8
	(19+2e')x2¼x6	4x5x19	14x2x27	308	8¼
	(19+2e')x2¼x6	4x5x19	15x2¼x27	329	8½
19"	(20+2e')x2¼x6	4x5x20	8x1x28	120	7¼
	(20+2e')x2¼x6	4x5x20	8x1¼x28	160	7½
	(20+2e')x2¼x6	4x5x20	9x1x28	135	7¼
	(20+2e')x2¼x6	4x5x20	9x1¼x28	186	7½
	(20+2e')x2¼x6	4x5x20	10x1¼x28	213	7½
	(20+2e')x2¼x6	4x5x20	11x1½x28	239	7-3/4
	(20+2e')x2¼x6	4x5x20	12x1½x28	266	7-3/4
	(20+2e')x2¼x6	4x5x20	13x1-3/4x28	293	8
	(20+2e')x2¼x6	4x5x20	14x2x28	320	8¼
	(20+2e')x2¼x6	4x5x20	15x2¼x28	346	8½

TYPE "E" BEARINGS
FIXED (CONT.)

BOTTOM FLANGE WIDTH	TOP PLATE	WEB	MASONRY PLATE	P	HEIGHT (NO LEAD PLATE)
20"	(21+2e')x2¼x6	4x5x21	8x1x29	124	7¼
	(21+2e')x2¼x6	4x5x21	8x1¼x29	166	7½
	(21+2e')x2¼x6	4x5x21	9x1x29	140	7¼
	(21+2e')x2¼x6	4x5x21	9x1¼x29	193	7½
	(21+2e')x2¼x6	4x5x21	10x1¼x29	220	7½
	(21+2e')x2¼x6	4x5x21	11x1½x29	248	7-3/4
	(21+2e')x2¼x6	4x5x21	12x1½x29	276	7-3/4
	(21+2e')x2¼x6	4x5x21	13x1-3/4x29	303	8
	(21+2e')x2¼x6	4x5x21	14x2x29	331	8¼
	(21+2e')x2¼x6	4x5x21	15x2¼x29	360	8½
	(21+2e')x2¼x6	4x5x21	16x2¼x29	363	8½
21"	(22+2e')x2¼x6	4x5x22	9x1x30	145	7¼
	(22+2e')x2¼x6	4x5x22	9x1¼x30	200	7½
	(22+2e')x2¼x6	4x5x22	10x1¼x30	228	7½
	(22+2e')x2¼x6	4x5x22	11x1½x30	257	7-3/4
	(22+2e')x2¼x6	4x5x22	12x1½x30	285	7-3/4
	(22+2e')x2¼x6	4x5x22	13x1-3/4x30	314	8
	(22+2e')x2¼x6	4x5x22	14x2x30	343	8¼
	(22+2e')x2¼x6	4x5x22	15x2¼x30	372	8½
	(22+2e')x2¼x6	4x5x22	16x2¼x30	381	8½
22"	(23+2e')x2¼x6	4x5x23	9x1x31	150	7¼
	(23+2e')x2¼x6	4x5x23	9x1¼x31	207	7½
	(23+2e')x2¼x6	4x5x23	10x1¼x31	236	7½
	(23+2e')x2¼x6	4x5x23	11x1½x31	265	7-3/4
	(23+2e')x2¼x6	4x5x23	12x1½x31	295	7-3/4
	(23+2e')x2¼x6	4x5x23	13x1-3/4x31	325	8
	(23+2e')x2¼x6	4x5x23	14x2x31	355	8¼
	(23+2e')x2¼x6	4x5x23	15x2¼x31	385	8½
	(23+2e')x2¼x6	4x5x23	16x2¼x31	398	8½
23"	(24+2e')x2¼x6	4x5x24	10x1x32	172	7¼
	(24+2e')x2¼x6	4x5x24	10x1¼x32	243	7½
	(24+2e')x2¼x6	4x5x24	11x1½x32	274	7-3/4
	(24+2e')x2¼x6	4x5x24	12x1½x32	304	7-3/4
	(24+2e')x2¼x6	4x5x24	13x1-3/4x32	335	8
	(24+2e')x2¼x6	4x5x24	14x2x32	366	8¼
	(24+2e')x2¼x6	4x5x24	15x2¼x32	397	8½
	(24+2e')x2¼x6	4x5x24	16x2¼x32	416	8½

TYPE "E" BEARINGS
FIXED (CONT.)

BOTTOM FLANGE WIDTH	TOP PLATE	WEB	MASONRY PLATE	P	HEIGHT (NO LEAD PLATE)
24"	(25+2e')x2¼x6	4x5x25	10x1x33	178	7¼
	(25+2e')x2¼x6	4x5x25	10x1¼x33	251	7½
	(25+2e')x2¼x6	4x5x25	11x1½x33	282	7-3/4
	(25+2e')x2¼x6	4x5x25	12x1½x33	314	7-3/4
	(25+2e')x2¼x6	4x5x25	13x1-3/4x33	346	8
	(25+2e')x2¼x6	4x5x25	14x2x33	378	8¼
	(25+2e')x2¼x6	4x5x25	15x2¼x33	410	8½
	(25+2e')x2¼x6	4x5x25	16x2¼x33	433	8½
25"	(26+2e')x2¼x6	4x5x26	10x1x34	183	7¼
	(26+2e')x2¼x6	4x5x26	10x1¼x34	259	7½
	(26+2e')x2¼x6	4x5x26	11x1½x34	291	7-3/4
	(26+2e')x2¼x6	4x5x26	12x1½x34	324	7-3/4
	(26+2e')x2¼x6	4x5x26	13x1-3/4x34	356	8
	(26+2e')x2¼x6	4x5x26	14x2x34	389	8¼
	(26+2e')x2¼x6	4x5x26	15x2¼x34	422	8½
	(26+2e')x2¼x6	4x5x26	16x2¼x34	450	8½
26"	(27+2e')x2¼x6	4x5x27	11x1x35	207	7¼
	(27+2e')x2¼x6	4x5x27	11x1¼x35	300	7½
	(27+2e')x2¼x6	4x5x27	12x1½x35	333	7-3/4
	(27+2e')x2¼x6	4x5x27	13x1-3/4x35	367	8
	(27+2e')x2¼x6	4x5x27	14x2x35	401	8¼
	(27+2e')x2¼x6	4x5x27	15x2¼x35	435	8½
	(27+2e')x2¼x6	4x5x27	16x2¼x35	467	8½
27"	(28+2e')x2¼x6	4x5x28	11x1x36	213	7¼
	(28+2e')x2¼x6	4x5x28	11x1¼x36	308	7½
	(28+2e')x2¼x6	4x5x28	12x1½x36	343	7-3/4
	(28+2e')x2¼x6	4x5x28	13x1-3/4x36	377	8
	(28+2e')x2¼x6	4x5x28	14x2x36	412	8¼
	(28+2e')x2¼x6	4x5x28	15x2¼x36	447	8½
	(28+2e')x2¼x6	4x5x28	16x2¼x36	482	8½

TYPE "E" MODIFIED BEARING

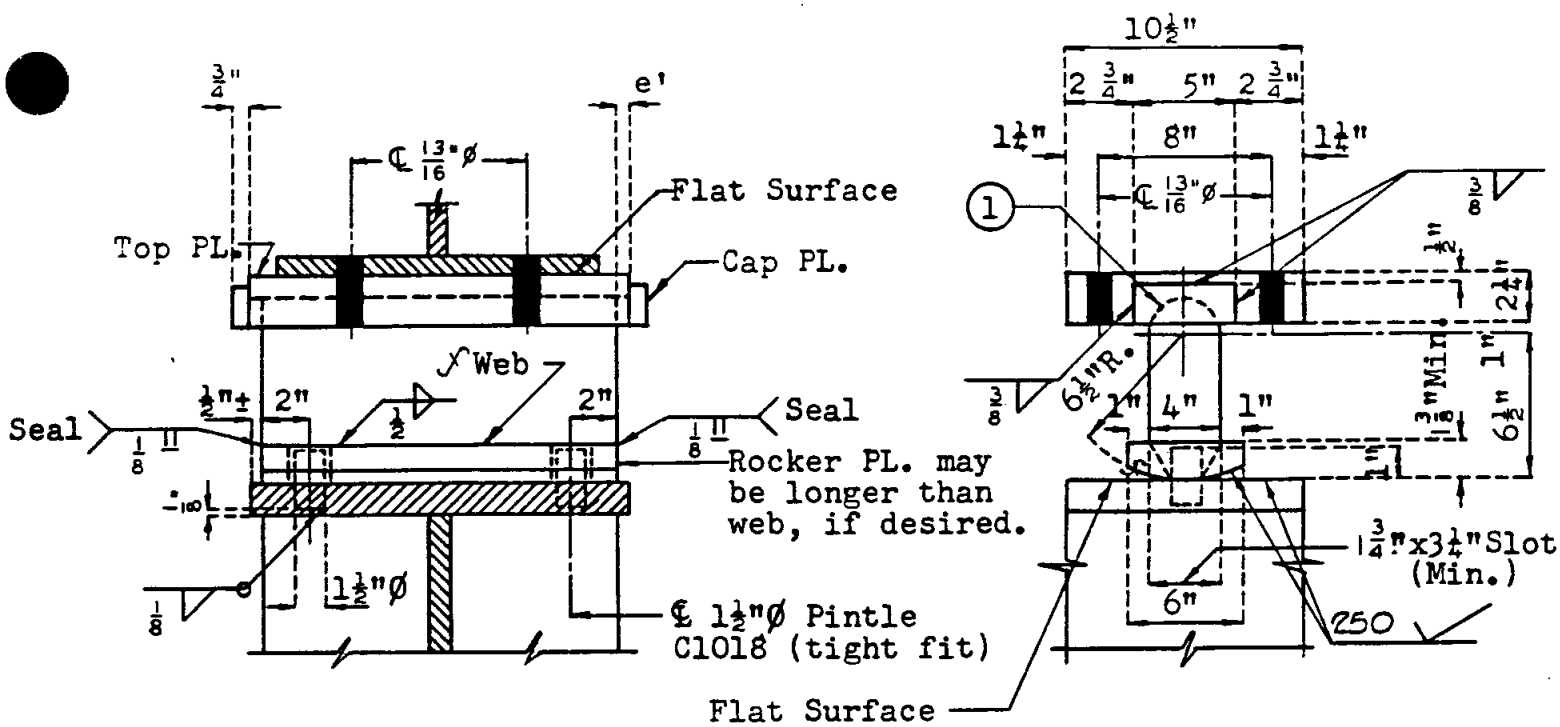

(1) See Special Provisions for lubrication requirements.

ROCKER PLATE LENGTH	
Maximum Reaction	Rocker PL. Length
76.2^k	12"
85.2^k	13"
94.2^k	14"
103.2^k	15"

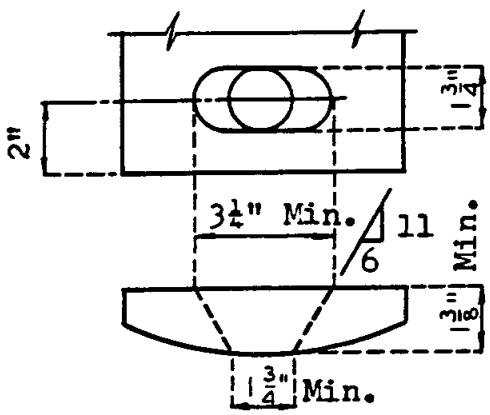

DETAIL OF BEVEL SLOT

NOTE: All steel to be A-36.

TOP PLATE WELDING DETAILS
TYPE "D" & "E" BEARINGS
(Top Brg. Plate to Flange)

Top bearing plates* 13" or less in length shall be welded to the bottom flange plate with a 3" long weld at each corner, transverse to flange.

Top bearing plates* larger than 13" in length shall be welded to the bottom flange plate with a series of 3" long welds as shown below.

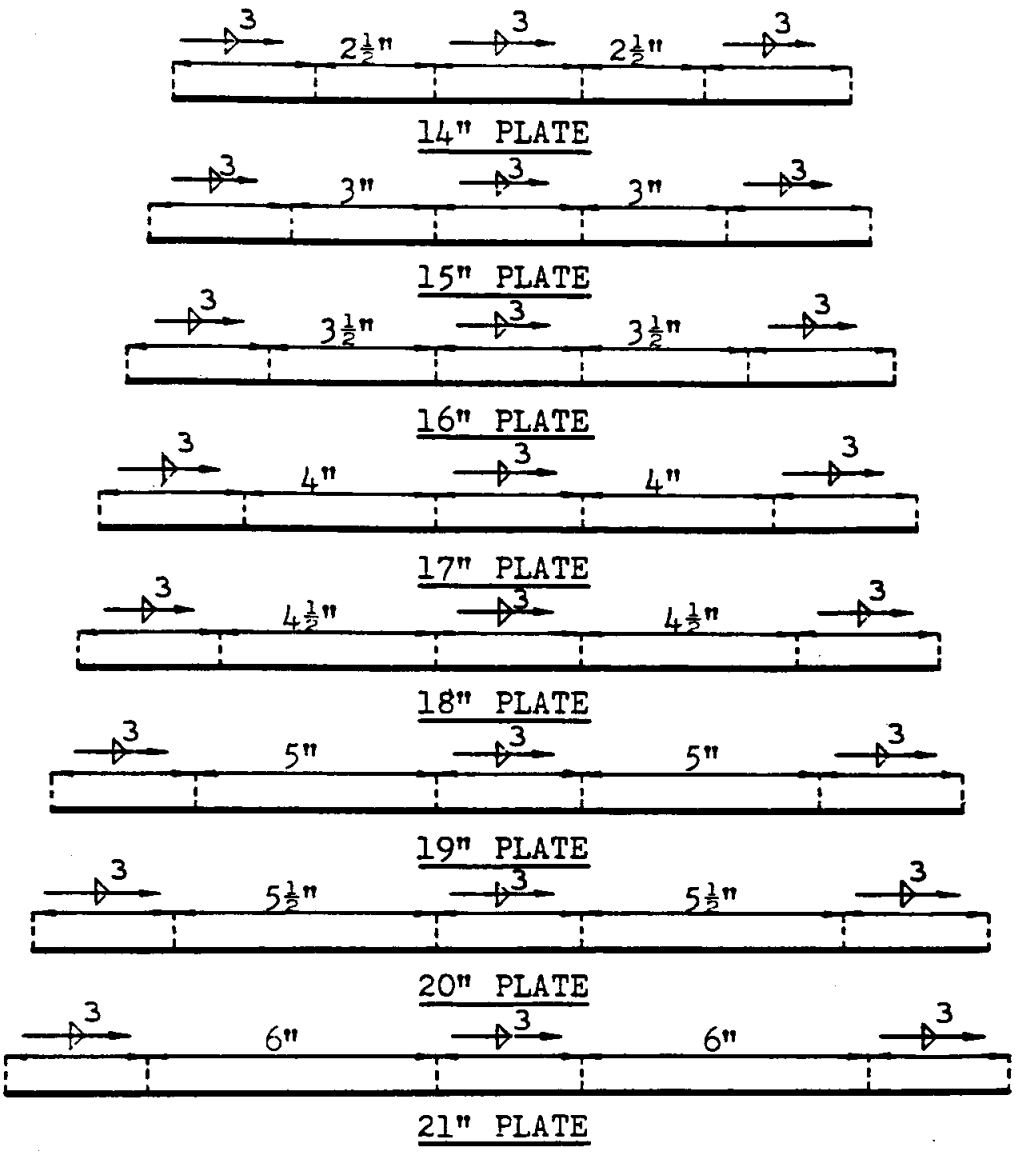

* Top plate length or flange width, whichever is shorter, will control welding dimensions.

F

TOP PLATE WELDING DETAILS
TYPE "D" & "E" BEARINGS
(TOP BRG. PLATE TO FLANGE CON'T.)

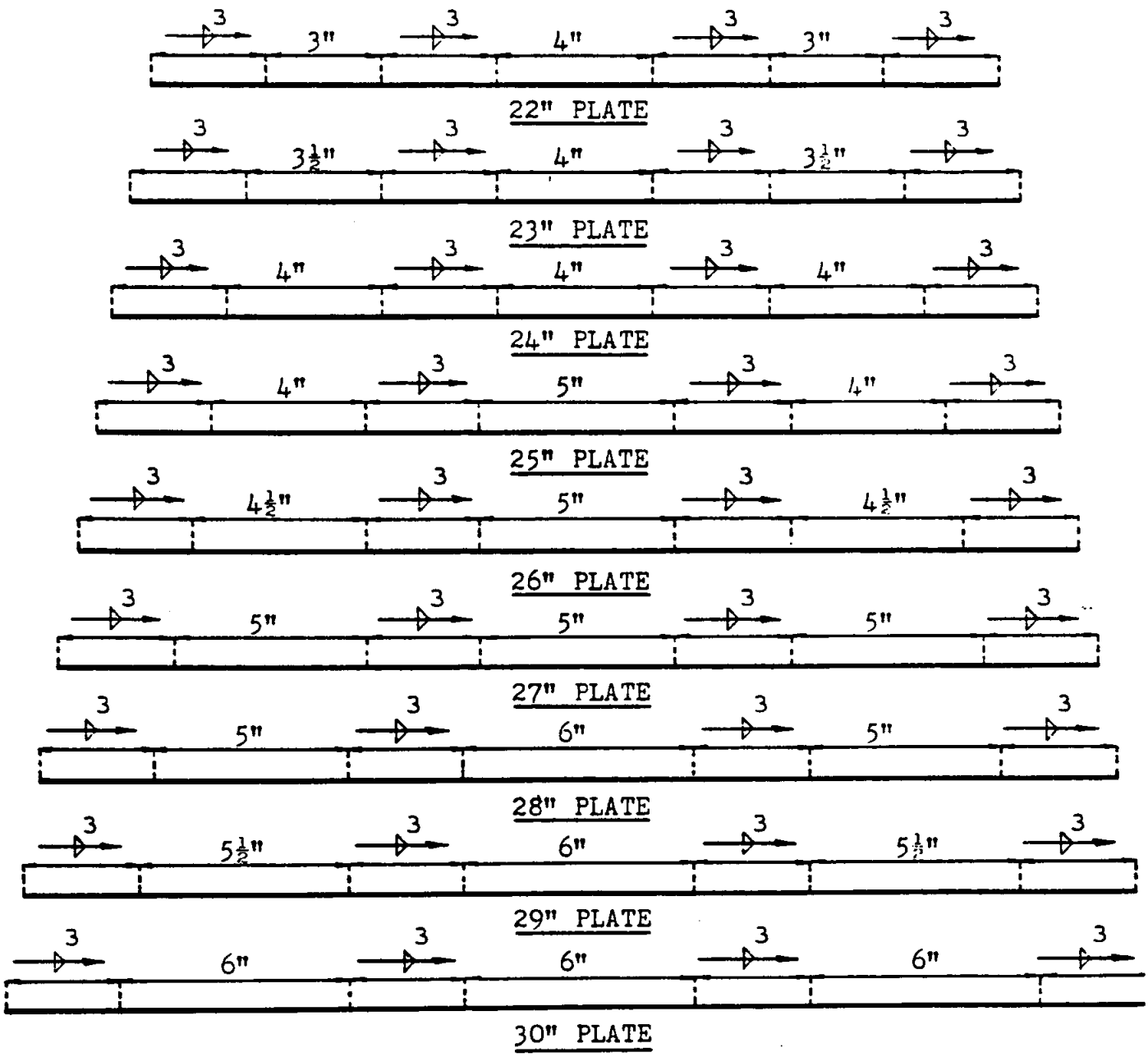

REVISED Oct. 1987	SEC. 3.31	1.10.2

F

TOP PLATE WELDING DETAILS
TYPE "D" BEARINGS
(Top Brg. Plate to Pin)

Top bearing plates 13" or less in length shall be welded to the pin with a 5/16 x 3" long weld centered on the pin in its longitudinal direction.

Top bearing plates larger than 13" in length shall be welded to the pin with a series of 5/16 x 3" long welds ("W1").

There shall also be a 5/16 weld with a 1" return at each corner.

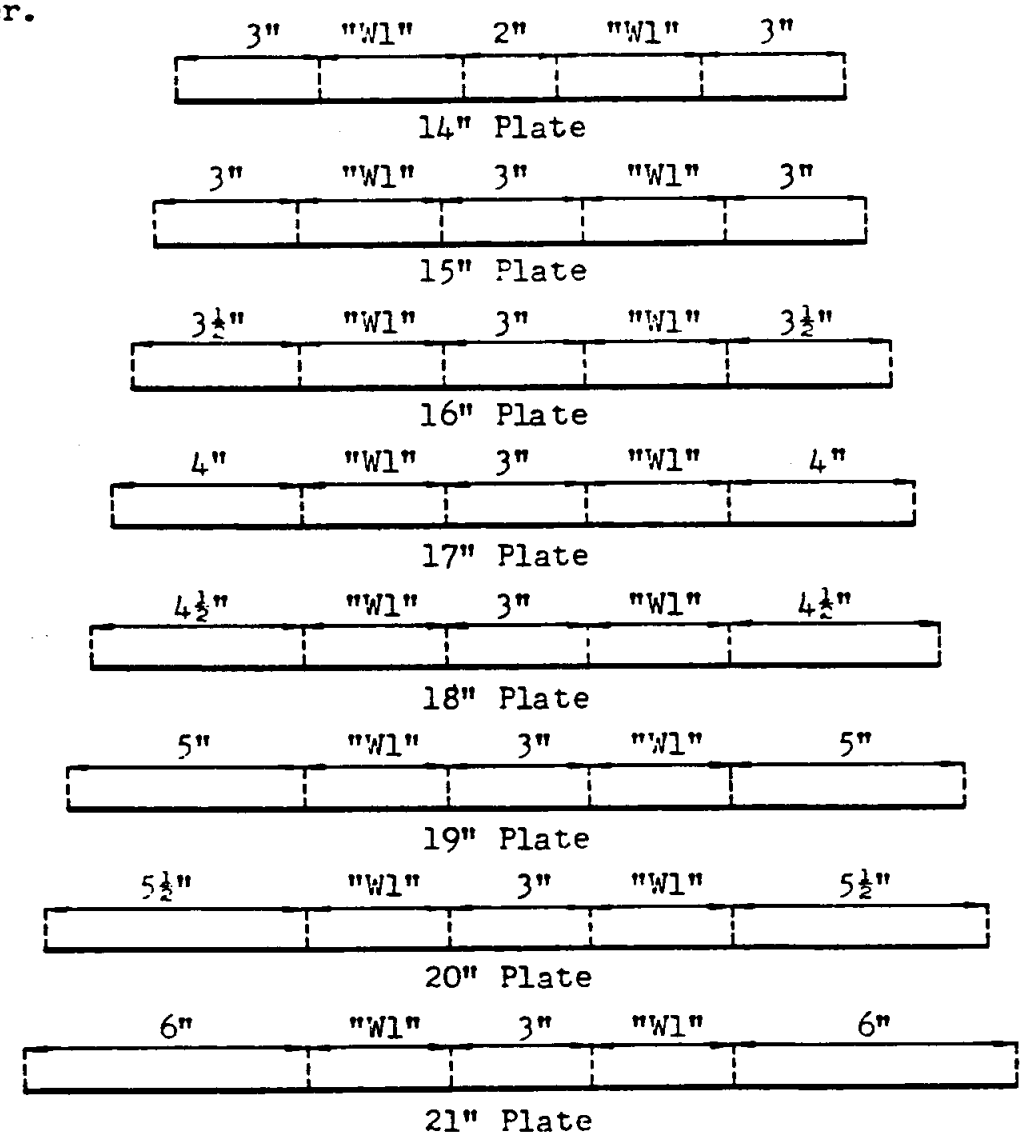

"W1" = 5/16 x 3" Weld Both Sides.

TOP PLATE WELDING DETAILS

TYPE "D" BEARINGS
(TOP BRG. PLATE TO PIN CON'T)

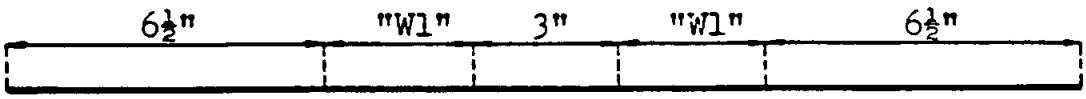

22" Plate

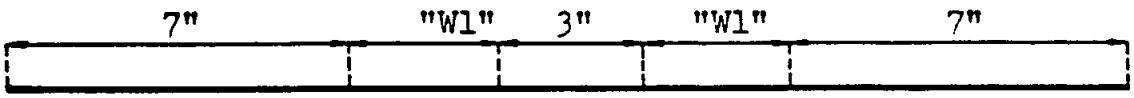

23" Plate

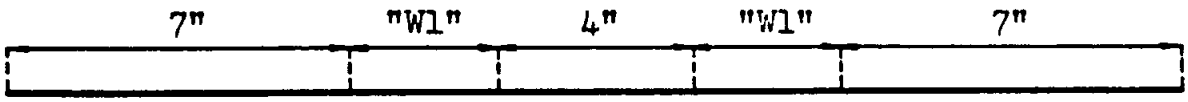

24" Plate

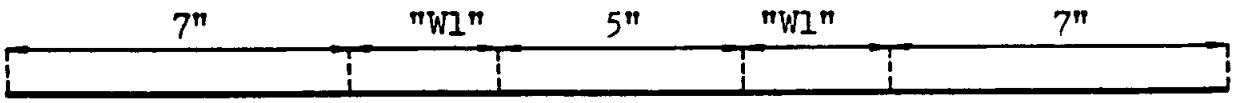

25" Plate

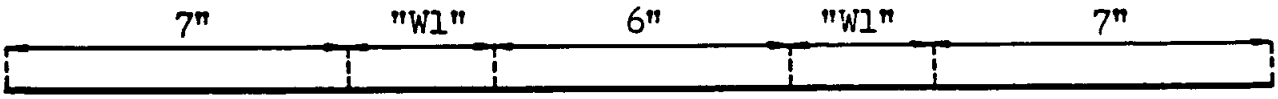

26" Plate

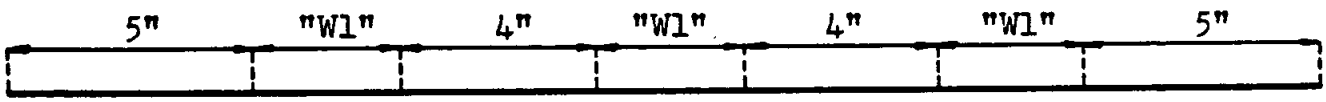

27" Plate

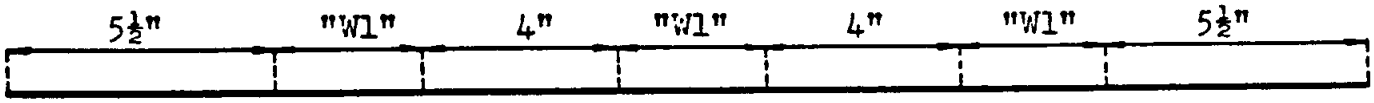

28" Plate

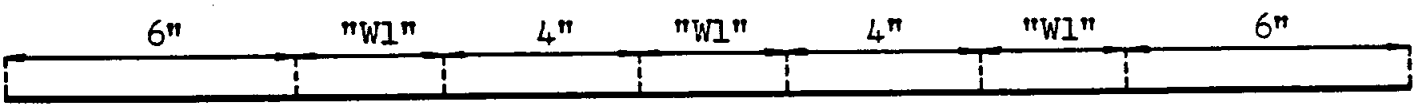

29" Plate

30" Plate

"W1" = 5/16 x 3" Weld Both Sides.

STANDARD FIXED BEARING PAD DESIGN

The standard fixed bearing pad is to be used on all flexible bents (such as pile cap bents) and at all fixed bents (such as bent no. 3 of a four span continuous structure) whether this bent is flexible or rigid (such as an open bent).

EXAMPLE:

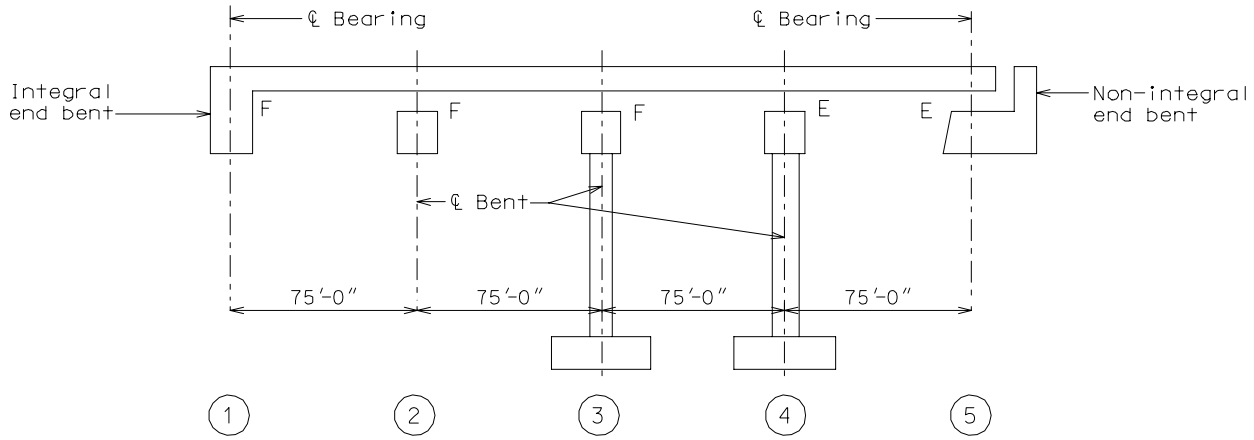

End Bent 1 : Integral construction - use standard plain fixed bearings.

Int. Bent 2 : Flexible bent (pile cap) - use standard laminated fixed bearings.

Int. Bent 3 : Rigid bent - fixed (no movement) - use standard laminated fixed bearings.

Int. Bent 4 : Rigid bent - expansion - use standard laminated expansion bearings.

End Bent 5 : Rigid bent - expansion - use standard laminated expansion bearings.

Note: Pot bearings are used on long bridges with sharp curvature requiring a large lateral rotation and displacement. Limited applications recommended due to high cost. before using this type of bearings, consult the Structural Project Manager.

STANDARD FIXED BEARING PAD DESIGN (CONT.)

Standard bearing pads for steel and P/S I-Girders are to be used if possible. Use design and figures provided in this section. Bearing pads for box girders, slabs, and special structures shall be designed in accordance with this section.

Bearings for structures shall be designed according to AASHTO 1996 and interims 1997 and 1998. The design should follow "Method A" (AASHTO Article 14.6.6). Except for compressive stress requirements for plain pads at integral end bents as defined below.

For Plain Elastomer Pad, (AASHTO Article 14.6.6.3.2)

$\sigma_{TL} \leq 0.55$ GS and $\sigma_{TL} \leq 0.80$ ksi

Plain elastomer pad shall be used in integral concrete end bent diaphragms. When this is the case...

$\sigma_{TL} \leq 1.00$ GS and $\sigma_{TL} \leq 0.80$ ksi

For laminated pad, (AASHTO Article 14.6.6.3.2)

$\sigma_{TL} \leq 1.00$ GS and $\sigma_{TL} \leq 1.00$ ksi

ROTATIONAL REQUIREMENT

Rotations shall be taken as the maximum possible change in slope between the top and bottom surfaces of the bearing caused by the initial lack of parallelism between the bottom of girder flange and top of bearing and the girder end rotation due to imposed loads and movements. The following equation must be satisfied to ensure that uplift does not occur under any combination of loads and corresponding rotations:

$\sigma_{TL} \geq 0.50\ GS'(L/T)^2\ \theta_{m,x}$ (AASHTO Article 14.6.6.3.5-1)

Plain elastomeric bearing pads contained within integral concrete diaphragm are not subject to this rotation requirement.

STANDARD FIXED BEARING PAD DESIGN (CONT.)

ROTATIONAL REQUIREMENT (CONT.)

TABLE OF θ m,x (RADIANS) (✳)				
		Maximum Span Length (✳✳✳)	End Bent	Interior Bent
P/S I-GIRDER	Type 2	46'-0"	0.0045	0.0010
	Type 3	57'-0"	0.0050	0.0010
	Type 4	66'-0"	0.0052	0.0010
	Type 6	89'-0"	0.0059	0.0010
	Type 7	110'-0"	0.0051	0.0008
PLATE GIRDERS	42" Web	90'-0"	0.0081	0.0020
	48" Web	100'-0"	0.0080	0.0018
	54" Web	110'-0"	0.0078	0.0018
	60" Web	125'-0"	0.0085	0.0019
	66" Web	140'-0"	0.0093	0.0019
	72" Web	150'-0"	0.0093	0.0019

✳ All of the θ m,x values are calculated for rotations caused by dead loads and live loads only. Additional rotation due to girder camber must be added (in radians) to the values displayed in the table for bearing pad design. A straight line approximation from ℄ bearing to quarter or tenth point is an acceptable method of calculating the camber rotation.

✳✳✳ If the span length exceeds the length shown in the table, the rotations must be recalculated by the designer.

REFERENCES

1996 AASHTO Specifications and 1997 & 1998 Interim - Section 14.

AASHTO CRITERIA - Article 14.6.6.3.6

To ensure stability, the total thickness of elastomer (T) shall not exceed L/3 or W/3

Length (L) - Parallel to the direction of translation.

Width (W) - Perpendicular to the direction of translation.

SYMBOL DEFINITIONS

t = Thickness of plain bearing or individual internal layer of elastomer in a laminated bearing. (preferred min. for plain bearing = 1/2") (1/4" for P/S double tee girders).

tt & tb = Thickness of top or bottom layer laminate with one side not heat bonded to plate (standard = 1/4").

T = Total effective elastomer thickness (summation of t's and tt & tb's).
≥ 2(total temperature movement) = 2 Δ

S = Shape Factor $S = \frac{LW}{2t(L+W)}$ OR $t = \frac{LW}{2(L+W)S}$

For laminated bearings, use the thickest individual layer of the bearing for compression stress check. For rotation, check both t & tt-tb. (AASHTO Article 14.6.6.3.2 and AASHTO Article 14.6.6.3.5)

G = Shear Modulus (PSI) (AASHTO Article 14.3) for design use:

G = 120 PSI 60 Durometer (✳✳)
G = 160 PSI 70 Durometer

above G values are for shear, compression, rotation or duration loads.

θ m,x = Maximum rotation about transverse axis due to initial lack of parallelism plus dead load and live load.

(✳✳) use G = 155 for plain elastomeric pads surrounded by an integral concrete diaphragm.

STANDARD FIXED BEARING PAD DESIGN (CONT.)

SYMBOL DEFINITIONS (CONT.)

P = Average compressive stress in a layer (psi)

P = 0.55 GS and shall not exceed 800 psi; for plain pads (AASHTO Article 14.6.6.3.2)

P = 1.00 GS and shall not exceed 1000 psi; for plain pads contained within an integral concrete diaphragm.

P = 1.00 GS and shall not exceed 1000 psi; for laminated pads (AASHTO Article 14.6.6.3.2)

DL = Service load dead load (pounds or kips)

DL_{min} = DL1 + barrier curb

DL_{max} = DL1 + barrier curb + future wearing surface

LL = service load live load (no impact) (pounds or kips)

At the intermediate bents with 2 bearing pads per girder line, use 1/2 of the live load reaction for each pad.

MoDOT DESIGN REQUIREMENTS

Min. DL = .2(LW) or $\frac{DL}{LW} > 200$ Psi

Max. DL = .5(LW) or $\frac{DL}{LW} < 500$ Psi

Max. (DL+LL) = P(LW) or $\frac{(DL+LL)}{LW} < P <$ 800 Psi for plain pads. 1000 Psi for laminated pads.

Hardness: use 60 Durometer hardness for all bearings, except 70 Durometer pads are used for PTFE expansion bearings.

BEARING TAPER

Fixed plain pads 1/2" thick are used only at integral end bents when the required taper due to girder slope is less than 1/8".

Laminated bearing taper is provided by tapering the top shim to match the slope of the girder to the nearest 1/8" total difference in thickness. Thickness of shims shall be a minimum of 1/8" and a maximum of 1/2". For excessive girder slopes it may be necessary to taper the top two shims.

Tapered layers of elastomer are not allowed.

EXAMPLES:

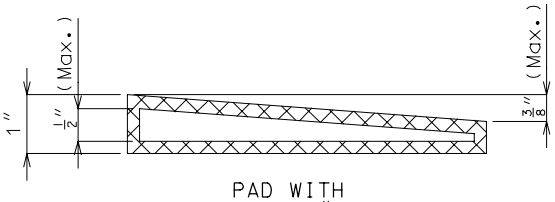

PAD WITH
2-1/4"
LAYERS OF ELASTOMER

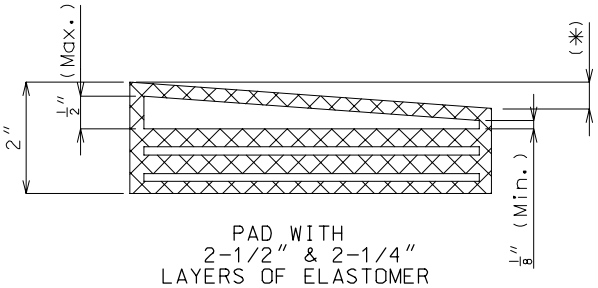

PAD WITH
2-1/2" & 2-1/4"
LAYERS OF ELASTOMER

(*) 3/8" (Max.) for 1 tapered shim
3/4" (Max.) for 2 tapered shims

STANDARD FIXED BEARING PAD DESIGN (CONT.)

PAD DEFLECTION (ELASTOMERIC EXPANSION BEARING)

For expansion bearing design, it is necessary to determine the total temperature movement, Δ.

Δ = (thermal coefficients) (temperature range) (expansion length) (Φ) = total temperature movement

Δ (steel) = (.0000065) (140°) (expansion length) (Φ)

Δ (concrete) = (.000006) (120°) (expansion length) (Φ)

Φ = 1.00 @ int. bent and semi-deep abut.

Φ = 1.25 @ end bent (additional safety factor due to earth pressure)

For the substructure design it is necessary to determine the bearing pad deflection due to shear forces such as longitudinal wind, longitudinal forces from live load, and the temperature.

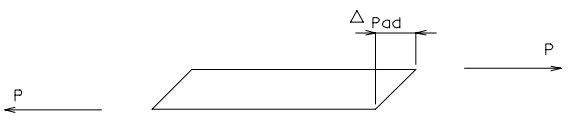

The following equation may be used to compute the pad deflection of an expansion pad.

$$\Delta_{Pad} = \frac{P \times T}{L \times W \times G}$$

This equation can be used to find shear resistance, P, given a pad deflection, where:

P = Shear Force
T = Pad Thickness (elastomer only)
L = Length of Pad
W = Width of Pad
G = Shear Modulus

For distribution of the longitudinal temperature forces and the longitudinal wind forces, the following values of the shear modulus, G, should be used:

60 durometer

G Min. = 150 psi
G Max. = 300 psi

G values above are for temporary loads.

Note: The shear modulus varies with the durometer, temperature and the load duration.

STANDARD ELASTOMERIC BEARING PAD DETAILS FOR P/S GIRDERS

FIXED BEARINGS - All integral end bents

Thickness - use 1/2″ plain pads for I-Girders
use 1/4″ plain pads for Double-Tee girders

Hardness - use 60 hardness

Length and width - see table 3 for I-Girders
see Sec. 3.56 for Double-Tee girders

FIXED BEARINGS - integral intermediate bents

Thickness - use t = 1/2″ tt = 1/4″ tb = 1/4″
use laminated pad with 2 layers of 1/4″ elastomer
"C" = total bearing height = 5/8″

Hardness - use 60 hardness

Length and width - see table 2

EXPANSION BEARINGS

THICKNESS - LAMINATED PADS (✳)						
△ (in.)	t (in.)	tt&tb (in.) (ea.)	T (in.) (✳✳)	Layers t Elast.	Layers tt&tb Elast.	C (in.)
1/2	1/2	1/4	1	1	2	1-1/4
3/4	1/2	1/4	1-1/2	2	2	1-7/8
1	1/2	1/4	2	3	2	2-1/2
1-1/4	1/2	1/4	2-1/2	4	2	3-1/8
1-1/2	1/2	1/4	3	5	2	3-3/4
1-3/4	1/2	1/4	3-1/2	6	2	4-3/8
2	1/2	1/4	4	7	2	5
2-1/4	1/2	1/4	4-1/2	8	2	5-5/8
2-1/2	1/2	1/4	5	9	2	6-1/4

△ = Total temperature movement

t = Thickness of middle layers of elastomer

tt&tb = Thickness of top and bottom layers of elastomer

T = Total effective thickness of elastomer (sum of t and tt&tb)

C = Total thickness including steel shims

Hardness = 60 required

(✳) Use 1/8″ steel shim plates between layers of elastomer

(✳✳) Not less than: Tmin = 2△(AASHTO Article 14.6.6.3.4)
Cmax = 6-1/4″ FOR P/S
FOR C GREATER THAN 6-1/4″ USE PTFE

STANDARD ELASTOMERIC BEARING PAD DETAILS FOR P/S GIRDERS (CONT.)

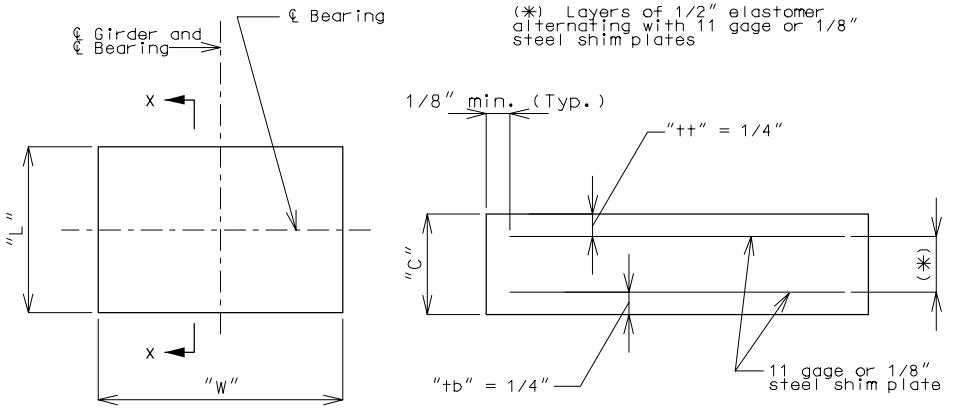

PLAN

SECTION X-X

DETAILS OF LAMINATED ELASTOMERIC BEARINGS FOR P/S STRUCTURES

LAMINATED ELASTOMERIC BEARINGS FOR P/S GIRDERS

DESIGN EXAMPLE

Note: Use the standard bearings if possible. Bearings shall be designed only for special cases.

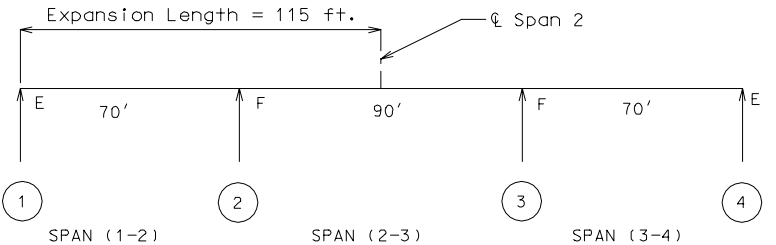

EXPANSION BEARINGS AT BENTS #1 & #4

Type 6 P/S I-Girder, Bottom Flange = 24″

SERVICE LOAD REACTIONS:

DL min = 60.00 kips (DL1 + barrier curb)
DL max = 67.69 kips (DL1 + barrier curb + future wearing surface)

LL = 61.96 kips (impact not included)
Δ = (.000006) (120°) (115 x 12) (1.25) = 1.242″

Min. T = 2 Δ = 2 x 1.242″ = 2.484″ say 2-1/2″

Weff = 24 - 2(3/4) = 22 $\frac{1}{2}$″

Try W = 16″ 16/3 > 2-1/2
Try L = 11″ 11/3 > 2-1/2

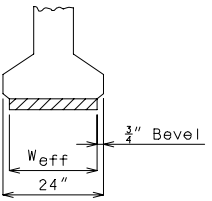

$$S = \frac{L \times W}{2t\ (L+W)}$$

$$S = \frac{11 \times 16}{2(1/2)\ (11+16)} = 6.5185$$

for interior layer

Check thickest layer only for compressive stress

$$S = \frac{11 \times 16}{2(1/4)\ (11+16)} = 13.0370$$

for exterior layer

Pmax = GS = 6.5185(120) = 782 psi < 1000 psi
use P = 782 psi

CHECK MIN. DL (should not include future wearing surface)
DLmin/LW = 60.00/11(16) = .3409 ksi > .200 ksi -OK-

CHECK MAX. DL
DLmax = 67.69/11(16) = .3846 < .500 ksi -OK-

LAMINATED ELASTOMERIC BEARINGS FOR P/S GIRDERS (CONT.)

DESIGN EXAMPLE (CONT.)

Check max. DL + LL

(67.69 + 61.96) / 11(16) = .7366 < .782 -OK-

Check Rotation

$\sigma_{TL} \geq 0.5\ GS(L/T)^2\ \theta_{m,x}$

$\theta_{m,x}$ (for type 6 P/S I-Girder at end bent) = 0.0059

$\sigma_{TL} \geq 0.5(0.120)(13.070)(11/2.5)^2(0.0059)$

$\sigma_{TL} \geq 0.0893$ ksi

0.7366 ≥ 0.0893 ksi -OK-

$$\text{Number of Interior Layers} = \frac{T-tt-tb}{t} = \frac{2.5-0.25-0.25}{0.5} = 4$$

Total thickness C = 2(.25) + 4(.5) + (5 x 1/8) = 3-1/8"

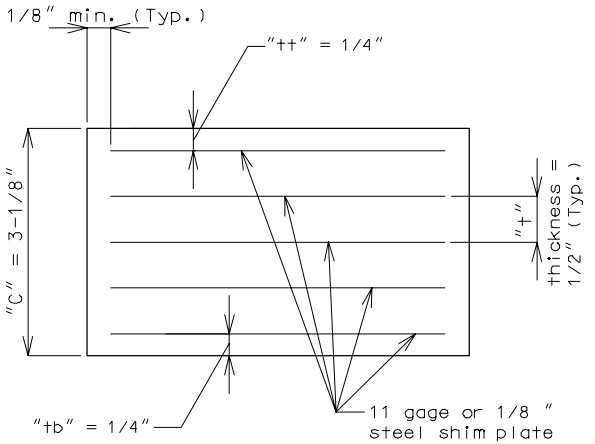

SECTION THRU BEARING

STANDARD ELASTOMERIC BEARING PAD TABLES FOR P/S I-GIRDERS

Table 1

Laminated Expansion Bearings								
Bottom Flange Width	DL + LL Max kips	DL Max kips	DL Min kips	L in ①	W in ①	Shape Factor ② for "tt-tb"	Shape Factor ③ for "t"	P max ksi ④
17	66.7	54.0	21.6	9	12	10.29	5.14	0.617
17	98.0	70.0	28.0	10	14	11.67	5.83	0.700
17	131.6	85.3	34.1	11	15.5	12.87	6.43	0.772
17	151.0	93.0	37.2	12	15.5	13.53	6.76	0.812
17	171.0	100.8	40.3	13	15.5	14.14	7.07	0.848
17	191.5	108.5	43.4	14	15.5	14.71	7.36	0.883
18	66.7	54.0	21.6	9	12	10.29	5.14	0.617
18	98.0	70.0	28.0	10	14	11.67	5.83	0.700
18	137.7	88.0	35.2	11	16	13.04	6.52	0.782
18	165.1	99.0	39.6	12	16.5	13.89	6.95	0.834
18	187.2	107.3	42.9	13	16.5	14.54	7.27	0.873
18	209.9	115.5	46.2	14	16.5	15.15	7.57	0.909
19	74.7	58.5	23.4	9	13	10.64	5.32	0.638
19	98.0	70.0	28.0	10	14	11.67	5.83	0.700
19	137.7	88.0	35.2	11	16	13.04	6.52	0.782
19	179.4	105.0	42.0	12	17.5	14.24	7.12	0.854
19	203.6	113.8	45.5	13	17.5	14.92	7.46	0.895
19	228.7	122.5	49.0	14	17.5	15.56	7.78	0.933
24	186.6	108.0	43.2	12	18	14.40	7.20	0.864
24	245.8	130.0	52.0	13	20	15.76	7.88	0.945
24	308.0	154.0	61.6	14	22	17.11	8.56	1.000
24	337.5	168.8	67.5	15	22.5	18.00	9.00	1.000
24	360.0	180.0	72.0	16	22.5	18.70	9.35	1.000
24	382.5	191.3	76.5	17	22.5	19.37	9.68	1.000
24	405.0	202.5	81.0	18	22.5	20.00	10.00	1.000

Note: For structure with expansion bearing or non-integral bents

① Check minimum "L" ≥ 3T and minimum "W" ≥ 3T

② Based on "tt-tb" = 1/4"

③ Based on "t" = 1/2"

④ Use 60 hardness for shape factor > 5.0, G = 0.120 ksi

STANDARD ELASTOMERIC BEARING PAD TABLES FOR P/S I-GIRDERS (CONT.)

Table 2

Laminated Fixed Bearings							
Bottom Flange Width	DL + LL Max kips	DL Max kips	DL Min kips	L in ①	W in ①	Shape Factor ② for "tt-tb"	P max ksi ③
17	124.0	62.0	24.8	8	15.5	10.55	1.000
17	139.5	69.8	27.9	9	15.5	11.39	1.000
17	155.0	77.5	31.0	10	15.5	12.16	1.000
17	170.5	85.3	34.1	11	15.5	12.87	1.000
17	186.0	93.0	37.2	12	15.5	13.53	1.000
17	201.5	100.8	40.3	13	15.5	14.14	1.000
17	217.0	108.5	43.4	14	15.5	14.71	1.000
18	132.0	66.0	26.4	8	16.5	10.78	1.000
18	148.5	74.3	29.7	9	16.5	11.65	1.000
18	165.0	82.5	33.0	10	16.5	12.45	1.000
18	181.5	90.8	36.3	11	16.5	13.20	1.000
18	198.0	99.0	39.6	12	16.5	13.89	1.000
18	214.5	107.3	42.9	13	16.5	14.54	1.000
18	231.0	115.5	46.2	14	16.5	15.15	1.000
19	140.0	70.0	28.0	8	17.5	10.98	1.000
19	157.5	78.8	31.5	9	17.5	11.89	1.000
19	175.0	87.5	35.0	10	17.5	12.73	1.000
19	192.5	96.3	38.5	11	17.5	13.51	1.000
19	210.0	105.0	42.0	12	17.5	14.24	1.000
19	227.5	113.8	45.5	13	17.5	14.92	1.000
19	245.0	122.5	49.0	14	17.5	15.56	1.000
24	180.0	90.0	36.0	8	22.5	11.80	1.000
24	202.5	101.3	40.5	9	22.5	12.86	1.000
24	225.0	112.5	45.0	10	22.5	13.85	1.000
24	247.5	123.8	49.5	11	22.5	14.78	1.000
24	270.0	135.0	54.0	12	22.5	15.65	1.000
24	292.5	146.3	58.5	13	22.5	16.48	1.000
24	315.0	157.5	63.0	14	22.5	17.26	1.000
24	337.5	168.8	67.5	15	22.5	18.00	1.000

Note: For integral intermediate bents

① Check minimum "L" ≥ 3T and minimum "W" ≥ 3T

② Based on "tt-tb" = 1/4"

③ Use 60 hardness for shape factor > 5.0, G = 0.120 ksi

All the above bearings consist of 2 layers of 1/4" elastomer separated by a 1/8" shim.

For fixed bearings requiring more than 2 layers of 1/4" elastomer and 1 shim plate, use shape factor requirements from table 1.

STANDARD ELASTOMERIC BEARING PAD TABLES FOR P/S I-GIRDERS (CONT.)

Table 3

Plain Fixed Bearings							
Bottom Flange Width	DL + LL Max kips	DL Max kips	DL Min kips	L in	W in	Shape Factor ① for "t"	P max ksi ②
17	86.1	54.0	21.6	9	12	5.14	0.797
17	100.8	63.0	25.2	9	14	5.48	0.800
17	111.6	69.8	27.9	9	15.5	5.69	0.800
17	112.0	70.0	28.0	10	14	5.83	0.800
17	124.0	77.5	31.0	10	15.5	6.08	0.800
17	136.4	85.3	34.1	11	15.5	6.43	0.800
17	148.8	93.0	37.2	12	15.5	6.76	0.800
17	161.2	100.8	40.3	13	15.5	7.07	0.800
17	173.6	108.5	43.4	14	15.5	7.36	0.800
18	86.1	54.0	21.6	9	12	5.14	0.797
18	100.8	63.0	25.2	9	14	5.48	0.800
18	118.8	74.3	29.7	9	16.5	5.82	0.800
18	112.0	70.0	28.0	10	14	5.83	0.800
18	132.0	82.5	33.0	10	16.5	6.23	0.800
18	140.8	88.0	35.2	11	16	6.52	0.800
18	145.2	90.8	36.3	11	16.5	6.60	0.800
18	158.4	99.0	39.6	12	16.5	6.95	0.800
18	171.6	107.3	42.9	13	16.5	7.27	0.800
18	184.8	115.5	46.2	14	16.5	7.57	0.800
19	93.6	58.5	23.4	9	13	5.32	0.800
19	108.0	67.5	27.0	9	15	5.63	0.800
19	126.0	78.8	31.5	9	17.5	5.94	0.800
19	112.0	70.0	28.0	10	14	5.83	0.800
19	128.0	80.0	32.0	10	16	6.15	0.800
19	140.0	87.5	35.0	10	17.5	6.36	0.800
19	154.0	96.3	38.5	11	17.5	6.75	0.800
19	168.0	105.0	42.0	12	17.5	7.12	0.800
19	182.0	113.8	45.5	13	17.5	7.46	0.800
19	196.0	122.5	49.0	14	17.5	7.78	0.800
24	172.8	108.0	43.2	12	18	7.20	0.800
24	192.0	120.0	48.0	12	20	7.50	0.800
24	216.0	135.0	54.0	12	22.5	7.83	0.800
24	208.0	130.0	52.0	13	20	7.88	0.800
24	234.0	146.3	58.5	13	22.5	8.24	0.800
24	252.0	157.5	63.0	14	22.5	8.63	0.800
24	270.0	168.8	67.5	15	22.5	9.00	0.800
24	288.0	180.0	72.0	16	22.5	9.35	0.800
24	306.0	191.3	76.5	17	22.5	9.68	0.800
24	324.0	202.5	81.0	18	22.5	10.00	0.800

Note: For integral end bents, use laminated bearing when taper over 1/8" is required.

① Based on "t" = 1/2"

② Use 60 hardness for shape factor > 4.0, G = 0.155 ksi

STANDARD ELASTOMERIC BEARING PAD TABLES FOR P/S I-GIRDERS (CONT.)

Bearing details for prestressed structures (expansion bearing)

Note: The location of anchor bolts in relation to the slotted holes in the sole plate shall correspond with the temperature at the time of erection. At 60°F the slotted holes should center on the anchor bolts.

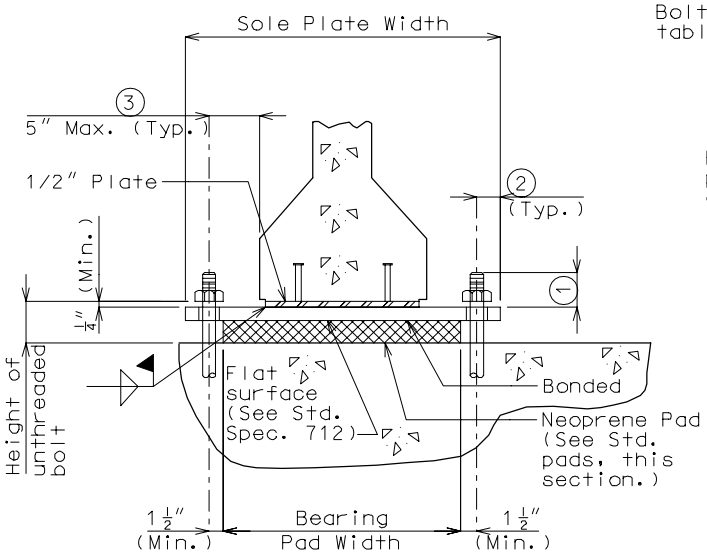

SECTION A-A

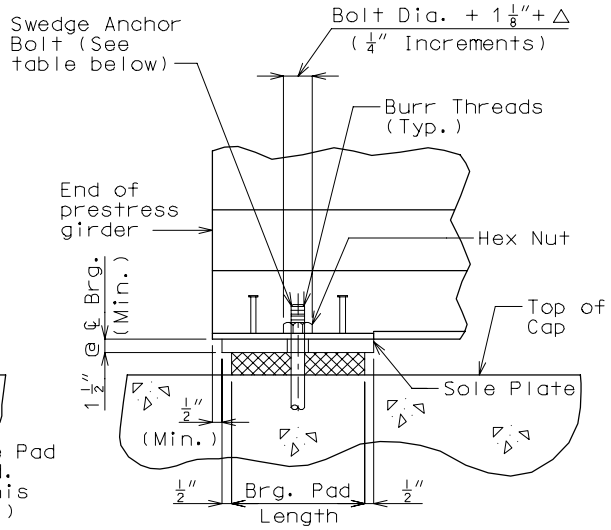

SIDE VIEW

Note: Bevel sole plate to match the slope of girder to the nearest 1/8" total difference in thickness across the plate. Minimum thickness shall be 1-1/2" at centerline bearing and 1" at the edge of bearing. (By design)

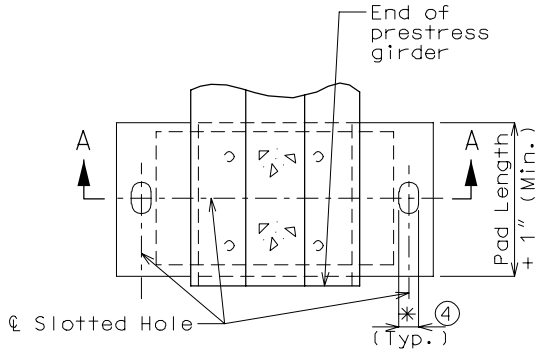

PART PLAN VIEW

	BOLT DIAMETER		
	1 1/2"	2"	2 1/2"
1	2 1/4"	2 1/2"	3"
2	2 1/4" (Min.)	3" (Min.)	3 3/4" (Min.)
3	2" (Min.)	2 3/8" (Min.)	2 5/8" (Min.)
4	1 5/8"	2 1/8"	2 5/8"

Chart based on level bearing pad and 1-1/2" sole plate at ℄ bearing

MAX. DEAD LOAD REACTION SEISMIC PERFORMANCE CATEGORY A (✳✳✳)				
BOLT DIAM.	TOTAL TEMPERATURE MOVEMENT, △ (✳✳)			
	1 1/4"	1 1/2"	2"	2 1/2"
1 1/2"	70 Kips	60 Kips	47 Kips	39 Kips
2"	167 Kips	143 Kips	112 Kips	92 Kips
2 1/2"	326 Kips	281 Kips	220 Kips	180 Kips

All anchor bolts shall be ASTM A709 Grade 50W Steel.

✳ Slot width may be increased on wide roadways to accommodate lateral expansion. See Structural Project Manager.

✳✳ For △ > 2-1/2", use PTFE bearings.

✳✳✳ Seismic Performance Category B,C & D

Design anchor bolts for earthquake restraint. (See Sec. 6.1) Use shear blocks to limit to four anchor bolts.

Seismic Performance Category A

Note: When Service Load Design is used the allowable anchor bolt bending stress (0.55 Fy) is permitted to increase by 50%. Use shear blocks if necessary to limit to two anchor bolts. The above chart is based on a transverse force of 0.2(DL) and a longitudinal force of zero.

STANDARD ELASTOMERIC BEARING PAD DETAILS FOR STEEL GIRDERS

Fixed Bearings - Laminated pad (✳)

Thickness - Use t = 1/2" and tt&tb = 1/4"
Try a total elastomer thickness equal to a value and check rotation requirements.
Try to minimize total elastomer thickness

C = T+[1/8"x(#layers-1)]
Where #layers = (Tx2)+1

Length and Width - Use length and width shown in tables 1 and 2
Table 1 will produce smallest beam cap

Hardness - Use 60 hardness

Expansion Bearings - Laminated pad (✳)

Length and Width - Use length and width shown in tables 1 and 2
Table 1 will produce smallest beam cap

Thickness - Laminated Pads (✳)						
Δ (in.)	t (in.)	tt&tb (in.) (ea.)	T (in.) (✳✳)	Layers t Elast.	Layers tt&tb Elast.	C (in.)
1/2	1/2	1/4	1	1	2	1-1/4
3/4	1/2	1/4	1-1/2	2	2	1-7/8
1	1/2	1/4	2	3	2	2-1/2
1-1/4	1/2	1/4	2-1/2	4	2	3-1/8
1-1/2	1/2	1/4	3	5	2	3-3/4
1-3/4	1/2	1/4	3-1/2	6	2	4-3/8
2	1/2	1/4	4	7	2	5
2-1/4	1/2	1/4	4-1/2	8	2	5-5/8
2-1/2	1/2	1/4	5	9	2	6-1/4

Δ = Total temperature movement

t = Thickness of middle layers of elastomer

tt&tb = Thickness of top and bottom layers of elastomer

T = Total effective thickness of elastomer (sum of t and tt&bb)

C = Total thickness including steel shims

Cmax = 6-1/4" for steel girders (for C greater than 6-1/4" use PTFE for steel girders)

Hardness = 60 required

(✳) Use 1/8" steel shim plates between layers of elastomer

(✳✳) Not greater than: Tmax or less than Tmin for pad size shown in table 1 or 2.

STANDARD ELASTOMERIC BEARING PAD DETAILS FOR STEEL GIRDERS (CONT.)

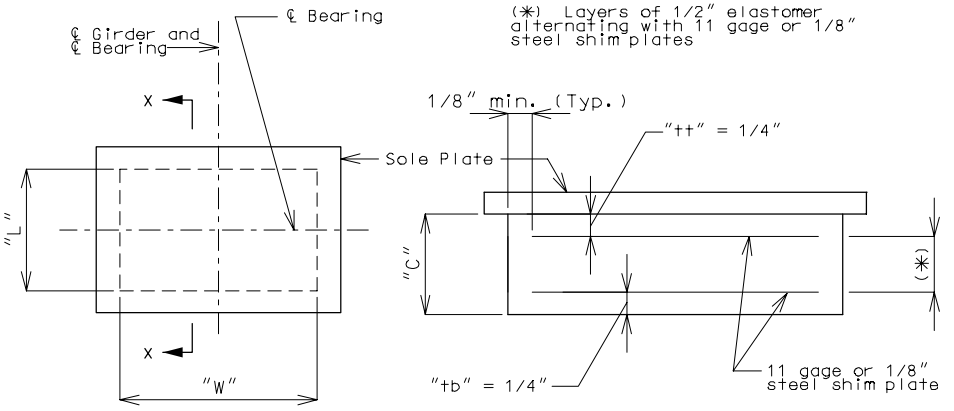

DETAILS OF LAMINATED ELASTOMERIC BEARINGS FOR STEEL STRUCTURES

STANDARD ELASTOMERIC BEARING PAD DESIGN EXAMPLE FOR STEEL GIRDERS

DESIGN EXAMPLE

Structure (99′-99′) Continuous Composite Plate Girder - 48″ Web

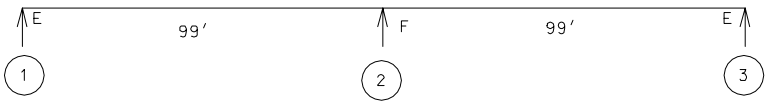

Fixed Bearing at Bent #2

Given: Bottom flange width = 15″

Service Loads: DLmin = 155.0 kips (DL1 + Barrier Curb)
DLmax = 170.4 kips (DL1 + Barrier Curb +FWS)
LL = 165.3 kips (impact not included)
DLmax + LL = 335.7 kips

From Table 1 (use first)
For DL + LL = 335.7: try L = 15 and W = 24
DL + LL = 360.0 > 335.7 -OK-
DLmax = 170.4 < 180.0 -OK-
DLmin = 155.0 kips > 72.0 kips
Bmin = 17 > 15 -NG-

From Table 2
For DL + LL = 335.7: try L = 24 and W = 15
Bmin = 9 < 15 -OK-
Try T = 2.0″

Check Rotation

$\sigma_{TL} \geq 0.5\ GS\ (L/T)^2\ \theta_{m,x}$

$S = 18.46$ (use shape factor for exterior layer)

$\theta_{m,x} = 0.0018$ (48″ Web interior bent)

$\sigma_{TL} \geq 0.5(0.120)(18.46)(24/2)^2\ 0.0018$

$\sigma_{TL} \geq 0.287$ ksi

$\frac{335.7}{24(15)} = 0.9325$ ksi ≥ 0.287 ksi -OK-

Use L = 24″ , W = 15″ , T = 2.0″
#Layer of elastomer = (2″x 2)+1 = 5
C = 2.0 + [1/8 x (5-1)] = 2-1/2″

Expansion Bearings at Bents #1 and #3

Given: Bottom flange width = 12″

Service Loads: DLmax = 39.0 kips
DLmin = 32.0 kips
LL = 58.2 kips
DLmax + LL = 97.2 kips

$\Delta = (6.5 \times 10^{-6})(140)(99)(12)(1.25) = 1.35″ = 1\text{-}1/2″$

From Thickness Table , Bridge Manual Section 3.31-2.5-1
for Δ = 1.50″, T = 3″, C = 3-3/4″

STANDARD ELASTOMERIC BEARING PAD DESIGN EXAMPLE FOR STEEL STRUCTURES (CONT.)

From Table 1 for steel girders, Bridge Manual Section 3.31-2.7-1

For DL + LL = 97.2: try L = 10 and W = 14

Bmin = 9 < 12″ -OK-

DLmax = 70.0 > 39.0 -OK-

DLmin = 28.0 < 32.0 -OK-

Tmax = 3″ < 5″ -OK-

Check Rotation

$\sigma_{TL} \geq 0.5\ GS\ (L/T)^2\ \theta m,x$

$S = 11.67$

$\theta m,x = 0.0080$ (48″ Web interior bent)

$\sigma_{TL} \geq 0.5(0.120)(11.67)(10/3)^2\ 0.0080$

$\sigma_{TL} \geq 0.0622$ ksi

$\frac{97.2}{10(14)} = 0.694$ ksi ≥ 0.0622 ksi -OK-

Sole Plate Designs

Bent #2 - fixed bearing

Use 1-1/2″ min. thickness at centerline on fixed bearing.

Bents #1 and #3 - expansion bearing

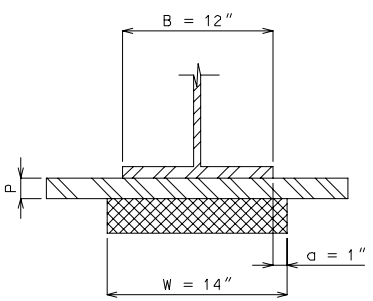

for A36 steel
fs = 20 ksi

$a = (W-B)/2 = (14-12)/2 = 1''$

$R = (DL+LL)(a/W) = 97.2(1/14)$
$= 6.94$ kips

$Ma = R \times a/2 = 6.94(1/2)$
$= 3.47$ in-k

Since: $fs = Mc/I$
$c = P/2$
$I = L \times P^3/12$

Then $P = \sqrt{\frac{Ma \times 12}{2 \times L \times fs}} =$

$P = \sqrt{\frac{3.47 \times 12}{2 \times 10 \times 20}} = .3227 < 1.5$

Use P = 1-1/2″ min.

STANDARD ELASTOMERIC BEARING PAD TABLES FOR STEEL GIRDERS

TABLE 1

L in	W in	Bmin	Tmax	t in	tt-tb in	Δ max	DL + LL max	DL max	DL min	Shape Factor for "t"	Shape Factor for "tt-tb"	Pmax ksi
9	12	9	3.0	0.5	0.25	1.50	66.7	54.0	21.6	5.14	10.29	0.617
10	14	9	3.0	0.5	0.25	1.50	98.0	70.0	28.0	5.83	11.67	0.700
11	16	9	3.5	0.5	0.25	1.75	137.7	88.0	35.2	6.52	13.04	0.782
12	18	11	4.0	0.5	0.25	2.00	186.6	108.0	43.2	7.20	14.40	0.864
13	20	13	4.0	0.5	0.25	2.00	245.8	130.0	52.0	7.88	15.76	0.945
14	22	15	4.5	0.5	0.25	2.25	308.0	154.0	61.6	8.56	17.11	1.000
15	24	17	5.0	0.5	0.25	2.50	360.0	180.0	72.0	9.23	18.46	1.000
16	26	19	5.0	0.5	0.25	2.50	416.0	208.0	83.2	9.90	19.81	1.000
17	28	21	5.0	0.5	0.25	2.50	476.0	238.0	95.2	10.58	21.16	1.000
18	30	23	5.0	0.5	0.25	2.50	540.0	270.0	108.0	11.25	22.50	1.000
20	34	27	5.0	0.5	0.25	2.50	680.0	340.0	136.0	12.59	25.19	1.000

T = Total effective elastomer thickness (sum of "t"'s and "tt-tb"'s)

Δ = Total temperature movement

B = Bottom flange width

Use 60 Hardness, G = 0.120 ksi

Bmin = W-2(3.5), minimum = 9"

Tmax = The minimum of L/3 rounded to the lowest 1/2" and
W/3 rounded to the lowest 1/2".
When Tmax > 5.0", use PTFE bearings

STANDARD ELASTOMERIC BEARING PAD TABLES FOR STEEL GIRDERS (CONT.)

TABLE 2

W in	L in	Bmin	Tmax	t in	tt-tb in	Δ max	DL + LL max	DL max	DL min	Shape Factor for "t"	Shape Factor for "tt-tb"	Pmax ksi
9	12	9	3.0	0.5	0.25	1.50	66.7	54.0	21.6	5.14	10.29	0.617
10	14	9	3.0	0.5	0.25	1.50	98.0	70.0	28.0	5.83	11.67	0.700
11	16	9	3.5	0.5	0.25	1.75	137.7	88.0	35.2	6.52	13.04	0.782
12	18	9	4.0	0.5	0.25	2.00	186.6	108.0	43.2	7.20	14.40	0.864
13	20	9	4.0	0.5	0.25	2.00	245.8	130.0	52.0	7.88	15.76	0.945
14	22	9	4.5	0.5	0.25	2.25	308.0	154.0	61.6	8.56	17.11	1.000
15	24	9	5.0	0.5	0.25	2.50	360.0	180.0	72.0	9.23	18.46	1.000
16	26	9	5.0	0.5	0.25	2.50	416.0	208.0	83.2	9.90	19.81	1.000
17	28	10	5.0	0.5	0.25	2.50	476.0	238.0	95.2	10.58	21.16	1.000
18	30	11	5.0	0.5	0.25	2.50	540.0	270.0	108.0	11.25	22.50	1.000
20	34	13	5.0	0.5	0.25	2.50	680.0	340.0	136.0	12.59	25.19	1.000

T = Total effective elastomer thickness (sum of "t"'s and "tt-tb"'s)

Δ = Total temperature movement

B = Bottom flange width

Use 60 Hardness, G = 0.120 ksi

Bmin = W-2(3.5), minimum = 9"

Tmax = The minimum of L/3 rounded to the lowest 1/2" and
W/3 rounded to the lowest 1/2".
When Tmax > 5.0", use PTFE bearings

STANDARD ELASTOMERIC BEARING PAD TABLES FOR STEEL GIRDERS (CONT.)

(Integral end bents)

(PLAIN FIXED BEARINGS)

"W" (Width) (in)	"L" (Length) (in)	"T" (Thk.) (in)	DL+LL max (kips)	DL max (kips)	DL min (kips)	"S" (Shape Factor)	Pmax ksi
10	10	0.5	77.5	50.0	20.0	5.0	0.775
10	12	0.5	96.0	60.0	24.0	5.5	0.800
10	14	0.5	112.0	70.0	28.0	5.8	0.800
11	10	0.5	88.0	55.0	22.0	5.2	0.800
11	12	0.5	105.6	66.0	26.4	5.7	0.800
11	14	0.5	123.2	77.0	30.8	6.2	0.800
12	12	0.5	115.2	72.0	28.8	6.0	0.800
12	14	0.5	134.4	84.0	33.6	6.5	0.800
12	16	0.5	153.6	96.0	38.4	6.9	0.800
13	12	0.5	124.8	78.0	31.2	6.2	0.800
13	14	0.5	145.6	91.0	36.4	6.7	0.800
13	16	0.5	166.4	104.0	41.6	7.2	0.800
14	12	0.5	134.4	84.0	33.6	6.5	0.800
14	14	0.5	156.8	98.0	39.2	7.0	0.800
14	16	0.5	179.2	112.0	44.8	7.5	0.800
15	14	0.5	168.0	105.0	42.0	7.2	0.800
15	16	0.5	192.0	120.0	48.0	7.7	0.800
15	18	0.5	216.0	135.0	54.0	8.2	0.800
16	14	0.5	179.2	112.0	44.8	7.5	0.800
16	16	0.5	204.8	128.0	51.2	8.0	0.800
16	18	0.5	230.4	144.0	57.6	8.5	0.800
17	14	0.5	190.4	119.0	47.6	7.7	0.800
17	16	0.5	217.6	136.0	54.4	8.2	0.800
17	18	0.5	244.8	153.0	61.2	8.7	0.800
18	16	0.5	230.4	144.0	57.6	8.5	0.800
18	18	0.5	259.2	162.0	64.8	9.0	0.800
18	20	0.5	288.0	180.0	72.0	9.5	0.800
19	16	0.5	243.2	152.0	60.8	8.7	0.800
19	18	0.5	273.6	171.0	68.4	9.2	0.800
19	20	0.5	304.0	190.0	76.0	9.7	0.800
20	18	0.5	288.0	180.0	72.0	9.5	0.800
20	20	0.5	320.0	200.0	80.0	10.0	0.800
20	22	0.5	352.0	220.0	88.0	10.5	0.800

Do not use sole plate.
Impact not included in live load.
Use laminated bearings consisting of two 0.25" layers of elastomer and one beveled plate when taper greater than 1/8" of the bearing is required.

Bearing pad width shall extend to within 1" from the edge of the bottom flange and not extend beyond the edge of the bottom flange.

Use 60 hardness.
Use girder chairs instead of widening beam.

ELASTOMERIC BEARING DETAILS FOR STEEL STRUCTURES

(Expansion bearing)

Note: The location of anchor bolts in relation to the slotted holes in the sole plate shall correspond with the temperature at the time of erection. At 60°F the slotted holes should center on the anchor bolts.

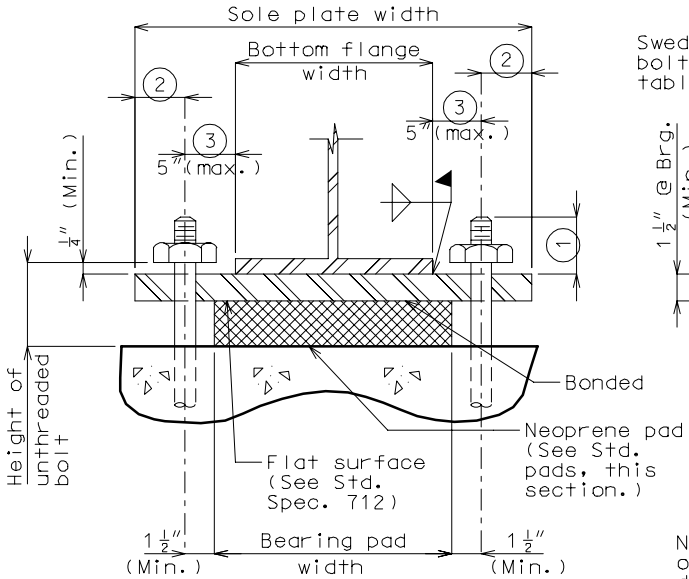

SECTION A-A

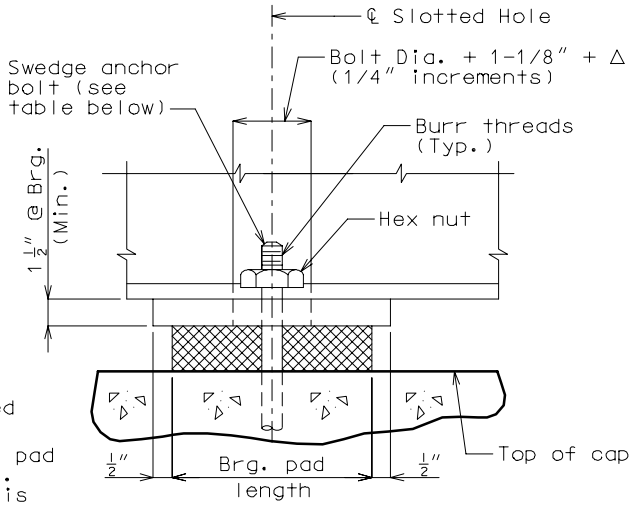

SIDE VIEW

Note: Bevel sole plate to match the slope of girder to the nearest 1/8″ total difference in thickness across the plate. Minimum thickness shall be 1-1/2″ at centerline bearing and 1″ at the edge of bearing. (by design)

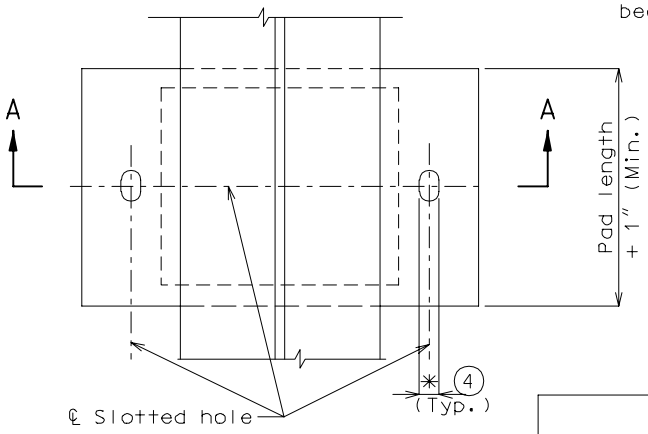

PART PLAN VIEW

	Bolt Diameter		
	1 1/2″	2″	2 1/2″
1	2 1/4″	2 1/2″	3″
2	2 1/4″(Min.)	3″(Min.)	3 3/4″(Min.)
3	2″(Min.)	2 3/8″(Min.)	2 5/8″(Min.)
4	1 5/8″	2 1/8″	2 5/8″

Chart based on level bearing pad and 1-1/2″ sole plate at ℄ Bearing

MAX. DEAD LOAD REACTION SEISMIC PERFORMANCE CATEGORY A (✱✱✱)				
BOLT DIAM.	TOTAL TEMPERATURE MOVEMENT, Δ (✱✱)			
	1 1/4″	1 1/2″	2″	2 1/2″
1 1/2″	70 Kips	60 Kips	47 Kips	39 Kips
2″	167 Kips	143 Kips	112 Kips	92 Kips
2 1/2″	326 Kips	281 Kips	220 Kips	180 Kips

All anchor bolts shall be ASTM A709 grade 50W steel.

✱ Slot width may be increased on wide roadways to accommodate lateral expansion. See Structural Project Manager.

✱✱ For Δ > 2-1/2″, use PTFE bearings.

✱✱✱ Seismic Performance Category B,C & D

Design anchor bolts for earthquake restraint. (See Sec. 6.1) Use shear blocks to limit to four anchor bolts.

Seismic Performance Category A

Note: When service load design is used the allowable anchor bolt bending stress (0.55 Fy) is permitted to increase by 50 percent. Use shear blocks if necessary to limit to two anchor bolts. The above chart is based on a transverse force of 0.2(DL) and a longitudinal force of zero.

ELASTOMERIC BEARING DETAILS FOR STEEL STRUCTURES

(Fixed bearing)

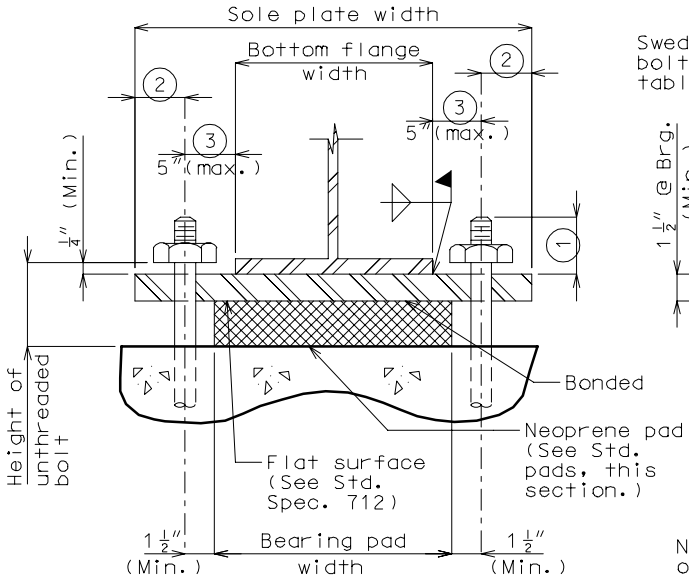

SECTION A-A

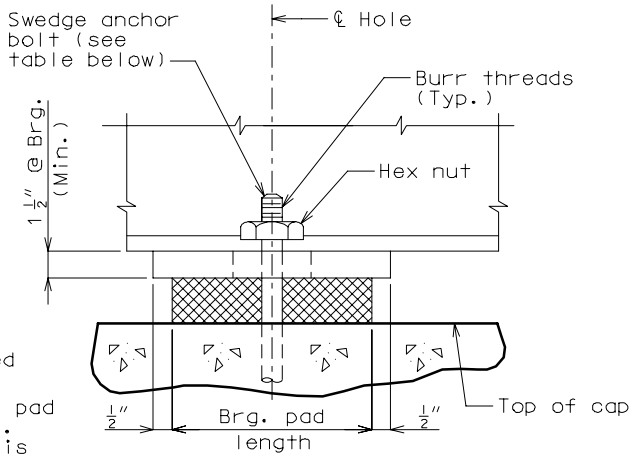

SIDE VIEW

Note: Bevel sole plate to match the slope of girder to the nearest 1/8″ total difference in thickness across the plate. Minimum thickness shall be 1-1/2″ at centerline bearing and 1″ at the edge of bearing. (by design)

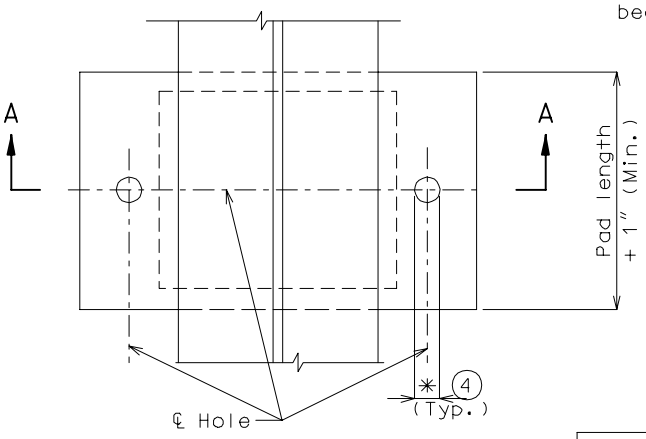

PART PLAN VIEW

	Bolt Diameter		
	1 1/2″	2″	2 1/2″
1	2 1/4″	2 1/2″	3″
2	2 1/4″(Min.)	3″(Min.)	3 3/4″(Min.)
3	2″(Min.)	2 3/8″(Min.)	2 5/8″(Min.)
4	1 5/8″	2 1/8″	2 5/8″

Chart based on level bearing pad and 1-1/2″ sole plate at ℄ Bearing

Horizontal seismic force per bearing (✱✱✱) Seismic Performance Category A (✱✱)				
Bolt Diam.	Bearing Pad Height			
	1 1/4″	1 7/8″	2 1/2″	3 1/8″
1 1/2″	27 kips	20 kips	16 kips	14 kips
2″	64 kips	49 kips	39 kips	33 kips
2 1/2″	126 kips	96 kips	77 kips	65 kips

All anchor bolts shall be ASTM A709 grade 50W steel.

✱ Slot width may be increased on wide roadways to accommodate lateral expansion. See Structural Project Manager.

✱✱ Seismic Performance Category B,C & D

Design anchor bolts for earthquake restraint. (See Sec. 6.1) Use shear blocks to limit to four anchor bolts.

Seismic Performance Category A

Note: When service load design is used the allowable anchor bolt bending stress (0.55 Fy) is permitted to increase by 50 percent. Use shear blocks if necessary to limit to two anchor bolts.

✱✱✱ Horizontal seismic force per bearing $= \sqrt{[(0.20)(\text{girder (DL) reaction})]^2 + [(0.20)\frac{\text{segment weight}}{\text{no. of girder}})]^2}$
where segment weight is the weight of the superstructure between expansion joints when there is one fixed bent. If more than one fixed bent per segment exists, divide out segment weight appropriately.

SOLE PLATE CLIPPING DETAILS

(For steel structures)

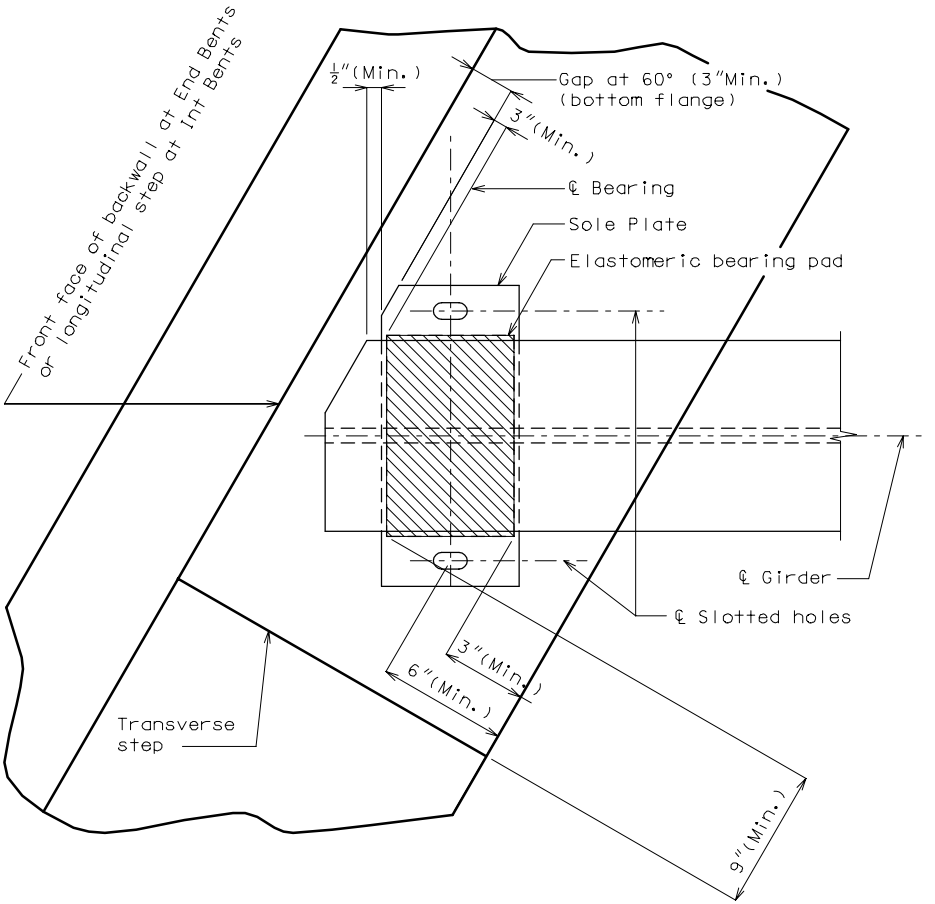

SECTION THRU BEARING

Minimum edge distance shall be maintained on all holes in sole plate.

Slotted holes shown are for expansion bearings.

Round holes shall be used for fixed bearings.

SLIDING BEARING DESIGN

SLIDING BEARING

PTFE sliding bearing shall consist of a lower unit and an upper unit as follows:

The lower unit shall be PTFE bonded to a 1/8" stainless steel plate then to a neoprene pad (See Design Layout).

The upper unit shall be a 1/8" highly polished stainless steel plate bonded to a steel sole plate.

DESIGN DATA:

Lower Unit - Ref. 1996 AASHTO and 1997 & 1998 Interims Section 14 and Mo. Std. Spec. 1038

Use standard bearings. Bearings shall be designed only for special cases. See Structural Project Manager.

Neoprene Elastomeric Pad -

Maximum (DL + LL) Compressive Stress= Pmax. = SG but not greater than 1000 psi max.

Maximum (DL) Compressive Stress = 500 psi
Minimum,(DL) Compressive Stress = 200 psi

1. Use G = 160 psi (70 hardness)
   Maximum Width (W) = Flange Width + 6" (inches)
   Minimum Width = Flange Width

   Then: $(L) = \frac{DL + LL \text{ (kips)}}{Pmax.(W)}$ (inches)

2. Rotations shall be taken as the maximum possible difference in slope between the top and bottom surfaces of the bearing caused by the initial lack of parallelism and the girder end rotation due to imposed loads and movements. The following equation must be satisfied to ensure that uplift does not occur under any combination of loads and corresponding rotations:

   $\sigma_{TL} \geq 0.5\ GS\ (L/T)^2\ \theta m,x$ (AASHTO Article 14.6.6.3.5-1)

   T = Pad thickness (elastomer only)

   $\theta m,x$ = Maximum rotation due to initial lack of parallelism and the girder end rotation due to dead loads and live loads. Designer should check the rotation requirement of the bearing for a specific girder, bearing size and bent type to verify elastomer thickness in the bearing tables are adequate.

   (Refer to page 2.1-3 of this section for table of $\theta m,x$)
   Note: Table does not include rotations due to initial lack of parallelism and camber.

   For neoprene elastomeric pad design use laminated fixed bearing criteria.

   $$S = \frac{LW}{2t(L+W)}$$

   t = The thickness of each individual layer of elastomer. Standard thickness for all layers is 1/2" for the neoprene pads. Use 1/8" steel plate between layers of the elastomer.

SLIDING BEARING DESIGN (CONT.)

3. Use PTFE thickness of 1/16″ (-0 + 1/16″) (AASHTO Article 14.6.2.3.1) length and width same as pad.

Note: Bond PTFE to the 1/8″ stainless steel plate which will in turn be vulcanized to the neoprene pad.

UPPER UNIT

1. Stainless Steel Plate (1/8″ thick)

   Plate Length = pad length + Δ + 1-1/2″ (1/2″ increments)

   Where Δ = Total temperature movement
   (Steel) = (.0000065)(140)(expansion length) (Φ)

   Φ = 1.00 @ Int. Bent and Semi-Deep Abut.

   Φ = 1.25 @ End Bent (Additional safety factor due to earth pressure)

   Plate width = Pad width + 1″

2. Sole Plate (✳) Thickness = 1-1/2″ minimum @ ℄ Brg.
   (1″ absolute minimum at edge)

   Sole Plate Length = Stainless steel plate length + 1″.

   Sole Plate Width = Beam flange width + 8-1/2″ minimum or
   flange width + 17-1/2″ maximum or
   Pad width + 11-1/2″.

   (✳) Use A-36 steel.

   Note: 70 Durometer hardness is to be used for sliding bearings.

SLIDING BEARING TABLES

Neoprene Elastomer Pads
Sliding Bearings: Table 1

LENGTH X WIDTH									
Bearing Pad		Type "N" Neoprene Elastomeric		Bottom flange width in.	Load Capacity			S Shape Factor	Pmax ksi
Length in.	Width in.	Thickness in. ①	No. of Shim Plates ②		DL+LL max. kips	DL max. kips	DL min. kips		
9	12	1.125	1	9	88.9	54.0	21.6	5.14	0.823
10	14	1.125	1	9	130.7	70.0	28.0	5.83	0.933
11	16	1.125	1	10	176.0	88.0	35.2	6.52	1.000
12	18	1.125	1	12	216.0	108.0	43.2	7.20	1.000
13	20	1.750	2	14	260.0	130.0	52.0	7.88	1.000
14	22	1.750	2	16	308.0	154.0	61.6	8.56	1.000
15	24	1.750	2	18	360.0	180.0	72.0	9.23	1.000
16	26	1.750	2	20	416.0	208.0	83.2	9.90	1.000
17	28	1.750	2	22	476.0	238.0	95.2	10.58	1.000
18	30	1.750	2	24	540.0	270.0	108.0	11.25	1.000
19	32	2.375	3	26	608.0	304.0	121.6	11.92	1.000
20	34	2.375	3	28	680.0	340.0	136.0	12.59	1.000
21	36	2.375	3	30	756.0	378.0	151.2	13.26	1.000

Neoprene Elastomer Pads
Sliding Bearings: Table 2

LENGTH X WIDTH									
Bearing Pad		Type "N" Neoprene Elastomeric		Bottom flange width in.	Load Capacity			S Shape Factor	Pmax ksi
Width in.	Length in.	Thickness in. ①	No. of Shim Plates ②		DL+LL max. kips	DL max. kips	DL min. kips		
9	12	1.125	1	9	88.9	54.0	21.6	5.14	0.823
10	14	1.125	1	9	130.7	70.0	28.0	5.83	0.933
11	16	1.125	1	9	176.0	88.0	35.2	6.52	1.000
12	18	1.125	1	9	216.0	108.0	43.2	7.20	1.000
13	20	1.750	2	9	260.0	130.0	52.0	7.88	1.000
14	22	1.750	2	9	308.0	154.0	61.6	8.56	1.000
15	24	1.750	2	9	360.0	180.0	72.0	9.23	1.000
16	26	1.750	2	10	416.0	208.0	83.2	9.90	1.000
17	28	1.750	2	11	476.0	238.0	95.2	10.58	1.000
18	30	1.750	2	12	540.0	270.0	108.0	11.25	1.000
19	32	2.375	3	13	608.0	304.0	121.6	11.92	1.000
20	34	2.375	3	14	680.0	340.0	136.0	12.59	1.000
21	36	2.375	3	15	756.0	378.0	151.2	13.26	1.000

③

① The pad thickness includes thickness of shim plates.

② Locate the 1/8" shim plates between the equal layer layers of 1/2" elastomer.

③ The rotation requirements must be checked for PTFE bearings at end bents for these bearing sizes.

PTFE (Polytetrafluoroethylene) Bearings

SLIDING BEARING DETAILS

Note: The location of anchor bolts in relation to the slotted holes in the sole plate shall correspond with the temperature at the time of erection. At 60°F the slotted holes should center on the anchor bolts.

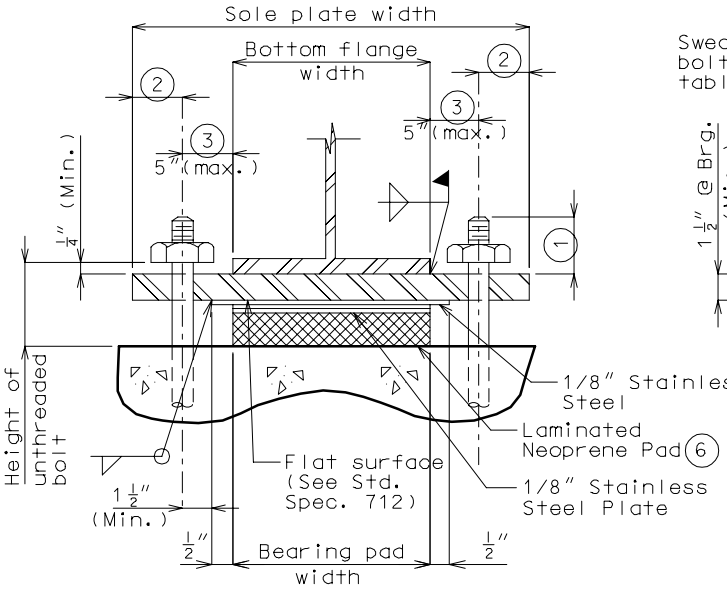

SECTION A-A

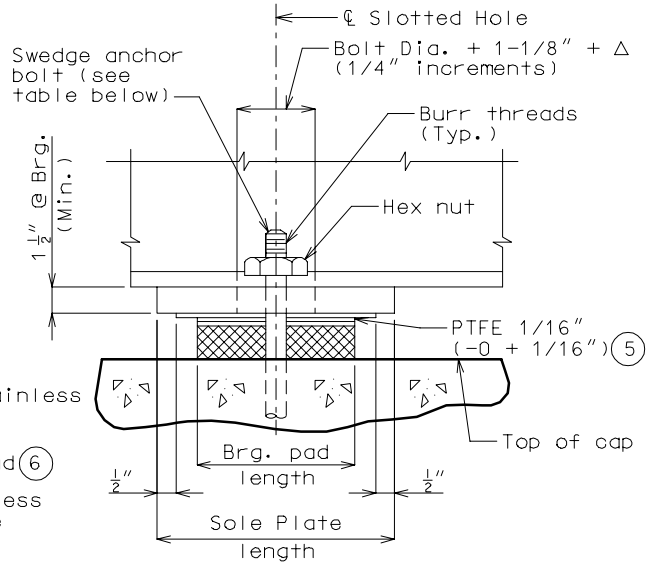

SIDE VIEW

Note: Bevel sole plate to match the slope of girder to the nearest 1/8" total difference in thickness across the plate. Minimum thickness shall be 1-1/2" at centerline bearing and 1" at the edge of bearing. (by design)

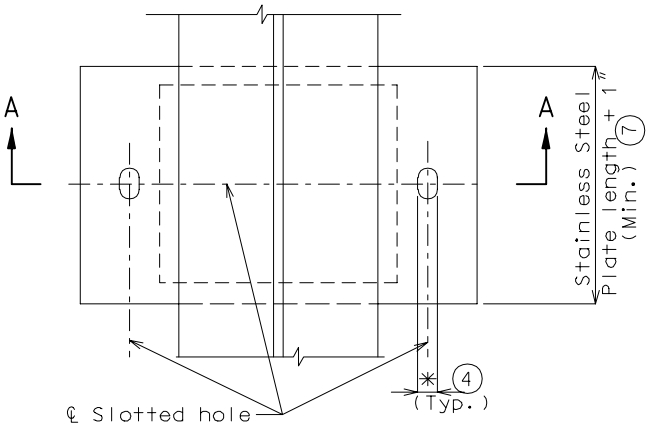

PART PLAN VIEW

	Bolt Diameter		
	1 1/2"	2"	2 1/2"
1	2 1/4"	2 1/2"	3"
2	2 1/4"(Min.)	3"(Min.)	3 3/4"(Min.)
3	2"(Min.)	2 3/8"(Min.)	2 5/8"(Min.)
4	1 5/8"	2 1/8"	2 5/8"

Chart based on level bearing pad and 1-1/2" sole plate at ℄ Bearing

Max. D.L. Reaction Seismic Performance Category A (✱✱)					
Bolt Diam.	Bearing Pad Height				
	1 1/8"	1 3/4"	2 3/8"	3"	3 5/8"
1 1/2"	125 kips	97 kips	79 kips	67 kips	58 kips
2"	296 kips	230 kips	188 kips	159 kips	138 kips
2 1/2"	578 kips	449 kips	368 kips	311 kips	269 kips

All anchor bolts shall be ASTM A709 grade 50W steel.

5 Bond PTFE to the 1/8" stainless steel plate then bond to the neoprene pad.

6 Bond to the brg. seat with approved approved epoxy adhesive.

7 For Stainless Steel Plate length, see page 3.1-2.

✱ Slot width may be increased on wide roadways to accommodate lateral expansion. See Structural Project Manager.

✱✱ Seismic Performance Category B,C & D

Design anchor bolts for earthquake restraint. (See example Sec. 1.2) Use shear blocks to limit to four anchor bolts.

Seismic Performance Category A

Note: When service load design is used the allowable anchor bolt bending stress (0.55 FY) is permitted to increase by 50 percent. Use shear blocks if necessary to limit to two anchor bolts.

SLIDING PLATE DETAILS (CONT.)

Details of the sole plate connection to the prestress girder

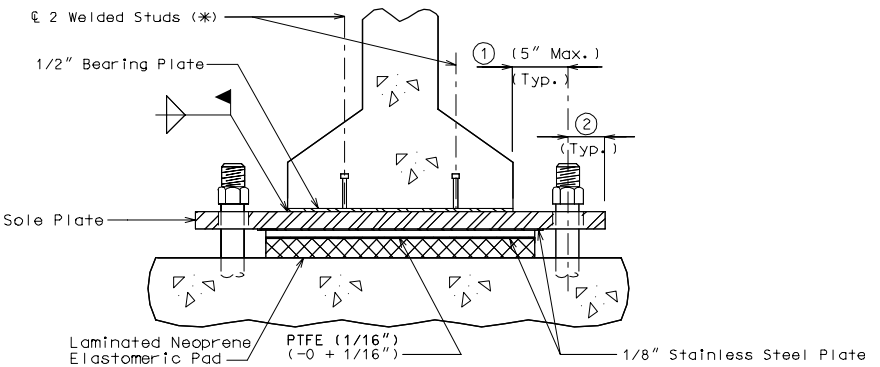

SECTION THRU GIRDER

① 2" Min. for a $1\frac{1}{2}$" Ø anchor bolt
$2\frac{3}{8}$" Min. for a 2" Ø anchor bolt
$2\frac{5}{8}$" Min. for a $2\frac{1}{2}$" Ø anchor bolt

② $2\frac{1}{4}$" Min. for a $1\frac{1}{2}$" Ø anchor bolt
3" Min. for a 2" Ø anchor bolt
$3\frac{3}{4}$" Min. for a $2\frac{1}{2}$" Ø anchor bolt

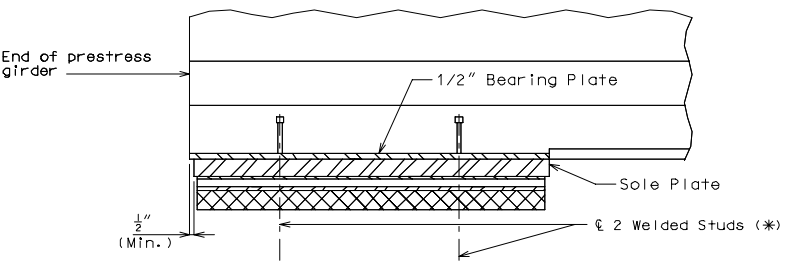

SECTION AT END OF GIRDER

(✳) See Section 3.55 - 1.14.2 for details of 1/2" bearing plate.

Note:
For PTFE bearing details and notes not shown, see preceding pages.

SLIDING BEARING CLIPPING DETAILS

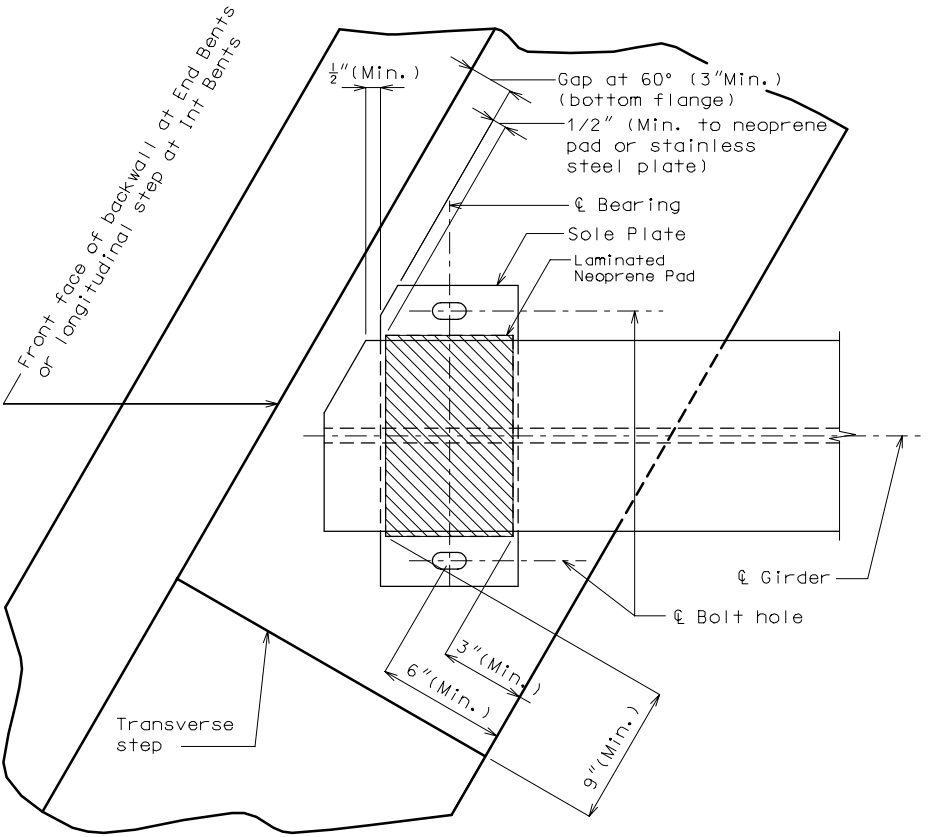

SECTION THRU BEARING

Minimum edge distance shall be maintained on all holes in sole plate.

Slotted holes shown are for PTFE expansion bearings.

Round holes shall be used for PTFE fixed bearings.

HINGED CONNECTION DETAILS

Neoprene and PTFE Bearings

Note: For details of Hinged Connection not shown, See Manual Section 3.30.

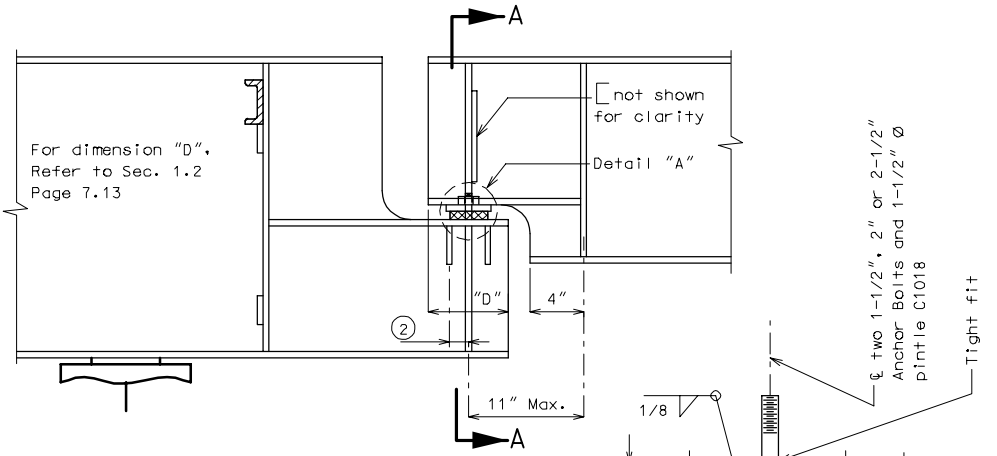

DETAIL "A"

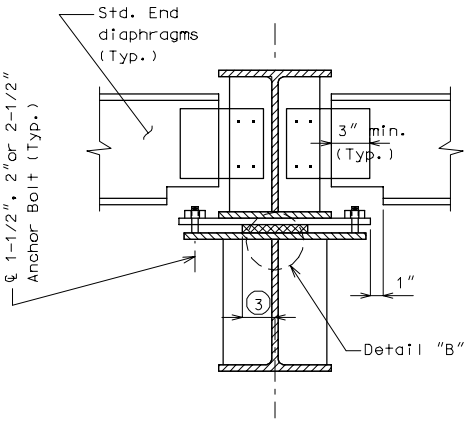

SECTION C-C

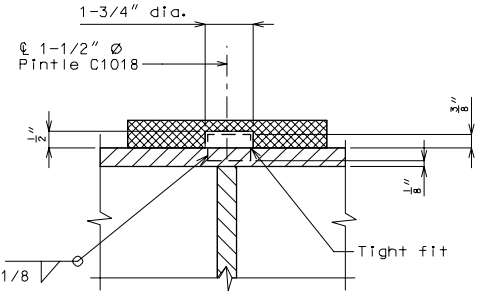

DETAIL "B"

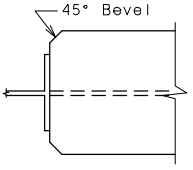

SECTION D-D

1. Use one 1-1/2" Ø Pintle with elastomeric PTFE and Neoprene Bearings for flange width thru 18". Use two 1-1/2" Pintles for flange width greater than 18".
2. Dimension to 1/3 bearing length (Typ.)
3. Dimension to be ½ bearing width for one Pintle and 1/3 bearing with for two Pintles.

BEARING EDGE DISTANCE

Steel or Prestress Girders

Beam Ledges

Beam Ledges are discussed in (AASHTO Article 8.16.6.8.7 (1992)), (AASHTO Article 5.13.2.5 (1994)) See PCA publication "Notes on ACI 318-89" section 17.

Heavy loads placed near the edge of a concrete surface can produce spalling. Two precautions should be taken to avoid the problem. Additional reinforcement should be placed under the load and around the corner. The bearing area of the load should not project beyond the straight portion of the stirrups, nor beyond the interior face of a transverse anchor bar (if one is provided). See Figure 3.31.4.1-1. The recommended distance to a step, or the end of the bent cap in the transverse direction is 9 inches.

Bearing Clearance

When beams are placed end to end at an intermediate bent, the clearance is governed by the bent up strands, diaphragm reinforcement, skew, and any vertical or horizontal curvature in the profile grade. A 9 inch minimum between bearing pads for prestress is a general rule. For simply supported steel or constant depth girders the recommended minimum clearance is 2 inches between bearing pads. See Dimension "C". Also consider transverse girder offsets when using prestress girders on horizontally curved alignments.

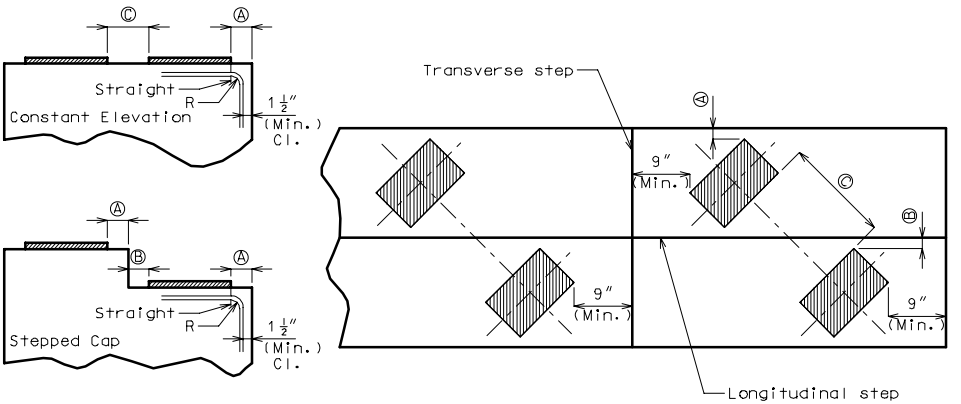

Ⓐ = 3" Min. for #4 stirrups
4.5" Min. for #5 or #6 stirrups

Ⓑ = Provide adequate clearance 1" min. for skew > 15 deg.
2" Min. for skews < 15 deg.

Ⓒ = 9" Min. for prestress when beam is not stepped.
2" Min. for simply supported steel or constant depth girders

Figure 3.31.4.1-1
Bearing Clearance

SUBSTRUCTURE BEAM STEPS AND PADS

DEFERENCE IN BEARING ELEV.	METHOD OF OBTAINING ELEVATION
1/8" or less	Retain in vertical dimension but use no fill plates Use the lower 1/8 " for bent height.
1/4" thru 1/2"	Increase thickness of top plate of bearing or haunch.
5/8" thru 1" and up ✳	Monolithic bearing pad or step beam.

(✳) Use same method of obtaining elevation throughout a structure where practical. Do not mix monolithic bearing pads and steps.

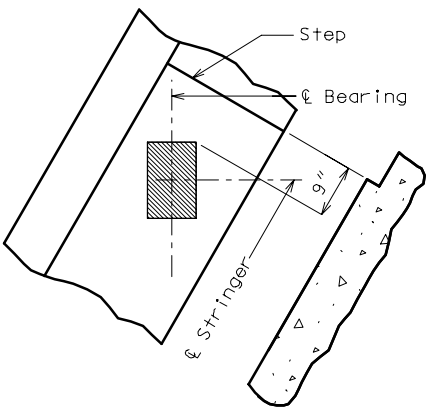

END BENT

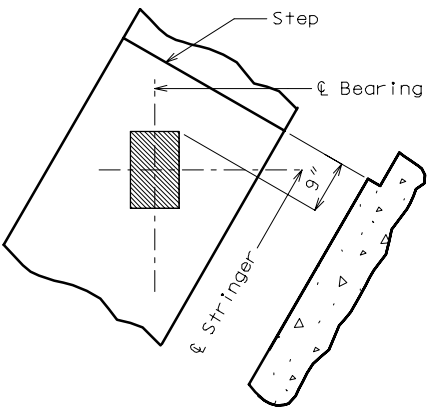

INT. BENT

STEP BEAM

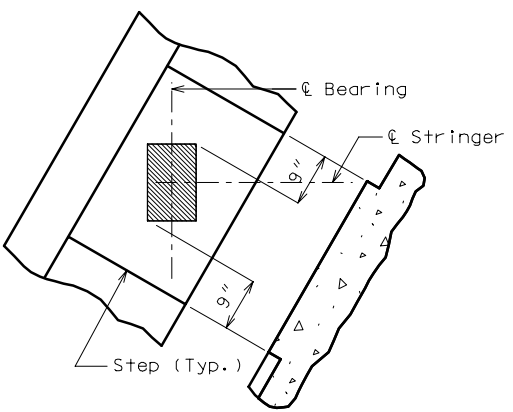

END BENT

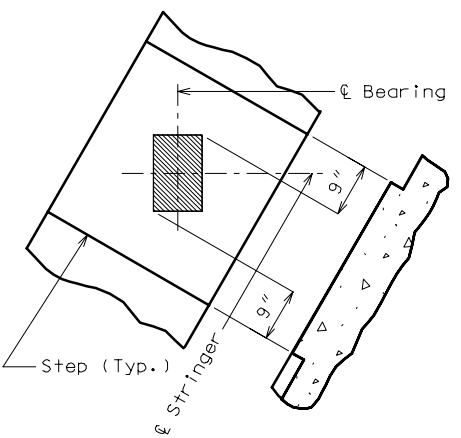

INT. BENT

MONOLITHIC BEARING PADS

ANCHOR BOLTS

Clearance for reinforcement:

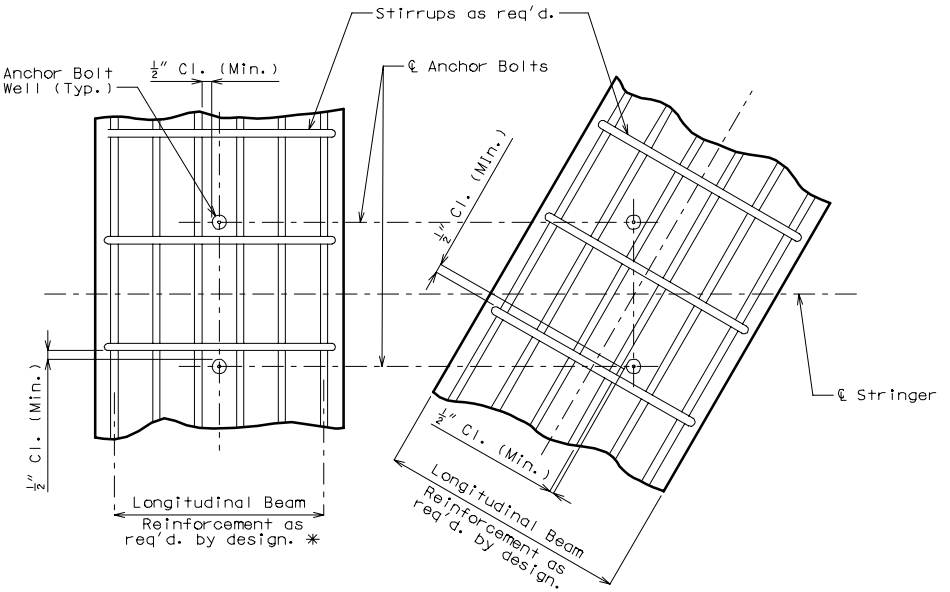

SQUARE SKEWED

PART PLAN OF BEAM TOPS
(INT. BENTS SHOWN)

(✳) Use even number of bars in beam tops for square bridges when possible.

Note: Details shown above are for information only. Place the following note on the plans, preferably with "General Notes".

"All reinforcing bars in the tops of substructure beams or caps shall be spaced to clear anchor bolt wells for bearings by at least 1/2"."

Note: See sheet no. 4.4-1 this section for size of anchor bolt wells.

ANCHOR BOLT TABLES

ANCHOR BOLT DETAILS:

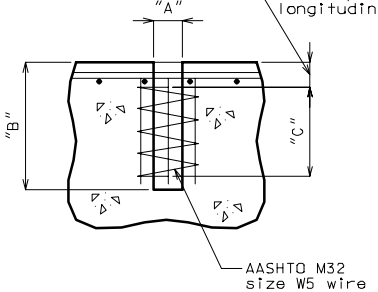

DETAIL OF
ANCHOR BOLT WELLS

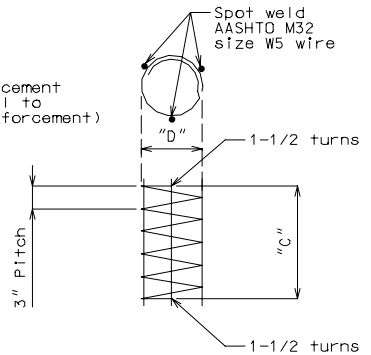

DETAIL OF
SPIRAL REINFORCEMENT

TABLE OF ANCHOR BOLT WELLS						
Anchor Bolt Diameter	"A" Well Diameter	"B" Well Depth	"C" Spiral Depth	"D" Spiral Diameter	Spiral Bar Length	Bolt Extension into Concrete
1"	3"	12"	9"	8-1/8"	15'-1"	9"
1-1/4"	4"	15"	12"	9-1/8"	19'-9"	12"
1-1/2"	4"	18"	15"	9-1/8"	23'-0"	15"
2"	4"	21"	18"	9-1/8"	26'-1"	18"
2-1/2"	4"	28"	25"	9-1/8"	33'-2"	25"

Omit spiral on 21" WF if anchor bolt spacing is less than 6"

TABLE OF BOLT WEIGHTS						
Description		1"	1-1/4"	1-1/2"	2"	2-1/2"
Unthreaded	(#/in.)	----	----	.5	.89	1.39
Threaded	(#/in.)	----	----	.425	.755	1.20"
Nut	(lbs.)	----	----	1.31	2.99	5.64
Weight used for entire bearing	(#/ft.)	2.673	4.175	----	----	----

Anchor bolt sizes were based on 10% dead load reactions as per zone 2 earthquake loads. Check the anchor bolts for any centrifugal forces.

Epoxy coat anchor bolt wells at bents with expansion devices.

(PTFE) BEARING STOPPER PLATE DETAILS

Expansion bearings with two stopper plates
to prevent creep at expansion bearing

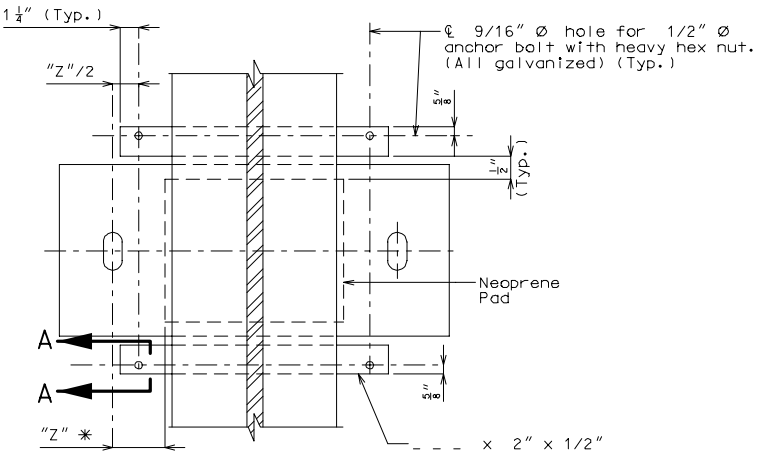

PART PLAN VIEW
(Stopper plate)

✳ Add strap when dimension "Z" is 3" or greater
see page 4.5-2

Note to Detailer:
Make sure top of
bolt for stopper plates
clears bearing plate
for structures on grades.

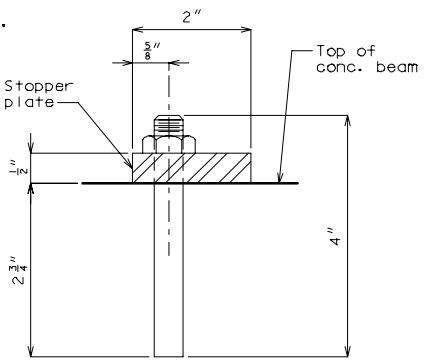

SECTION A-A

See general notes section for notes pertaining to PTFE bearings.

(PTFE) BEARING STOPPER PLATE DETAILS (CONT.)

Bearings with stopper plates and steel straps
to prevent creep at expansion bearings.

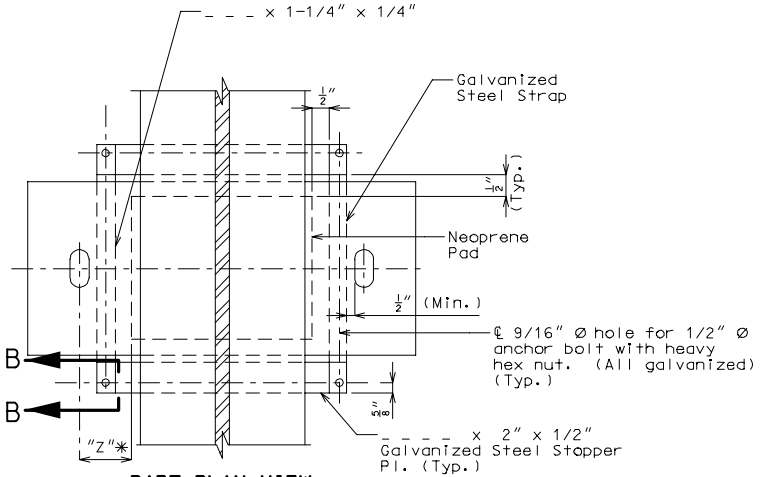

PART PLAN VIEW
(Stopper Plate and Strap)

✳ Add strap when dimension "Z" is 3" or greater.

Note to detailer:
Make sure top of bolt for stopper plates clears bearing plate for structures on grades.

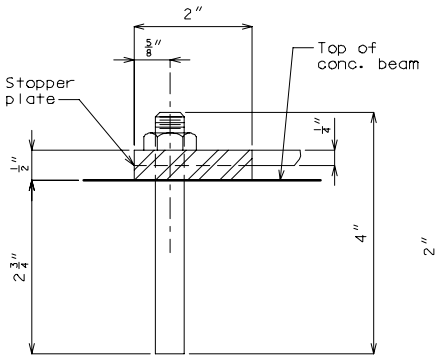

SECTION B-B

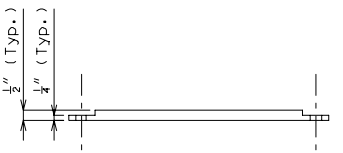

ELEVATION OF GALVANIZED STEEL STOPPER PLATE

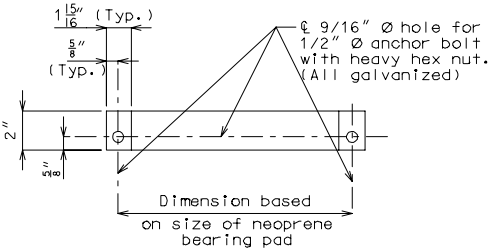

PLAN OF GALVANIZED STEEL STOPPER PLATE

See general notes section for notes pertaining to PTFE bearings.

SWEDGE ANCHOR BOLT DETAILS

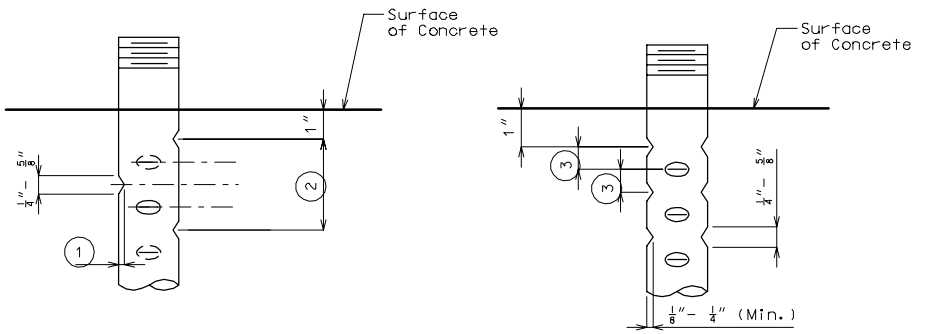

DETAIL "A"

DETAIL "B"

(Optional Detail for 1-3/8" Ø thru 2-1/2" Ø Anchor Bolts

SWEDGE ANCHOR BOLT DETAILS

(1) 1/8" ——— 3/4" Ø thru 1-1/4" Ø Anchor Bolts
1/8" to 1/4" ——— 1-3/8" Ø thru 2-1/2" Ø Anchor Bolts

(2) 2-1/2" to 3-1/2"

(3) 5/8" to 7/8"

Above detail shall be placed on the bearing sheet of all structures using swedge anchor bolts.