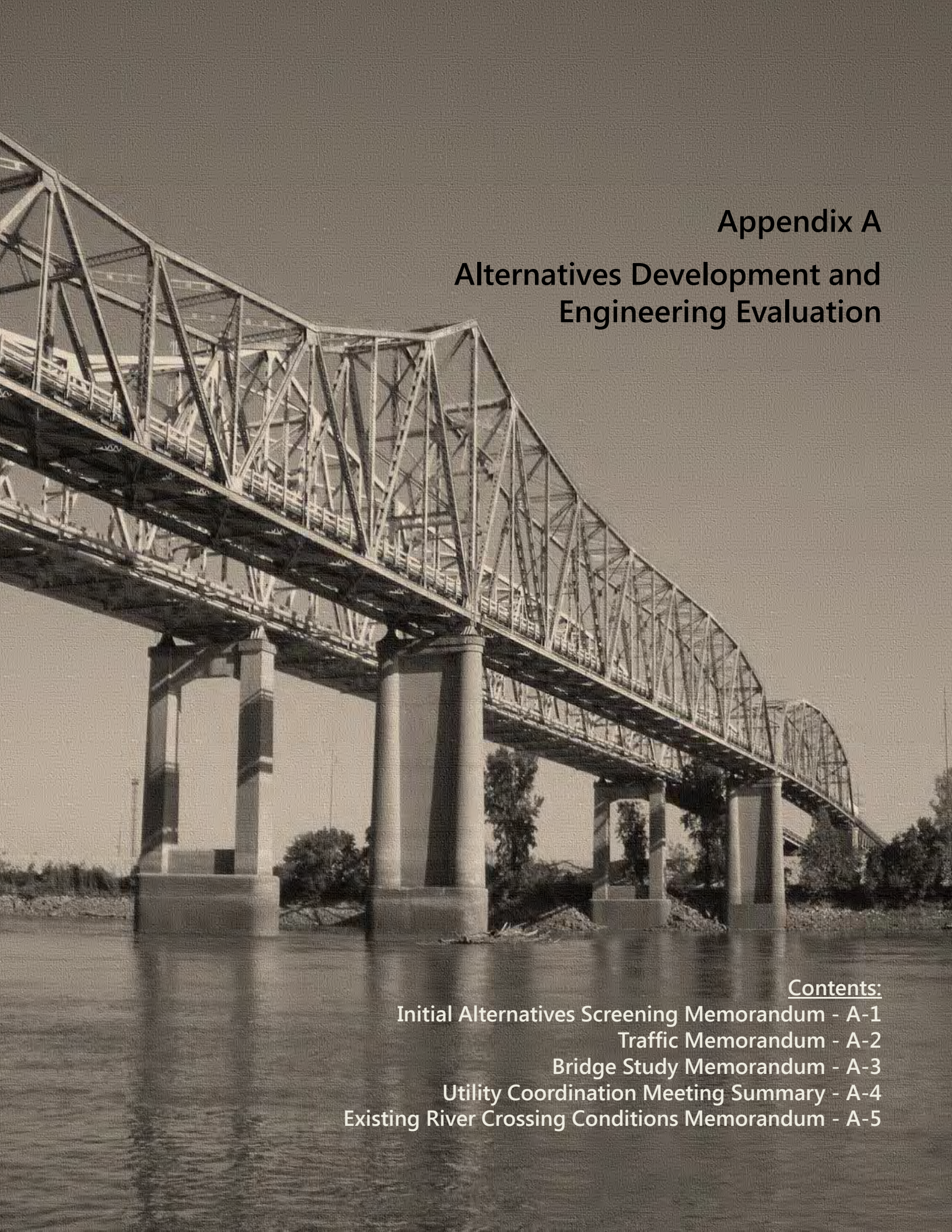

Appendix A

Alternatives Development and Engineering Evaluation

Contents:

Initial Alternatives Screening Memorandum - A-1
Traffic Memorandum - A-2
Bridge Study Memorandum - A-3
Utility Coordination Meeting Summary - A-4
Existing River Crossing Conditions Memorandum - A-5

APPENDIX A-1
Initial Alternatives Screening Memorandum

Missouri Department of Transportation
Kansas City District
600 Northeast Colbern Road
Lee's Summit, Missouri 64086

INITIAL ALTERNATIVES SCREENING MEMORANDUM

February 21, 2013

The purpose of this memorandum is to provide an overview of the process used to conduct a qualitative screening of the initial alternatives developed for the U.S. 69 Bridges over the Missouri River Environmental Assessment (U.S. 69 Bridges EA). Portions of this memorandum will be included in the U.S. 69 Bridges EA and accompanying bridge study report.

1.0 RANGE OF INITIAL ALTERNATIVES

A range of initial alternatives were developed and presented to agencies and the public in November 2012 to address the project Purpose and Need. The initial range of alternatives included:

- **No-Build** – Leave the existing bridges in place while doing continued bridge maintenance. Historic Fairfax Bridge will ultimately fall into disrepair and will most likely need to be permanently closed to traffic.
- **Alternative 1** – Remove the Fairfax Bridge, Platte Purchase Bridge remains in place with two-way, head-to-head traffic.
- **Alternative 2** – Remove Fairfax Bridge and build a new companion two-lane bridge to the Platte Purchase Bridge which will remain in place to carry directional traffic.
  - Option 2A – Build the new bridge upstream from the existing location
  - Option 2B – Build the new bridge along the existing alignment
  - Option 2C – Build the new bridge downstream from the existing location
- **Alternative 3** – Remove and replace, the Fairfax Bridge and the Platte Purchase Bridge, and replace them with a new, two or four-lane bridge
  - Option 3A – Build the new bridge upstream from the existing location
  - Option 3B – Build the new bridge along the existing alignment
    (Depending on the final location and structural design configuration, Option 3B may require traffic to be shut down in one or both directions during a portion of construction).
  - Option 3C – Build the new bridge downstream from the existing location

Current and future projected traffic counts on the bridge confirmed the need to maintain the capacity of a four lane crossing. Furthermore, at a series of stakeholder meetings conducted in October 2012, the option of providing a crossing that would accommodate only two travel lanes was presented. Based on the input received from the stakeholders, particularly business within the Fairfax Industrial District, there was no support for a two-lane bridge. The reliability and safety afforded by maintaining the crossing with a four-lane bridge in comparison with two lanes was a predominant concern expressed by the stakeholders.

2.0 QUALITATIVE SCREENING PROCESS

A qualitative screening matrix (included at the end of this memo) was developed to compare and contrast the initial alternatives and to determine which alternatives would be carried forward for evaluation in the EA. The screening process was based on the transportation needs identified within the study area and general categories of potential environmental effects. Qualitative measures were identified under each screening category. Ratings under each measure were shown as OPEN CIRCLE – HALF-FILLED CIRCLE – FILLED CIRCLE to indicate relative satisfaction of the measure. The ratings indicated the following:

- **OPEN CIRCLE** – the alternative did not or would poorly satisfy the need, or would result in significant impacts.
- **HALF-FILLED CIRCLE** – the alternative would satisfy all or part of the need but possibly with trade-offs such as limited capacity, or would result in negative effects that could be mitigated.
- **FILLED CIRCLE** – the alternative would fully satisfy the need, or would result in no or very minor effects, and/or result in potential future benefits.

Screening Category:		Qualitative Measures:
Purpose and Need	Maintain Infrastructure	▪ Physical Condition of Historic Fairfax Bridge ▪ Physical Condition of Platte Purchase Bridge
	Support Movement of Goods and Freight	▪ Structure supports typical freight vehicle load limits ▪ Structure supports large and oversized freight vehicles
	Maintain Regional Transportation Linkages	▪ River crossing would remain at this location ▪ Crossing handles current travel demand ▪ Crossing would handle forecast future travel demand ▪ Crossing would be open during construction
	Support Non-Motorized Transportation Modes	▪ Provide off-travelway facilities ▪ Provide linkages to local and regional facilities
	Support Continued Economic Vitality on Both Sides of the River	▪ Continued access between Riverside and Fairfax Industrial District supporting business activity and employee travel ▪ Facility would accommodate type and volume of freight traffic forecast in the future.
Environmental Concerns		▪ Impacts on aquatic and terrestrial resources
		▪ Impacts to known hazardous material and waste sites
		▪ Impacts to historic properties
		▪ Impacts to businesses

3.0 SCREENING CATEGORIES AND QUALITATIVE MEASURES

The need statements and categories of potential environmental effects served as the screening categories for the initial alternatives. Qualitative measures were identified under each need statement and environmental category to provide a comparison among the alternatives.

3.1 Maintain Infrastructure

Physical Condition of Historic Fairfax Bridge – Because of the age of the Fairfax Bridge and its classification as structurally deficient, it is not feasible to make major structural improvements in a cost-effective manner to enable the bridge to continue to support traffic service into the future. Due to the historic character of the bridge, any major changes to the bridge to shore up its structural capacity would be subject to review under the provisions of Section 106 of the National Historic Preservation Act (NHPA) to determine whether the improvements would alter the historic character of the bridge. Because cost-effective structural improvements cannot be made to the bridge to maintain its use, the Fairfax Bridge would fall into disrepair and need to be closed to traffic, most likely prior to the project's planning horizon of 2040. Therefore, the No-Build condition which would maintain the Fairfax Bridge in place does not satisfy this project need. All other alternatives that remove the bridge therefore better lend themselves to maintaining the physical transportation infrastructure.

Physical Condition of Platte Purchase Bridge – The Platte Purchase Bridge is considered functionally obsolete due to its narrow roadway width. In addition, the shoulder width and vertical clearance are significantly less than required by current AASHTO design standards. Although not yet currently classified as structurally deficient, it is likely to degrade to that point in the near future based on the most recent inspection reports and scoring. Repairs and continued maintenance could extend the life of the Platte Purchase Bridge to beyond 2040. As the bridge approaches the end of its useful service life, these repairs will become less cost-effective. Therefore, although Alternative 1 would keep the Platte Purchase Bridge in place, maintenance of the structure will be less cost effective as the bridge ages and would only support two-way head-to-head traffic with a narrow roadway width. Alternative 2 would keep the Platte Purchase Bridge in place to serve one direction of travel. It has a similar assessment as the No-Build alternative and Alternative 1. Alternative 3 which replaces both structures with new modern structures would likely substantially reduce future maintenance costs and meet modern geometric requirements in comparison with Alternatives 1 and 2, and is therefore rated as such. Alternative 3 is ranked the highest because the investment would be placed into a new structure, reducing maintenance costs and providing two lanes of directional traffic.

3.2 Support Movement of Goods and Freight

This need relates to how well an alternative provides mobility and accessibility to support continued transport of materials and products between the Fairfax Industrial District, southern Platte County, and the surrounding region. Qualitative measures relate to comparative ability to accommodate typical freight vehicle weight loads and sizes.

Because of the posted load restrictions, limited widths, and vertical clearance, the No-Build Alternative and Alternative 1 do not adequately satisfy this need. Alternative 2 which keeps the Platte Purchase Bridge to carry one direction of traffic is rated with the half-filled circle because a new bridge would only provide improved load carrying capacity and vertical and horizontal clearances for traffic traveling in one direction. Alternative 3 which provides a new modern bridge meeting load and size requirements in both directions fully satisfies this need and is rated as such.

3.3 Maintain Regional Transportation Linkages

This need relates to the importance of maintaining a reliable crossing of the Missouri River that accommodates regular daily traffic while providing capacity to convey traffic diverted from incidents and maintenance activities on adjacent highway bridges. Several qualitative factors were established for rating this need.

River crossing would remain at this location – The structural condition of both bridges precludes them from supporting traffic operations through the 2040 planning horizon without the need for total replacement. This is particularly the case for the Fairfax Bridge which has already been determined to be structurally deficient. The Platte Purchase Bridge may eventually degrade to the same deficient rating to the point where rehabilitation would not be feasible. Therefore, under the No-Build Alternative and Alternative 1, there is a high likelihood that both bridges could be closed to vehicular by the design year 2040. Due to the condition of both bridges and the anticipated cost of repairs to even maintain non-motorized access only on one or both bridges is presumed to be prohibitive. Under Alternative 2, the physical crossing of the river would be maintained, but with limited capacity and until the time when the Platte Purchase Bridge would need to be removed. Alternative 3 would be rated the highest and would provide an improved river crossing at this location.

Crossing provides capacity to serve current travel demand – The existing bridges provide adequate capacity to serve existing travel demand, even under diversion conditions when the I-635 bridge was reduced to one lane in each direction with the simultaneous closure of the Broadway Extension (U.S. 169) as observed in October 2012. Under Alternative 1, with the Fairfax Bridge removed, the Platte Purchase Bridge alone would still provide adequate capacity to handle current traffic (approximately 14,500 vehicles per day). Alternatives 2 and 3 which provide for two lanes in each direction would continue to provide capacity to handle the current travel demand.

Crossing provides capacity to serve future travel demand – Those alternatives that provide four lanes (Alternatives 2 and 3) would provide adequate capacity to handle future travel demand of approximately 25,000 vehicles per day under design year 2040 conditions. However, the limited capacity afforded under the No-Build and Alternative 1 would not provide the required capacity under future traffic forecasts.

Crossing would be open during construction – Under Alternative 2, the Platte Purchase Bridge would remain in place to handle head-to-head traffic during construction of the parallel companion bridge. As an alternate to this, traffic could be restricted to the northbound direction on the Platte Purchase Bridge (similarly to what has been done in the past during maintenance and rehabilitation activities on the Fairfax Bridge). Under the two options under Alternative 3 where the new bridge is constructed upstream or downstream from the existing bridges, traffic could be maintained throughout construction with the exception of minor disruptions during demolition and construction of final crossovers and connections to the existing approach roadways. The option that constructs a new bridge on the same location of the existing bridges could require traffic to be shut down in one or both directions for a substantial period of time, depending on the ultimate exact location and structural design configuration.

3.4 Support Non-Motorized Transportation Modes

This need relates to the opportunities each alternative provides to accommodate non-motorized modes of travel and connections to existing and proposed regional trail systems.

Provide off-travelway facilities – The limited existing deck width on both bridges eliminates opportunities for inclusion of a dedicated trail or lane if two vehicular travel lanes are maintained. A new bridge constructed under Alternatives 2 and 3 would include sufficient width to accommodate a dedicated off-travel way facility.

Provide linkages to local and regional facilities – The width limitations of the existing bridges preclude opportunities for providing linkages to existing and planned trail facilities. The off-travelway facility on a new bridge would provide opportunities for system linkage on both sides of the river. Alternative 3 would provide more flexibility than Alternative 2 since the off-travelway facility could be included on either directional side of the bridge depending on which would best connect to the local and regional trail systems. Under Alternative 2, the non-motorized lane would be built on the travelway direction of the new bridge, depending on whether it would be located upstream or downstream from the Platte Purchase Bridge. This could place limitations or constraints on the best possible connections in comparison with Alternative 3 which could locate the non-motorized lane on either side of the new bridge.

3.5 Support Economic Development on Both sides of the River

This need relates to the capabilities of the alternatives to maintain access and capacity to serve current and planned economic development in Riverside and the Kansas City, Kansas Fairfax Industrial District.

Continued access between Riverside and Fairfax Industrial District supporting business activity and employee travel – The No-Build Alternative and Alternative 1 would provide a less desirable access through 2040 because of the closure of the Fairfax, and possibly, the Platte Purchase Bridge. Regional connections and local access could still be provided from I-635, requiring an approximate three-mile long diversion measured from the I-635/US 69 ramp to the US 69 (or 7th Street) intersection at Sunshine Road. Alternative 2 would maintain a crossing at this location which would support activity, but with limited capacity until the time when the Platte Purchase Bridge would need to be removed. Under Alternative 3, a new four-lane bridge would provide access and capacity through and beyond 2040.

Facility would accommodate type and volume of freight traffic forecast for the future - The No-Build and Alternative 1 would not accommodate future freight volumes necessary to maintain and support economic linkages between the two regions. Under Alternative 2, freight traffic (height, width, and weight) would be restricted in the travel direction carried by the Platte Purchase Bridge, with a ranking reflecting this characteristic. A new bridge built under Alternative 3 would adequately and dependably handle freight movements between both regions well into the future.

3.6 Environmental Concerns

Qualitative effects on the human and natural environment within the study area were also reviewed to determine the differences among the alternatives under consideration. Because of the limited extent of the study area, potential effects were reviewed in the areas of aquatic and terrestrial resources, known hazardous material and waste sites, historic properties, and businesses.

Effects on aquatic and terrestrial resources – Effects to the Missouri River environment, adjacent forested wetlands, threatened and endangered species habitat, and water quality could result from any of the build alternatives. Because no activities beyond roadway and bridge maintenance would take place, the No-Build Alternative would have no discernible effects on aquatic and terrestrial resources. All of the Build Alternatives would result in some level of disturbance, temporary or permanent, that would remove habitat, disturb soils, and result in temporary water quality issues. These effects would be minimized to the extent practicable and with the use of best management practices, would result in less than significant direct, indirect, and cumulative effects.

Effects on known hazardous material and waste sites – Because of the built-up nature of the southern portion of the study area, there may be the potential to affect

hazardous materials or wastes during construction activities involving ground disturbance and structure removal. Because no activities beyond roadway and bridge maintenance would take place, the No-Build Alternative would have no effect on known materials or wastes. All of the Build Alternatives would result in removal of one or both of the existing bridges that could include handling of asbestos associated with bridge components and the pipelines located on the bridges. Removal and relocation of the pipelines could also result in incidental spills of fuels or other petroleum products. Soils removed for construction of new bridge foundations would need to be evaluated and disposed of properly. The effects of these actions would be minimized to the extent practical and with the use of best management practices, would result in less than significant direct, indirect, and cumulative effects.

Effects to historic properties – Only the No-Build Alternative would allow the historic Fairfax Bridge to remain in place. Alternatives 1-3 would all remove the Fairfax Bridge and Alternative 3 would also remove the Platte Purchase Bridge, pending a determination of eligibility under the NHPA. All Build Alternatives were scored the same because of the removal of the Fairfax Bridge. Because of the condition of the Fairfax Bridge, the reuse of the bridge as a non-motorized access in place would be prohibited due to the cost to maintain the structure. With removal of the Fairfax Bridge, mitigation, including archival and photographic documentation, as well as advertising for its purchase, removal, and reuse at an alternate location, would be conducted.

Effects to businesses – Effects to businesses were based on the potential for short-term temporary or long-term permanent effects on access and visibility of a business caused by the project. Although no direct business displacements are anticipated as a result of the project, the loss of access and capacity of the river crossing under the No-Build Alternative and Alternative 1 could contribute to the long-term loss of businesses within the Fairfax Industrial District. Options 2A (Platte Purchase Bridge with new two-lane bridge upstream), 2C (Platte Purchase Bridge with new two-lane bridge downstream), 3A (new four-lane bridge upstream), and 3C (new four-lane bridge downstream) would be supportive of businesses in maintaining access and providing capacity. They would result in only minor short-term effects during construction. The other build options would result in greater short-term effects on accessing the regional transportation system during construction due to lane and structure closures, particularly under Options 2B and 3B where the new bridge would be constructed on the existing bridge alignment.

3.7 Alternatives to be Carried Forward for Detailed Evaluation

In December, MoDOT and FHWA, respectively, agreed to reclassify the environmental study from an EIS to an EA and the removal of a two-lane bridge option as a viable alternative. Alternative 3 has been modified to provide only a new, four-lane bridge. Therefore, based on the results of this initial screening, Alternative 2 (Options 2A, 2B, and 2C) and Alternative 3 (Options 3A, 3B, and 3C) are recommended to be carried forward for detailed evaluation in the Environmental Assessment (EA). Although it does not satisfy the purpose and needs for the project, the No-Build Alternative will be carried forward in the EA for comparison purposes.

US 69 MISSOURI RIVER BRIDGE EA - WYANDOTTE COUNTY, KS/PLATTE COUNTY, MO
MoDOT Project J4P2279B
INITIAL CONCEPT SCREENING MATRIX - FEBRUARY 21, 2013

Screening Category	Purpose and Need												Environmental Concerns			
	Maintain Infrastructure		Support Movement of Goods and Freight		Maintain Regional Transportation Linkages				Support Non-Motorized Transportation Modes		Support Continued Economic Vitality on Both Sides of the River					
Qualitative Measure	Physical Condition of the Historic Fairfax Bridge	Physical Condition of Platte Purchase Bridge	Structure supports typical freight vehicle load limits	Structure supports large and oversized freight vehicles	River crossing would remain at this location	Crossing handles current travel demand	Crossing would handle forecast future travel demand	Crossing would be open during construction	Provide off-travelway facilities	Provide linkages to local and regional facilities	Continued access between Riverside and Fairfax Industrial District supporting business activity and employee travel	Facility would accommodate type and volume of freight traffic forecast in future	Effects on aquatic and terrestrial resources	Effects to known hazardous material and waste sites	Effects to historic properties	Effects to businesses
No Build Alternative Leave existing bridges in place while doing continued maintenance. Fairfax bridge will most likely fall into disrepair and will need to be closed to traffic.	○	○	○	○	○	●	○	N/A	○	○	○	○	●	●	●	○
Alternative 1 Remove historic Fairfax Bridge, Platte Purchase Bridge remains in place with 2-way, head-to-head traffic.	●	○	○	○	○	●	○	N/A	○	○	○	○	◑	◑	○	○
Alternative 2 Remove historic Fairfax Bridge, retain Platte Purchase Bridge, and build new companion bridge.																
Option 2A - new bridge upstream	●	○	◑	◑	●	●	○	◑	●	●	◑	◑	◑	◑	○	◑
Option 2B - new bridge on existing alignment	●	○	◑	◑	●	●	○	◑	●	●	◑	◑	◑	◑	○	◑
Option 2C - new bridge downstream	●	○	◑	◑	●	●	○	◑	●	●	◑	◑	◑	◑	○	●
Alternative 3 Remove both bridges and replace with a new 4-lane bridge																
Option 3A - new bridge upstream	●	●	●	●	●	●	●	●	●	●	●	●	◑	◑	○	●
Option 3B - new bridge on existing alignment	●	●	●	●	●	●	●	◑	●	●	●	●	◑	◑	○	◑
Option 3C - new bridge downstream	●	●	●	●	●	●	●	●	●	●	●	●	◑	◑	○	●

Physcial condition of Historic Fairfax Bridge:
○ Does not improve or effectively manage structural deficiency or substandard geometrics
◑ Takes reasohnable and cost-effective steps to improve or manage condition
● Replaces or effectively improves condition of bridge

Physical Condition of Platte Purchase Bridge:
○ Does not improve or effectively manage substandard geometrics
◑ Takes reasohnable and cost-effective steps to improve or manage condition
● Replaces or effectively improves condition of bridge

Struture supports typical freight vehicle load limits:
○ Does not support standard commercial load limits
◑ Commercial load limits are handled in travel direction or new bridge only
● Accommodated standard commercial load limits

Struture supports large and oversized freight vehicles:
○ Does not provide appropriate vertical and/or horizontal clearances per AASHTO standards
◑ Provides appropriate vertical and/or horizontal clearances per AASHTO standards in travel direction of new bridge only
● Provides appropriate vertical and/or horizontal clearances per AASHTO standards

River crossing would remain at this location:
○ Crossing would be eventually closed due to the conditon of the bridges
◑ N/A
● Crossing would be open and operational in the future

Crossing handles current travel demand:
○ Crossing does not accommodate regualr daily traffic
◑ N/A
● Crossing accommodates regular daily traffic

Crossing would handle forecast future travel demand:
○ Crossing would not accommodate future travel demand because of lmited capacity of two-lane bridge
◑ N/A
● Crossing accommodates regular daily traffic

Crossing would be open during construction:
○ No access across the river would be provided during construction
◑ Limited lanes and traffic service would be open during construction
● All existing lanes would be open during construction

Provide off-travelway facilities:
○ Does not
◑ N/A
● Does

Provide linkages to local and regional facilities:
○ Does not
◑ N/A
● Does

Continued access between Riverside and Fairfax Industrial District supporting business activity and employee travel:
○ Would not
◑ Maintains access but with limited future capacity at the crossing
● Would

Faciltity would accommodate type and volume of freight traffic forecast for the future:
○ Would not because of weight limits and clearance restrictions
◑ Freight movement limited by future capacity at the crossing
● Would

Impacts on aquatic and terrestrial resources:
○ Significant impacts with anticipated mitigation
◑ No significant impacts with/without mitigation
● Complete avoidance of impacts

Impacts to known hazardous material and waste sites:
○ Direct effect on known site(s)
◑ Anticipated footprint adjacent to known site(s)
● No effect, site(s) distant from anticipated footprint

Impacts to historic properties:
○ Removal of historic property
◑ Re-use/rehabilitation of historic bridge, or minor effects/short-term effect during construction, indirect effects
● No effect (adverse or indirect)

Impacts to businesses:
○ Acquisition/relocation and/or permanent negative long-term effects
◑ Short-term effects during construction (including crossing closure); access modification as part of design; and/or potential positive future benefits
● No effects or only minor/short-term effects during constructiuon; positive future benefits

APPENDIX A-2
Traffic Memorandum

Traffic Volume Projections

Environmental Assessment for the Missouri River Bridge on U.S. 69
Platte County, Missouri and Wyandotte County, Kansas
MoDOT Project Number J4P2279B

March 2013

WCI File No. 12-100-509.00

EXECUTIVE SUMMARY

Missouri Department of Transportation (MoDOT) contracted with Burns & McDonnell to develop the Environmental Impact Statement (EIS) for a new US 69 Bridge over the Missouri River between Riverside, Missouri and Kansas City, Kansas. Under subcontract to Burns & McDonnell, Wilson & Company was charged with the responsibility of generating future traffic projections at the river crossing for the purposes of recommending the appropriate lane configuration for the bridge. This report documents the methodology and findings of the study as they relate to future traffic volumes on the bridge and at several nearby intersections. Certain unique conditions were discovered during the study and are documented in this report.

Both, 24-hour and turning movement traffic counts were collected by SE3, LLC under subcontract to Burns & McDonnell in October, 2012. During this time two independent construction projects were active and reduced the number of lanes of traffic carried over the Missouri River. It was observed that due to the lane reductions on other proximate river crossings, traffic was diverting to the Fairfax Bridge during peak traffic periods. Additional traffic data collected in December 2012 confirmed that traffic indeed was diverted from I-635 and US 169 (Broadway Extension). Based on that data, the October 2012 traffic counts were manipulated to generate traffic volumes that are more representative of typical daily conditions.

As originally scoped, traffic was to be projected by application of the recently completed 5-County Travel Demand Model as part of a regional transportation planning study undertaken by the Kansas Department of Transportation (KDOT). However, the 5-County Model for the study area was forecasting traffic at the crossing to be orders of magnitude greater than the published historical counts. Therefore, the current Mid America Regional Council (MARC) EMME/2 model was used to forecast traffic at the river crossing, since the projections were more in line with the historical counts.

Additionally, the project was originally scoped as an Environmental Impact Statement (EIS), but, based on information that was collected early in the process, the project has be converted to an Environmental Assessment (ES).

Upon review of the MARC model in relation to projections in the study area, it was discovered that the nearby Horizons Development located immediately north of the Missouri River was not accounted for in the future model projections. To account for near and long-term development at the site, separate post-process trips were generated for the zone and assigned to the model network to more closely represent current and future traffic at the crossing.

The final traffic forecasts for 2012, 2014, 2017, 2020 and 2040 can be found in **Appendix D** of this report.

TABLE OF CONTENTS

EXECUTIVE SUMMARY **1**
1. Introduction **1**
1.01 - General Information 1
2. Basic Data and Procedures **1**
2.01 - DOT Traffic Counts 1
2.02 - 2012 Traffic Counts 1
2.03 - Five–County Travel Demand Model 2
2.04 - MARC Travel Demand Model 2
2.05 - Zone 272 / Horizons Development 4
2.06 - Diverted Traffic 6
2.07 - Future Traffic Projections 8
Appendix A – Traffic volume Worksheets **9**
Appendix B – Horizons Development **10**
Appendix C – Diverted Traffic Worksheets **18**
Appendix D – Future Traffic Projections **19**

1. INTRODUCTION

1.01 - General Information

The purpose of this report is to document the process and calculations for calculating future traffic volumes in the vicinity of the Fairfax Bridge.

2. BASIC DATA AND PROCEDURES

2.01 - DOT Traffic Counts

Historical traffic data on the US 69 bridge as published by KDOT and MoDOT are shown on **Table 2.1**. Note that the ADT volumes were at their highest at 15,600 vpd in 2005 and 2006, and lowest at 11,500 vpd in 2010. Also note that in 2011, the most recent year of data, the AADT collected by both KDOT and MoDOT was approximately 14,800 vpd.

TABLE 2.1
AADT Traffic Volumes

Year	KDOT ADT	MoDOT ADT
2001	13,200	
2002	13,400	
2003	14,000	
2004	14,200	
2005	15,600	
2006	15,600	
2007	15,400	
2008	15,100	
2009	11,700	
2010	11,500	
2011	14,300	14,780

2.02 - 2012 Traffic Counts

Morning and afternoon peak period turning movement counts were collected at the following intersection by SE3 in October, 2012.

- Kindleberger and Harverster
- Kindleberger and 7th Street Trafficway
- Kindleberger and Brinkerhoff
- Sunshine and Harverster
- Sunshine and 7th Street Trafficway
- Sunshine and Brinkerhoff

Traffic counts were again collected at the Kindleberger Road/7th Street Trafficway intersection on December 12-13, 2012. A summary of the turning movement counts are provided in **Appendix A**.

Note that there were two construction activities in the vicinity of the Fairfax Bridge that had an impact on the traffic counts: (1) Construction on the I-635 Bridge over the Missouri River forced I-635 to be reduced from the normal two-lanes in each direction to one-lane in each direction, and (2) construction on US 169 (Broadway Extension), north

of the Downtown Airport, caused a majority of the Broadway Bridge traffic to be diverted.

It is not fully understood how much additional traffic was diverted to the Fairfax Bridge, and the other study intersections, but by observation of traffic operations and discussions with personnel familiar with the area, traffic was certainly diverted. The supplemental counts collected on December 12 and 13, 2012, were collected to help define the magnitude of diverted traffic. The diversion impacts related to the I-635 and US 169 construction activities are discussed further in Section 2.06 – Diverted Traffic.

2.03 - Five–County Travel Demand Model

The Five-County Travel Demand Model was intended to be used to support the traffic forecasting efforts. However, the model projections for 2012 traffic volumes on the US 69 bridge were approximately two and a half times greater than actual traffic counts. Furthermore, the Five-County Model was noted to generate exceptionally high volumes for all but one of the major river crossings in the Kansas City metropolitan area.

It was agreed up by MoDOT, KDOT, and MARC that, for the US 69 Missouri River crossing, the significant marginal difference between the traffic volumes precluded the Five-County Travel Demand Model as a reliable tool for the future traffic forecasts.

2.04 - MARC Travel Demand Model

Upon determination and agreement that the Five-County Model would not adequately serve the needs of the study, the MARC Travel Demand Model was considered for development of the future traffic projections.

The current MARC assignment is based on a year 2010 calibration, but the projection for 2010 was found to be well within the magnitude of the traffic counts, see **Table 2.2** and **Table 2.3** below.

TABLE 2.2

AADT Traffic Volumes

Traffic Counts and Model Projections

Site Name	Location	2011 MoDOT Counts AADT[2]			2012 5-County Model ADT			2010 MARC Model ADT		
		Total	S	N	Total	S	N	Total	S	N
048-000810-1[3]	MO 291 At MO River Bridge	20,089	9,929	10,160	38,657	18,979	19,678	35,378	17,624	17,754
048-002534-0	I-435 At MO River Bridge (Eastside)	85,696	42,870	42,827	62,389	30,610	31,779	44,362	22,480	21,882
024-000496-0	MO 269 S/O MO 210	20,439	10,320	10,119	38,657	19,678	18,979	12,359	6,644	5,715
	I-35 / I-29 At MO River Bridge[4]									
024-000486-0	MO 9 N/0 MO River Bridge	28,310	14,309	14,002	34,039	17,116	16,923	10,978	5,538	5,440
024-001181-0	US-169 N/O Lou Holland Dr.	40,763	18,845	21,918						
083-000064-0	US 69 S/O I-635	14,780	7,035	7,745	38,132	19,251	18,881	18,891	9,535	9,356
083-000440-0	I-635 1.0 Miles N/O Border	49,731	26,551	23,181	83,027	43,547	39,480	43,989	23,076	20,913
083-000342-0	I-435 N/O Border (Westside)	29,084	14,225	14,859	42,715	20,572	22,143	19,740	9,515	10,225
Travel: 4987[1]	US 69 S/O I-635	13,640	6,487	7,153						
Total		302,532			337,616			185,697		

[1] Current counts provided by MoDOT, 2011 AADT.

[2] MoDOT's 2011 Traffic Volume and Commercial Vehicle Count Map.

[3] MO 291 At MO River Bridge's Site Name is for the Northbound, the Southbound Site Name is 048-000810-3.

[4] Count data not provided due to construction.

TABLE 2.3

Comparison

Site Name	Location	2011 Counts Vs. 2010 5-County			2012 Counts Vs. 2010 MARC		
		Total	S	N	Total	S	N
048-000810-1[3]	MO 291 At MO River Bridge	92.4%	91.1%	93.7%	76.1%	77.5%	74.7%
048-002534-0	I-435 At MO River Bridge (Eastside)	-27.2%	-28.6%	-25.8%	-48.2%	-47.6%	-48.9%
024-000496-0	MO 269 S/O MO 210	89.1%	90.7%	87.6%	-39.5%	-35.6%	-43.5%
	I-35 / I-29 At MO River Bridge[4]						
024-000486-0	MO 9 N/0 MO River Bridge	20.2%	19.6%	20.9%	-61.2%	-61.3%	-61.1%
024-001181-0	US-169 N/O Lou Holland Dr.						
083-000064-0	US 69 S/O I-635	158.0%	173.6%	143.8%	27.8%	35.5%	20.8%
083-000440-0	I-635 1.0 Miles N/O Border	67.0%	64.0%	70.3%	-11.5%	-13.1%	-9.8%
083-000342-0	I-435 N/O Border (Westside)	46.9%	44.6%	49.0%	-32.1%	-33.1%	-31.2%
Travel: 4987[1]	US 69 S/O I-635						
Total		63.8%			-12.7%		

2.05 - Zone 272 / Horizons Development

An observation concerning the MARC Model that raised concern related to the amount of traffic generated by TAZ Zone 272, which includes the Horizons Development in Riverside. As presented in **Table 2.4** below, between 2010, 2020 and 2040, Zone 272 experienced an overall growth of only 0.7% per year. Additionally, the ADT volumes projected across the Fairfax Bridge showed no growth after the year 2010. Given the known current and future development plans for this region, this area of the model required further detailed analysis.

TABLE 2.4

ID	Road	Direction	S9001-S1(272) ADT Volumes			S9002-S2(272) ADT Volumes			S9003-S3(272) ADT Volumes		
			2010	2020	2040	2010	2020	2040	2010	2020	2040
5354-272	Centroid (272)	EB	8400	9000	10400	8400	9000	10400	8400	9000	10400
272-5354	Centroid (272)	WB	8400	9000	10400	8400	9000	10400	8400	9000	10400
5701-15800	7th St Trfwy/US69 (Fairfax Bridge)	NB	0	0	0	700	700	700	700	700	700
5658-5701	7th St Trfwy/US69 (Fairfax Bridge)	SB	0	0	0	700	700	700	700	700	700

NOTES

S9001_S1 – Scenario 1; with no bridge at all (Fairfax location)

S9002_S2 – Scenario 2; 1-lane in each direction at the Fairfax Bridge

S9003_S3 – Scenario 3; 2-lane in each direction at the Fairfax Bridge

Growth at Centroid is exponential 0.7% per a year

To more accurately account for the Horizons Development, a multiple step process was developed. First, all traffic from Zone 272 was removed from the MARC Model. Trip generation for the Horizons Development was then calculated by hand using previously published information as the basis for the trip generation calculations.

In May of 2004, TranSystems Corporation developed an Access Justification Report for the new interchange at I-635 with Horizons and Argosy Parkway. The AJR focused on the major transportation network in the area and trip generation calculations for the Horizons Development were not included in the report. A memo dated June 18, 2008 documenting a Traffic Analysis for I-635/Horizons Vicinity was prepared by TranSystems. That report provide detailed trip generation data and also stated that that 10% of the overall traffic generated by Horizons Development use the US 69 crossing.

Brent Miles, with NorthPoint Development, the developers of Horizons Development, was contacted as a point reference to help validate and update the trip generation calculations. Sketches showing the current proposed plan for Horizons Development can be seen in **Appendix B**. The resulting trip generations from the Horizons Development are shown in **Table 2.5** below. It was also estimated that the entire property would be completely built out by the year 2025. Based on that assumption, it was estimated that 75% of the development would be completed by 2020, and the remainder of the development completed by 2040.

TABLE 2.5

Industrial Park	Jobs	Daily Total	AM			PM		
			Total	Entering	Exiting	Total	Entering	Exiting
Johnson Controls	402	1343	173	151	22	181	38	143
Premium Water	100	334	43	37	6	45	9	36
Marlen International	142	474	61	53	8	64	13	51
Velociti	100	334	43	37	6	45	9	36
Gallagher	50	167	22	19	3	23	5	18
PFG Vistar	77	257	33	29	4	35	7	28
Sub Total		2909	375	326	49	393	81	312
Industrial Park	1000Sq	Total	Total	Entering	Exiting	Total	Entering	Exiting
Horizons Industrial II	150	501	65	57	8	68	14	54
Additional Building	125	418	54	47	7	56	12	44
Additional Building	150	501	65	57	8	68	14	54
Additional Building	175	585	75	65	10	79	17	62
Additional Building	285	952	123	107	16	128	27	101
Additional Building	90	301	39	34	5	41	9	32
Additional Building	90	301	39	34	5	41	9	32
Sub Total		3559	460	401	59	481	102	379
Industrial Park Total		6468	835	727	108	874	183	691
Site 3 Total		14865	1439	769	670	1506	766	740
Casino Total		7040	287	127	160	704	373	331
Trip Total		28373	2561	1623	938	3084	1322	1762
Fairfax Bridge Total		2837	256	162	94	308	132	176

2.06 - Diverted Traffic

When the US 69 Missouri River environmental study commenced, there were two independent, nearby construction activities that appeared to have an impact on the October 2012 traffic counts collected by SE3:

- I-635 Bridge over the Missouri River reduced I-635 from the normal two-lanes in each direction to one-lane in each direction, and

- US 169 (Broadway) north of the Downtown Airport was closed completely, effectively reducing the Broadway Bridge from the normal two-lanes in each direction to a complete closure (note that the bridge was open to Downtown Airport traffic).

It appeared that during the peak periods, I-635 traffic was diverting from I-635 to Route 5 and the Fairfax Bridge to avoid delays at the Missouri River Bridge. Based on observations

of traffic conditions on I-635, it appeared that I-635 traffic did not divert when I-635 conditions were free flow, or even under mild stop-and-go conditions. This confirmed that I-635 traffic diverted predominantly during the morning and evening peak traffic periods.

Therefore, it was determined that the October 2012 counts were inflated due to diverted traffic. To calculate traffic counts that are more representative of normal operations, the K-factor, the proportion of ADT volume occurring in the peak hour, was evaluated and an additional turning movement count was collected.

Traffic count data collected during normal conditions was compared with the count data collected in October 2012. K-factor data as well as volume data is shown below in **Table 2.6**:

TABLE 2.6

Source	24-Hour Count	Daily Traffic Vol	Peak Hour	Calculated K-Factor
KDOT	June 2005	16,000	1,950	12%
SE3	October 9, 2012	24,550	3,700	15%
SE3	October 10, 2012	24,950	3,950	16%
Note: All ADT and Peak Hour Volume rounded to nearest 50 vehicles				

Note that the Daily and Peak Hour traffic volumes were substantially higher during the October 2012 count as compared with the June 2005 count. Also note that the June 2005 count is consistent with the historical traffic data shown in Table 2.1. Finally, note that the K-factor for the October 2012 counts was higher than the June 2005, which is consistent with the observed pattern of more diversions during the peak hours as opposed to diversions consistently over a full day.

By early December 2012, both construction projects were completed and both river crossings were returned to normal traffic conditions. A turning movement count was collected at Kindleberger Road/7th Street Trafficway intersection to help define the magnitude of diverted traffic. A summary of the October 2012 and December 2012 counts from Kindleberger Road/7th Street Traffic is shown in **Table 2.7** below:

TABLE 2.7

Source	Count Date	PM Peak Hour Vol
SE3	October 2012	3,450
SE3	December 2012	1,300

Based on the above information, the October 2012 traffic counts were determined to be higher than normal due to nearby construction that resulted in travel delays and diverted traffic. A planning ADT volume of 14,500 was determined to be an appropriate value based on the historical counts which suggest no consistent trend relating to traffic growth or reduction over the years of record. A 9% 'k' factor applied to the December 2012 peak hour count would project to about 14,500 which is a reasonable value for the urban metropolitan area. This value is less than the 12% observed in the June 2005 KDOT count and the more recent October 2011 count which occurred during the heavy diversion period.

The October 2012 traffic volumes across the Fairfax Bridge were modified as follows:

- AM peak hour traffic volumes were reduced by 56%
- PM peak hour traffic volumes were reduced by 62%

These reductions were logically distributed through all of the October 2012 counts based on connected turning movements, and can be found in **Appendix C**.

2.07 - Future Traffic Projections

Future traffic projections, see **Appendix D**, were developed by including the following procedures:

- The 2012 traffic counts by SE3 were used as the base counts to support the estimate of an ADT value for future projections.
- 2012 traffic volumes were calculated from the 2012 traffic counts by lowering the counts based on diverted traffic impacts, and confirmed by an additional peak hour count in December 2012.
- Projected background volume growths were calculated for the MARC Model periods: 2010 to 2020 and 2010 to 2040.
- 2020 traffic projections were calculated by growing the 2012 traffic volumes using the projected background volume growths calculated between the 2010 to 2020 MARC Models and adding the 2020 trip generation from Horizons Development.
- 2040 traffic projections were calculated by growing the 2012 traffic volumes using the projected background volume growths generated using the 2010 to 2040 MARC Models and adding the 2040 trip generation from Horizons Development.
- 2014 and 2017 traffic conditions were also calculated, based on a straight line growth from the 2012 traffic volumes and the 2020 traffic projections.

TABLE 2.8

Year	Projected ADT Across the Fairfax Bridge
2012	14,500
2014	14,822
2017	15,311
2020	17,500
2040	21,856

APPENDIX A – TRAFFIC VOLUME WORKSHEETS

Existing 2012 AM Peak Hour Traffic Volume Worksheet
Future 2020 AM Peak Hour Traffic Volume Worksheet
Future 2040 AM Peak Hour Traffic Volume Worksheet
Existing 2012 PM Peak Hour Traffic Volume Worksheet
Future 2020 PM Peak Hour Traffic Volume Worksheet
Future 2040 PM Peak Hour Traffic Volume Worksheet

Made By:	*jai*	*Date:*	*12/5/12*
Checked By:		*Date:*	
WCEA Project Number:	*12-100-509-00*	*Sheet:*	*1 of 6*

Calculations For: *Existing 2012 AM Peak Hour Traffic Volume Worksheet*

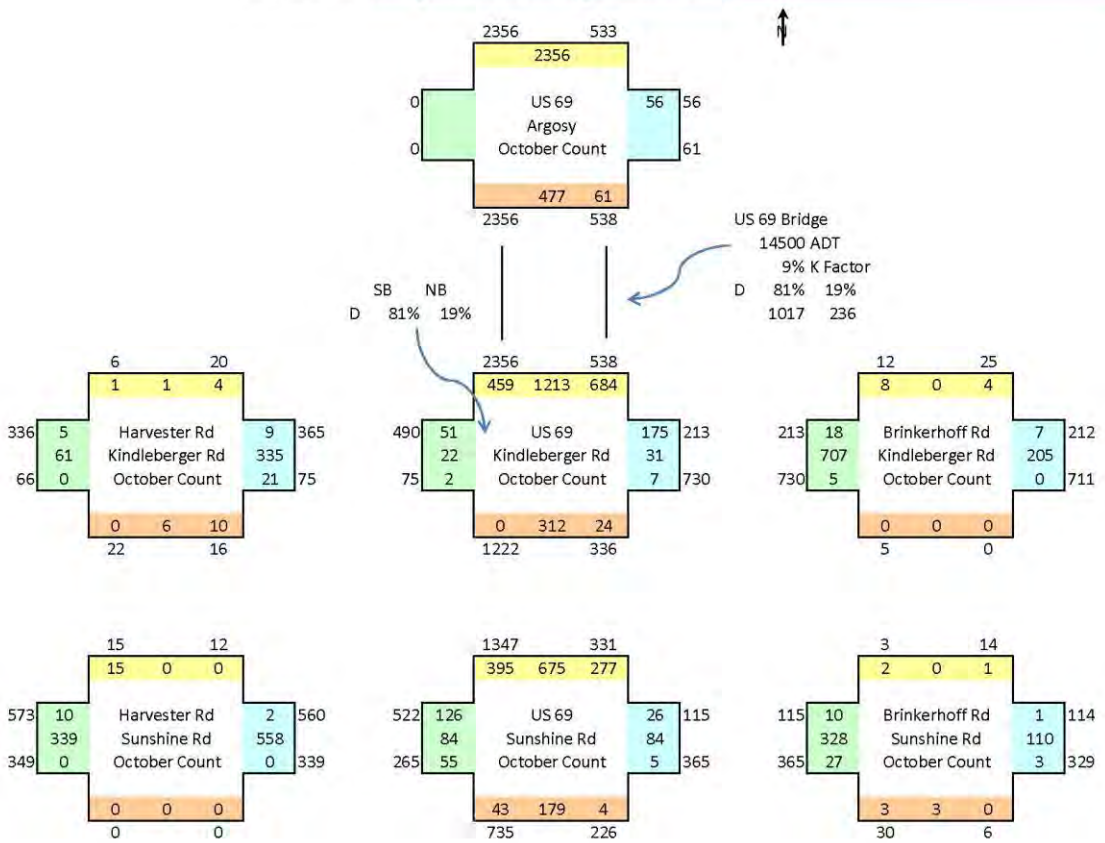

A-1

Made By:	*jai*	*Date:*	*12/5/12*
Checked By:		*Date:*	
WCEA Project Number:	*12-100-509-00*	*Sheet:*	*2 of 6*

Calculations For: *Future 2020 AM Peak Hour Traffic Volume Worksheet*

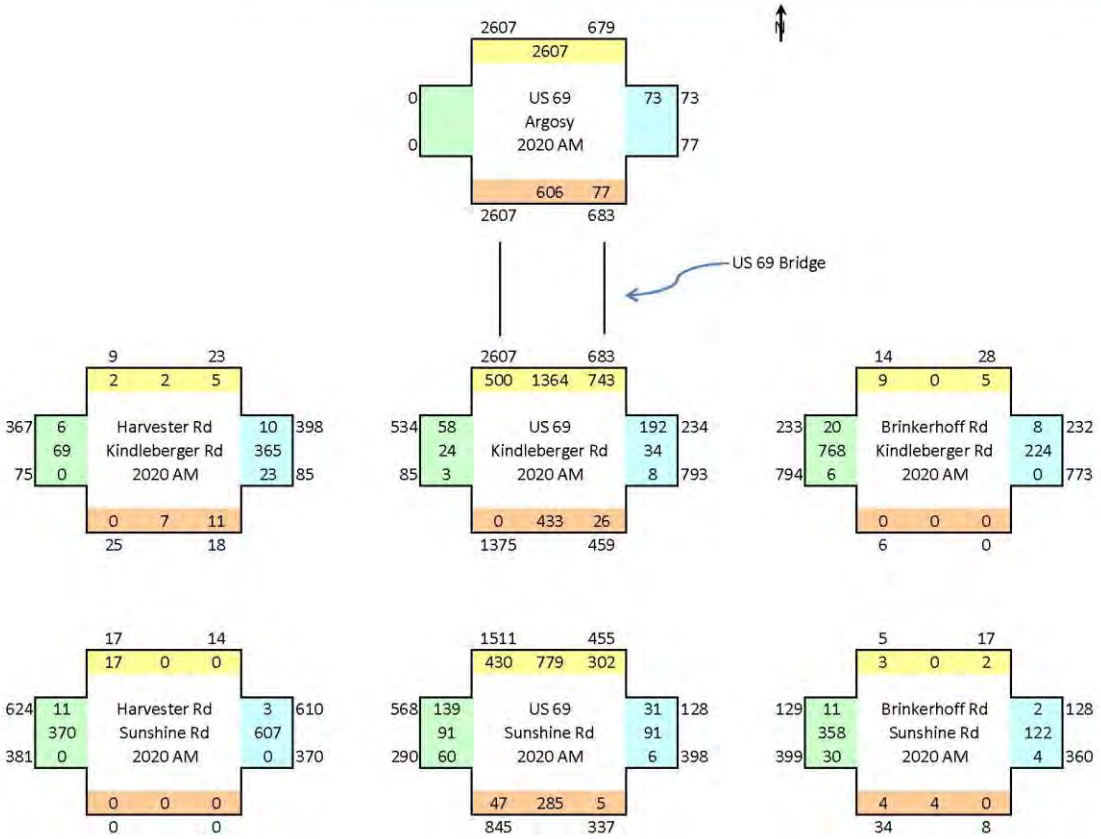

A-2

Made By:	*jai*	*Date:*	*12/5/12*
Checked By:		*Date:*	
WCEA Project Number:	*12-100-509-00*	*Sheet:*	*3 of 6*

Calculations For: *Future 2040 AM Peak Hour Traffic Volume Worksheet*

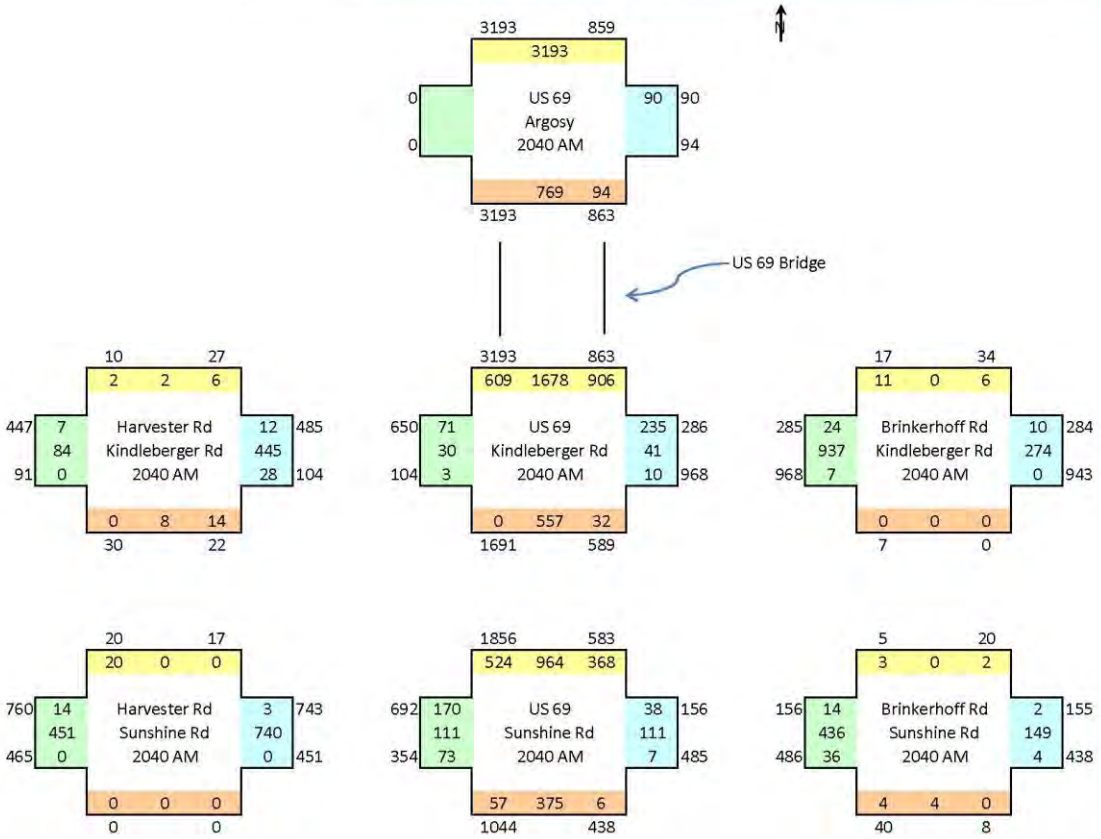

A-3

Made By:	*jai*	*Date:*	*12/5/12*
Checked By:		*Date:*	
WCEA Project Number:	*12-100-509-00*	*Sheet:*	*4 of 6*

Calculations For: *Existing 2012 PM Peak Hour Traffic Volume Worksheet*

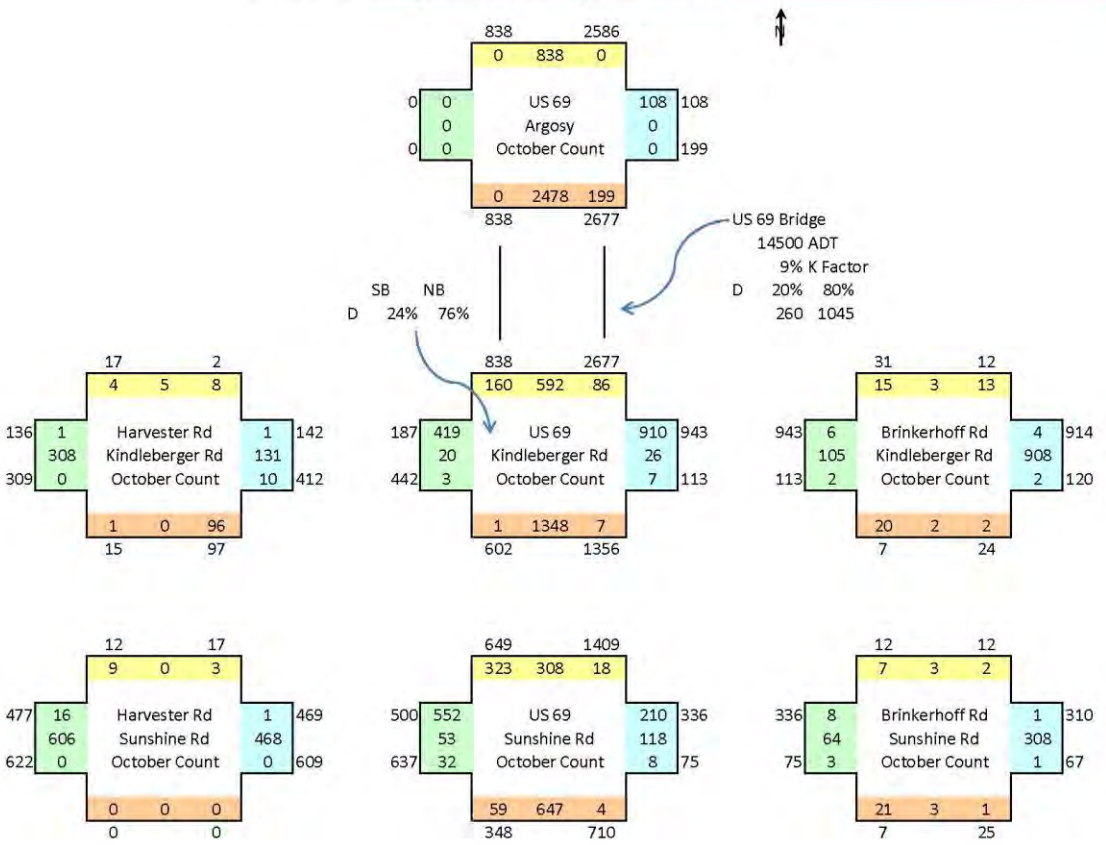

A-4

Made By:	*jai*	*Date:*	*12/5/12*
Checked By:		*Date:*	
WCEA Project Number:	*12-100-509-00*	*Sheet:*	*5 of 6*

Calculations For: *Future 2020 PM Peak Hour Traffic Volume Worksheet*

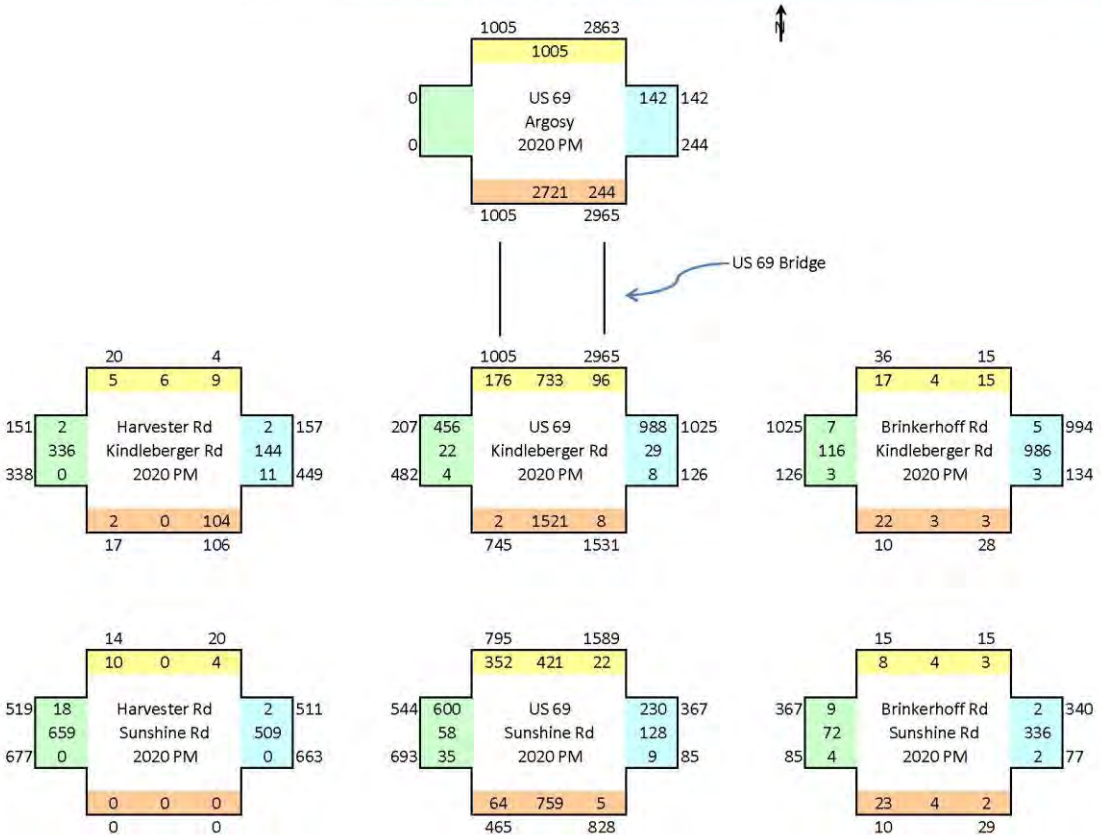

A-5

Made By:	*jai*	*Date:*	*12/5/12*
Checked By:		*Date:*	
WCEA Project Number:	*12-100-509-00*	*Sheet:*	*6 of 6*

Calculations For: *Future 2040 PM Peak Hour Traffic Volume Worksheet*

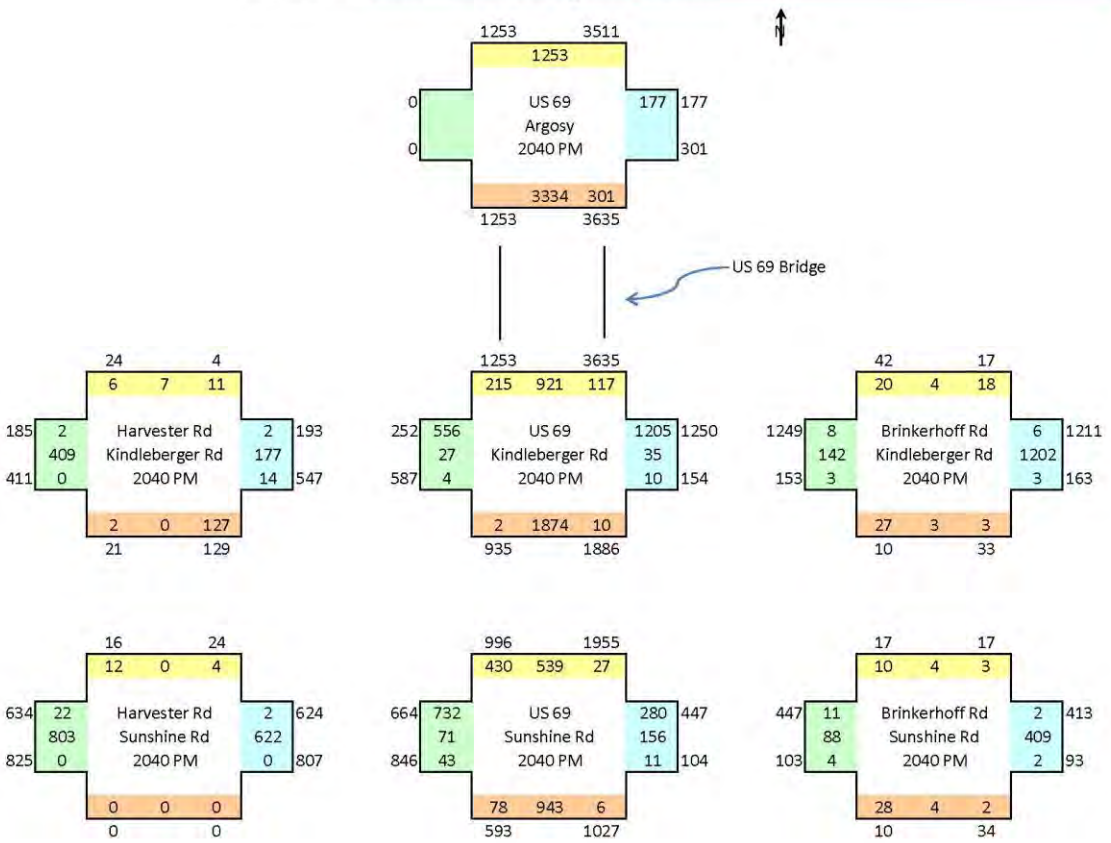

A-6

APPENDIX B – HORIZONS DEVELOPMENT

Proposed Site Plan

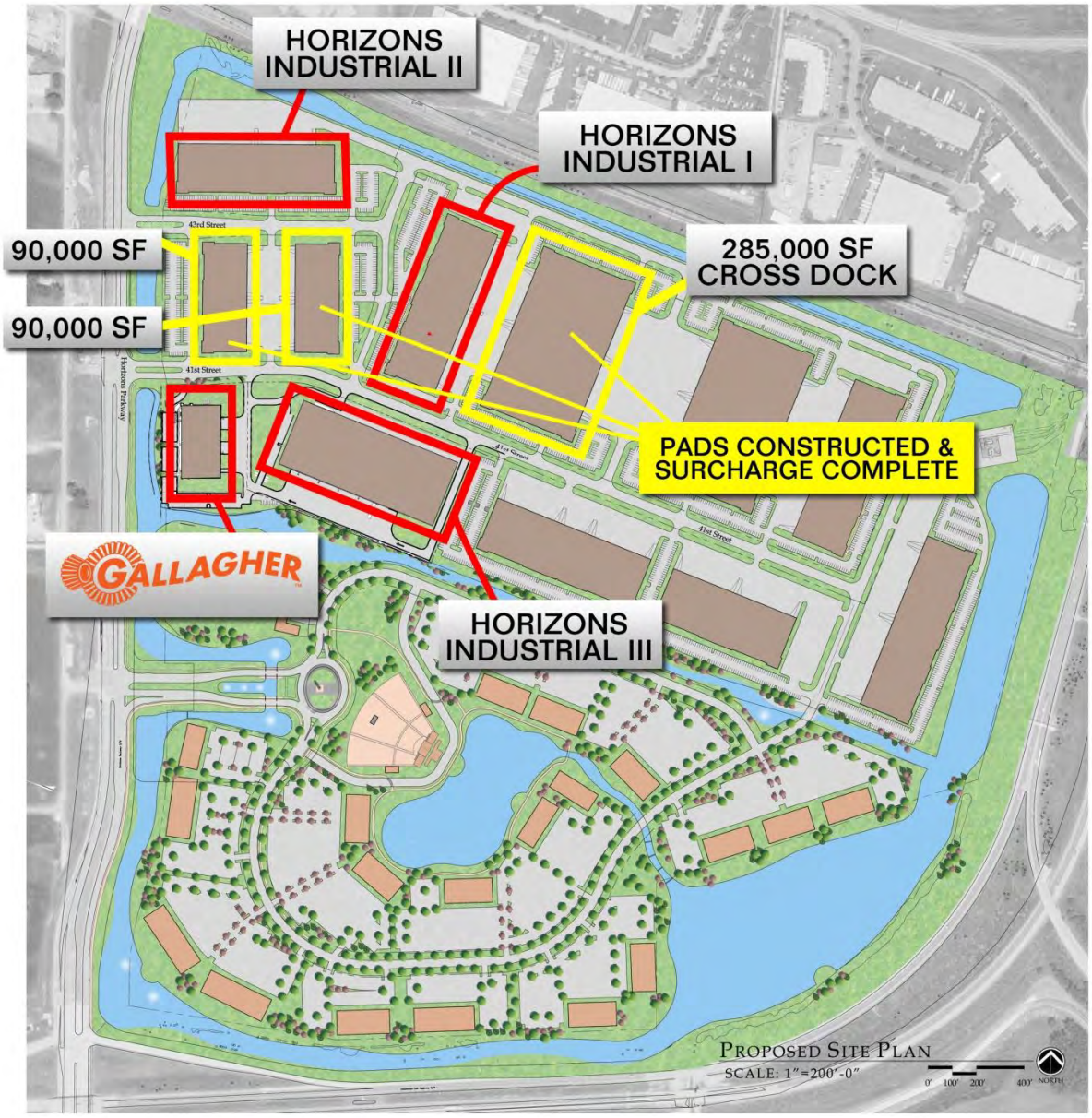

Specific Building Jobs

COMPANY	JOBS	ANNUAL PAYROLL
JOHNSON CONTROLS	402	$16,800,000
PREMIUM WATERS	100	$4,850,000
MARLEN INTERNATIONAL	142	$8,840,000
VELOCITI	100	$7,640,000
GALLAGHER	50	$1,900,000
PFG VISTAR	77	$3,080,000
TOTAL	**871**	**$43,110,000**

APPENDIX C – DIVERTED TRAFFIC WORKSHEETS

Existing 2012 AM Peak Hour Traffic Counts
2012 AM Peak Hour Traffic Volumes
Future 2020 AM Peak Hour Traffic Volume Worksheet
Future 2040 AM Peak Hour Traffic Volume Worksheet
Existing 2012 PM Peak Hour Traffic Counts
2012 PM Peak Hour Traffic Volumes
Future 2020 PM Peak Hour Traffic Volume Worksheet
Future 2040 PM Peak Hour Traffic Volume Worksheet

Made By:	jai	*Date:*	12/5/12
Checked By:		*Date:*	
WCEA Project Number:	12-100-509-00	*Sheet:*	1 of 8

Calculations For: *Existing 2012 AM Peak Hour Traffic Counts*

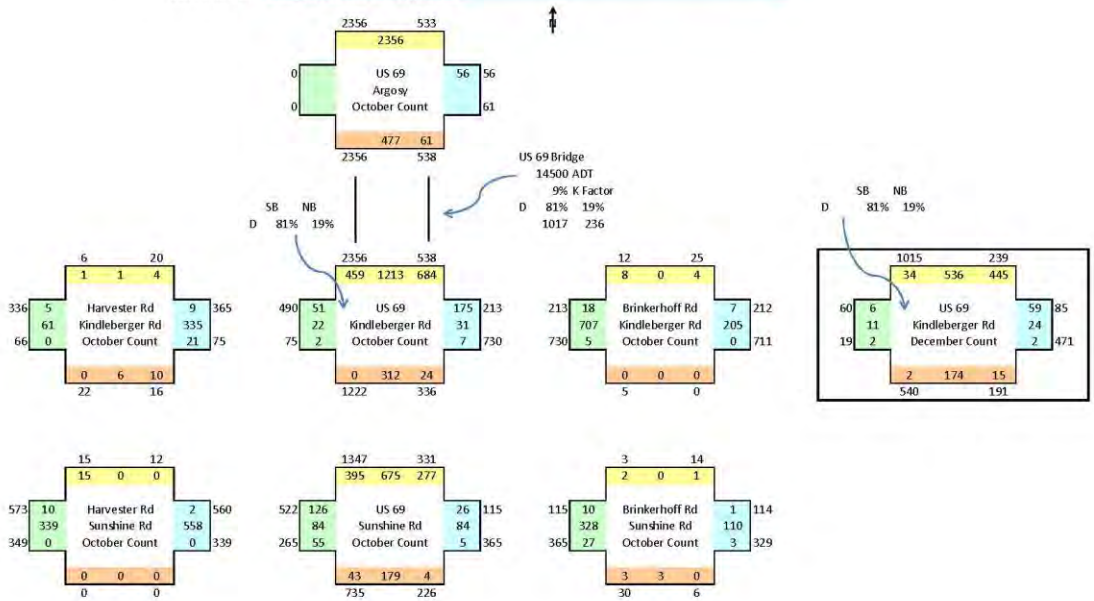

C-1

Made By:	*jai*	*Date:*	*12/5/12*
Checked By:		*Date:*	
WCEA Project Number:	*12-100-509-00*	*Sheet:*	*2 of 8*

Calculations For: *2012 AM Peak Hour Traffic Volumes*

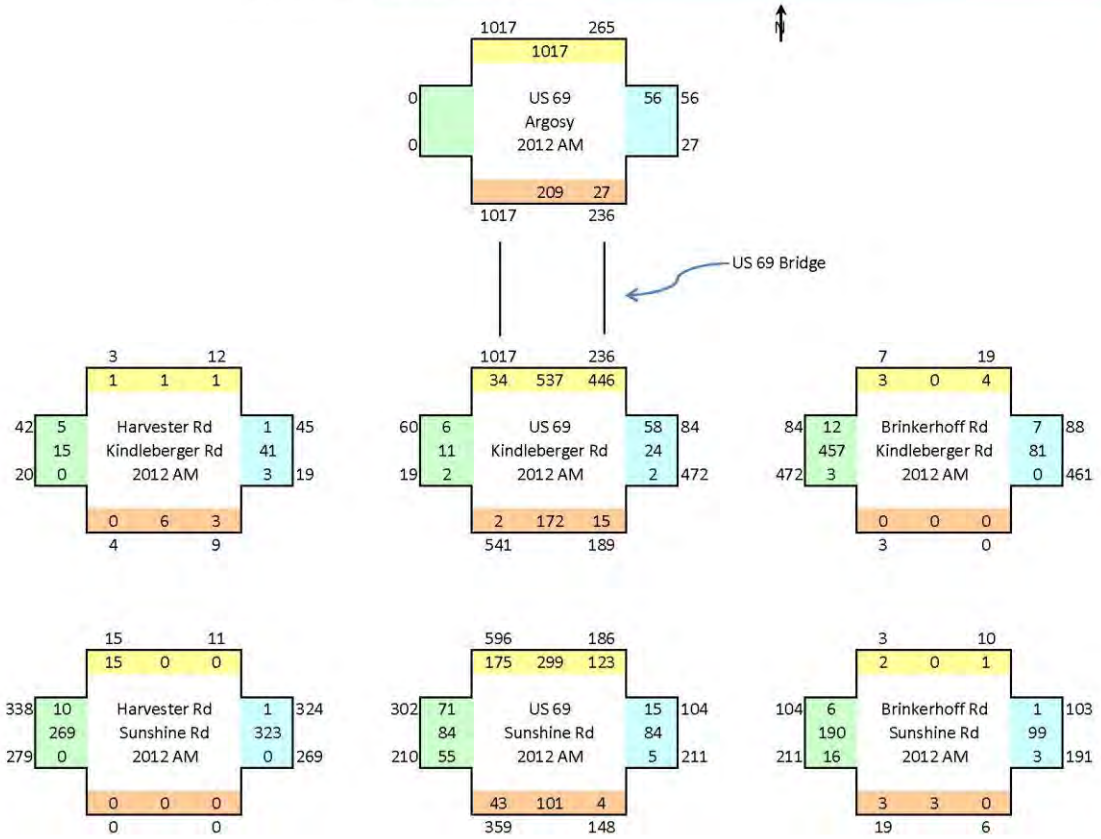

C-2

Made By:	*jai*	*Date:*	*12/5/12*
Checked By:		*Date:*	
WCEA Project Number:	*12-100-509-00*	*Sheet:*	*3 of 8*

Calculations For: *Future 2020 AM Peak Hour Traffic Volume Worksheet*

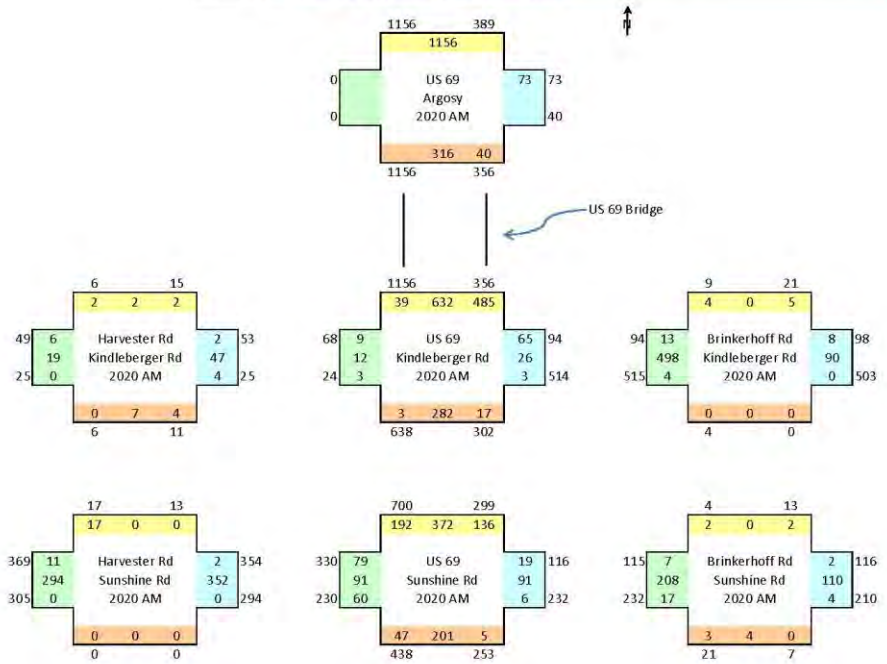

Growth Rate	1%
Years	8
272	
In	1496
Out	778
Percent Bridge	10%
Percent Built	66%
Casino	
In	127
Out	160
Percent Bridge	10%
Percent Built	75%
Distribution	
Kindleberger	
E	2%
W	2%
Sunshine	
E	2%
W	2%
US 69	
S	92%

C-3

Made By:	*jai*	*Date:*	*12/5/12*
Checked By:		*Date:*	
WCEA Project Number:	*12-100-509-00*	*Sheet:*	*4 of 8*

Calculations For: *Future 2040 AM Peak Hour Traffic Volume Worksheet*

Growth Rate	1%
Years	28
272	
In	1496
Out	778
Percent Bridge	10%
Percent Built	100%
Casino	
In	127
Out	160
Percent Bridge	10%
Percent Built	100%
Distribution	
Kindleberger	
E	2%
W	2%
Sunshine	
E	2%
W	2%
US 69	
S	92%

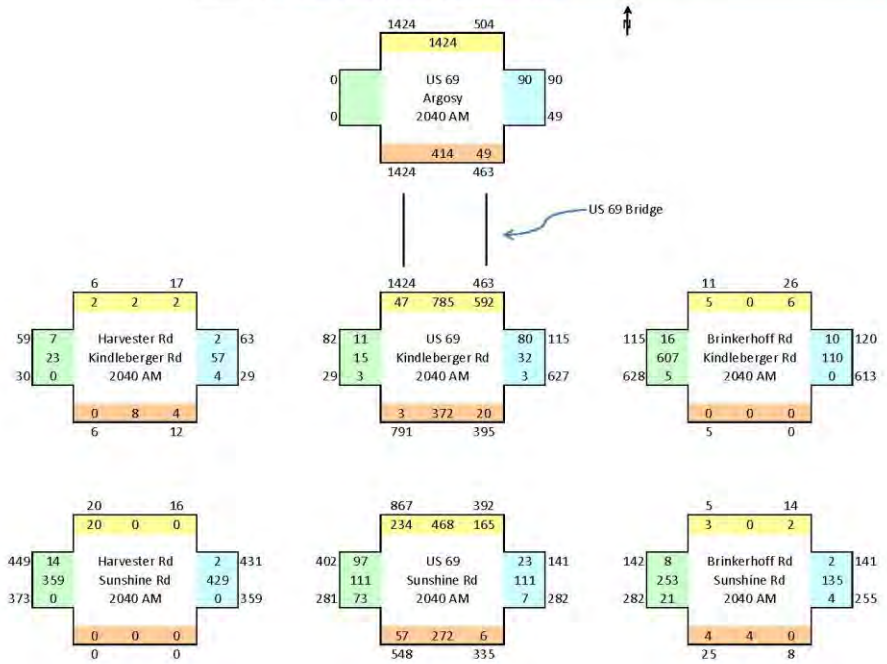

C-4

Made By:	*jai*	*Date:*	*12/5/12*
Checked By:		*Date:*	
WCEA Project Number:	*12-100-509-00*	*Sheet:*	*5 of 8*

Calculations For: *Existing 2012 PM Peak Hour Traffic Counts*

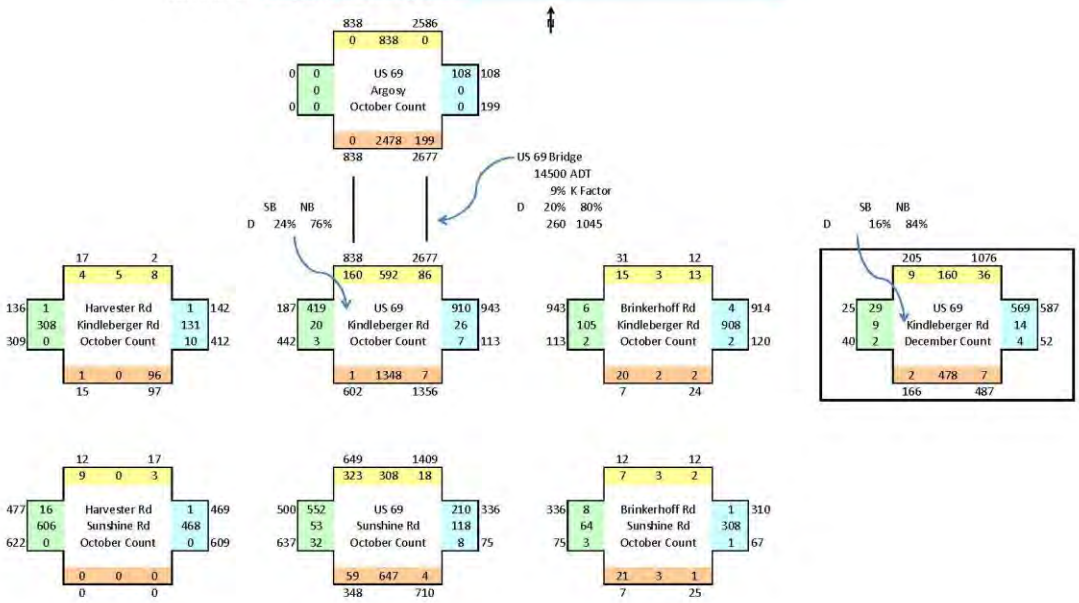

C-5

Made By:	*jai*	*Date:*	*12/5/12*
Checked By:		*Date:*	
WCEA Project Number:	*12-100-509-00*	*Sheet:*	*6 of 8*

Calculations For: *2012 PM Peak Hour Traffic Volumes*

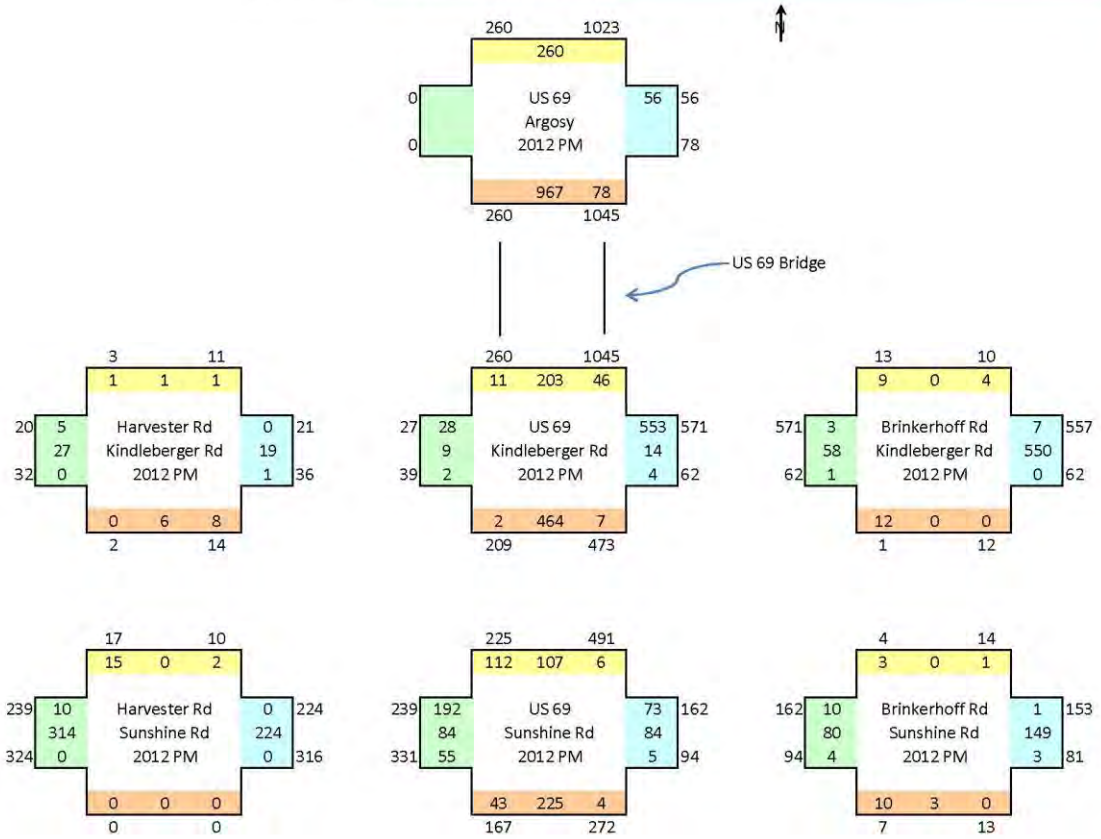

C-6

Made By:	*jai*	*Date:*	*12/5/12*
Checked By:		*Date:*	
WCEA Project Number:	*12-100-509-00*	*Sheet:*	*7 of 8*

Calculations For: *Future 2020 PM Peak Hour Traffic Volume Worksheet*

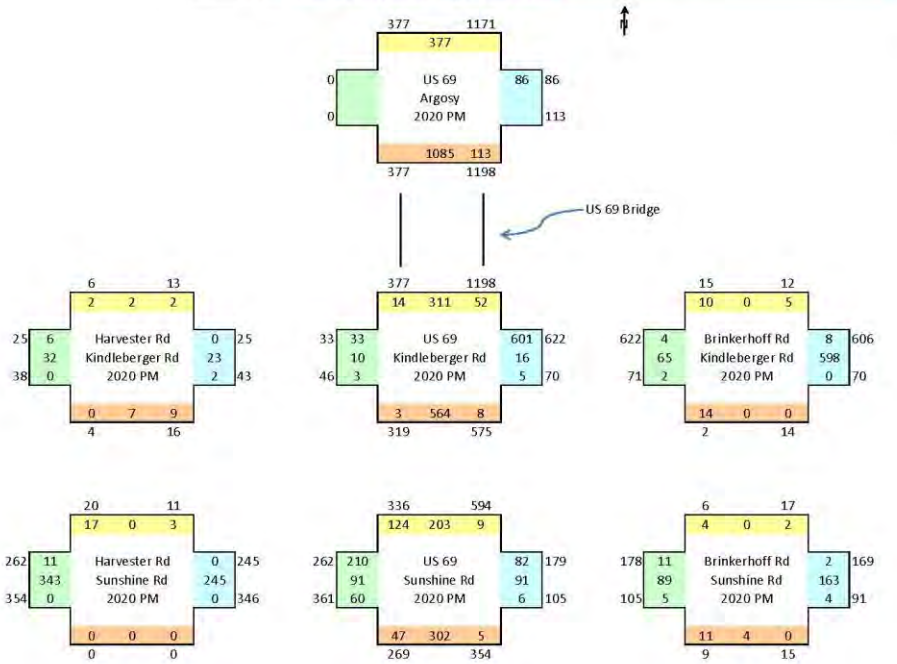

Growth Rate	1%
Years	8
272	
In	949
Out	1431
Percent Bridge	10%
Percent Built	66%
Casino	
In	373
Out	331
Percent Bridge	10%
Percent Built	75%
Distribution	
Kindleberger	
E	2%
W	2%
Sunshine	
E	2%
W	2%
US 69	
S	92%

C-7

Made By:	*jai*	*Date:*	*12/5/12*
Checked By:		*Date:*	
WCEA Project Number:	*12-100-509-00*	*Sheet:*	*8 of 8*

Calculations For: *Future 2040 PM Peak HOUr Traffic Volume Worksheet*

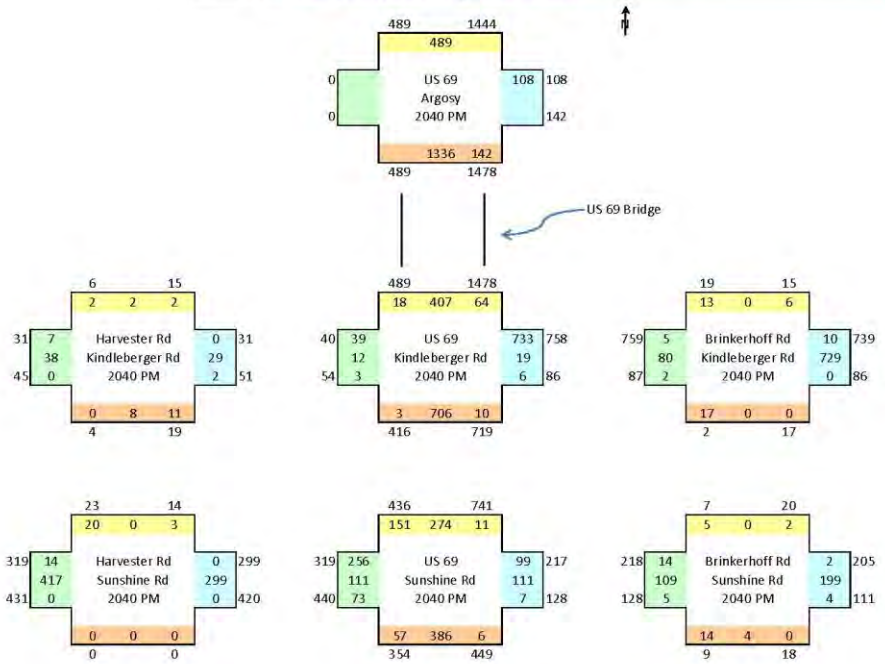

Growth Rate	1%
Years	28
272	
In	949
Out	1431
Percent Bridge	10%
Percent Built	100%
Casino	
In	373
Out	331
Percent Bridge	10%
Percent Built	100%
Distribution	
Kindleberger	
E	2%
W	2%
Sunshine	
E	2%
W	2%
US 69	
S	92%

C-8

APPENDIX D – FUTURE TRAFFIC PROJECTIONS

Existing 2012 AM Peak Hour Traffic Volume
Future 2014 AM Peak Hour Traffic Volume
Future 2017 AM Peak Hour Traffic Volume
Future 2020 AM Peak Hour Traffic Volume
Future 2040 AM Peak Hour Traffic Volume
Existing 2012 PM Peak Hour Traffic Volume
Future 2014 PM Peak Hour Traffic Volume
Future 2017 PM Peak Hour Traffic Volume
Future 2020 PM Peak Hour Traffic Volume
Future 2040 PM Peak Hour Traffic Volume

Made By:	*jai*	*Date:*	*12/5/12*
Checked By:		*Date:*	
WCEA Project Number:	*12-100-509-00*	*Sheet:*	*1 of 10*

Calculations For: *Future 2012 AM Peak Hour Traffic Volume*

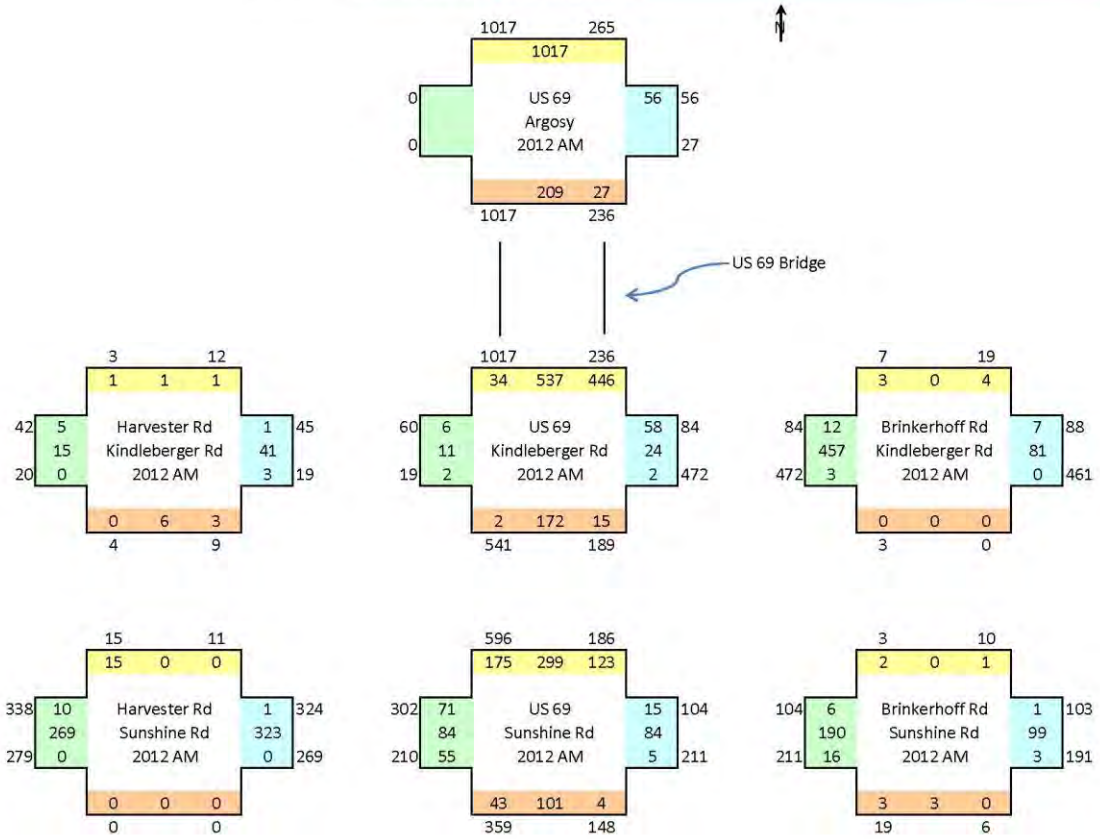

D-1

Made By:	*jai*	*Date:*	*12/5/12*
Checked By:		*Date:*	
WCEA Project Number:	*12-100-509-00*	*Sheet:*	*2 of 10*

Calculations For: *Future 2014 AM Peak Hour Traffic Volume*

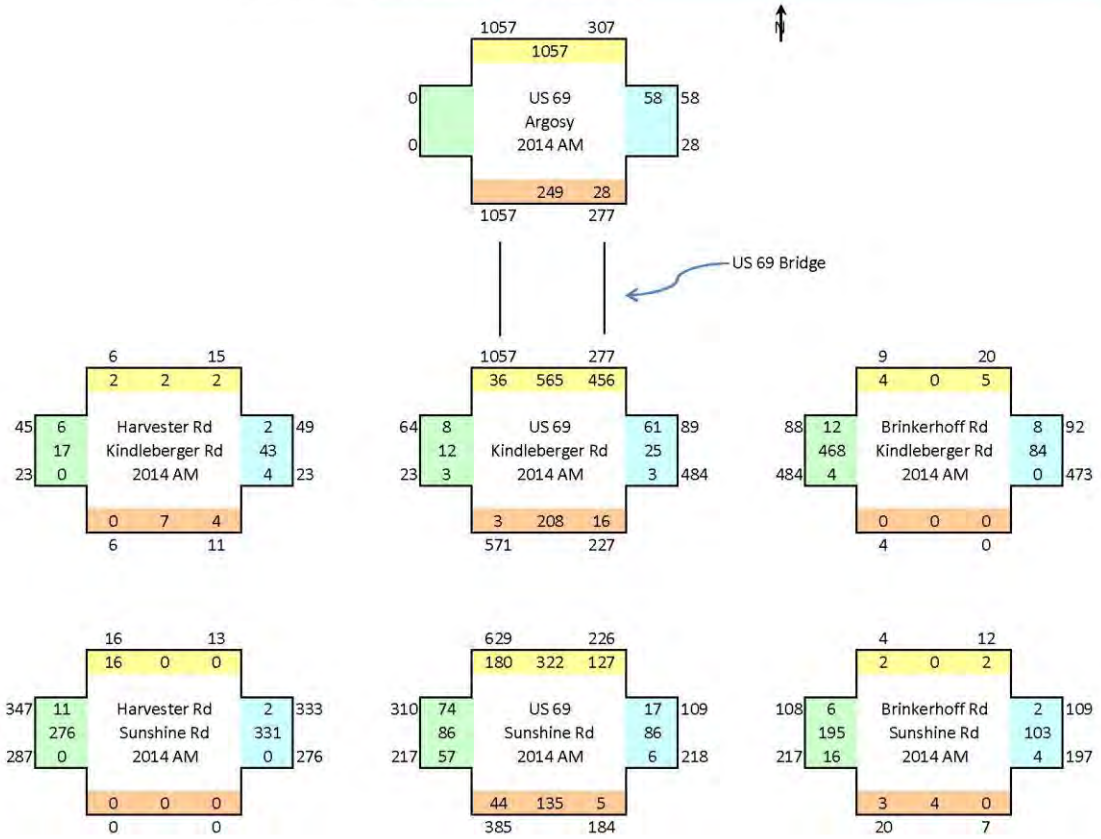

D-2

Made By:	*jai*	*Date:*	*12/5/12*
Checked By:		*Date:*	
WCEA Project Number:	*12-100-509-00*	*Sheet:*	*3 of 10*

Calculations For: *Future 2017 AM Peak Hour Traffic Volume*

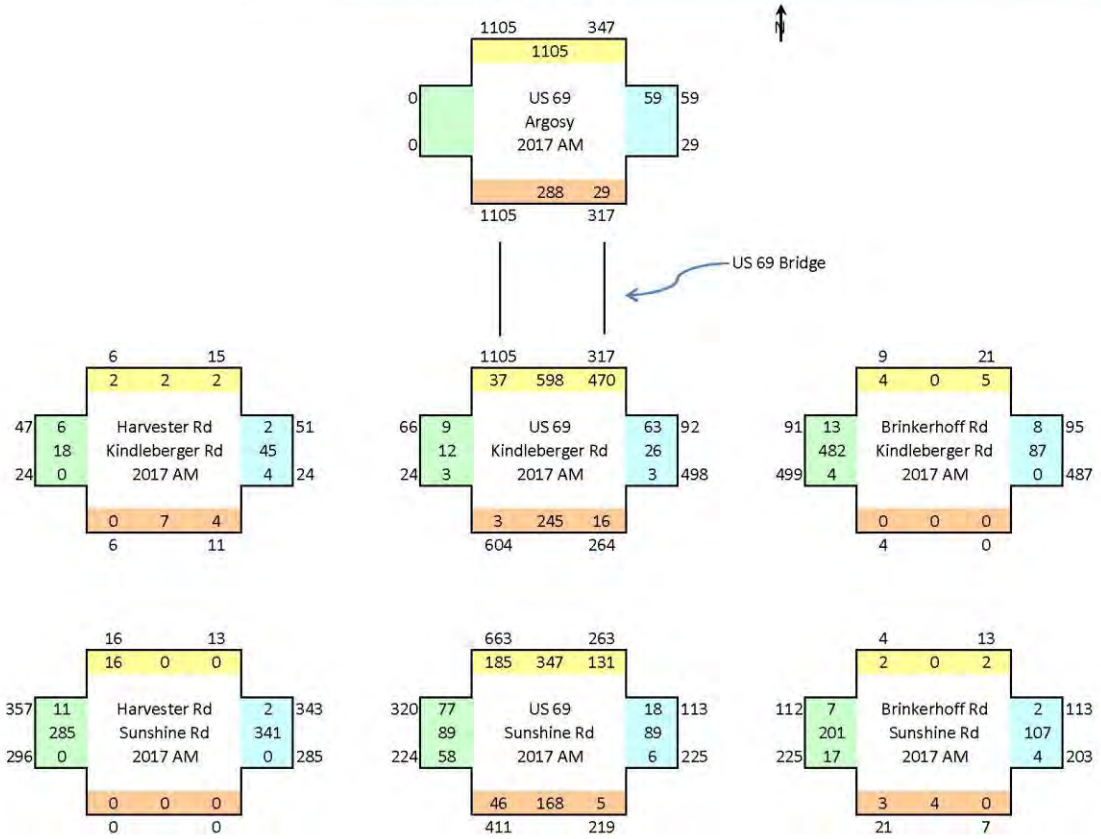

D-3

Made By:	*jai*	*Date:*	*12/5/12*
Checked By:		*Date:*	
WCEA Project Number:	*12-100-509-00*	*Sheet:*	*4 of 10*

Calculations For: *Future 2020 AM Peak Hour Traffic Volume*

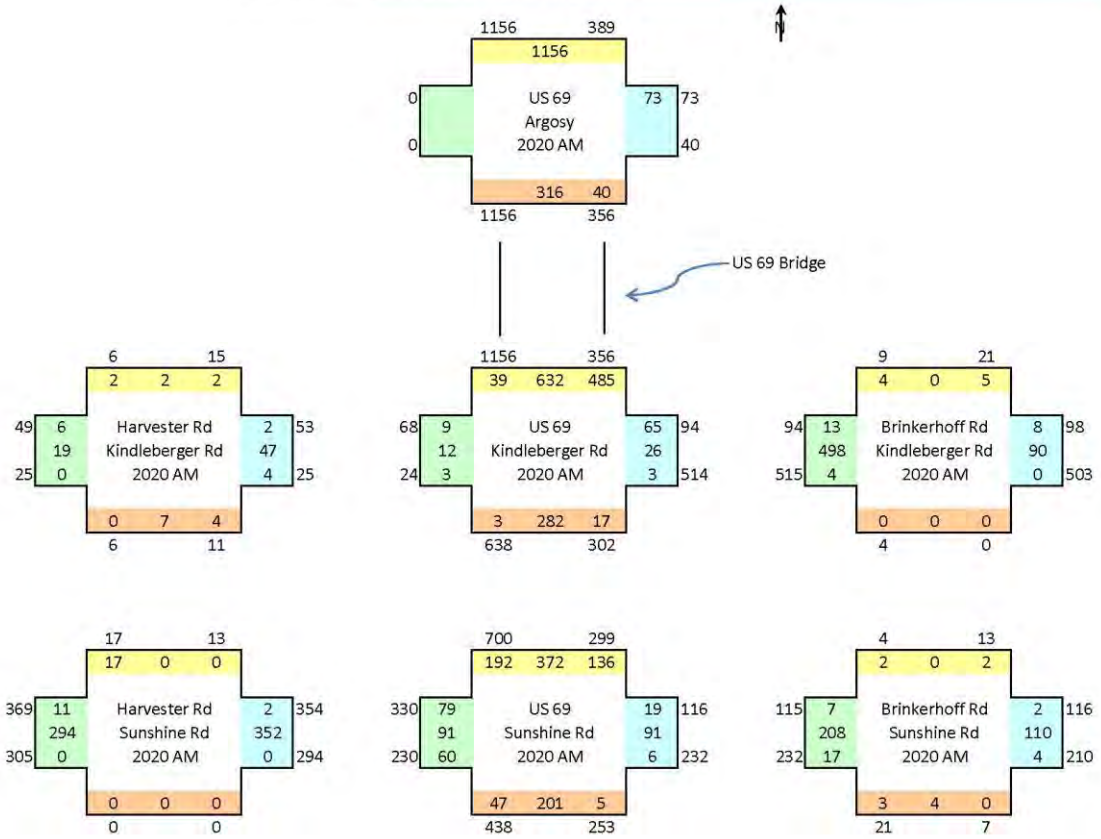

D-4

Made By:	*jai*	*Date:*	*12/5/12*
Checked By:		*Date:*	
WCEA Project Number:	*12-100-509-00*	*Sheet:*	*5 of 10*

Calculations For: *Future 2040 AM Peak Hour Traffic Volume*

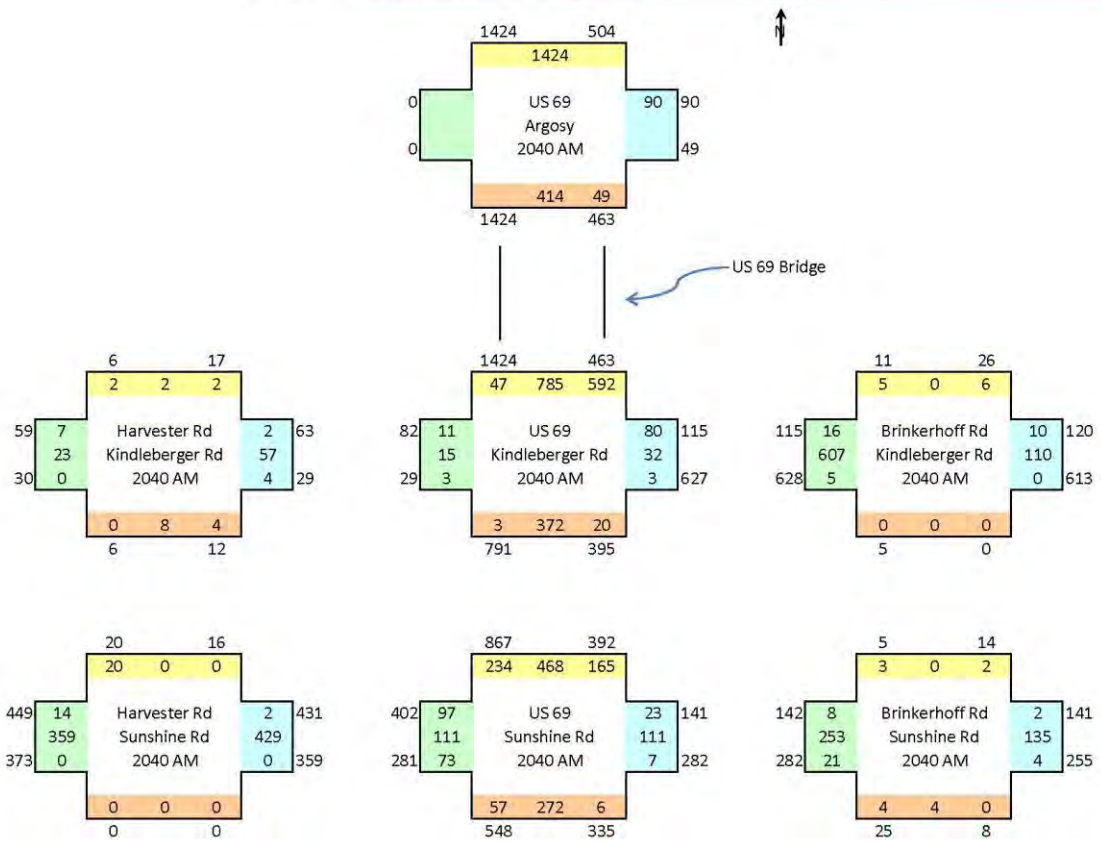

D-5

Made By:	*jai*	*Date:*	*12/5/12*
Checked By:		*Date:*	
WCEA Project Number:	*12-100-509-00*	*Sheet:*	*6 of 10*

Calculations For: *Future 2012 PM Peak Hour Traffic Volume*

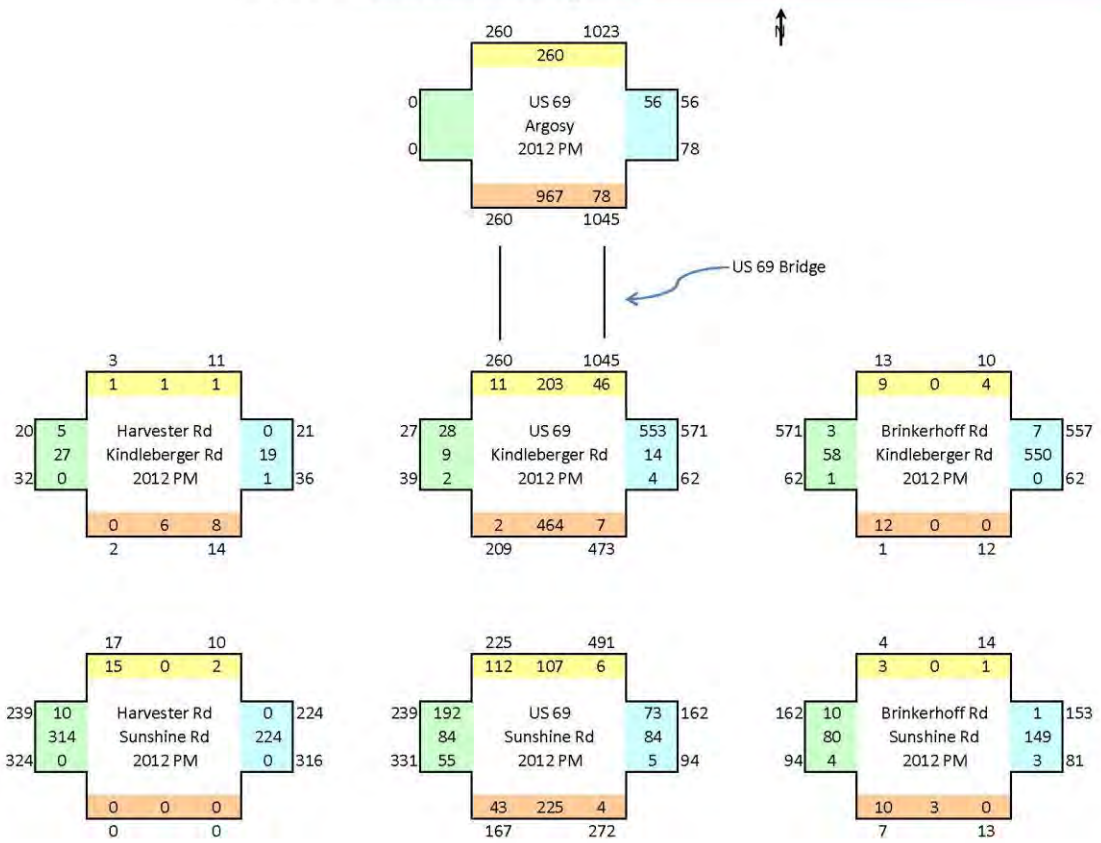

D-6

Made By:	*jai*	*Date:*	*12/5/12*
Checked By:		*Date:*	
WCEA Project Number:	*12-100-509-00*	*Sheet:*	*7 of 10*

Calculations For: *Future 2014 PM Peak Hour Traffic Volume*

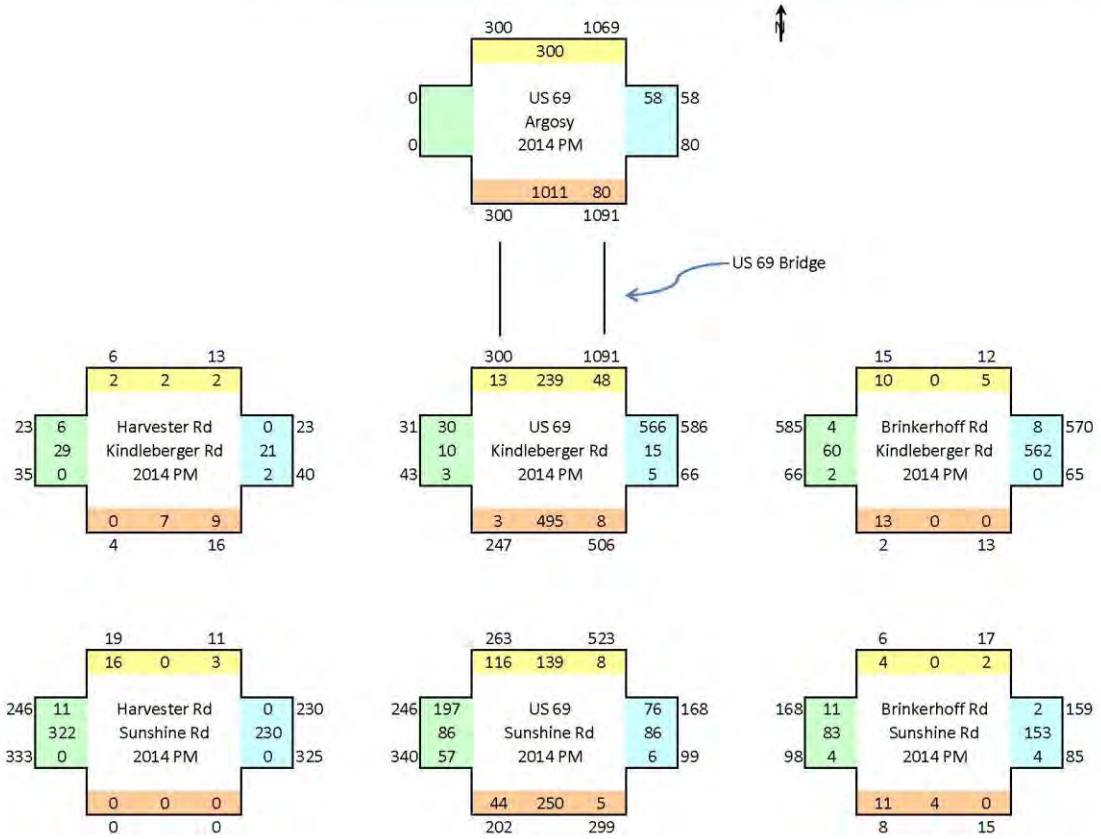

D-7

Made By:	*jai*	*Date:*	*12/5/12*
Checked By:		*Date:*	
WCEA Project Number:	*12-100-509-00*	*Sheet:*	*8 of 10*

Calculations For: *Future 2017 PM Peak Hour Traffic Volume*

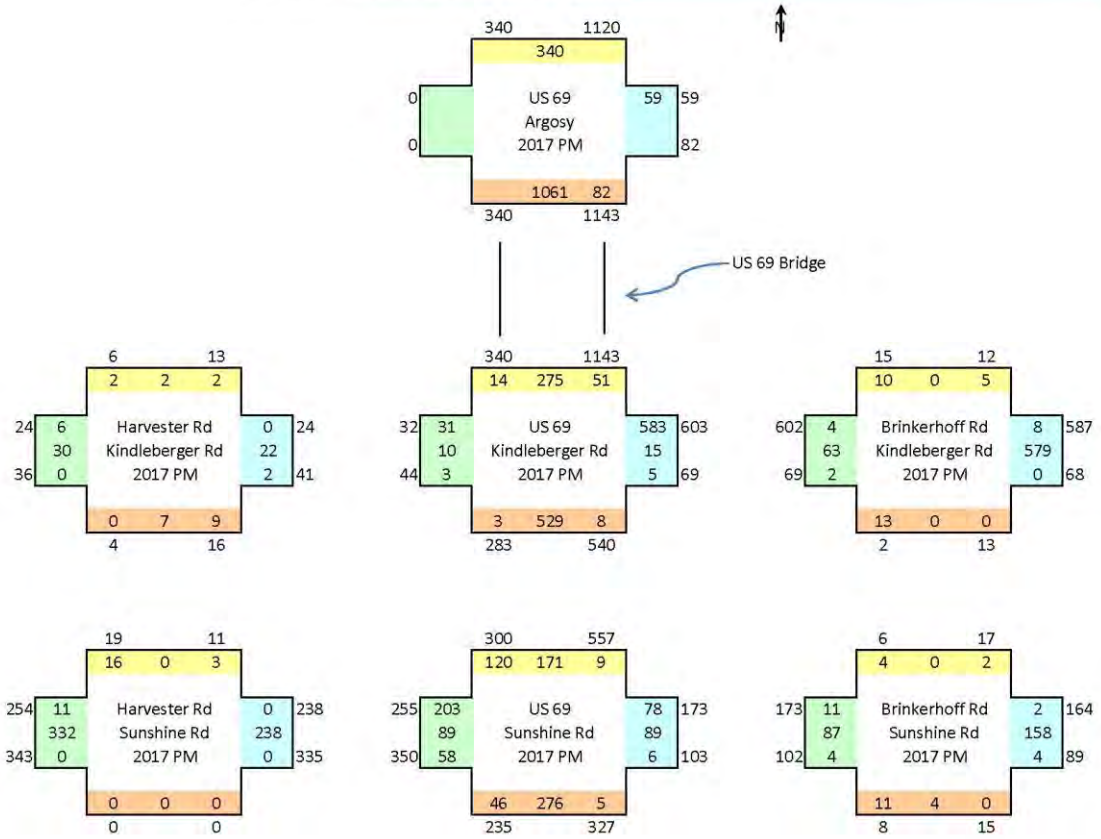

D-8

Made By:	*jai*	*Date:*	*12/5/12*
Checked By:		*Date:*	
WCEA Project Number:	*12-100-509-00*	*Sheet:*	*9 of 10*

Calculations For: *Future 2020 PM Peak Hour Traffic Volume*

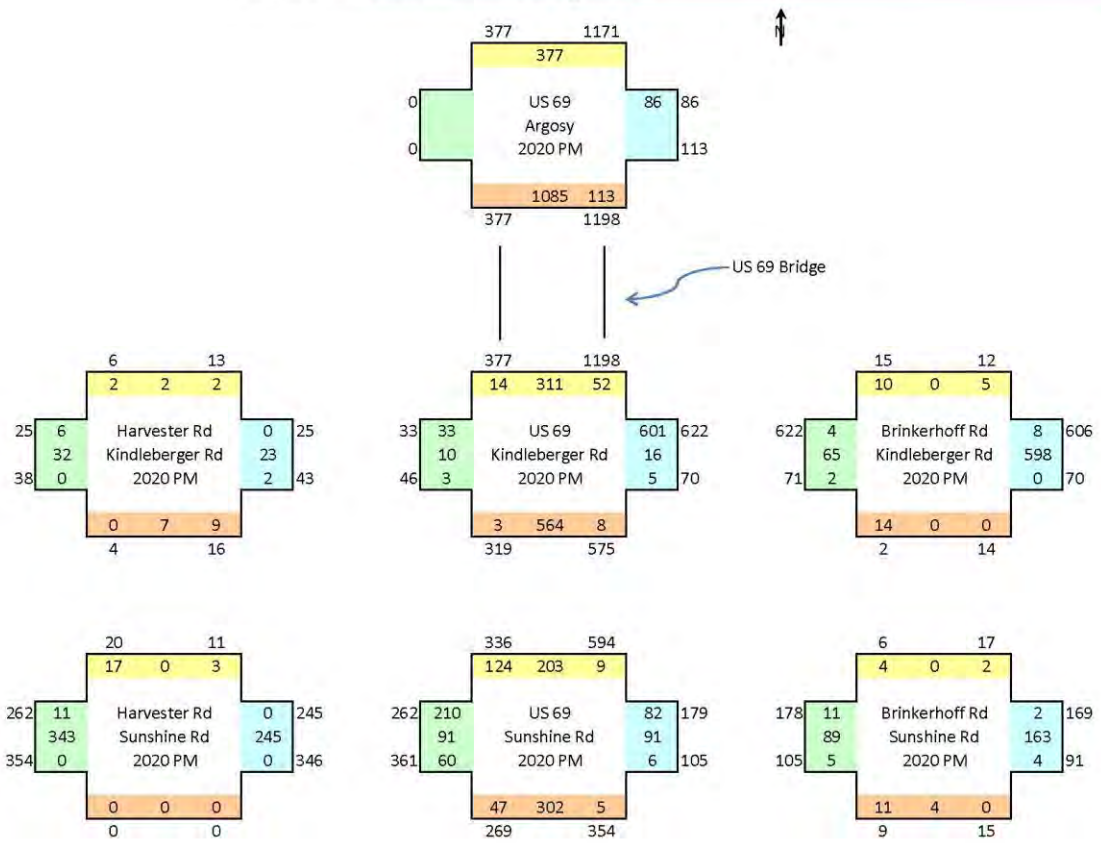

D-9

Made By:	*jai*	*Date:*	*12/5/12*
Checked By:		*Date:*	
WCEA Project Number:	*12-100-509-00*	*Sheet:*	*10 of 10*

Calculations For: *Future 2040 PM Peak Hour Traffic Volume*

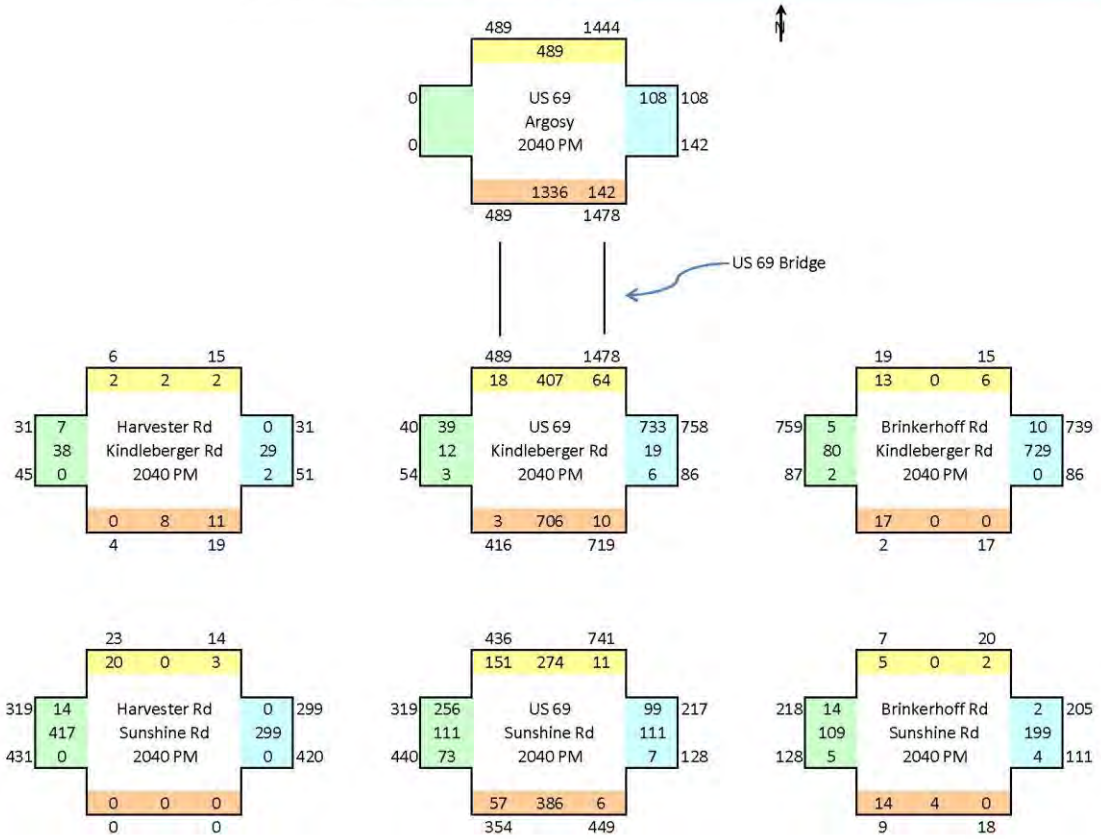

D-10

APPENDIX A-3
Bridge Study Memorandum

Missouri Department of Transportation
Kansas City District
600 Northeast Colbern Road
Lee's Summit, Missouri 64086

APPENDIX A-3

BRIDGE STUDY MEMORANDUM

Date: April 12, 2013

Subject: Bridge Study Memorandum

From: U.S. 69 Bridges over the Missouri River EA Study Team

TABLE OF CONTENTS

1. Introduction

2. Existing Structures
   2.1. Fairfax Bridge – Bridge K0456
      2.1.1. Description
      2.1.2. Current Condition & Rating
      2.1.3. Remaining Service Life
   2.2. Platte Purchase Bridge – Bridge A0450
      2.2.1. Description
      2.2.2. Current Condition & Rating
      2.2.3. Remaining Service Life
   2.3. Utility Attachments

3. River Conditions
   3.1. Navigation Requirements
   3.2. Levee Systems
      3.2.1. Fairfax Levee
      3.2.2. Riverside-Quindaro Bend Levee
   3.3. Hydraulics

4. Subsurface Information

5. Structure Type Studies
   5.1. Navigation Unit
   5.2. Fairfax Approach
   5.3. Riverside Approach

6. Construction Cost Estimates

1. Introduction

This appendix section summarizes the Missouri River bridge studies relating to the Environmental Assessment (EA) for the Missouri Department of Transportation (MoDOT). The crossing connects the Fairfax Industrial District in Kansas City, Kansas on the south to the city of Riverside, Missouri on the north. A new four-lane structure with a shared use path has been recommended in the EA to replace the existing U.S. 69 Missouri River Bridges.

The current crossing currently consists of two separate bridges. The Fairfax Bridge, constructed in 1935, carries the two southbound lanes of U.S. 69. The Platte Purchase Bridge, constructed in 1957, carries the two northbound lanes. The conditions of both existing bridges are discussed in detail in this appendix.

The location of the existing abutments and the features spanned are the same for both bridges. The south approach roadway embankment and abutment are situated on the Missouri River floodplain behind the U.S. Army Corps of Engineers (USACE) Kansas side levee. From the south abutment the bridge crosses over multiple tracks of the Union Pacific Railroad, then the Kansas side levee, the river channel, the Missouri side overbank, the USACE Missouri side levee and the access road to Argosy Parkway. The north approach roadway and abutment are located on the Missouri River floodplain behind the Missouri side levee.

The structure and cost studies summarized in this report are applicable to the alignments identified in the EA as Build Option 3A and Build Option 3B (1 & 2). Option 3A is on an alignment immediately west (upstream) of the existing bridges. The alignment for Option 3B is on an alignment within the footprint of the existing bridges and its overall length is roughly the same as Option 3A. The locations of the proposed bridge abutments for both alignments are assumed to be at or near the existing abutments. Additional alignments downstream of the existing bridges, utilization of the 1957 bridge and two lane options are discussed in the EA document but were not considered to be feasible for recommendation.

2. Existing Structures

The existing bridge information was obtained from existing bridge plans and the most recent Structural Inventory & Appraisal Sheets, with general inspection date May 2011 for the Fairfax Bridge and August 2011 for the Platte Purchase Bridge.

2.1. Fairfax Bridge – Bridge K0456

2.1.1. Description

The existing Fairfax Bridge, U.S. 69 Southbound, was constructed in 1935. It has fifteen spans and an overall length, from abutment to abutment, of 2,596 ft. The main river spans are a cantilevered truss unit with spans of 415-474-415 ft. The main river spans are flanked on each side by single 300 ft. through truss spans. Shorter beam and deck truss spans make up the remaining portions of the north and south approaches to the main river spans. The four river piers are founded on rock and utilized caisson construction. Approach piers are founded on timber pile.

2.1.2. Current Condition & Rating

According to the February 2012 Structural Inventory & Appraisal Sheet (SI&A) for the Fairfax Bridge, the operating (capacity) rating is 39 tons and the inventory (service) rating is 25 tons. Rating was by allowable stress method.
The 20'-0" curb to curb roadway width is a major limiting component of the structure. Because the existing superstructure is a through truss type, the deck cannot practically be widened. The condition and appraisal codes on the standard inventory form are based on a scale from 0 (failed) to 9 (excellent). The condition of the superstructure is specified as a 4 ("poor condition") which defines the Fairfax Bridge as "Structurally Deficient". The deck geometry, specified as a 2 ("basically intolerable requiring high priority for replacement"), would define the structure as "Functionally Obsolete" if it wasn't already defined as "Structurally Deficient". The deck width cannot be improved without complete superstructure replacement or significant modification. Preliminary investigations indicate the existing river piers cannot resist current AASHTO barge impact loads. The through truss has a vertical clearance of 16'-2". The vertical clearance for a through truss superstructure required by current AASHTO standards is 17'-6".

The sufficiency rating of the existing Fairfax Bridge has been determined to be 39.9 on the National Bridge Inventory scale of 100, with 0 being entirely deficient and 100 being entirely sufficient. A bridge is typically eligible for replacement if it has a sufficiency rating below 50. This rating is based on three basic categories: structural adequacy and safety, serviceability and functional obsolescence, and essentiality for public use. The existing Fairfax Bridge is largely deficient in two of these categories. Specific reductions from a rating of 100 can be extracted from the 2011 appraisal:

Structure Condition General evaluation	- 25.0
Inventory Rating Safe live load capacity	- 10.1
Structure Constraints Deck width and geometry	- 24.0
Essentiality ADT vs. detour length	- 1.0
TOTAL REDUCTION OF	- 60.1 = RATING OF 39.9

This sufficiency rating can be improved, but most likely by small increments only. The superstructure and supporting substructure elements are still nearly 80 years old. The structure width constraints cannot be improved in any practical manner, because the through truss configuration precludes any deck widening.

It is possible to widen to the outside of a through truss with structural brackets; this is occasionally done to add pedestrian walkways to a truss structure. However, there is a corresponding increase in weight due to the steel brackets and pedestrian load on the brackets. Both the Fairfax and Platte Purchase Bridges currently have a reduced load capacity, and widening the superstructure in this way would further reduce the load carrying capacity.

2.1.3. Remaining Service Life

As these types of through-truss bridges age, there is generally an increase in long-term maintenance and repairs, particularly due to steel deterioration. Because of the advanced age of the Fairfax Bridge, it is nearing the end of its useful service life. Repairs will be frequent and costly in order to keep this structure in use. Due to the sensitive nature of fracture critical bridges like this one, unexpected and costly repairs outside of routine maintenance are more likely to occur as the bridge ages. These emergency repairs could close the structure to traffic for days or even weeks while a structural solution is investigated and completed. In addition to the cost to taxpayers, the frequency and duration of inspections and closures for repairs inconvenience the travelling public including shippers and employees in Riverside and the Fairfax Industrial District.

In addition, due to the condition and age of the bridge, it is not considered practical for repurposing, such as for dedicated pedestrian or bicyclist access. A major issue for alternate use, once the structure is removed from the highway system, is that the new bridge owner must assume all liability and responsibility for the structure. This includes the safety of any users and the safety of the structure itself, as well as the maintenance of operable navigation lighting per Coast Guard requirements. Routine structural inspections by qualified inspectors would also be necessary.

2.2. Platte Purchase Bridge – Bridge A0450

2.2.1. Description

The existing Platte Purchase Bridge, U.S. 69 Northbound, was constructed in 1957. It has fifteen spans and an overall length, from abutment to abutment, of 2,602 ft. The main river spans are a cantilevered truss unit with spans of 415-474-415 ft. The main river spans are flanked on each side by single 300 ft. through truss spans. Shorter beam spans make up the remaining portion of the north and south approaches to the main river spans. The four river piers are founded on rock and utilized caisson construction. Approach piers are founded on timber pile.

2.2.2. Current Condition & Rating

According to the February 2012 Structural Inventory & Appraisal Sheet (SI&A) for the Platte Purchase Bridge, the operating (capacity) rating is 31 tons and the inventory (service) rating is 18 tons. Rating method was load factor.

The 25’-10” curb to curb roadway width is a major limiting component of the structure. The condition and appraisal codes on the standard inventory form are based on a scale from 0 (failed) to 9 (excellent). The deck geometry, specified as a 2, (“basically intolerable requiring high priority for replacement”) defines the structure as “Functionally Obsolete”. The width cannot be improved without complete superstructure replacement or significant modification. Preliminary investigations indicate the existing river piers cannot resist current AASHTO barge impact loads. The through truss has a vertical clearance of 15’-5”. The vertical clearance for a through truss superstructure required by current standards is 17’-6”.

The sufficiency rating of the existing bridge has been determined to be 44.9 on the National Bridge Inventory scale of 100, with 0 being entirely deficient and 100 being

entirely sufficient. A bridge is typically eligible for replacement if it has a sufficiency rating below 50. This rating is based on three basic categories: structural adequacy and safety, serviceability and functional obsolescence, and essentiality for public use. The existing Platte Purchase Bridge is largely deficient in two of these categories. Specific reductions from a rating of 100 can be extracted from the 2011 appraisal:

Structure Condition General evaluation	- 10.0
Inventory Rating Safe live load capacity	- 21.2
Structure Constraints Deck width and geometry	- 23.0
Essentiality ADT vs. detour length	- 0.9
TOTAL REDUCTION OF	- 55.1 = RATING OF 44.9

This sufficiency rating can be improved, but most likely by small increments only. The superstructure and supporting substructure elements are still nearing 60 years old. The existing substructure cannot resist current barge impact loads. The bridge is functionally obsolete. The structure constraints cannot be improved in any practical manner. The through truss configuration precludes any deck widening.

2.2.3. Remaining Service Life

Similar to the Fairfax Bridge, as these types of through-truss bridges age, there is generally an increase in long-term maintenance and repairs, particularly due to steel deterioration. If the Platte Purchase Bridge were to remain in service, the structure would continue to be considered functionally obsolete due to its narrow roadway width, vertical clearance limitations and weight restrictions.

In addition, both the superstructure and substructure of the Platte Purchase Bridge currently have a condition rating of 5 ("fair condition"). A condition rating of 4 qualifies a structure as structurally deficient, similar to that of the older Fairfax Bridge. Because the Platte Purchase Bridge is classified as functionally obsolete and nearing classification as structurally deficient, on-going maintenance and major repairs would need to be programmed to maintain the bridge for traffic.

A major rehabilitation was performed on this structure in 1997, at a cost of $8 million (FY2013), which included deck replacement, structural repairs and recoating of truss steel. In addition, MoDOT has spent nearly $200,000 since 2003 on the bridge for maintenance, various repairs and scheduled inspections.

MoDOT has estimated that there will need to be a major rehabilitation of the Platte Purchase Bridge within the next five to seven years. The anticipated scope of this work includes deck repairs, structural repairs including bearing replacements and significant gusset plate repairs, sandblasting and recoating steel, major substructure repairs and the replacement of expansion joints. In addition, a deck overlay should also be considered to extend the life of the structure. However, the additional weight of an overlay would further reduce the live load capacity of the structure.

After this projected rehabilitation project, estimated at $14-16 million (FY2013), MoDOT predicts that the life of the Platte Purchase Bridge can be extended an additional twelve years. There is significant pack rust worked into many of the joints and between the plates of the built-up truss members, as well as severe deterioration of several substructure elements. In addition, due to the sensitive nature of fracture critical bridges such as this one, unexpected and costly repairs outside of routine maintenance and projected rehabilitations are more likely to occur as the structure ages. These emergency repairs can close the structure to traffic for days or even weeks while a structural solution is investigated and performed. Rehabilitation and repairs can patch or slow the progression of these structural issues, but MoDOT anticipates that the bridge will likely need to be closed to traffic permanently and replaced by 2032. The estimated cost of a new two-lane sister bridge constructed in 2032 would be $38 Million (2013 dollars).

The following table summarizes the cost of the major rehabilitation projects and potential replacement of the Platte Purchase Bridge:

Year	Age of Platte Purchase Bridge	Major Rehabilitation or Replacement (Cost FY2013)
1957	New	New
1997	40 years	Structural repairs, recoating, deck replacement ($8M)
2013	**56 years**	
2020	63 years	Structural repairs, recoating, deck repair/overlay ($14-16M)
2032	75 years	Replacement with twin bridge ($38M)

Due to the rehabilitation cost estimate versus the anticipated additional number of years of service life for the Platte Purchase Bridge, MoDOT recommended that the best value for this project would be to pursue four lanes on a new bridge instead of rehabilitating and eventually replacing the existing structure. For these reasons, MoDOT did not see maintaining the Platte Purchase Bridge in place as a viable and reasonable expenditure of public money and has eliminated it from further consideration.

2.3. Utility Attachments

There are several utilities currently attached to the existing bridges. These utilities include two high pressure natural gas lines (12” and 16” diameter) and three liquid petroleum lines (two 12” and one 6” diameter). There are communication conduit attachments as well.

These utilities will be displaced when the existing bridges are removed. Options include attachment to the new structure or off-bridge relocation. For attachment to the new bridge, bridge details must be closely coordinated between the utility and the bridge designer. For relocation off the bridge, these utility companies need substantial calendar time to make arrangements; boring beneath the river channel is a costly alternative.

However, boring beneath the levees will not likely be allowed; it is possible that the utilities will need to come up and over the levees, possibly by partial attachment to the replacement bridge. It is critical to communicate immediately and continuously with the many utilities requiring relocation.

3. River Conditions

3.1. Navigation Requirements

Navigation clearance and requirements are under the jurisdiction of the United States Coast Guard (USCG), Eighth District, in St. Louis, Missouri. Discussion and correspondence has occurred with the USCG regarding the replacement of the U.S. 69 bridges. The USCG refers to the bridges as the "Fairfax Dual Bridge" at River Mile 372.6.

Regarding the horizontal and vertical clearances in the navigation span, the USCG states in their letter dated November 5, 2012: "The existing Fairfax Dual Bridge has a low steel elevation of 795.1 Mean Sea Level with a horizontal clearance of 406.0 feet. A replacement bridge at this location would require the low steel elevation and horizontal clearance to meet or exceed the existing bridge to safely meet the reasonable needs of navigation".

A construction permit will be required from the USCG for this bridge replacement. Early in design, once the pier locations and bridge profile are finalized, a formal construction permit application must be submitted to the USCG. A preliminary permit drawing showing proposed low steel and the location of the navigation span piers for Option 3A has been submitted to the USCG. The USCG has given conditional acceptance of the information on the preliminary permit drawing. The clearances for Option 3B exceed the USCG requirements. Issuance of a USCG Construction Permit is subject to their review and approval of the finalized low steel profile and pier locations.

The normal navigation season extends for a period of eight months from April to November. During this time, a minimum discharge is released from upstream reservoirs to maintain the river surface at an elevation to facilitate navigation. River flows are reduced during winter months to minimize ice damage and refill upstream reservoirs.

3.2. Levee Systems

This project is flanked by two levee systems managed by independent levee districts, with oversight provided by the USACE. Bridge construction methods will be closely reviewed by these agencies prior to the start of work. Additional requirements during construction may include levee stability and seepage analysis, site monitoring during construction, contingency flood condition measures and special backfill measures.

3.2.1. Fairfax Levee

The USACE name for the levee is the Fairfax-Jersey Creek Levee Unit. The levee is located on the Kansas (south) side of the Missouri River. It extends from the Union Pacific Railroad Bridge, River Mile (RM) 367.5 downstream to the mouth of the Kansas River, RM 373.9. The U.S. 69 crossing is at RM 372.6. The USACE description of the unit is: "The flood protection facilities consist of levees, floodwalls, stoplog and

sandbag gaps, riprap and levee toe protection, surfaced levee crown and ramps, drainage structures, pressure relief wells and levee drainage system, and the Jersey Creek sewer structure, shutter gate and pumping plants". A levee drainage system runs along the landward toe in the vicinity of the bridge.

3.2.2. Riverside-Quindaro Bend Levee

The Riverside-Quindaro Bend Levee is on the Missouri (north) side of the river. The levee system extends up and downstream of the U.S. 69 crossing. The improved and expanded levee project was completed in 2005. The combined levees consist of 4.7 miles of earthen levee, floodwalls, rolling gates, stoplog and sandbag gaps, pump stations, gatewells and a flood door.

3.3. Hydraulics

The construction of the new bridge will be required to not increase the water surface elevation for the 100 year flood event. Hydraulic modeling and analysis shall be performed during the design phase, and will serve as backup documentation for a "No Rise Certification" needed for the Floodplain Development Permit.

Showing "No Rise" conditions for Options 3A and 3B can most likely be achieved if the existing bridges are removed. The total area of pier block out below the 100 year flood elevation and between the levees for the new bridge must be equal to or less than that of the existing bridges.

If one of the existing bridges were to be left in place, the location of the piers for any new structure would most likely need to match the existing pier locations between the levees in order to provide "No Rise" conditions.

4. Subsurface Information

At this reach of the Missouri River, the bedrock formation will likely include shale, or "hard grey sandstone" as described on the existing 1956 Platte Purchase Bridge plans. This softer material typically requires more costly foundations than the harder limestone found elsewhere along the river. According to boring logs from the existing Platte Purchase Bridge plans, the shale location varies from Elevation 630 near the Fairfax bank to Elevation 650 near the Riverside bank. This shale layer is overlaid with 70 to 100 feet of sand.

The existing Platte Purchase Bridge plans indicate an allowable rock bearing pressure of 12 tons per square foot for the caisson foundations. For the replacement bridge, large diameter drilled shafts could be used for the river pier foundations, with rock sockets drilled to the length required to support design loads. Drilled shaft load testing, such as with Osterberg cells, could be a cost-effective way to verify design capacity and possibly reduce socket length.

Additional subsurface information is available from existing bridge plans for the southbound U.S. 69 Bridge over I-635, which is nearly one half mile north of the Riverside bank. Borings taken in 1969 for the construction of this bridge terminated in the sand layer at Elevation 660.

The existing Platte Purchase Bridge plans indicate an allowable load of 20 tons per timber pile for approach foundations. These piles were driven to a minimum penetration in the sand layer, and do not extend to the shale. For the replacement bridge, steel H piles driven to the shale layer could be used in the approaches to the navigation unit. Dynamic pile testing could be used to help verify an increase in load resistance for the design of these foundations.

5. Structure Type Studies

Alternative 3 would remove both bridges and replace them with a new four-lane bridge, which removes the weight and size restrictions on the Platte Purchase Bridge left in place under Alternative 2. The new bridge would be constructed on one of two alignment options: upstream of the existing bridges (Build Option 3A) or on the alignment of the existing bridges (Build Option 3B). The new bridge would also accommodate a shared use path on one side. An out-to-out deck width of 73’-8” is assumed.

5.1 Navigation Unit

The USCG has stated that the proposed structure meet or exceed the existing horizontal navigation clearance of 406 feet. This span range can be easily accommodated with parallel flange steel plate girders, similar to other Missouri River bridges constructed in the last twenty five years. For the purpose of cost comparison between the build options, this superstructure type is assumed for the navigation unit. Because of the increase in structure depth from the existing trusses, a profile grade raise is required for a structure of this type.

For Option 3A, which has an alignment offset from the footprint of the existing bridges, a 420 foot navigation span was assumed. This places the new navigation span piers approximately in line with the existing navigation span piers.

For Option 3B (1 & 2), which has an alignment within the footprint of the existing bridges, a 510 foot navigation span was assumed. This places the new navigation span piers to the outside of the existing navigation span piers, and provides a much wider navigation opening. While parallel flange steel plate girders can be used for a span of this length, a haunched steel girder unit may also be a cost-effective option. Option 3B would require more structure depth than Option 3A because of the increase in span length, and also an increase in profile grade raise.

5.2 Fairfax Approach

The Fairfax approach spans have several obstacles for bent placement. These include the Fairfax levee and its landward drainage system, gas pipeline facilities, and a series of Union Pacific railroad tracks. Close coordination with all of these agencies will be required to determine a practical span layout. Option 3B will also require that the new bents avoid conflict with the driven timber piles of the existing bents. For the purpose of the comparative cost estimates, prestressed concrete approach spans were assumed landward of the Fairfax levee.

5.3 Riverside Approach

The Riverside approach spans are both landward and riverward of the Riverside levee. For the purpose of the comparative cost estimates, long span steel plate girder spans were assumed in order to minimize impact to the Riverside levee during bent construction.

6. Construction Cost Estimates

The total construction cost estimates include the cost of removing both existing bridges, and new bridge and roadway construction. Costs were primarily determined from square foot costs of recent Missouri River bridge construction, with a more detailed evaluation of the navigation unit superstructure and foundation elements.

	Alternate 3A Four Lanes Upstream Alignment with Argosy Pkwy Realignment		**Alternate 3B1 Four Lanes On Alignment with Existing Loop Road**		**Alternate 3B2 Four Lanes On Alignment with Argosy Pkwy Realignment**	
Grading & Drainage		$1,100,000		$900,000		$1,000,000
Base & Surface		$2,900,000		$1,900,000		$3,000,000
Bridges						
Bridge Removals	3,900,000		3,900,000		3,900,000	
Navigation Unit (1,544' length)	38,700,000		39,800,000		39,800,000	
Fairfax Approach (320' length)	3,100,000		3,100,000		3,100,000	
Riverside Approach (740' length)	12,200,000		12,300,000		11,900,000	
Argosy Realignment & Walls	1,500,000		-		1,500,000	
Bridges Total		$59,400,000		$59,100,000		$60,200,000
Miscellaneous, Incl. Mobilization (10% Contingency)		$6,300,000		$6,200,000		$6,500,000
TOTAL COST ROAD & BRIDGE CONSTRUCTION		**$69,700,000**		**$68,100,000**		**$70,700,000**

APPENDIX A-4
Utility Coordination Meeting Summary

Route 69 Missouri River Bridges Environmental Assessment
J4P2279B – Platte County, MO / Wyandotte County, KS
Utility Meeting
Central Solutions
January 17, 2013

Attendees:

MoDOT:
- Allan Zafft – MoDOT Transportation Planning Specialist
- Rick Orr – MoDOT District Utility Engineer

KDOT:
- Kris Norton – Road Design Leader
- Jim Pickett – Metro Engineer (Bonner Springs)
- Steve Taylor – KDOT Coordinating Engineer
- Mitch Sothers – KDOT Utilities Coordinator, Bonner Springs Office
- Terry Fleck – KDOT Bridge Engineer

Unified Govt Wyandotte County/Kansas City, KS:
- Bill Heatherman – County Engineer
- George Sooter – County Right of Way Manager
- Lideana Laboy – UG Traffic Engineer

Riverside:
- Travis Hoover – City Engineer

Fairfax Drainage District:
- Steve Daily – General Manager

Consultant Team:
- Ron Schikevitz – Burns & McDonnell, Project Manager
- Doug Waltemath – Burns & McDonnell, Bridge
- Dave Kocour – URS Corporation
- Todd Bond – URS Corporation

Magellan Pipeline:
- Tanya Cape
- Donny Vaughan

Southern Star Gas Pipeline:
- Bruce Lurtz
- Bob Bath

Attendees (Continued)

KPC Gas Pipeline:
Joe Fowler
John Amrein

Level 3 Communications:
Michael Logbeck
Luke Hempler
Jerry Woodall

AT&T: Joe Bullimore

KCPL: Jason Swan

Time Warner Cable: Ron Frank

BPU Power: Pam Cornelson

This meeting was scheduled to identify all of the pipelines and other utilities attached to the Fairfax and Platte Purchase Bridges that would require relocation to accommodate construction of a new crossing. The attached agenda was distributed prior to the meeting.

Project Background and Administration
Allan Zafft introduced the project as being jointly funded and directed by KDOT and MoDOT, with MoDOT taking the lead on the study and ultimate construction with KDOT participation.

Funding for a new bridge could be secured as early as 2013, so the importance of coordination the relocations is paramount to meet the project schedule.

Ron Schikevitz reviewed an overview of the alternatives, including the screening of any alternatives that would only provide for two lanes. A four-lane crossing would be maintained at all times. However, one of the alternatives being considered is to leave Platte Purchase in place to carry one direction, with a new structure replacing the Fairfax bridge.

Individual utility companies were requested to identify their respective facilities and potential impacts.

Magellan Pipeline
The Platte Purchase Bridge carries three Magellan petroleum lines as follows:

- 2-12" high pressure fluid lines on the east side
- 1-6" jet fuel line on the west side
- 1-8" inactive line on the east side

In addition to the lines on the bridge, they also maintain three 12" lines running within and parallel to the Fairfax levee.

The subaqueous lines that pass under the river to the east are no abandoned. It is believed this is due to scour and shallow cover to the river bed.

Southern Star Central Gas Pipeline
The Platte Purchase Bridge carries a Southern Star's 16" high pressure line on the west side of the Fairfax Bridge. It fees to their regulating station on the west side of the Fairfax Bridge on the north bank of the river.

The regulating station is on easement and has no major facilities extending from it to the north.

KPC Pipeline
KPC has a 12" high pressure gas line on the east side of the Fairfax Bridge.

This line is critical to their operations, carrying product from southwest United States to their terminal regulating/distribution station on the east side of NB US 69 on the north side of Argosy Parkway. Distribution to other gas companies occurs at the station for transmission to other destinations as far as Chicago.

All of the pipeline companies indicated that they could tolerate short outages (two to three days at the most) to accommodate construction and relocation. Winter is a critical time for them though as that is when they have highest demands.

KCPL
KCPL has primary service that run underground along the Argosy Parkway connection road in front the north abutments of both bridges. They have no service on the bridge itself.

AT&T
AT&T has conduit encased fiber on the west side of the Platte Purchase Bridge.

Time Warner
Time Warner has a 96-pair conduit encased fiber line on the west side of the Platte Purchase Bridge.

Level 3 Communications
Level 3 has a major communications transmission line in an abandoned Magellan pipe on the east side of the Platte Purchase Bridge.

BPU Power
BPU has some overhead facilities in the project area on the south side in the Fairfax area, but nothing directly on the bridge.

Other Discussion
By agreements with the DOTs, it appears all relocation costs of the utilities located on the bridges will be the responsibility of the utilities.

Discussion ensued questioning the possibility of leaving the Platte Purchase Bridge in place for utility service only. It was explained that the US Coast Guard would require a responsible entity to assume ownership and be responsible for the maintenance of the bridge. This also leads to the question as to the viability of the Coast Guard concern in dealing with an extra structure in the river for utilities in relative close proximity to the roadway bridge.

Several of the pipeline companies indicated that they would consider boring under the river if there was funding available and US Corps of Engineers requirements were reasonable. Although homeland security seems to suggest that placing the lines under the river would make them less susceptible to terrorism, the most recent bridge projects done by Harrington & Cortelyou (Burns & McDonnell), relocated the lines back to the new bridge.

Since the project may go design-build, planning for the relocations needs to proceed expeditiously. Furthermore, Doug Waltemath emphasized the need to coordinate the relocation activities with the bridge construction so that utility installations can occur prior to construction of the bridge deck.

The study team will be meeting with the Coast Guard and Corps of Engineers to coordinate general bridge design requirements, and the utility relocation issue will be discussed since there are so many to deal with on this project.

Route 69 Mo River Bridge EIS
J4P2279B

Utility Meeting Sign-in Sheet
January 17, 2013
Central Solutions

Name	Phone	Organization	email
Ron Schikowitz	816 822 3478	BMCD	RSchikowitz@burnsmcd.com
BRUCE LURTZ	913-422-6301	SSCGP	bruce.d.lurtz@sscgp
Bob Bath	913-422-6307	Southern Star	bob.a.bath@sscgp.com
Joe Bullimore	816-325-5658	AT+T	JOE.BULLIMORE@ATT.COM
Joe Fowler	913-764-6015	KPC Pipeline	jfowler@MVPipeline.com
John Amrein	913441.8441	KPC Pipeline	thelandco@aol.com
Todd Bond	913-344.1010	URS	todd.bond@urs.com
George Scoter	913-573-5413	ROW MGR UG	gscoter@wycokck.org
Jim Pickett	913-721-2754	KDOT-Metro	pickett@ksdot.org
STEVE TAYLOR	913 721 2754	KDOT	stevet@ksdot.org
Doug Wattmath	816-276-1597	BMcD	dwattmath@burnsmcd.com
Bill ~~HEATHERMAN~~	913-573-5416	Unif. Govt	bheatherman@wycokck.org
Jason Swan	816-420-4817	KCPL	JASON.SWAN@KCPL.com
Pam Cornelison	913-573-9529	BPU electric	PCornelison@BPU.com
Ron Frank	816-215-8864	TWCable	ron.frank@TWcable.com
Tonya Cape	816-896-0584	Magellan	tonya.cape@magellanlp.com
DANNY VAUGHAN	816-289-1719	MAGELLAN	don.vaughan@magellanlp.com
Steve Dailey	913-321-2260	Fairfax Drainage Dist	spdailey@sbcglobal.net
Michael Logbeck	913-710-9190	Level 3	mike.logbeck@level3.com
Luke Hempler	816-308-9659	Level 3 Com	luke.hempler@level3.com
Jerry Woodall	913-645-5032	Level Comm.	Jerry.Woodall@level3.com
MITCH SOTHERS	785-296-3529	KDOT.	mitchs@ksdot.org
TERRY FLECK	785-296-4203	KDOT	fleck@ksdot.org
DAVE KOCOUR	913.344.1058	URS	david.kocour@urs.com
Travis Hoover	816-372-9004	Riverside	thoover@riversidemo.com
Kris Norton	785 368 6429	KDOT-Road	Knorton@Ksdot.org
LIDEANA LABOY	913-573-5400	UG-WYCOKCK	llaboy@wycokck.org
Rick Orr	816-607-2233	MoDOT	Richard.Orr@modot.mo.gov

APPENDIX A-5
Existing River Crossing Conditions Memornadum

Missouri Department of Transportation
Kansas City District
600 Northeast Colbern Road
Lee's Summit, Missouri 64086

EXISTING RIVER CROSSING CONDITIONS MEMORANDUM

Date: July 15, 2013

Subject: Description and Function of the Existing River Crossing

From: U.S. 69 Bridges over the Missouri River EA Study Team
Ron Schikevitz

At its crossing of the Missouri River, U.S. 69 serves to transition the flow of traffic from 7th Street Trafficway in Kansas City, Kansas on the south side of the river to I-635 on the north side. It is classified as a Principal Arterial on the Metropolitan Regional Roadway Functional Classification Map approved by the FHWA and published by MARC. Seventh Street Trafficway is designated as a Class A thoroughfare on the Kansas City, Kansas *Master Street Plan.* In addition to linking with the regional transportation network, U.S. 69 also serves industrial truck traffic originating from or destined to businesses within Fairfax and emerging commercial and industrial development in Riverside.

As described in Section 1.2.1 of the Purpose and Need, both existing through-truss style bridges are more than 50 years old. The Fairfax Bridge, classified as structurally deficient, carries southbound traffic via two 10-foot-wide lanes and has no shoulders. The narrowness of the travel lanes limits the bridge's ability to conveniently accommodate the traffic mix that regularly crosses the bridge. The available vertical clearance also restricts the size of vehicles that can cross southbound into Fairfax. The Platte Purchase Bridge is classified as functionally obsolete due to the narrowness of its shoulders and limited vertical clearance of 15'-4". Both bridges are load rated well below the 70 ton standard for a commercial zone. The posted speed limit on both bridges is 50 miles per hour (mph).

Safety and Crash History

Crash records provided by MARC indicate a total of 14 crashes occurred on the bridges or on the approaches to both bridges for the five year period between 2007 and 2011. [1] The number of crashes per year varied from a maximum of seven in 2011 to zero in 2010. None of the crashes involved a fatality. Four involved minor injuries in addition to property damage. One of the crashes occurred in the vicinity of the southbound approach from the loop access road at the north end of the bridge that was removed with the completion of Argosy Parkway in 2008. This relatively minor crash history suggests that there is not a safety issue related to vehicular operations on the bridge [2] (see Appendix A). However, due to the narrow lane widths and lack and narrowness of shoulders, some drivers tend to shy into the adjacent lanes which can potentially result in an increase in the number of crashes in the future as traffic volumes increase.

---

[1] Crash data provided to MARC by MoDOT and KDOT statewide crash databases

[2] Crash statistics and safety data summarized or presented in this chapter are protected under federal law. See Appendix A.

Current and Future Traffic Volumes

Between 2002 and 2012, traffic volumes at the crossing published by KDOT have increased to 11,500 to 15,600 vehicles per day expressed as average daily traffic (ADT). Heavy trucks make up approximately 16 percent of the traffic mix traveling in both directions. Traffic volumes from year to year vary due to the role this crossing plays as an alternate route when other river crossings are closed or their capacity is reduced because of maintenance. During this study, traffic counts were conducted in October 2012, during a period when the I-635 Missouri River bridge was reduced to one lane in each direction and the U.S. 169 (Broadway Extension) was closed north of downtown Kansas City, Missouri. Under these conditions, approximately 26,000 ADT was counted, doubling the traffic volume that normally crosses the bridges. Traffic congestion and substantially longer than normal traffic back-ups were observed at the U.S. 69/7th Street and Kindleberger Road intersection during this period. In December 2012, additional counts were obtained during peak hours when the I-635 and U.S. 169 bridges were opened back to their full capacity. As expected, those counts were more representative of the published volumes. Based on historical and the 2012 traffic counts, the average traffic volume for this crossing was calculated to be 14,500 ADT.

MARC's travel demand model estimates future traffic on the regional roadway network based on expected growth and demographic trends. The MARC model projects that traffic will increase by approximately 35 percent (or approximately 1 percent per year) from 2010 through the project planning horizon of 2040. Applying this growth rate to the current average ADT of 14,500 for this crossing, results in a future forecast traffic volume of 19,500 ADT for 2040 for the U.S. 69 crossing.

The current and future economic demographics of the Riverside and Fairfax traffic analysis zones are not currently reflected in the MARC traffic forecast, as confirmed by discussions with the city of Riverside and the Unified Government. Planned industrial developments on both sides of the river are estimated to add approximately 2,500 more vehicle trips per day at the crossing in 2040. Therefore, for planning purposes, a future ADT of 22,000 has been determined as a valid planning level volume that needs to be accommodated at this river crossing in 2040. Based on the MARC travel demand forecast, future traffic volumes could increase above 22,000 ADT by 2040.

Traffic Congestion and Capacity

Level of service (LOS) is a measure used by traffic engineers to describe roadway congestion. LOS is most commonly used to analyze streets and highways by categorizing the flow of traffic with corresponding safe driving conditions. It is a measure of the number of vehicles on the road and speed at which traffic moves along a roadway segment. LOS is expressed using a six-level, A to F, rating system. LOS A is the best, most open traffic flow with no congestion, with LOS F is the poorest traffic flow with stop-and-go conditions.

What is Level of Service (LOS)?

Level of service is described as:

- **LOS A** represents free flow.
- **LOS B** is stable traffic flow with minor delays, speeds restricted by travel conditions.
- **LOS C** is stable traffic flow where speeds and maneuverability are closely controlled due to higher traffic volumes.
- **LOS D** represents high-density, but stable traffic flow with slight declines in the travel speed.
- **LOS E** unstable flow and represents operating conditions at or near roadway capacity with considerable delay.
- **LOS F** is forced flow with very low speeds, volumes exceed capacity. Evidenced by stop-and-go traffic.

Levels of service were calculated for traffic operations on the bridges under existing and projected year 2040 peak hour traffic conditions in accordance with standard procedures.[3] The analysis was based on the physical characteristics of the existing bridges including their profile, lane widths, and shoulder or 'shy' distance to the outside barriers. Under current and future 2040 traffic conditions, the bridges serve traffic at acceptable LOS A and B, respectively, which suggests that the current configuration of two lanes in each direction adequately serves current and projected traffic. However, it is highly likely that due to its physical condition, the Fairfax Bridge will need to be closed to traffic permanently before the year 2040 requiring all of the traffic to be carried on the existing two-lane Platte Purchase Bridge. This would result in unacceptable LOS E and F in the northbound and southbound lanes of the Platte Purchase Bridge, respectively.

Truck Operations

The vertical clearance required for barge traffic to navigate the Missouri River established the elevation of the existing bridges. Combined with the existing topography in the area, the roadways approaching each bridge have a slope of approximately five percent. Combined with the predominance of large trucks using U.S. 69, these factors affect the speed and flow of traffic on and approaching the crossing. Trucks approaching the Platte Purchase Bridge from the south depart the Kindleberger Road intersection from essentially a stop or at very slow speeds, climbing the approach to the bridge below the 50 mph posted speed limit, delaying other vehicles and causing some to attempt to pass the slower moving vehicles. From the north, trucks must quickly decelerate from speeds near 60 mph to cross the bridge traveling downhill, to potentially stop or turn at the Kindleberger Road intersection.

Because of the relatively high percentage of heavy trucks (16 percent)[4], narrowness of the travel lanes, and narrowness and lack of shoulders, some large truck operators often operate as though there is only one traffic lane in each direction. Many of the larger trucks are carrying petroleum products or other heavy goods. Many of the large truck operators have expressed concerns over traffic safety related to the differential in travel speeds between cars and trucks traveling in both directions.

System Linkage Reliability

A number of businesses within Fairfax and Riverside rely on each other for goods and services. General Motors in Fairfax relies heavily on 'just in time' delivery of parts and off-line sequenced assemblies from Johnson Controls in Riverside. Reliability of the crossing is further stressed by the large number of trucks used to distribute products from storage and distribution companies located in Fairfax. As one example, approximately 80 percent of the petroleum products sold in the Kansas City metropolitan area is transported out of Fairfax daily. Discussions with stakeholders and members of the Fairfax Industrial Association indicated that bridge maintenance that affects the capacity of the U.S. 69 crossing is detrimental to their ability to reliably satisfy their customer and regional market needs.

---

[3] *Highway Capacity Manual*, Special Report 209; Transportation Research Board, 2010.
[4] MoDOT - 2011 Kansas City District Traffic Volume and Commercial Vehicle Count Map