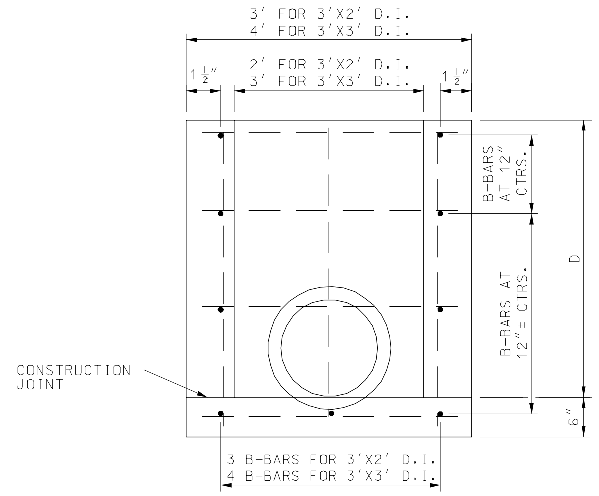

SECTION B-B

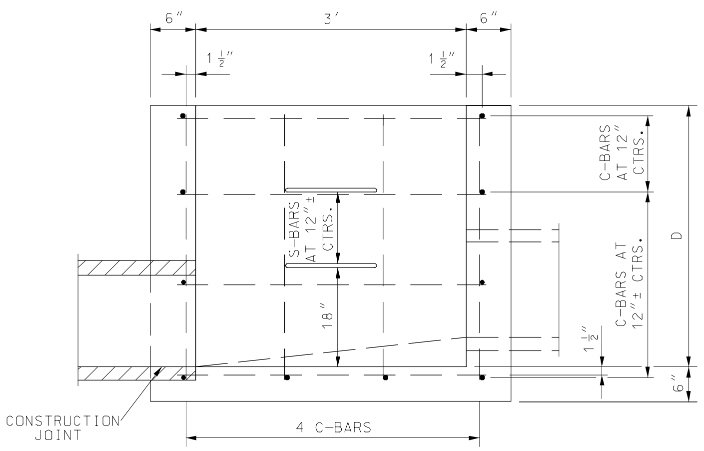

SECTION A-A

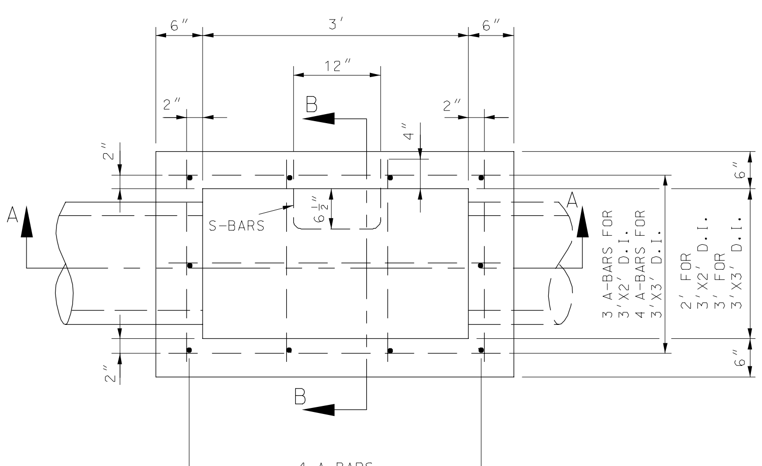

PLAN
(WITHOUT COVER OR SPILLWAY)

BASIC DROP INLET

BAR BILLS								
3 X 2 DROP INLET								
DEPTH "D"	#4 A-BARS VERTICAL WALLS		#4 B-BARS LG.- FLOOR & SIDEWALLS		#4 C-BARS LATERAL FLOOR & ENDWALLS		#6 S-BARS STEPS	
	NO.	LENGTH	NO.	LENGTH	NO.	LENGTH	NO.	LENGTH
2'-0"	10	2'-3"	7	3'-9"	8	2'-9"		
2'-3"	10	2'-6"	7	3'-9"	8	2'-9"		
2'-6"	10	2'-9"	9	3'-9"	10	2'-9"		
3'-0"	10	3'-3"	9	3'-9"	10	2'-9"		
3'-6"	10	3'-9"	11	3'-9"	12	2'-9"		
4'-0"	10	4'-3"	11	3'-9"	12	2'-9"	2	2'-9"
4'-6"	10	4'-9"	13	3'-9"	14	2'-9"	2	2'-9"
5'-0"	10	5'-3"	13	3'-9"	14	2'-9"	3	2'-9"
5'-6"	10	5'-9"	15	3'-9"	16	2'-9"	3	2'-9"
6'-0"	10	6'-3"	15	3'-9"	16	2'-9"	4	2'-9"
6'-6"	10	6'-9"	17	3'-9"	18	2'-9"	4	2'-9"
7'-0"	10	7'-3"	17	3'-9"	18	2'-9"	5	2'-9"
7'-6"	10	7'-9"	19	3'-9"	20	2'-9"	5	2'-9"
8'-0"	10	8'-3"	19	3'-9"	20	2'-9"	6	2'-9"
8'-6"	10	8'-9"	21	3'-9"	22	2'-9"	6	2'-9"
9'-0"	10	9'-3"	21	3'-9"	22	2'-9"	7	2'-9"
9'-6"	10	9'-9"	23	3'-9"	24	2'-9"	7	2'-9"
10'-0"	10	10'-3"	23	3'-9"	24	2'-9"	8	2'-9"

3 X 3 DROP INLET								
DEPTH "D"	#4 A-BARS VERTICAL WALLS		#4 B-BARS LG.- FLOOR & SIDEWALLS		#4 C-BARS LATERAL FLOOR & ENDWALLS		#6 S-BARS STEPS	
	NO.	LENGTH	NO.	LENGTH	NO.	LENGTH	NO.	LENGTH
2'-0"	12	2'-3"	8	3'-9"	8	3'-9"		
2'-3"	12	2'-6"	8	3'-9"	8	3'-9"		
2'-6"	12	2'-9"	10	3'-9"	10	3'-9"		
3'-0"	12	3'-3"	10	3'-9"	10	3'-9"		
3'-6"	12	3'-9"	12	3'-9"	12	3'-9"		
4'-0"	12	4'-3"	12	3'-9"	12	3'-9"	2	2'-9"
4'-6"	12	4'-9"	14	3'-9"	14	3'-9"	2	2'-9"
5'-0"	12	5'-3"	14	3'-9"	14	3'-9"	3	2'-9"
5'-6"	12	5'-9"	16	3'-9"	16	3'-9"	3	2'-9"
6'-0"	12	6'-3"	16	3'-9"	16	3'-9"	4	2'-9"
6'-6"	12	6'-9"	18	3'-9"	18	3'-9"	4	2'-9"
7'-0"	12	7'-3"	18	3'-9"	18	3'-9"	5	2'-9"
7'-6"	12	7'-9"	20	3'-9"	20	3'-9"	5	2'-9"
8'-0"	12	8'-3"	20	3'-9"	20	3'-9"	6	2'-9"
8'-6"	12	8'-9"	22	3'-9"	22	3'-9"	6	2'-9"
9'-0"	12	9'-3"	22	3'-9"	22	3'-9"	7	2'-9"
9'-6"	12	9'-9"	24	3'-9"	24	3'-9"	7	2'-9"
10'-0"	12	10'-3"	24	3'-9"	24	3'-9"	8	2'-9"

NOTE:

FOR EACH SPILLWAY REDUCE LENGTH OF 2 A-BARS 1'-0" EACH AND ELIMINATE ONE B-BAR

BAR BILL FOR TYPE A COVER

3' X 2' D.I.
5 - #4 BARS 3'-9" LONG
5 - #4 BARS 2'-9" LONG

3' X 3' D.I.
5 - #4 BARS 3'-9" LONG
5 - #3 BARS 3'-9" LONG

(1) 3-#4 BARS 3'-9" LONG EQUALLY SPACED.

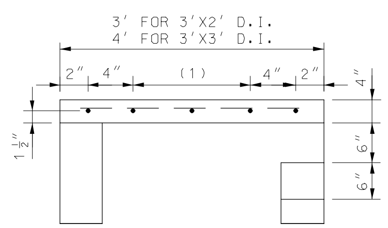

SECTION B-B

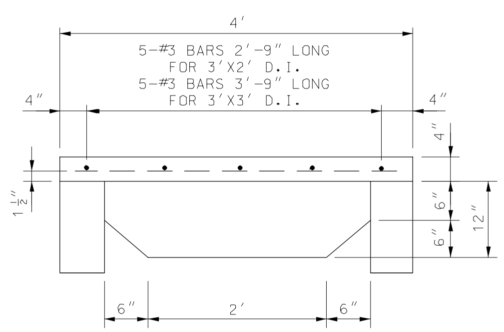

SECTION A-A

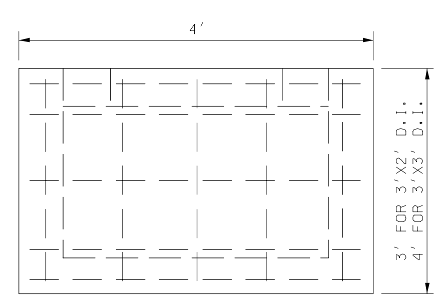

PLAN
(PRECAST CONCRETE SLAB COVER)

TYPE A COVER
AND SPILLWAY DETAILS

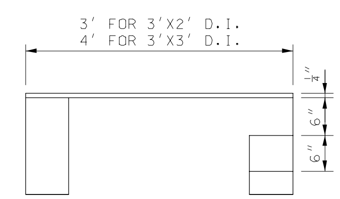

SECTION B-B

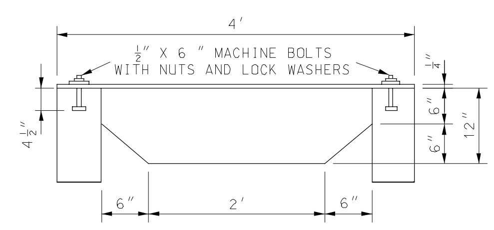

SECTION A-A

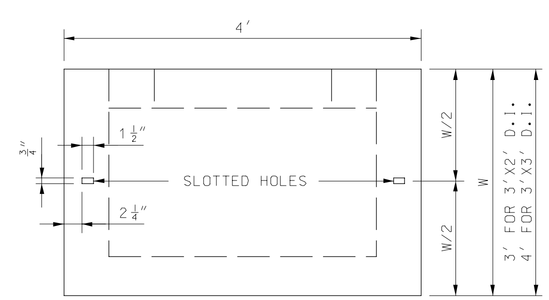

PLAN
(1/4" STEEL PLATE COVER)

TYPE B COVER
AND SPILLWAY DETAILS

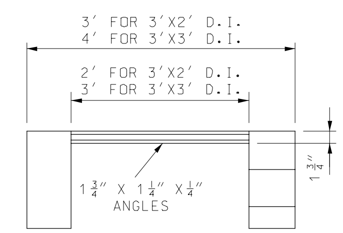

SECTION B-B

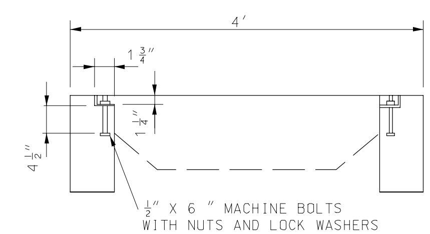

SECTION A-A

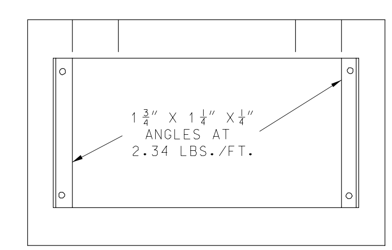

GRATE NOT SHOWN

ANY GRATE CAPABLE OF SUPPORTING A UNIFORMLY DISTRUBUTED LOAD OF 300# PER SQ. FOOT CONFORMING TO STD. SPECIFICATIONS CAN BE USED.

PLAN
(GRATE AND BEARING PLATE)

TYPE C COVER

QUANTITIES										
3' X 2' DROP INLET										
DEPTH "D"	TYPE A COVER				TYPE B OR C COVER					
	1 SPILLWAY		2 SPILLWAY		TYPE C ONLY NO SPILLWAY		1 SPILLWAY		2 SPILLWAY	
	CONC. CU. YD.	STEEL LBS.	CONC. CU. YD.	STEEL LBS.	CONC. CU. YD.	STEEL LBS.	CONC. CU. YD.	STEEL LBS.	CONC. CU. YD.	STEEL LBS.
2'-0"	0.86	67	0.81	63	0.76	47	0.71	43	0.66	39
2'-3"	0.92	69	0.87	65	0.82	49	0.77	45	0.72	41
2'-6"	0.98	79	0.93	75	0.88	59	0.83	55	0.78	51
3'-0"	1.09	83	1.04	79	0.99	63	0.94	59	0.89	55
3'-6"	1.20	95	1.15	91	1.10	75	1.05	71	1.00	67
4'-0"	1.31	106	1.26	102	1.21	86	1.16	82	1.11	78
4'-6"	1.42	118	1.37	114	1.32	98	1.27	94	1.22	90
5'-0"	1.53	125	1.48	121	1.43	105	1.38	101	1.33	97
5'-6"	1.64	139	1.59	133	1.54	117	1.49	113	1.44	109
6'-0"	1.75	146	1.70	142	1.65	126	1.60	122	1.55	118
6'-6"	1.86	158	1.81	154	1.76	138	1.71	134	1.66	130
7'-0"	1.97	165	1.92	161	1.87	145	1.82	141	1.77	137
7'-6"	2.08	177	2.03	173	1.98	157	1.93	153	1.88	149
8'-0"	2.20	184	2.15	180	2.10	164	2.05	160	2.00	156
8'-6"	2.31	196	2.26	192	2.21	176	2.16	172	2.11	168
9'-0"	2.42	204	2.37	200	2.32	184	2.27	180	2.22	176
9'-6"	2.53	216	2.48	212	2.43	196	2.38	192	2.33	188
10'-0"	2.64	223	2.59	219	2.54	203	2.49	199	2.44	195
3' X 3' DROP INLET										
2'-0"	1.06	84	1.01	80	0.91	58	0.86	54	0.81	50
2'-3"	1.13	86	1.08	82	0.98	60	0.93	56	0.88	52
2'-6"	1.19	98	1.15	94	1.04	72	0.99	68	0.94	64
3'-0"	1.32	102	1.27	98	1.17	76	1.12	72	1.07	68
3'-6"	1.45	116	1.40	112	1.30	90	1.25	86	1.20	82
4'-0"	1.58	128	1.53	124	1.43	102	1.38	98	1.33	94
4'-6"	1.71	142	1.66	138	1.56	116	1.51	112	1.46	108
5'-0"	1.84	150	1.79	146	1.69	124	1.64	120	1.59	116
5'-6"	1.97	164	1.92	160	1.82	138	1.77	134	1.72	130
6'-0"	2.10	173	2.05	169	1.95	147	1.90	143	1.85	139
6'-6"	2.23	187	2.18	183	2.08	161	2.03	157	1.98	153
7'-0"	2.36	195	2.31	191	2.21	169	2.16	165	2.11	161
7'-6"	2.49	209	2.44	205	2.34	183	2.29	179	2.24	175
8'-0"	2.62	217	2.57	213	2.47	191	2.42	187	2.37	183
8'-6"	2.75	231	2.70	227	2.60	205	2.55	201	2.50	197
9'-0"	2.88	239	2.83	235	2.73	213	2.68	209	2.63	205
9'-6"	3.01	253	2.96	249	2.86	227	2.81	223	2.76	219
10'-0"	3.14	261	3.09	257	2.99	235	2.94	231	2.89	227

QUANTITIES INCLUDE 0.15 C.Y. CONCRETE FOR INVERT

DEDUCTIONS FROM CONCRETE QUANTITIES FOR PIPE OPENINGS

SIZE	CU. YD.
12"	0.03
15"	0.04
18"	0.05
21"	0.07
24"	0.09

TYPE "A" COVER CONCRETE & STEEL QUANTITIES INCLUDED IN TABLE

TYPE "B" COVER FABRICATED STRUCTURAL STEEL

4' X 3' COVER = 130 LBS
4' X 4' COVER = 170 LBS

TYPE "C" COVER GRATES & BEARING PLATES

3' X 2' D.I. = 50 LBS
3' X 3' D.I. = 70 LBS

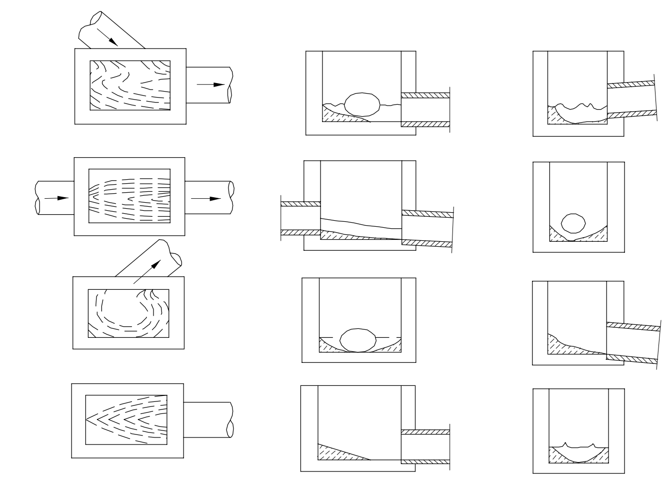

PLAN | SIDE VIEW | END VIEW

TYPICAL INVERTS

GENERAL NOTES:

THE TYPE OF COVER, "A", "B" OR "C", WILL BE DESIGNATED ON THE DETAIL PLANS. DROP INLET MAY BE BUILT WITH OR WITHOUT SPILLWAYS WITH TYPE "C" COVER.

NO DIRECT PAYMENT WILL BE MADE FOR CUTTING PIPE.

ALL SHOP RIVETED CONTACT SURFACES OF GRATES SHALL BE GIVEN TWO COATS OF SINGLE COMPONENT INORGANIC ZINC OR ORGANIC, ZINC-RICH PAINT, MEETING THE APPROVAL OF THE ENGINEER.

TYPE "B" COVERS SHALL BE PAINTED TWO COATS OF PAINT APPLIED IN THE SHOP OR FIELD, BY ANY METHOD THAT WILL INSURE A COMPLETE COVERAGE FOR EACH COAT.

THE CONCRETE FOR INVERTS SHALL BE PLACED AFTER COMPLETION OF THE DROP INLET BOX.

NO DIRECT PAYMENT WILL BE MADE FOR CUTTING OR BENDING REINFORCING BARS AT PIPE OPENINGS.

MISSOURI HIGHWAYS AND TRANSPORTATION COMMISSION

DROP INLET

TYPE E

DATE:________ EFFECTIVE: 04-01-1983

604.23B

1/1