Outline

1. Project background
2. What has been done and what have we learned
3. How the results affect stay cable design
4. Questions raised from the Canadian experiments?
5. How others have responded to the issue and follow on work?
6. What is left to be done?

Questions raised

- Effects of turbulence?
- Influence of slowly varying mean wind speed, ascending or descending?
- Can we predict the observed dynamic behaviour based on tests on a stationary model?
- Influence of motion?

Additional tests in Italy

- Prototype PEHD tube, 0.316 m diam (12 in)., smooth;
- 5-16 m/s [11-36 mph] (*Re*= 100,000 to 350,000);
- 90º to 20º relative cable-wind angle;
- 2.5% and 11% turbulence intensity.

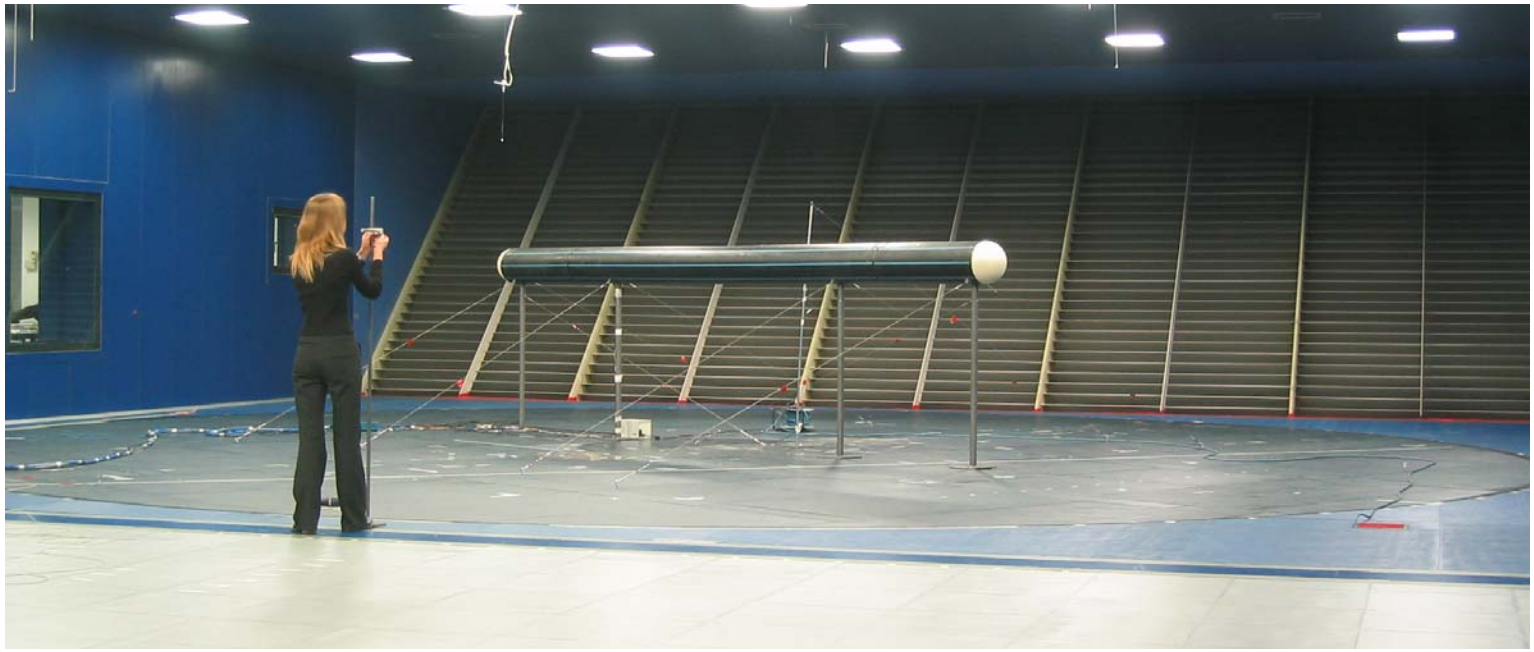

Test set-up

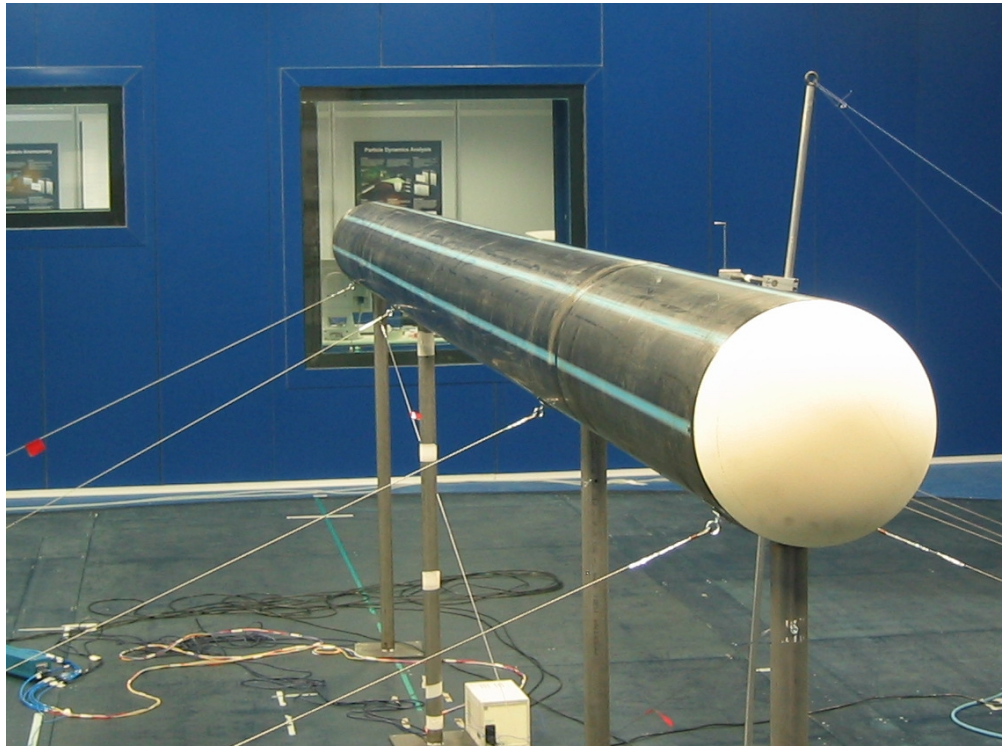

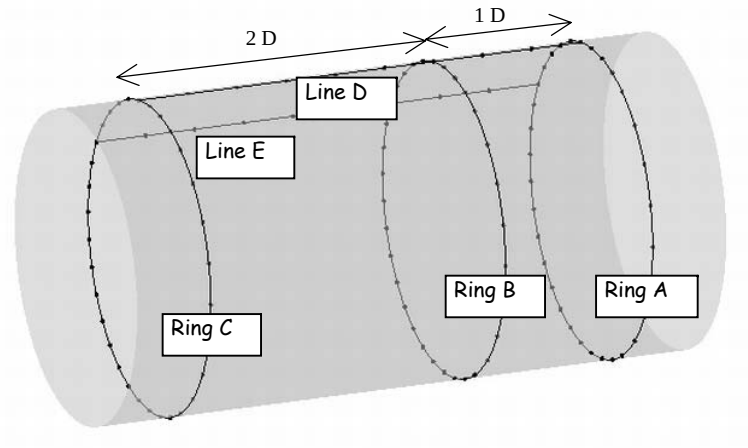

Politecnico di Milano Wind Tunnel (14 m x 4 m)

Wind turbulence

1. 2.6% Iu
2. 11.2% Iu

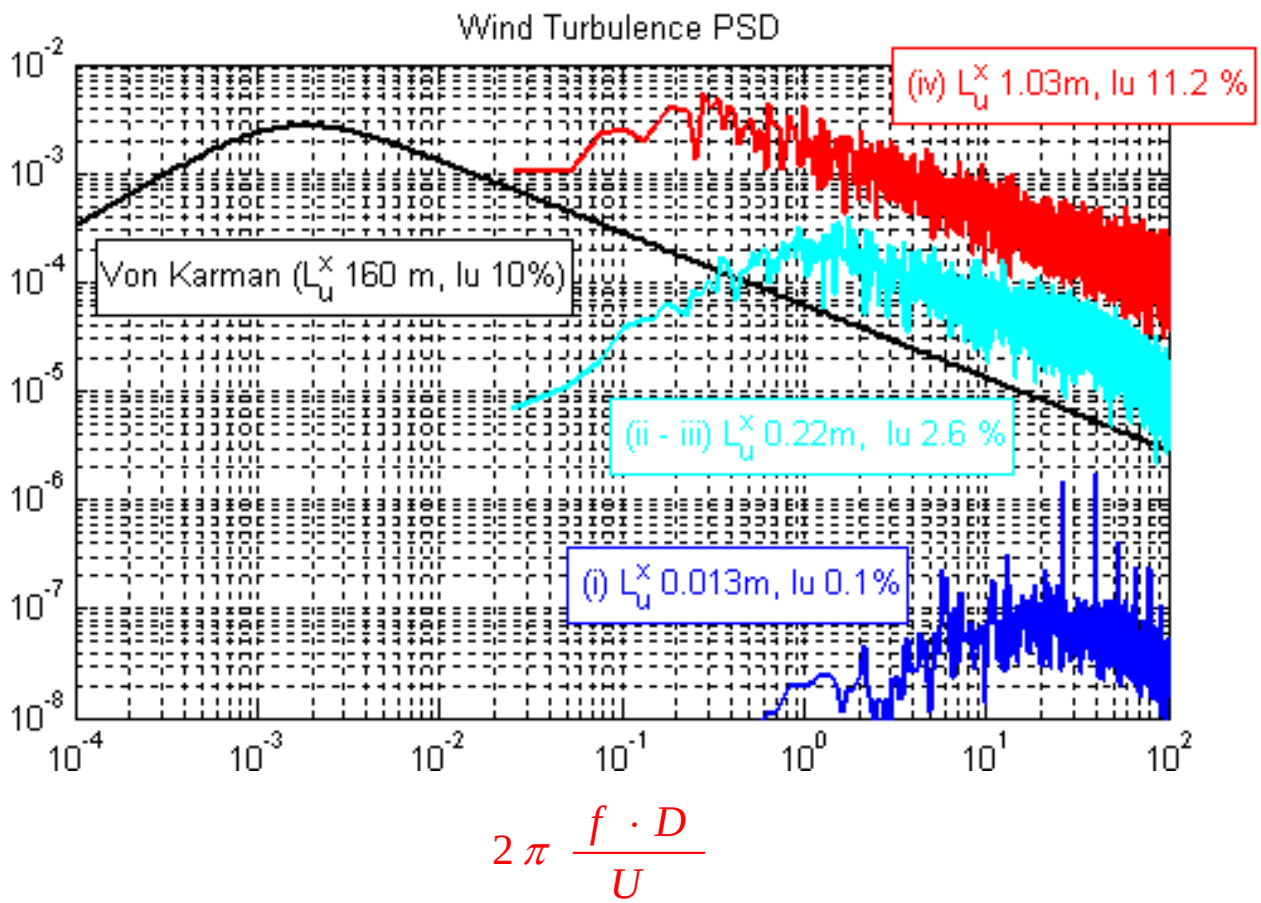

$$\frac{S_{uu} \cdot f}{U^2}$$

$$2\pi \frac{f \cdot D}{U}$$

Effects of turbulence

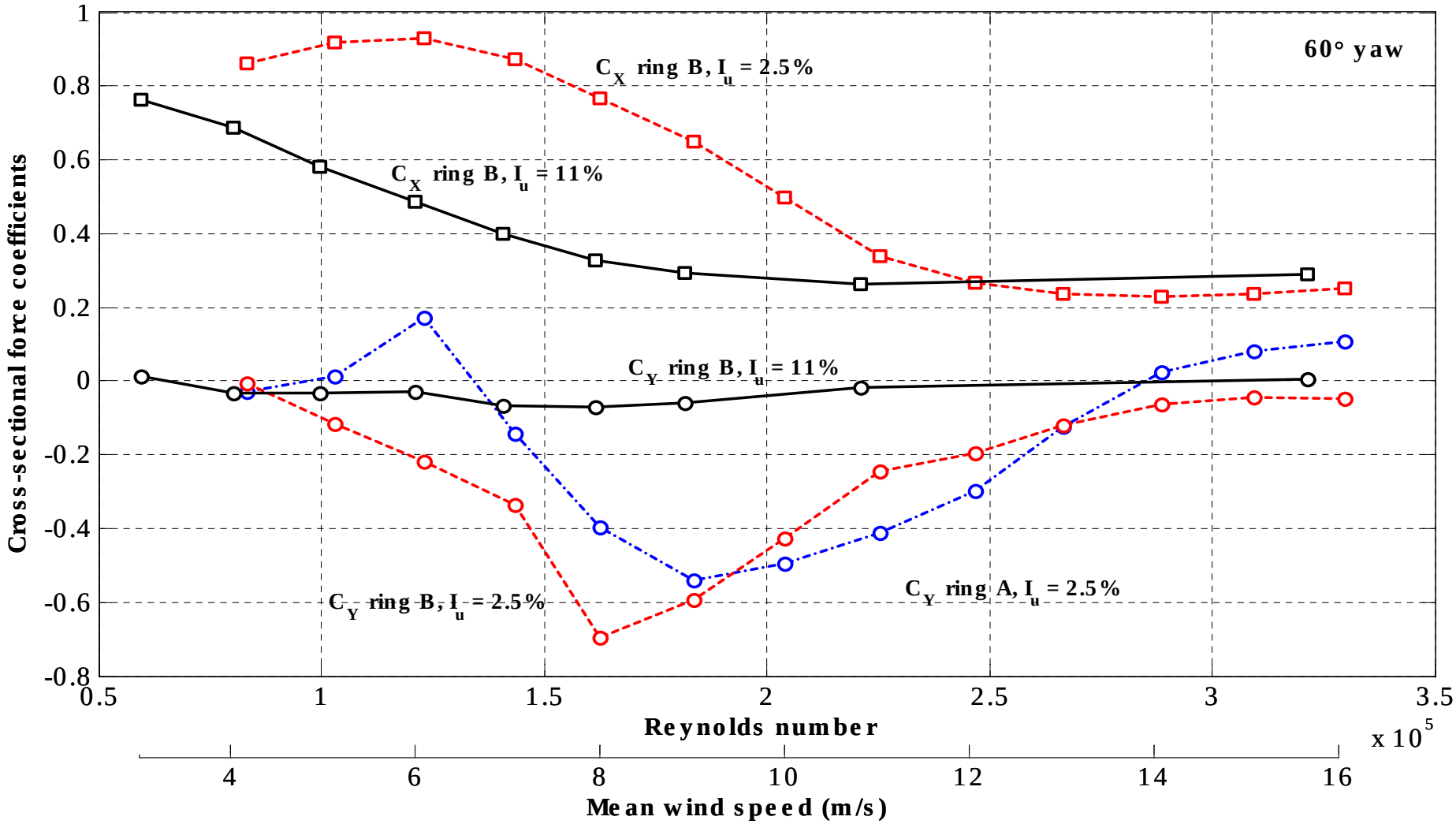

Static pressure field

2.5% turbulence

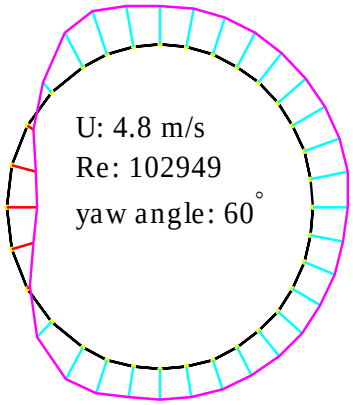

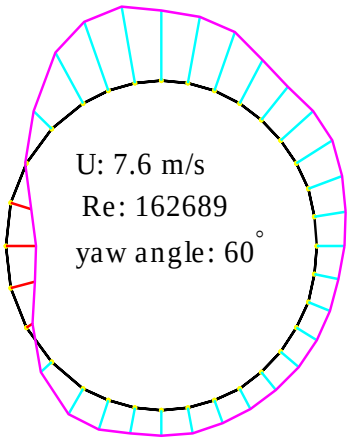

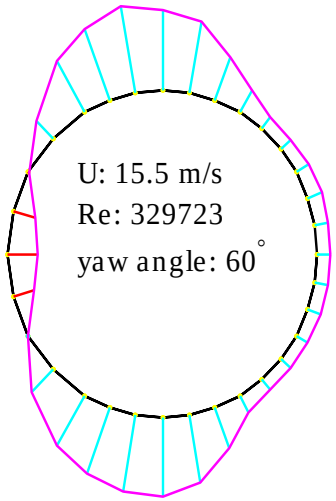

11% turbulence

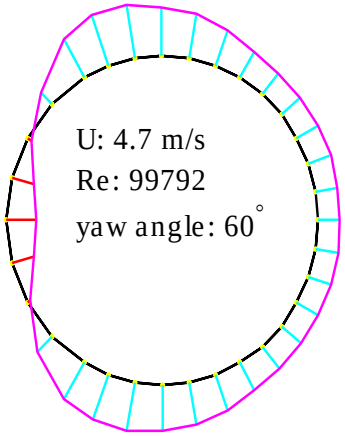

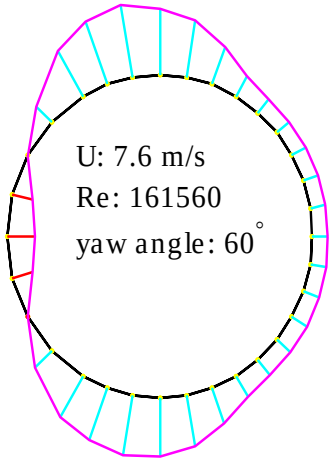

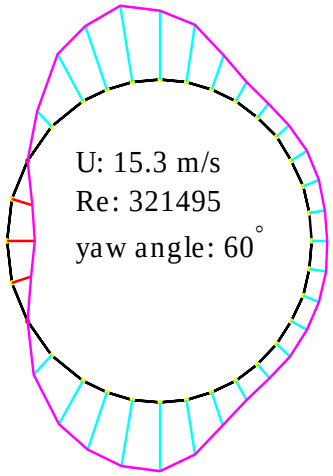

NRC·CNRC
NRCaerospace.com

60º cable-wind angle
ring B
2.5% turbul.
5 m/s [11 mph]

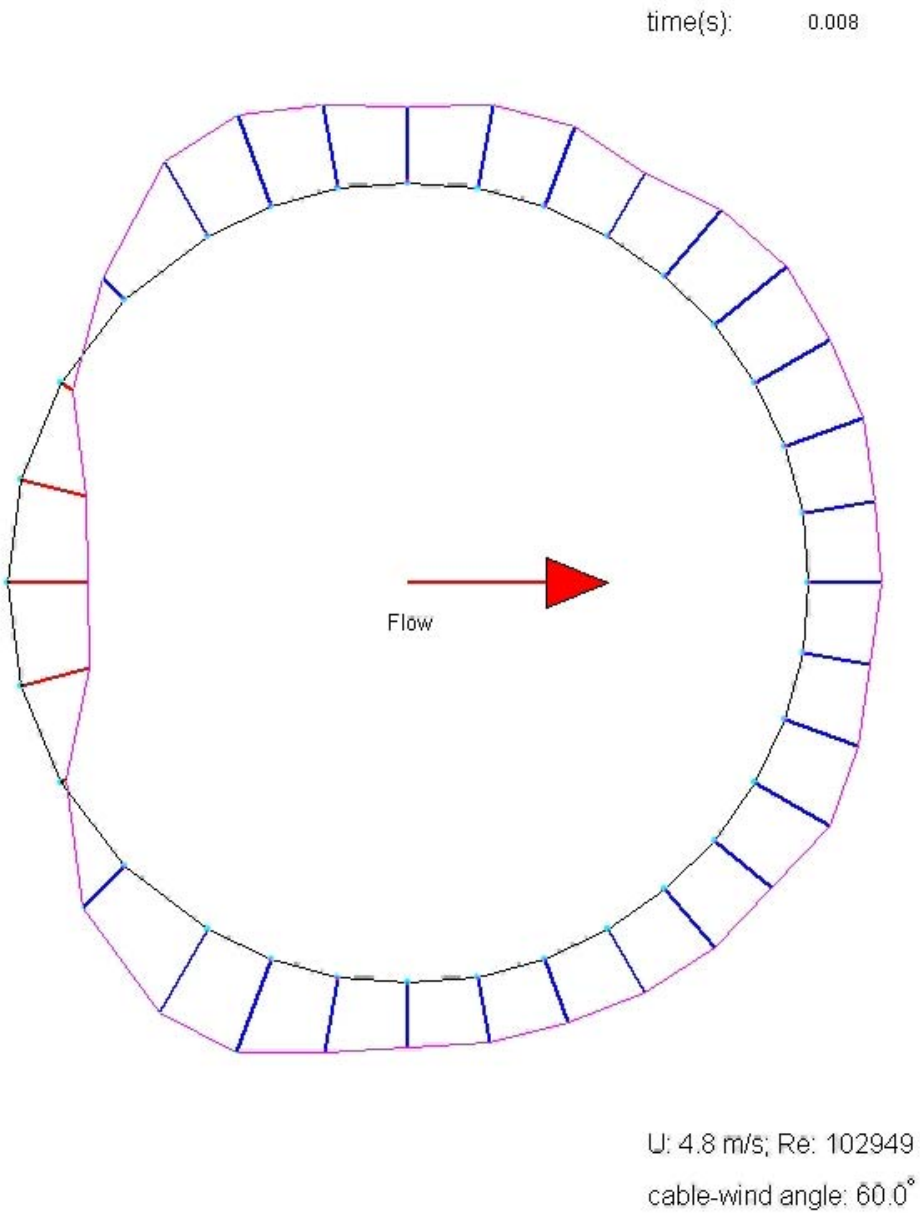

NRC·CNRC
NRCaerospace.com

60º cable-wind angle
ring B
2.5% turbul.
10 m/s [22 mph]

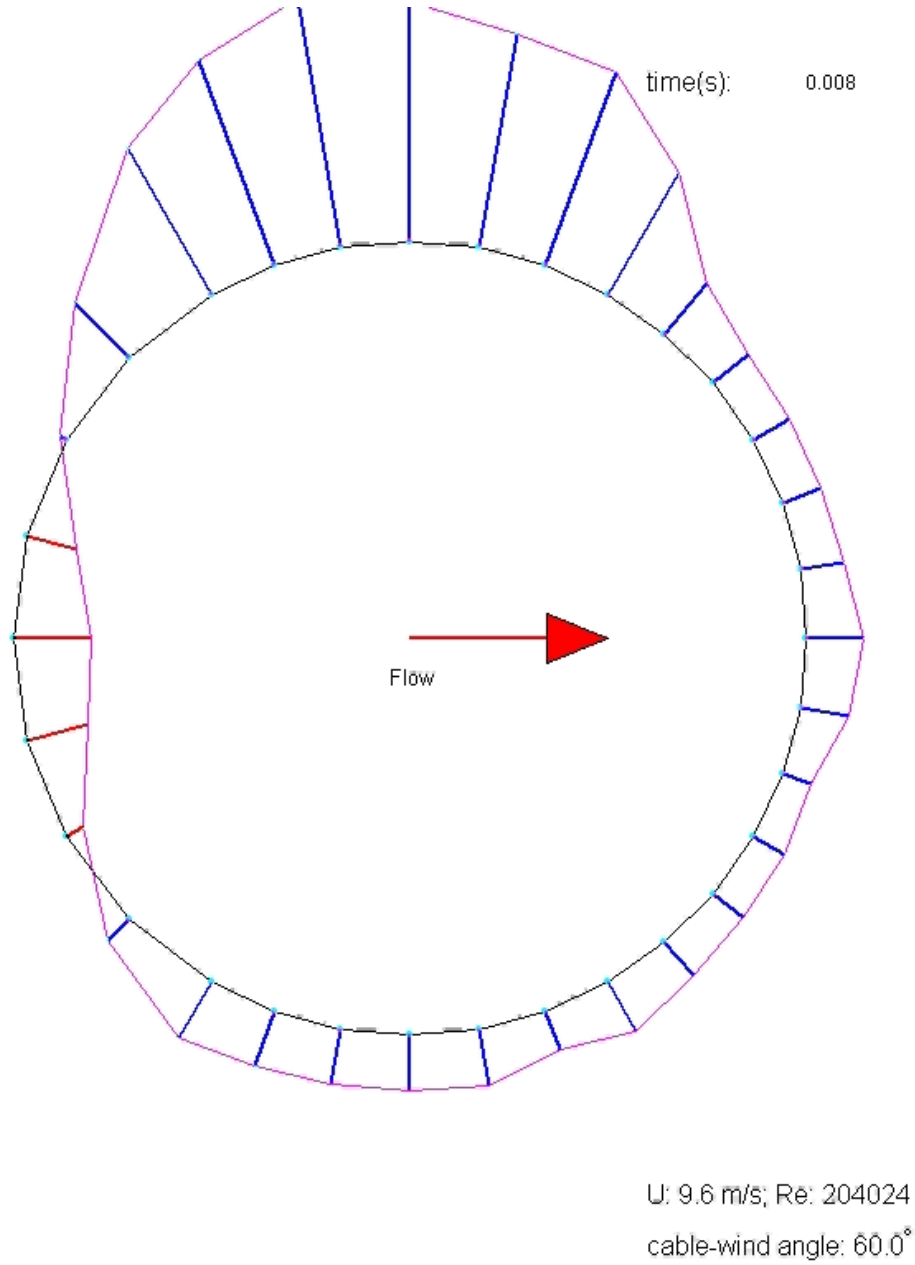

NRC·CNRC
NRCaerospace.com

60º cable-wind angle
ring B
2.5% turbul.
13 m/s [30 mph]

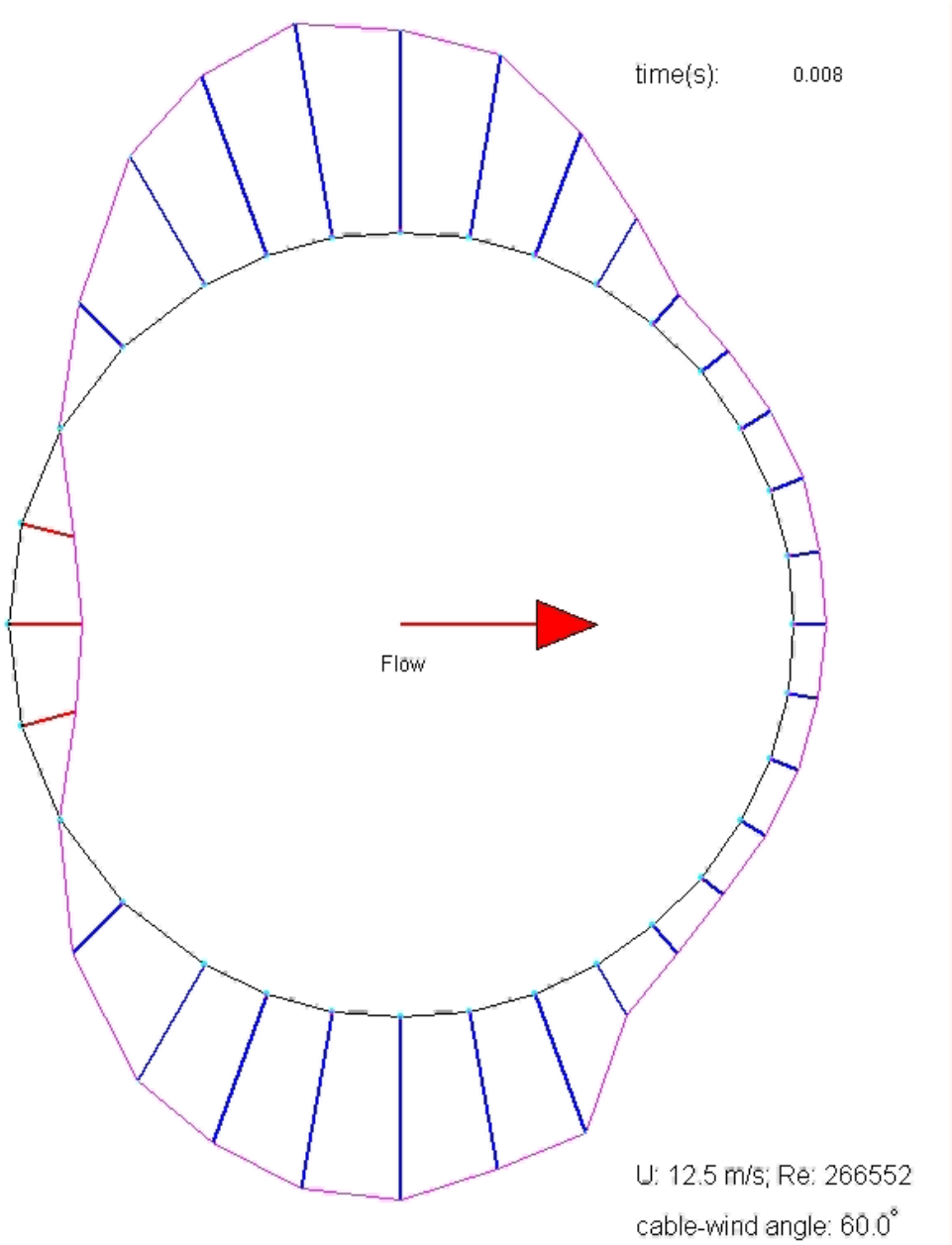

Hysteresis?

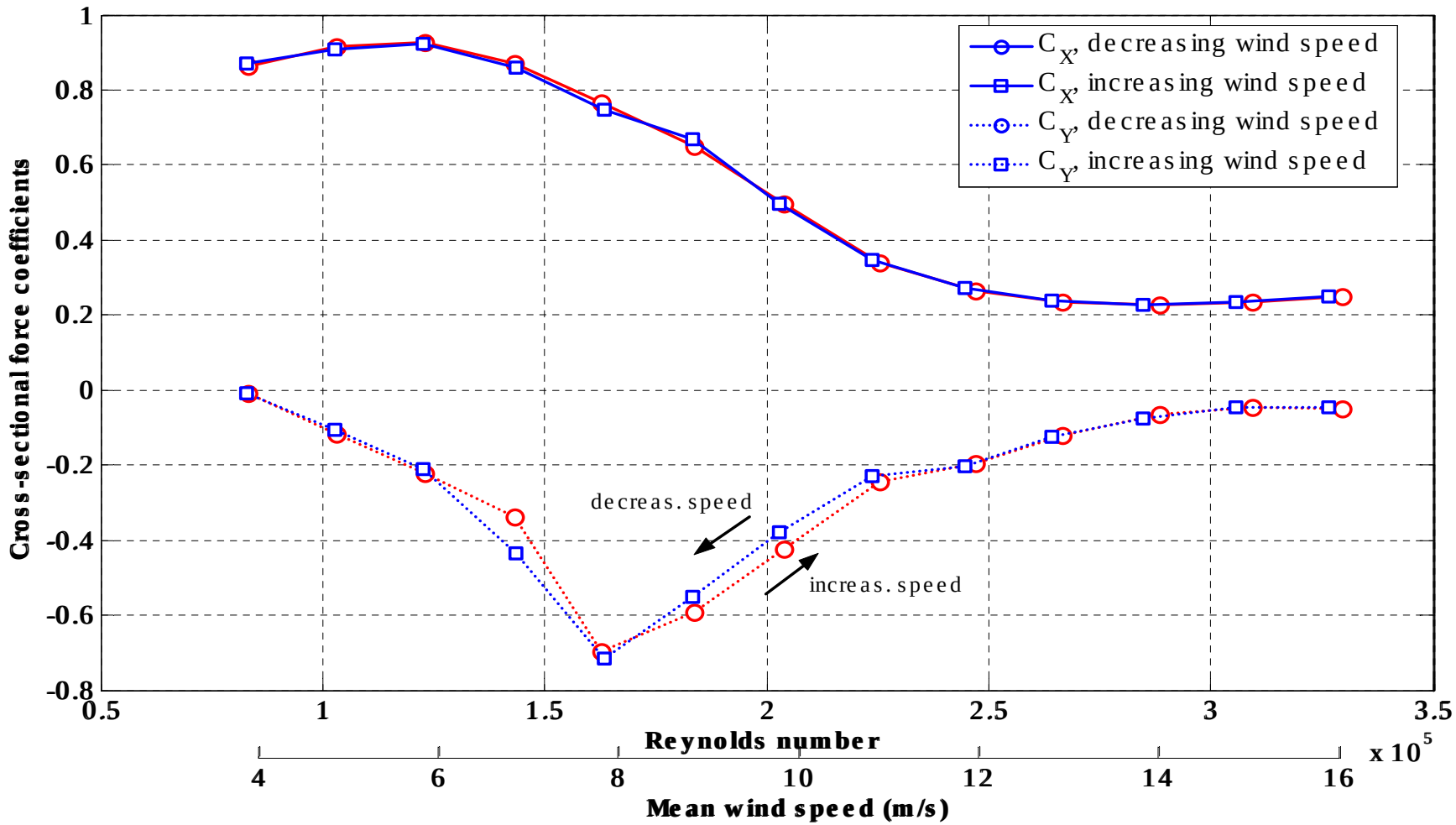
C_X, decreasing wind speed
C_X, increasing wind speed
C_Y, decreasing wind speed
C_Y, increasing wind speed
decreas. speed
increas. speed
Cross-sectional force coefficients
Reynolds number
x 10^5
Mean wind speed (m/s)
1
0.8
0.6
0.4
0.2
0
-0.2
-0.4
-0.6
-0.8
0.5
1
1.5
2
2.5
3
3.5
4
6
8
10
12
14
16

Transient behaviour?

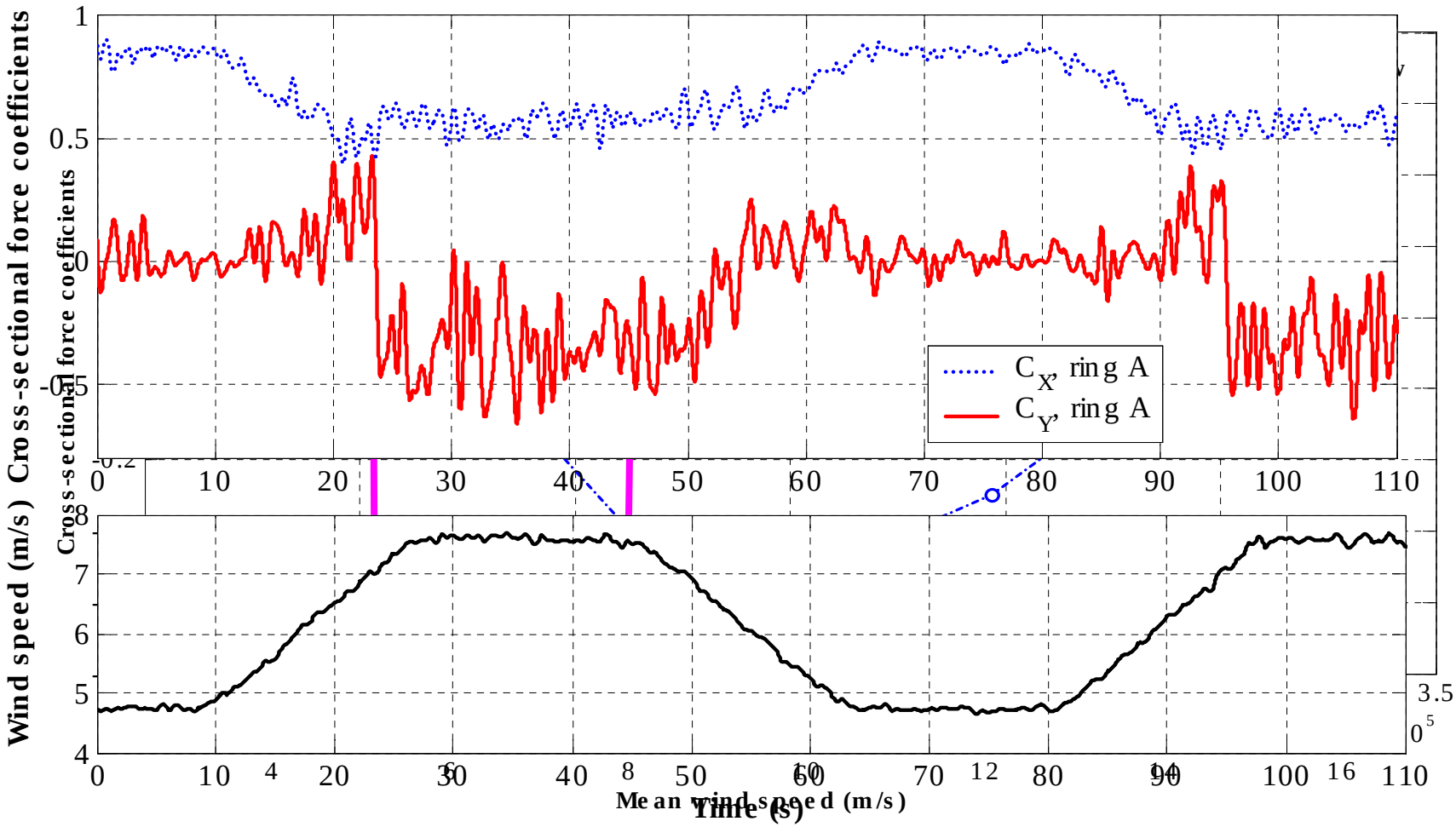

Along wind, 2.5% turb.

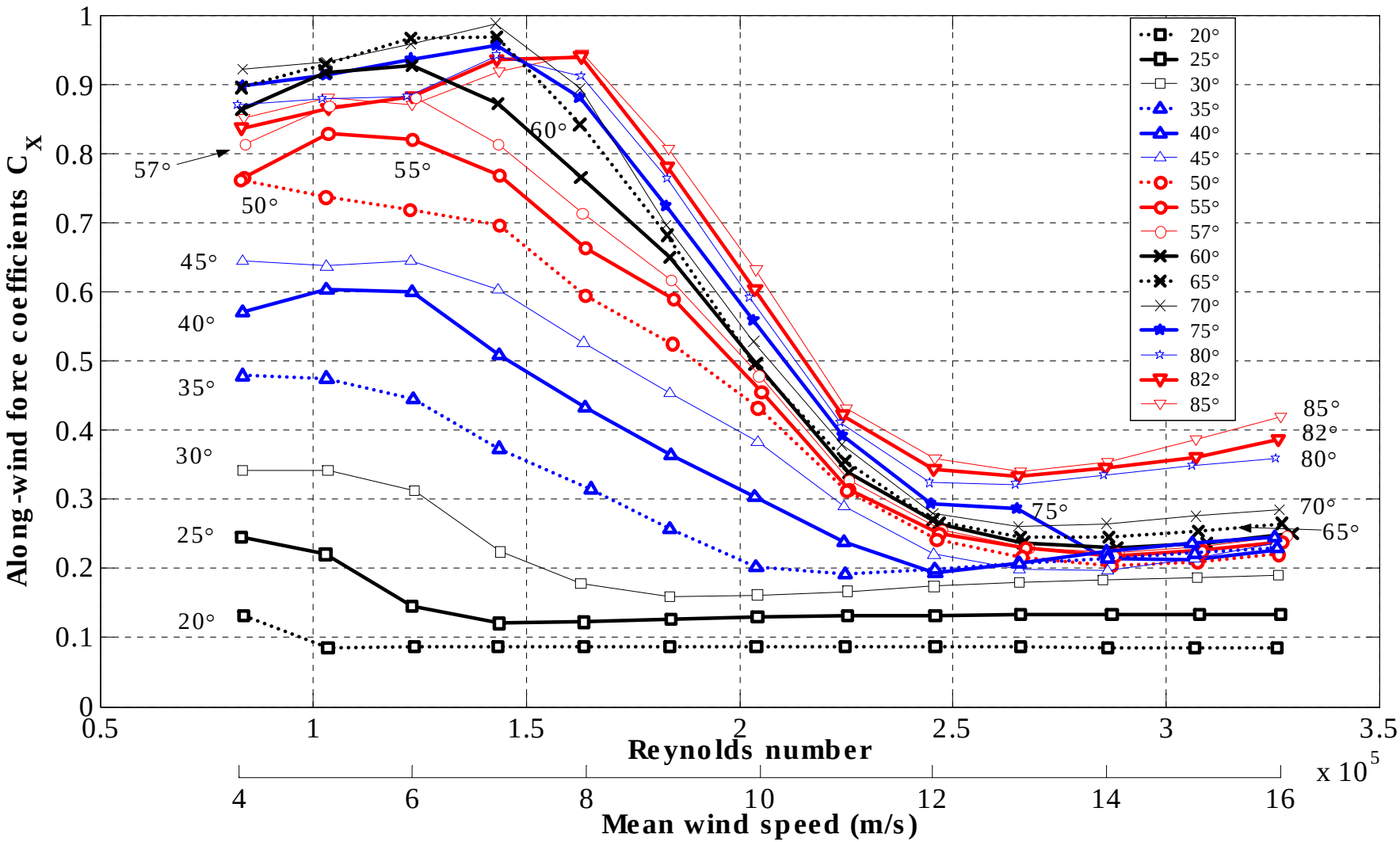

Across-wind, 2.5% turb.

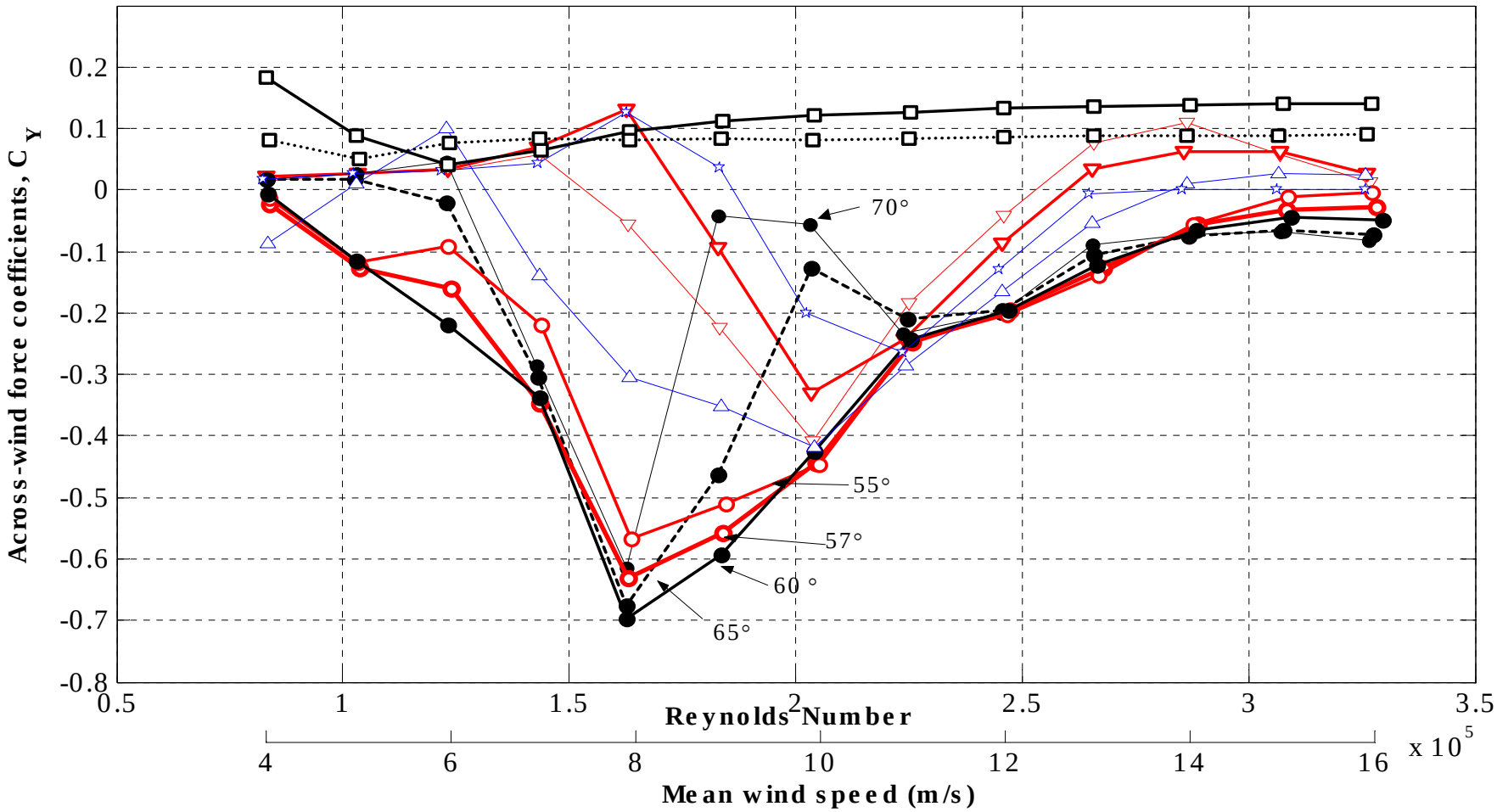

Follow on work (us and others)

Galloping

- 2 analytical model of dry cable galloping: damping needed to prevent vibrations.

  Macdonald & al; Carassale et al.

- Specifications for higher structural damping: Oresund Bridge (0.9% - ice), Busan-Goeje Bridge (1.2%).
- Field observations (Matsumoto).

High reduced velocity vortex shedding

- predictions of the observed vibrations during dynamic tests based on data on a stationary model (Jakobsen et al.)

Quasi-steady model:
Macdonald & Larose

Aerodynamic damping of inclined cable

$$\zeta_a = \frac{\mu \mathrm{Re}}{4m\omega_n}\cos\alpha\left\{\cos\alpha\left[C_D\left(2\sin\phi + \frac{\tan^2\alpha}{\sin\phi}\right) + \frac{\partial C_D}{\partial \mathrm{Re}}\mathrm{Re}\sin\phi + \frac{\partial C_D}{\partial\phi}\cos\phi\right]\right.$$
$$\left.\pm\sin\alpha\left[C_L\left(2\sin\phi - \frac{1}{\sin\phi}\right) + \frac{\partial C_L}{\partial \mathrm{Re}}\mathrm{Re}\sin\phi + \frac{\partial C_L}{\partial\phi}\cos\phi\right]\right\}.$$

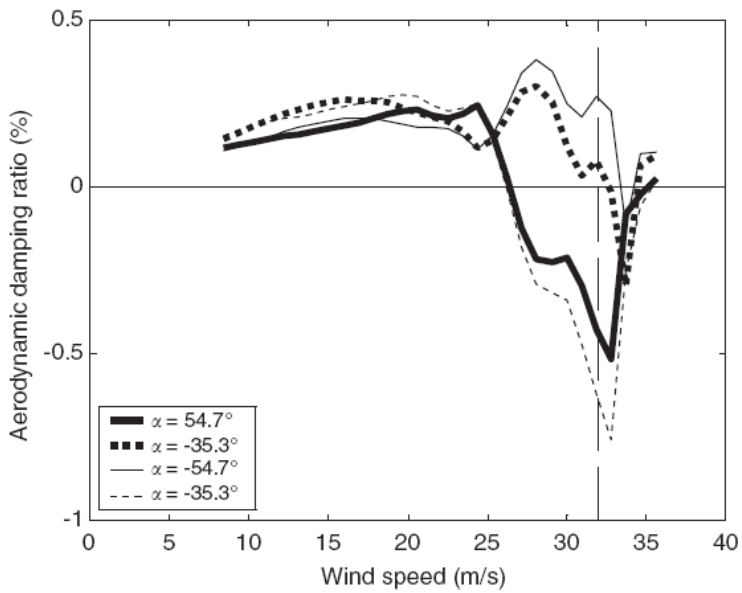

What is left to be done?

- Influence of motion?
  - Variations of pressure distribution (thus exciting force) along the length of the cable in motion in a moving fluid.
  - Phase relationship between the exciting force and the motion of the cable
- Verification of the analytical models?

Conclusions

- Reynolds number effects are likely at the source of some of the dynamic excitation of inclined stay cable
- Confirmation for inclined and yawed stay cables:
  - can gallop in the critical Re range;
  - vortex shedding excitation can occur at high wind speed.
- Quasi-steady models can explained some of the vibrations.
- Need further experiments to understand the effect of the motion on the exciting forces to design mitigating devices.

NRC·CNRC

NRCaerospace.com

Questions?