REMOVABLE SEAT

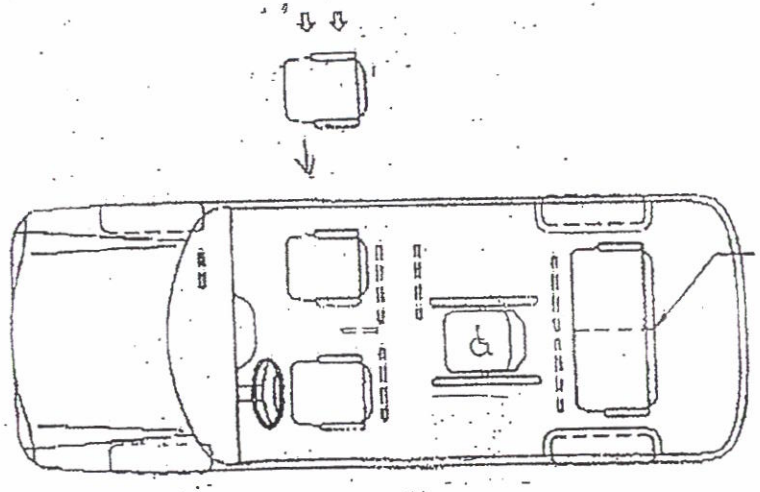

FLOOR PLAN AAA

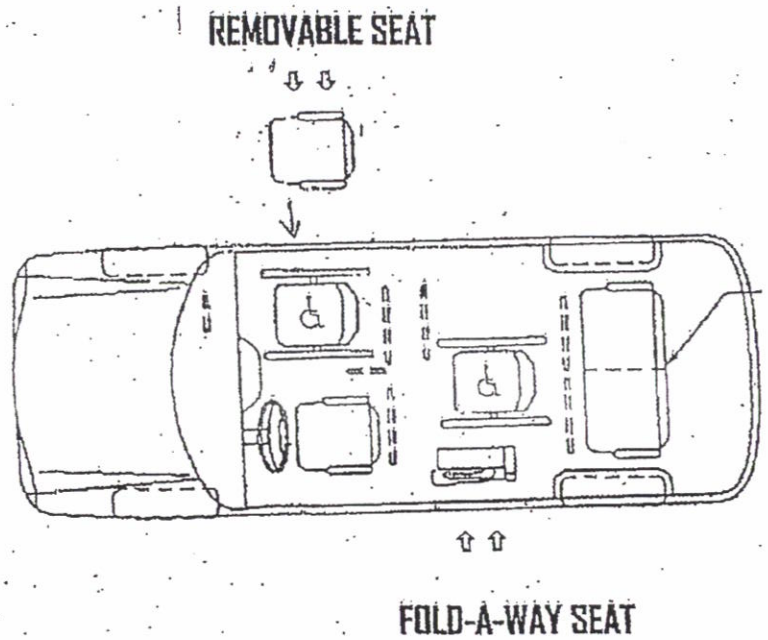

FLOOR PLAN BBB

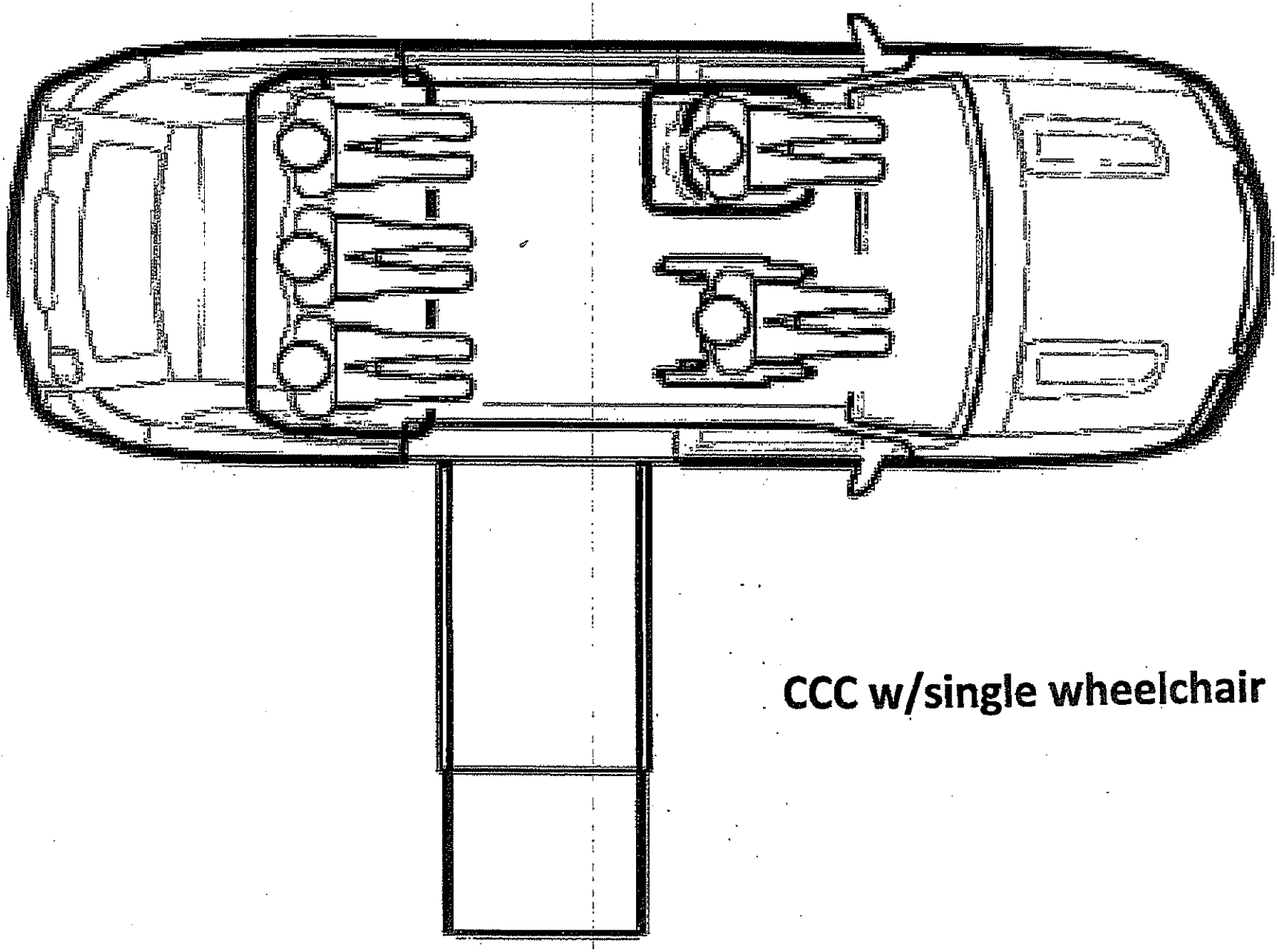

CCC w/single wheelchair

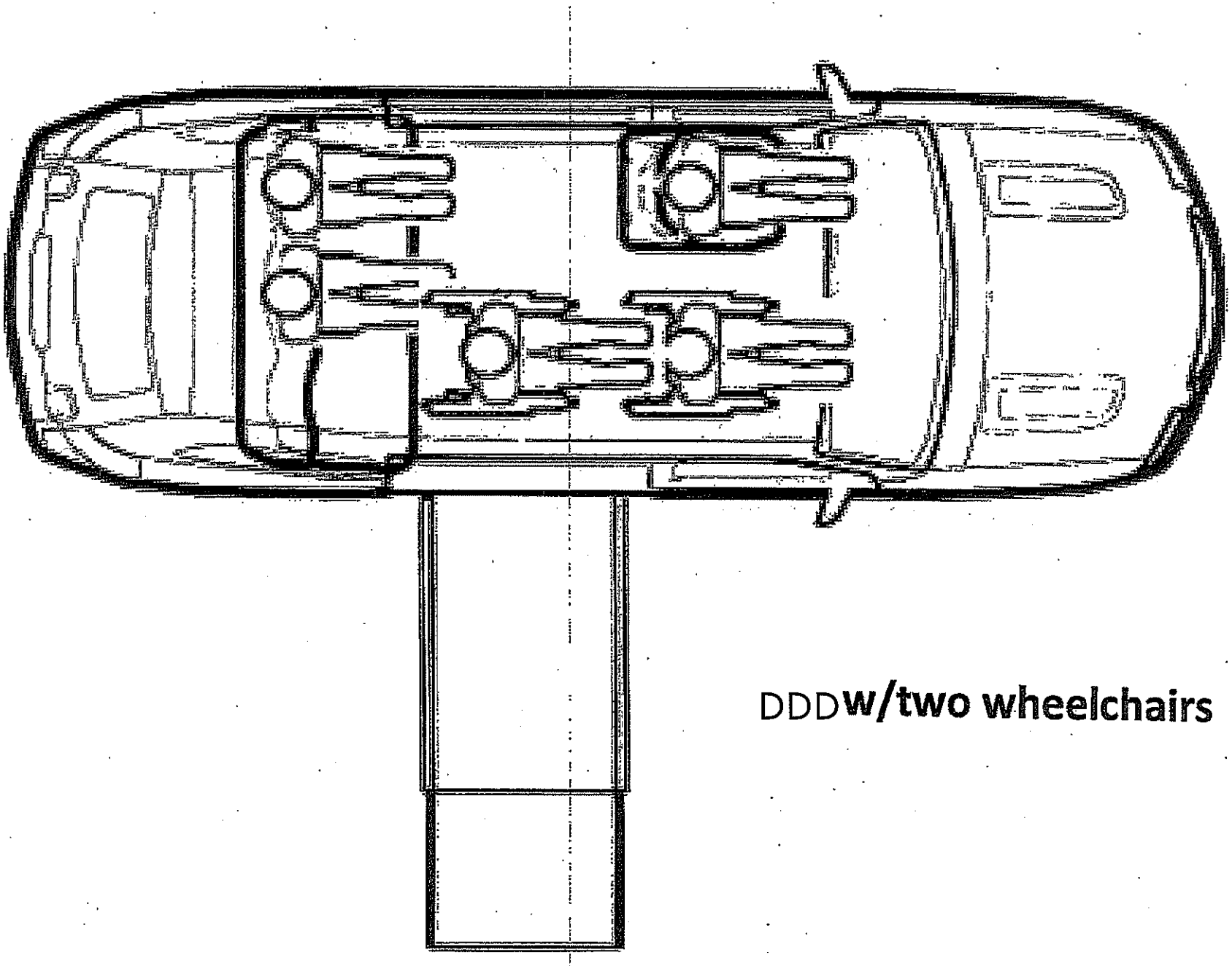

DDDw/two wheelchairs