EFFECTIVE: 06-27-2013

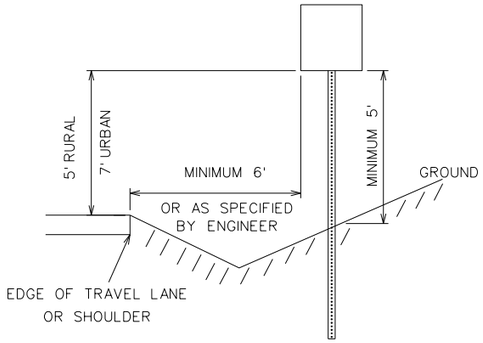

MOUNTING HEIGHT DETAIL

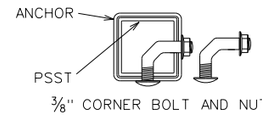

3/8" CORNER BOLT AND NUT

ANCHOR BOLT DETAIL FOR 2" PSST

MINIMUM 1 CORNER BOLT REQUIRED

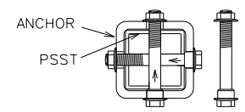

3/8" x 3.5" SHOULDER BOLT AND NUT

ANCHOR BOLT DETAIL FOR 2.5" PSST

2 SHOULDER BOLTS REQUIRED
INSTALLED PERPENDICULAR TO EACH OTHER

ANCHOR BOLT DETAIL

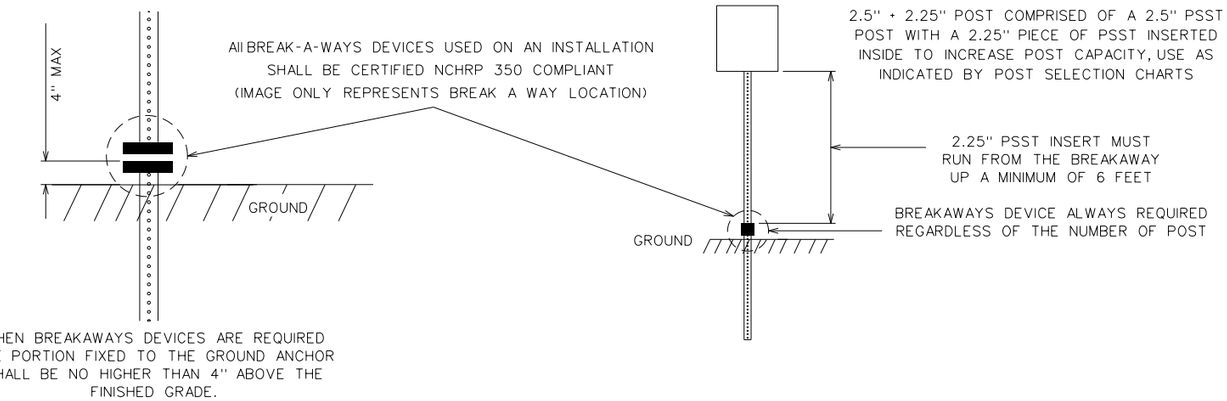

WHEN BREAKAWAYS DEVICES ARE REQUIRED THE PORTION FIXED TO THE GROUND ANCHOR SHALL BE NO HIGHER THAN 4" ABOVE THE FINISHED GRADE.

BREAKAWAYS DETAIL
2.5" + 2.25" POST DETAIL

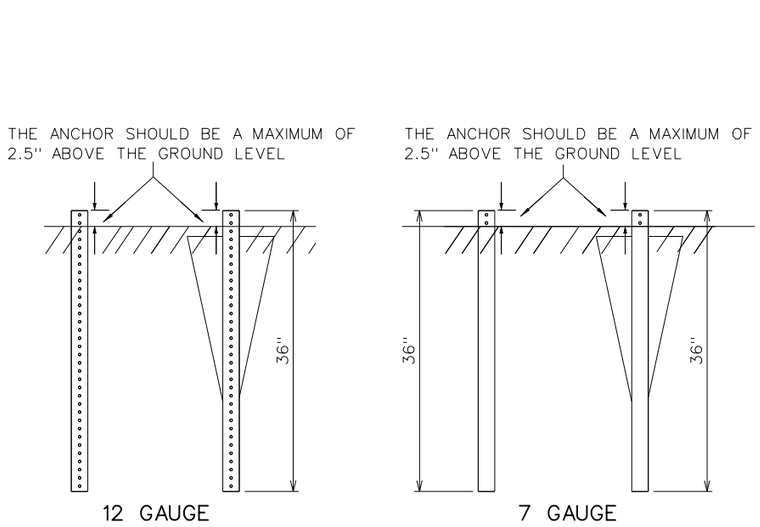

ANCHOR INSTALLATION DETAIL

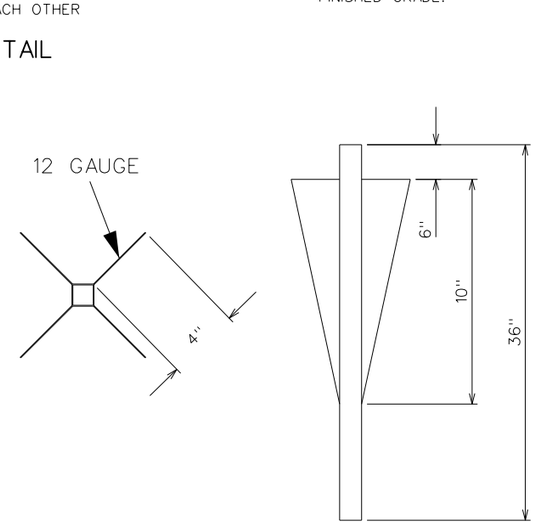

OMNI-DIRECTIONAL ANCHOR DETAIL
FOR BOTH 12 AND 7 GAUGE

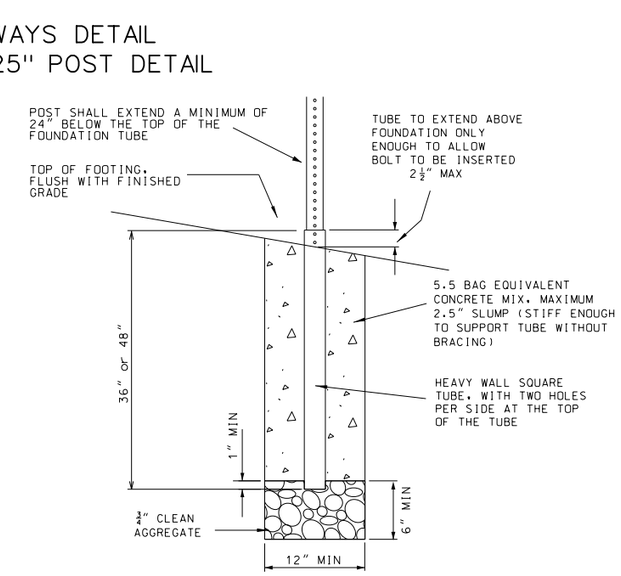

CONCRETE FOOTING DETAIL

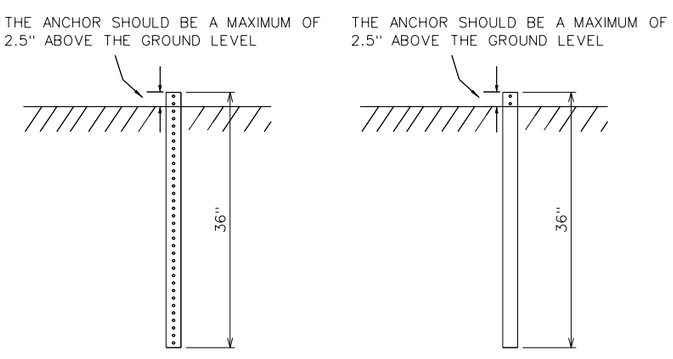

ANCHOR INSTALLATION DETAIL

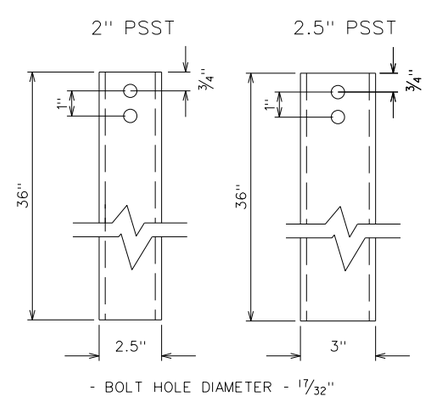

- BOLT HOLE DIAMETER - 17/32"
- 2 PER SIGN ON ALL 4 SIDES

7 GAUGE ANCHOR FABRICATION DETAIL

POSTS - 12 GAUGE - 2" x 2"
- 12 GAUGE - 2.5" x 2.5"

(THE NUMBER AND SIZE OF POST TO BE DETERMINED USING POST SELECTION TABLES)

ANCHORS - 12 GAUGE - 2.25" X 2.25" X 36" - 2" POST
- 7 GAUGE - 2.5" x 2.5" x 36" O.D. - 2" POST
- 7 GAUGE - 3" x 3" x 36" O.D. - 2.5" POST

BREAK A WAY - USE IS DEPENDENT ON POST APPLICATION AND INDICATED IN POST TABLES
DEVICE CHOSEN MUST BE NCHRP 350 COMPLIANT

GALVANIZATION - ALL PSST POSTS, ANCHORS AND BREAKAWAY CASTINGS SHALL BE GALVANIZED AFTER FABRICATION PER MoDOT STANDARD SPECIFICATIONS

SPECIAL SHEET
PERFORATED SQUARE STEEL TUBE (PSST)

SHEET X OF X

"THIS MEDIA SHOULD NOT BE CONSIDERED A CERTIFIED DOCUMENT."

DATE PREPARED	
6/27/2013	
ROUTE	STATE MO
DISTRICT	SHEET NO.
COUNTY	
JOB NO.	
CONTRACT ID.	
PROJECT NO.	
BRIDGE NO.	

DESCRIPTION	DATE

MISSOURI HIGHWAYS AND TRANSPORTATION COMMISSION
105 WEST CAPITOL
JEFFERSON CITY, MO 65102
1-888-ASK-MODOT (1-888-275-6636)

IF A SEAL IS PRESENT ON THIS SHEET IT HAS BEEN ELECTRONICALLY SEALED AND DATED.

EFFECTIVE: 06-27-2013

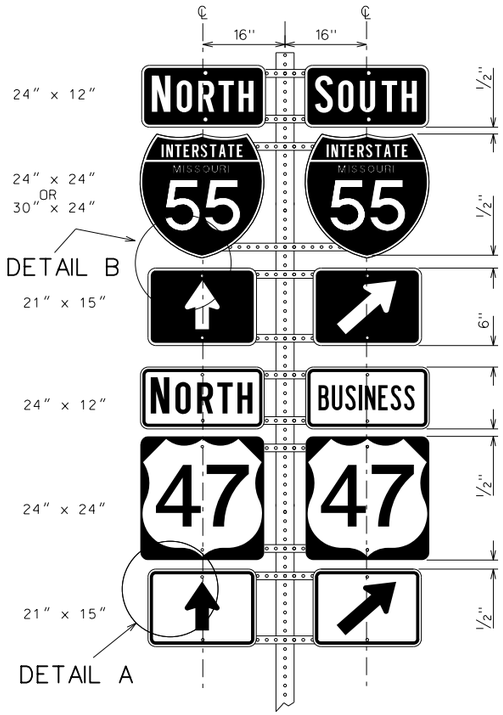

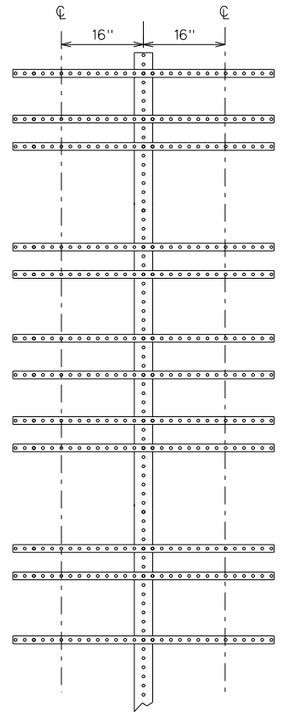

STANDARD BACKING BAR LAYOUT

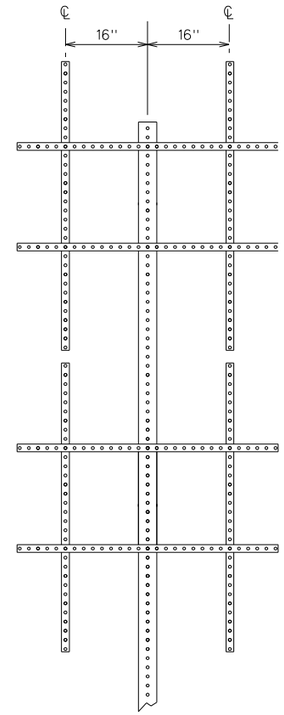

OPTIONAL BACKING BAR LAYOUT

JUNCTION ASSEMBLY DETAIL

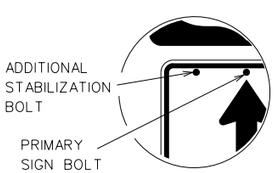

DETAIL A

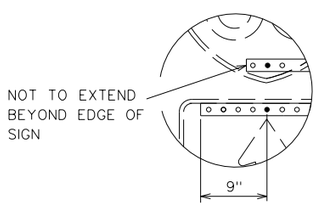

DETAIL B

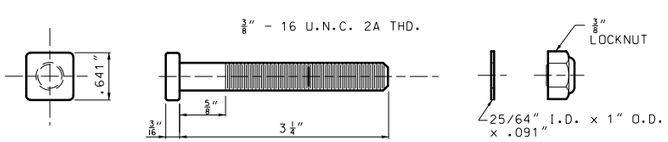

NOTE:
SQUARE BOLT HEAD SHOWN MAY BE REPLACED WITH RECTANGULAR BOLT HEAD WITH THE NARROW DIMENSION EQUAL TO .641".

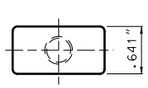

BOLT - 1 3/4 x 3/8" ALUMINUM
BOLT - 3 1/4 x 3/8" ALUMINUM
HEX LOCKNUT - 3/8" ALUMINUM
WASHER - ALUMINUM

T-BOLT DETAIL

NOTES:
- ALUMINUM BOLTS SHALL BE ASTM B 211, 2024-T4 OR 6061-T6
- ALUMINUM FLAT WASHERS SHALL BE ASTM B 209, ALCLAD 2024-T4 OR 2024-T4
- ALUMINUM LOCK NUTS (NYLON INSERT) SHALL BE ASTM B 211 OR 2017-T4

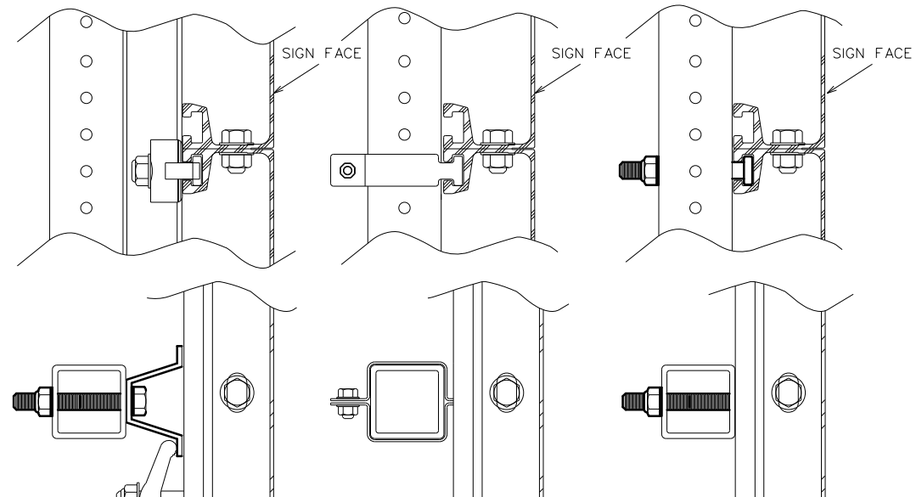

EXTRUDED PANEL MOUNTING DETAIL

NOTES: SEE 903.03 IN MISSOURI STANDARD PLANS FOR POST CLIP DETAILS AND PATTERNS

PSST CLAMP USE SHALL BE ON APPROVED LIST

NOTES:

SIGN DIMENSIONS - 1ST DIMENSION - WIDTH OF PLATE
2ND DIMENSION - HEIGHT OF PLATE

ALL SIGNS TO BE INSTALLED ALONG VERTICAL CENTERLINES

SINGLE ROUTE ASSEMBLY SHOULD BE MOUNTED ABOVE THE SIDE BY SIDE ASSEMBLIES ALONG CENTERLINE OF POST IN THREE ASSEMBLY CONFIGURATIONS

WHEN USING OPTIONAL BACKING BAR LAYOUT, VERTICAL BARS SHALL BE MOUNTED BEHIND HORIZONTAL BARS

THE END OF THE HORIZONTAL BACKING BARS SHALL EXTEND OF 9 INCHES PAST THE SIGN BOLT, BUT SHALL NOT EXTEND PAST THE EDGE OF THE SIGN (DETAIL B)

NOMINAL VERTICAL SPACING INDICATED BETWEEN SIGNS TO BE ACHIEVED BY USING THE CLOSEST AVAILABLE HOLES IN PSST

FOR SIGNS INSTALLED ON TWO PARALLEL HORIZONTAL BACKING BARS, ONE ADDITIONAL BOLT SHALL BE ADDED TO THE LEFT SIGN TO KEEP ASSEMBLY SQUARE (DETAIL A)

BACKING BARS SHALL MEET MISSOURI STANDARD PLANS OR APPROVED PRODUCTS LIST

SPECIAL SHEET
PERFORATED SQUARE STEEL TUBE (PSST)

SHEET X OF X

"THIS MEDIA SHOULD NOT BE CONSIDERED A CERTIFIED DOCUMENT."

DATE PREPARED	
6/27/2013	
ROUTE	STATE MO
DISTRICT	SHEET NO.
COUNTY	
JOB NO.	
CONTRACT ID.	
PROJECT NO.	
BRIDGE NO.	

DATE	DESCRIPTION

MISSOURI HIGHWAYS AND TRANSPORTATION COMMISSION

105 WEST CAPITOL
JEFFERSON CITY, MO 65102
1-888-ASK-MODOT (1-888-275-6636)

IF A SEAL IS PRESENT ON THIS SHEET IT HAS BEEN ELECTRONICALLY SEALED AND DATED.