# MISSOURI
# HIGHWAYS and TRANSPORTATION COMMISSION

**JEFFERSON CITY, MISSOURI**

SUPPLEMENTAL PLANS TO JULY 2009 MISSOURI STANDARD PLANS FOR HIGHWAY CONSTRUCTION

**EFFECTIVE May 1, 2012**

EFFECTIVE: 05/01/2012

# MISSOURI HIGHWAYS AND TRANSPORTATION COMMISSION

## MISSOURI STANDARD PLANS FOR HIGHWAY CONSTRUCTION

### TABLE OF CONTENTS


| STANDARD NO. | DRAWING TITLE | NO. OF SHEETS | EFFECTIVE DATE |
|---|---|---|---|
| 203.00E | EXCAVATION AND EMBANKMENT - TYPICAL DETAILS | 1 | 08/01/1998 |
| 203.02F | UNDERGRADING - TYPICAL DETAILS | 2 | 01/01/2004 |
| 203.10D | TABULATED EARTHWORK AND SECTION DATA | 1 | 02/01/2009 |
| 203.20F | SUPERELEVATION SPIRALS AND WIDENING (UNDIVIDED HIGHWAY) | 5 | 04/01/2002 |
| 203.21J | SUPERELEVATION SPIRALS AND WIDENING (DIVIDED HIGHWAY) | 5 | 04/01/2002 |
| 203.35A | MAILBOX TURNOUTS | 1 | 08/01/1981 |
| 203.40G | TYPICAL DETAILS ON AND OFF RAMP | 2 | 10/01/2007 |
| 203.41F | TYPICAL DETAILS ON AND OFF RAMPS (ROADWAY WITH 6:1 FORESLOPE) | 2 | 01/01/1995 |
| 203.50M | TYPICAL MEDIAN OPENINGS (DIVIDED HIGHWAYS) | 2 | 07/01/2004 |
| 203.61A | DRIVEWAY - TYPE I | 1 | 07/01/2004 |
| 203.62C | DRIVEWAY - TYPE II | 2 | 07/01/2004 |
| 203.63A | DRIVEWAY - TYPE III | 2 | 01/01/1992 |
| 203.64C | DRIVEWAY - TYPE IV | 2 | 07/01/2004 |
| 203.65A | DRIVEWAY - TYPE V | 1 | 10/01/1998 |
| 204.00D | EMBANKMENT CONTROL - MEASURING DEVICES | 1 | 04/01/1983 |
| 204.30 | PORE PRESSURE MEASUREMENT DEVICES | 1 | 03/01/1996 |
| 401.00A | TYPE A2 AND A3 SHOULDERS | 2 | 04/01/2009 |
| 413.20 | SCRUB SEAL BROOM CONFIGURATION | 1 | 07/01/2004 |
| 502.05M | CONCRETE PAVEMENT AND BASE APPURTENANCES FOR 15 FT. JOINT SPACING * | 4 | 06/01/2010 |
| 502.10K | DOWEL SUPPORTING UNITS * | 2 | 06/01/2010 |
| 504.00H | CONCRETE APPROACH PAVEMENT | 3 | 08/01/2007 |
| 602.00D | RIGHT-OF-WAY AND DRAIN MARKERS | 2 | 01/01/2003 |
| 604.05D | PIPE CULVERT HEADWALLS - TYPE S | 2 | 08/01/2006 |
| 604.10E | PIPE CULVERT HEADWALL - ENERGY DISSIPATOR FOR 18" CONCRETE PIPE | 1 | 07/01/2001 |
| 604.11E | PIPE CULVERT HEADWALL - ENERGY DISSIPATOR FOR 24" CONCRETE PIPE | 1 | 07/01/2001 |
| 604.12E | PIPE CULVERT HEADWALL - ENERGY DISSIPATOR FOR 30" CONCRETE PIPE | 1 | 07/01/2001 |
| 604.13E | PIPE CULVERT HEADWALL - ENERGY DISSIPATOR FOR 36" CONCRETE PIPE | 1 | 07/01/2001 |
| 604.14E | PIPE CULVERT HEADWALL - ENERGY DISSIPATOR FOR 42" CONCRETE PIPE | 1 | 07/01/2001 |
| 604.15E | PIPE CULVERT HEADWALL - ENERGY DISSIPATOR FOR 48" CONCRETE PIPE | 1 | 07/01/2001 |
| 604.29C | DROP INLET - TYPE X | 2 | 04/01/1983 |
| 604.30F | CONCRETE MANHOLES | 2 | 04/01/1983 |
| 604.40F | PIPE COLLARS | 2 | 10/01/2000 |
| 604.70 | SLOTTED DRAIN | 2 | 03/01/1994 |
| 605.10H | PAVEMENT UNDERDRAINAGE | 3 | 12/01/2007 |
| 606.00AU | GUARDRAIL * | 17 | 02/01/2012 |
| 606.01E | BULLNOSE GUARDRAIL SYSTEM | 7 | 10/01/2003 |
| 606.22S | BRIDGE ANCHOR SECTION - SAFETY BARRIER CURB ON BRIDGE | 5 | 08/01/2007 |
| 606.23H | BRIDGE ANCHOR SECTION (THRIE BEAM RAIL ON BRIDGE) | 5 | 04/01/2005 |
| 606.30E | TERMINAL SECTION | 1 | 06/01/2006 |
| 606.40D | ONE-STRAND ACCESS RESTRAINT CABLE | 2 | 07/01/2004 |
| 606.41J | THREE-STRAND GUARD CABLE | 7 | 01/01/2005 |
| 607.10V | CHAIN-LINK FENCE | 1 | 02/01/2007 |
| 607.11H | CHAIN-LINK FENCE FOR RETAINING WALLS | 1 | 06/01/2009 |
| 607.20F | WOVEN WIRE FENCE | 2 | 10/01/1998 |

| STANDARD NO. | DRAWING TITLE | NO. OF SHEETS | EFFECTIVE DATE |
|---|---|---|---|
| 608.00H | PAVED APPROACHES | 2 | 10/01/2009 |
| 608.10N | CONCRETE SIDEWALK AND CURB RAMPS * | 4 | 10/01/2009 |
| 608.20D | CONCRETE STAIRS | 2 | 10/01/1992 |
| 608.30A | CONCRETE MEDIAN STRIP * | 1 | 02/01/2011 |
| 609.00P | CONCRETE CURB, CURB AND GUTTER AND GUTTER * | 2 | 08/01/2008 |
| 609.15C | PAVED DITCHES | 1 | 03/01/1993 |
| 609.40P | DRAIN BASIN, SHOULDER PAVING AND FILL SLOPES AT BRIDGE ENDS | 2 | 02/01/2009 |
| 609.60C | ROCK DITCH LINER | 1 | 03/01/1993 |
| 609.70C | ROCK LINING FOR CULVERT OUTLET | 1 | 10/01/1981 |
| 611.60Q | CONCRETE SLOPE PROTECTION | 1 | 01/01/2005 |
| 612.20D | SAND FILLED IMPACT ATTENUATORS | 1 | 08/01/2008 |
| 613.00P | PAVEMENT REPAIR * | 3 | 06/01/2010 |
| 614.10T | GRATES AND BEARING PLATES | 1 | 12/01/2005 |
| 614.11C | CURVED VANE GRATE AND FRAME * | 1 | 06/01/2010 |
| 614.30E | MANHOLE FRAMES AND COVERS | 2 | 07/01/1996 |
| 616.10AP | TEMPORARY TRAFFIC CONTROL DEVICES * | 8 | 05/01/2012 |
| 617.10G | PERMANENT CONCRETE TRAFFIC BARRIER * | 7 | 02/01/2012 |
| 617.20C | TEMPORARY CONCRETE TRAFFIC BARRIER | 6 | 06/01/2008 |
| 619.10G | PAVEMENT EDGE TREATMENT * | 1 | 05/01/2012 |
| 620.00J | PAVEMENT MARKING * | 5 | 12/01/2009 |
| 620.10C | TEMPORARY PAVEMENT MARKING * | 4 | 07/01/2011 |
| 620.20 | SNOWPLOWABLE RAISED PAVEMENT MARKERS | 4 | 01/01/2003 |
| 625.00 | HOLE PATTERN FOR PAVEMENT SLAB STABILIZATION | 1 | 10/01/1998 |
| 626.00H | RUMBLE STRIPS | 2 | 04/01/2009 |
| 702.02F | CAST-IN-PLACE CONCRETE PILES (APPROVED TYPES) | 1 | 07/01/2004 |


* REVISED OR ADDED SINCE OCTOBER 2009



IF A SEAL IS PRESENT ON THIS SHEET IT HAS BEEN ELECTRONICALLY SEALED AND DATED.

EFFECTIVE: 05/01/2012

# MISSOURI HIGHWAYS AND TRANSPORTATION COMMISSION

## MISSOURI STANDARD PLANS FOR HIGHWAY CONSTRUCTION

### TABLE OF CONTENTS


| STANDARD NO. | DRAWING TITLE | NO. OF SHEETS | EFFECTIVE DATE |
|---|---|---|---|
| 703.10H | CONCRETE SINGLE BOX STRUCTURE - STRAIGHT WINGS (SQUARE) * | 3 | 04/01/2011 |
| 703.11H | CONCRETE SINGLE BOX STRUCTURE - FLARED WINGS (SQUARE) * | 3 | 04/01/2011 |
| 703.12H | CONCRETE SINGLE BOX STRUCTURE - STRAIGHT WINGS (LEFT ADVANCE) * | 3 | 04/01/2011 |
| 703.13H | CONCRETE SINGLE BOX STRUCTURE - FLARED WINGS (LEFT ADVANCE) * | 3 | 04/01/2011 |
| 703.14H | CONCRETE SINGLE BOX STRUCTURE - STRAIGHT WINGS (RIGHT ADVANCE) * | 3 | 04/01/2011 |
| 703.15D | CONCRETE SINGLE BOX STRUCTURE - FLARED WINGS (RIGHT ADVANCE) * | 3 | 04/01/2011 |
| 703.16 | CONCRETE SINGLE BOX STRUCTURE - CUT SECTION * | 1 | 04/01/2011 |
| 703.17 | CONCRETE SINGLE BOX STRUCTURE - MEMBER SIZES AND REINFORCEMENT * | 14 | 04/01/2011 |
| 703.37C | CONCRETE BOX STRUCTURE - EXTERIOR WING REINFORCEMENT * | 2 | 04/01/2011 |
| 703.38A | CONCRETE BOX STRUCTURE - CUTTING DETAILS | 2 | 10/01/2009 |
| 703.40H | CONCRETE DOUBLE BOX STRUCTURE - STRAIGHT WINGS (SQUARE) * | 3 | 10/01/2011 |
| 703.41H | CONCRETE DOUBLE BOX STRUCTURE - FLARED WINGS (SQUARE) * | 3 | 10/01/2011 |
| 703.42H | CONCRETE DOUBLE BOX STRUCTURE - STRAIGHT WINGS (LEFT ADVANCE) * | 3 | 10/01/2011 |
| 703.43H | CONCRETE DOUBLE BOX STRUCTURE - FLARED WINGS (LEFT ADVANCE) * | 3 | 10/01/2011 |
| 703.44H | CONCRETE DOUBLE BOX STRUCTURE - STRAIGHT WINGS (RIGHT ADVANCE) * | 3 | 10/01/2011 |
| 703.45C | CONCRETE DOUBLE BOX STRUCTURE - FLARED WINGS (RIGHT ADVANCE) * | 3 | 10/01/2011 |
| 703.46 | CONCRETE BOX STRUCTURE - CUT SECTION * | 1 | 10/01/2011 |
| 703.47 | CONCRETE BOX STRUCTURE - MEMBER SIZES AND REINFORCEMENT * | 27 | 10/01/2011 |
| 703.60E | CONCRETE BOX STRUCTURE - PIPE INLET | 1 | 07/01/2001 |
| 703.80H | CONCRETE TRIPLE BOX CULVERT - STRAIGHT WINGS (SQUARE) * | 3 | 12/01/2011 |
| 703.81H | CONCRETE TRIPLE BOX CULVERT - FLARED WINGS (SQUARE) * | 3 | 12/01/2011 |
| 703.82H | CONCRETE TRIPLE BOX CULVERT - STRAIGHT WINGS (LEFT ADVANCE) * | 3 | 12/01/2011 |
| 703.83H | CONCRETE TRIPLE BOX CULVERT - FLARED WINGS (LEFT ADVANCE) * | 3 | 12/01/2011 |
| 703.84H | CONCRETE TRIPLE BOX CULVERT - STRAIGHT WINGS (RIGHT ADVANCE) * | 3 | 12/01/2011 |
| 703.85H | CONCRETE TRIPLE BOX CULVERT - FLARED WINGS (RIGHT ADVANCE) * | 3 | 12/01/2011 |
| 703.86H | CONCRETE TRIPLE BOX CULVERT - CUT SECTIONS * | 1 | 12/01/2011 |
| 703.87H | CONCRETE TRIPLE BOX CULVERT - MEMBER SIZES AND REINFORCEMENT * | 27 | 12/01/2011 |
| 706.35H | BAR SUPPORTS FOR CONCRETE REINFORCEMENT | 1 | 07/01/2004 |
| 712.40J | STEEL DAMS AT EXPANSION DEVICES | 1 | 07/01/2004 |
| 725.00C | CORRUGATED METAL PIPE INSTALLATION METHODS * | 5 | 04/01/2011 |
| 725.31C | METAL CURTAIN WALL AND METAL INLETS | 1 | 07/01/2004 |
| 726.30H | RIGID CULVERT INSTALLATION METHODS * | 2 | 02/01/2012 |
| 730.00D | CORRUGATED POLYETHYLENE AND POLYVINYL CHLORIDE PIPE INSTALLATION METHODS * | 1 | 04/01/2011 |
| 731.00T | PRECAST MANHOLES | 2 | 10/01/1998 |
| 731.10R | PRECAST DROP INLET | 8 | 12/01/2005 |
| 732.00P | FLARED END SECTION | 2 | 02/01/2009 |
| 732.05C | BEVELED PIPE END TREATMENT | 2 | 07/01/2004 |
| 732.10G | SAFETY SLOPE END SECTION | 3 | 08/01/2009 |
| 806.10H | TEMPORARY EROSION CONTROL MEASURES | 7 | 04/01/2009 |
| 808.00 | TYPICAL PLANTING ILLUSTRATIONS | 3 | 07/01/2004 |
| 901.00Z | HIGHWAY LIGHTING - POLES, FOUNDATIONS & APPURTENANCES FOR 30' M.H. * | 4 | 02/01/2011 |
| 901.01AG | HIGHWAY LIGHTING - POLES, FOUNDATIONS & APPURTENANCES FOR 45' M.H. * | 6 | 02/01/2011 |
| 901.02B | HIGHWAY LIGHTING - CABLE, CONDUIT AND TRENCHING | 1 | 04/01/2002 |
| 901.30F | HIGHWAY LIGHTING - BASE MOUNTED CONTROL STATION | 2 | 04/01/2005 |
| | | | |

| STANDARD NO. | DRAWING TITLE | NO. OF SHEETS | EFFECTIVE DATE |
|---|---|---|---|
| 901.80D | HIGHWAY LIGHTING - POWER SUPPLY ASSEMBLY - SECONDARY SERVICE | 2 | 04/01/2002 |
| 901.85A | HIGHWAY LIGHTING SYMBOLS | 1 | 01/01/2003 |
| 902.00M | TRAFFIC SIGNALS - SIGNAL HEADS MOUNTING - LOUVERS | 2 | 04/01/2008 |
| 902.10Q | TRAFFIC SIGNALS - CONTROLLERS CONDUIT LOCATION | 1 | 04/01/2005 |
| 902.15K | TRAFFIC SIGNALS - POWER SUPPLY ASSEMBLY | 3 | 07/01/2004 |
| 902.20G | TRAFFIC SIGNALS - CONCRETE PULL BOXES * | 3 | 11/01/2010 |
| 902.21C | TRAFFIC SIGNALS - TELEPHONE INTERCONNECT | 1 | 03/01/1996 |
| 902.30P | TRAFFIC SIGNALS - POST BASES * | 2 | 02/01/2008 |
| 902.40Q | TRAFFIC SIGNALS - TUBULAR STEEL POSTS | 3 | 02/01/2008 |
| 902.50L | TRAFFIC SIGNALS - INDUCTION LOOP DETECTORS | 2 | 06/01/2009 |
| 902.70P | TRAFFIC SIGNALS - RIGID SPAN WIRE DETAILS | 2 | 02/01/2008 |
| 902.80J | TRAFFIC SIGNALS - RIDID SPAN WIRE DETAILS SYMBOLS | 1 | 02/01/2009 |
| 903.01H | SPECIAL SIGNING CHARACTERS | 1 | 07/01/2004 |
| 903.02AL | HIGHWAY SIGNING STRUCTURE SIGNS * | 19 | 02/01/2012 |
| 903.03BH | SIGN MOUNTING DETAILS * | 11 | 02/01/2012 |
| 903.04F | HIGHWAY SIGNING - WEIGH STATION * | 1 | 02/01/2012 |
| 903.05H | HIGHWAY SIGNING - TUBULAR SUPPORT STEEL - TYPE S, ONE TUBE | 2 | 04/01/2005 |
| 903.06H | HIGHWAY SIGNING - TUBULAR SUPPORT STEEL - TYPE S, TWO TUBE | 2 | 04/01/2005 |
| 903.07H | HIGHWAY SIGNING - TUBULAR SUPPORT STEEL - TYPE C | 2 | 04/01/2005 |
| 903.08G | HIGHWAY SIGNING - TUBULAR SUPPORT STEEL - TYPE B | 2 | 04/01/2005 |
| 903.10BB | OVERHEAD SIGN TRUSSES - ALUMINUM * | 6 | 10/01/2011 |
| 903.12Y | OVERHEAD SIGN TRUSSES-BUTTERFLY AND CANTILEVER-STRUCTURAL STEEL | 7 | 12/01/2008 |
| 903.60AA | OVERHEAD SIGN TRUSSES-STRUCTURAL STEEL * | 5 | 10/01/2011 |
| | | | |


* REVISED OR ADDED SINCE OCTOBER 2009



IF A SEAL IS PRESENT ON THIS SHEET IT HAS BEEN ELECTRONICALLY SEALED AND DATED.

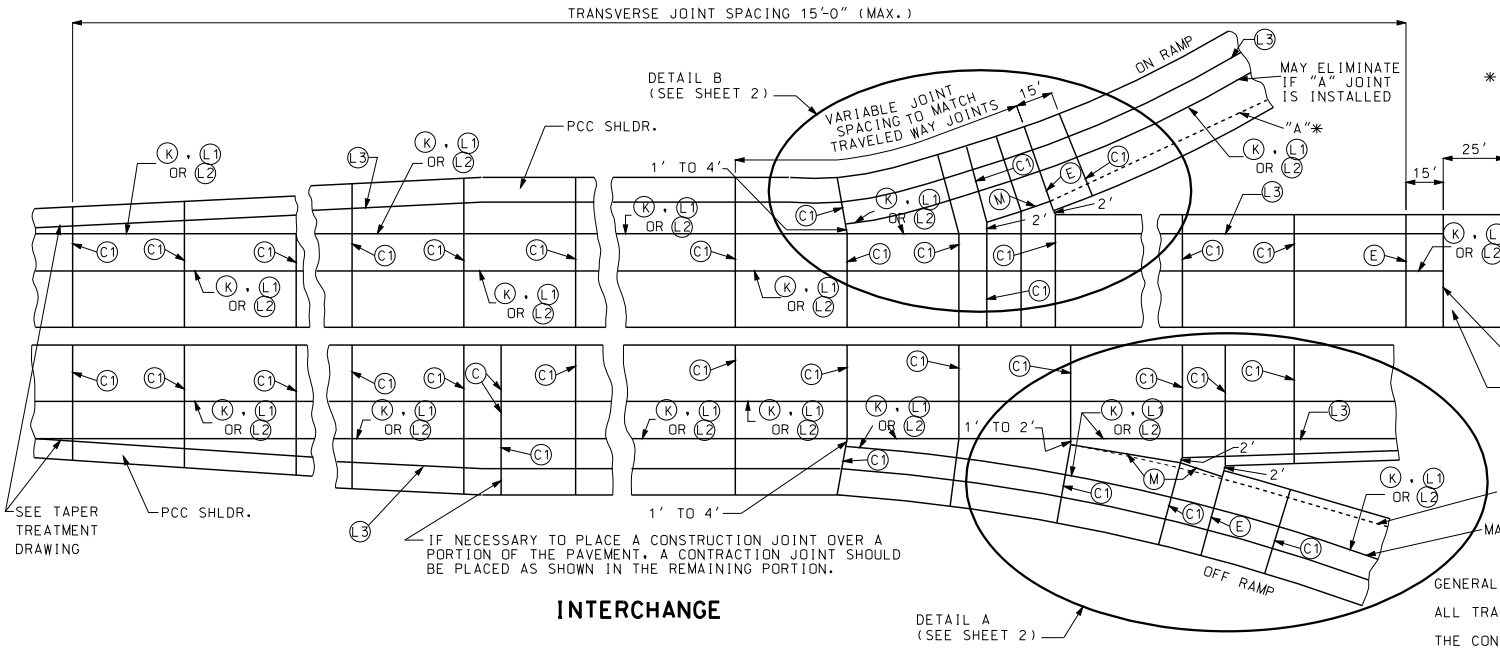


## INTERCHANGE

✳ AN OPTIONAL JOINT. IF CONSTRUCTED, USE (L3) JOINTS.

✳ PCC APPROACH PAVEMENT

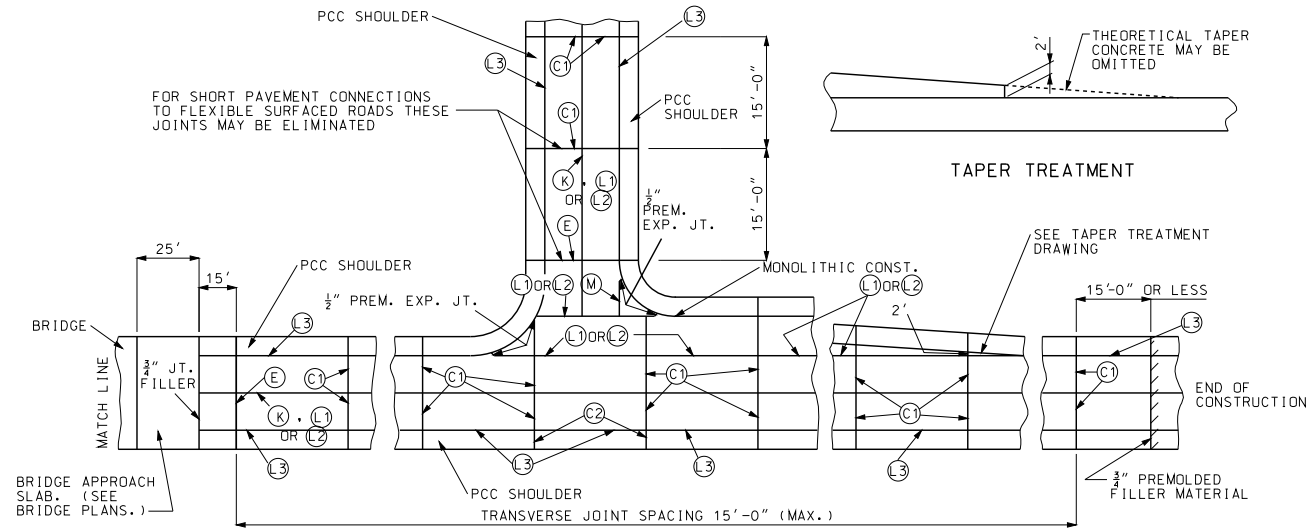


## NON-INTERCHANGE

GENERAL NOTES:

ALL TRANSVERSE JOINTS ON SHOULDERS SHALL BE (C2).

THE CONTRACTOR SHALL DETERMINE THE PAVING WIDTH.

(L3) SHALL BE USED BETWEEN PAVEMENT AND SHOULDER GREATER THAN 4'. THE INTERCHANGE WILL EXTEND FROM THE BEGINNING OF THE ACCELERATION/DECELERATION LANE TO THE GORE RETURN TAPER ON THE MAINLINE. THE INTERCHANGE WILL ALSO INCLUDE THE RAMPS UP TO THE BEGINNING OF THE RADIUS WITH THE ROAD INTERSECTING THE RAMP.

FOR JOINT DETAILS, SEE SHEETS NO. 3 & 4.

THE JOINT LAYOUT OF RAMPS IS TYPICAL FOR OUTER RAMPS OF CLOVERLEAF AND DIAMOND INTERCHANGES. SEE OTHER DRAWINGS FOR SPECIAL JOINT LAYOUTS.

JOINT SPACING SHOWN IS MAXIMUM AND IS TO BE REDUCED TO AVOID CONFLICT WITH ABUTTING STRUCTURES. JOINTS IN MULTI-LANE PAVEMENT ARE TO BE CONTINUOUS.

ALL SHOULDERS 4' OR LESS IN WIDTH SHALL BE CAST MONOLITHIC WITH THE ADJACENT LANE AND SHALL NOT HAVE A LONGITUDINAL JOINT OR TIE BARS.

MISSOURI HIGHWAYS AND TRANSPORTATION COMMISSION
105 WEST CAPITOL
JEFFERSON CITY, MO 65102
1-888-ASK-MODOT (1-888-275-6636)

STATE OF MISSOURI — KATHRYN PHILLIPS HARVEY — NUMBER PE-23751 — PROFESSIONAL ENGINEER — THIS SHEET HAS BEEN SIGNED, SEALED AND DATED ELECTRONICALLY.

# CONCRETE PAVEMENT AND BASE APPURTENANCES FOR 15' JOINT SPACING

DATE EFFECTIVE: 06/01/2010
DATE PREPARED: 10/18/2011

502.05M

SHEET NO. 1 OF 4

IF A SEAL IS PRESENT ON THIS SHEET IT HAS BEEN ELECTRONICALLY SEALED AND DATED.

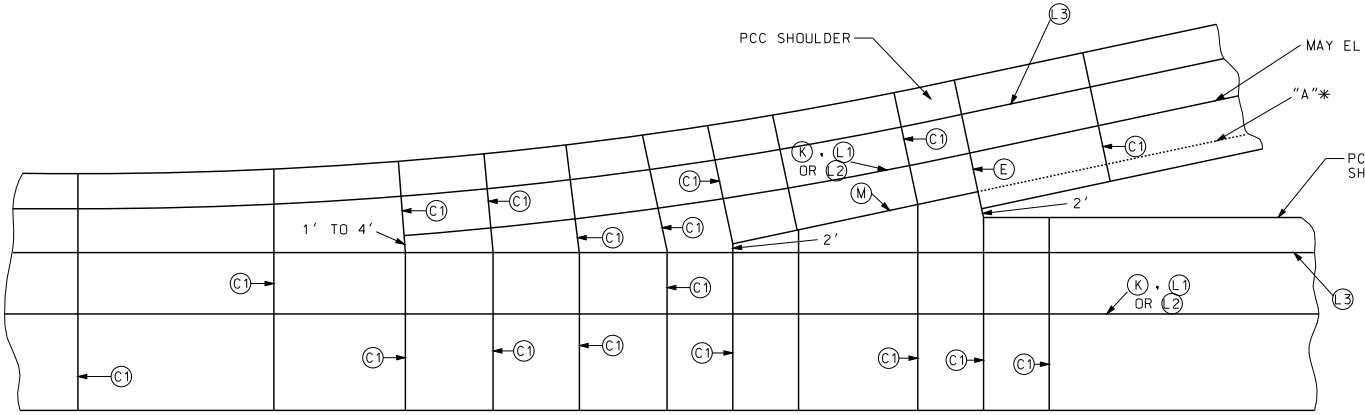


DETAIL B
(FROM SHEET 1 OF 4)

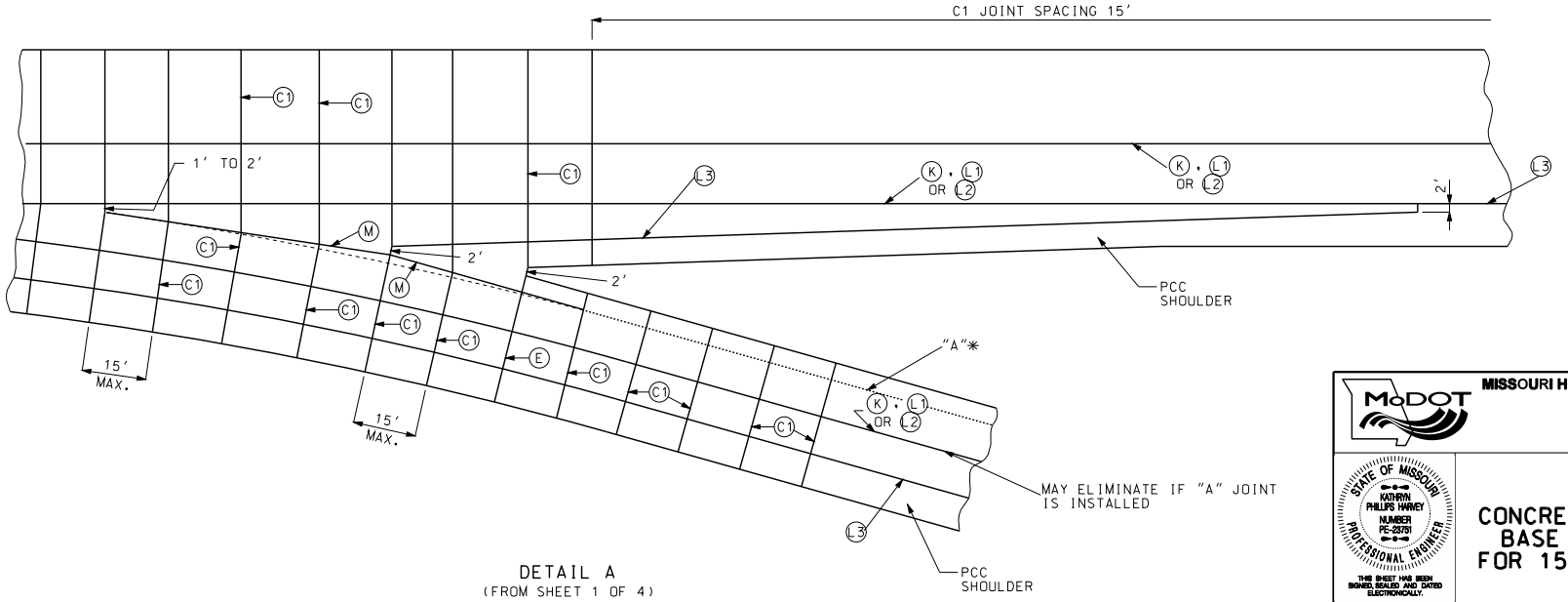


DETAIL A
(FROM SHEET 1 OF 4)

IF A SEAL IS PRESENT ON THIS SHEET IT HAS BEEN ELECTRONICALLY SEALED AND DATED.

MISSOURI HIGHWAYS AND TRANSPORTATION COMMISSION
105 WEST CAPITOL
JEFFERSON CITY, MO 65102
1-888-ASK-MODOT (1-888-275-6636)

STATE OF MISSOURI
KATHRYN PHILLIPS HARVEY
NUMBER PE-23751
PROFESSIONAL ENGINEER
THIS SHEET HAS BEEN SIGNED, SEALED AND DATED ELECTRONICALLY.

# CONCRETE PAVEMENT AND BASE APPURTENANCES FOR 15' JOINT SPACING

DATE EFFECTIVE: 06/01/2010
DATE PREPARED: 4/1/2010

502.05M

SHEET NO. 2 OF 4

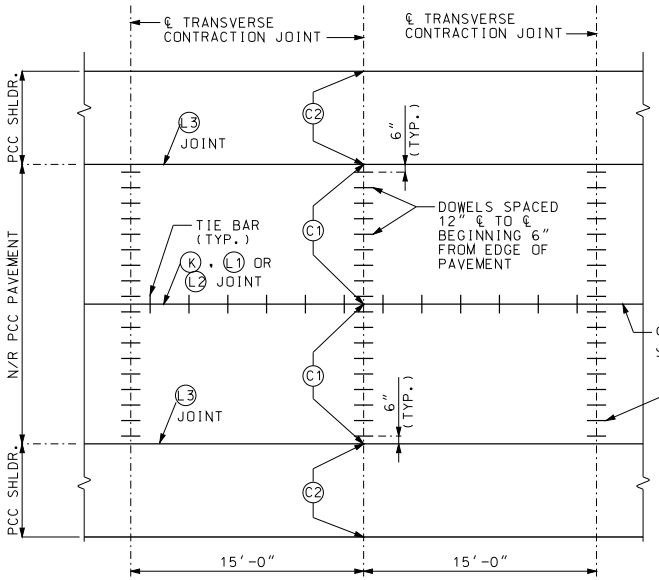


## JOINT PLAN AND SPACING FOR CONTRACTION JOINTS (1)

(1) LONGITUDINAL JOINT NOT REQUIRED AT INSIDE SHOULDER ON DIVIDED HIGHWAYS OR AT INSIDE SHOULDER OF RAMPS. FOR 4' OR LESS INSIDE SHOULDERS, DOWELS ARE REQUIRED FOR THE FIRST TWO FEET ADJACENT TO THE TRAVEL LANE.

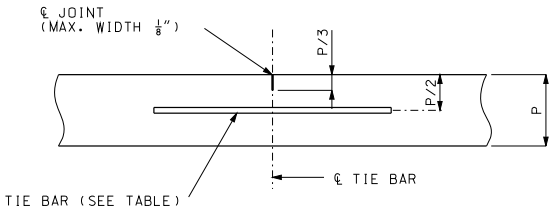


TIE BARS REQUIRED.

## LONGITUDINAL JOINT (L1)

| TIE BAR AND DOWEL TABLE | | | | |
|---|---|---|---|---|
| PCCP THICKNESS (P) | DOWEL SIZE | TIE BAR SIZE | DOWEL SPACING | TIE BAR SPACING |
| LESS THAN 7" | NONE | #5X30" | NONE | 30" CTR.-CTR. |
| 7" TO 10" | 1¼"X18" | #5X30" | 12" CTR.-CTR. | 30" CTR.-CTR. |
| GREATER THAN 10" | 1½"X18" | #6X40" | 12" CTR.-CTR. | 30" CTR.-CTR. |

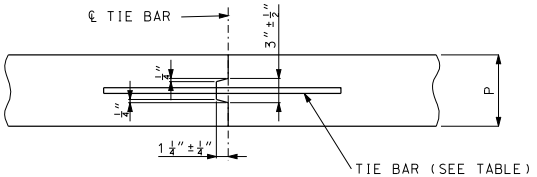


IF METAL IS USED TO FORM KEY DISCONTINUE STRIP FOR DISTANCE OF APPROXIMATELY 3" EACH SIDE OF TRANSVERSE JOINT.

TYPE (K) REQUIRES TIE BAR.

TYPE (M) CONSTRUCTED WITHOUT TIE BARS.

(K) AND (M) JOINTS SHALL NOT BE SAWED.

## TONGUE AND GROOVE JOINTS (K) AND (M)

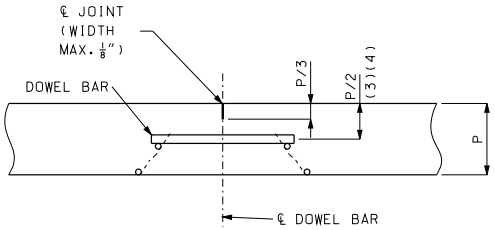


DOWELS REQUIRED. FOR PERMISSIBLE TYPES OF DOWELS SUPPORTING UNITS, SEE OTHER DRAWINGS.

TRANSVERSE CONTRACTION JOINTS FOR CONCRETE PAVEMENT OR BASE WIDENING SHALL MATCH EXISTING JOINTS.

## TRANSVERSE CONTRACTION JOINT (C1) (2)

(2) DOWEL BARS ARE REQUIRED FOR ALL PAVEMENTS HAVING THE SAME THICKNESS AS THE TRAVELED WAY.
(3) FOR PAVEMENTS HAVING THICKNESS IN 1/2" INCREMENTS, DOWEL BASKETS SHALL BE P/2- 1/2".
(4) DOWEL BARS MAY BE PLACED BY MECHANICAL MEANS AT THE OPTION OF THE CONTRACTOR.

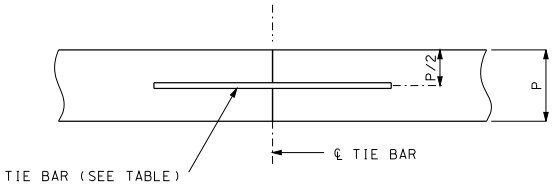


TIE BARS REQUIRED.

## LONGITUDINAL CONSTRUCTION JOINT (L2)

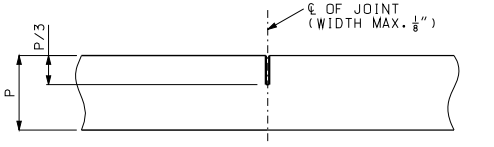


## TRANSVERSE CONTRACTION JOINT (C2)

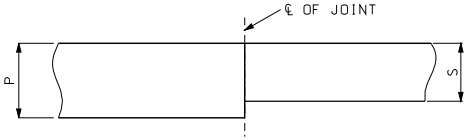


## LONGITUDINAL CONSTRUCTION JOINT FOR SHOULDER (L3)

S = SHOULDER THICKNESS

GENERAL NOTES:

THE FINAL POSITION OF ALL DOWELS AND TIE BARS SHALL BE PERPENDICULAR TO THE PLANE OF THE JOINT AND PARALLEL TO THE SURFACE OF THE PAVEMENT AND PARALLEL TO EACH OTHER.

(L3) JOINT FOR FULL DEPTH OR PARTIAL DEPTH SHOULDERS.


MISSOURI HIGHWAYS AND TRANSPORTATION COMMISSION
105 WEST CAPITOL
JEFFERSON CITY, MO 65102
1-888-ASK-MODOT (1-888-275-6636)


STATE OF MISSOURI KATHRYN PHILLIPS HARVEY NUMBER PE-23751 PROFESSIONAL ENGINEER
THIS SHEET HAS BEEN SIGNED, SEALED AND DATED ELECTRONICALLY.

# CONCRETE PAVEMENT AND BASE APPURTENANCES FOR 15' JOINT SPACING

DATE EFFECTIVE: 06/01/2010
DATE PREPARED: 4/1/2010

502.05M

SHEET NO. 3 OF 4

IF A SEAL IS PRESENT ON THIS SHEET IT HAS BEEN ELECTRONICALLY SEALED AND DATED.

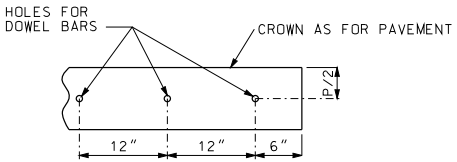


PART ELEVATION OF
HEADER PLANK

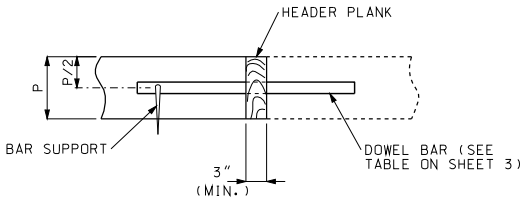


HEADER SECTION

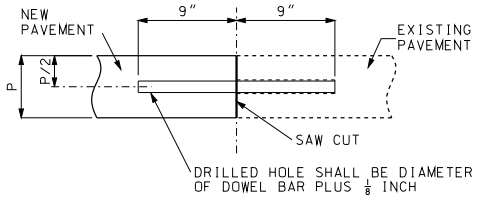


SAWED SECTION

THE HEADER BOARD SHALL BE SUFFICIENTLY RIGID TO PREVENT DISTORTION FROM THE TYPICAL SECTION AND MAINTAIN A STRAIGHT LINE FROM PAVEMENT EDGE TO PAVEMENT EDGE.

THE CONSTRUCTION JOINT MAY BE SAWED FULL DEPTH. HOLES FOR DOWEL BARS SHALL BE DRILLED AFTER THE CONCRETE HAS SUFFICIENT SET TO PREVENT DAMAGE. DOWEL BARS SHALL BE BONDED INTO THE HOLES.

BONDING FOR DOWEL BARS SHALL BE EPOXY OR POLYESTER BONDING AGENTS AS SPECIFIED IN SECTION 1039.

THE PORTION OF THE DOWEL OUTSIDE THE HOLE SHALL BE COATED WITH AN APPROVED LUBRICANT.

## CONSTRUCTION JOINT (C)

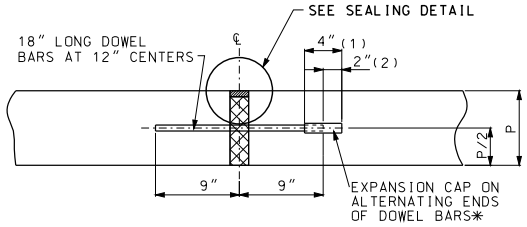


EXPANSION JOINTS (E)

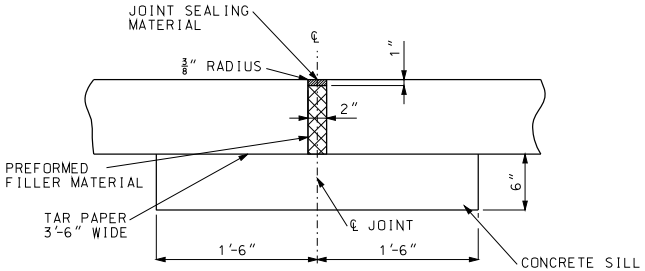


SILL SHALL EXTEND 18" BEYOND EACH EDGE OF THE PAVEMENT AND SHALL BE CONSTRUCTED OF CONCRETE REGARDLESS OF ADJACENT BASE MATERIAL.

ALTERNATE EXPANSION JOINTS (E)

(CONTRACTOR MAY SELECT EITHER EXPANSION JOINT (E))

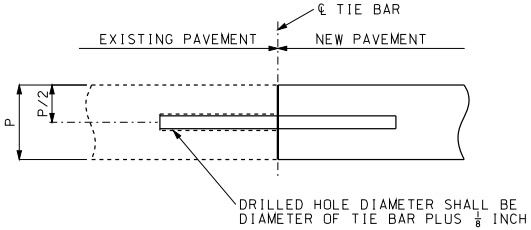


TIE BARS SHALL BE EPOXY COATED. DEFORMED REINFORCING BARS MEETING THE REQUIREMENTS OF SECTIONS 710 AND 1057.

BONDING FOR TIE BARS SHALL BE EPOXY OR POLYESTER BONDING AGENTS AS SPECIFIED IN SECTION 1039.

TIE BAR SIZE AND LENGTH SHALL BE BASED ON THE THICKNESS OF THE THINNER PAVEMENT OR SHOULDER TO BE TIED TOGETHER.

## LONGITUDINAL CONSTRUCTION JOINT
(EXISTING PAVEMENT) (L)

(1) LENGTH OF CAP

(2) GAP BETWEEN END OF CAP AND DOWEL.

* FOR EXPANSION JOINTS FORMED USING A CONSTRUCTION HEADER, THE EXPANSION CAPS SHALL BE INSTALLED ON THE EXPOSED END OF EACH BAR ONCE THE HEADER HAS BEEN REMOVED AND THE JOINT FILLER MATERIAL HAS BEEN INSTALLED.

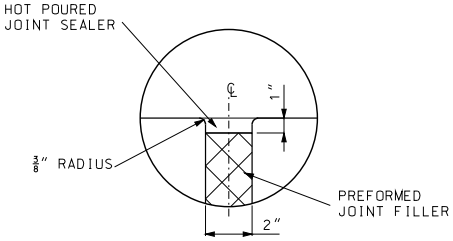


SEALING DETAIL

IF A SEAL IS PRESENT ON THIS SHEET IT HAS BEEN ELECTRONICALLY SEALED AND DATED.

MISSOURI HIGHWAYS AND TRANSPORTATION COMMISSION
105 WEST CAPITOL
JEFFERSON CITY, MO 65102
1-888-ASK-MODOT (1-888-275-6636)

STATE OF MISSOURI
KATHRYN PHILLIPS HARVEY
NUMBER PE-23751
PROFESSIONAL ENGINEER
THIS SHEET HAS BEEN SIGNED, SEALED AND DATED ELECTRONICALLY.

# CONCRETE PAVEMENT AND BASE APPURTENANCES FOR 15' JOINT SPACING

DATE EFFECTIVE: 06/01/2010
DATE PREPARED: 4/1/2010

502.05M

SHEET NO. 4 OF 4

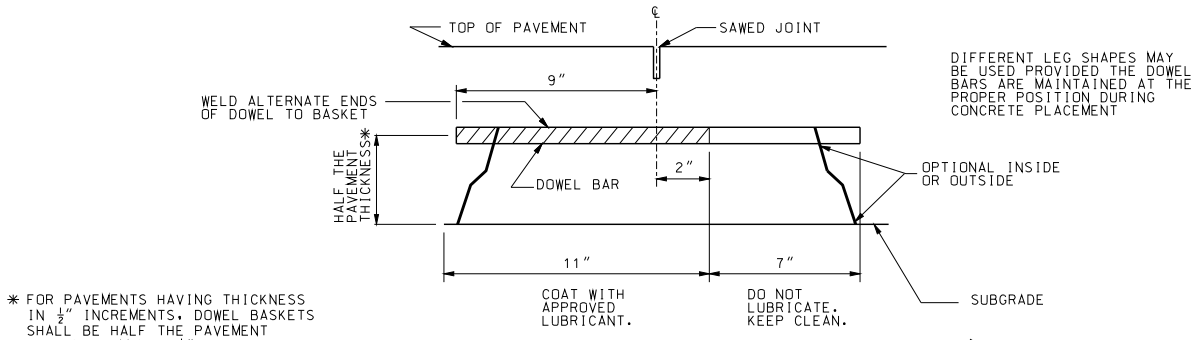


DIFFERENT LEG SHAPES MAY BE USED PROVIDED THE DOWEL BARS ARE MAINTAINED AT THE PROPER POSITION DURING CONCRETE PLACEMENT

| DOWEL BARS | | |
|---|---|---|
| PAVEMENT THICKNESS | BAR SIZE | |
| | DIAMETER | LENGTH |
| 10″ AND LESS | 1 1/4″ | 18″ |
| GREATER THAN 10″ | 1 1/2″ | 18″ |

* FOR PAVEMENTS HAVING THICKNESS IN 1/2″ INCREMENTS, DOWEL BASKETS SHALL BE HALF THE PAVEMENT THICKNESS MINUS 1/2″.

SECTION A-A

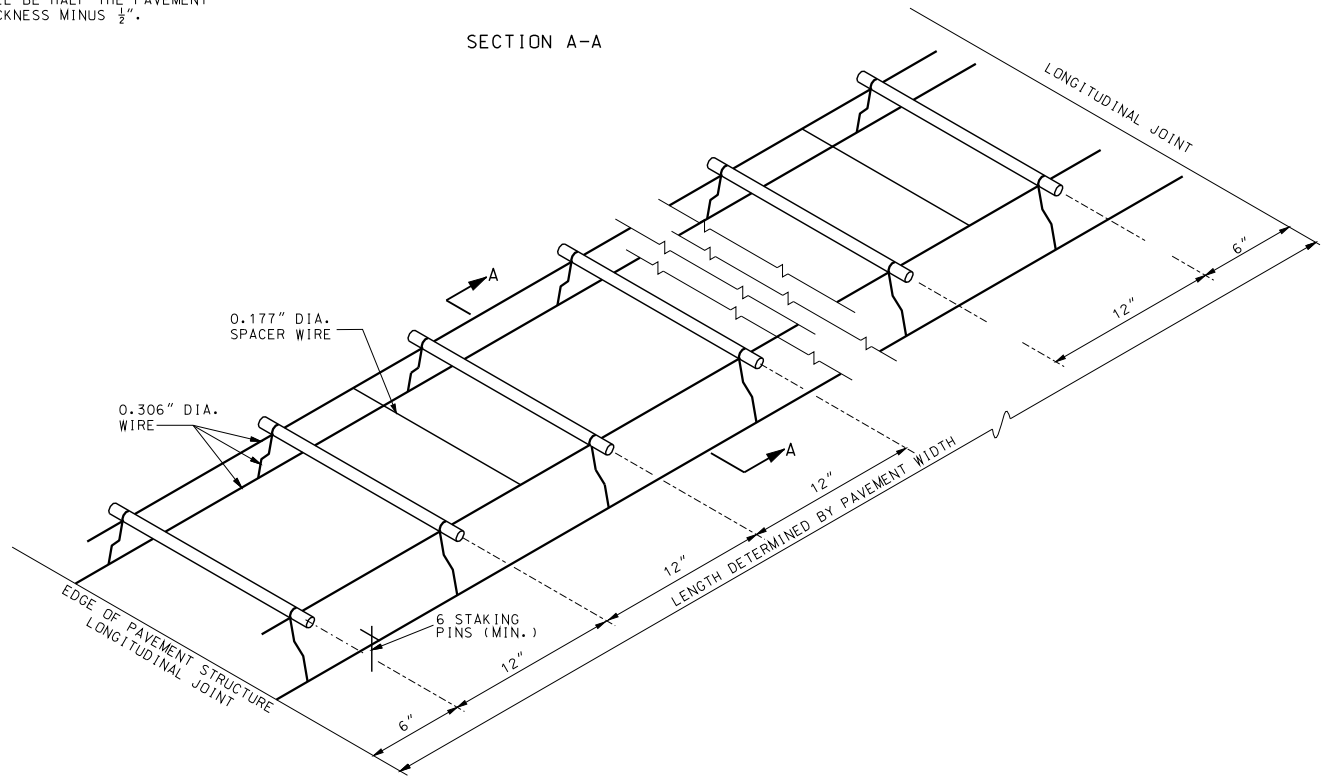


GENERAL NOTES:

THE DOWEL SUPPORTING UNITS SHALL BE FACTORY ASSEMBLED AND CAPABLE OF HOLDING THE DOWELS IN THEIR REQUIRED POSITIONS. IN THE COMPLETED JOINT INSTALLATION, DOWELS SHALL BE POSITIONED WITHIN 1/2″ OF THE VERTICAL AND HORIZONTAL PLANE AND IN THE LONGITUDINAL DIRECTION. THE SKEW TOLERANCE SHALL BE 1/4″.

THE FREE END OF EACH EPOXY COATED DOWEL SHALL BE MARKED WITH A SPOT OF PAINT AT LEAST ONE INCH IN DIAMETER AND CONTRASTING IN COLOR WITH THE EPOXY COATING.

WIRE SIZES SHOWN ARE MINIMUM REQUIRED.

WIRES, BARS OR CLIPS SHALL BE USED AS NECESSARY TO STRENGTHEN THE ASSEMBLIES.

THE DIAMETER OF THE SPACER WIRE SHALL NOT EXCEED 0.200″.

SPACER WIRE MAY BE CUT OR LEFT INTACT.

STAKING PINS SHALL BE FABRICATED FROM 0.306″ DIAMENTER WIRE MINIMUM WITH A SUITABLE HOOK. STAKING PINS SHALL HAVE A MINIMUM LENGTH OF 12″ FOR DOWEL ASSEMBLIES UNLESS OTHERWISE DIRECTED BY THE ENGINEER.

MINOR VARIATIONS IN THE CONFIGURATION OF THE SUPPORT UNITS WILL BE ALLOWED.

MISSOURI HIGHWAYS AND TRANSPORTATION COMMISSION
105 WEST CAPITOL
JEFFERSON CITY, MO 65102
1-888-ASK-MODOT (1-888-275-6636)

STATE OF MISSOURI
KATHRYN PHILLIPS HARVEY
NUMBER PE-23751
PROFESSIONAL ENGINEER
THIS SHEET HAS BEEN SIGNED, SEALED AND DATED ELECTRONICALLY.

# DOWEL SUPPORTING UNITS

APPROVED FOR USE
WITH TRANSVERSE JOINTS

DATE EFFECTIVE: 06/01/2010
DATE PREPARED: 4/1/2010

502.10K

SHEET NO. 1 OF 2

IF A SEAL IS PRESENT ON THIS SHEET IT HAS BEEN ELECTRONICALLY SEALED AND DATED.

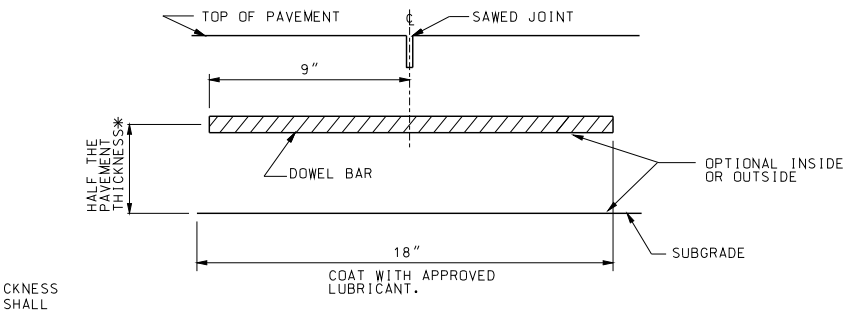


SECTION C-C

* FOR PAVEMENTS HAVING THICKNESS IN ½" INCREMENTS, DOWEL SHALL BE PLACED HALF THE PAVEMENT THICKNESS MINUS ½".

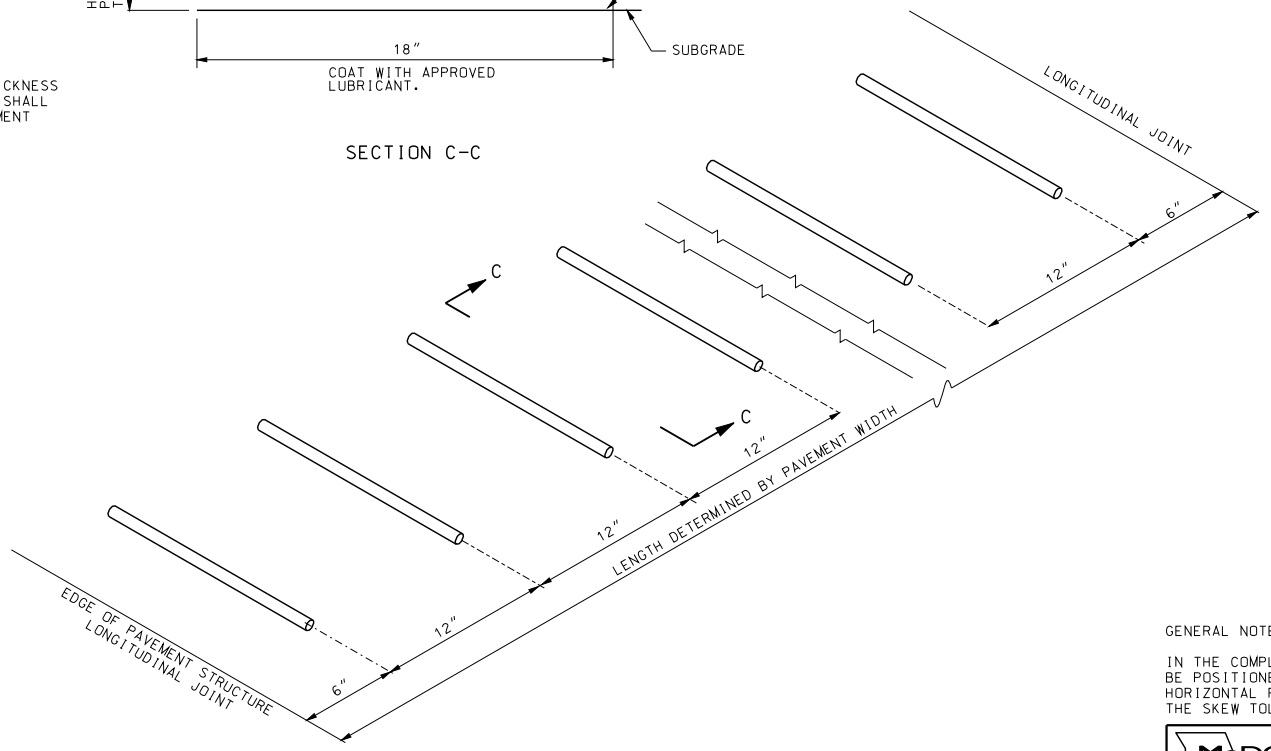


GENERAL NOTES:

IN THE COMPLETED JOINT INSTALLATION, DOWELS SHALL BE POSITIONED WITHIN 1/2" OF THE VERTICAL AND HORIZONTAL PLANE AND IN THE LONGITUDINAL DIRECTION. THE SKEW TOLERANCE SHALL BE 1/4".

MISSOURI HIGHWAYS AND TRANSPORTATION COMMISSION
105 WEST CAPITOL
JEFFERSON CITY, MO 65102
1-888-ASK-MODOT (1-888-275-6636)

STATE OF MISSOURI
KATHRYN PHILLIPS HARVEY
NUMBER PE-23751
PROFESSIONAL ENGINEER
THIS SHEET HAS BEEN SIGNED, SEALED AND DATED ELECTRONICALLY.

# DOWEL SUPPORTING UNITS

MECHANICAL PLACEMENT

DATE EFFECTIVE: 06/01/2010
DATE PREPARED: 4/1/2010

502.10K

SHEET NO. 2 OF 2

IF A SEAL IS PRESENT ON THIS SHEET IT HAS BEEN ELECTRONICALLY SEALED AND DATED.

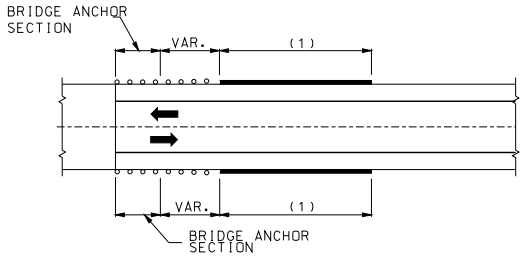


TWO-WAY PAVEMENT - USE GUARDRAIL AT ALL FOUR CORNERS.

AT BRIDGE ENDS

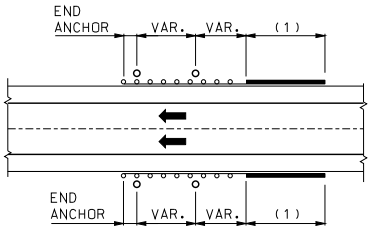


SHOULDER INSTALLATION WITH DIVIDED PAVEMENT

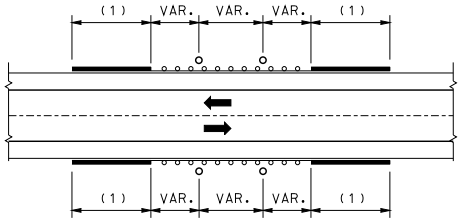


SHOULDER INSTALLATION WITH TWO-WAY PAVEMENT

AT OBSTACLES

FOR MULTIPLE OBSTACLES - SPECIFY VAR. IN 12'-6" INCREMENTS.

## GUARDRAIL LOCATIONS

LEGEND

GUARDRAIL

OBSTACLE

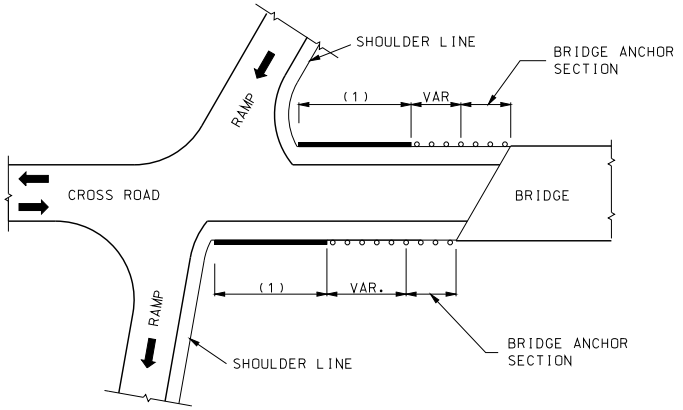


BRIDGE ENDS

## GUARDRAIL LOCATION AT INTERCHANGE

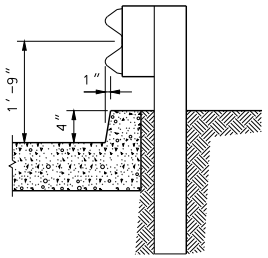


GUARDRAIL AT CURBS (3)

(1) APPROVED TYPE A CRASHWORTHY END TERMINAL.
(2) SHOULDER WIDENING SHALL CONSIST OF EMBANKMENT MATERIAL COMPACTED IN ACCORDANCE WITH SECTION 203.4 OF THE STANDARD SPECIFICATIONS.
(3) WHEN GUARDRAIL IS CONSTRUCTED OVER CURBS, THE CURBS SHALL BE CONSTRUCTED AS SHOWN.

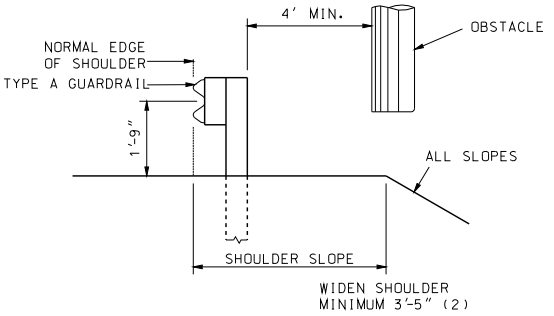


LOCATION OTHER THAN ℄ MEDIAN

LATERAL PLACEMENT OF GUARDRAIL FOR SHOULDER INSTALLATION

IF A SEAL IS PRESENT ON THIS SHEET IT HAS BEEN ELECTRONICALLY SEALED AND DATED.

MISSOURI HIGHWAYS AND TRANSPORTATION COMMISSION
105 WEST CAPITOL
JEFFERSON CITY, MO 65102
1-888-ASK-MODOT (1-888-275-6636)

STATE OF MISSOURI
KATHRYN PHILLIPS HARVEY
NUMBER PE-23751
PROFESSIONAL ENGINEER
THIS SHEET HAS BEEN SIGNED, SEALED AND DATED ELECTRONICALLY.

# GUARDRAIL

DATE EFFECTIVE: 02/01/2012
DATE PREPARED: 12/19/2011

606.00AU

SHEET NO. 1 OF 17

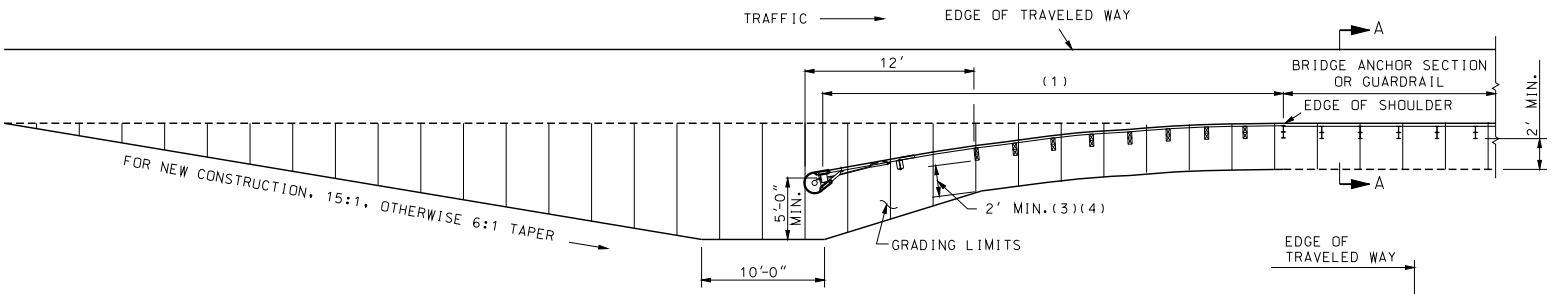


## GRADING LIMITS FOR TYPE A FLARED CRASHWORTHY END TERMINAL

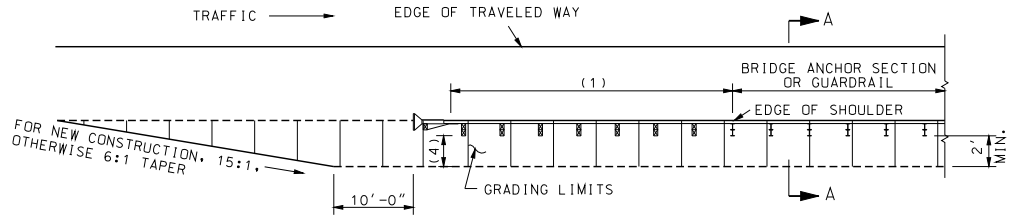


## GRADING LIMITS FOR TYPE A NON-FLARED CRASHWORTHY END TERMINAL

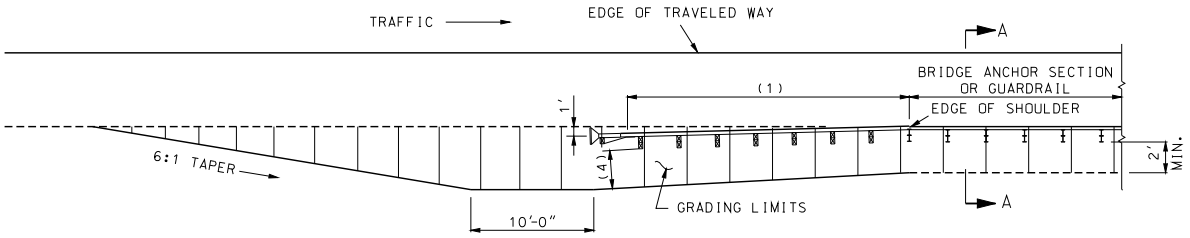


## GRADING LIMITS FOR TYPE A NON-FLARED OFFSET CRASHWORTHY END TERMINAL

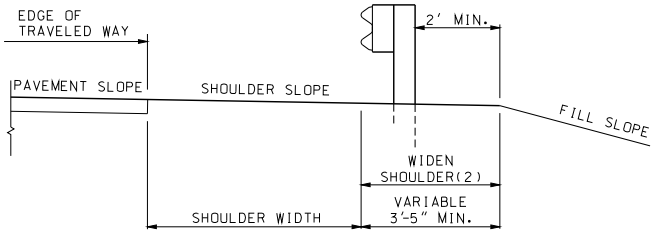


## SECTION A-A

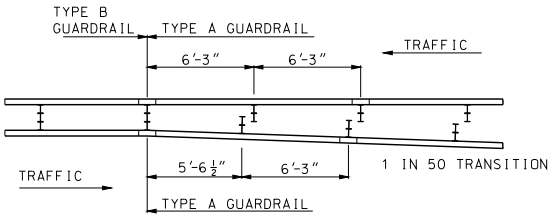


## DETAIL FOR TRANSITIONING BETWEEN TYPE A AND TYPE B GUARDRAIL

GENERAL NOTES:

THE CONTRACTOR SHALL PROVIDE THE ENGINEER WITH APPROVED SHOP DRAWINGS OF THE APPROVED CRASH-WORTHY END TERMINAL.

END ANCHORS SHALL BE INSTALLED ON ENDS OF GUARDRAIL RUNS WHERE CRASHWORTHY END TERMINAL IS NOT REQUIRED.

(1) APPROVED TYPE A CRASHWORTHY END TERMINAL.
(2) SHOULDER WIDENING SHALL CONSIST OF EMBANKMENT MATERIAL COMPACTED IN ACCORDANCE WITH SECTION 203.4 OF THE STANDARD SPECIFICATIONS.
(3) THE SLOPE SHOULD BREAK BEHIND THIRD POST.
(4) AS PER MANUFACTURER'S SPECIFICATIONS. 2' MINIMUM. NO DIRECT PAY.

MISSOURI HIGHWAYS AND TRANSPORTATION COMMISSION
105 WEST CAPITOL
JEFFERSON CITY, MO 65102
1-888-ASK-MODOT (1-888-275-6636)

STATE OF MISSOURI
KATHRYN PHILLIPS HARVEY
NUMBER PE-2007051
PROFESSIONAL ENGINEER
THIS SHEET HAS BEEN SIGNED, SEALED AND DATED ELECTRONICALLY.

# GUARDRAIL

DATE EFFECTIVE: 02/01/2012
DATE PREPARED: 12/19/2011

606.00AU

SHEET NO. 2 OF 17

IF A SEAL IS PRESENT ON THIS SHEET IT HAS BEEN ELECTRONICALLY SEALED AND DATED.

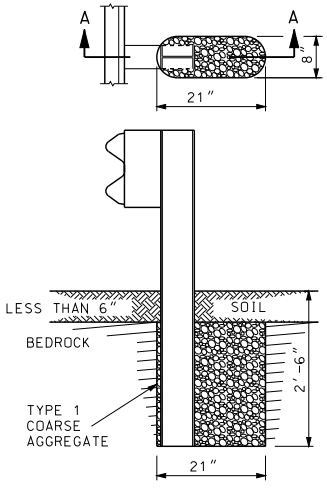


SECTION A-A
ROCK ENCOUNTERED
UP TO 6" BENEATH SURFACE

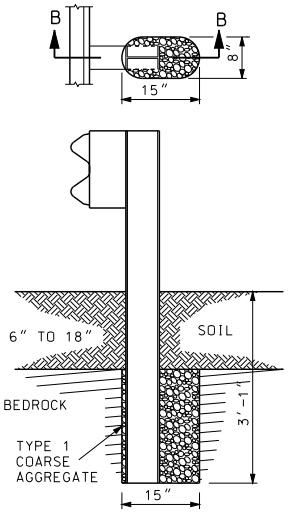


SECTION B-B
ROCK ENCOUNTERED
6" TO 18" BENEATH SURFACE

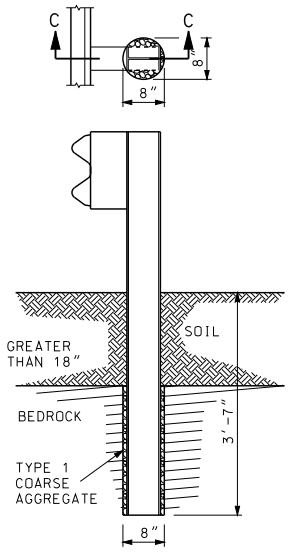


SECTION C-C
ROCK ENCOUNTERED MORE
THAN 18" BENEATH SURFACE

## SETTING POST IN SOLID ROCK

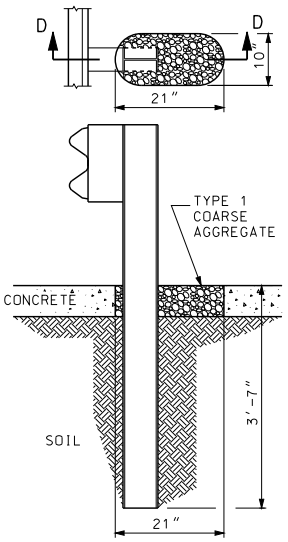


SECTION D-D

## SETTING POST THROUGH CONCRETE

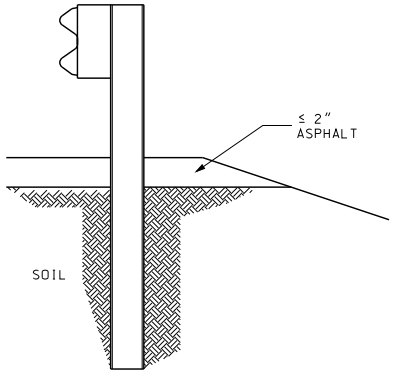


## SETTING POST THROUGH ASPHALT

GENERAL NOTES:

HOLES IN SOLID ROCK SHALL PROVIDE A DIAMETER OF NOT LESS THAN 4 INCHES GREATER THAN THE MAXIMUM TRANSVERSE DIMENSION OF THE POST SECTION.

POST MAY BE SHORTER WHERE PLACED IN 2 FEET OF SOLID ROCK. STEEL POSTS MAY BE FLAME OR SAW CUT. REPAIR OF CUT SHALL BE IN ACCORDANCE WITH SECTION 712 OF THE STANDARD SPECIFICATIONS.

MISSOURI HIGHWAYS AND TRANSPORTATION COMMISSION
105 WEST CAPITOL
JEFFERSON CITY, MO 65102
1-888-ASK-MODOT (1-888-275-6636)

STATE OF MISSOURI
KATHRYN PHILLIPS HARVEY
NUMBER PE-23751
PROFESSIONAL ENGINEER
THIS SHEET HAS BEEN SIGNED, SEALED AND DATED ELECTRONICALLY.

# GUARDRAIL

SETTING POST IN SOLID ROCK AND THROUGH CONCRETE OR ASPHALT

DATE EFFECTIVE: 02/01/2012
DATE PREPARED: 12/19/2011

606.00AU

SHEET NO. 3 OF 17

IF A SEAL IS PRESENT ON THIS SHEET IT HAS BEEN ELECTRONICALLY SEALED AND DATED.

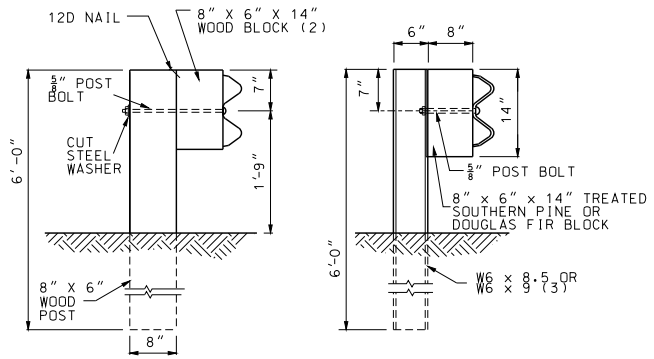


WOOD POST AND WOOD OR PLASTIC BLOCK

STEEL POST AND WOOD OR PLASTIC BLOCK

## TYPE A AND D GUARDRAIL

(1) END TREATMENT AS SPECIFIED ON PLANS.
(2) AN ALTERNATE DESIGN, AN 8" X 4" X 14" WOOD BLOCK, MAY BE USED
(3) THE CONTRACTOR MAY FURNISH EQUIVALENT SECTIONS FABRICATED FROM MATERIAL MEETING AND IN ACCORDANCE WITH SECTION 1040.

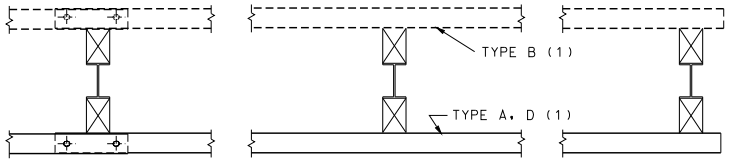


PLAN

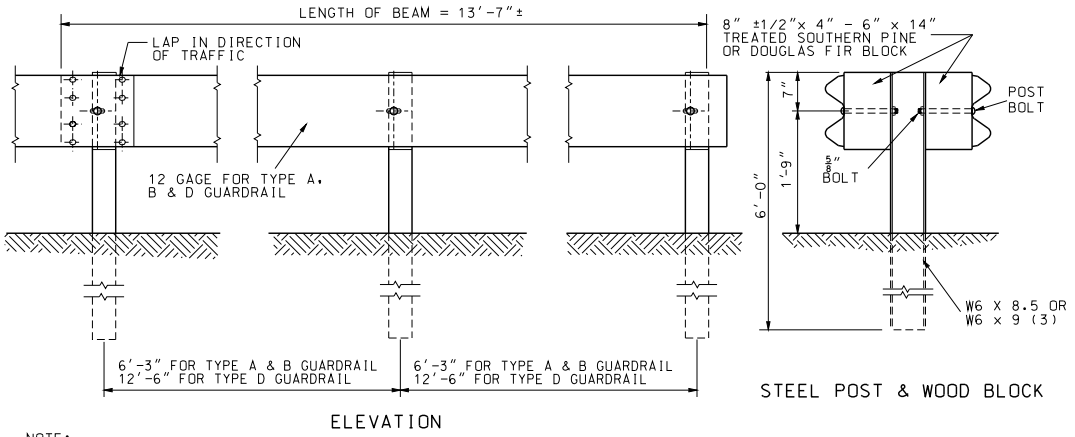


ELEVATION

STEEL POST & WOOD BLOCK

NOTE:
FOR TYPE E GUARDRAIL AND TRANSITION DETAILS SEE SHEET 8 OF 17.

## TYPE B GUARDRAIL

GENERAL NOTES:

WASHERS SHALL BE OMITTED ON ALL CONNECTIONS ON TYPE A, B AND D GUARDRAIL.

ALL DIMENSIONS ARE SUBJECT TO MANUFACTURING TOLERANCES EXCEPT WHERE ALLOWABLE TOLERANCES ARE SHOWN.

MISSOURI HIGHWAYS AND TRANSPORTATION COMMISSION
105 WEST CAPITOL
JEFFERSON CITY, MO 65102
1-888-ASK-MODOT (1-888-275-6636)

STATE OF MISSOURI
KATHRYN PHILLIPS HARVEY
NUMBER PE-23751
PROFESSIONAL ENGINEER
THIS SHEET HAS BEEN SIGNED, SEALED AND DATED ELECTRONICALLY.

# GUARDRAIL

TYPES A, B AND D

DATE EFFECTIVE: 02/01/2012
DATE PREPARED: 12/19/2011

606.00AU

SHEET NO. 4 OF 17

IF A SEAL IS PRESENT ON THIS SHEET IT HAS BEEN ELECTRONICALLY SEALED AND DATED.

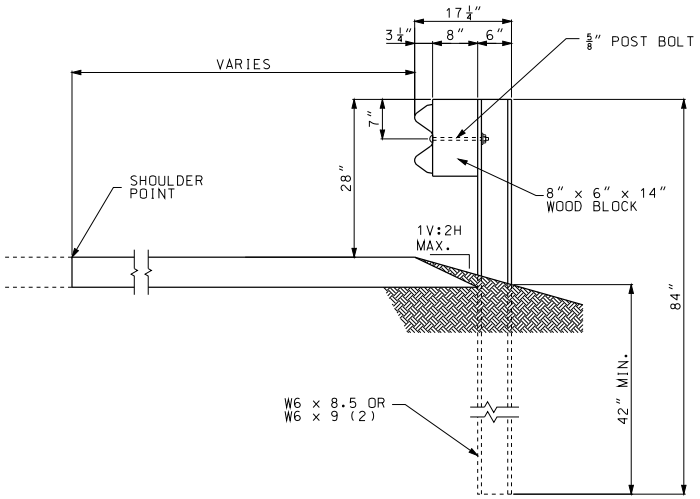


## STEEL POST AND WOOD BLOCK TYPICAL SECTION

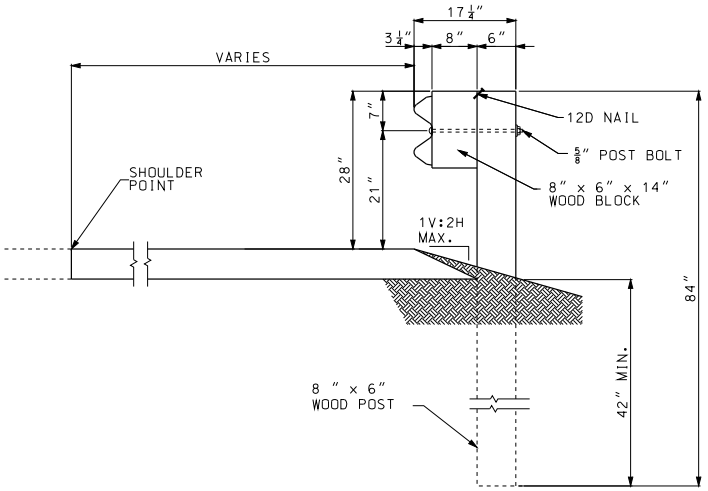


## WOOD POST AND BLOCK TYPICAL SECTION

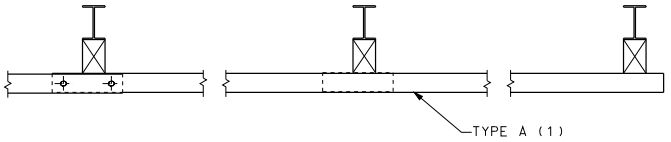


## PLAN

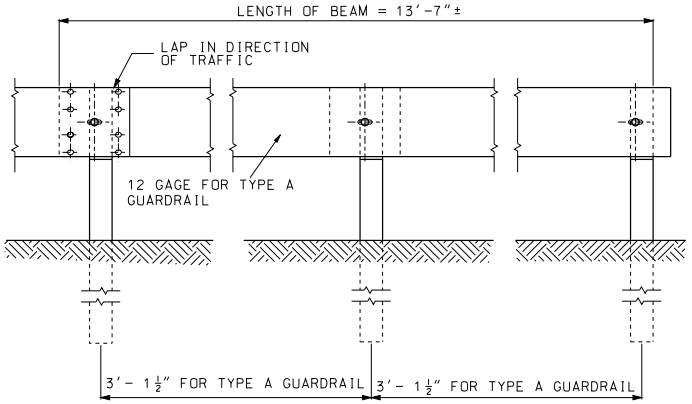


## ELEVATION

NOTE:

(1) END TREATMENT AS SPECIFIED ON PLANS

(2) POST EMBEDDED A MINIMUM OF 42" IN SOIL.

GENERAL NOTES:

WASHERS SHALL BE OMITTED ON ALL CONNECTIONS ON TYPE A GUARDRAIL.

POST MAY BE WOOD OR STEEL WITH ONLY ONE MATERIAL ALLOWED WITHIN A SINGLE PROJECT, EXCEPT FOR END TREATMENTS.

ALL DIMENSIONS ARE SUBJECT TO MANUFACTURING TOLERANCES EXCEPT WHERE ALLOWABLE TOLERANCES ARE SHOWN.

MISSOURI HIGHWAYS AND TRANSPORTATION COMMISSION
105 WEST CAPITOL
JEFFERSON CITY, MO 65102
1-888-ASK-MODOT (1-888-275-6636)

STATE OF MISSOURI
KATHRYN PHILLIPS HARVEY
NUMBER PE-23751
PROFESSIONAL ENGINEER
THIS SHEET HAS BEEN SIGNED, SEALED AND DATED ELECTRONICALLY.

# GUARDRAIL
7 FT. POST

DATE EFFECTIVE: 02/01/2012
DATE PREPARED: 12/19/2011

606.00AU

SHEET NO. 5 OF 17

IF A SEAL IS PRESENT ON THIS SHEET IT HAS BEEN ELECTRONICALLY SEALED AND DATED.

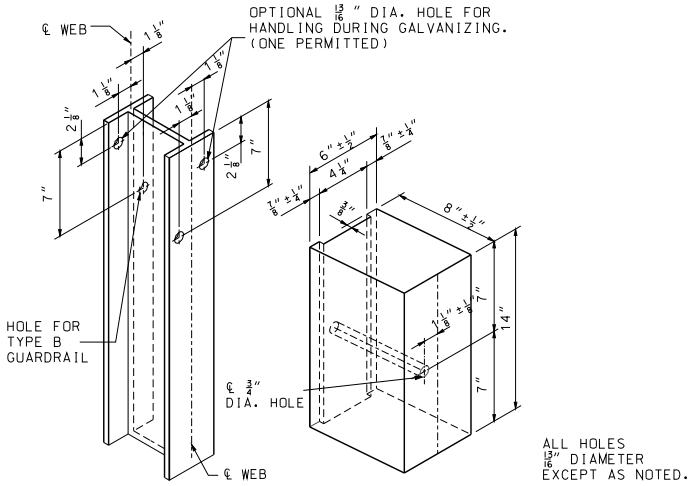


## HOLE PUNCHING DETAIL
FOR STEEL POST AND WOOD OR PLASTIC BLOCKS (1)

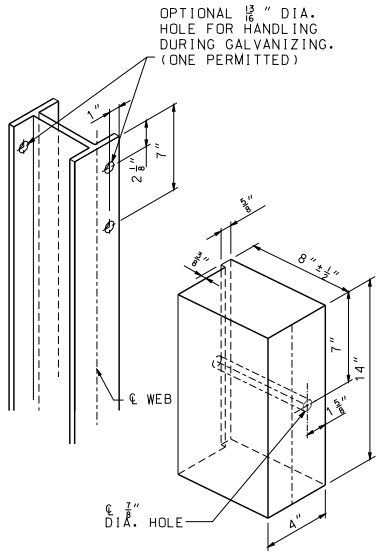


## ALTERNATE DESIGN FOR WOOD BLOCK

(1) THE OVERALL NOMINAL DIMENSIONS SHOWN SHALL BE MET, ALTHOUGH THE SHAPE OF THE PLASTIC BLOCKS MAY VARY FROM THE SHAPE SHOWN, EXCEPT THE 7/8" ±1/4" FLANGE AND THE OVERALL WIDTH DIMENSIONS MAY BE WAIVED IF APPROVED BY PROJECT OPERATIONS.

IF A SEAL IS PRESENT ON THIS SHEET IT HAS BEEN ELECTRONICALLY SEALED AND DATED.

MISSOURI HIGHWAYS AND TRANSPORTATION COMMISSION
105 WEST CAPITOL
JEFFERSON CITY, MO 65102
1-888-ASK-MODOT (1-888-275-6636)

STATE OF MISSOURI
KATHRYN PHILLIPS HARVEY
NUMBER PE-23751
PROFESSIONAL ENGINEER
THIS SHEET HAS BEEN SIGNED, SEALED AND DATED ELECTRONICALLY.

# GUARDRAIL

DATE EFFECTIVE: 02/01/2012
DATE PREPARED: 12/19/2011

606.00AU

SHEET NO. 6 OF 17

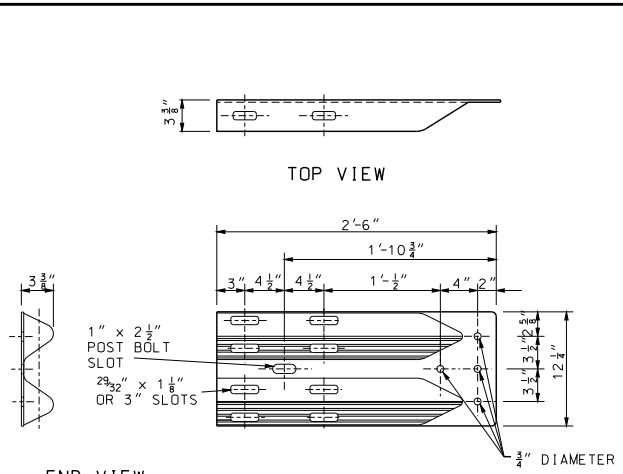


## TERMINAL CONNECTOR

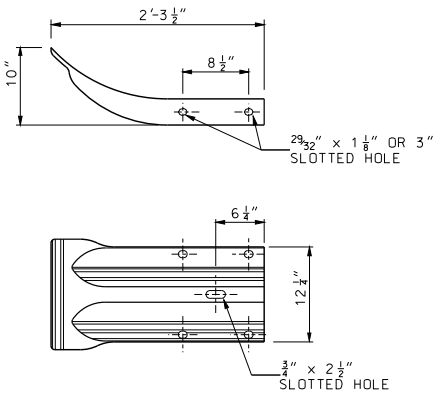


## END SECTION
12 GAGE

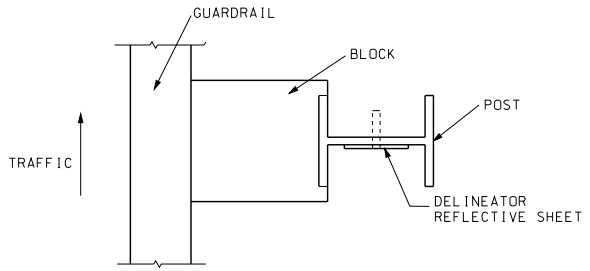


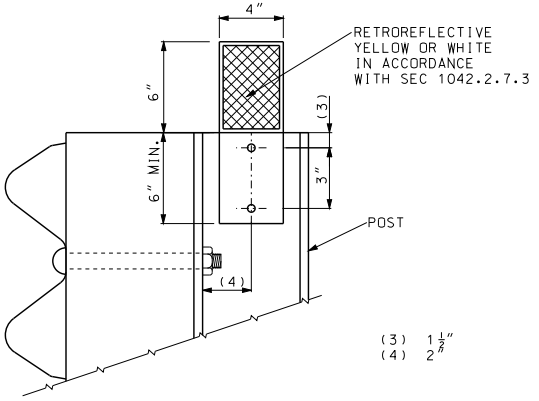


DELINEATORS SHALL BE AFFIXED WITH 1 3/4" LONG X 1/4" DIAMETER BOLTS FOR STEEL POSTS OR 2" (MIN.) LONG X 1/4" DIAMETER SCREWS FOR WOOD POSTS. THE DIAMETER OF THE BOLT'S OR SCREW'S HEAD SHALL BE TWICE THE DIAMETER OF THE HOLE, WITH A MINIMUM OF 1/2". WASHERS SHALL BE USED WITH THE BOLTS AND SHALL HAVE 1/2" DIAMETER HOLES.

## DELINEATORS ON NEW GUARDRAIL

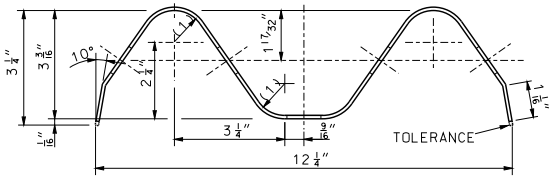


## SECTION THROUGH BEAM

(1) 15/16" RADIUS
(2) 2" (TOLERANCE +1 1/4", -1/4")

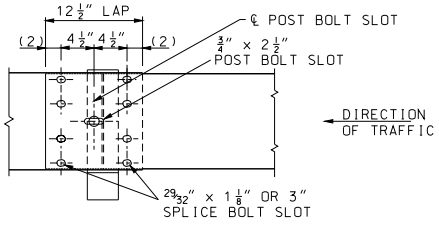


## BEAM SPLICE AT POST
## TYPE A, B AND D GUARDRAIL

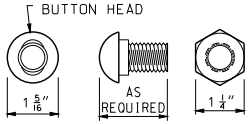


OVAL SHOULDER SHALL BE OF ADEQUATE HEIGHT, LENGTH & SHAPE TO PREVENT TURNING DURING INSTALLATION OR REMOVAL OF BOLT.

## 5/8" POST OR SPLICE BOLT

NOTE: PORTIONS OF BEAM WITH UNUSED BOLT SLOTS TO BE LAPPED BEHIND.

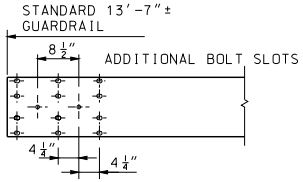


BEAM DETAILS SHOWING LOCATION OF ADDITIONAL BOLT SLOTS NECESSARY TO OBTAIN GUARDRAIL OFFSET.

MISSOURI HIGHWAYS AND TRANSPORTATION COMMISSION
105 WEST CAPITOL
JEFFERSON CITY, MO 65102
1-888-ASK-MODOT (1-888-275-6636)

STATE OF MISSOURI
KATHRYN PHILLIPS HARVEY
NUMBER PE-23751
PROFESSIONAL ENGINEER
THIS SHEET HAS BEEN SIGNED, SEALED AND DATED ELECTRONICALLY.

# GUARDRAIL

DATE EFFECTIVE: 02/01/2012
DATE PREPARED: 12/19/2011

606.00AU

SHEET NO. 7 OF 17

IF A SEAL IS PRESENT ON THIS SHEET IT HAS BEEN ELECTRONICALLY SEALED AND DATED.

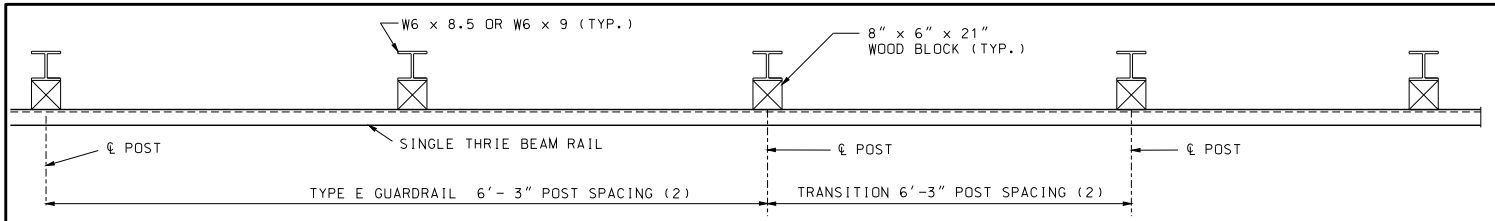


## PLAN

(1) THE CONTRACTOR MAY FURNISH EQUIVALENT SECTIONS FABRICATED FROM MATERIAL MEETING AND IN ACCORDANCE WITH SECTION 1040.

(2) IF THE TRANSITION IS CONNECTED TO A BRIDGE ANCHOR SECTION, POST SPACING FOR TYPE E GUARDRAIL AND THE TRANSITION SECTION SHALL BE 3'-1¼" . FOR ALL OTHER CASES, POST SPACING SHALL BE 6'-3".

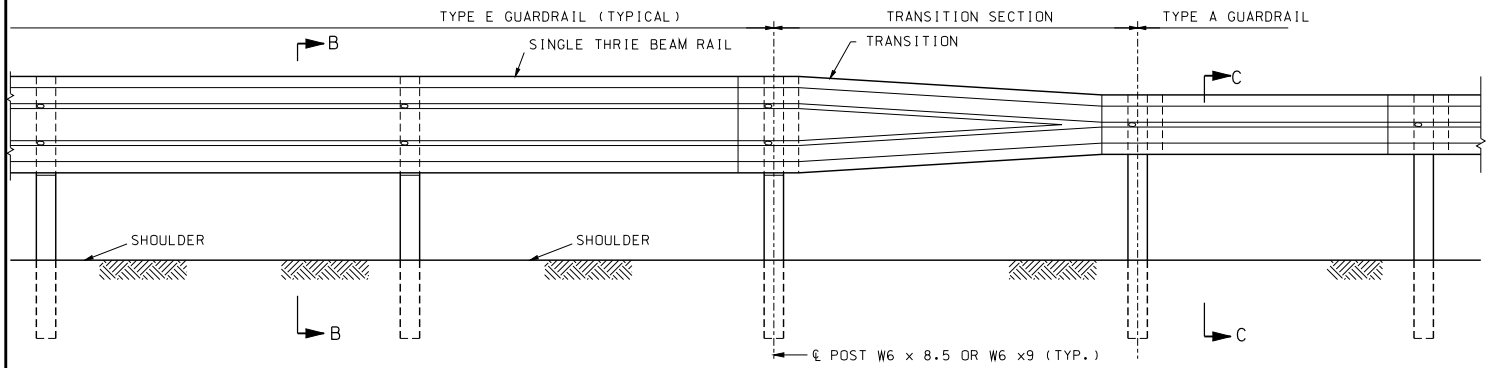


## PART SECTION SHOWING TYPE E TO TYPE A GUARDRAIL TRANSITION

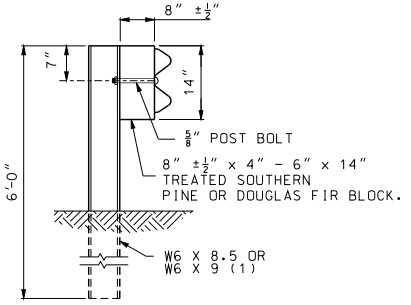


SECTION C-C
FOR WOOD BLOCKS

THE OVERALL NOMINAL DIMENSIONS SHOWN SHALL BE MET, ALTHOUGH THE SHAPE OF THE PLASTIC BLOCKS MAY VARY FROM THE SHAPE SHOWN, EXCEPT THE 7/8" ±1/4" FLANGE AND THE OVERALL WIDTH DIMENSIONS MAY BE WAIVED IF APPROVED BY PROJECT OPERATIONS.

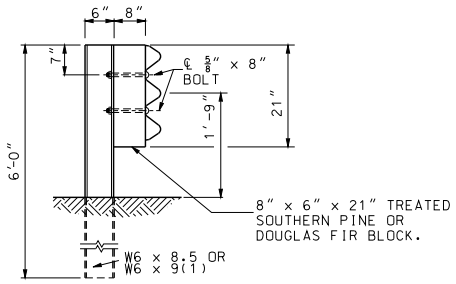


SECTION B-B
FOR WOOD BLOCKS

NOTE: BLOCKS SHALL BE THE SAME TYPE THROUGHOUT THE PROJECT LIMITS.

ALL HOLES 13/16" DIAMETER EXCEPT AS NOTED

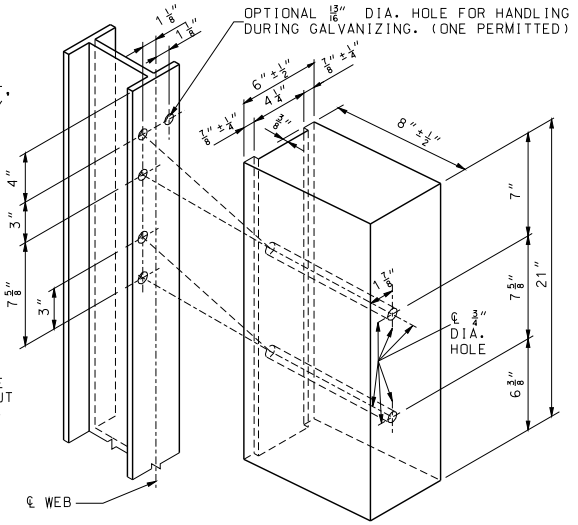


## HOLE PUNCHING DETAIL
FOR STEEL POST & WOOD OR PLASTIC BLOCKS

GENERAL NOTES:

TYPE E GUARDRAIL SHALL USE 6'-3" POST SPACING UNLESS 3'-1½" POST IS SPECIFIED.

THE THRIE BEAM RAIL FOR THE TYPE E GUARDRAIL AND THE TRANSITION SECTION SHALL BE MADE OF STEEL AND SHALL BE 12 GUAGE.

FOR PROTECTIVE COATING AND MATERAL REQUIREMENTS, SEE SECTION 1040 OF THE STANDARD SPECIFICATIONS.

SEE SHEET 3 OF 13 FOR REQUIREMENTS FOR SETTING POSTS AT OBSTRUCTIONS.

ALL DIMENSIONS ARE SUBJECT TO MANUFACTURING TOLERANCES EXCEPT WHERE ALLOWABLE TOLERANCES ARE SHOWN.

FOR DETAILS NOT SHOWN, SEE OTHER SHEETS OF THIS DRAWING.

MISSOURI HIGHWAYS AND TRANSPORTATION COMMISSION
105 WEST CAPITOL
JEFFERSON CITY, MO 65102
1-888-ASK-MODOT (1-888-275-6636)

STATE OF MISSOURI
KATHRYN PHILLIPS HARVEY
NUMBER PE-23751
PROFESSIONAL ENGINEER
THIS SHEET HAS BEEN SIGNED, SEALED AND DATED ELECTRONICALLY.

# GUARDRAIL
TYPE E

DATE EFFECTIVE: 02/01/2012
DATE PREPARED: 12/19/2011

606.00AU

SHEET NO.
8 OF 17

IF A SEAL IS PRESENT ON THIS SHEET IT HAS BEEN ELECTRONICALLY SEALED AND DATED.

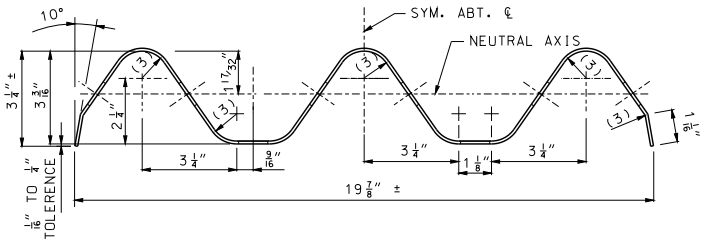


## SECTION THRU THRIE BEAM RAIL

(1) 2" (TOLERANCE +1 1/4", -1/4")
(2) SHOULDER WIDENING SHALL CONSIST OF EMBANKMENT MATERIAL COMPACTED IN ACCORDANCE WITH SETION 203.4 OF STANDARD SPECIFICATION.
(3) 15/16" RADIUS

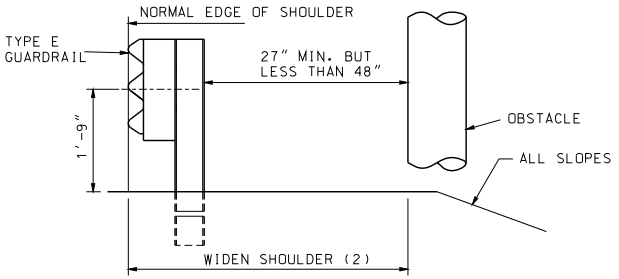


## LATERAL PLACEMENT OF TYPE E GUARDRAIL

SHOULDER ENCOACHMENT WILL BE PERMITTED TO OBTAIN MINIMUM CLEARANCE AT EXISTING OBSTACLES. A 50:1 TAPER SHALL BE USED FROM THE NORMAL SHOULDER LINE LOCATION TO THE ENCROACHMENT LOCATION AND, IF GUARDRAIL IS CONTINOUS, BACK TO THE LOCATION.

USE 25 FEET OF TYPE E GUARDRAIL PRECEDING THE OBSTACLE, AND THROUGH THE LIMITS OF THE OBSTACLE WHEN THE ABOVE CONDITION EXISTS.

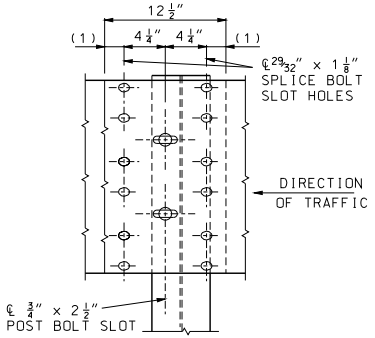


## THRIE BEAM RAIL SPLICE AT POST

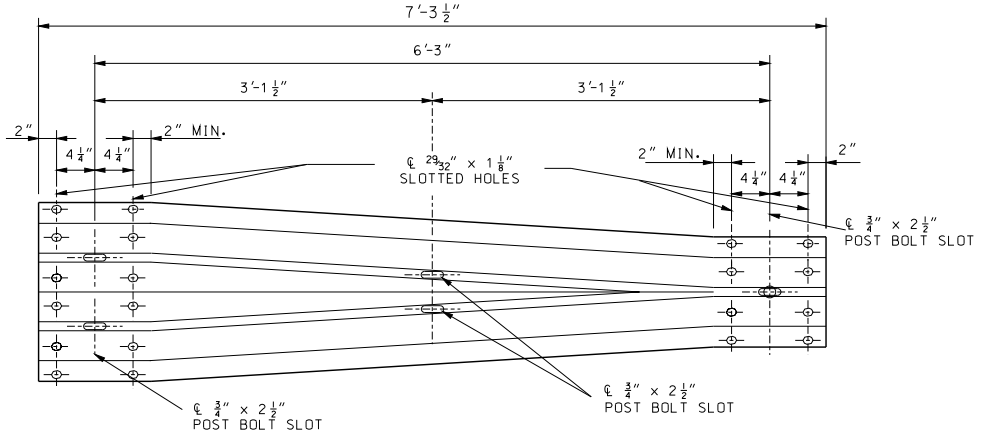


## ELEVATION OF TRANSITION SECTION

IF A SEAL IS PRESENT ON THIS SHEET IT HAS BEEN ELECTRONICALLY SEALED AND DATED.

MISSOURI HIGHWAYS AND TRANSPORTATION COMMISSION
105 WEST CAPITOL
JEFFERSON CITY, MO 65102
1-888-ASK-MODOT (1-888-275-6636)

STATE OF MISSOURI
KATHRYN PHILLIPS HARVEY
NUMBER PE-23751
PROFESSIONAL ENGINEER
THIS SHEET HAS BEEN SIGNED, SEALED AND DATED ELECTRONICALLY.

# GUARDRAIL
TYPE E

DATE EFFECTIVE: 02/01/2012
DATE PREPARED: 12/19/2011

606.00AU

SHEET NO. 9 OF 17

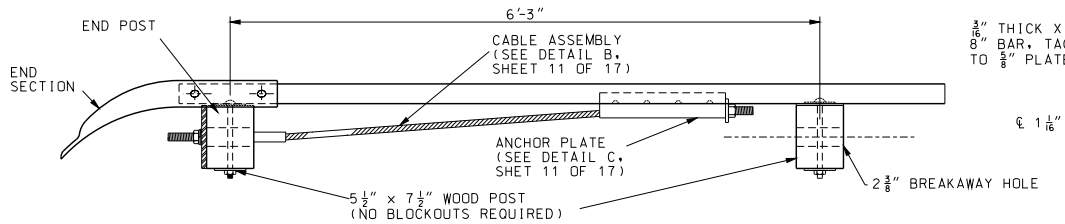


NOTE: SEE SHEET 7 OF 17 FOR DETAILS OF END SECTION.

PLAN

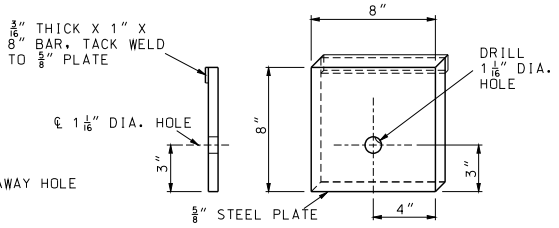


DETAIL OF
STEEL BEARING PLATE

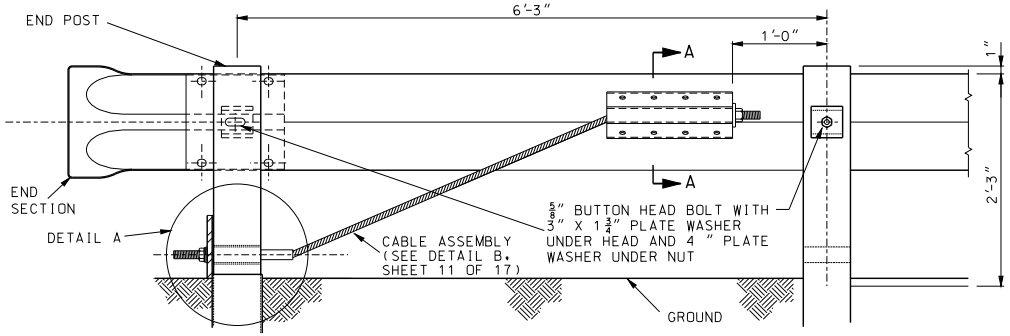


POST 1 ELEVATION (BACK SIDE) POST 2

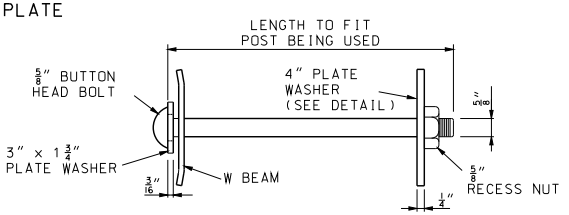


POST BOLT ASSEMBLY

## END ANCHOR DETAILS

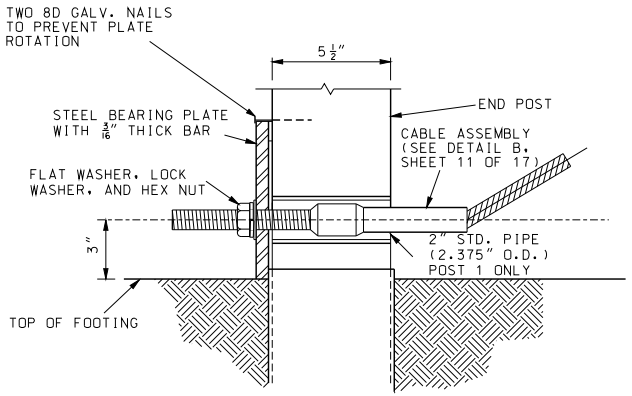


DETAIL A
(END POST DETAIL)

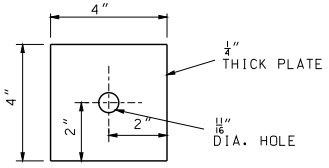


4" PLATE WASHER

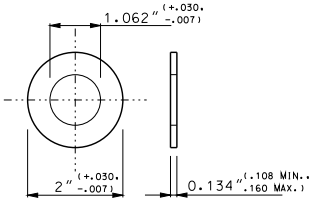


TYPE A WASHER

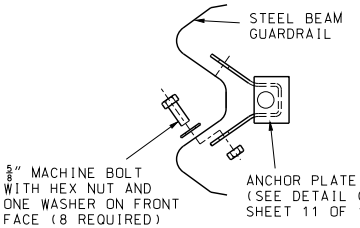


SECTION A-A

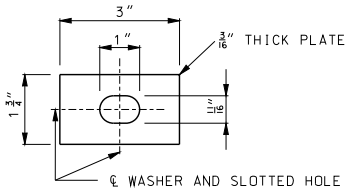


3" x 1 3/4"
PLATE WASHER

GENERAL NOTES:

END ANCHOR DETAILS SHOWN SHALL BE USED ONLY ON DOWN STREAM ENDS OF GUARDRAIL WHEN AN END ANCHOR IS REQUIRED.

THE DETAILS SHOWN ARE FOR AN END ANCHORAGE SYSTEM FOR GUARDRAIL. GUARDRAIL AND POSTS ARE PAID FOR SEPARATELY.

CABLE ASSEMBLY AND ANCHOR PLATE SHALL BE SUBJECT TO APPROVAL BY THE ENGINEER AND SHALL HAVE A MINIMUM BREAKING STRENGTH OF 20 TONS.

ALL FITTINGS AND HARDWARE REQUIRED SHALL BE GALVANIZED AFTER FABRICATION, SEE SECTION 1040 STANDARD SPECIFICATION.

WOOD POSTS 1 AND 2 SHALL BE 5 1/2" X 7 1/2".

SEE SECTION 1050 STANDARD SPECIFICATIONS FOR WOOD POST.

MISSOURI HIGHWAYS AND TRANSPORTATION COMMISSION
105 WEST CAPITOL
JEFFERSON CITY, MO 65102
1-888-ASK-MODOT (1-888-275-6636)

STATE OF MISSOURI
KATHRYN PHILLIPS HARVEY
NUMBER PE-23751
PROFESSIONAL ENGINEER
THIS SHEET HAS BEEN SIGNED, SEALED AND DATED ELECTRONICALLY.

# GUARDRAIL

## END ANCHOR DETAILS

DATE EFFECTIVE: 02/01/2012
DATE PREPARED: 12/19/2011

606.00AU

SHEET NO. 10 OF 17

IF A SEAL IS PRESENT ON THIS SHEET IT HAS BEEN ELECTRONICALLY SEALED AND DATED.

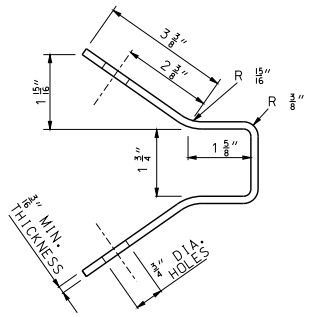


FABRICATION DETAIL

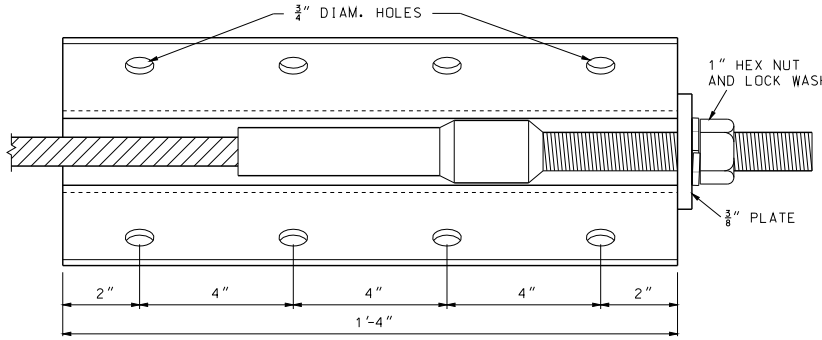


DETAIL C
ASSEMBLED VIEW
(ANCHOR PLATE)

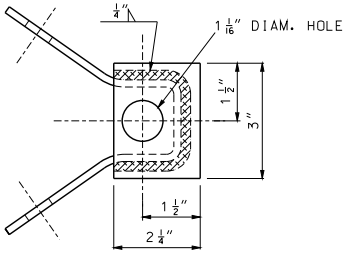


END VIEW

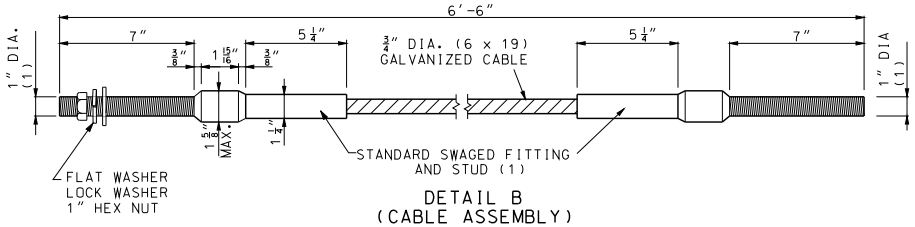


DETAIL B
(CABLE ASSEMBLY)

(1) STUD, THREADED ENTIRE LENGTH.
(2) 6'-3" SPACING FOR TYPE A OR B GUARDRAIL; 3'-1 1/2" SPACING FOR TYPE E GUARDRAIL.
(3) 27" MINIMUM BUT LESS THAN 4' FOR TYPE E GUARDRAIL; 4' MINIMUM FOR TYPE A GUARDRAIL.

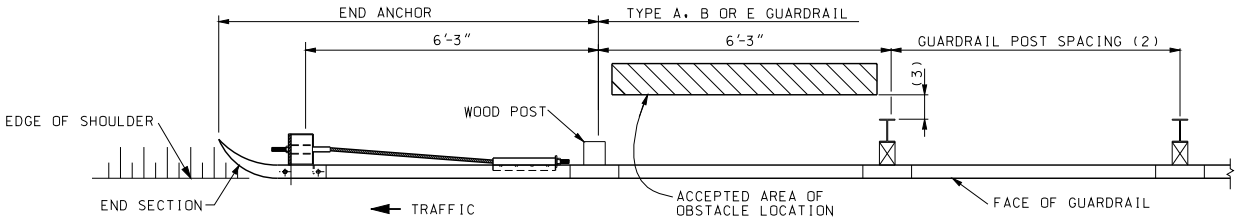


PLAN

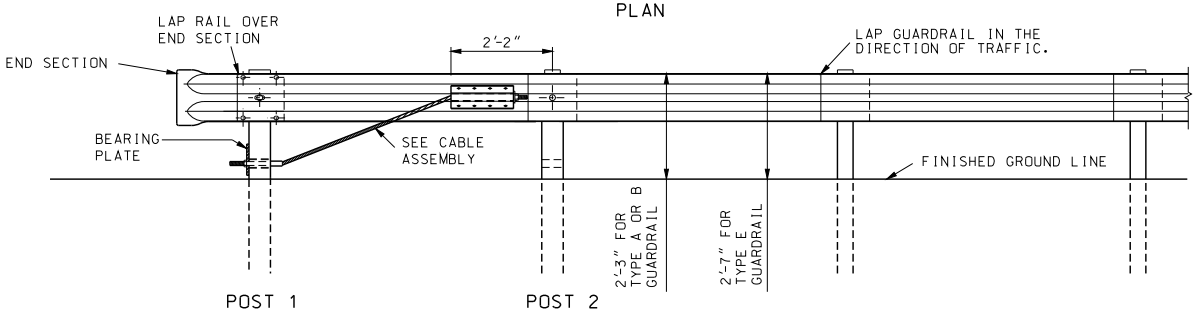


ELEVATION
**END ANCHOR**

IF A SEAL IS PRESENT ON THIS SHEET IT HAS BEEN ELECTRONICALLY SEALED AND DATED.


MISSOURI HIGHWAYS AND TRANSPORTATION COMMISSION
105 WEST CAPITOL
JEFFERSON CITY, MO 65102
1-888-ASK-MODOT (1-888-275-6636)


STATE OF MISSOURI
KATHRYN PHILLIPS HARVEY
NUMBER PE-23751
PROFESSIONAL ENGINEER
THIS SHEET HAS BEEN SIGNED, SEALED AND DATED ELECTRONICALLY.

# GUARDRAIL
## END ANCHOR DETAILS

DATE EFFECTIVE: 02/01/2012
DATE PREPARED: 12/19/2011

606.00AU

SHEET NO.
11 OF 17

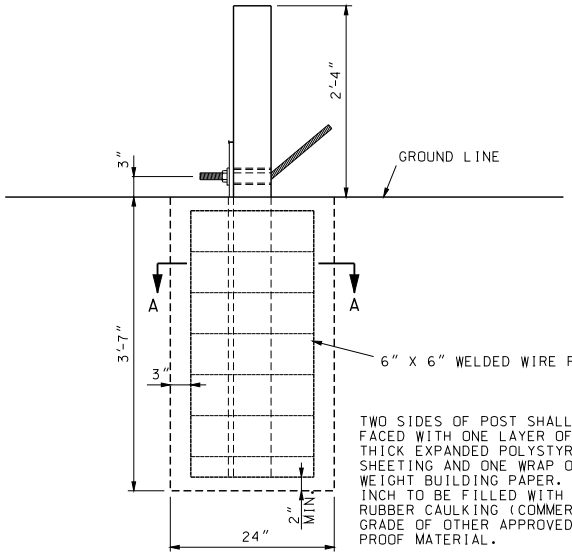


TWO SIDES OF POST SHALL BE FACED WITH ONE LAYER OF $\frac{3}{4}$" THICK EXPANDED POLYSTYRENE FOAM SHEETING AND ONE WRAP OF LIGHT-WEIGHT BUILDING PAPER. TOP ONE INCH TO BE FILLED WITH BUTYL RUBBER CAULKING (COMMERCIAL GRADE OF OTHER APPROVED WATER PROOF MATERIAL.

POST 1

## CONCRETE FOUNDATION FOR END ANCHORS

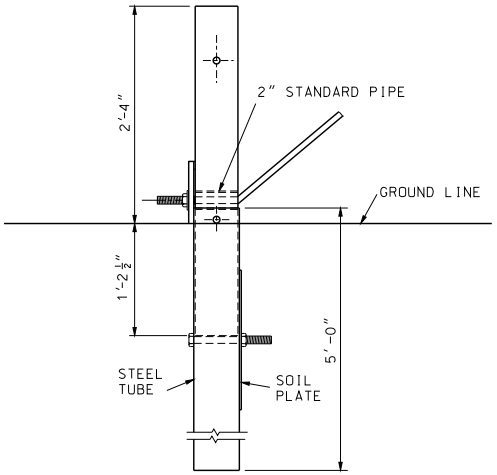


POST 1

## STEEL TUBE FOUNDATION FOR END ANCHORS

BOLTS AND NUTS SHALL BE GALVANIZED IN ACCORDANCE WITH THE REQUIREMENTS OF AASHTO M232, OR THEY MAY BE MECHANICALLY GALVANIZED IN ACCORDANCE WITH AASHTO M232 CLASS C.

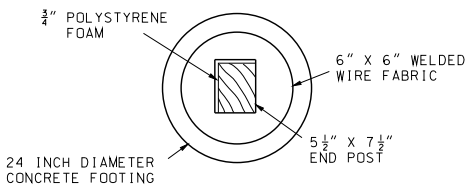


SECTION A-A
EXPANDED POLYSTYRENE FOAM INSTALLATION DETAIL

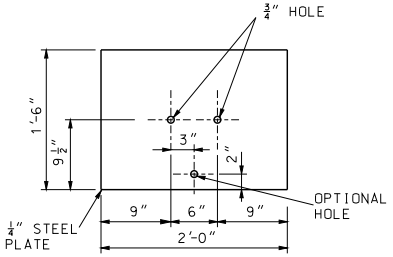


## SOIL PLATE

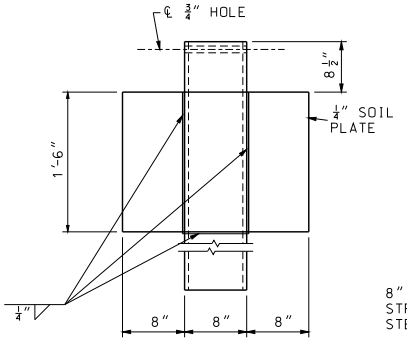


## SHOP WELDED SOIL PLATE CONNECTION

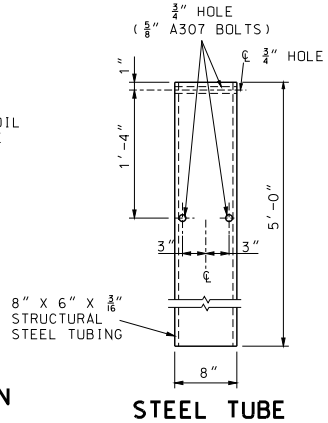


## STEEL TUBE

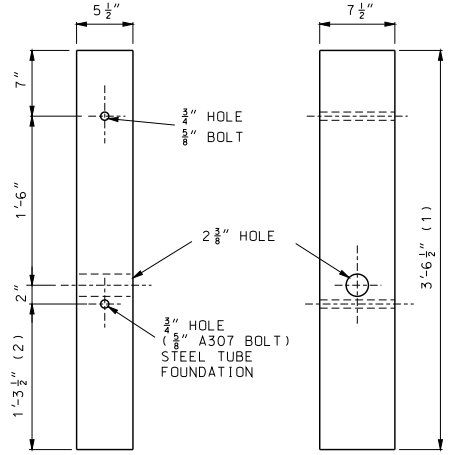


## WOOD BREAKAWAY POST

SEE SECTION 1050

(1) 5'-9½" FOR CONCRETE FOUNDATION ALTERNATE.

(2) 3'-6½" FOR CONCRETE FOUNDATION ALTERNATE.

GENERAL NOTES:

THE CONTRACTOR HAS THE OPTION TO INSTALL WOOD POST 1 AND 2 IN STEEL TUBE OR CONCRETE FOUNDATION.

TRIMMING OF WOOD POST MAY BE NECESSARY FOR STEEL TUBE FOUNDATION.

STEEL TUBE FOUNDATIONS SHALL BE DRILLED AND BACK-FILLED WITH A SUITABLE MATERIAL WHEN THE SOIL PLATE IS BOLTED, AS SHOWN, TO THE STEEL TUBE. STEEL TUBE FOUNDATION MAY BE DRIVEN WHEN THE SOIL PLATE IS WELDED, AS SHOWN, TO THE STEEL TUBE.

MISSOURI HIGHWAYS AND TRANSPORTATION COMMISSION
105 WEST CAPITOL
JEFFERSON CITY, MO 65102
1-888-ASK-MODOT (1-888-275-6636)

STATE OF MISSOURI
KATHRYN PHILLIPS HARVEY
NUMBER PE-23751
PROFESSIONAL ENGINEER
THIS SHEET HAS BEEN SIGNED, SEALED AND DATED ELECTRONICALLY.

# GUARDRAIL

DATE EFFECTIVE: 02/01/2012
DATE PREPARED: 12/19/2011

606.00AU

SHEET NO. 12 OF 17

IF A SEAL IS PRESENT ON THIS SHEET IT HAS BEEN ELECTRONICALLY SEALED AND DATED.

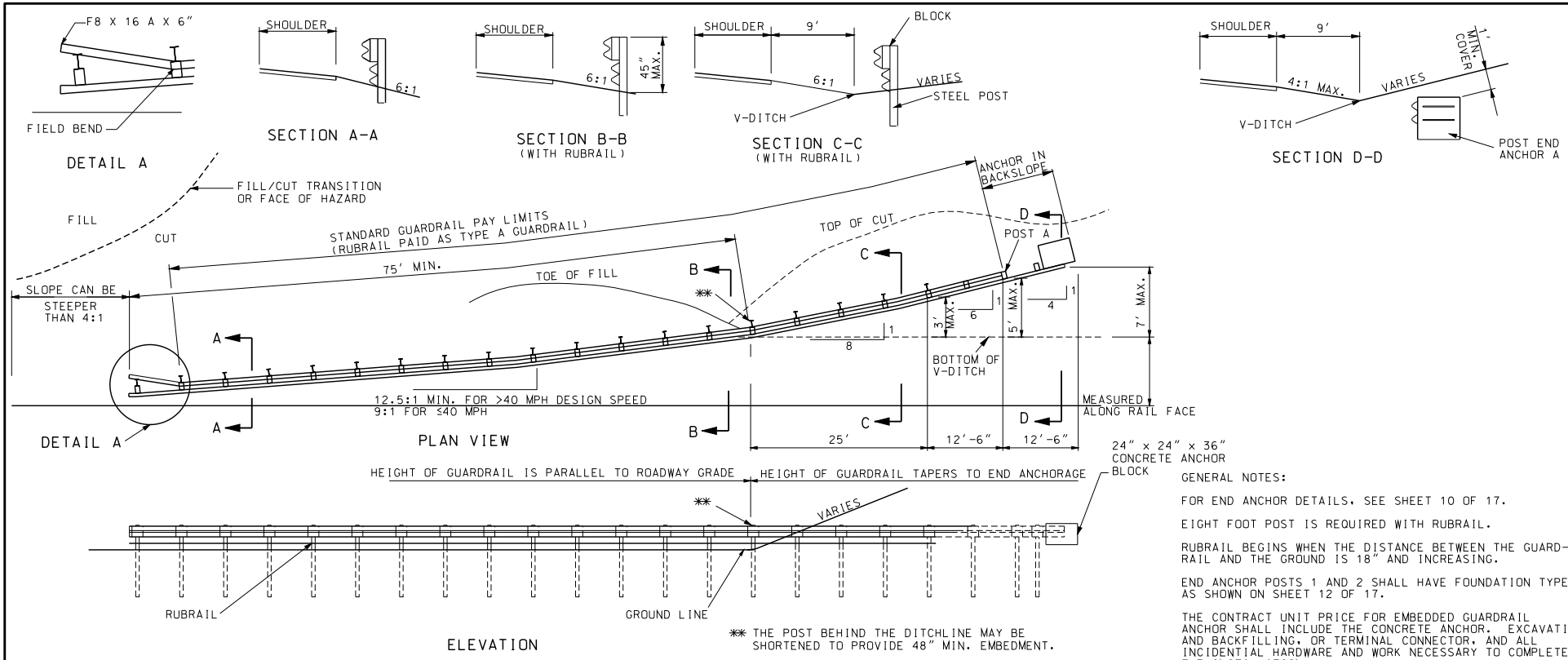


## ANCHORED IN BACKSLOPE GUARDRAIL

GENERAL NOTES:

FOR END ANCHOR DETAILS, SEE SHEET 10 OF 17.

EIGHT FOOT POST IS REQUIRED WITH RUBRAIL.

RUBRAIL BEGINS WHEN THE DISTANCE BETWEEN THE GUARDRAIL AND THE GROUND IS 18" AND INCREASING.

END ANCHOR POSTS 1 AND 2 SHALL HAVE FOUNDATION TYPE AS SHOWN ON SHEET 12 OF 17.

THE CONTRACT UNIT PRICE FOR EMBEDDED GUARDRAIL ANCHOR SHALL INCLUDE THE CONCRETE ANCHOR. EXCAVATION AND BACKFILLING, OR TERMINAL CONNECTOR, AND ALL INCIDENTIAL HARDWARE AND WORK NECESSARY TO COMPLETE THE INSTALLATION.

THE GUARDRAIL SHALL EXTEND 50'± BEYOND THE DITCH LINE AND TERMINATE A MINIMUM OF 12 INCHES BELOW GROUND ELEVATION OF THE BACKSLOPE.

BLOCKOUTS WILL NOT BE REQUIRED FOR ANY POST WHICH WILL BE COMPLETELY BELOW GROUND. THE ALIGNMENT OF SUCH POSTS SHALL BE APPROVED BY THE ENGINEER.

SEE OTHER DRAWINGS AND STANDARD SPECIFICATIONS FOR MATERIAL AND CONSTRUCTION REQUIREMENTS NOT SHOWN.

COST OF SHAPING ROCK FACE FOR PLACING OF TERMINAL CONNECTOR, DRILLING HOLES, FURNISHING AND PLACING BOLTS, WASHERS, CAULKING, ANCHORS AND END SHOE TO BE INCLUDED IN THE PRICE OF GUARDRAIL ANCHOR, ROCK FACE.

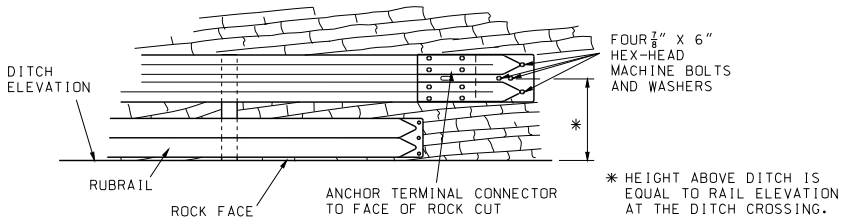


## ROCK FACE GUARDRAIL ANCHOR

MISSOURI HIGHWAYS AND TRANSPORTATION COMMISSION
105 WEST CAPITOL
JEFFERSON CITY, MO 65102
1-888-ASK-MODOT (1-888-275-6636)

STATE OF MISSOURI
KATHRYN PHILLIPS HARVEY
NUMBER PE-23751
PROFESSIONAL ENGINEER
THIS SHEET HAS BEEN SIGNED, SEALED AND DATED ELECTRONICALLY.

# GUARDRAIL
ANCHOR IN BACKSLOPE
WITH V-DITCH
STEEPER THAN 10:1,
4:1 MAX. FORESLOPE

DATE EFFECTIVE: 02/01/2012
DATE PREPARED: 12/19/2011

606.00AU

SHEET NO. 13 OF 17

IF A SEAL IS PRESENT ON THIS SHEET IT HAS BEEN ELECTRONICALLY SEALED AND DATED.

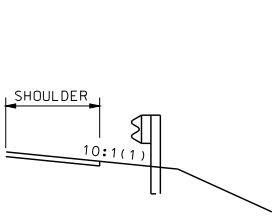


SECTION A-A

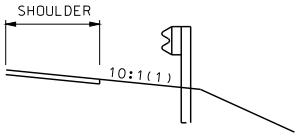


SECTION B-B

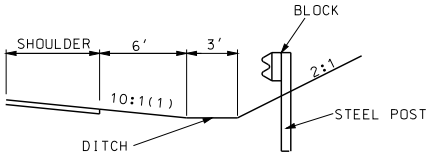


SECTION C-C

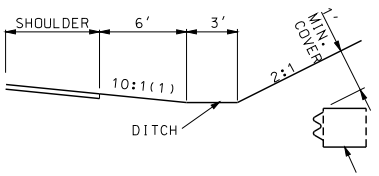


SECTION D-D

CONCRETE BLOCK ANCHOR OR EMBEDDED STEEL POST

(1) MAX. CROSS SLOPE SHALL NOT EXCEED 6:1. RUBRAIL IS REQUIREDWHEN CROSS SLOPE EXCEEDS 10:1 OR WHEN THE DISTANCE BETWEENTHE GUARDRAIL AND THE GROUND IS 18" AND INCREASING.

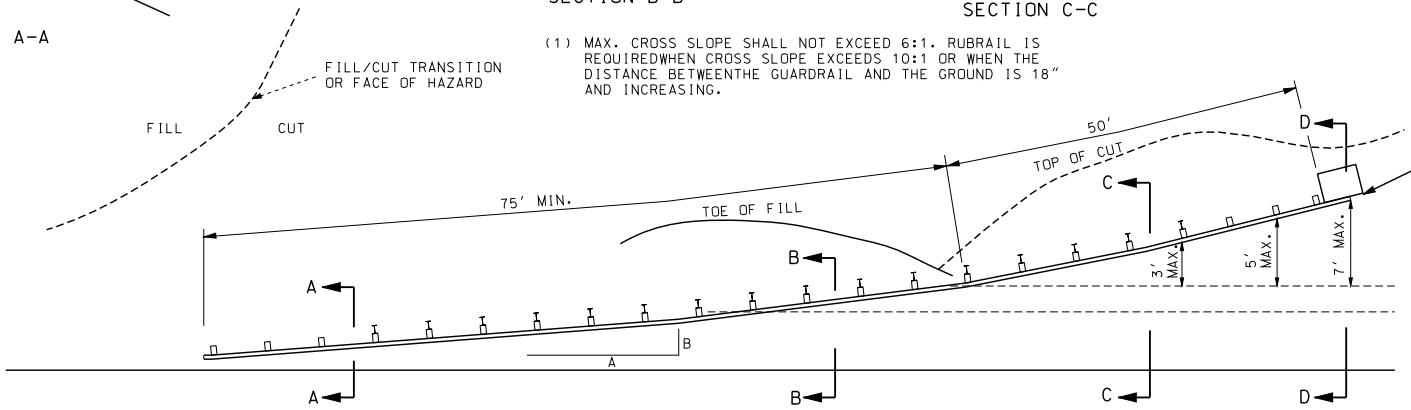


PLAN VIEW

| 10:1 CROSS SLOPE | |
|---|---|
| DESIGN SPEED mph | A:B |
| 70 | 15:1 |
| 60 | 13:1 |
| 55 | 12:1 |
| 50 | 11:1 |
| 45 | 10:1 |
| 40 | 9:1 |
| 30 OR LESS | 7:1 |

| STEEPER THAN 10:1 CROSS SLOPE (1) | |
|---|---|
| DESIGN SPEED mph | A:B |
| 45-70 | 12.5:1 |
| 40 | 9:1 |
| 30 OR LESS | 7:1 |

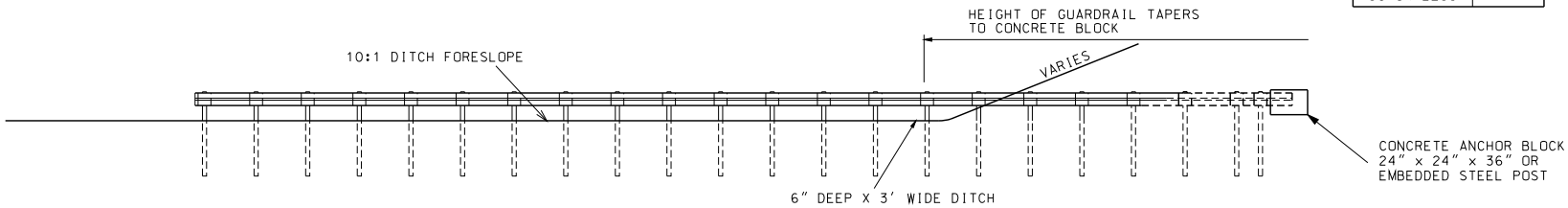


ELEVATION

## ANCHORED IN BACKSLOPE GUARDRAIL

MISSOURI HIGHWAYS AND TRANSPORTATION COMMISSION
105 WEST CAPITOL
JEFFERSON CITY, MO 65102
1-888-ASK-MODOT (1-888-275-6636)

STATE OF MISSOURI
KATHRYN PHILLIPS HARVEY
NUMBER PE-23751
PROFESSIONAL ENGINEER
THIS SHEET HAS BEEN SIGNED, SEALED AND DATED ELECTRONICALLY.

# GUARDRAIL

ANCHOR IN BACKSLOPE WITH FLAT DITCH

DATE EFFECTIVE: 02/01/2012
DATE PREPARED: 12/19/2011

606.00AU

SHEET NO. 14 OF 17

IF A SEAL IS PRESENT ON THIS SHEET IT HAS BEEN ELECTRONICALLY SEALED AND DATED.

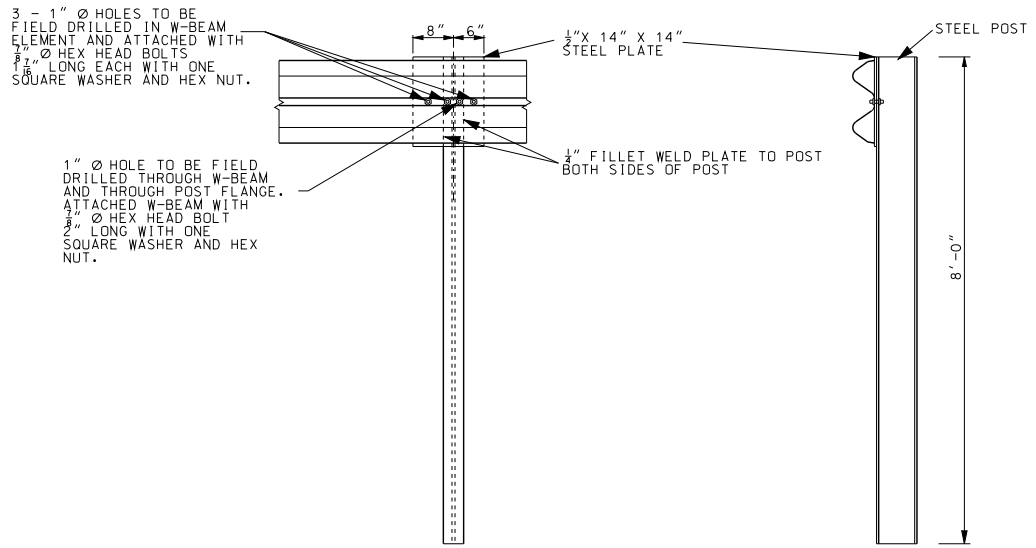


EMBEDDED STEEL POST

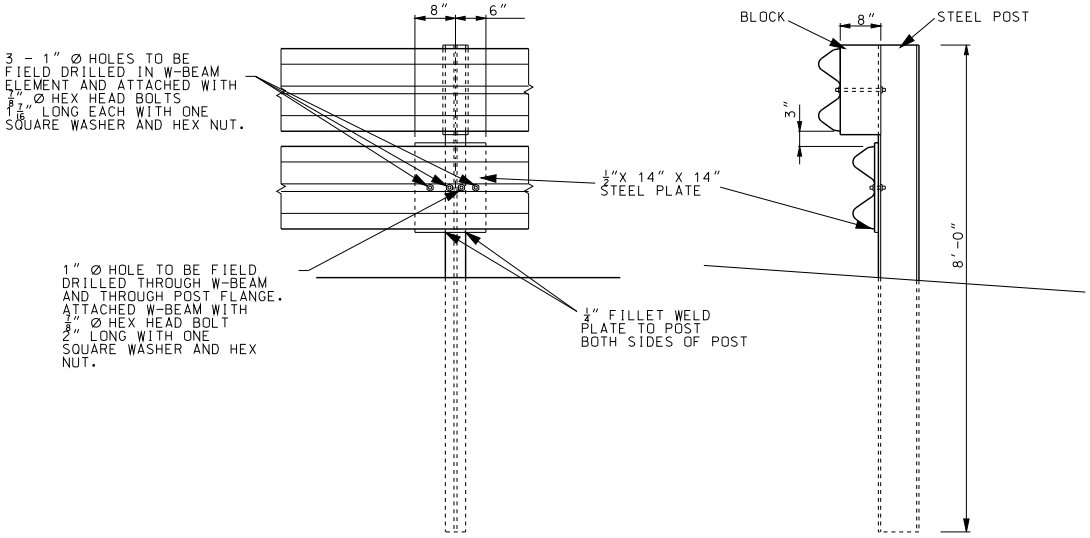


SPECIAL RUBRAIL TO POST CONNECTION AT POST A

IF A SEAL IS PRESENT ON THIS SHEET IT HAS BEEN ELECTRONICALLY SEALED AND DATED.

MISSOURI HIGHWAYS AND TRANSPORTATION COMMISSION
105 WEST CAPITOL
JEFFERSON CITY, MO 65102
1-888-ASK-MODOT (1-888-275-6636)

STATE OF MISSOURI
KATHRYN PHILLIPS HARVEY
NUMBER PE-23751
PROFESSIONAL ENGINEER
THIS SHEET HAS BEEN SIGNED, SEALED AND DATED ELECTRONICALLY.

# GUARDRAIL

ANCHORED IN BACKSLOPE
END ANCHORAGE DETAILS
EMBEDDED STEEL POST OPTION

DATE EFFECTIVE: 02/01/2012
DATE PREPARED: 12/19/2011

606.00AU

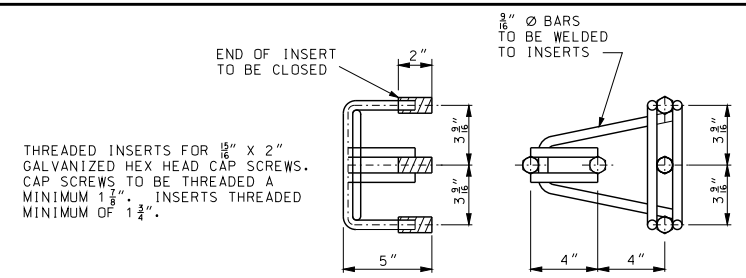


## CONCRETE BLOCK ANCHOR
ANCHOR ASSEMBLY

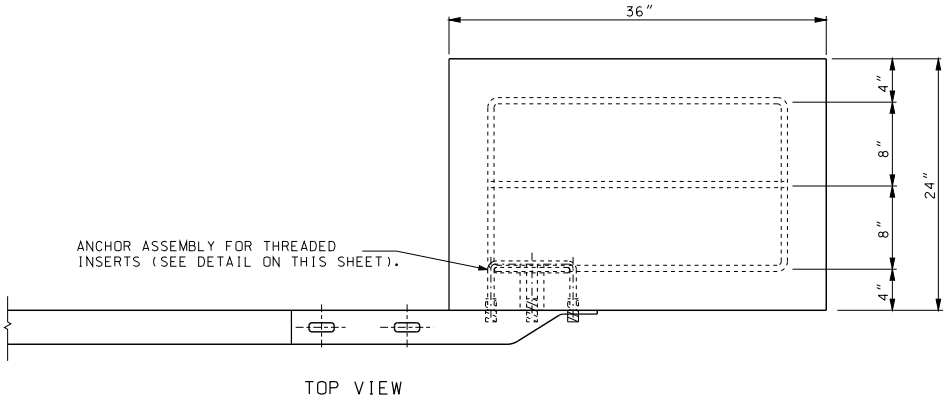


TOP VIEW

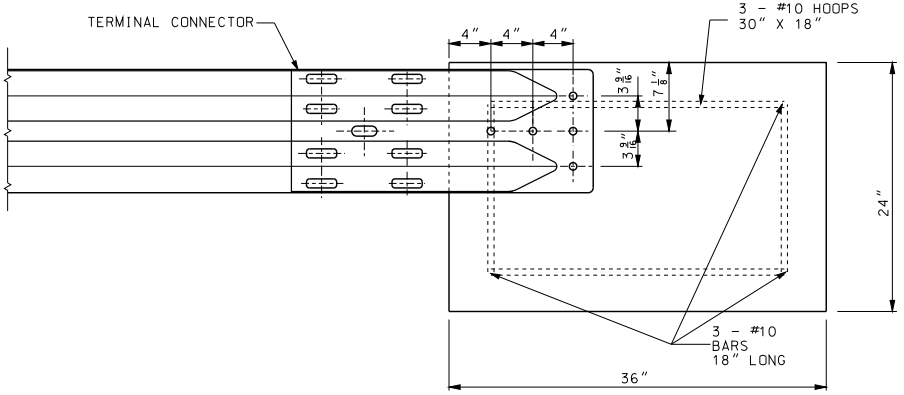


ELEVATION

## CONCRETE BLOCK ANCHOR
(24″ X 24″ X 36″)

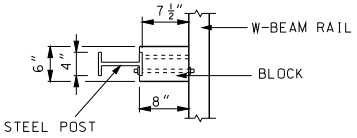


PLAN

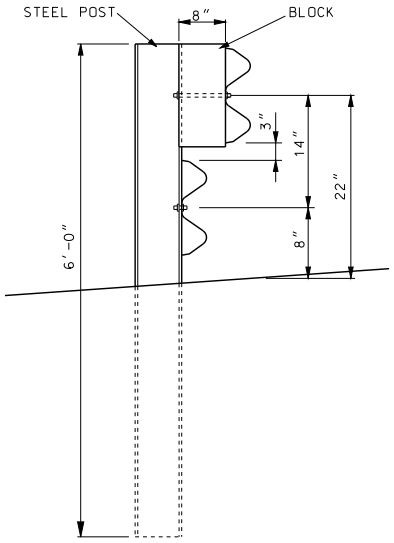


ELEVATION OF 6′ POST

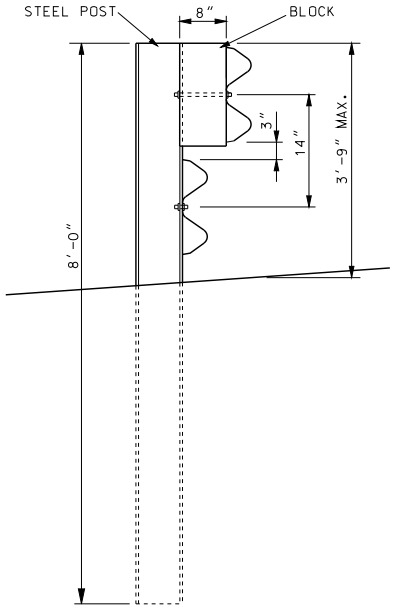


ELEVATION 8′ POST

## STEEL POST AND BLOCK DETAIL

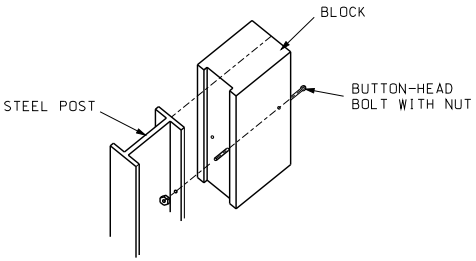


EXPLODED VIEW

(RAIL AND WASHER NOT SHOWN)

IF A SEAL IS PRESENT ON THIS SHEET IT HAS BEEN ELECTRONICALLY SEALED AND DATED.

MISSOURI HIGHWAYS AND TRANSPORTATION COMMISSION
105 WEST CAPITOL
JEFFERSON CITY, MO 65102
1-888-ASK-MODOT (1-888-275-6636)

STATE OF MISSOURI
KATHRYN PHILLIPS HARVEY
NUMBER PE-23751
PROFESSIONAL ENGINEER
THIS SHEET WAS SIGNED, SEALED AND DATED ELECTRONICALLY.

# GUARDRAIL
ANCHORED IN BACKSLOPE
GENERAL DETAILS

DATE EFFECTIVE: 02/01/2012
DATE PREPARED: 12/19/2011

606.00AU

SHEET NO.
16 OF 17

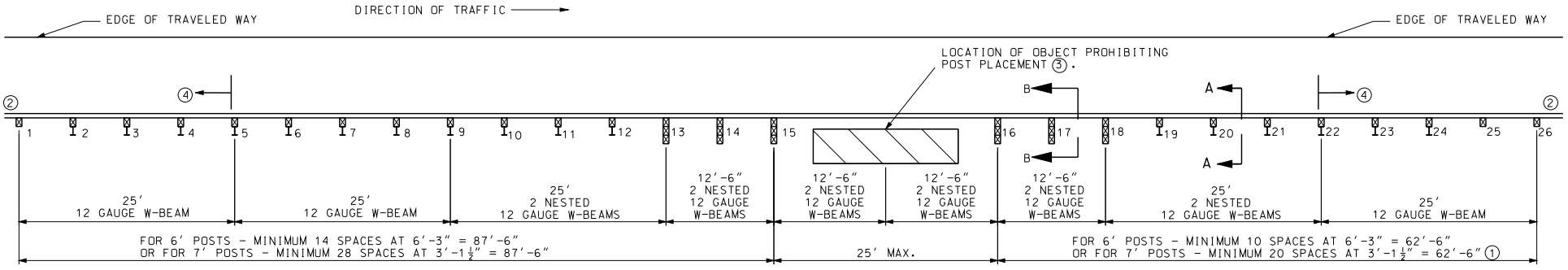


PLAN

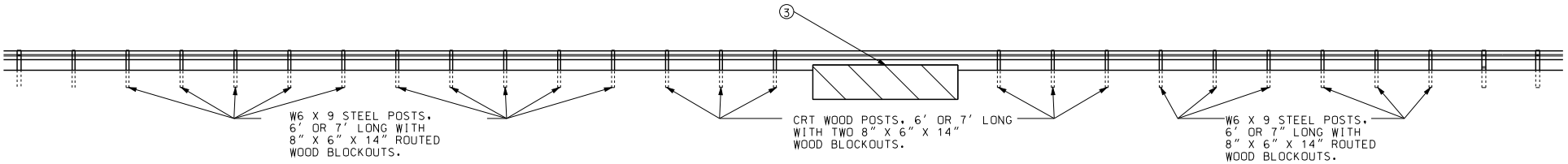


ELEVATION

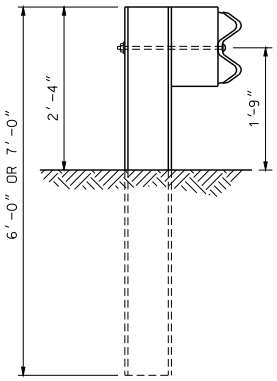


SECTION A-A

W6 X 9 STEEL POSTS, 6' OR 7' LONG WITH 8" X 6" X 14" ROUTED WOOD BLOCKOUTS POSTS 3 THROUGH 12 AND 19 THROUGH 24.

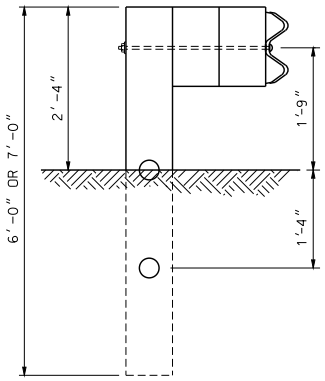


SECTION B-B

CRT WOOD POSTS, 6' OR 7' LONG WITH TWO8" X 6" X 14" WOOD BLOCKOUTS POSTS 13 THROUGH 18.

(1) IF LOCATED WITHIN THE CLEAR ZONE OF A TWO-WAY ROADWAY, THE MINIMUM LENGTH IS 87'-6".

(2) ADDITIONAL GUARDRAIL AS REQUIRED, INCLUDING END TREATMENT.

(3) THE POST MAY BE SKIPPED DUE TO THE PRESENCE OF AN OBSTACLE SUCH AS A CULVERT.

(4) PLACE END TREATMENT NO CLOSER TO THE SKIPPED POST THAN POSTS 5 AND 22.

MISSOURI HIGHWAYS AND TRANSPORTATION COMMISSION
105 WEST CAPITOL
JEFFERSON CITY, MO 65102
1-888-ASK-MODOT (1-888-275-6636)

STATE OF MISSOURI
KATHRYN PHILLIPS HARVEY
NUMBER PE-23751
PROFESSIONAL ENGINEER
THIS SHEET HAS BEEN SIGNED, SEALED AND DATED ELECTRONICALLY.

# GUARDRAIL

## SKIPPING A POST (MODIFIED LONG-SPAN GUARDRAIL SYSTEM)

DATE EFFECTIVE: 02/01/2012
DATE PREPARED: 12/19/2011

606.00AU

SHEET NO. 17 OF 17

IF A SEAL IS PRESENT ON THIS SHEET IT HAS BEEN ELECTRONICALLY SEALED AND DATED.

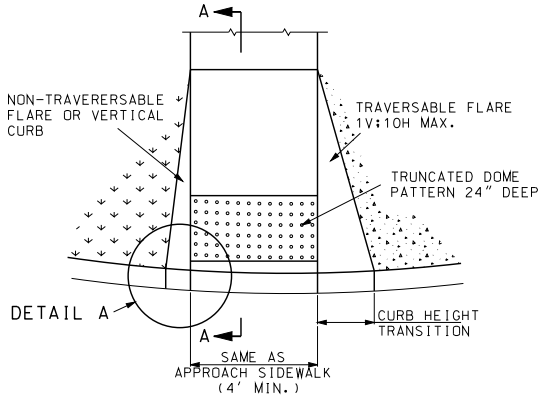


## PERPENDICULAR CONCRETE CURB RAMP

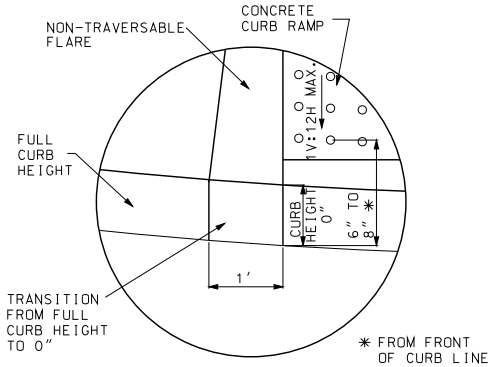


DETAIL A

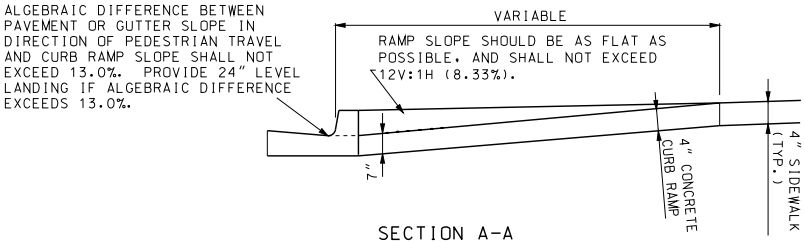


SECTION A-A

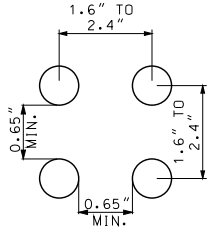


TRUNCATED DOMES SPACING

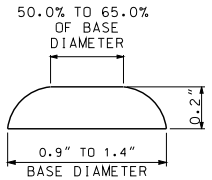


TRUNCATED DOMES CROSS SECTION

NOTES
1. ALL RAMPS SHALL NOT HAVE RUNNING SLOPES GREATER THAN 8.3% OR 1V:12H.
2. CURB RAMP LENGTH NOT REQUIRED TO EXCEED 15 FEET.

GENERAL NOTES:

ALL AREAS OF THE PEDESTRIAN ACCESS ROUTE MUST BE COMPLIANT WITH THE "AMERICANS WITH DISABLILITES ACT ACCESSIBLILITY GUIDELINES (ADAAG)". EXCEPTIONS MUST BE APPROVED BY THE ENGINEER. ALL OTHER AREAS OF (NON-COMPLIANCE SHALL BE REMOVED AND CORRECTED AT THE CONTRACTOR'S EXPENSE.

FINISHED SIDEWALK SHALL BE STABLE, SLIP RESISTANT AND SURFACE DOES NOT POND WATER.

SIDEWALK AND RAMP CROSS SLOPES SHALL BE A MINIMUM OF 1.0% TO FACILITATE DRAINAGE AND A MAXIMUM OF 2.0% TO BE USABLE FOR DISABLED INDIVIDUALS.

STORMWATER INLETS, SIGNS, POSTS, MANHOLE COVERS, PULL BOXES AND OTHER ACCESS LIDS SHOULD BE AVOIDED WITHIN THE SIDEWALK. IF SUCH A LOCATION IS NECESSARY, THE FEATURE MUST MEET ADA STANDARDS.

THE RUNNING GRADE OF A SIDEWALK SHALL NOT EXCEED 5.0% UNLESS IT IS MATCHING THE GRADE OF THE ADJACENT ROADWAY.

PEDESTRIAN ACCESS ROUTE SHALL CONTINUE ACROSS DRIVEWAYS.

LANDINGS SHALL BE CONSTRUCTED AT THE TOP AND/OR BOTTOM OF A CURB RAMP WHEREVER A TURNING MOVEMENT OR ACCESS TO PEDESTRIAN PUSH BUTTON IS REQUIRED.

LANDINGS LOCATED IN THE ROADWAY MUST BE COMPLETELY CONTAINED WITHIN THE CROSSWALK.

SIDE FLARES OF CURB RAMPS, IN THE PATH OF PEDESTRIAN TRAVEL (TRAVERSABLE), SHALL NOT EXCEED A SLOPE OF 1V:10H. SIDE FLARES OUTSIDE THE PEDESTRIAN PATH NONTRAVERSABLE) MAY BE 1V:2H OR VERTICAL.

TRANSITION FROM SIDEWALK TO GUTTER TO ROADWAY MUST BE FLUSH.

DETECTABLE WARNINGS (TRUNCATED DOMES) SHALL BE PREFORMED AND INSTALLED AS PER MANUFACTURER'S RECOMENDATIONS. STAMPED CONCRETE WILL NOT BE ACCEPTED.

THE DETECTABLE WARNING SURFACE SHALL CONTRAST VISUALLY WITH ADJOINING SURFACES, EITHER LIGHT-ON-DARK OR DARK-ON-LIGHT. TRUNCATED DOMES SHALL SPAN THE FULL WIDTH (WTHIN 2") OF THE RAMP OR LANDING.

DETECTABLE WARNING DOMES SHALL BE ALIGNED PARALLEL TO THE SLOPE WHEN INSTALLED ON A RAMP. WHEN INSTALLED ON A LANDING OR BLEND TRANSITION, THEY SHALL BE ALIGNED PERPENDICULAR OR RADIAL TO THE BREAK BETWEEN THE RAMP, LANDING OR BLENDED TRANSITION AND THE STREET.

WHEN IT IS TECHNICALLY INFEASIBLE TO CONSTRUCT 1V:12H RAMP SLOPE, WHILE ALTERING EXISTING PEDESTRIAN FACILITIES, A SLOPE BETWEEN 1V:12H AND 1V:10H IS PERMISSIBLE FOR A MAXIMUM RISE OF 6", AND A SLOPE BETWEEN 1V:10H AND 1V:8H IS PERMISSIBLE FOR A MAXIMUM RISE OF 3".

IF CONSTRUCTION OF 5' X 5' LANDING IS NOT FEASIBLE, 4' X 4' LANDING MAY BE USED.

IF A SEAL IS PRESENT ON THIS SHEET IT HAS BEEN ELECTRONICALLY SEALED AND DATED.

MISSOURI HIGHWAYS AND TRANSPORTATION COMMISSION
105 WEST CAPITOL
JEFFERSON CITY, MO 65102
1-888-ASK-MODOT (1-888-275-6636)

STATE OF MISSOURI
KATHRYN PHILLIPS HARVEY
NUMBER PE-23751
PROFESSIONAL ENGINEER
THIS SHEET HAS BEEN SIGNED, SEALED AND DATED ELECTRONICALLY.

# CONCRETE SIDEWALK AND CURB RAMPS

| DATE EFFECTIVE: | 10/01/2009 | 608.10N | SHEET NO. |
|---|---|---|---|
| DATE PREPARED: | 10/18/2011 | | 2 OF 4 |

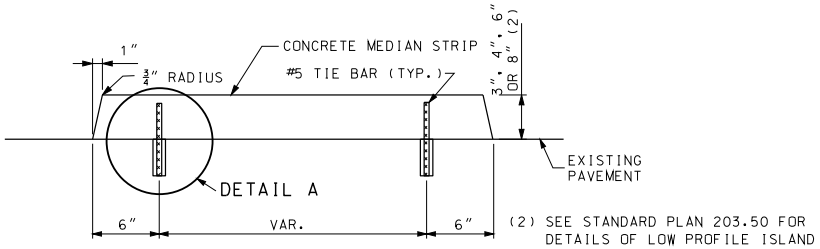


(2) SEE STANDARD PLAN 203.50 FOR DETAILS OF LOW PROFILE ISLAND

SECTION A-A
CONCRETE MEDIAN STRIP

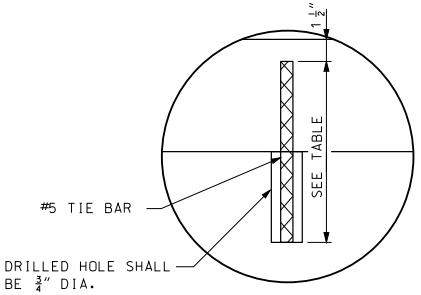


DETAIL A

| MEDIAN HEIGTH | BAR LENGTH |
|---|---|
| 3" | 8" |
| 4" | 9" |
| 6" | 11" |
| 8" | 13" |

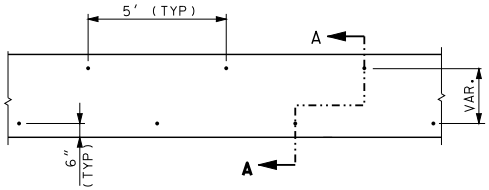


TIE BAR LOCATIONS FOR
CONCRETE MEDIAN STRIP

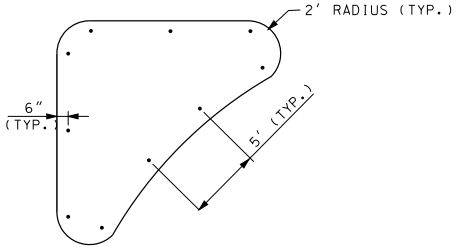


TIE BAR LOCATIONS FOR
CONCRETE MEDIAN STRIP (ISLAND)

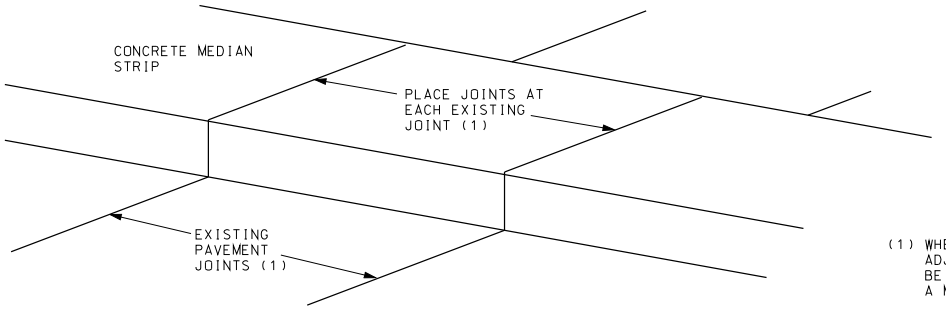


CONCRETE MEDIAN STRIP JOINT LOCATION

(1) WHEN THERE ARE NO VISIBLE JOINTS IN THE ADJACENT PAVEMENT. THE JOINT SPACING WILL BE EQUAL TO THE MEDIAN STRIP WIDTH, WITH A MINIMUM SPACING OF 10'.

GENERAL NOTES:

TIE BARS SHALL BE EPOXY COATED, DEFORMED REINFORCING BARS MEETING THE REQUIREMENTS OF SECTION 710 AND 1057.

BONDING FOR TIE BARS SHALL BE EPOXY OR POLYESTER BONDING AGENTS AS SPECIFIED IN SECTION 1039.

THE FACE OF THE MEDIAN MAY BE CONSTRUCTED WITHOUT BATTER WHEN CONSTRUCTED ON A RADIUS OF 6' OR LESS.

WHEN CONCRETE MEDIANS ARE CONSTRUCTED DIRECTLY BENEATH GUARDRAIL, THE MEDIAN HEIGHT WILL BE 4".

IF A SEAL IS PRESENT ON THIS SHEET IT HAS BEEN ELECTRONICALLY SEALED AND DATED.

MISSOURI HIGHWAYS AND TRANSPORTATION COMMISSION
105 WEST CAPITOL
JEFFERSON CITY, MO 65102
1-888-ASK-MODOT (1-888-275-6636)

STATE OF MISSOURI
KATHRYN PHILLIPS HARVEY
NUMBER PE-23751
PROFESSIONAL ENGINEER
THIS SHEET HAS BEEN SIGNED, SEALED AND DATED ELECTRONICALLY.

# CONCRETE MEDIAN STRIP

DATE EFFECTIVE: 02/01/2011
DATE PREPARED: 3/9/2011

608.30A

SHEET NO. 1 OF 1

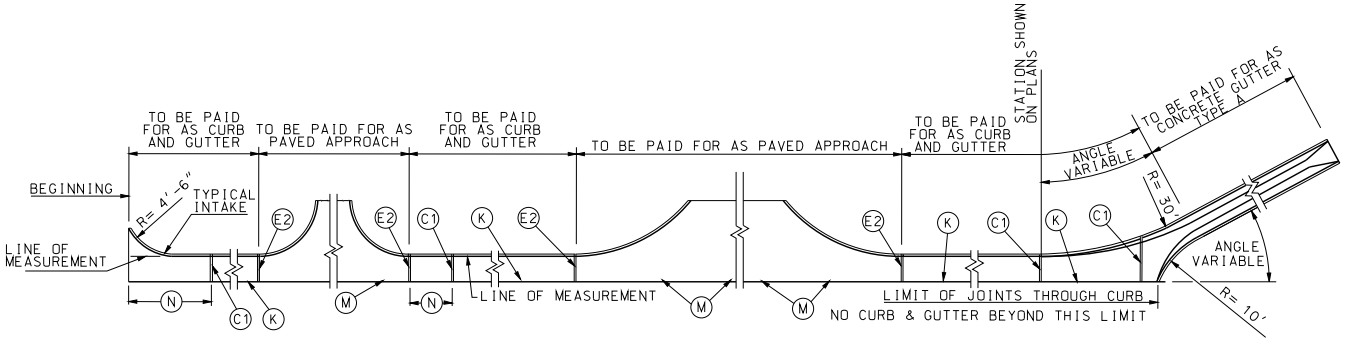


## PLAN OF MEASUREMENT OF CURB & GUTTER AND JOINT PLAN

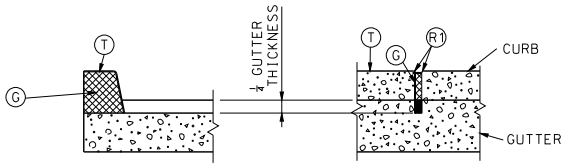


(C1) JOINT

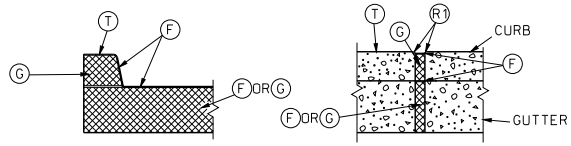


(E2) JOINT

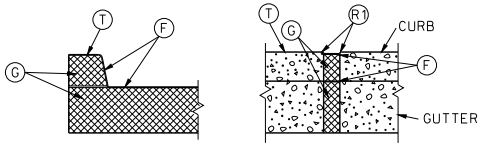


(E1) JOINT

LEGEND

- (C1) 1/8" MAXIMUM WIDTH TRANSVERSE CONTRACTION JOINT (PREFORMED OR SAWED).
- (E1) 2" TRANSVERSE EXPANSION JOINT. (PREFORMED OR SAWED)
- (E2) 1/2" TRANSVERSE EXPANSION JOINT. (PREFORMED OR SAWED)
- (F) FILLER FOR JOINTS - HOT POURED.
- (G) PREFORMED JOINT FILLER MATERIAL.
- (K) TONGUE & GROOVE JOINT WITH TIE BAR - SEE DETAIL.
- (M) TONGUE & GROOVE JOINT WITHOUT TIE BARS - SEE DETAIL.
- (N) NOT LESS THAN 10' OR MORE THAN 30'.
- (T) TOP OF CURB.
- (R1) ROUND TO 1/4" RADIUS. (EXCEPT FOR SAWED JOINTS)

GNERAL NOTES:

A MINIMUM 4" TYPE 1 OR 5 AGGREGATE BASE SHALL BE PLACED BENEATH ALL CURB AND GUTTER SECTIONS AND INCLUDED WITHIN THE MAINLINE BASE PAY LIMITS.

WHEN CURBS ARE CONSTRUCTED DIRECTLY BENEATH GUARDRAIL, CURB HEIGHT SHALL BE 4 INCH BARRIER CURB, AS SHOWN ON STANDARD PLAN 606.00.

CURB, GUTTER AND CURB AND CUTTER CONSTRUCTED ALONG AND ATTACHED TO CONCRETE PAVEMENT OR BASE SHALL HAVE:

1. JOINT (C1) ONE-QUARTER DEPTH OF CURB AND GUTTER THICKNESS AS A CONTINUATION OF EACH CONTRACTION JOINT IN THE BASE OR PAVEMENT.
2. JOINT (E1) AS CONTINUATION OF 2" EXPANSION JOINT (E) IN THE CONCRETE BASE OR PAVEMENT SHALL EXTEND AND CONTINUE THROUGH THE CURB, CUTTER AND CURB AND GUTTER.
3. JOINT (E2) THROUGH CURB AND CURB AND CUTTER AT THE BEGINNING AND END OF EACH PAVED APPROACH.

CURB, CURB AND GUTTER AND GUTTER CONSTRUCTED APART OR SEPARATED FROM CONCRETE BASE OR PAVEMENT OR AS A FORM FOR ASPHALTIC CONCRETE PAVEMENT SHALL HAVE A JOINT (E2) ENTIRELY THROUGH THE CURB, CURB AND GUTTER AND GUTTER, AT THE BEGINNING AND END OF EACH "PAVED APPROACH" AND A JOINT (C1) TO 1/4 DEPTH OF CURB AND GUTTER THICKNESS AT INTERVALS OF 30 FEET BETWEEN APPROACHES.

JOINTS (E1) AND (E2) THROUGH CURB SHALL BE FILLED WITH PREFORMED FILLER MATERIAL AND SEALED WITH HOT POURED FILLER FOR JOINTS.

JOINT (E1) IN GUTTER SHALL BE FILLED WITH PREFORMED FILLER AND SEALED WITH HOT FILLER MATERIAL.

JOINT (E2) IN GUTTER SHALL BE FILLED WITH PREFORMED FILLER AND SEALED WITH FILLER OR FILLED WITH HOT POURED FILLER.

PREFORMED FILLER MATERIAL SHALL BE PLACED TO PROVIDE 1" HOT POURED FILLER FOR JOINTS.

THE BARRIER CLASS CURBS MAY BE CONSTRUCTED WITHOUT BATTER WHEN CONSTRUCTED ON A RADIUS OF 6 FEET OR LESS. THE (R2) WILL BE REQUIRED.

WHERE A SIDEWALK INTERSECTS A CURB, THE SIDEWALK SHALL BE RAMPED NO STEEPER THAN 12:1 SLOPE TO PROVIDED ACCESS FOR WHEELCHAIR ACROSS APPROACHES.

WHEN ALLOWED BY THE ENGINEER, TYPES A AND B GUTTER MAY BE PRECAST TO CONFORM TO THE DIMENSIONS SHOWN. THE PRECASTER SHALL SUBMIT SHOP DRAWINGS INDICATING THE SECTION LENGTH. SECTION CONNECTION, AND PROPOSED JOINT SEALING SYSTEM. WHEN PRECAST SECTIONS CANNOT CONFORM TO ANY VERTICAL OR HORIZONTAL CURVE DESIGNATED ON THE PLANS. THE GUTTER SHALL BE CAST-IN-PLACE. A COMBINATION OF CAST-IN-PLACE AND PRECAST GUTTER MAY BE PERMITTED.


MISSOURI HIGHWAYS AND TRANSPORTATION COMMISSION
105 WEST CAPITOL
JEFFERSON CITY, MO 65102
1-888-ASK-MODOT (1-888-275-6636)


STATE OF MISSOURI
KATHRYN PHILLIPS HARVEY
NUMBER PE-23751
PROFESSIONAL ENGINEER
THIS SHEET HAS BEEN SIGNED, SEALED AND DATED ELECTRONICALLY.

# CONCRETE CURB, CURB AND GUTTER AND GUTTER

| DATE EFFECTIVE: | 08/01/2008 | 609.00P | SHEET NO. |
|---|---|---|---|
| DATE PREPARED: | 12/29/2011 | | 1 OF 2 |

IF A SEAL IS PRESENT ON THIS SHEET IT HAS BEEN ELECTRONICALLY SEALED AND DATED.

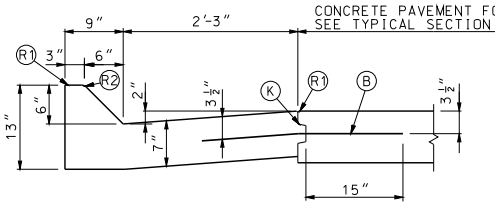


TYPE A
(MOUNTABLE)

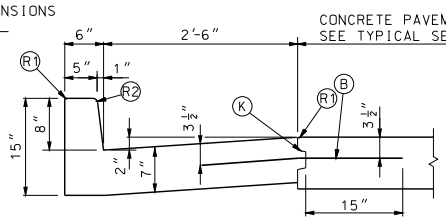


TYPE B
(BARRIER)

## CURB & GUTTER

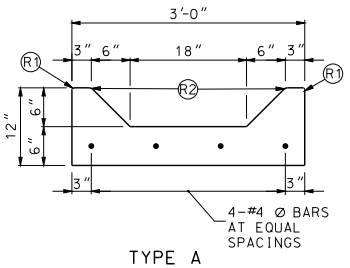


TYPE A

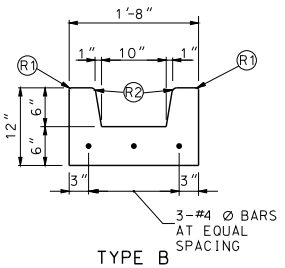


TYPE B

## GUTTERS

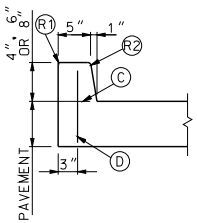


TYPE A
(INTEGRAL)

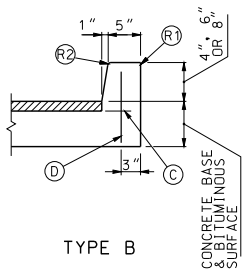


TYPE B

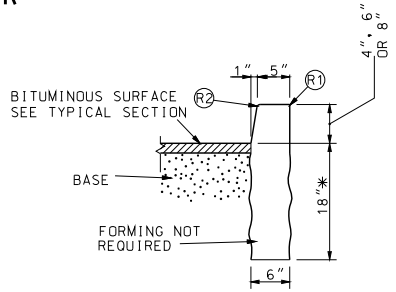


TYPE S
(SEPARATED)

* DEPTH MAY BE REDUCED IF KEYED 6" IN ROCK

## BARRIER CURBS

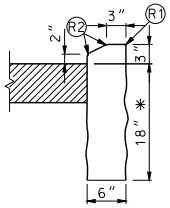


TYPE F
(SEPARATED)

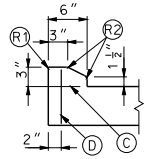


TYPE E
(INTEGRAL)

BEGINNING AND ENDINGS OF INTROCUCED LOW PROFILE CURBS SHALL UTILIZE CURB HEIGHT RUNOUT FORM 0 INCH TO 3 INCHES IN 5 FEET PAYMENT. LENGTH SHALL INCLUDE TAPERS.

* DEPTH MAY BE REDUCED IF KEYED 6" IN ROCK.

## LOW PROFILE CURB

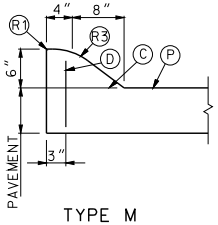


TYPE M
(INTEGRAL)

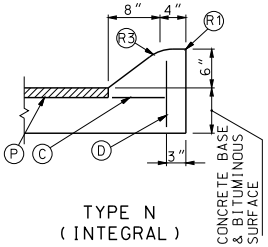


TYPE N
(INTEGRAL)

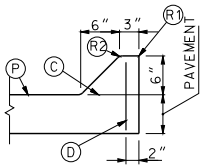


TYPE O
(INTEGRAL)

## MOUNTABLE CURBS

LEGEND

- (B) TIE BARS - 30" X #5 Ø AT 30" CTRS.
- (C) PERMISSIBLE CONSTRUCTION JOINT. IF CONSTRUCTED IN THIS MANNER TIE BARS MUST BE USED.
- (D) #4 Ø TIE BAR AT 24" CENTERS LENGTH OF THE TIE BARS EQUALS THICKNESS OF PAVEMENT PLUS HEIGHT OF CURB, LESS 3 INCHES.
- (K) TONGUE & GROOVE JOINT WITH TIE BAR - SEE DETAIL.
- (P) TOP OF PAVEMENT OR CONCRETE BASE.
- (R1) ROUND TO ¼" RADIUS. (EXCEPT FOR SAWED JOINTS)
- (R2) ROUND TO ¾" RADIUS.
- (R3) CONSTRUCT TO 9" RADIUS

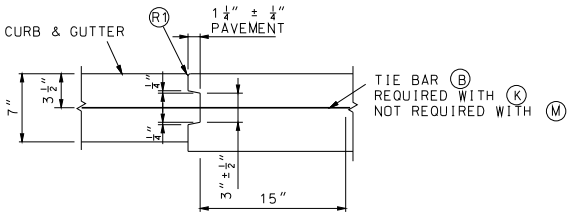


## THRU TONGUE & GROOVE JOINT

MISSOURI HIGHWAYS AND TRANSPORTATION COMMISSION
105 WEST CAPITOL
JEFFERSON CITY, MO 65102
1-888-ASK-MODOT (1-888-275-6636)

STATE OF MISSOURI
KATHRYN PHILLIPS HARVEY
NUMBER PE-23751
PROFESSIONAL ENGINEER
THIS SHEET HAS BEEN SIGNED, SEALED AND DATED ELECTRONICALLY.

# CONCRETE CURB, CURB AND GUTTER AND GUTTER

| DATE EFFECTIVE: | 08/01/2008 | 609.00P | SHEET NO. 2 OF 2 |
|---|---|---|---|
| DATE PREPARED: | 8/26/2009 | | |

IF A SEAL IS PRESENT ON THIS SHEET IT HAS BEEN ELECTRONICALLY SEALED AND DATED.

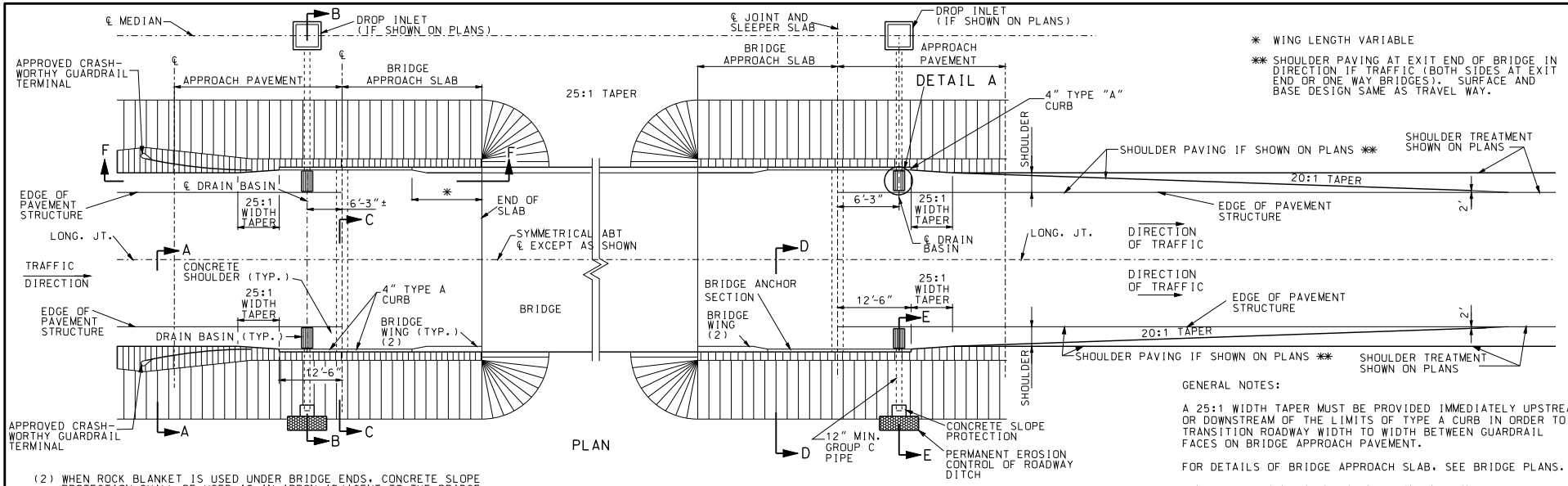


PLAN

* WING LENGTH VARIABLE

** SHOULDER PAVING AT EXIT END OF BRIDGE IN DIRECTION IF TRAFFIC (BOTH SIDES AT EXIT END OR ONE WAY BRIDGES). SURFACE AND BASE DESIGN SAME AS TRAVEL WAY.

(2) WHEN ROCK BLANKET IS USED UNDER BRIDGE ENDS, CONCRETE SLOPE PROTECTION SHALL BE USED AS AN APRON ADJACENT TO THE BRIDGE WING WALLS, AS SHOWN ON STANDARD PLAN 611.60.

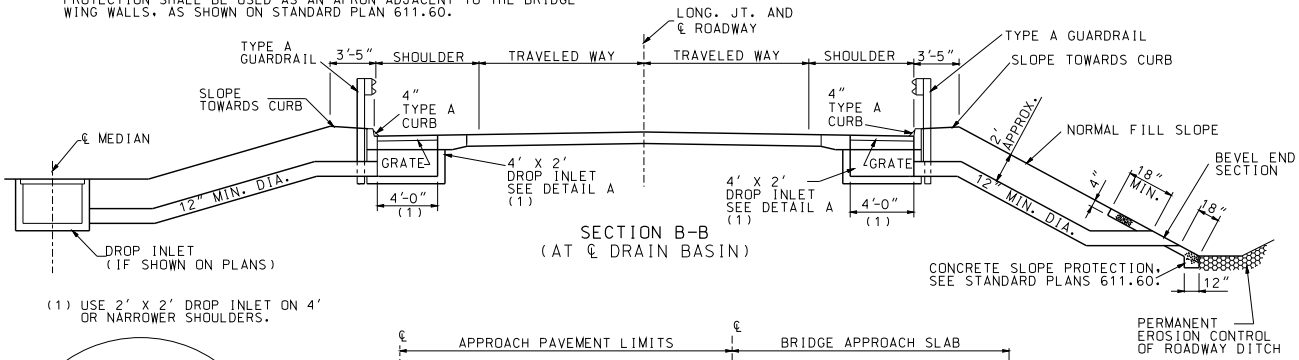


SECTION B-B
(AT ℄ DRAIN BASIN)

(1) USE 2' X 2' DROP INLET ON 4' OR NARROWER SHOULDERS.

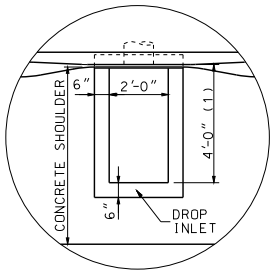


DETAIL A

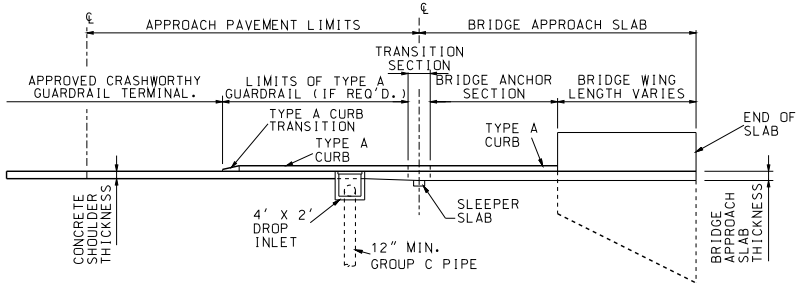


SECTION F-F

NOTE:
DETAILS OF APPROVED CRASHWORTHY GUARDRAIL TERMINAL. TYPE A GUARDRAIL, TRANSITION SECTION AND BRIDGE ANCHOR SECTION ARE NOT SHOWN FOR CLARITY.

GENERAL NOTES:

A 25:1 WIDTH TAPER MUST BE PROVIDED IMMEDIATELY UPSTREAM OR DOWNSTREAM OF THE LIMITS OF TYPE A CURB IN ORDER TO TRANSITION ROADWAY WIDTH TO WIDTH BETWEEN GUARDRAIL FACES ON BRIDGE APPROACH PAVEMENT.

FOR DETAILS OF BRIDGE APPROACH SLAB, SEE BRIDGE PLANS.

CONSTRUCT DRAIN BASINS WHEN SHOWN ON PLANS.

TYPE A CURB IS TO BE CONSTRUCTED ON CONCRETE APPROACH PAVEMENT ONLY WHEN DRAIN BASINS ARE REQUIRED. SEE STANDARD PLANS 609.00 FOR TYPE A CURB.

SEE STANDARD PLANS 504.00 FOR DETAILS OF CONCRETE APPROACH PAVEMENT.

FOR DETAILS OF GRATES, BEARING PLATES FOR DROP INLET, SEE STANDARD PLANS 614.10 AND 614.11.

IF REQUIRED, TYPE A GUARDRAIL SHALL BE USED FROM THE END OF THE TRANSITION SECTION FOR THE BRIDGE ANCHOR SECTION TO THE TERMINATION OF THE TYPE A CURB.

SEE STANDARD PLANS 731.10 FOR DETAILS OF DROP INLET. USE TYPE A FOR LOCATION OF DROP INLET. DEPTH OF DROP INLET AS SHOWN ON ROADWAY PLANS.

PAYMENT FOR DROP INLET, GRATE, GROUP C PIPE, CONCRETE SLOPE PROTECTION AT PIPE OUTLETS, MATERIAL AND INSTALLATION WILL BE PAID FOR AT THE CONTRACT UNIT PRICE FOR DRAIN BASIN PER EACH.

FOR DETAILS OF SECTION A-A, C-C, D-D AND E-E, SEE SHEET 2 OF 2.

MISSOURI HIGHWAYS AND TRANSPORTATION COMMISSION
105 WEST CAPITOL
JEFFERSON CITY, MO 65102
1-888-ASK-MODOT (1-888-275-6636)

STATE OF MISSOURI
KATHRYN PHILLIPS HARVEY
NUMBER PE-23751
PROFESSIONAL ENGINEER
THIS SHEET HAS BEEN SIGNED, SEALED AND DATED ELECTRONICALLY.

# DRAIN BASIN, SHOULDER PAVING AND FILL SLOPES AT BRIDGE ENDS

| DATE EFFECTIVE: | 02/01/2009 | 609.40P | SHEET NO. |
|---|---|---|---|
| DATE PREPARED: | 9/3/2010 | | 1 OF 2 |

IF A SEAL IS PRESENT ON THIS SHEET IT HAS BEEN ELECTRONICALLY SEALED AND DATED.

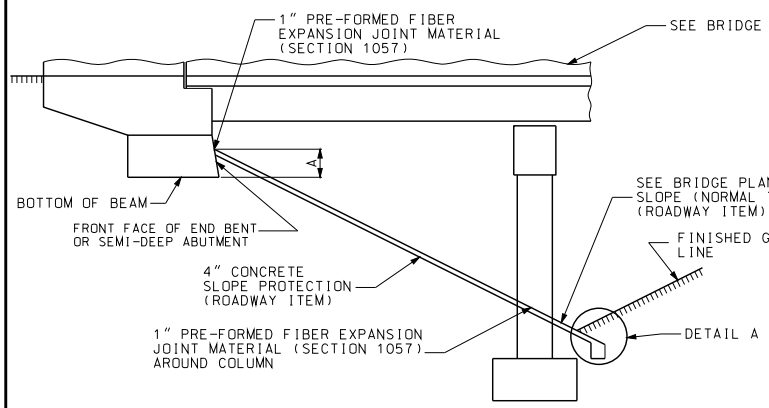


ELEVATION
(STRAIGHT SLOPE TYPE)

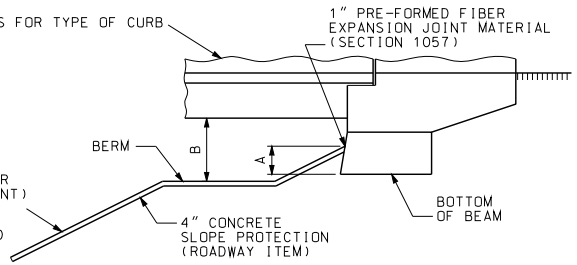


ELEVATION
(USE ON STRUCTURES WITHOUT PASSIVE PRESSURE BERM)

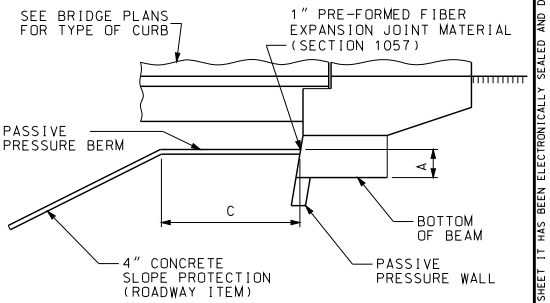


ELEVATION
(USE ON STRUCTURES WITH PASSIVE PRESSURE BERM)

A - SEE BRIDGE PLANS

B - BERM SHALL BE CONSTRUCTED TO ELEVATION SHOWN ON PLANS WITH A MINIMUM OF 4'-0" BELOW BOTTOM OF SUPERSTRUCTURE.

C - DIMENSION OF BERM (SEE BRIDGE PLANS).

(1) SLOPE $\frac{1}{4}$" PER FOOT MINIMUM.
(2) PROTECTION SHALL BE PLACED IN CONTINUOUS PANELS FROM TOE OF THE SLOPE TO THE TOP OF THE SLOPE.
(3) SLOPE PROTECTION SHALL FOLLOW THE CONTOUR OF THE FINAL ROADWAY FILL.

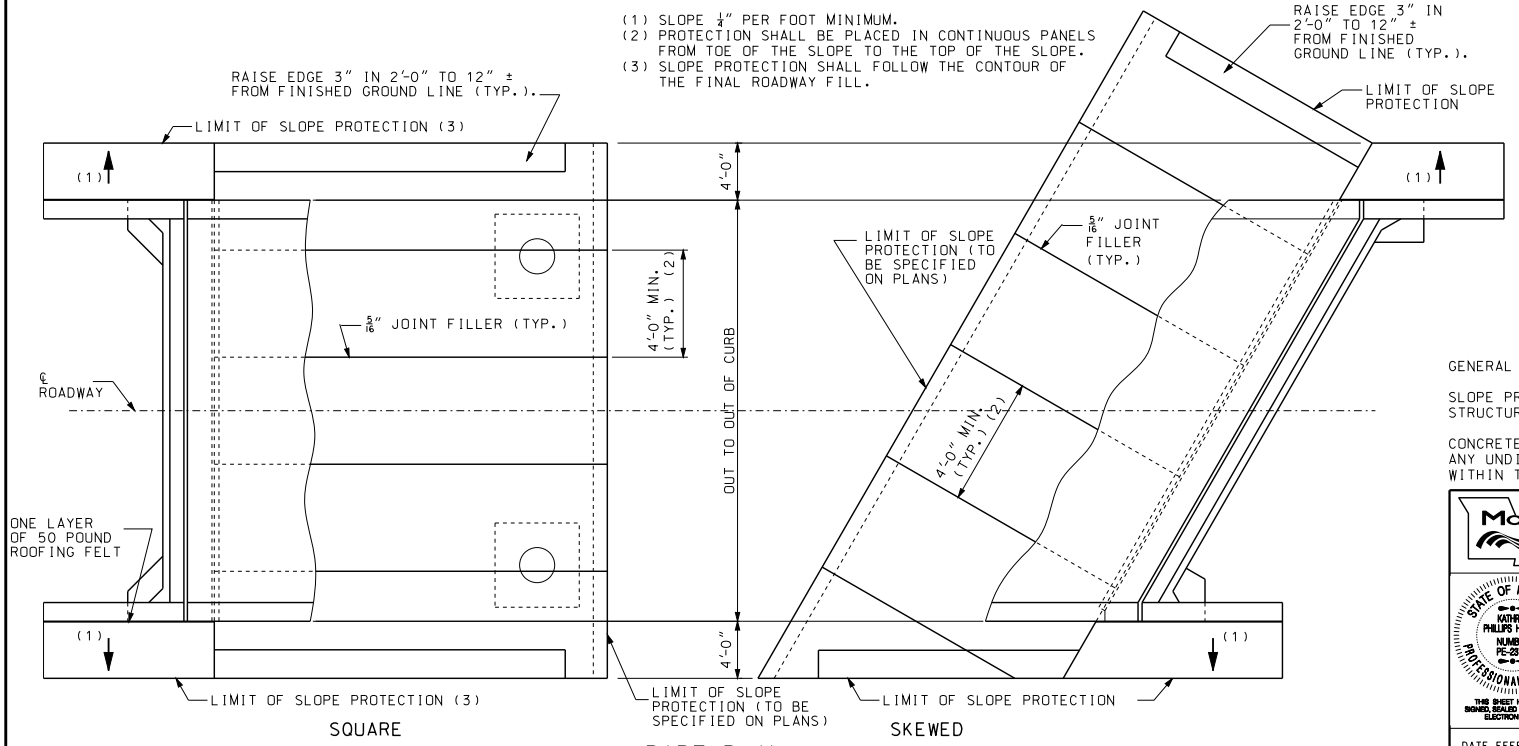


PART PLAN

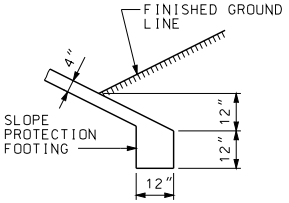


DETAIL A

NOTE:
IF SLOPE PROTECTION FOOTING FALLS ON OR AROUND OTHER FOOTINGS, ONE LAYER OF 50# ROOFING FELT SHALLBE PLACED BETWEEN CONTACT SURFACES OF FOOTINGS.

GENERAL NOTES:

SLOPE PROTECTION SHALL BE MADE CONTINUOUS BETWEEN STRUCTURES WHEN MEDIAN IS 60' OR LESS.

CONCRETE SLOPE PROTECTION SHALL BE FORMED AROUND ANY UNDISTURBED ROCK THAT IS PERMITTED TO REMAIN WITHIN THE SLOPE PROTECTION AREA.

MISSOURI HIGHWAYS AND TRANSPORTATION COMMISSION
105 WEST CAPITOL
JEFFERSON CITY, MO 65102
1-888-ASK-MODOT (1-888-275-6636)

STATE OF MISSOURI
KATHRYN PHILLIPS HARVEY
NUMBER PE-23751
PROFESSIONAL ENGINEER
THIS SHEET HAS BEEN SIGNED, SEALED AND DATED ELECTRONICALLY.

# CONCRETE SLOPE PROTECTION

DATE EFFECTIVE: 01/01/2005
DATE PREPARED: 9/3/2010

611.600

SHEET NO. 1 OF 1

IF A SEAL IS PRESENT ON THIS SHEET IT HAS BEEN ELECTRONICALLY SEALED AND DATED.

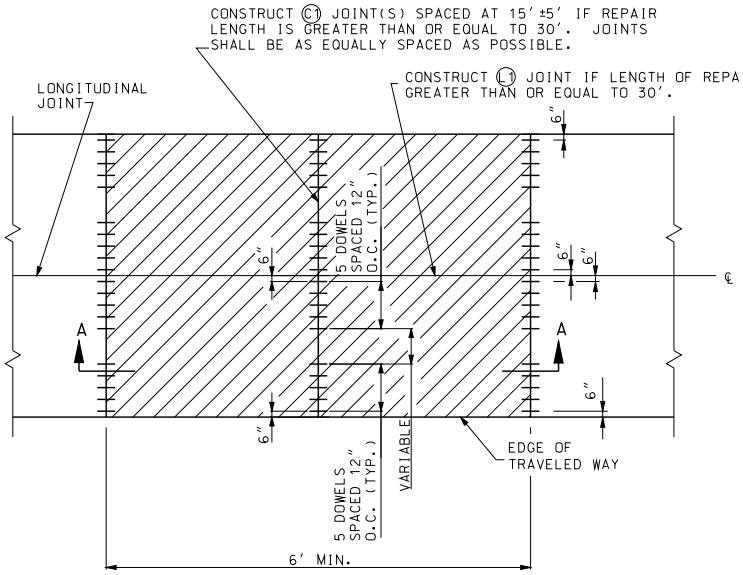


TWO OR MORE LANES

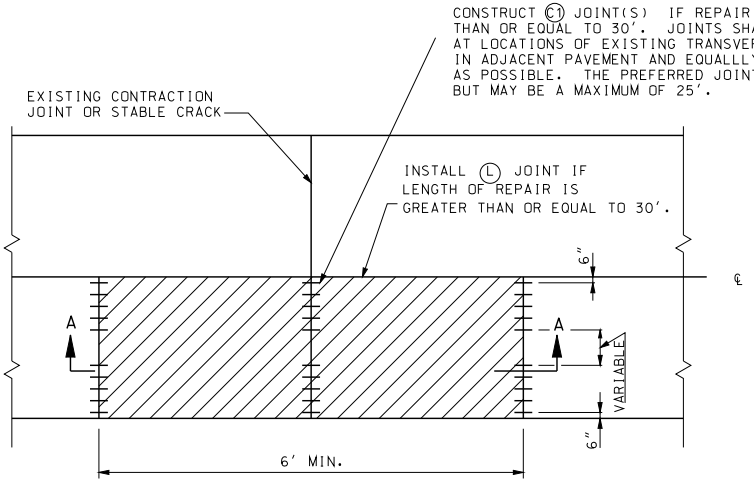


ONE LANE

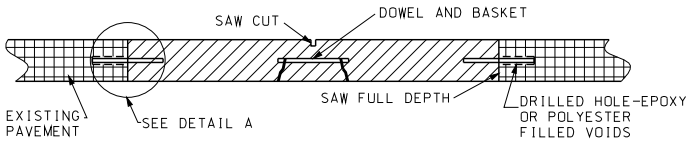


SECTION A-A

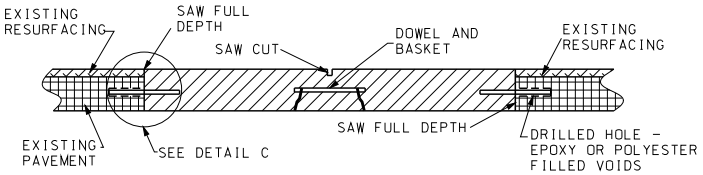


SECTION A-A ALTERNATE
WITH ASPHALT OVERLAY

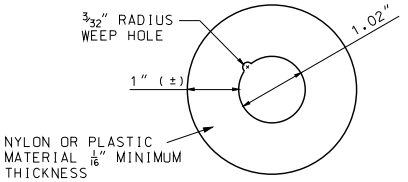


DETAIL B
THIN CIRCULAR DISK

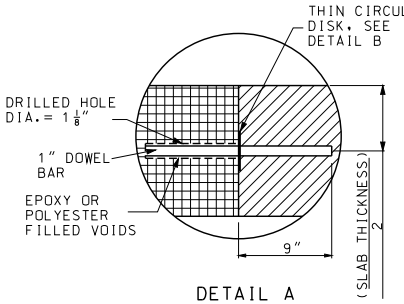


DETAIL A

1. SMOOTH EPOXY COATED DOWELS SHALL BE USED IN ALL FULL DEPTH PAVEMENT REPAIR TRANSVERSE JOINTS.
2. THE ANCHORING MATERIAL (EPOXY OR POLYESTER) SHALL BE PLACED TO THE BACK OF THE PREDRILLED HOLE BEFORE INSERTING THE DOWEL BAR.
3. THE DOWEL IS INSERTED INTO THE HOLE WITH A TWISTING MOTION SO THAT THE MATERIAL IN THE BACK OF THE HOLE IS FORCED UP AND AROUND THE BAR.
4. EXPOSED END OF DOWEL SHALL BE COATED WITH A THIN UNIFORM COAT OF GRAPHITE GREASE. DOWEL BASKET ASSEMBLIES SHALL BE CONSTRUCTED IN ACCORDANCE WITH STANDARD PLAN 502.10. IN LIEU OF GRAPHITE GREASE, THE DOWEL BAR BASKET SUPPLIER MAY PROVIDE COMPLETED BASKET UNITS PRE-DIPPED IN AN APPROVED BONDBREAKER.
5. REPAIR ONLY ONE LANE AT A TIME.

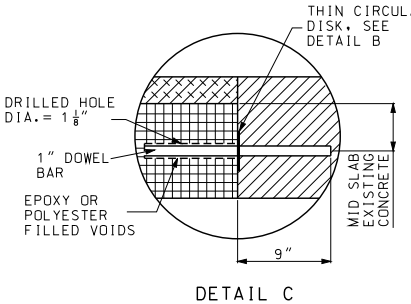


DETAIL C

GENERAL NOTES:

ALL SAW CUTS SHALL BE MADE WITH A DIAMOND SAW EXCEPT THE CENTER RELIEF CUT.

FOR DETAILS OF TYPE C, L AND L1 JOINTS. SEE STANDARD PLAN 502.05.

## NON-REINFORCED AND REINFORCED PORTLAND CEMENT CONCRETE

MISSOURI HIGHWAYS AND TRANSPORTATION COMMISSION
105 WEST CAPITOL
JEFFERSON CITY, MO 65102
1-888-ASK-MODOT (1-888-275-6636)

STATE OF MISSOURI
KATHRYN PHILLIPS HARVEY
NUMBER PE-23751
PROFESSIONAL ENGINEER
THIS SHEET HAS BEEN SIGNED, SEALED AND DATED ELECTRONICALLY.

# PAVEMENT REPAIR
FULL DEPTH

| DATE EFFECTIVE: 06/01/2010 | 613.00P | SHEET NO. |
|---|---|---|
| DATE PREPARED: 4/1/2010 | | 1 OF 3 |

IF A SEAL IS PRESENT ON THIS SHEET IT HAS BEEN ELECTRONICALLY SEALED AND DATED.

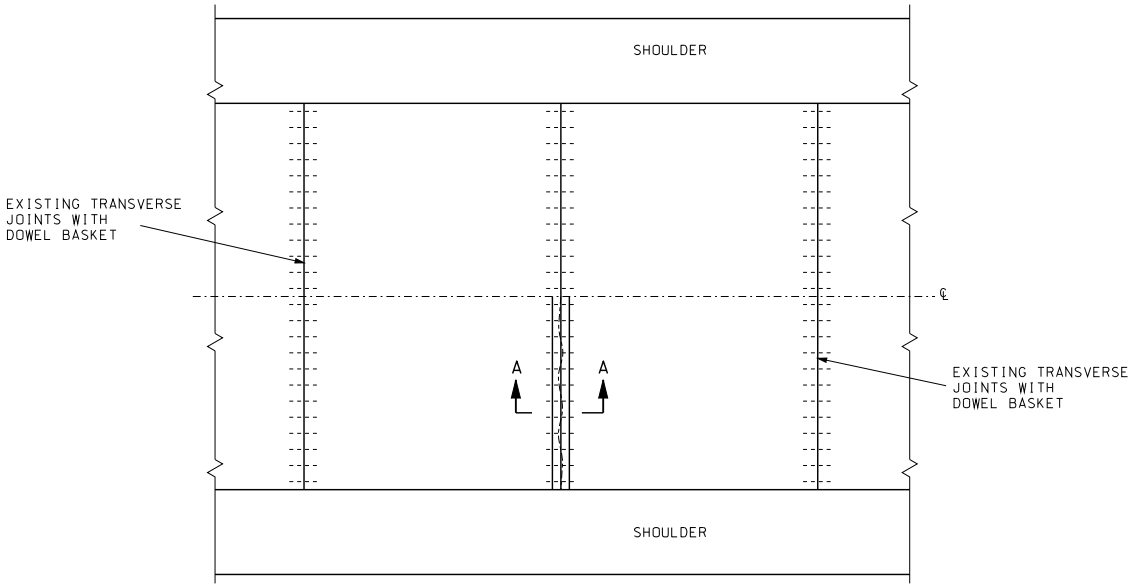


PLAN VIEW

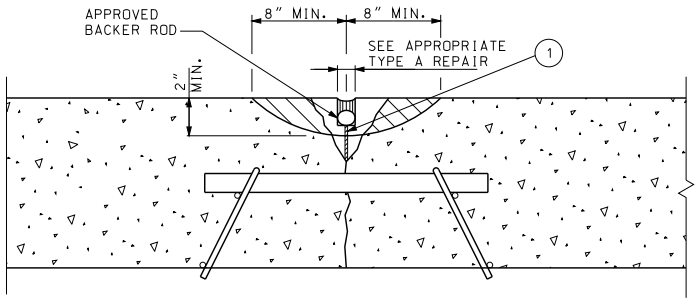


SECTION A-A
MILLING OPTIONS

AREA TO BE REMOVED

(1) THE INITIAL RE-ESTABLISHMENT OF THE JOINT OR CRACK IN THE PLASTIC CONCRETE SHALL BE ACCOMPLISHED WITH AN APPROVED CUTTER BAR OR WITH MINIMUM 1/4" COMPRESSION RELIEF MATERIAL (SAWING NOT ALLOWED).

JOINT COMPRESSION RELIEF TO THE TOP OF THE DOWEL BARS SHALL BE PROVIDED BY A MINIMUM 1/4" SAWCUT AS SOON AS POSSIBLE AFTER INITIAL SET OR MINIMUM 1/4" COMPRESSION RELIEF MATERIAL AS NOTED ABOVE.

GENERAL NOTES:

THE LIMITS OF THE REMOVAL AREA WILL BE DEFINED BY THE ENGINEER.

ALL CONCRETE SHALL BE REMOVED TO LIMITS SHOWN IN THE DETAIL, INCLUDING DETERIORATED CONCRETE TO A MAXIMUM OF 1/2 THE PAVEMENT DEPTH OR TOP OF DOWELS BY MILLING.

EXPOSED SURFACE SHALL BE CLEANED BY SANDBLASTING, HIGH-PRESSURE WATER BLASTING OR OTHER METHODS APPROVED BY THE ENGINEER.

EXPOSED SURFACES OF DOWELS, IF ANY, SHALL BE COATED WITH AN APPROVED BOND BREAKER.

JOINTS AND CRACKS SHALL BE SEALED WITH APPROPRIATE SEALER.

MISSOURI HIGHWAYS AND TRANSPORTATION COMMISSION
105 WEST CAPITOL
JEFFERSON CITY, MO 65102
1-888-ASK-MODOT (1-888-275-6636)

STATE OF MISSOURI
KATHRYN PHILLIPS HARVEY
NUMBER PE-23751
PROFESSIONAL ENGINEER
THIS SHEET HAS BEEN SIGNED, SEALED AND DATED ELECTRONICALLY.

# PAVEMENT REPAIR
## PARTIAL DEPTH AT JOINTS AND CRACKS CLASS A

DATE EFFECTIVE: 06/01/2010
DATE PREPARED: 4/1/2010

613.00P

SHEET NO. 2 OF 3

IF A SEAL IS PRESENT ON THIS SHEET IT HAS BEEN ELECTRONICALLY SEALED AND DATED.

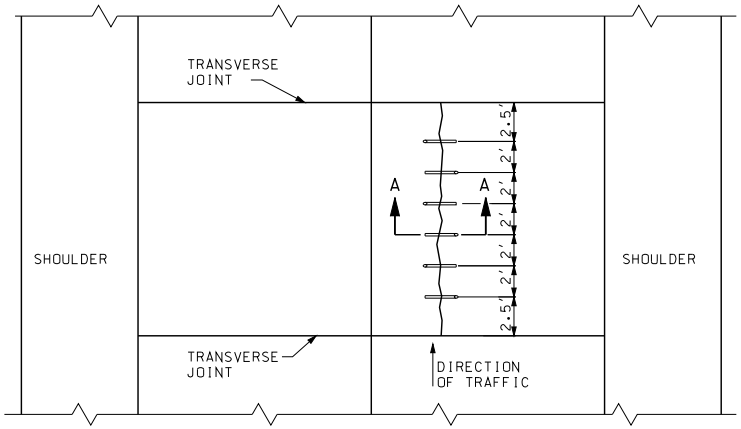


## CROSS STITCHING PLAN

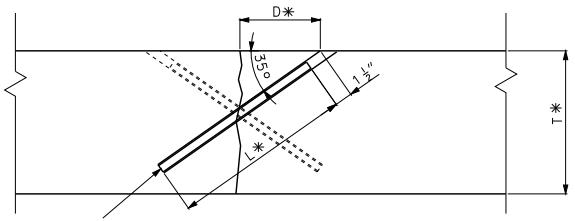


* SEE TABLE

| | | | | | | |
|---|---|---|---|---|---|---|
| T | SLAB THICKNESS (IN) | 8 | 9 | 10 | 11 | 12 |
| D | DISTANCE TO HOLE (IN) | 5 3/4 | 6 1/2 | 7 1/4 | 8 1/2 | 8 1/2 |
| L | LENGTH OF BAR (IN) | 8 1/2 | 11 | 12 1/2 | 14 | 16 |

SECTION A-A

GENERAL NOTES:

AT EACH REPAIR LOCATION, HOLES SHALL BE DRILLED AT 35° ANGLES TO THE PAVEMENT SURFACE, PERPENDICULAR TO THE CRACK. THE DRILL BIT DIAMETER SHALL NOT EXCEED 1 1/8".

DRILLING SHALL ALTERNATE BACK AND FORTH ON EITHER SIDE OF THE LONGITUDINAL JOINT FROM HOLE TO HOLE.

DRILLED HOLES SHALL NOT PENETRATE THROUGH THE SLAB BOTTOM.

DRILLED HOLES SHALL BE CLEANED OF LOOSE DEBRIS AND DUST. EPOXY OR POLYESTER BONDING AGENTS FOR DOWELS, MEETING THE MATERIAL REQUIREMENTS OF SECTION 1039, SHALL BE INJECTED OR POURED INTO EACH HOLE. A CROSS-STITCH BAR SHALL BE INSERTED IN EACH HOLE SUCH THAT THE EPOXY MATERIAL IS EVENLY DISTRIBUTED AROUND THE BAR AND EXTRUDING FROM THE SURFACE OPENING. EACH BAR SHALL BE INSERTED FAR ENOUGH TO ALLOW 1½" OF COVER AS SHOWN IN THE PROFILE DETAIL.

THE SURFACE SHALL HAVE ALL EXCESS EPOXY REMOVED AND HAVE A FLUSH FINISH.
GENERAL NOTES:

MISSOURI HIGHWAYS AND TRANSPORTATION COMMISSION
105 WEST CAPITOL
JEFFERSON CITY, MO 65102
1-888-ASK-MODOT (1-888-275-6636)

STATE OF MISSOURI
KATHRYN PHILLIPS HARVEY
NUMBER PE-23751
PROFESSIONAL ENGINEER
THIS SHEET HAS BEEN SIGNED, SEALED AND DATED ELECTRONICALLY.

# PAVEMENT REPAIR
CROSS STITCHING

DATE EFFECTIVE: 06/01/2010
DATE PREPARED: 4/1/2010

613.00P

SHEET NO. 3 OF 3

IF A SEAL IS PRESENT ON THIS SHEET IT HAS BEEN ELECTRONICALLY SEALED AND DATED.

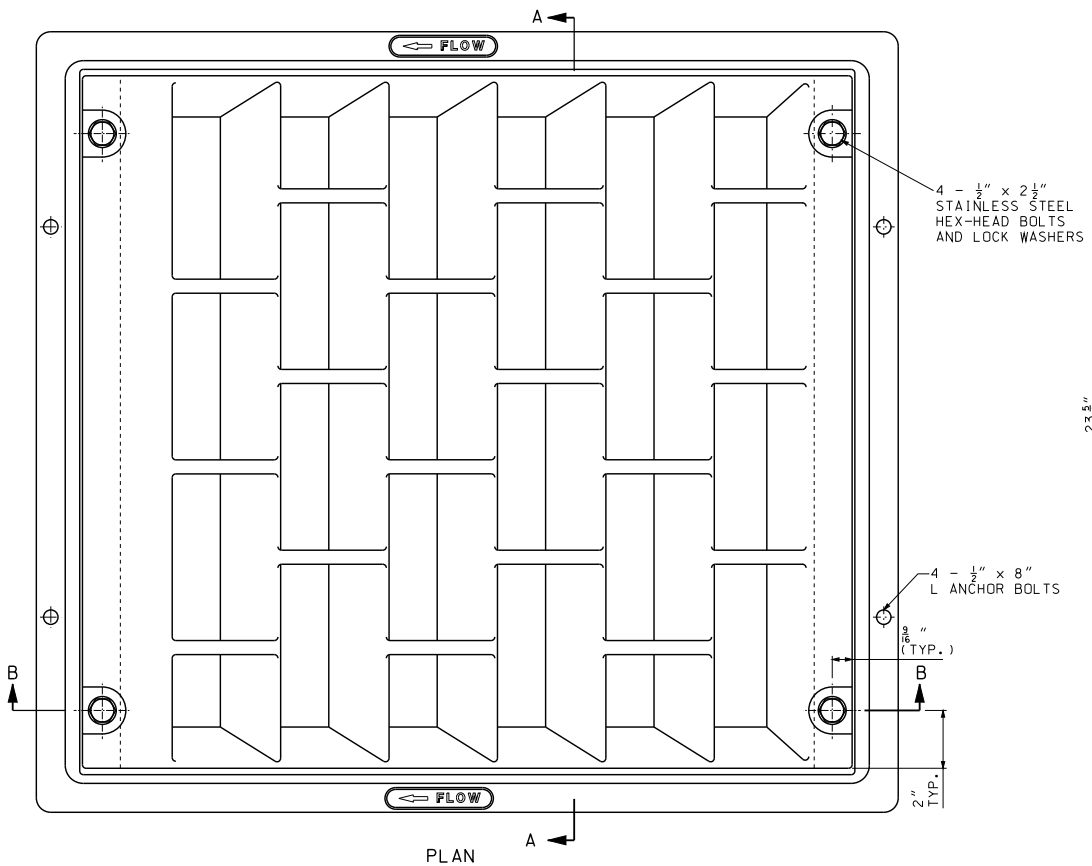


PLAN

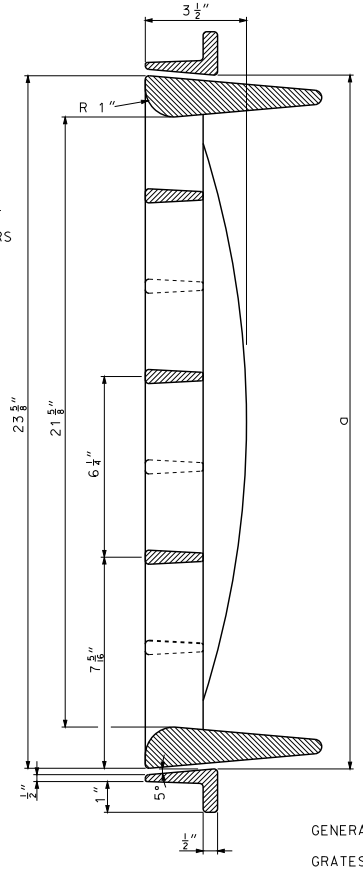


SECTION A-A

| NOMINAL DIMENSIONS AND WEIGHTS | | | | | |
|---|---|---|---|---|---|
| OPENING | | a | WEIGHT (LB.) | NUMBER OF | |
| WIDTH | LENGTH | | | ANCHOR BOLTS | STAINLESS STEEL BOLTS |
| 2'-0" | 2'-0" | 24" | 200 | 4 | 4 |
| 4'-0" | 2'-0" | 48" | 348 | 8 | 8 |

NOTE: TWO 2' X 2' GRATES MAY BE USED IN LIEU OF SINGLE 4' X 2' GRATES.

INSTALLATION INSTRUCTIONS:

DRILL AND TAP FRAME.

INSTALL ½" DIA. BOLTS WITHOUT WASHERS BEFORE CONCRETE POUR TO FORM ½"± BOLT EXTENSION INTO CONCRETE BELOW FRAME. LUBRICATE EXPOSED THREADS.

AFTER CONCRETE HARDENS SUFFICIENTLY, FINAL INSTALLATION SHALL REMOVE AND REINSTALL ½" DIA. BOLTS AND LOCK WASHERS THROUGH GRATE AND FRAME. TORQUE ½" DIA. BOLTS TO 35-40 FT. LB. APPLY THREAD ADHESIVE TO ALL ½" DIA. STAINLESS STEEL BOLTS.

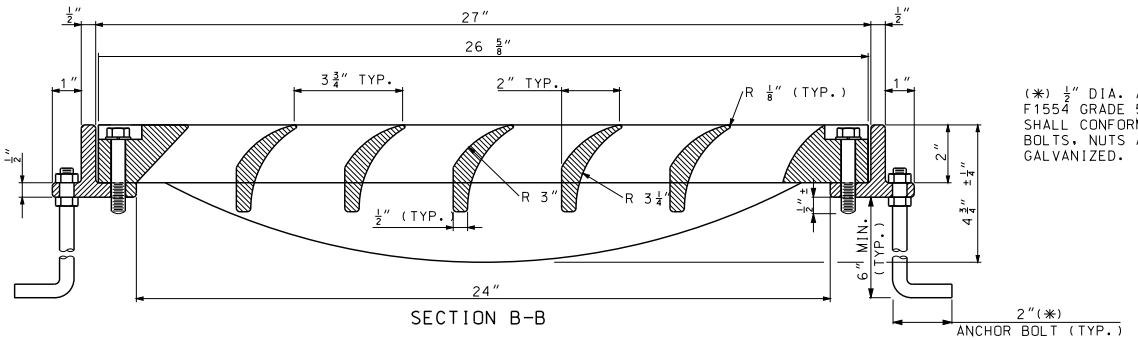


SECTION B-B

(*) ½" DIA. ANCHOR BOLT SHALL BE ASTM F1554 GRADE 55. NUTS FOR ANCHOR BOLT SHALL CONFORM TO ASTM A563. ANCHOR BOLTS, NUTS AND WASHERS SHALL BE GALVANIZED.

GENERAL NOTES:

GRATES TO BE CONSTRUCTED OF CAST GRAY IRON AND MEET REQUIREMENTS OF AASHTO M 306. MINOR VARIATIONS IN VANE SHAPE TO MEET MANUFACTURER'S STANDARD PRACTICE ARE PERMITTED.

MINIMUM CLEAR OPEN AREA: 2.10 SQUARE FEET.

MISSOURI HIGHWAYS AND TRANSPORTATION COMMISSION
105 WEST CAPITOL
JEFFERSON CITY, MO 65102
1-888-ASK-MODOT (1-888-275-6636)

STATE OF MISSOURI
KATHRYN PHILLIPS HARVEY
NUMBER PE-23751
PROFESSIONAL ENGINEER
THIS SHEET HAS BEEN SIGNED, SEALED AND DATED ELECTRONICALLY.

# CURVED VANE GRATE AND FRAME

DATE EFFECTIVE: 06/01/2010
DATE PREPARED: 8/8/2011

614.11C

SHEET NO. 1 OF 1

IF A SEAL IS PRESENT ON THIS SHEET IT HAS BEEN ELECTRONICALLY SEALED AND DATED.

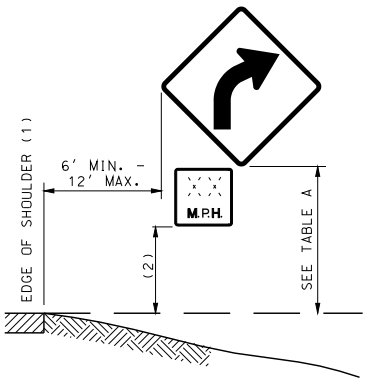


(1) EDGE OF TRAVELED WAY WHERE THERE IS NO PAVED OR STABILIZED SHOULDER.
(2) ONE-FOOT LESS THAN MOUNTING HEIGHT NOTED IN TABLE A.

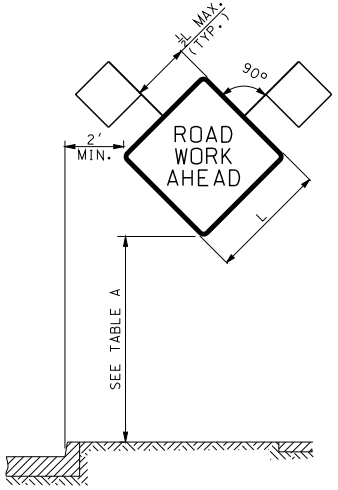


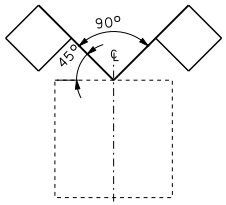


## HEIGHT AND LATERAL LOCATIONS FOR POST AND PORTABLE SIGN MOUNTING

| TYPE | SIGN SUPPORT | SIGN SUBSTRATE | MINIMUM MOUNTING HEIGHT(3) | USAGE LIMITATIONS | COMMENTS |
|---|---|---|---|---|---|
| POST | PERFORATED SQUARE STEEL TUBE<br>U-CHANNEL<br>WOOD | RIGID | 5' RURAL UNDIVIDED HIGHWAYS<br>7' RURAL DIVIDED HIGHWAYS<br>7' URBAN HIGHWAYS | NONE | POSTS SHALL BE FREE OF ANY BRACING AND EXTEND NO FURTHER ABOVE THE SIGN EXCEPT AS NEEDED FOR WARNING LIGHT ATTACHMENT. SEE STANDARD PLAN 903.03 FOR POST INSTALLATION DETAILS. GALVANIZATION OF POSTS WILL NOT BE REQUIRED. |
| TYPE 1 PORTABLE | SKID<br>FOLD-UP STAND | RIGID | 5' RURAL UNDIVIDED HIGHWAYS<br>7' RURAL DIVIDED HIGHWAYS<br>7' URBAN HIGHWAYS | PERMITTED ONLY WHERE POST MOUNTING IS NOT FEASIBLE. | SYSTEMS SHALL COMPLY WITH CRASH TEST REQUIREMENTS OF NCHRP 350 TEST LEVEL 3 AND MAY BE PLACED ADJACENT TO OR WITHIN THE ROADWAY PROVIDED A MINIMUM LATERAL CLEARANCE OF 3 FEET, MEASURED HORIZONTALLY FROM THE EDGE OF THE SIGN TO THE EDGE OF DESIGNATED TRAVELED WAY, IS MAINTAINED. |
| TYPE 2 PORTABLE | EASEL<br>FOLD-UP STAND<br>SELF-DRIVING POST<br>TYPE III MOVABLE BARRICADE<br>SKID | FLEXIBLE<br>RIGID | 12"(4) | PERMITTED ONLY FOR INSTALLATION UP TO 3 DAYS(5). WHERE SIGNS ARE OBSCURED BY OTHER OBJECTS (I.E., TRAFFIC CONTROL DEVICES, PARKED VEHICLES, BARRIER, VEGETATION, ETC.) OR INSTALLED ON MULTI-LANE UNDIVIDED FACILITIES OR MULTI-LANE DIVIDED FACILITIES WITH 3 OR MORE LANES IN ONE DIRECTION, MOUNTING HEIGHTS SHALL BE AS SPECIFIED FOR POST-MOUNTED SIGNS. | SYSTEMS SHALL COMPLY WITH CRASH TEST REQUIREMENTS OF NCHRP 350 TEST LEVEL 3 AND MAY BE PLACE ADJACENT TO OR WITHIN ROADWAY PROVIDED A MINIMUM LATERAL CLEARANCE OF 3 FEET, MEASURED HORIZONTALLY FROM THE EDGE OF THE SIGN TO THE EDGE OF THE DESIGNATED TRAVELED WAY, IS MAINTAINED. |
| BARRIER | CONCRETE TRAFFIC BARRIER<br>GUARDRAIL | FLEXIBLE<br>RIGID | 5' RURAL UNDIVIDED HIGHWAYS<br>7' RURAL DIVIDED HIGHWAYS<br>7' URBAN HIGHWAYS | PERMITTED ONLY WHERE LONGITUDINAL BARRIER IS PRESENT. | SYSTEMS SHALL PROVIDE POSITIVE CONNECTION TO THE BARRIER AND MINIMIZE POTENTIAL FOR VEHICLE SNAGGING. |
| VEHICLE | PAVEMENT MARKING EQUIPMENT<br>PILOT CAR<br>PROTECTIVE VEHICLE | FLEXIBLE<br>RIGID | 48" (6) | PERMITTED ONLY IN PILOT CAR OR MOVING OPERATIONS. | |

(3) MEASURED FROM THE BOTTOM OF THE SIGN TO THE NEAR EDGE OF THE PAVEMENT.
(4) MOUNTING HEIGHTS FOR REGULATORY AND GUIDE SIGNS SHALL BE AS SPECIFIED FOR POST-MOUNTED SIGNS.
(5) SIGNS MOUNTED ON TYPE III BARRICADES, GORE EXIT SIGN, AND SIGNS FOR CROSWALK/SIDEWALK CLOSURES MAY BE LEFT IN PLACE FOR MORE THAN 3 DAYS.
(6) DEVIATIONS AS APPROVED BY THE ENGINEER.

## TABLE A
## WORK ZONE SIGN MOUNTING REQUIREMENTS

| SIGN AREA (SQ.FT.) | POST TYPE | | |
|---|---|---|---|
| | U-CHANNEL | WOOD | PERF. SQUARE STEEL TUBING |
| ≤ 10 | 1 - 3.0 LB./FT.* | 1 - 4" X 4"* | 1 - 2" 12 GA.* |
| > 10 ≤ 16 | 2 - 3.0 LB./FT. | 2 - 4" X 4"<br>1 - 4" X 6"* | 2 - 2" 12 GA. |
| > 16 ≤ 24 | 2 - 3.0 LB./FT. | 2 - 4" X 6" | 3 - 2" 12 GA.** |
| > 24 ≤ 30 | 3 - 3.0 LB./FT. | 2 - 4" X 6" | N/A |
| > 30 ≤ 50 | N/A | 2 - 6" X 6" | N/A |

* SIGNS GREATER THAN 4 FEET IN WIDTH, EXCEPT DIAMOND SHAPE SIGNS, REQUIRE TWO POSTS.

** REQUIRES SLIP BASE PER MANUFACTURER'S RECOMMENDATION.

## TABLE B
## POST SIZE REQUIREMENTS

GENERAL NOTES:

LONGITUDINAL SPACING OF SIGNS SHOWN IN THE PLANS ARE PREFERRED MINIMUMS, BUT MAY BE ADJUSTED TO MEET EXISTING FIELD CONDITIONS WITH APPROVAL FROM THE ENGINEER.

SIGNS SHALL NOT BE MOUNTED IN OR ON CHANNELIZERS.

ALL POSTS AND SIGNS SHALL BE INSTALLED AND MAINTAINED IN A PLUMB POSITION.

CONSTRUCTION SIGNS SHALL NOT BE LOCATED ON SIDEWALKS, BICYCLE LANES, OR AREAS DESIGNATED FOR PEDESTRIAN OR BICYCLE TRAFFIC.

ALL BATTERY PACKS SEPARATE FROM WARNING LIGHT SHALL BE MOUNTED ON A SUPPORT POST NO HIGHER THAN 18" ABOVE GROUND LINE. IF USED, WARNING LIGHTS SHALL NOT COVER ANY PORTION OF THE SIGN FACE.

MISSOURI HIGHWAYS AND TRANSPORTATION COMMISSION
105 WEST CAPITOL
JEFFERSON CITY, MO 65102
1-888-ASK-MODOT (1-888-275-6636)

STATE OF MISSOURI
KATHRYN PHILLIPS HARVEY
NUMBER PE-2375T
PROFESSIONAL ENGINEER
THIS SHEET HAS BEEN SIGNED, SEALED AND DATED ELECTRONICALLY.

# TEMPORARY TRAFFIC CONTROL DEVICES
SIGN MOUNTING REQUIREMENTS

DATE EFFECTIVE: 05/01/2012
DATE PREPARED: 3/28/2012

616.10AP

SHEET NO. 1 OF 8

IF A SEAL IS PRESENT ON THIS SHEET IT HAS BEEN ELECTRONICALLY SEALED AND DATED.

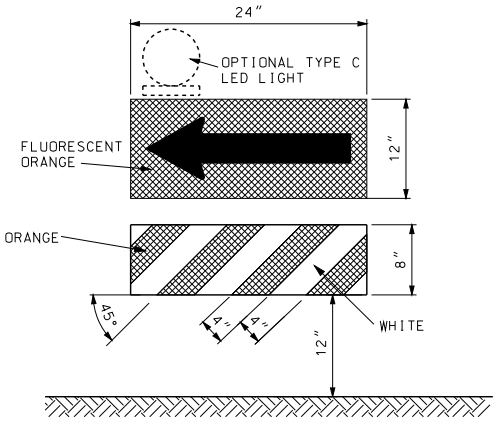


## DIRECTION INDICATOR BARRICADE

VERTICAL DIMENSIONS DO NOT INCLUDE PROJECTIONS DESIGNED FOR EASE OF HANDLING.

DIRECTION INDICATOR BARRICADES SHALL NOT BE USED IN SHIFTING TAPERS UNLESS SHOWN ON THE PLANS.

THE PANELS SHALL BE SECURELY ATTACHED TO A SUPPORT THAT IS PORTABLE, CAPABLE OF REMAINING UPRIGHT AND ENTIRELY FREE STANDING.

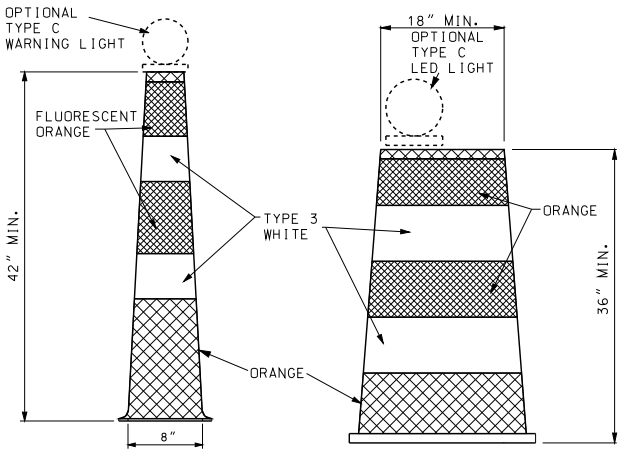


## CHANNELIZERS

REFLECTIVE SHEETING APPLIED TO CHANNELIZERS SHALL BE REBOUNDABLE MEETING ASTM D 4956.

STRIPES ON TRIM-LINE CHANNELIZERS SHALL BE 6" TO 8".
STRIPES ON DRUM-LIKE CHANNELIZERS SHALL BE 4" TO 6".

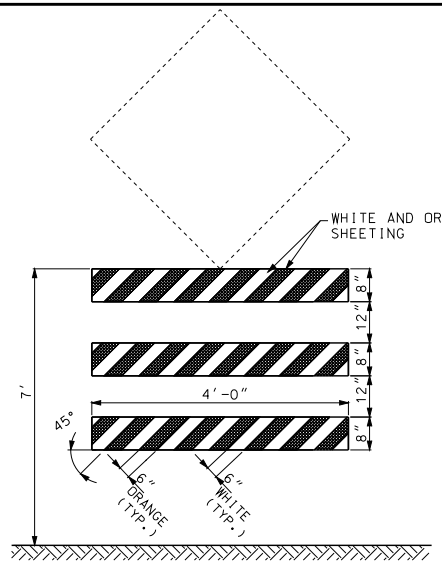


## ADVANCE WARNING RAIL SYSTEM

MAXIMUM WEIGHT OF SIGN SHALL NOT EXCEED 25 LBS.

THE SIGN AND RAIL SYSTEM MAY BE MOUNTED AS TWO SEPARATE CRASHWORTHY DEVICES. THE RAIL SYSTEM SHALL BE LOCATED DIRECTLY IN FRONT OF THE SIGN WITH 7 TO 10 FEET SEPARATING THE TWO DEVICES.

WHERE MARKING IS NOT PROVIDED ON THE BACKSIDE, STRIPS OF 3" WIDE MODOT TYPE 7 ORANGE SHEETING MAY BE APPLIED TO THE ENDS OF EACH RAIL TO HELP DELINEATE THE DEVICE.

WHITE AND ORANGE REFLECTIVE SHEETING SHALL BE IN ACCORDANCE WITH SEC 1042.2.7.3.

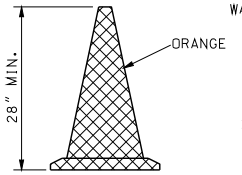


CONE

CONES SHALL MAINTAIN THEIR SHAPE UPON EXPOSURE TO NORMAL WORK CONDITIONS.

CONES SHALL BE USED DURING DAYLIGHT HOURS ONLY.

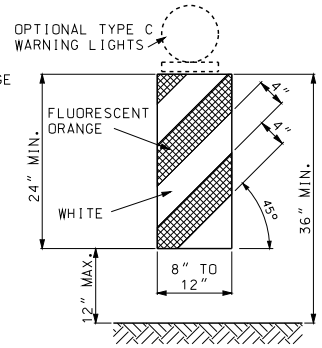


VERTICAL PANEL

VERTICAL PANELS SHALL BE SECURELY ATTACHED TO A SUPPORT THAT IS PORTABLE, CAPABLE OF REMAINING UPRIGHT AND ENTIRELY FREE STANDING.

GENERAL NOTES:

FLUORESCENT ORANGE REFLECTIVE SHEETING SHALL IN ACCORDANCE WITH SEC 1042.2.7.3.

BALLAST FOR TRAFFIC CONTROL DEVICES SHALL CONFORM TO MANUFACTURERS' RECOMMENDATION FOR FIELD CONDITIONS WHEN APPLICABLE.

WHITE AND ORANGE REFLECTIVE SHEETING SHALL BE IN ACCORDANCE WITH SEC 1042.2.7.2.

IF REQUIRED BY THE ENGINEER OR SPECIFIED ON THE PLANS, EACH DIRECTION INDICATOR BARRICADE, DRUMLIKE CHANNELIZER, AND VERTICAL PANEL SHALL BE EQUIPPED WITH ONE TYPE C LED PORTABLE LIGHT UNIT. IF USED, THE LIGHT UNIT AND BATTERY COMPARTMENT SHALL BE FURNISHED BY THE DEVICE MANUFACTURER OR OTHERWISE MEET THE MANUFACTURER'S RECOMMENDATIONS FOR DESIGN AND WILL BE REQUIRED ON ALL DEVICES IN THE SERIES.

UPON APPROVAL OF THE ENGINEER, THE CONTRACTOR MAY, AT NO ADDITIONAL COST, USE DRUM-LIKE CHANNELIZERS IN LIEU OF TRIM-LINE CHANNELIZERS TO PROVIDE LONGITUDINAL CHANNELIZATION WITHIN THE ACTIVITY AREA WHERE NO RAMPS, INTERSECTIONS OR LIMITED LATERAL CLEARANCE EXISTS.

UPON APPROVAL OF THE ENGINEER, THE CONTRACTOR MAY, AT NO ADDITIONAL COST, USE DIRECTION INDICATOR BARRICADES IN LIEU OF TRIM-LINE CHANNELIZERS IN MERGING TAPERS.

UPON APPROVAL OF THE ENGINEER, THE CONTRACTOR MAY, AT NO ADDITIONAL COST, USE VERTICAL PANELS IN LIEU OF TRIM-LINE CHANNELIZERS TO PROVIDE LONGITUDINAL CHANNELIZATION WITHIN THE ACTIVITY AREA.

UPON APPROVAL OF THE ENGINEER, THE CONTRACTOR MAY, AT NO ADDITIONAL COST, USE CONES IN LIEU OF TRIM-LINE CHANNELIZERS DURING DAYTIME OPERATIONS ON MINOR ROUTES.

PANEL AND RAIL MARKINGS FOR TRAFFIC DELINEATION SHALL SLOPE DOWNWARD TOWARD THE INTENDED DIRECTION OF TRAVEL. ILLUSTRATIONS SHOWN ARE FOR INSTANCES WHERE TRAFFIC MOVES TO THE LEFT, REVERSE CONFIGURATIONS SHALL BE USED FOR TRAFFIC MOVEMENTS TO THE RIGHT. MARKINGS SHALL ONLY BE APPLIED TO THE FRONT OF EACH RAIL OR PANEL, OR MAY BE APPLIED TO BOTH THE FRONT AND BACK PROVIDING THE MARKING ON THE BACK DOES NOT CONFLICT WITH INTENDED OPPOSING TRAFFIC MOVEMENT.

MISSOURI HIGHWAYS AND TRANSPORTATION COMMISSION
105 WEST CAPITOL
JEFFERSON CITY, MO 65102
1-888-ASK-MODOT (1-888-275-6636)

STATE OF MISSOURI
KATHRYN PHILLIPS HARVEY
NUMBER PE-23751
PROFESSIONAL ENGINEER
THIS SHEET HAS BEEN SIGNED, SEALED AND DATED ELECTRONICALLY.

# TEMPORARY TRAFFIC CONTROL DEVICES

CHANNELIZERS AND DIRECTION INDICATOR BARRICADE

DATE EFFECTIVE: 05/01/2012
DATE PREPARED: 3/28/2012

616.10AP

SHEET NO. 2 OF 8

IF A SEAL IS PRESENT ON THIS SHEET IT HAS BEEN ELECTRONICALLY SEALED AND DATED.

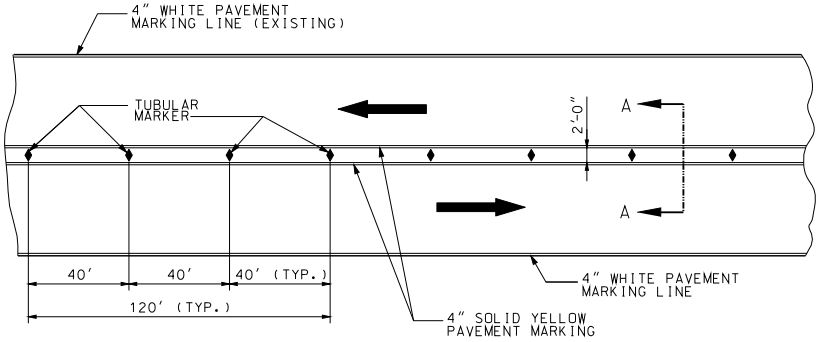


## TWO LANE / TWO WAY TRAFFIC DELINEATION PLAN FOR DIVIDED HIGHWAY

IF RAISED PAVEMENT MARKERS ARE PRESENT, THE LENSES SHALL BE REMOVED OR COVERED TO THE SATISFACTION OF THE ENGINEER.

ONE TYPE III MOVABLE BARRICADE WILL BE REQUIRED TO COMPLETELY CLOSE EACH 8' OF PAVEMENT. PAVED SHOULDERS SHALL BE INCLUDED IN THE AREA TO BE CLOSED.

SIGNS SHALL BE LIGHT WEIGHT (ROLL-UP OR PLASTIC) AND OBSCURE NO MORE THAN 50 PERCENT OF THE TOP 2 RAILS OR 33 PERCENT OF ALL THREE RAILS.

TYPE C WARNING LIGHTS SHALL BE LIGHT WEIGHT (3.3 LBS. OR LESS) OR HAVE BATTERY PACK MOUNTED NO HIGHER THAN 18-INCH AND SHALL NOT COVER ANY PORTION OF THE BARRICADED FACE.

IF SIGNS OR LIGHTS CANNOT MEET THE ABOVE REQUIREMENTS, THEY SHALL BE MOUNTED ON SEPARATE CRASHWORTHY DEVICES AT HEIGHTS SPECIFIED FOR POST MOUNTED SIGNS, LOCATED IN TABLE A ON SHEET 1.

WHERE A BARRICADE ARRAY EXTENDS ACROSS A ROADWAY, THE STRIPES SHALL SLOPE DOWNWARD IN THE DIRECTION TOWARD WHICH TRAFFIC MUST TURN OR PASS.

WHERE BOTH RIGHT AND LEFT VEHICULAR MOVEMENTS ARE PROVIDED, THE STRIPES SHALL SLOPE DOWNWARD IN BOTH DIRECTIONS FROM THE CENTER OF THE BARRICADE ARRAY.

WHERE NO VEHICULAR MOVEMENTS ARE PROVIDED, THE STRIPES SHALL SLOPE DOWNWARD TOWARD THE CENTER OF THE BARRICADE ARRAY.

TYPE III MOVABLE BARRICADES SHALL BE ENTIRELY FREE STANDING AND PORTABLE. MARKING SHALL ONLY BE APPLIED TO THE FRONT OF EACH RAIL OR MAY BE APPLIED TO BOTH THE FRONT AND THE BACK OF EACH RAIL PROVIDED THE MARKING ON THE BACK DOES NOT CONFLICT WITH INTENDED OPPOSING TRAFFIC MOVEMENT. WHERE MARKING IS NOT PROVIDED ON THE BACKSIDE, STRIPS OF 3" WIDE ORANGE SHEETING MAY BE APPLIED TO THE ENDS OF EACH RAIL TO HELP DELINEATE THE DEVICE.

WHITE AND ORANGE REFLECTIVE SHEETING SHALL BE IN ACCORDANCE WITH SEC 104.2.7.3.

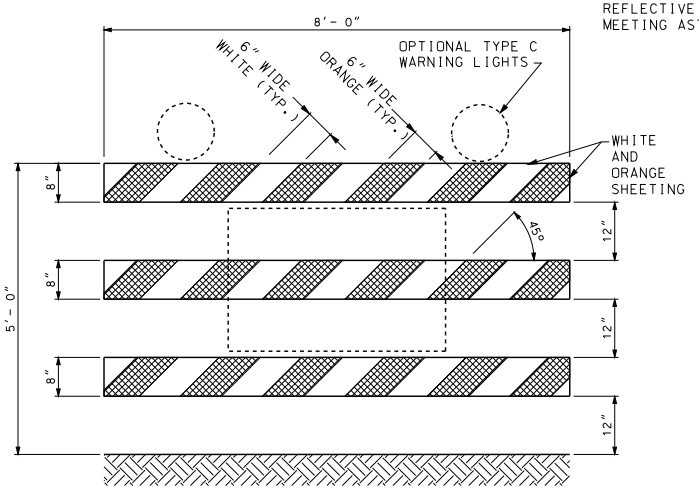


## TYPE III MOVABLE BARRICADE

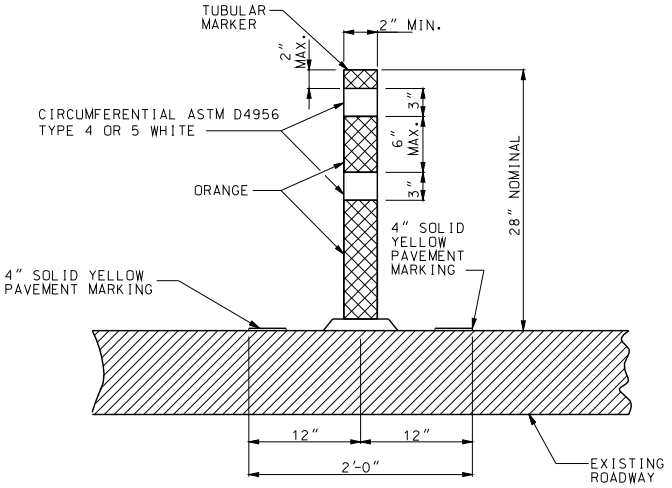


SECTION A-A

## TUBULAR MARKER DETAIL

AN ADHESIVE, IN ACCORDANCE WITH THE MANUFACTURER'S RECOMMENDATIONS, SHALL BE USED TO APPLY THE TUBULAR MARKER TO THE ROADWAY SURFACE. THE ADHESIVE SHALL PERMIT EASY REMOVAL OF THE TUBULAR MARKER WITHOUT DAMAGE TO THE ROADWAY SURFACE.

REFLECTIVE SHEETING APPLIED TO TUBULAR MARKERS SHALL BE REBOUNDABLE MEETING ASTM D4956.

IF A SEAL IS PRESENT ON THIS SHEET IT HAS BEEN ELECTRONICALLY SEALED AND DATED.

MISSOURI HIGHWAYS AND TRANSPORTATION COMMISSION
105 WEST CAPITOL
JEFFERSON CITY, MO 65102
1-888-ASK-MODOT (1-888-275-6636)

STATE OF MISSOURI
KATHRYN PHILLIPS HARVEY
NUMBER PE-23751
PROFESSIONAL ENGINEER
THIS SHEET HAS BEEN SIGNED, SEALED AND DATED ELECTRONICALLY.

# TEMPORARY TRAFFIC CONTROL DEVICES

| DATE EFFECTIVE: | 05/01/2012 | 616.10AP | SHEET NO. 3 OF 8 |
|---|---|---|---|
| DATE PREPARED: | 3/28/2012 | | |

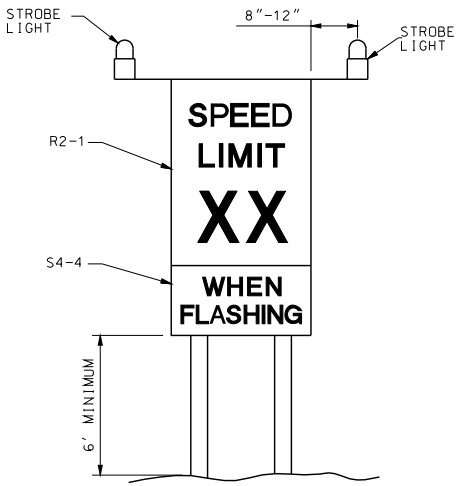


SEE NON-PORTABLE SIGN MOUNTING FOR LATERAL DIMENSIONS

## SPEED LIMIT AND STROBE LIGHT ASSEMBLY

THE ASSEMBLY MAY BE EITHER POST- OR PORTABLE-MOUNTED.

THE ASSEMBLY SHALL ONLY BE USED AS SPECIFIED ON THE PLANS OR AS DIRECTED BY THE ENGINEER.

THE ASSEMBLY SHALL BE COVERED OR ROTATED SO THE SIGNS ARE NOT VISIBLE TO TRAFFIC WHEN WORK IS SUSPENDED OR THE CONDITION REQUIRING THE SPEED REDUCTION IS NOT PRESENT FOR 48 HOURS OR MORE.

THE STROBE LIGHTS SHALL BE TURNED OFF WHEN THE SPEED LIMIT IS NOT IN EFFECT.

## STROBE LIGHT REQUIREMENTS

STROBE LIGHTS SHALL BE SHIELDED SO THEY WILL NOT BE DIRECTLY VISIBLE FROM THE REAR. NO DIRECT PAYMENT WILL BE MADE FOR THE BATTERIES REQUIRED TO POWER THE STROBE LIGHTS.

AT THE CONTRACTOR'S OPTION, THE STROBE LIGHTS MAY BE CONTROLLED BY A SWITCH LOCATED ON THE SIGN OR MAY BE A STANDARD TWO-CHANNEL DIGITAL TRANSMITTER AND RECEIVER UNIT. IF THE TRANSMITTER AND RECEIVER METHOD IS USED, ONE TRANSMITTER SHALL BE FURNISHED TO THE ENGINEER AT THE TIME OF INSTALLATION OF THE SPEED LIMIT ASSEMBLY. THE TRANSMITTER WILL BE RETURNED TO THE CONTRACTOR AT THE COMPLETION OF THE PROJECT. THE TRANSMITTER AND RECEIVERS WILL REMAIN THE PROPERTY OF THE CONTRACTOR AFTER THE PROJECT IS COMPLETED. NO DIRECT PAYMENT WILL BE MADE FOR THE COST OF THE TRANSMITTER AND RECEIVER.

## PORTABLE WARNING LIGHTS

| | TYPE A LOW INTENSITY | TYPE B HIGH INTENSITY | TYPE C STEADY BURN |
|---|---|---|---|
| LENS DIRECTIONAL FACES | 1 OR 2 | 1 | 1 OR 2 |
| FLASHING RATE PER MINUTE | 55 TO 75 | 55 TO 75 | CONSTANT |
| MINIMUM ON-TIME(1) | 10% | 8% | CONSTANT |
| HOURS OF OPERATION | DUSK TO DAWN | 24 HRS/DAY | DUSK TO DAWN |

TYPE A AND C LIGHTS SHALL BE VISIBLE ON A CLEAR NIGHT FROM A DISTANCE OF 3000 FEET(2).

TYPE B LIGHTS SHALL BE VISIBLE ON A SUNNY DAY WHEN VIEWED WITHOUT THE SUN DIRECTLY ON OR BEHIND THE DEVICE FROM A DISTANCE OF 1000 FEET(2).

(1) LENGTH OF TIME THAT INSTANTANEOUS INTENSITY IS EQUAL TO OR GREATER THAN EFFECTIVE INTENSITY.

(2) THIS VISIBILITY MUST BE MAINTAINED WITHIN A SOLID ANGLE 9° ON EACH SIDE OF THE VERTICAL AXIS, AND 5° ABOVE AND 5° BELOW THE HORIZONTAL AXIS.

PORTABLE WARNING LIGHTS SHALL BE BATTERY- OR SOLAR-POWERED.

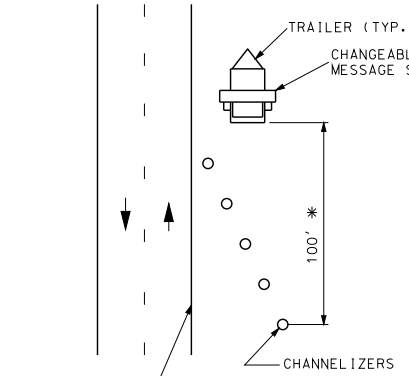


* 5 CHANNELIZERS AT 20' INTERVALS. CHANNELIZERS MAY BE OMITTED WHERE THE CHANGEABLE MESSAGE SIGN IS LOCATED 15' OR MORE FROM THE EDGE OF ANY SHOULDER (EDGE OF ROADWAY WHOULD THERE BE NO SHOULDER), BEYOND THE DITCH LINE, OR BEHIND A CURB OR PHYSICAL BARRIER.

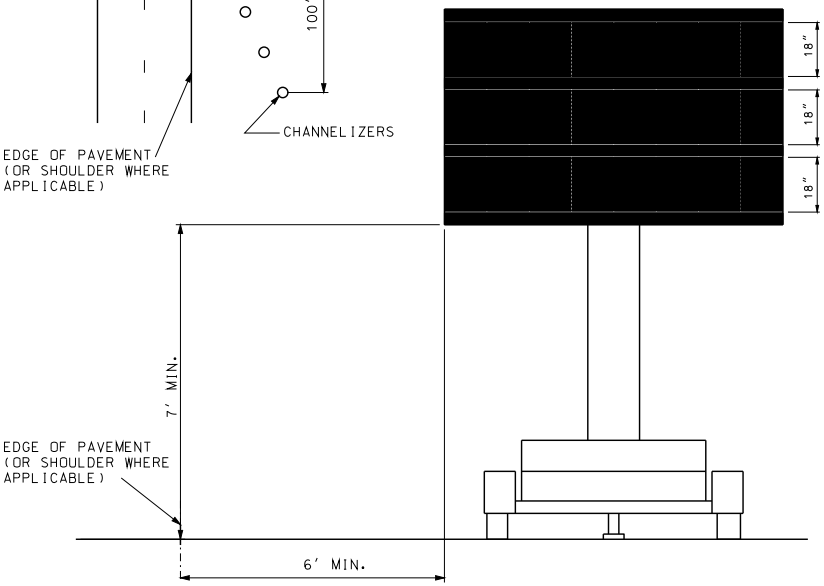


CHANGEABLE MESSAGE SIGN

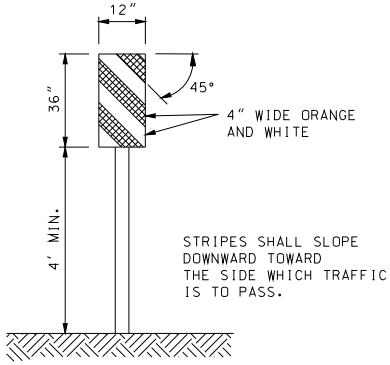


## TYPE 3 OBJECT MARKERS

WHITE AND ORANGE REFLECTIVE SHEETING SHALL BE IN ACCORDANCE WITH SEC 1042.2.7.3.

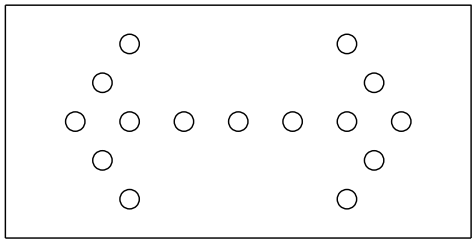

## FLASHING ARROW PANEL REQUIREMENTS

PANEL MOUNTING HEIGHT SHALL BE AT LEAST 7 FEET FROM THE ROADWAY SURFACE TO THE LOWEST POINT ON THE PANEL. THE BOTTOM OF THE PANEL SHALL BE RELATIVELY LEVEL WHEN IN USE.

MISSOURI HIGHWAYS AND TRANSPORTATION COMMISSION
105 WEST CAPITOL
JEFFERSON CITY, MO 65102
1-888-ASK-MODOT (1-888-275-6636)

STATE OF MISSOURI
KATHRYN PHILLIPS HARVEY
NUMBER PE-23751
PROFESSIONAL ENGINEER
THIS SHEET HAS BEEN SIGNED, SEALED AND DATED ELECTRONICALLY.

# TEMPORARY TRAFFIC CONTROL DEVICES

DATE EFFECTIVE: 05/01/2012
DATE PREPARED: 3/28/2012

616.10AP

SHEET NO. 4 OF 8

IF A SEAL IS PRESENT ON THIS SHEET IT HAS BEEN ELECTRONICALLY SEALED AND DATED.

## WARNING SIGNS

| SIGN | SIZE (IN.) | AREA (SQ. FT.) | COLOR SYM. LEG. BRD. | COLOR BACK GROUND | SHEETING | DESCRIPTION |
|---|---|---|---|---|---|---|
| SPECIAL | 36X36 | 9.00 | BK | FL. OR | R4 | FRESH OIL/LOOSE GRAVEL (3) |
| EO5-2 | 48X36 | 12.00 | BK | FL. OR | R4 | EXIT OPEN |
| EO5-2a | 48X36 | 12.00 | BK | FL. OR | R4 | EXIT CLOSED |
| WO1-1L | 48X48 | 16.00 | BK | FL. OR | R4 | TURN (SYMBOL LEFT ARROW) |
| WO1-1R | 48X48 | 16.00 | BK | FL. OR | R4 | TURN (SYMBOL RIGHT ARROW) |
| WO1-2L | 48X48 | 16.00 | BK | FL. OR | R4 | CURVE (SYMBOL LEFT ARROW) |
| WO1-2R | 48X48 | 16.00 | BK | FL. OR | R4 | CURVE (SYMBOL RIGHT ARROW) |
| WO1-3L | 48X48 | 16.00 | BK | FL. OR | R4 | REVERSE TURN (SYMBOL LEFT ARROW) |
| WO1-3R | 48X48 | 16.00 | BK | FL. OR | R4 | REVERSE TURN (SYMBOL RIGHT ARROW) |
| WO1-4L | 48X48 | 16.00 | BK | FL. OR | R4 | REVERSE CURVE (SYMBOL LEFT ARROW) |
| WO1-4R | 48X48 | 16.00 | BK | FL. OR | R4 | REVERSE CURVE (SYMBOL RIGHT ARROW) |
| WO1-4bL | 48X48 | 16.00 | BK | FL. OR | R4 | DOUBLE ARROW REVERSE CURVE (SYMBOL LEFT ARROWS) (2) |
| WO1-4bR | 48X48 | 16.00 | BK | FL. OR | R4 | DOUBLE ARROW REVERSE CURVE (SYMBOL RIGHT ARROWS) (2) |
| WO1-4cL | 48X48 | 16.00 | BK | FL. OR | R4 | TRIPLE ARROW REVERSE CURVE (SYMBOL LEFT ARROWS) (2) |
| WO1-4cR | 48X48 | 16.00 | BK | FL. OR | R4 | TRIPLE ARROW REVERSE CURVE (SYMBOL RIGHT ARROWS) (2) |
| WO1-6 | 60X30 | 12.50 | BK | FL. OR | R4 | HORIZONTAL ARROW (SYMBOL) |
| WO1-6a | 72X36 | 18.00 | BK | FL. OR | R4 | HORIZONTAL ARROW (SYMBOL ON PERMANENT BARRICADE) (1) |
| WO1-7 | 60X30 | 12.50 | BK | FL. OR | R4 | DOUBLE HEAD HORIZONTAL ARROW (SYMBOL) |
| WO1-7a | 72X36 | 18.00 | BK | FL. OR | R4 | DOUBLE HEAD HORIZONTAL ARROW (SYMBOL ON PERMANENT BARRICADE)(1) |
| WO1-8 | 18X24 | 3.00 | BK | FL. OR | R4 | CHEVRON (SYMBOL) |
| WO1-8a | 30X36 | 7.50 | BK | FL. OR | R4 | CHEVRON (SYMBOL FOR DIVIDED HIGHWAYS) |
| WO3-1 | 48X48 | 16.00 | BK | FL. OR | R4 | STOP AHEAD (SYMBOL) |
| WO3-2 | 48X48 | 16.00 | BK | FL. OR | R4 | YIELD AHEAD (SYMBOL) |
| WO3-3 | 48X48 | 16.00 | BK | FL. OR | R4 | SIGNAL AHEAD (SYMBOL) |
| WO3-4 | 48X48 | 16.00 | BK | FL. OR | R4 | BE PREPARED TO STOP |
| WO3-5 | 48X48 | 16.00 | BK | FL. OR | R4 | SPEED LIMIT AHEAD |
| WO4-1L | 48X48 | 16.00 | BK | FL. OR | R4 | MERGE (SYMBOL FROM LEFT) |
| WO4-1R | 48X48 | 16.00 | BK | FL. OR | R4 | MERGE (SYMBOL FROM RIGHT) |
| WO5-1 | 48X48 | 16.00 | BK | FL. OR | R4 | ROAD/BRIDGE/RAMP NARROWS (4) |
| WO5-3 | 48X48 | 16.00 | BK | FL. OR | R4 | ONE LANE BRIDGE |
| WO5-5 | 48X48 | 16.00 | BK | FL. OR | R4 | NARROW LANES (3) |
| WO6-1 | 48X48 | 16.00 | BK | FL. OR | R4 | DIVIDED HIGHWAY (SYMBOL) |
| WO6-2 | 48X48 | 16.00 | BK | FL. OR | R4 | DIVIDED HIGHWAY END (SYMBOL) |
| WO6-3 | 48X48 | 16.00 | BK | FL. OR | R4 | TWO WAY TRAFFIC (SYMBOL) |
| WO7-3a | 30X24 | 5.00 | BK | FL. OR | R4 | NEXT XX MILES (PLAQUE) |
| WO8-1 | 48X48 | 16.00 | BK | FL. OR | R4 | BUMP |
| WO8-2 | 48X48 | 16.00 | BK | FL. OR | R4 | DIP |
| WO8-3 | 48X48 | 16.00 | BK | FL. OR | R4 | PAVEMENT ENDS |
| WO8-4 | 48X48 | 16.00 | BK | FL. OR | R4 | SOFT SHOULDER |
| WO8-5 | 48X48 | 16.00 | BK | FL. OR | R4 | SLIPPERY WHEN WET (SYMBOL) |
| WO8-6 | 48X48 | 16.00 | BK | FL. OR | R4 | TRUCK CROSSING WITH FLAGS |
| WO8-6c | 48X48 | 16.00 | BK | FL. OR | R4 | TRUCK ENTRANCE (3) |
| WO8-7 | 36X36 | 9.00 | BK | FL. OR | R4 | LOOSE GRAVEL |
| WO8-9 | 48X48 | 16.00 | BK | FL. OR | R4 | LOW SHOULDER |
| WO8-11 | 48X48 | 16.00 | BK | FL. OR | R4 | UNEVEN LANES |
| WO8-12 | 48X48 | 16.00 | BK | FL. OR | R4 | NO CENTER LINE |
| WO8-15 | 48X48 | 16.00 | BK | FL. OR | R4 | GROOVED PAVEMENT |
| WO8-15p | 30X24 | 5.00 | BK | FL. OR | R4 | MOTORCYCLE (PLAQUE) |
| WO8-17 | 48X48 | 16.00 | BK | FL. OR | R4 | SHOULDER DROP-OFF (SYMBOL) |
| WO8-17p | 30X24 | 5.00 | BK | FL. OR | R4 | SHOULDER DROP-OFF (PLAQUE) |
| W10-1 | 42 RND. | 9.62 | BK | FL. YL | R4 | RAILROAD CROSSING |
| WO12-1 | 24X24 | 4.00 | BK | FL. OR | R4 | DOUBLE DOWN ARROW (SYMBOL) |
| WO12-2 | 48X48 | 16.00 | BK | FL. OR | R4 | LOW CLEARANCE (SYMBOL) |
| WO12-2x | 24X18 | 3.00 | BK | FL. OR | R4 | LOW CLEARANCE (PLAQUE) (3) |
| WO12-2a | 84X24 | 14.00 | BK | FL. OR | R4 | OVERHEAD LOW CLEARANCE (FEET AND INCHES) (3) |
| SPECIAL | 120X60 | 50.00 | BK | FL. OR | R4 | LOW CLEARANCE XX FT XX IN XX MILES AHEAD (3) |
| SPECIAL | 120X60 | 50.00 | BK | FL. OR | R4 | WIDTH RESTRICTION XX FT XX IN XX MILES AHEAD (3) |
| WO13-1 | 30X30 | 6.25 | BK | FL. OR | R4 | ADVISORY SPEED (PLAQUE) |
| WO16-2 | 30X24 | 5.00 | BK | FL. OR | R4 | XXX FEET (PLAQUE) |
| WO16-3 | 30X24 | 5.00 | BK | FL. OR | R4 | X MILE (PLAQUE) |
| WO20-1 | 48X48 | 16.00 | BK | FL. OR | R4 | ROAD/BRIDGE/RAMP WORK AHEAD (4) |
| WO20-2 | 48X48 | 16.00 | BK | FL. OR | R4 | DETOUR AHEAD |
| WO20-3 | 48X48 | 16.00 | BK | FL. OR | R4 | ROAD CLOSED AHEAD |
| WO20-4 | 48X48 | 16.00 | BK | FL. OR | R4 | ONE LANE ROAD AHEAD |
| WO20-5 | 48X48 | 16.00 | BK | FL. OR | R4 | RIGHT/CENTER/LEFT LANE CLOSED AHEAD (4) |

(1) SIGN DEPICTION, ARROW, BORDERS AND SPACING SHALL BE IN ACCORDANCE WITH THE LATEST EDITION OF "STANDARD HIGHWAY SIGNS" BY THE U.S. DEPARTMENT OF TRANSPORTATION - FHWA.

(2) REFER TO THE LATEST EDITION OF MUTCD PART VI BY THE U.S. DEPARTMENT OF TRANSPORTATION - FHWA FOR SIGN DEPICTION, ARROW, BORDERS AND SPACING SHALL CONFORM TO THE GUIDELINES SET FORTH IN THE LATEST EDITION OF "STANDARD HIGHWAY SIGNS" BY THE U.S. DEPARTMENT OF TRANSPORTATION - FHWA.

(3) ARROW, BORDERS AND SPACING SHALL BE IN ACCORDANCE WITH THE LATEST EDITION OF "STANDARD HIGHWAY SIGNS" BY THE U.S. DEPARTMENT OF TRANSPORTATION - FHWA.

(4) USE OF A SUPPLEMENTAL PLATE FOR LINE 1 IS ACCEPTABLE.

(5) PLAQUE AND APPLICABLE REGULATORY SIGN MAY BE MANUFACTURED AS ONE SIGN.

(6) R4 REFER TO SEC 1042.2.7.3.

GENERAL NOTES:

SIGN LAYOUTS SHALL BE IN ACCORDANCE WITH THE LATEST EDITION OF "STANDARD HIGHWAY SIGNS" BY THE U.S. DEPARTMENT OF TRANSPORTATION - FHWA, UNLESS SPECIFIED OTHERWISE.

SIGN DIMENSIONS SHOWN ARE MINIMUM. NO ADDITIONAL PAYMENT WILL BE MADE IF CONTRACTORS USE LARGER SIGNS.

NO ADDITIONAL PAYMENT WILL BE MADE FOR PLATES.

ALL PLAQUES SHALL HAVE A BORDER. PLATES SHALL NOT HAVE A BORDER.

MISSOURI HIGHWAYS AND TRANSPORTATION COMMISSION
105 WEST CAPITOL
JEFFERSON CITY, MO 65102
1-888-ASK-MODOT (1-888-275-6636)

STATE OF MISSOURI
KATHRYN PHILLIPS HARVEY
NUMBER PE-23751
PROFESSIONAL ENGINEER
THIS SHEET WAS SIGNED, SEALED AND DATED ELECTRONICALLY.

# TEMPORARY TRAFFIC CONTROL DEVICES

WARNING SIGNS

DATE EFFECTIVE: 05/01/2012
DATE PREPARED: 3/28/2012

616.10AP

SHEET NO. 5 OF 8

IF A SEAL IS PRESENT ON THIS SHEET IT HAS BEEN ELECTRONICALLY SEALED AND DATED.

| WARNING SIGNS | | | | | | | |
|---|---|---|---|---|---|---|---|
| SIGN | SIZE (IN.) | AREA (SQ. FT.) | COLOR SYM. LEG. BRD. | COLOR BACK GROUND | SHEETING | DESCRIPTION | |
| W020-5a | 48X48 | 16.00 | BK | FL. OR | R4 | 2 RIGHT/CENTER/LEFT LANES CLOSED AHEAD | (4) |
| SPECIAL W020-6a | 48X48 | 16.00 | BK | FL. OR | R4 | RIGHT/CENTER/LEFT LANE CLOSED | (3)(4) |
| W020-7 | 48X48 | 16.00 | BK | FL. OR | R4 | FLAGGER (SYMBOL) WITH FLAGS | |
| W021-2 | 36X36 | 9.00 | BK | FL. OR | R4 | FRESH OIL | |
| SPECIAL W021-5b | 48X48 | 16.00 | BK | FL. OR | R4 | SHOULDER WORK AHEAD | (3) |
| W022-1 | 48X48 | 16.00 | BK | FL. OR | R4 | BLASTING ZONE AHEAD | |
| W022-2 | 42X36 | 10.50 | BK | FL. OR | R4 | TURN OFF 2-WAY RADIO AND PHONE | |
| W022-3 | 42X36 | 10.50 | BK | FL. OR | R4 | END BLASTING ZONE | |
| SPECIAL W022-6e | 21X15 | 2.19 | BK | FL. OR | R4 | WET PAINT (ARROW PIVOTS) | (3) |
| | | | | | | | |
| GUIDE SIGNS | | | | | | | |
| E05-1 | 36X48 | 12.00 | BK | FL. OR | R4 | GORE EXIT | (3) |
| G020-1 | 60X24 | 10.00 | BK | FL. OR | R4 | ROAD WORK NEXT XX MILES | |
| G020-2 | 48X24 | 8.00 | BK | FL. OR | R4 | END ROAD WORK | |
| G020-4 | 36X18 | 4.50 | BK | FL. OR | R4 | PILOT CAR FOLLOW ME | |
| SPECIAL | 42X30 | 8.75 | BK | FL. OR | R4 | PLEASE WAIT FOR PILOT CAR | (3) |
| G020-5aP | 36X24 | 6.00 | BK | FL. OR | R4 | WORK ZONE (PLAQUE) | (3) (5) |
| M04-8a | 24X18 | 3.00 | BK | FL. OR | R4 | END DETOUR | |
| M04-9L | 48X36 | 12.00 | BK | FL. OR | R4 | DETOUR (LEFT ARROW) | |
| M04-9R | 48X36 | 12.00 | BK | FL. OR | R4 | DETOUR (RIGHT ARROW) | |
| M04-10L | 48X18 | 6.00 | BK | FL. OR | R4 | DETOUR (ARROW LEFT) | |
| M04-10R | 48X18 | 6.00 | BK | FL. OR | R4 | DETOUR (ARROW RIGHT) | |
| | | | | | | | |
| | | | | | | | |
| | | | | | | | |
| | | | | | | | |
| REGULATORY SIGNS | | | | | | | |
| R1-1 | 48X48 | 13.25 | WH | RD | R2 | STOP | |
| R1-2 | 48 TRI. | 6.93 | RD | WH | R2 | YIELD | |
| R1-2a | 36X36 | 9.00 | BK | WH | R2 | TO ONCOMING TRAFFIC (PLAQUE) | |
| R1-3 | 20X9 | 1.25 | WH | RD | R2 | X-WAY (PLAQUE) | |
| R2-1 | 36X48 | 12.00 | BK | WH | R2 | SPEED LIMIT XX | |
| R3-1 | 48X48 | 16.00 | BK/RD | WH | R2 | NO RIGHT TURN (SYMBOL) | |
| R3-2 | 48X48 | 16.00 | BK/RD | WH | R2 | NO LEFT TURN (SYMBOL) | |
| R3-3 | 36X36 | 9.00 | BK | WH | R2 | NO TURNS | |
| R3-4 | 48X48 | 16.00 | BK/RD | WH | R2 | NO U-TURN (SYMBOL) | |
| R3-7L | 30X30 | 6.25 | BK | WH | R2 | LEFT LANE MUST TURN LEFT | |
| R3-7R | 30X30 | 6.25 | BK | WH | R2 | RIGHT LANE MUST TURN RIGHT | |
| R4-1 | 36X48 | 12.00 | BK | WH | R2 | DO NOT PASS | |
| R4-2 | 36X48 | 12.00 | BK | WH | R2 | PASS WITH CARE | |
| R4-7a | 36X48 | 12.00 | BK | WH | R2 | KEEP RIGHT (HORIZONTAL ARROW) | |
| R4-8a | 36X48 | 12.00 | BK | WH | R2 | KEEP LEFT (HORIZONTAL ARROW) | |
| R5-1 | 30X30 | 6.25 | RD | WH | R2 | DO NOT ENTER | |
| R5-1a | 36X24 | 6.00 | WH | RD | R2 | WRONG WAY | |
| R6-1L | 48X18 | 6.00 | BK | WH | R2 | ONE WAY ARROW (LEFT) | |
| R6-1R | 48X18 | 6.00 | BK | WH | R2 | ONE WAY ARROW (RIGHT) | |
| R6-2L | 24X30 | 5.00 | BK | WH | R2 | ONE WAY (LEFT) | |
| R6-2R | 24X30 | 5.00 | BK | WH | R2 | ONE WAY (RIGHT) | |
| R10-6 | 24X36 | 6.00 | BK | WH | R2 | STOP HERE ON RED (45° ARROW) | |
| R11-2 | 48X30 | 10.00 | BK | WH | R2 | ROAD CLOSED | |
| R11-3a | 60X30 | 12.50 | BK | WH | R2 | ROAD CLOSED XX MILES AHEAD LOCAL TRAFFIC ONLY | |
| R11-4 | 60X30 | 12.50 | BK | WH | R2 | ROAD CLOSED TO THRU TRAFFIC | |
| CONST-3A | 60X48 | 20.00 | BK | WH/FL.OR | R2 | FINE SIGN | (3) |
| CONST-3X | 56X12 | 4.67 | BK | WH | R2 | SPEEDING/PASSING (PLATE) | (3) |
| | | | | | | | |
| SPECIAL SIGNS | | | | | | | |
| CONST-7-72 | 72X36 | 18.00 | WH/BL | BK/FL.OR | R2 | RATE OUR WORK ZONE | |
| CONST-7-48 | 48X24 | 8.00 | WH/BL | BK/FL.OR | R2 | RATE OUR WORK ZONE | |
| | | | | | | | |
| | | | | | | | |

(1) SIGN DEPICTION, ARROW, BORDERS AND SPACING SHALL BE IN ACCORDANCE WITH THE LATEST EDITION OF "STANDARD HIGHWAY SIGNS" BY THE U.S. DEPARTMENT OF TRANSPORTATION - FHWA.

(2) REFER TO THE LATEST EDITION OF MUTCD PART VI BY THE U.S. DEPARTMENT OF TRANSPORTATION - FHWA FOR SIGN DEPICTION, ARROW, BORDERS AND SPACING SHALL CONFORM TO THE GUIDELINES SET FORTH IN THE LATEST EDITION OF "STANDARD HIGHWAY SIGNS" BY THE U.S. DEPARTMENT OF TRANSPORTATION - FHWA.

(3) ARROW, BORDERS AND SPACING SHALL BE IN ACCORDANCE WITH THE LATEST EDITION OF "STANDARD HIGHWAY SIGNS" BY THE U.S. DEPARTMENT OF TRANSPORTATION - FHWA.

(4) USE OF A SUPPLEMENTAL PLATE FOR LINE 1 IS ACCEPTABLE.

(5) PLAQUE AND APPLICABLE REGULATORY SIGN MAY BE MANUFACTURED AS ONE SIGN.

(6) R2 REFER TO SEC 1042.2.7.2.

(7) R4 REFER TO SEC 1042.2.7.3.

GENERAL NOTES:

SIGN LAYOUTS SHALL BE IN ACCORDANCE WITH THE LATEST EDITION OF "STANDARD HIGHWAY SIGNS" BY THE U.S. DEPARTMENT OF TRANSPORTATION - FHWA, UNLESS SPECIFIED OTHERWISE.

SIGN DIMENSIONS SHOWN ARE MINIMUM. NO ADDITIONAL PAYMENT WILL BE MADE IF CONTRACTORS USE LARGER SIGNS.

NO ADDITIONAL PAYMENT WILL BE MADE FOR PLATES.

ALL PLAQUES SHALL HAVE A BORDER. PLATES SHALL NOT HAVE A BORDER.

MISSOURI HIGHWAYS AND TRANSPORTATION COMMISSION
105 WEST CAPITOL
JEFFERSON CITY, MO 65102
1-888-ASK-MODOT (1-888-275-6636)

STATE OF MISSOURI
KATHRYN PHILLIPS HARVEY
NUMBER PE-2007051
PROFESSIONAL ENGINEER
THIS SHEET HAS BEEN SIGNED, SEALED AND DATED ELECTRONICALLY.

# TEMPORARY TRAFFIC CONTROL DEVICES

## WARNING, GUIDE AND REGULATORY SIGNS

DATE EFFECTIVE: 05/01/2012
DATE PREPARED: 3/28/2012

616.10AP

SHEET NO. 6 OF 8

IF A SEAL IS PRESENT ON THIS SHEET IT HAS BEEN ELECTRONICALLY SEALED AND DATED.

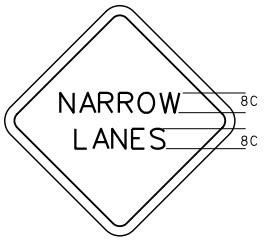


W05-5 (3)

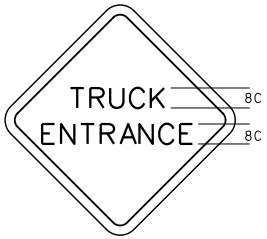


W08-6c (3)

W012-2x (3)

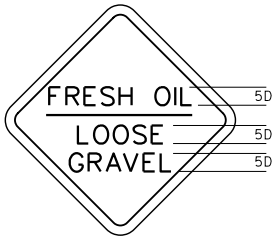


SPECIAL (3)

(1) SIGN DEPICTION, ARROW, BORDERS AND SPACING SHALL BE IN ACCORDANCE WITH THE LATEST EDITION OF "STANDARD HIGHWAY SIGNS" BY THE U.S. DEPARTMENT OF TRANSPORTATION - FHWA.

(2) REFER TO THE LATEST EDITION OF MUTCD PART VI BY THE U.S. DEPARTMENT OF TRANSPORTATION - FHWA FOR SIGN DEPICTION. ARROW, BORDERS AND SPACING SHALL CONFORM TO THE GUIDELINES SET FORTH IN THE LATEST EDITION OF "STANDARD HIGHWAY SIGNS" BY THE U.S. DEPARTMENT OF TRANSPORTATION - FHWA.

(3) ARROW, BORDERS AND SPACING SHALL BE IN ACCORDANCE WITH THE LATEST EDITION OF "STANDARD HIGHWAY SIGNS" BY THE U.S. DEPARTMENT OF TRANSPORTATION - FHWA.

(4) USE OF A SUPPLEMENTAL PLATE FOR LINE 1 IS ACCEPTABLE.

(5) PLAQUE AND APPLICABLE REGULATORY SIGN MAY BE MANUFACTURED AS ONE SIGN.

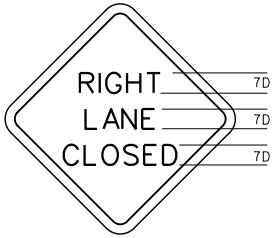


W020-6a (3)(4)

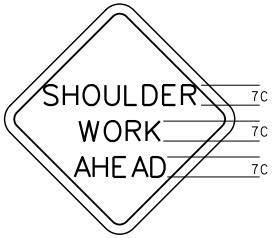


W021-5b (3)

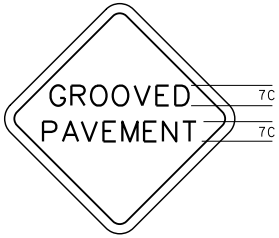


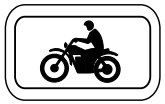

W08-15(3)
W08-15p

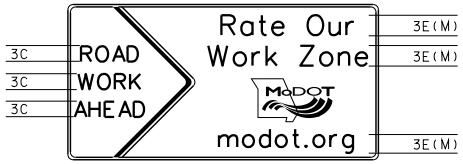


CONST-7-72
CONST-7-48

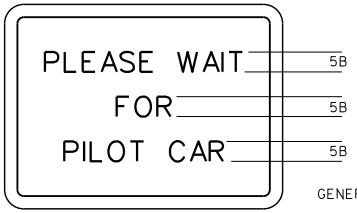


SPECIAL (3)

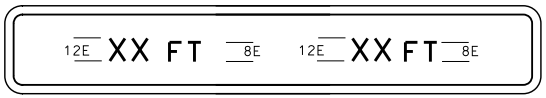


W012-2a (3)

GENERAL NOTES:

SIGN LAYOUTS SHALL BE IN ACCORDANCE WITH THE LATEST EDITION OF "STANDARD HIGHWAY SIGNS" BY THE U.S. DEPARTMENT OF TRANSPORTATION - FHWA UNLESS SPECIFIED OTHERWISE.

SIGN DIMENSIONS SHOWN ARE MINIMUM. NO ADDITIONAL PAYMENT WILL BE MADE IF CONTRACTORS USE LARGER SIGNS.

NO ADDITIONAL PAYMENT WILL BE MADE FOR PLATES.

ALL PLAQUES SHALL HAVE A BORDER. PLATES SHALL NOT HAVE A BORDER.

LETTER DIMENSIONS SHALL BE AS SHOWN.

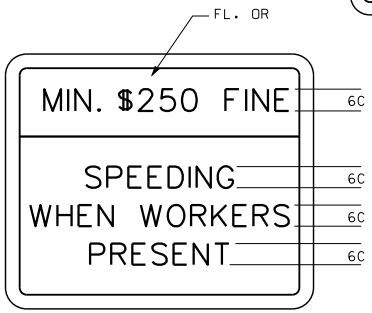


CONST-3A (3)

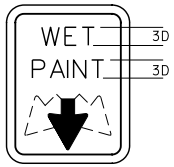


W022-6e (3)

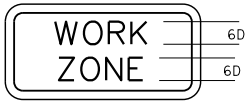


G020-5aP (3)

SPECIAL (3)

SPECIAL (3)

CONST-3X (3)

MISSOURI HIGHWAYS AND TRANSPORTATION COMMISSION
105 WEST CAPITOL
JEFFERSON CITY, MO 65102
1-888-ASK-MODOT (1-888-275-6636)

STATE OF MISSOURI
KATHRYN PHILLIPS HARVEY
NUMBER PE-2007051
PROFESSIONAL ENGINEER
THIS SHEET HAS BEEN SIGNED, SEALED AND DATED ELECTRONICALLY.

# TEMPORARY TRAFFIC CONTROL DEVICES

DATE EFFECTIVE: 05/01/2012
DATE PREPARED: 3/28/2012

616.10AP

SHEET NO. 7 OF 8

IF A SEAL IS PRESENT ON THIS SHEET IT HAS BEEN ELECTRONICALLY SEALED AND DATED.

LEGEND

- ○ – BOATS KEEP OUT (SIGN)
- ● – BOATS KEEP OUT (BUOY)
- ▲ – NO WAKE (BUOY)

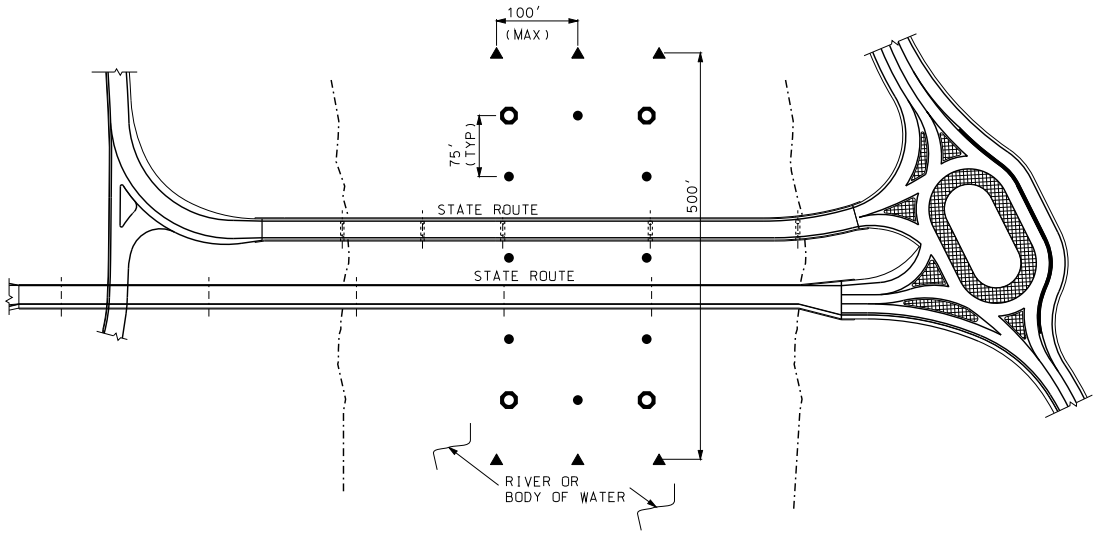


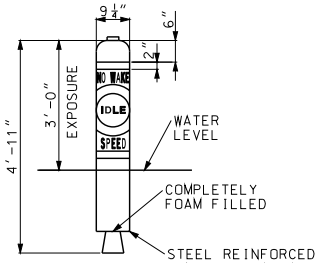


51 POUND ANCHOR
TACKLE PERMITTED

RESTRICTED AREA BUOY
("NO WAKE")
(6 REQUIRED – ROADWAY ITEM)

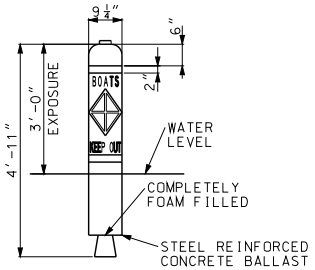


51 POUND ANCHOR
TACKLE PERMITTED

CONTROLLED AREA BUOY
("BOATS KEEP OUT")
(8 REQUIRED – ROADWAY ITEM)

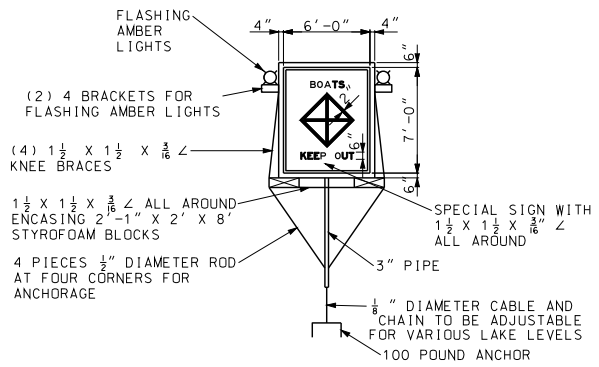


SPECIAL SIGN ASSEMBLY
("BOATS KEEP OUT")
(4 REQUIRED – ROADWAY ITEM)

GENERAL NOTES:

INFORMATION SHOWN IS SCHEMATIC ONLY. FINAL LOCATION AND NUMBER OF SIGNS AND BUOYS IS SUBJECT TO APPROVAL OF MISSOURI STATE WATER PATROL

THE DETAILS SHOWN ARE FOR BIDDING PURPOSES ONLY. ALL MATERIALS AND LABOR NECESSARY TO INSTALL AND REMOVE

SIGNS SHALL BE INCIDENTAL TO OTHER ITEMS

THE CONTRACTOR IS RESPONSIBLE FOR BUOY MAINTENANCE THROUGHOUT CONSTRUCTION AND FOR DETERMINING ANTICIPATED WATER LEVELS DURING CONSTRUCTION. EACH SIGN AND BUOY SHALL BE ANCHORED TO BOTTOM OF LAKE.

SIGNS SHALL BE DOUBLE FACED

EACH SIGN SHALL BE EQUIPPED WITH TWO (2) FLASHING LIGHT UNITS WITH AMBER LENS. FLASHING LIGHT UNITS SHALL BE FURNISHED AND MAINTAINED BY THE CONTRACTOR

ALL LETTERING TO BE BLACK IN COLOR IN BLOCK FORM.

FOR OTHER INFORMATION AND LOCATION OF SIGNS AND BUOYS SEE SPECIAL PROVISIONS.

SCHEMATIC SHOWN IS FOR ONE NAVIGATIONAL SPAN. FOR WORK ON OTHER SPANS MOVE APPROPRIATE SIGNS WITH NO DIRECT PAY

COLOR:
BACKGROUND – WHITE
LEGEND – BLACK
2" REFLECTIVE BAND AND SYMBOL – INTERNATIONAL ORANGE

IF A SEAL IS PRESENT ON THIS SHEET IT HAS BEEN ELECTRONICALLY SEALED AND DATED.

MISSOURI HIGHWAYS AND TRANSPORTATION COMMISSION
105 WEST CAPITOL
JEFFERSON CITY, MO 65102
1-888-ASK-MODOT (1-888-275-6636)

STATE OF MISSOURI
KATHRYN PHILLIPS HARVEY
NUMBER PE-23751
PROFESSIONAL ENGINEER
THIS SHEET HAS BEEN SIGNED, SEALED AND DATED ELECTRONICALLY.

# TEMPORARY TRAFFIC CONTROL DEVICES

## TRAFFIC CONTROL FOR WATERWAYS

| DATE EFFECTIVE: 05/01/2012 | 616.10AP | SHEET NO. 8 OF 8 |
|---|---|---|
| DATE PREPARED: 3/28/2012 | | |

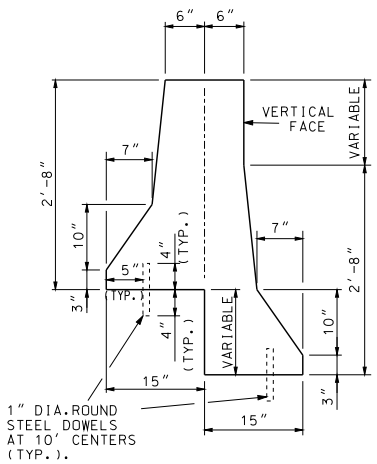


TYPICAL VIEW
BARRIER FOR
STEPPED PAVEMENT

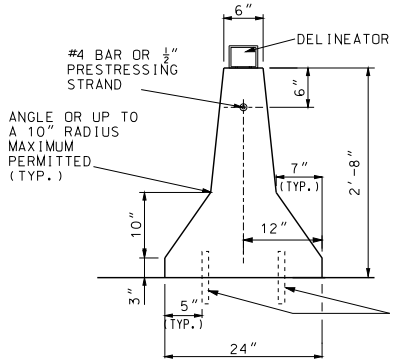


TYPICAL VIEW
TYPE A - TWO TRAFFIC FACES

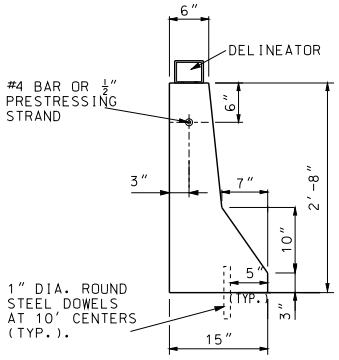


TYPICAL VIEW
TYPE B - ONE TRAFFIC FACE

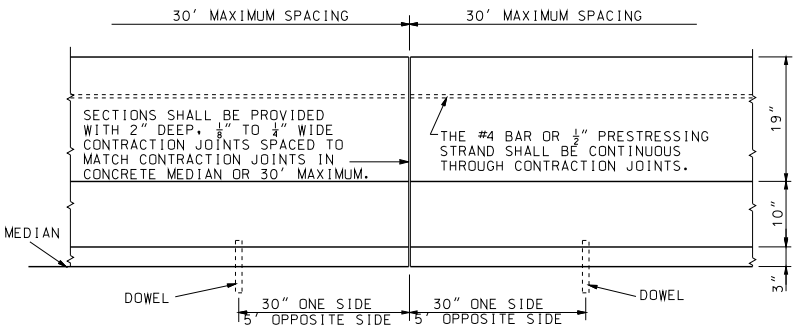


ELEVATION

(1) REFLECTORIZED SHEETING ON EITHER OR BOTH FACES OF DELINEATOR AS REQUIRED IN ACCORDANCE WITH SEC 1042.2.7.3.

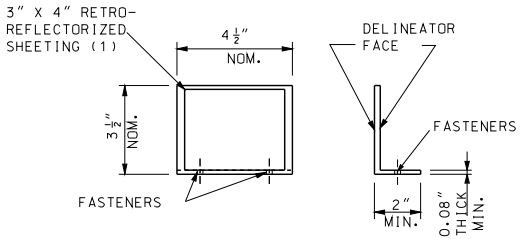


DELINEATOR

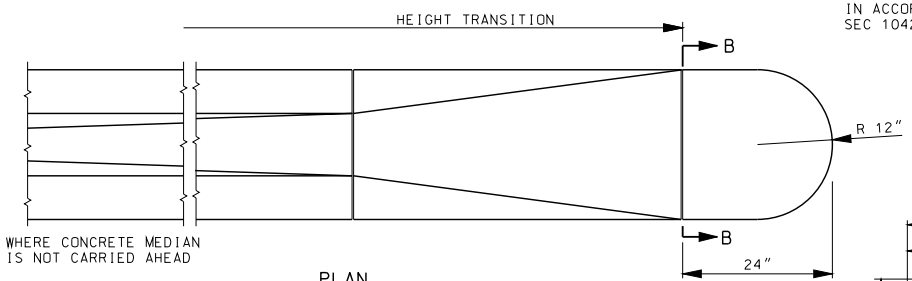


PLAN

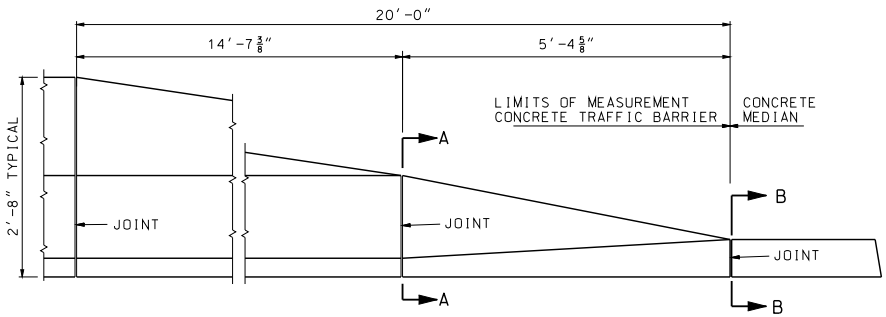


ELEVATION
**BARRIER HEIGHT TRANSITION**

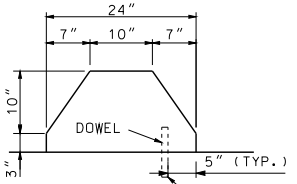


SECTION A-A

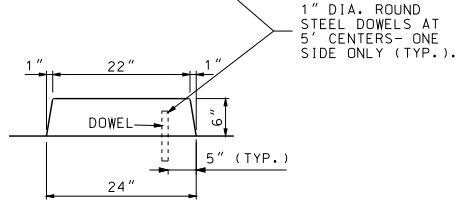


SECTION B-B

GENERAL NOTES:

HEIGHT TRANSITIONS SHALL NOT BE USED IN LOCATIONS WHERE THE POSTED SPEED IS GREATER THAN 35 MPH.

ALL TOP AND END EDGES SHALL BE CHAMFERED ¾ INCH.

EXPANSION JOINTS SHALL BE PROVIDED IN THE BARRIER TO MATCH EXPANSION JOINTS IN PAVEMENT.


MISSOURI HIGHWAYS AND TRANSPORTATION COMMISSION
105 WEST CAPITOL
JEFFERSON CITY, MO 65102
1-888-ASK-MODOT (1-888-275-6636)


STATE OF MISSOURI
KATHRYN PHILLIPS HARVEY
NUMBER PE-23751
PROFESSIONAL ENGINEER
THIS SHEET HAS BEEN SIGNED, SEALED AND DATED ELECTRONICALLY.

# PERMANENT CONCRETE TRAFFIC BARRIER

TYPE A AND B

| DATE EFFECTIVE: 02/01/2012 | 617.10G | SHEET NO. |
|---|---|---|
| DATE PREPARED: 12/19/2011 | | 1 OF 7 |

IF A SEAL IS PRESENT ON THIS SHEET IT HAS BEEN ELECTRONICALLY SEALED AND DATED.

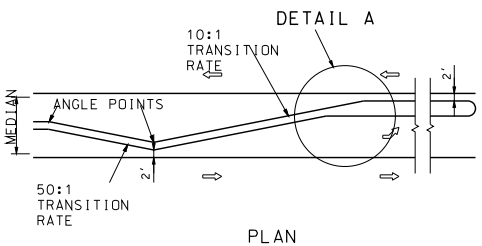


PLAN

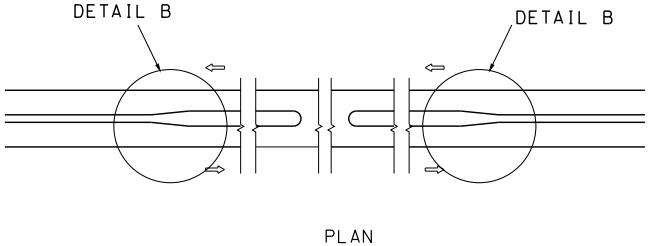


PLAN

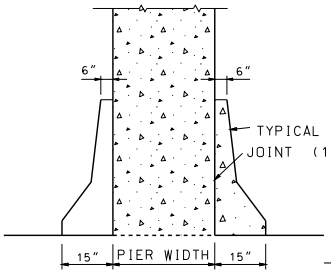


SECTION C-C

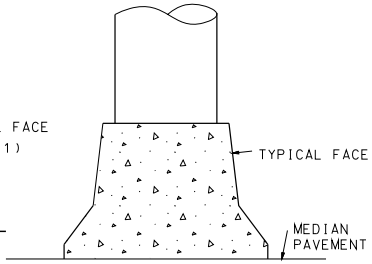


SECTION B-B

SEE SECTION C-C FOR DIMENSIONS

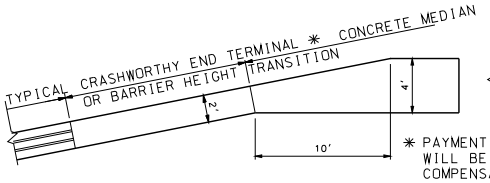


DETAIL A

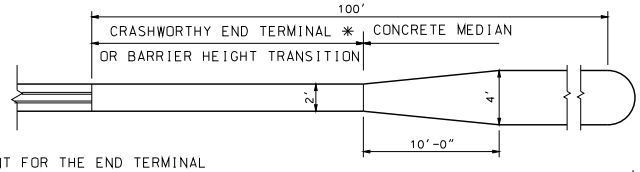


DETAIL B

* PAYMENT FOR THE END TERMINAL WILL BE CONSIDERED FULL COMPENSATION FOR END TERMINAL, BACKUP ASSEMBLIES, AND OTHER ITEMS NECESSARY FOR PROPER INSTALLATION AS REQUIRED BY THE MANUFACTURER.

## LEFT TURN LANE TRANSITION

## MEDIAN OPENING TRANSITION

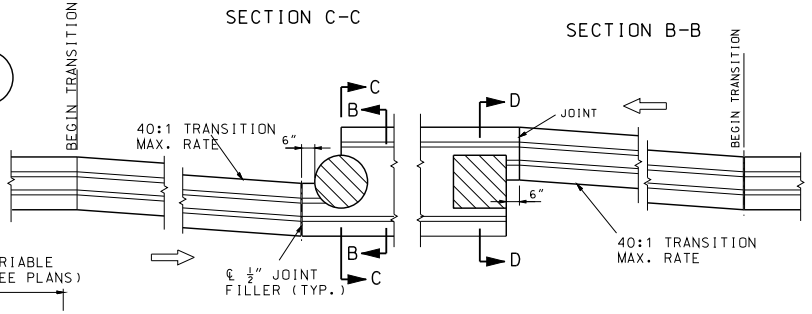


PLAN

## TRANSITION DETAILS FOR PIER PROTECTION

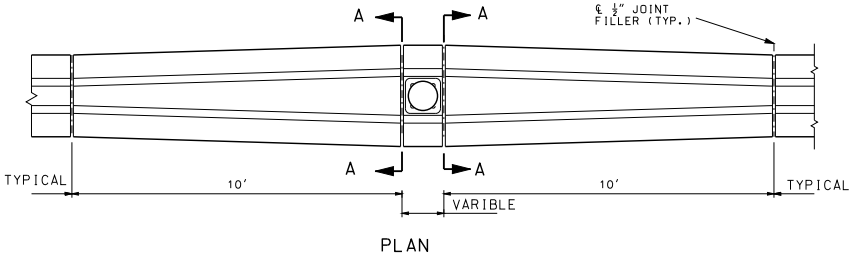


PLAN

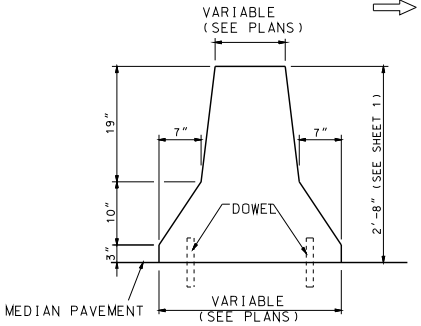


SECTION A-A

(1) 1 IN. JOINT WITH JOINT FILLER AND SEALER

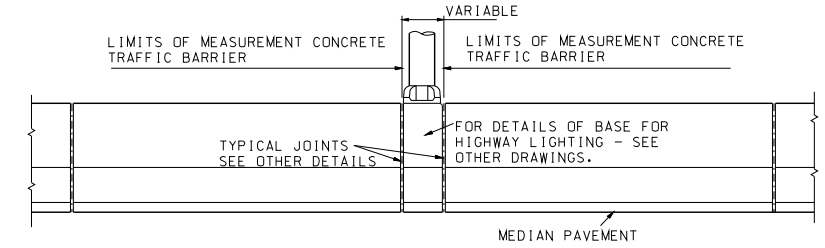


ELEVATION

## TRANSITION DETAILS FOR MEDIAN LIGHTING

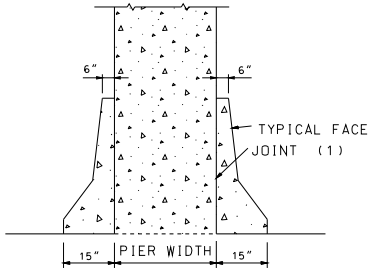


SECTION D-D

GENERAL NOTES:

FOR DETAILS AND LOCATION OF DOWELS, SEE SHEET 1.

MISSOURI HIGHWAYS AND TRANSPORTATION COMMISSION
105 WEST CAPITOL
JEFFERSON CITY, MO 65102
1-888-ASK-MODOT (1-888-275-6636)

STATE OF MISSOURI
KATHRYN PHILLIPS HARVEY
NUMBER PE-2375T
PROFESSIONAL ENGINEER
THIS SHEET HAS BEEN SIGNED, SEALED AND DATED ELECTRONICALLY.

# PERMANENT CONCRETE TRAFFIC BARRIER

TYPE A AND B

DATE EFFECTIVE: 02/01/2012
DATE PREPARED: 12/19/2011

617.10G

SHEET NO. 2 OF 7

IF A SEAL IS PRESENT ON THIS SHEET IT HAS BEEN ELECTRONICALLY SEALED AND DATED.

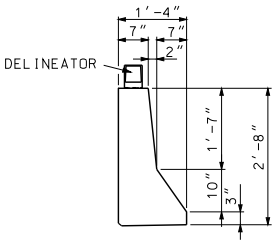


TYPE B (MODIFIED)
TYPICAL SECTION

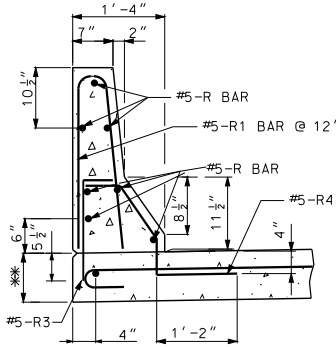


PART SECTION THROUGH BARRIER

| TABLE A<br>TRANSVERSE PAVEMENT REINFORCEMENT | |
|---|---|
| PAVEMENT THICKNESS ✻✻ | BAR SIZE & SPACING |
| 8″ | #5 @ 5″ |
| 9″ | #5 @ 6″ |
| 10″ | #5 @ 8″ |
| 11″ | #5 @ 9″ |
| ≥ 12″ | #6 @ 12″ |

NOTES:

ALL REINFORCING STEEL SHALL BE EPOXY COATED.

NO DIRECT PAYMENT WILL BE MADE FOR REINFORCING STEEL.

MINIMUM CLEARANCE TO REINFORCING STEEL SHALL BE 1½″, UNLESS OTHERWISE SHOWN.

✻✻ SEE ROADWAY PAVEMENT DESIGN.

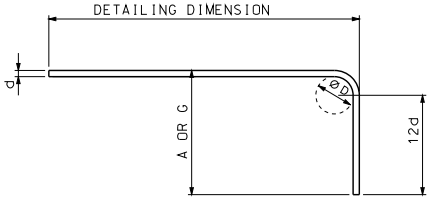


90° HOOKS

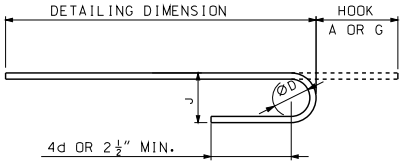


180° HOOKS

| END HOOK DIMENSIONS | | | | |
|---|---|---|---|---|
| BAR SIZE | D (IN.) | ALL GRADES | | |
| | | 180° HOOKS | | 90° HOOKS |
| | | A OR G | J | A OR G |
| #5 | 3¾″ | 7″ | 5″ | 10″ |
| #6 | 4½″ | 8″ | 6″ | 12″ |

ALL STANDARD HOOKS AND BENDS OTHER THAN 180° TO BE BENT WITH THE SAME PROCEDURE AS FOR 90° STANDARD HOOKS.

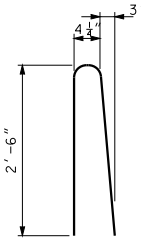


#5-R1

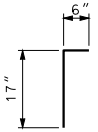


#5-R3

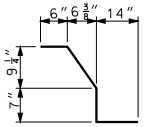


#5-R4

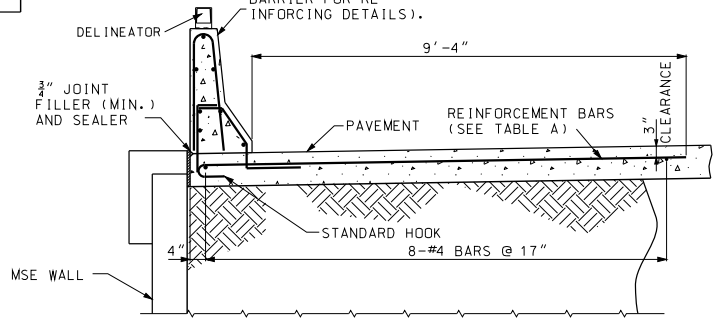


TYPE B TRAFFIC BARRIER ON TOP OF MSE WALL

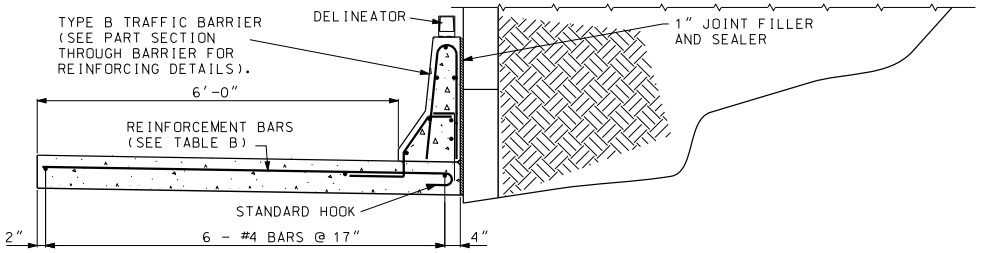


TYPE B TRAFFIC BARRIER AT THE SIDE OF MSE WALL

| TABLE B<br>TRANSVERSE PAVEMENT REINFORCEMENT | |
|---|---|
| PAVEMENT THICKNESS ✻✻ | BAR SIZE & SPACING |
| 8″ | #6 @ 6″ |
| 9″ | #6 @ 8″ |
| 10″ | #6 @ 9″ |
| 11″ | #6 @ 11″ |
| ≥ 12″ | #6 @ 12″ |

NOTES:

TYPE B (MODIFIED) SHALL BE USED ONLY AT LOCATIONS SHOWN IN PLANS.

FOR DELINEATOR DETAILS, SEE SHEET 1.

MISSOURI HIGHWAYS AND TRANSPORTATION COMMISSION
105 WEST CAPITOL
JEFFERSON CITY, MO 65102
1-888-ASK-MODOT (1-888-275-6636)

STATE OF MISSOURI
KATHRYN PHILLIPS HARVEY
NUMBER PE-23751
PROFESSIONAL ENGINEER
THIS SHEET HAS BEEN SIGNED, SEALED AND DATED ELECTRONICALLY.

# PERMANENT CONCRETE TRAFFIC BARRIER
AT MSE WALL
TYPE B

DATE EFFECTIVE: 02/01/2012
DATE PREPARED: 12/19/2011

617.10G

SHEET NO. 3 OF 7

IF A SEAL IS PRESENT ON THIS SHEET IT HAS BEEN ELECTRONICALLY SEALED AND DATED.

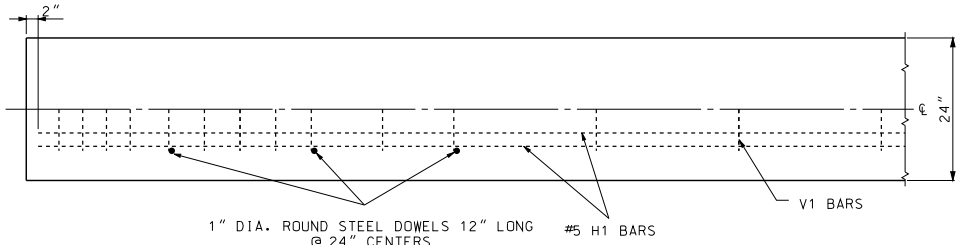


PLAN VIEW
(SYMMETRICAL ABOUT CENTERLINE)

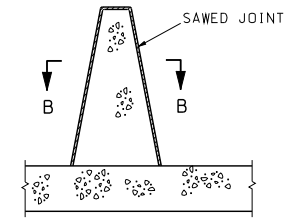


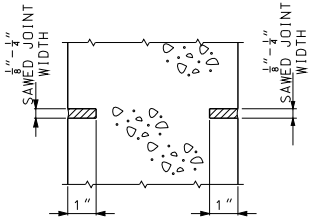


SECTION B-B

SECTION THROUGH SAWED JOINT

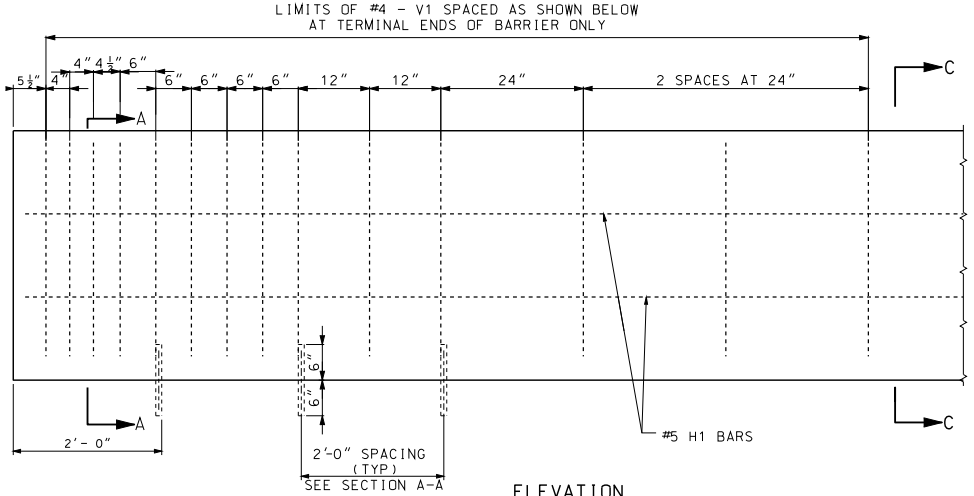


ELEVATION

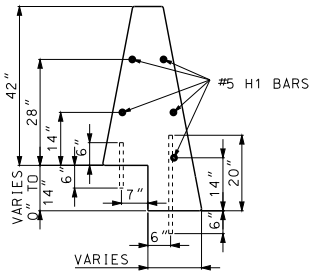


SECTION C-C
(STEPPED PAVEMENT)

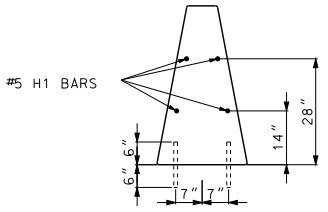


SECTION C-C
(NORMAL PAVEMENT)

NOTES:

BAR SPLICES SHALL BE A MINIMUM OF 24 TIMES THE NOMINAL DIAMETER OF THE BAR.

ANY REINFORCING BAR INSTALLATION METHOD DEVISED BY THE CONTRACTOR AND APPROVED BY THE ENGINEER THAT WILL ASSURE THE LONGITUDINAL REINFORCING STEEL WILL BE POSITIONED ±½ INCH AS DIMENSIONED WILL BE SATISFACTORY.

THE CONTRACTOR HAS THE OPTION TO SLIP-FORM THE BARRIER. IN WHICH CASE, ADDITIONAL REINFORCEMENT MAY BE TIED TO THE UPPER TWO-THIRDS OF THE REINFORCING CAGE TO PROVIDE BRACING.

SAWED JOINTS SHALL BE LOCATED AT PAVEMENT TRANSVERSE JOINTS.

FOR DELINEATOR DETAILS, SEE SHEET 1.

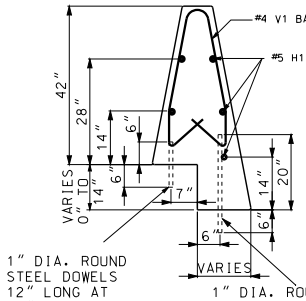


SECTION A-A
(STEPPED PAVEMENT)

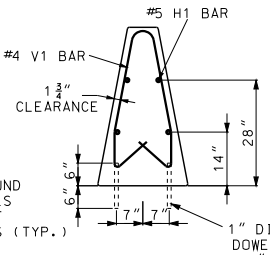


SECTION A-A
(NORMAL PAVEMENT)

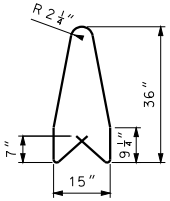


V1 BAR (#4)

REINFORCING DETAILS

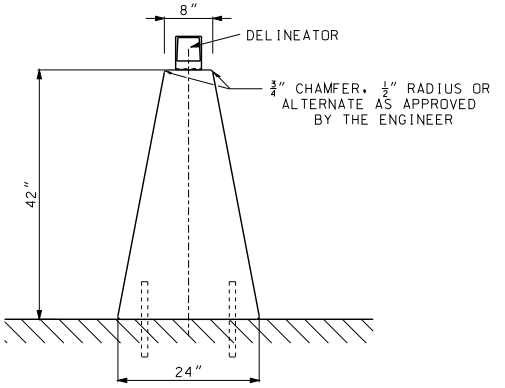


TYPE C
TYPICAL SECTION

IF A SEAL IS PRESENT ON THIS SHEET IT HAS BEEN ELECTRONICALLY SEALED AND DATED.

MISSOURI HIGHWAYS AND TRANSPORTATION COMMISSION
105 WEST CAPITOL
JEFFERSON CITY, MO 65102
1-888-ASK-MODOT (1-888-275-6636)

STATE OF MISSOURI
KATHRYN PHILLIPS HARVEY
NUMBER PE-23751
PROFESSIONAL ENGINEER
THIS SHEET HAS BEEN SIGNED, SEALED AND DATED ELECTRONICALLY.

# PERMANENT CONCRETE TRAFFIC BARRIER

TYPE C

DATE EFFECTIVE: 02/01/2012
DATE PREPARED: 12/19/2011

617.10G

SHEET NO. 4 OF 7

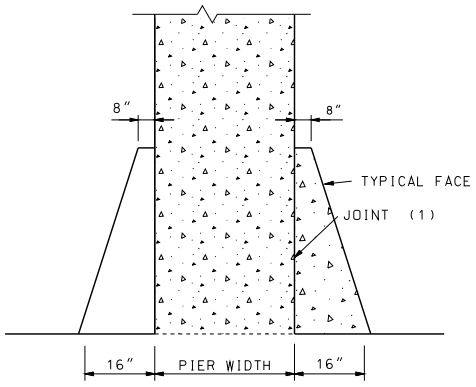


SECTION A-A

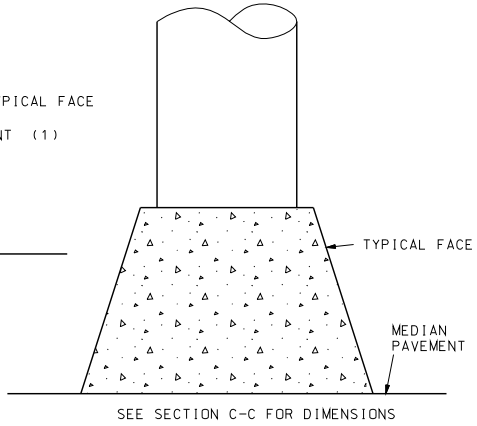


SEE SECTION C-C FOR DIMENSIONS

SECTION B-B

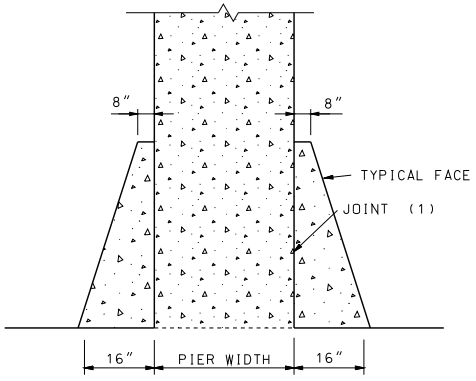


SECTION C-C

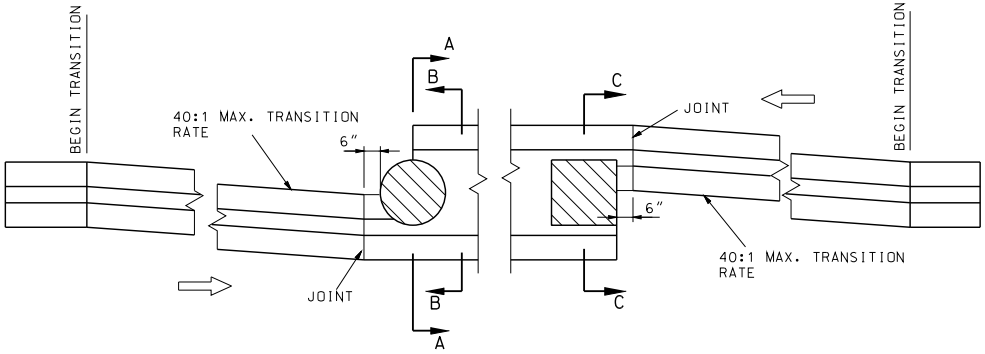


PLAN

## TRANSITION DETAILS FOR PIER PROTECTION

(1) 1 IN. JOINT WITH JOINT FILLER AND SEALER

MISSOURI HIGHWAYS AND TRANSPORTATION COMMISSION
105 WEST CAPITOL
JEFFERSON CITY, MO 65102
1-888-ASK-MODOT (1-888-275-6636)

STATE OF MISSOURI
KATHRYN PHILLIPS HARVEY
NUMBER PE-2375I
PROFESSIONAL ENGINEER
THIS SHEET HAS BEEN SIGNED, SEALED AND DATED ELECTRONICALLY.

# PERMANENT CONCRETE TRAFFIC BARRIER

TYPE C

DATE EFFECTIVE: 02/01/2012
DATE PREPARED: 12/19/2011

617.10G

SHEET NO. 5 OF 7

IF A SEAL IS PRESENT ON THIS SHEET IT HAS BEEN ELECTRONICALLY SEALED AND DATED.

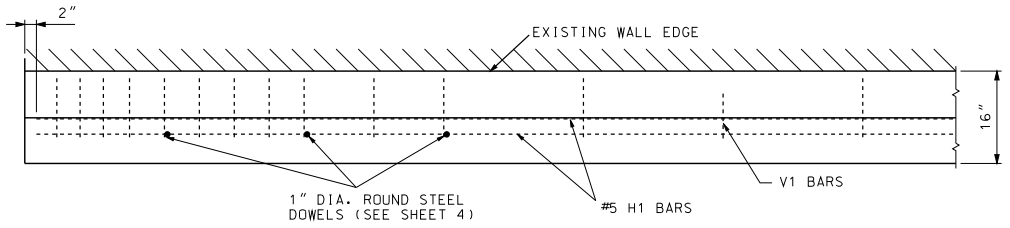


PLAN VIEW

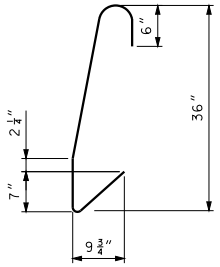


V1 BAR (#4)

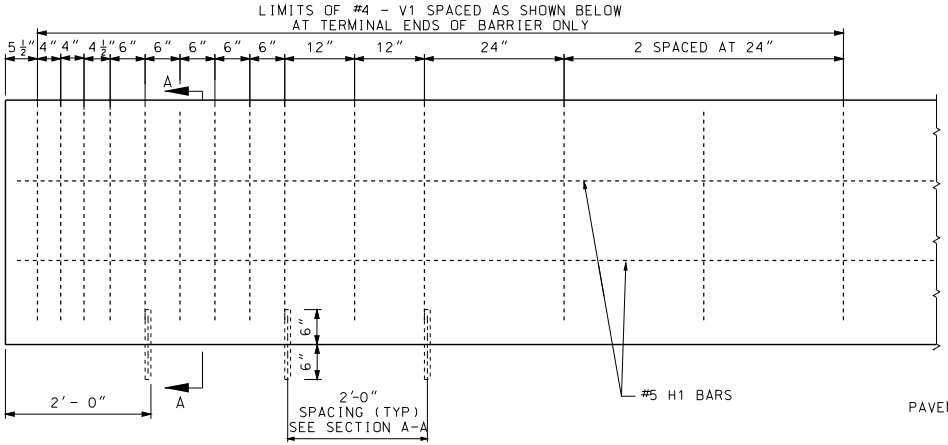


ELEVATION

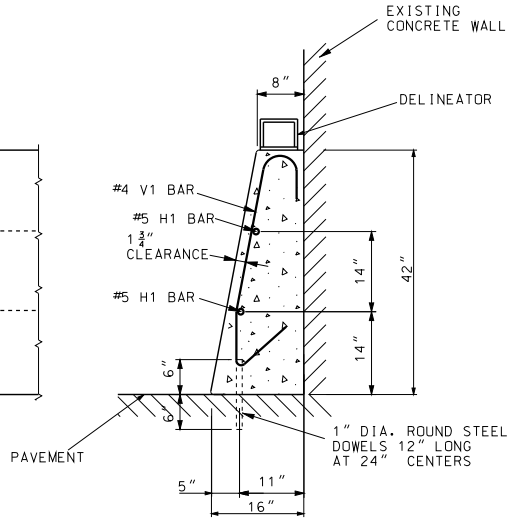


SECTION A-A

## REINFORCING DETAILS

NOTES:

BAR SPLICES SHALL BE A MINIMUM OF 24 TIMES THE NOMINAL DIAMETER OF THE BAR.

ANY METHOD DEVISED BY THE CONTRACTOR AND APPROVED BY THE ENGINEER THAT WILL ASSURE THE LONGITUDINAL REINFORCING STEEL WILL BE POSITIONED ± ½ INCH AS DIMENSIONED WILL BE SATISFACTORY.

THE CONTRACTOR HAS THE OPTION TO SLIP-FORM THE BARRIER. IN WHICH CASE, ADDITIONAL REINFORCEMENT MAY BE TIED TO THE UPPER TWO-THIRDS OF THE REINFORCING CAGE TO PROVIDE BRACING.

THIS BARRIER SHALL NOT BE USED TO SUPPORT HIGHWAY LIGHTING POLES.

THIS BARRIER SHALL NOT BE USED FOR BRIDGE ROADWAY APPLICATIONS.

SAWED JOINTS SHALL BE LOCATED AT PAVEMENT TRANSVERSE JOINTS.

TYPE D SHALL BE USED ONLY AT LOCATIONS SHOWN ON PLANS.

FOR DELINEATOR DETAILS, SEE SHEET 1.

MISSOURI HIGHWAYS AND TRANSPORTATION COMMISSION
105 WEST CAPITOL
JEFFERSON CITY, MO 65102
1-888-ASK-MODOT (1-888-275-6636)

STATE OF MISSOURI
KATHRYN PHILLIPS HARVEY
NUMBER PE-2007051
PROFESSIONAL ENGINEER
THIS SHEET HAS BEEN SIGNED, SEALED AND DATED ELECTRONICALLY.

# PERMANENT CONCRETE TRAFFIC BARRIER

TYPE D

DATE EFFECTIVE: 02/01/2012
DATE PREPARED: 12/19/2011

617.10G

SHEET NO. 6 OF 7

IF A SEAL IS PRESENT ON THIS SHEET IT HAS BEEN ELECTRONICALLY SEALED AND DATED.

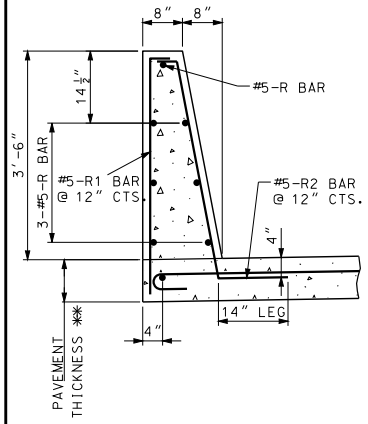


PART SECTION THROUGH BARRIER

| TABLE A TRANSVERSE PAVEMENT REINFORCEMENT | |
|---|---|
| PAVEMENT THICKNESS ✳✳ | BAR SIZE & SPACING |
| 8″ | #5 @ 4″ |
| 9″ | #5 @ 5″ |
| 10″ | #5 @ 6″ |
| 11″ | #5 @ 7″ |
| 12″ | #6 @ 12″ |
| ≥ 13″ | #6 @ 12″ |

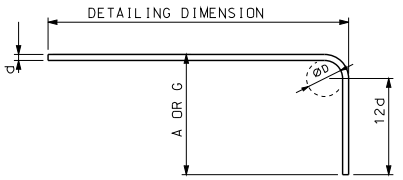


90° HOOKS

| END HOOK DIMENSIONS | | | | |
|---|---|---|---|---|
| BAR SIZE | D (IN.) | ALL GRADES | | |
| | | 180° HOOKS | | 90° HOOKS |
| | | A OR G | J | A OR G |
| #5 | 3¾″ | 7″ | 5″ | 10″ |
| #6 | 4½″ | 8″ | 6″ | 12″ |

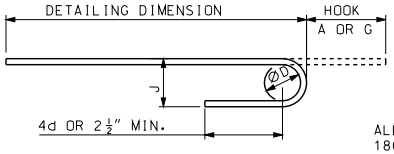


180° HOOKS

ALL STANDARD HOOKS AND BENDS OTHER THAN 180° TO BE BENT WITH THE SAME PROCEDURE AS FOR 90° STANDARD HOOKS.

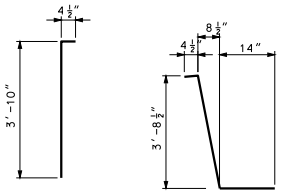


#5 R1 #5 R2

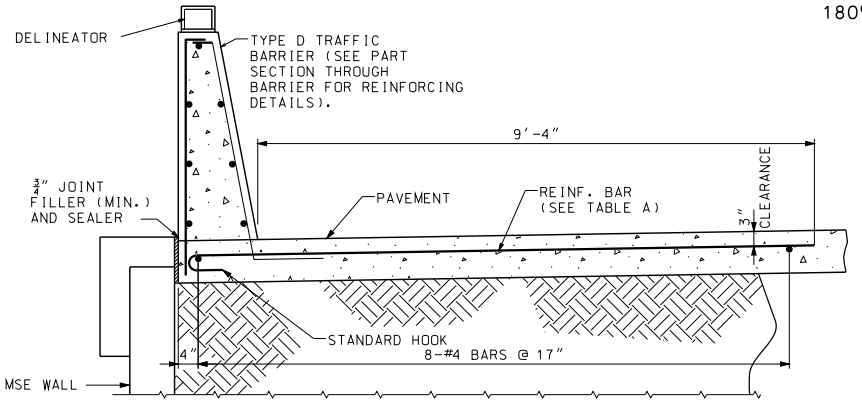


TYPE D (MSE WALL) TRAFFIC BARRIER ON TOP OF MSE WALL

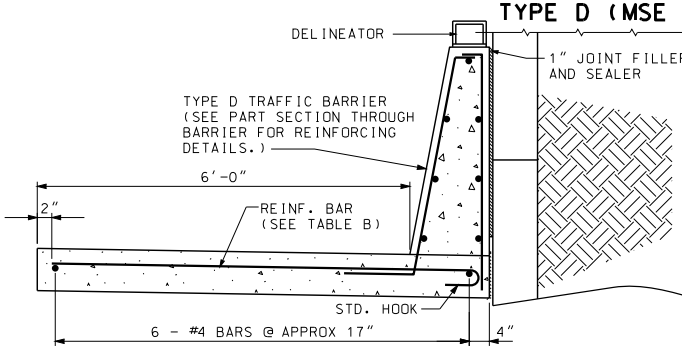


TYPE D TRAFFIC BARRIER AT THE SIDE OF MSE WALL

| TABLE B TRANSVERSE PAVEMENT REINFORCEMENT | |
|---|---|
| PAVEMENT THICKNESS ✳✳ | BAR SIZE & SPACING |
| 8″ | #6 @ 5″ |
| 9″ | #6 @ 6″ |
| 10″ | #5 @ 6″ |
| 11″ | #6 @ 8″ |
| 12″ | #6 @ 9″ |
| ≥ 13″ | #6 @ 9″ |

NOTES:

MINIMUM CLEARANCE TO REINFORCING STEEL SHALL BE 1½″, UNLESS OTHERWISE SHOWN.

✳✳ SEE ROADWAY PAVEMENT DESIGN.

TYPE D SHALL BE USED ONLY AT LOCATIONS SHOWN ON PLANS.

FOR DELINEATOR DETAILS, SEE SHEET 1.

GENERAL NOTES:

MISSOURI HIGHWAYS AND TRANSPORTATION COMMISSION
105 WEST CAPITOL
JEFFERSON CITY, MO 65102
1-888-ASK-MODOT (1-888-275-6636)

STATE OF MISSOURI KATHRYN PHILLIPS HARVEY NUMBER PE-23751 PROFESSIONAL ENGINEER
THIS SHEET HAS BEEN SIGNED, SEALED AND DATED ELECTRONICALLY.

# PERMANENT CONCRETE TRAFFIC BARRIER

AT MSE WALL
TYPE D

DATE EFFECTIVE: 02/01/2012
DATE PREPARED: 12/19/2011

617.10G

SHEET NO. 7 OF 7

IF A SEAL IS PRESENT ON THIS SHEET IT HAS BEEN ELECTRONICALLY SEALED AND DATED.

| CROSS SECTION | CONDITION | | TREATMENT | SIGN | |
|---|---|---|---|---|---|
| | DIFFERENTIAL | TIME | | MAINLINE (2) | SIDE ROAD (3) |
| 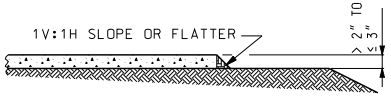 | PAVEMENT EDGE DIFFERENTIAL > 2" TO ≤ 3" | NON-WORKING HOURS | WEDGE SLOPE TO 1V:1H OR FLATTER | WO8-17 (4)(5) WO8-17p (8) | NO SIGNS REQUIRED |
| | | WORKING HOURS | NO EDGE TREATMENT REQUIRED | | |
| 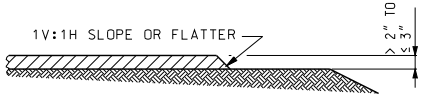 | PAVEMENT EDGE DIFFERENTIAL > 2" TO ≤ 3" | NON-WORKING HOURS | WEDGE SLOPE TO 1V:1H OR FLATTER | WO8-17 (4)(5) WO8-17p (8) | NO SIGNS REQUIRED |
| | | WORKING HOURS | NO EDGE TREATMENT REQUIRED | | |
| | PAVEMENT EDGE DIFFERENTIAL > 3" | NON-WORKING HOURS | WEDGE SLOPE TO 1V:3H OR FLATTER | WO8-17 (4)(5) WO8-17p (8) | 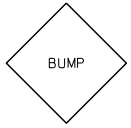 WO8-1 (4) |
| | | WORKING HOURS | DELINEATE DIFFERENTIAL WITH CHANNELIZERS | | |
| 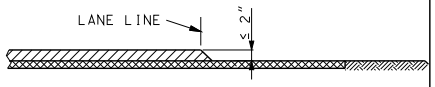 | LANE LINE DIFFERENTIAL ≤ 2" | NON-WORKING AND WORKING HOURS | NO EDGE TREATMENT REQUIRED | WO8-11 (6) | NO SIGNS REQUIRED |
| 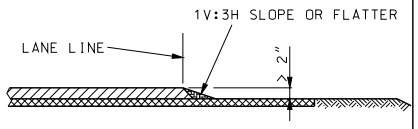 | LANE LINE DIFFERENTIAL > 2" | NON-WORKING AND WORKING HOURS WHERE LANES OPEN TO TRAFFIC | WEDGE SLOPE TO 1V:3H OR FLATTER | 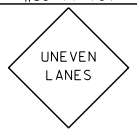 WO8-11 (6) | 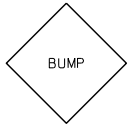 WO8-1 |
| | | NON-WORKING AND WORKING HOURS WHERE LANE CLOSED TO TRAFFIC | DELINEATE DIFFERENTIAL WITH CHANNELIZERS | | |
| 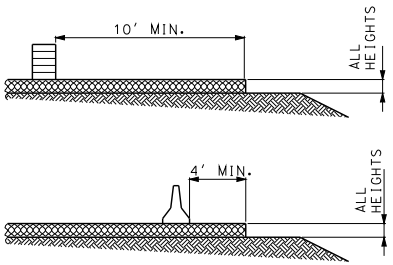 | ANY PAVEMENT EDGE OR LANE LINE DIFFERENTIAL | NON-WORKING AND WORKING HOURS WHERE PLANS REQUIRE ADJACENT LANE CLOSURE WITH CHANNELIZATION OR PARTIAL LANE CLOSURE WITH BARRIER. | NO EDGE TREATMENT REQUIRED | NO SIGNS REQUIRED | NO SIGNS REQUIRED |

(1) SIGNS SHALL BE VISIBLE TO TRAFFIC ONLY WHEN AND WHERE CONDITIONS EXIST.

(2) SIGNS SHALL BE SPACED AT APPROXIMATELY ONE MILE INTERVALS AND LOCATED WITHIN 150 FT. BEYOND ANY STATE ROADS. WHEN A SIGN PLACED AT THE ONE MILE INTERVAL FALLS WITHIN 1/2 MILE OF A SIGN PLACED AFTER AN INTERSECTION, THE SIGN PLACED AT THE 1/2 MILE INTERVAL MAY BE OMITTED. WHEN LOW SHOULDER/SHOULDER DROP-OFF SIGNS WITH UNEVEN LANES ARE BOTH SPECIFIED, ALTERNATING SIGN MESSAGES SHALL BE USED AT 1 MILE SPACINGS.

(3) ON SIDE ROADS WITH POSTED SPEED OF 45 MPH OR GREATER, SIGNS SHALL BE PLACED 150 FT. IN ADVANCE OF INTERSECTION WITH MAINLINE.

(4) SIGNS SHALL BE LOCATED ON THE SIDE OF THE ROADWAY WHERE THE PAVEMENT EDGE DIFFERENTIAL EXISTS. ON TWO-LANE UNDIVIDED HIGHWAYS, BACK-TO-BACK SIGNS SHALL BE PROVIDED ON THE SIDE OF THE ROADWAY, WHERE THE PAVEMENT EDGE DIFFERENTIAL EXISTS. "BACK TO BACK" SIGNS SHALL BE SEPARATED BY 7-10 FEET.

(5) SIGNS TO REMAIN VISIBLE UNTIL SHOULDER SHAPING IS COMPLETE.

(6) SIGNS SHALL BE LOCATED ON RIGHT SIDE OF NON-DIVIDED HIGHWAYS AND ON BOTH SIDES OF DIVIDED HIGHWAYS WHERE A LANE LINE DIFFERENTIAL EXISTS.

(7) FOR ADDITIONAL SIGN SPACING AND DETAILS SEE STD PLAN 620.10.

(8) WHEN THE SHOULDER DROP-OFF SIGNS ARE IN PLACE FOR GREATER THAN THREE DAYS, THE SHOULDER DROP-OFF PLAQUE SHOULD BE USED IN ADDITION WITH THE SHOULDER DROP-OFF SIGN.

LEGEND

- RIGID PAVEMENT
- FLEXIBLE PAVEMENT
- ALL PAVEMENT TYPES

IF A SEAL IS PRESENT ON THIS SHEET IT HAS BEEN ELECTRONICALLY SEALED AND DATED.

MISSOURI HIGHWAYS AND TRANSPORTATION COMMISSION
105 WEST CAPITOL
JEFFERSON CITY, MO 65102
1-888-ASK-MODOT (1-888-275-6636)

STATE OF MISSOURI
KATHRYN PHILLIPS HARVEY
NUMBER PE-23751
PROFESSIONAL ENGINEER
THIS SHEET HAS BEEN SIGNED, SEALED AND DATED ELECTRONICALLY.

# PAVEMENT EDGE TREATMENT

DATE EFFECTIVE: 05/01/2012
DATE PREPARED: 3/28/2012

619.10G

SHEET NO. 1 OF 1

A = WIDTH AS SPECIFIED IN PLANS.

L = S x W WHEN POSTED SPEED 45 MPH OR GREATER OR $WS^2$ /60 WHEN POSTED SPEED IS 40 MPH OR LESS.

L = LENGTH OF TAPER IN FEET.

S = OFF PEAK 85 PERCENTILE SPEED IN MPH.

W = OFFSET DISTANCE IN FEET.

DISTANCE (L) SHALL BE EXTENDED AS REQUIRED BY SIGHT DISTANCE CONDITIONS.

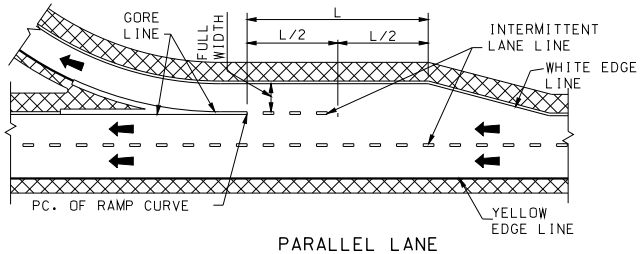


PARALLEL LANE

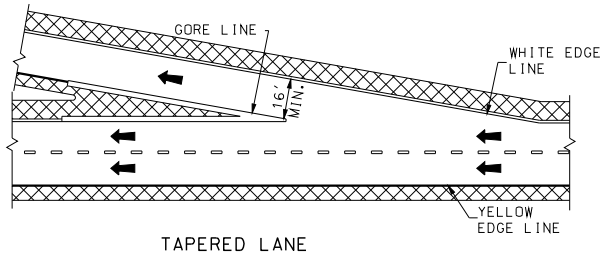


TAPERED LANE

## EXIT RAMP MARKING

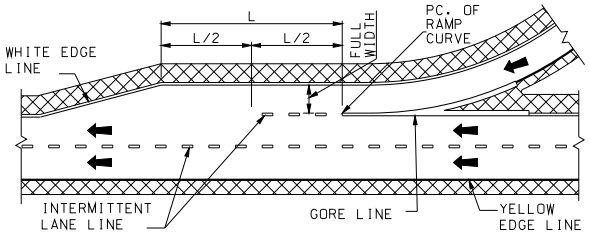


PARALLEL LANE

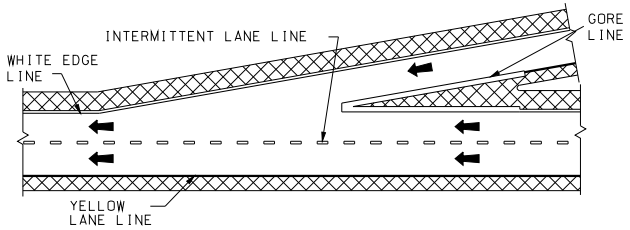


TAPERED LANE

## ENTRANCE RAMP MARKING

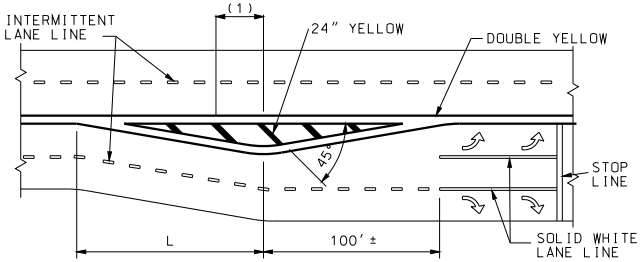


OFFSET ONE LANE

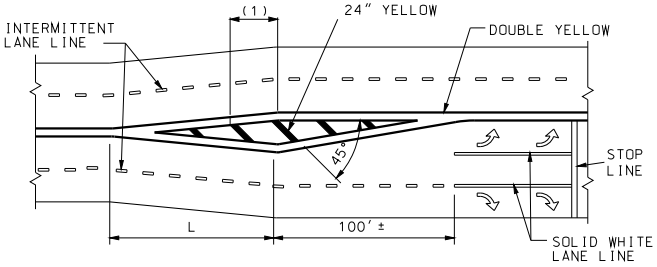


OFFSET BOTH LANES

## MEDIAN ISLAND LEFT TURN LANE MARKING

(1) 50' (TYP.) SPACE BETWEEN BARS. A MINIMUM OF 3 BARS ARE REQUIRED. IF NECESSARY, THE DISTANCE BETWEEN THE BARS SHALL BE DECREASED TO INSTALL 3 BARS.

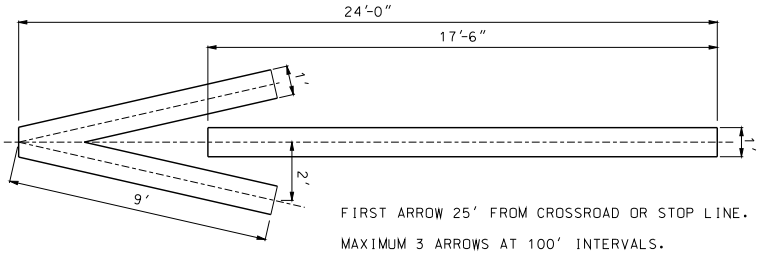


FIRST ARROW 25' FROM CROSSROAD OR STOP LINE.

MAXIMUM 3 ARROWS AT 100' INTERVALS.

ON MULTI-LANE RAMP USE ARROW IN EACH LANE.

WRONG WAY ARROWS ARE NOT USED WHEN RAMP HAS LANE USE CONTROL ARROWS.

## OFF RAMP WRONG WAY ARROW

GENERAL NOTES:

REFER TO THE STANDARD PLAN 626.00 WHEN INSTALLING PAVEMENT MARKINGS OVER RUMBLE STRIPS.

LANE LINES SHALL BE AN INTERMITTENT OR SOLID WHITE.

INTERMITTENT LINES SHALL BE 10 FEET IN LENGTH SEPARATED BY 30 FOOT GAPS.

EDGELINES SHALL BE CONTINUOUS SOLID WHITE OR YELLOW LINES. RIGHT SIDE EDGELINES SHALL BE SOLID WHITE. MEDIAN OR LEFT SIDE EDGELINES ON DIVIDED HIGHWAYS AND ON THE LEFT SIDE OF RAMPS SHALL BE SOLID YELLOW. EDGELINES SHALL BE CONTINUOUS ACROSS DRIVEWAYS AND MINOR INTERSECTING ROADS.

"NO PASSING" LINES SHALL BE CONTINUOUS SOLID YELLOW.

"NO PASSING" LINES SHALL BE PLACED AS SHOWN IN "LINE DETAIL". "NO PASSING" LINES ON A TWO-LANE, TWO-WAY HIGHWAY WHEN PASSING IS PROHIBITED IN EACH DIRECTION SHALL BE PLACED 4 INCHES APART AND THE INTERMITTENT CENTERLINE SHALL BE OMITTED.

STOP LINES SHALL BE A SOLID WHITE TRANSVERSE LINE 24 INCHES WIDE, LOCATED AT LEAST 4 FEET FROM THE NEAREST EDGE OF THE INTERSECTING ROADWAY.

CROSSWALK LINES SHALL BE SOLID WHITE TRANSVERSE LINES 6 INCHES WIDE AT LEAST 6 FEET APART. CROSSWALK LINES ON THE INTERSECTION SIDE OF THE CROSSWALK SHALL MEET AT THE CURB.

GORE LINES SHALL BE A SOLID WHITE LINE WITH A WIDTH TWICE THAT OF THE EDGELINE.

ARROWS AND WORD SYMBOLS SHALL BE SOLID WHITE.


MISSOURI HIGHWAYS AND TRANSPORTATION COMMISSION
105 WEST CAPITOL
JEFFERSON CITY, MO 65102
1-888-ASK-MODOT (1-888-275-6636)


STATE OF MISSOURI
KATHRYN PHILLIPS HARVEY
NUMBER PE-23751
PROFESSIONAL ENGINEER
THIS SHEET HAS BEEN SIGNED, SEALED AND DATED ELECTRONICALLY.

# PAVEMENT MARKING

| DATE EFFECTIVE: | 12/01/2009 | 620.00J | SHEET NO. 1 OF 5 |
|---|---|---|---|
| DATE PREPARED: | 12/8/2010 | | |

IF A SEAL IS PRESENT ON THIS SHEET IT HAS BEEN ELECTRONICALLY SEALED AND DATED.

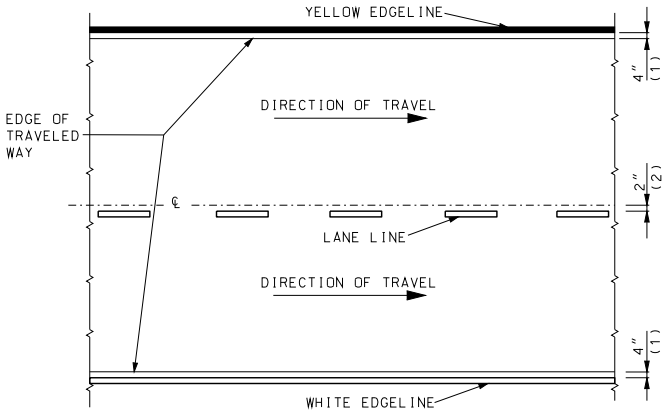


DIVIDED PAVEMENT

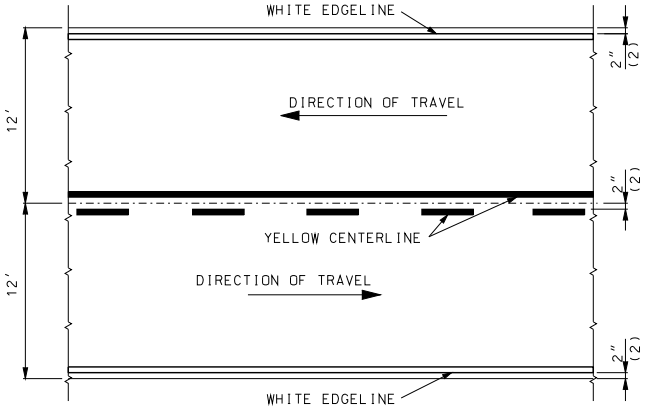


TWO-LANE TWO-WAY

## TYPICAL STRIPING OFFSETS WITHOUT RUMBLE STRIPES

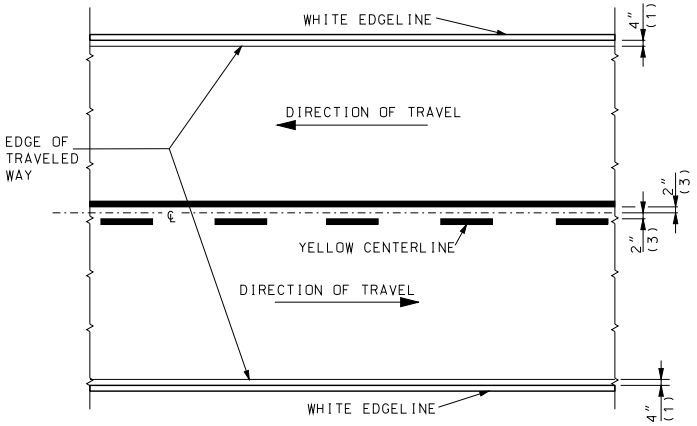


TWO-LANE TWO-WAY

## TYPICAL STRIPING OFFSETS FOR RUMBLE STRIPES

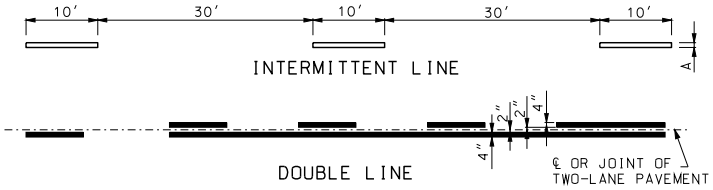


DOUBLE LINE

## LINE DETAIL

LEGEND
WHITE LINE
YELLOW LINE

(1) OFFSET FROM EDGE OF TRAVELED WAY (TYP.)
(2) OFFSET FROM JOINT (TYP.)
(3) OFFSET FROM CENTERLINE (TYP.)

IF A SEAL IS PRESENT ON THIS SHEET IT HAS BEEN ELECTRONICALLY SEALED AND DATED.

MISSOURI HIGHWAYS AND TRANSPORTATION COMMISSION
105 WEST CAPITOL
JEFFERSON CITY, MO 65102
1-888-ASK-MODOT (1-888-275-6636)

STATE OF MISSOURI
KATHRYN PHILLIPS HARVEY
NUMBER PE-23751
PROFESSIONAL ENGINEER
THIS SHEET HAS BEEN SIGNED, SEALED AND DATED ELECTRONICALLY.

# PAVEMENT MARKING

DATE EFFECTIVE: 12/01/2009
DATE PREPARED: 12/8/2010

620.00J

SHEET NO. 2 OF 5

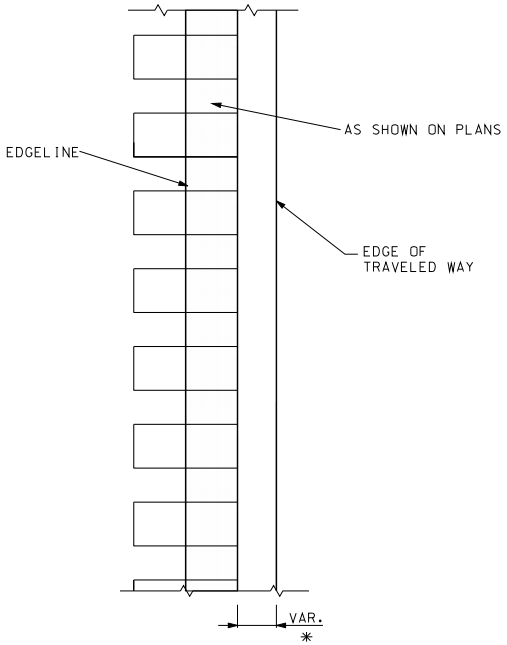


FOR SHOULDERS

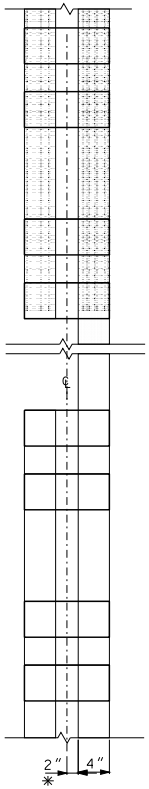


2 WAY 2 LANE

(SEE TYPICAL STRIPING
FOR RUMBLESTRIPS)

* = LATERAL DEVIATION SHALL NOT EXCEED ONE INCH IN 100 FEET.

MISSOURI HIGHWAYS AND TRANSPORTATION COMMISSION
105 WEST CAPITOL
JEFFERSON CITY, MO 65102
1-888-ASK-MODOT (1-888-275-6636)

STATE OF MISSOURI
KATHRYN PHILLIPS HARVEY
NUMBER PE-23751
PROFESSIONAL ENGINEER
THIS SHEET HAS BEEN SIGNED, SEALED AND DATED ELECTRONICALLY.

# PAVEMENT MARKING
STRIPING THROUGH
RUMBLE STRIPS

DATE EFFECTIVE: 12/01/2009
DATE PREPARED: 12/8/2010

620.00J

SHEET NO.
3 OF 5

IF A SEAL IS PRESENT ON THIS SHEET IT HAS BEEN ELECTRONICALLY SEALED AND DATED.

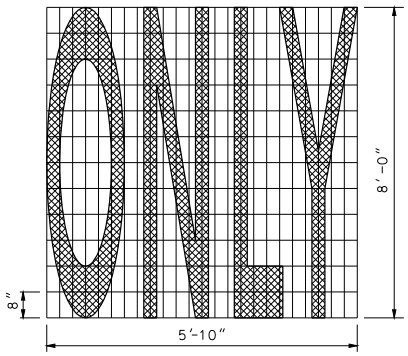


WORD MARKING
**ELONGATED WORD & SYMBOL**

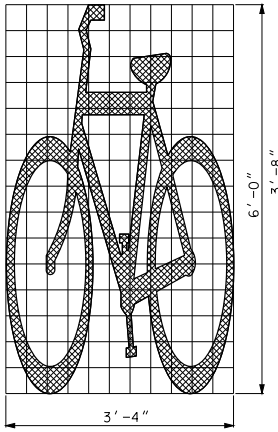


BICYCLE SYMBOL

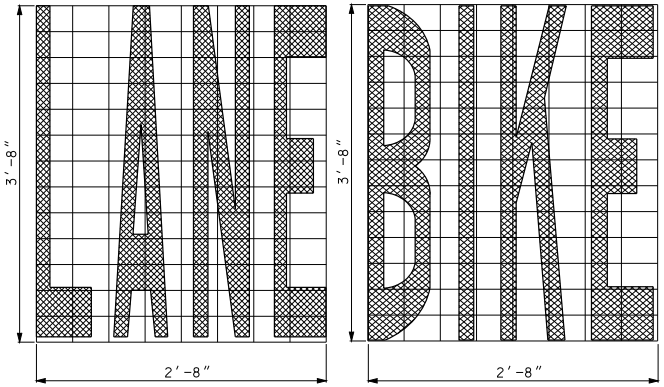


WORD MARKING
**ELONGATED WORD & SYMBOL**

TWO LANE USE CONTROL ARROWS FOR FIRST 200 FEET WITH ONE ADDITIONAL ARROW EVERY 400 FEET OF MANDATORY MOVEMENT LANE. FIRST ARROW 75 FEET FROM STOP LINE.

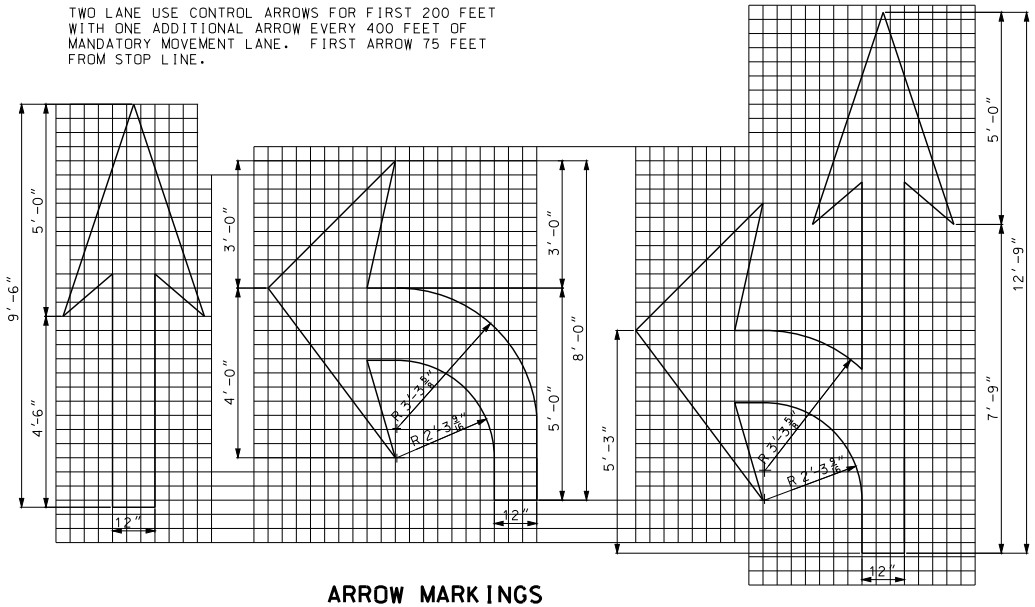


**ARROW MARKINGS**

L = S x W WHEN POSTED SPEED 45 MPH OR GREATER OR $WS^2$ /60 WHEN POSTED SPEED IS 40 MPH OR LESS.

L = LENGTH OF TAPER IN FEET.

S = OFF PEAK 85 PERCENTILE SPEED IN MPH.

W = OFFSET DISTANCE IN FEET.

DISTANCE (L) SHALL BE EXTENDED AS REQUIRED BY SIGHT DISTANCE CONDITIONS.

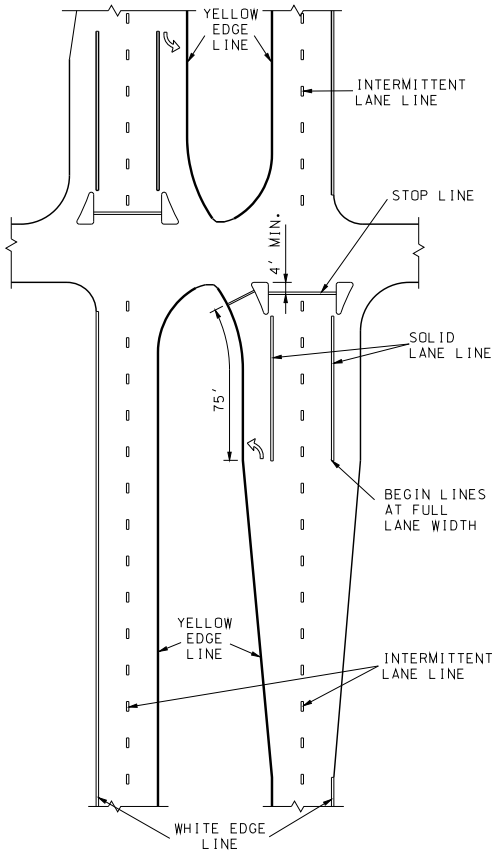


SIGNALIZED GRADE
**INTERSECTION MARKING**

IF A SEAL IS PRESENT ON THIS SHEET IT HAS BEEN ELECTRONICALLY SEALED AND DATED.

MISSOURI HIGHWAYS AND TRANSPORTATION COMMISSION
105 WEST CAPITOL
JEFFERSON CITY, MO 65102
1-888-ASK-MODOT (1-888-275-6636)

STATE OF MISSOURI
KATHRYN PHILLIPS HARVEY
NUMBER PE-23751
PROFESSIONAL ENGINEER
THIS SHEET HAS BEEN SIGNED, SEALED AND DATED ELECTRONICALLY.

# PAVEMENT MARKING

DATE EFFECTIVE: 12/01/2009
DATE PREPARED: 10/18/2011

620.00J

SHEET NO. 4 OF 5

1. STOP LINES SHALL BE PLACED 90° TO THE ROADWAY.
2. IF RAILROAD GATE IS PRESENT THE STOP LINE SHALL BE 8' FROM GATE.

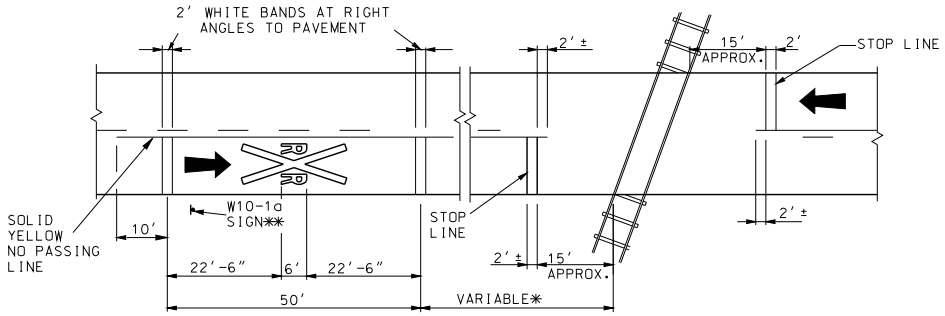


PAVEMENT DETAIL

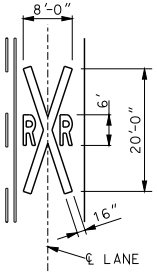


SYMBOL DETAIL

* THE DISTANCE FROM THE RAILROAD CROSSING MARKING TO THE NEAREST TRACK WILL VARY ACCORDING TO THE APPROACH SPEED AND THE SIGHT DISTANCE OF THE VEHICULAR TRAFFIC APPROACHING, BUT SHALL BE NO LESS THAN 50 FEET.
A THREE-LANE ROADWAY SHALL BE MARKED WITH A CENTERLINE FOR TWO-LANE APPROACH OPERATION ON THE APPROACH TO A CROSSING. ON MULTI-LANE ROADWAYS THE TRANSVERSE BANDS SHALL EXTEND ACROSS ALL APPROACH LANES. AND INDIVIDUAL "R X R" SYMBLOLS SHALL BE USED IN EACH APPROACH LANE.

** PLACEMENT OF W10-1a SIGN BY OTHERS.

## RAILROAD GRADE CROSSING

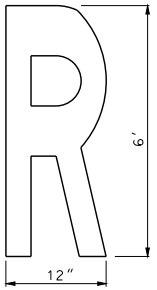


LETTER DETAIL

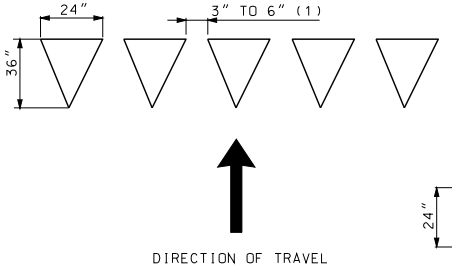


24 INCH YIELD LINE TRIANGLES

(1) TRIANGLES SHALL BE UNIFORMLY SPACED AND COVER THE COMPLETE WIDTH OF THE TRAVEL LANE. SPACING SHALL BE ADJUSTED SO THERE ARE NO PARTIAL TRIANGLES WITHIN THE YIELD MARKING.

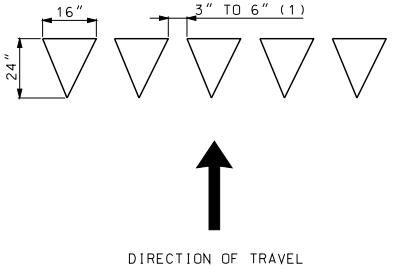


16 INCH YIELD LINE TRIANGLES

## YIELD LINE TRIANGLES

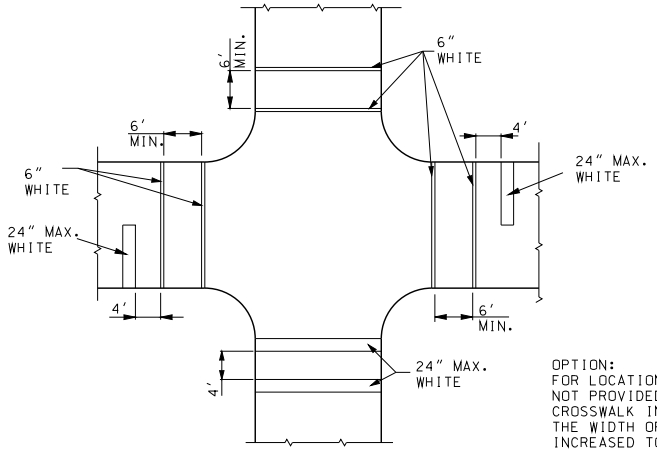


SOLID WHITE
## PEDESTRIAN CROSSWALK

OPTION:
FOR LOCATIONS WHERE STOP BARS ARE NOT PROVIDED SPEEDS EXCEED 35 MPH OR CROSSWALK IN AN UNEXPECTED LOCATION. THE WIDTH OF THE CROSSWALK MAY BE INCREASED TO 24 INCHES.

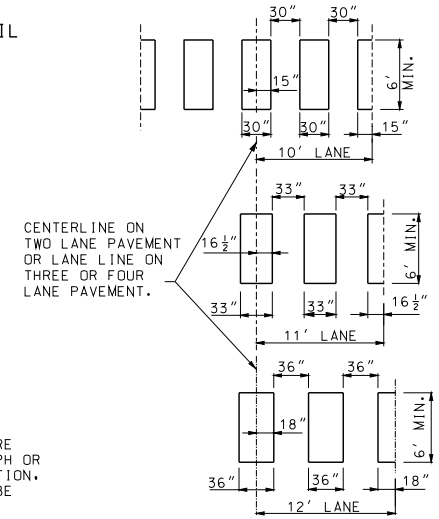


## WHITE MIDBLOCK (ZEBRA)

MISSOURI HIGHWAYS AND TRANSPORTATION COMMISSION
105 WEST CAPITOL
JEFFERSON CITY, MO 65102
1-888-ASK-MODOT (1-888-275-6636)

STATE OF MISSOURI
KATHRYN PHILLIPS HARVEY
NUMBER PE-23751
PROFESSIONAL ENGINEER
THIS SHEET HAS BEEN SIGNED, SEALED AND DATED ELECTRONICALLY.

# PAVEMENT MARKING

DATE EFFECTIVE: 12/01/2009
DATE PREPARED: 12/8/2010

620.00J

SHEET NO. 5 OF 5

IF A SEAL IS PRESENT ON THIS SHEET IT HAS BEEN ELECTRONICALLY SEALED AND DATED.

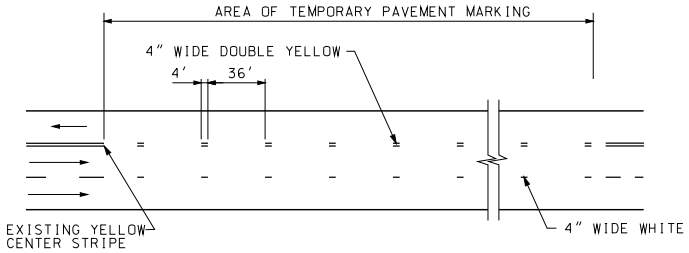


## 2-LANE SECTION WITH AUXILARY LANE

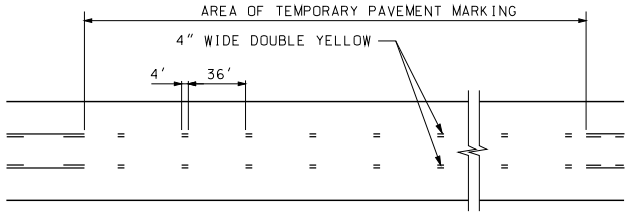


## 3-LANE SECTION

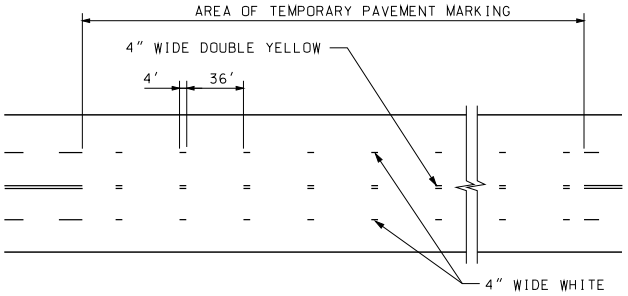


## 4-LANE SECTION

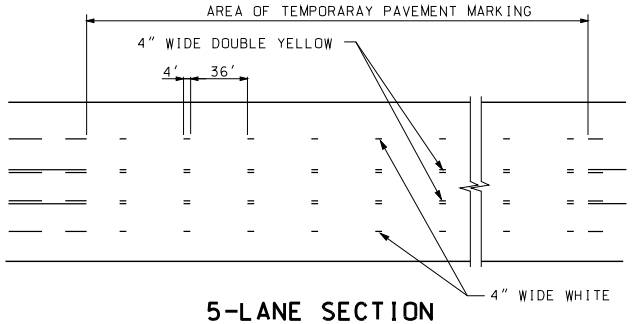


## 5-LANE SECTION

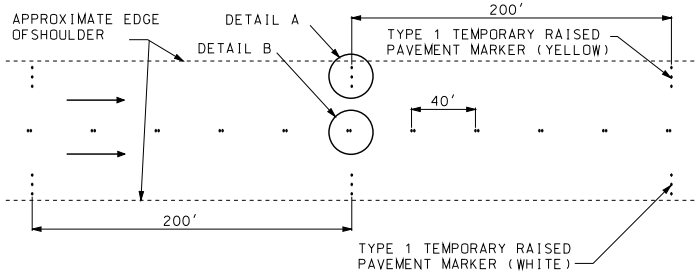


## EDGE LINES ON MULTILANE DIVIDED SECTIONS

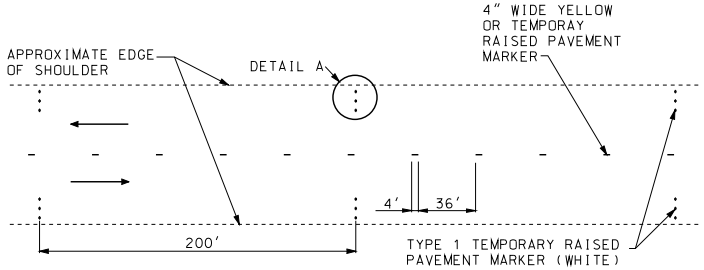


## EDGE LINES ON TWO-WAY SECTIONS WITH PAVED SHOULDERS GREATER THAN 4 FEET WIDE

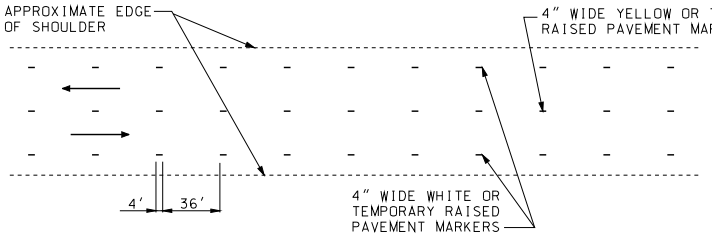


## EDGE LINES ON TWO-WAY SECTIONS WITH AGGREGATE OR PAVED SHOULDERS 4 FEET OR LESS

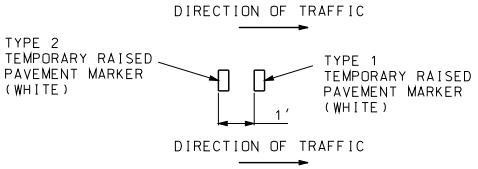


DETAIL B

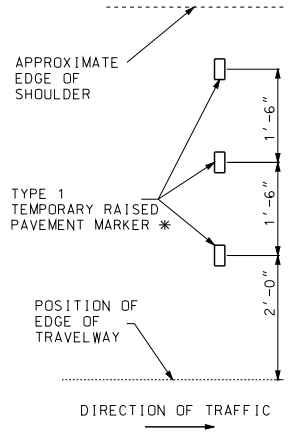


DETAIL A

✳ THREE TYPE 1 TEMPORARY RAISED PAVEMENT MARKERS SHALL BE USED IF SHOULDER IS 6' OR WIDER. OTHERWISE, USE TWO TYPE 1 TEMPORARY RAISED PAVEMENT MARKERS.

GENERAL NOTES:

INTERMEDIATE LIFTS FOR ALL PROJECTS, TEMPORARY PAVEMENT MARKINGS SHOULD EITHER BE SHORT TERM MARKING TAPE, TEMPORARY RAISED PAVEMENT MARKERS (TRPM) OR PAINT. IF USED, TRPM SHALL BE REMOVED BEFORE THE NEXT LIFT IS INSTALLED.

FOR TWO-LANE TWO-WAY ROADWAYS, TEMPORARY RAISED PAVEMENT MARKERS, IF USED, SHALL BE INSTALLED IN ACCORDANCE WITH SECTION 620 OF THE MISSOURI STANDARD SPECIFICATIONS FOR HIGHWAY CONSTRUCTION.

IF A SEAL IS PRESENT ON THIS SHEET IT HAS BEEN ELECTRONICALLY SEALED AND DATED.

MISSOURI HIGHWAYS AND TRANSPORTATION COMMISSION
105 WEST CAPITOL
JEFFERSON CITY, MO 65102
1-888-ASK-MODOT (1-888-275-6636)

STATE OF MISSOURI
KATHRYN PHILLIPS HARVEY
NUMBER PE-23751
PROFESSIONAL ENGINEER
THIS SHEET HAS BEEN SIGNED, SEALED AND DATED ELECTRONICALLY.

# TEMPORARY PAVEMENT MARKING

TEMPORARY PAVEMENT MARKING

DATE EFFECTIVE: 07/01/2011
DATE PREPARED: 10/18/2011

620.10C

SHEET NO. 1 OF 4

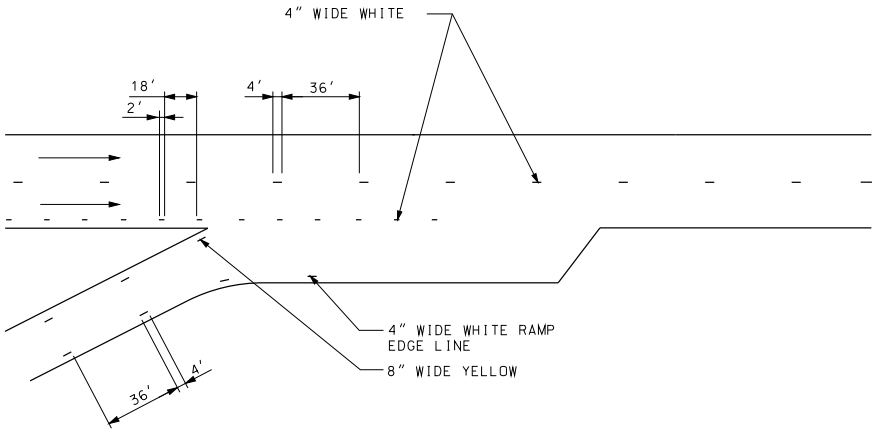


ENTRANCE RAMP

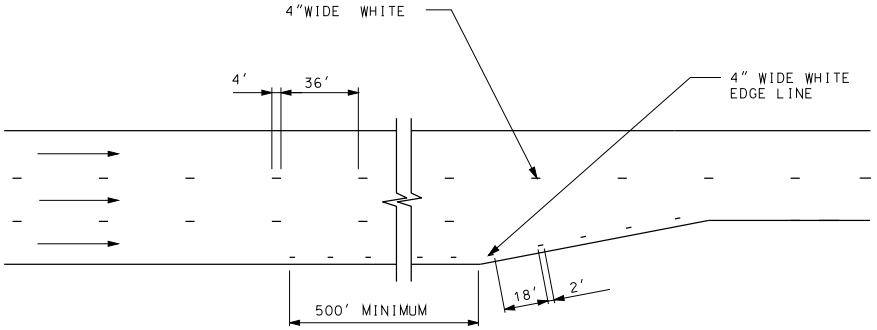


LANE TRANSITION

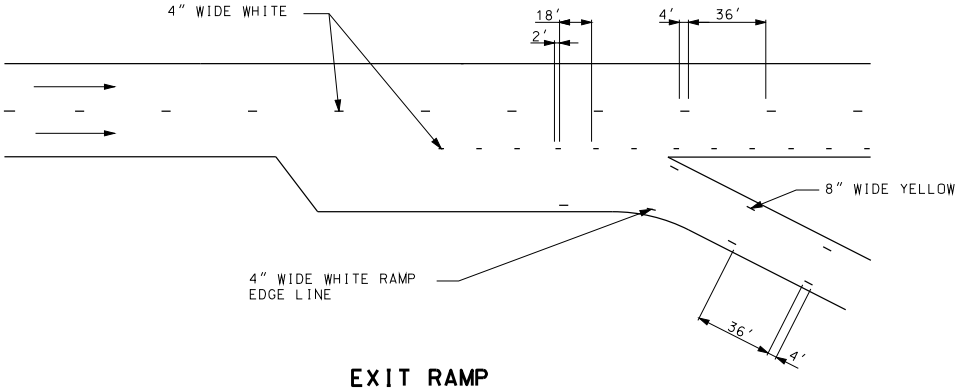


EXIT RAMP

GENERAL NOTES:

TEMPORARY PAVEMENT MARKING IN INTERSECTIONS, RAMPS GORES AND OTHER TRANSITION AREAS USE AN INTERMITTENT MARKING OF 2 FEET LONG AT A CYCLE OF 20 FEET.

LIMITS OF TEPORARY GORE MARKING ARE THE SAME AS THE EXISTING GORE LINES.

MISSOURI HIGHWAYS AND TRANSPORTATION COMMISSION
105 WEST CAPITOL
JEFFERSON CITY, MO 65102
1-888-ASK-MODOT (1-888-275-6636)

STATE OF MISSOURI
KATHRYN PHILLIPS HARVEY
NUMBER PE-23751
PROFESSIONAL ENGINEER
THIS SHEET HAS BEEN SIGNED, SEALED AND DATED ELECTRONICALLY.

# TEMPORARY PAVEMENT MARKING

## LANE TRANSITION AND RAMP AREAS

DATE EFFECTIVE: 07/01/2011
DATE PREPARED: 6/20/2011

620.10C



IF A SEAL IS PRESENT ON THIS SHEET IT HAS BEEN ELECTRONICALLY SEALED AND DATED.

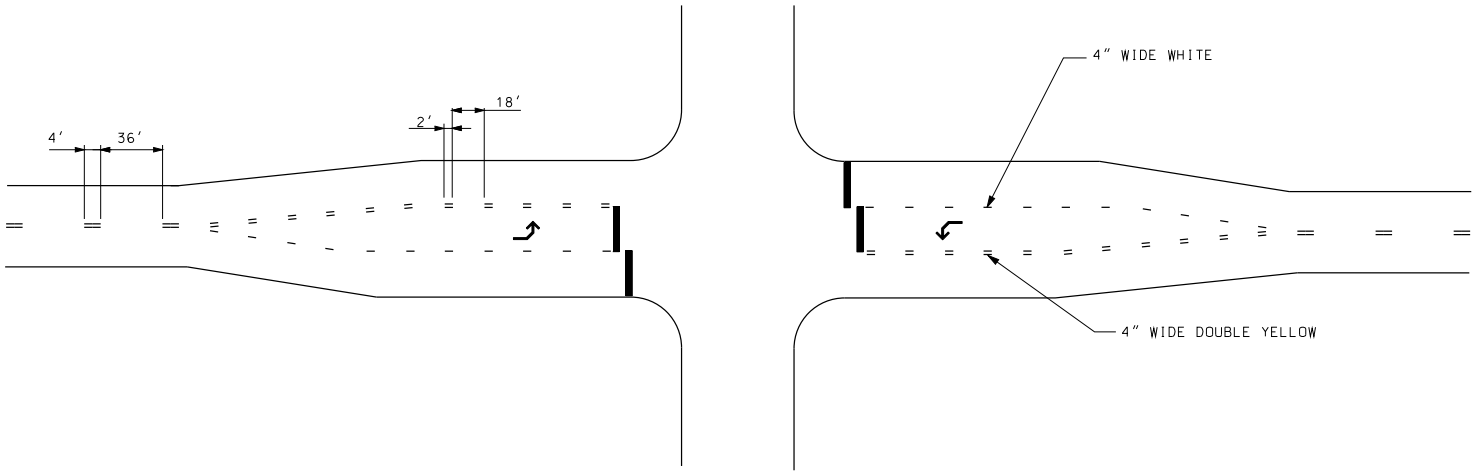


PLAN VIEW

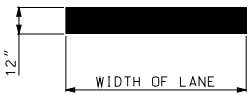


TEMPORARY STOP BAR DETAIL (WHITE)

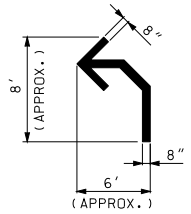


TEMPORARY ARROW DETAIL (WHITE)

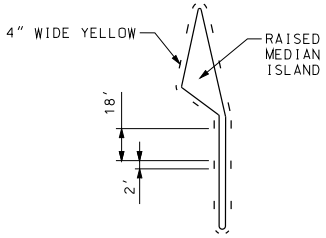


RAISED DIVISIONAL ISLAND

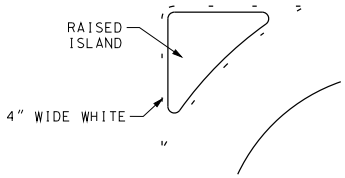


RAISED CHANNELIZING ISLAND

GENERAL NOTES:

TEMPORARY ARROWS AND STOP BARS ARE REQUIRED WHEN GOEMETRIC MODIFICATIONS DURING CONSTRUCTION CREATE LANE CONFIGURATIONS DIFFERENT THAN EXISTING, OR THE EXISTING PAVEMENT MARKING INCLUDES THEM.

YELLOW AND WHITE TEMPORARY MARKING AROUND ISLANDS ONLY REQUIRED WHEN THE ISLAND CURB IS NOT PAINTED.

TEMPORARY PAVEMENT MARKING IN INTERSECTIONS, RAMP GORES AND OTHER TRANSITION AREAS USE AN INTERMITTENT MARKING 2' LONG AT A CYCLE OF 20'.

MISSOURI HIGHWAYS AND TRANSPORTATION COMMISSION
105 WEST CAPITOL
JEFFERSON CITY, MO 65102
1-888-ASK-MODOT (1-888-275-6636)

STATE OF MISSOURI
KATHRYN PHILLIPS HARVEY
NUMBER PE-23751
PROFESSIONAL ENGINEER
THIS SHEET HAS BEEN SIGNED, SEALED AND DATED ELECTRONICALLY.

# TEMPORARY PAVEMENT MARKING

INTERSECTIONS

DATE EFFECTIVE: 07/01/2011
DATE PREPARED: 6/20/2011

620.10C

SHEET NO. 3 OF 4

IF A SEAL IS PRESENT ON THIS SHEET IT HAS BEEN ELECTRONICALLY SEALED AND DATED.

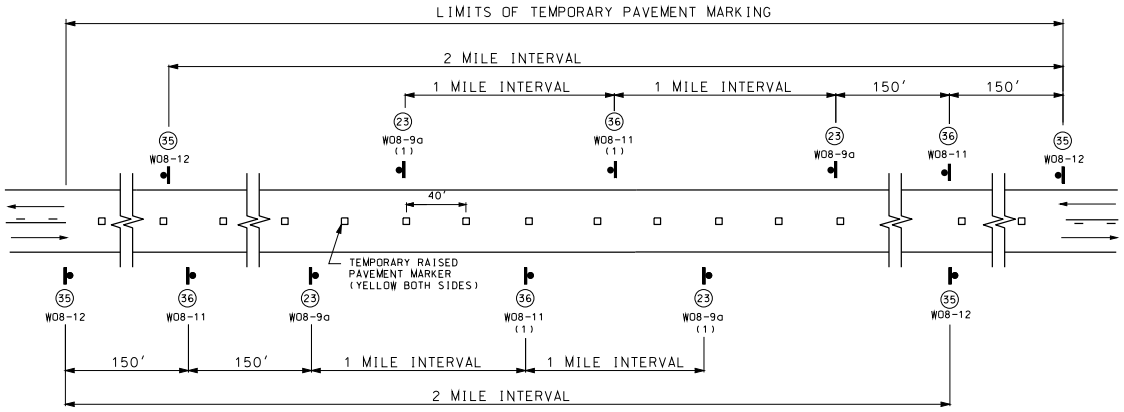


## SIGN SPACING FOR MAINLINE

(DETAIL SHOWN IS BASED ON A PROJECT MEETING ALL CONDITIONS: NO CENTER STRIPE, UNEVEN LANES, SHOULDER DROP OFF AND BUMP.)

(1) IF ONLY ONE CONDITION EXISTS (UNEVEN LANES OR SHOULDER DROP OFF), THE SIGN SPACING SHALL BE AT 1 MILE INTERVALS.

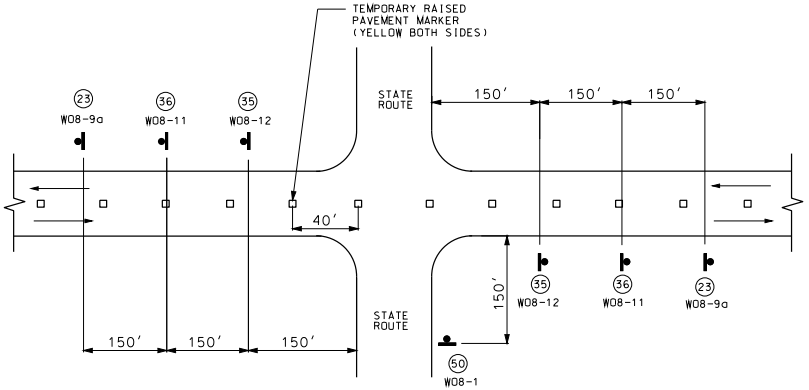


## SIGN SPACING AT STATE ROUTE INTERSECTIONS

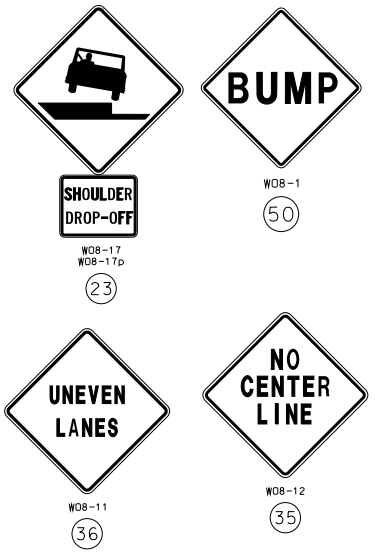


GENERAL NOTES:

SIGN (35) AND TEMPORARY PAVEMENT MARKING INSTALLED WHERE CENTERLINE STRIPING HAS BEEN COVERED OR REMOVED. SIGNS ARE TO REMAIN IN PLACE UNTIL THE PERMANENT CENTERLINE PAVEMENT MARKINGS ARE IN PLACE. SIGNS SHALL BE COVERED OR REMOVED WHEN PAVEMENT CENTERLINE MARKING HAS BEEN INSTALLED.

SIGN (35) IS PLACED AT APPROXIMATELY TWO-MILE INTERVALS AND AT STATE ROUTE JUNCTIONS. WHEN THE INSTALLATION AT A JUNCTION IS WITHIN ONE-EIGHTH MILE OF THE NORMAL MAINLINE SIGN (35), THE LATTER MAY BE ELIMINATED.

ALL SIGNS SHALL BE POST MOUNTED AND IN ACCORDANCE WITH STANDARD PLAN 616.10 AND 903.03.

WHEN SHOULDER DROP-OFF SIGNS ARE IN PLACE FOR GREATER THAN THREE DAYS, THE SHOULDER DROP-OFF PLAQUE SHOULD BE USED IN ADDITION WITH THE SHOULDER DROP-OFF SIGN.

MISSOURI HIGHWAYS AND TRANSPORTATION COMMISSION
105 WEST CAPITOL
JEFFERSON CITY, MO 65102
1-888-ASK-MODOT (1-888-275-6636)

STATE OF MISSOURI
KATHRYN PHILLIPS HARVEY
NUMBER PE-23751
PROFESSIONAL ENGINEER
THIS SHEET HAS BEEN SIGNED, SEALED AND DATED ELECTRONICALLY.

# TEMPORARY PAVEMENT MARKING

TWO-LANE TWO-WAY HIGHWAY

| DATE EFFECTIVE: | 07/01/2011 | 620.10C | SHEET NO. |
|---|---|---|---|
| DATE PREPARED: | 3/28/2012 | | 4 OF 4 |

IF A SEAL IS PRESENT ON THIS SHEET IT HAS BEEN ELECTRONICALLY SEALED AND DATED.

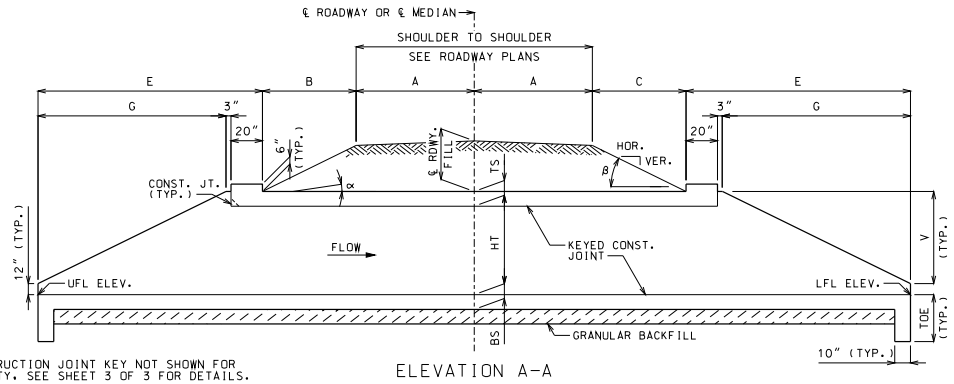


ELEVATION A-A

CONSTRUCTION JOINT KEY NOT SHOWN FOR CLARITY. SEE SHEET 3 OF 3 FOR DETAILS.

IF UNSUITABLE MATERIAL IS ENCOUNTERED, EXCAVATION OF UNSUITABLE MATERIAL AND FURNISHING AND PLACING OF GRANULAR BACKFILL SHALL BE IN ACCORDANCE WITH SECTION 206 OF THE STANDARD SPECIFICATIONS FOR HIGHWAY CONSTRUCTION.

## EQUATIONS FOR COMPUTING $\alpha$, $\beta$, B AND C

$\alpha$ = ANGLE OF BARREL SLOPE WITH HORIZONTAL NORMAL TO ℄ ROADWAY OR ℄ MEDIAN = $\arctan\left(\frac{\text{UFL ELEV.} - \text{LFL ELEV.}}{W}\right)$

$\beta$ = ANGLE OF FILL SLOPE WITH HORIZONTAL NORMAL TO ℄ ROADWAY OR ℄ MEDIAN = $\arctan\left(\frac{\text{VER.}}{\text{HOR.}}\right)$

B = HORIZONTAL DISTANCE FROM UPSTREAM EDGE OF SHOULDER TO UPSTREAM HEADWALL NORMAL TO ℄ ROADWAY OR ℄ MEDIAN = $\frac{\text{℄ RDWY. FILL} + A(CS) - A(TAN\alpha)}{TAN\beta + TAN\alpha}$

C = HORIZONTAL DISTANCE FROM DOWNSTREAM EDGE OF SHOULDER TO DOWNSTREAM HEADWALL NORMAL TO ℄ ROADWAY OR ℄ MEDIAN = $\frac{\text{℄ RDWY. FILL} + A(CS) + A(TAN\alpha)}{TAN\beta - TAN\alpha}$

CS = CROSS SLOPE OF EACH PART OF ROADWAY INCLUDING CROWN, LANES AND SHOULDERS. CS IS POSITIVE IF RISING AND NEGATIVE IF FALLING AWAY FROM ℄ ROADWAY OR ℄ MEDIAN.

THE TERM "A(CS)" IS THE DIFFERENCE IN ELEVATION BETWEEN ℄ ROADWAY OR ℄ MEDIAN AND THE TOP OF THE FILL SLOPE NORMAL TO ℄ ROADWAY OR ℄ MEDIAN. THIS TERM SHALL BE ADJUSTED FOR UNSYMMETRICAL AND NONSTANDARD ROADWAYS.

TO ACCOUNT FOR A VARYING PROFILE GRADE THE ℄ ROADWAY FILL SHALL BE BASED ON STATIONS THAT CORRESPOND TO THE CORNERS OF THE INSIDE FACE OF THE HEADWALLS THAT PRODUCE MAXIMUM VALUES FOR B AND C.

SEE ROADWAY PLANS FOR FILL SLOPES, CROSS SLOPES, ℄ ROADWAY FILL, UPPER FLOW LINE (UFL) ELEVATION AND LOWER FLOW LINE (LFL) ELEVATION.

## LAYOUT DIMENSIONS

| VARIABLE | DIMENSION |
|---|---|
| $\alpha$ | SEE EQUATIONS |
| $\beta$ | SEE EQUATIONS |
| B | SEE EQUATIONS |
| C | SEE EQUATIONS |
| E | G + 23" |
| F | S + 2TX |
| G | 2V |
| V | HT + TS - 12" |
| W | 2A + B + C + 2E |
| TOE | MAX{(BS + 12"), 40"} |

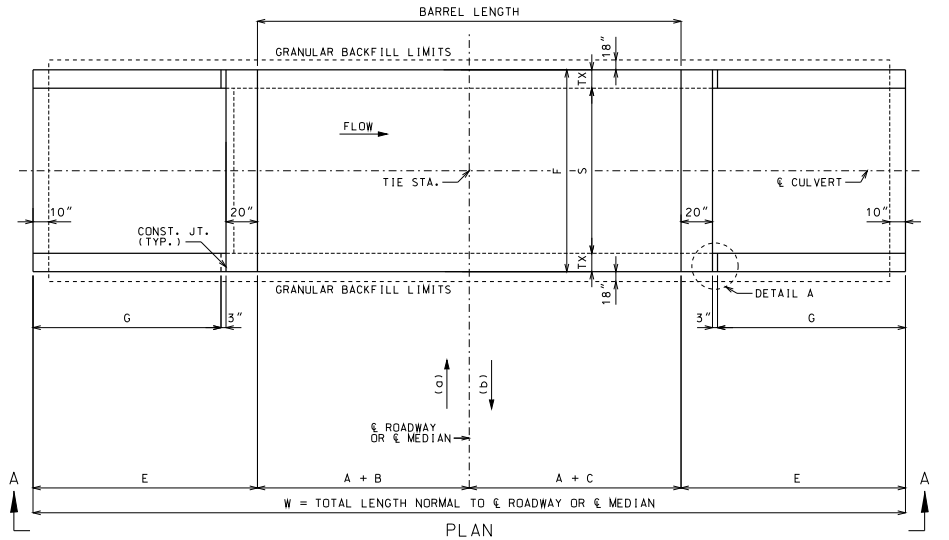


PLAN

(a) AHEAD STATION WHERE STREAM FLOWS LEFT TO RIGHT. (b) AHEAD STATION WHERE STREAM FLOWS RIGHT TO LEFT.

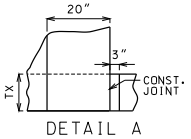


DETAIL A

## GENERAL NOTES:

DESIGN SPECIFICATIONS: 2010 AASHTO LRFD BRIDGE DESIGN SPECFICATIONS AND 2010 INTERIM REVISIONS

DESIGN UNIT STRESSES: CLASS B-1 CONCRETE f'c = 4,000 PSI
REINFORCING STEEL (GRADE 60) fy = 60,000 PSI

DESIGN LOADS: VEHICULAR = HL-93 MINUS LANE LOAD
EARTH = 120 LB/FT³
EQUIVALENT FLUID PRESSURE = 30 LB/FT³ (MIN.) - 60 LB/FT³ (MAX.)

FOR REINFORCEMENT DETAILS, SEE SHEET 2 OF 3. FOR SECTION DETAILS, SEE SHEET 3 OF 3. FOR MEMBER THICKNESS, SEE 703.17.

DRAWING NOT TO SCALE. FOLLOW DIMENSIONS.

DIMENSIONS ARE IN INCHES UNLESS OTHERWISE NOTED.

WHEN ALTERNATE PRECAST CONCRETE BOX CULVERT SECTIONS ARE USED, THE MINIMUM DISTANCE FROM INSIDE FACE OF HEADWALLS TO PRECAST SECTIONS MEASURED ALONG THE SHORTEST WALL SHALL BE 3 FEET. REINFORCEMENT AND DIMENSIONS FOR WINGS AND HEADWALLS SHALL BE IN ACCORDANCE WITH MISSOURI STANDARD PLANS.

MISSOURI HIGHWAYS AND TRANSPORTATION COMMISSION
105 WEST CAPITOL
JEFFERSON CITY, MO 65102
1-888-ASK-MODOT (1-888-275-6636)

STATE OF MISSOURI
DENNIS W. HECKMAN
NUMBER PE-27141
PROFESSIONAL ENGINEER
THIS SHEET HAS BEEN SIGNED, SEALED AND DATED ELECTRONICALLY.

# CONCRETE SINGLE BOX CULVERT

SKEW: SQUARE
WINGS: STRAIGHT

LAYOUT

DATE EFFECTIVE: 04/01/2011
DATE PREPARED: 9/8/2011

703.10H

SHEET NO. 1 OF 3

IF A SEAL IS PRESENT ON THIS SHEET IT HAS BEEN ELECTRONICALLY SEALED AND DATED.

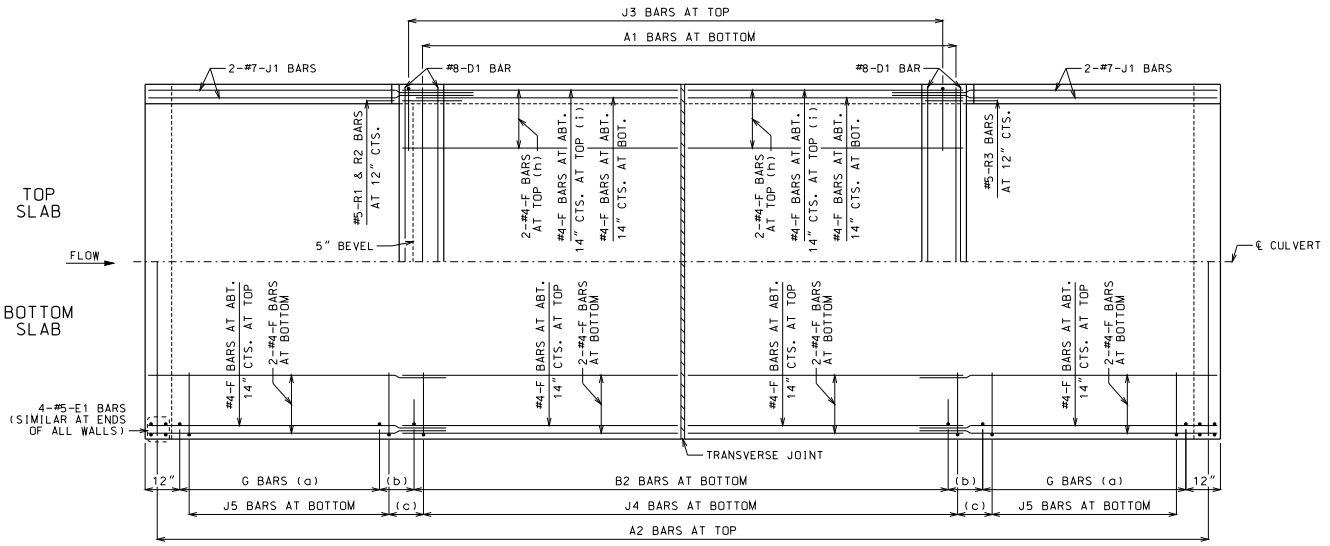


## HALF PLANS

HALF PLANS ARE SYMMETRICAL ABOUT ℄ CULVERT.

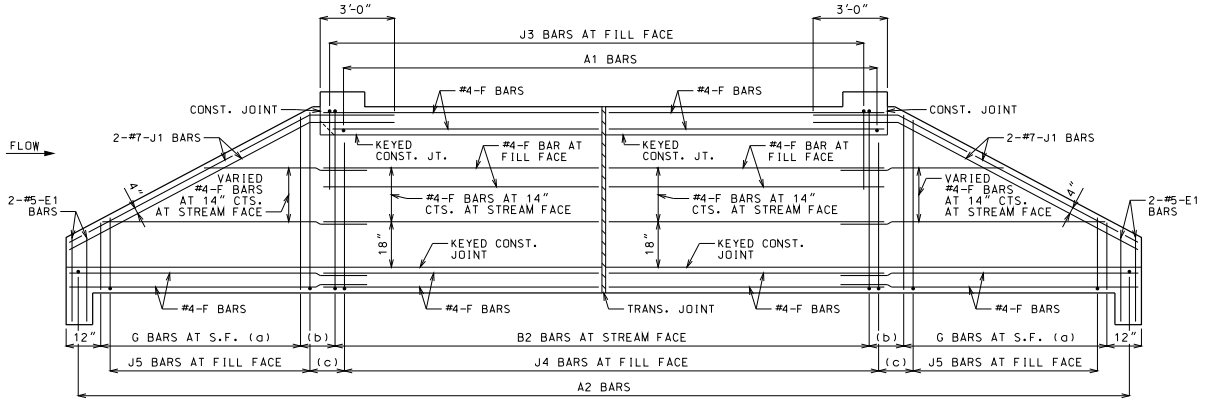


## ELEVATION

J1 BARS MAY BE BENT IN FIELD OR SHOP.

## LAYING OUT TRANVERSE JOINTS

UNLESS SHOWN ON ROADWAY OR BRIDGE PLANS

USE A TRANSVERSE JOINT WHEN BARREL LENGTH IS OVER 80 FEET. USE ADDITIONAL JOINTS TO LIMIT CUT SECTION LENGTH AND END SECTION BARREL LENGTH MEASURED ALONG CENTERLINE OF CULVERT TO 50 FEET.

MINIMUM END SECTION LENGTH SHALL BE 3 FEET MEASURED ALONG THE SHORTEST WALL FROM THE INSIDE FACE OF HEADWALL TO THE TRANSVERSE JOINT.

TO AVOID LOCATING TRANSVERSE JOINTS UNDER A TRAVELED WAY WITH DESIGN FILLS 2 FEET OR LESS THE FOLLOWING SHALL APPLY:

BARREL LENGTH UP TO 90 FEET WITHOUT A TRANSVERSE JOINT

CUT SECTION LENGTHS UP TO 60 FEET

WHEN BARREL AND CUT SECTION LENGTH RESTRICTIONS REQUIRE TRANSVERSE JOINTS TO BE LOCATED UNDER A TRAVELED WAY WITH DESIGN FILLS 2 FEET OR LESS, THE JOINTS SHALL BE LOCATED TO MINIMIZE THE LENGTH OF JOINT UNDER THE TRAVELED WAY.

TRAVELED WAY IS THE ROADWAY WIDTH MINUS SHOULDER WIDTHS.

FOR CUT SECTION DETAILS, SEE 703.16.

## GENERAL NOTES:

FOR SECTIONS THRU BARREL, WINGS AND HEADWALLS, SEE SHEET 3 OF 3. FOR BAR SIZES, SPACING AND DIMENSIONS OF ALL REINFORCEMENT EXCEPT J5 BARS, SEE 703.17. FOR J5 BARS, SEE 703.37.

CONSTRUCTION JOINT KEY NOT SHOWN FOR CLARITY IN HALF PLANS AND ELEVATION. SEE SHEET 3 OF 3 FOR DETAILS.

DRAWING NOT TO SCALE. FOLLOW DIMENSIONS.

MINIMUM CLEARANCE TO REINFORCING STEEL SHALL BE 1½".

LAP LONGITUDINAL BARS A MINIMUM OF 23" AT SPLICES.

BEVELED HEADWALL SHALL BE LOCATED AT UPSTREAM END.

(a) SAME SIZE AND SPACING AS B2 BARS

(b) VARIES, 12" MAXIMUM

(c) J4 BAR SPACING

(d) NOT SPECIFIED ON THIS SHEET

(e) NOT SPECIFIED ON THIS SHEET

(f) NOT SPECIFIED ON THIS SHEET

(g) NOT SPECIFIED ON THIS SHEET

(h) FOR DESIGN FILLS OVER 2'-0"

(i) FOR DESIGN FILLS 2'-0" OR LESS


MISSOURI HIGHWAYS AND TRANSPORTATION COMMISSION
105 WEST CAPITOL
JEFFERSON CITY, MO 65102
1-888-ASK-MODOT (1-888-275-6636)


STATE OF MISSOURI
DENNIS W. HECKMAN
NUMBER PE-27141
PROFESSIONAL ENGINEER
THIS SHEET HAS BEEN SIGNED, SEALED AND DATED ELECTRONICALLY.

# CONCRETE SINGLE BOX CULVERT

SKEW: SQUARE
WINGS: STRAIGHT

REINFORCEMENT

DATE EFFECTIVE: 04/01/2011
DATE PREPARED: 9/8/2011

703.10H

SHEET NO. 2 OF 3

IF A SEAL IS PRESENT ON THIS SHEET IT HAS BEEN ELECTRONICALLY SEALED AND DATED.

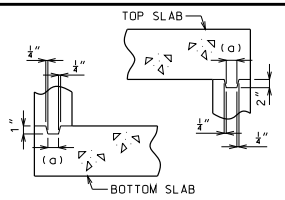


KEYED CONSTRUCTION JOINT

(a) APPROXIMATELY ONE-THIRD OF WALL THICKNESS

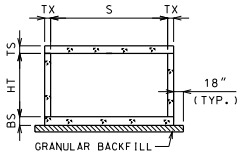


GRANULAR BACKFILL LIMITS AND MEMBER DIMENSIONS

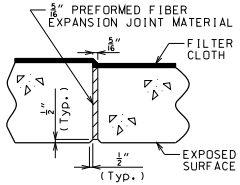


TRANSVERSE JOINT THRU BARREL

PREFORMED FIBER EXPANSION JOINT MATERIAL SHALL BE SECURELY STITCHED TO ONE FACE OF THE CONCRETE WITH NO. 10 GAGE COPPER WIRE OR NO. 12 GAGE SOFT DRAWN GALVANIZED STEEL WIRE.

FILTER CLOTH 3 FEET IN WIDTH AND DOUBLE THICKNESS SHALL BE CENTERED ON TRANSVERSE JOINTS IN TOP SLAB AND SIDEWALLS WITH EDGES SEALED WITH MASTIC OR TWO SIDED TAPE. FILTER CLOTH SHALL BE A SUBSURFACE DRAINAGE GEOTEXTILE IN ACCORDANCE WITH SECTION 1011 OF THE STANDARD SPECIFICATIONS FOR HIGHWAY CONSTRUCTION. COST OF FURNISHING AND INSTALLING FILTER CLOTH WILL BE CONSIDERED COMPLETELY COVERED BY THE CONTRACT UNIT PRICE FOR OTHER ITEMS.

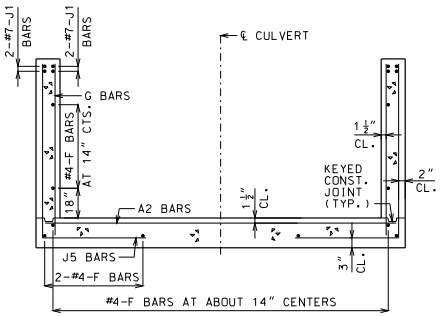


UPSTREAM AND DOWNSTREAM WINGS REINFORCEMENT

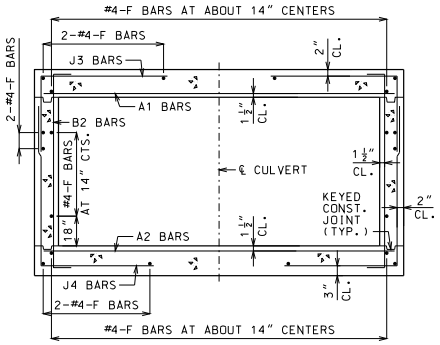


BARREL REINFORCEMENT

FOR DESIGN FILLS OVER 2'-0"

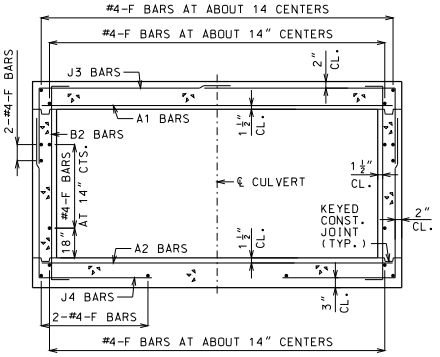


BARREL REINFORCEMENT

FOR DESIGN FILLS 2'-0" OR LESS

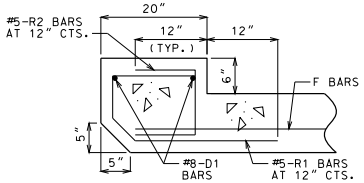


UPSTREAM HEADWALL REINFORCEMENT

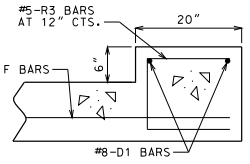


DOWNSTREAM HEADWALL REINFORCEMENT

GENERAL NOTES:

FOR MEMBER THICKNESS AND FOR BAR SIZES, SPACING AND DIMENSIONS OF ALL REINFORCEMENT EXCEPT J5 BARS, SEE 703.17. FOR J5 BARS, SEE 703.37.

BARREL AND WINGS SECTIONS ARE SYMMETRICAL ABOUT AND NORMAL TO ℄ CULVERT. HEADWALL SECTIONS ARE NORMAL TO LONG DIRECTION OF HEADWALL.

DRAWING NOT TO SCALE. FOLLOW DIMENSIONS.

MINIMUM CLEARANCE TO REINFORCING STEEL SHALL BE 1½".


MISSOURI HIGHWAYS AND TRANSPORTATION COMMISSION
105 WEST CAPITOL
JEFFERSON CITY, MO 65102
1-888-ASK-MODOT (1-888-275-6636)


STATE OF MISSOURI
DENNIS W. HECKMAN
NUMBER PE-27141
PROFESSIONAL ENGINEER
THIS SHEET HAS BEEN SIGNED, SEALED AND DATED ELECTRONICALLY.

# CONCRETE SINGLE BOX CULVERT

SKEW: SQUARE
WINGS: STRAIGHT

SECTIONS

DATE EFFECTIVE: 04/01/2011
DATE PREPARED: 9/8/2011

703.10H

SHEET NO. 3 OF 3

IF A SEAL IS PRESENT ON THIS SHEET IT HAS BEEN ELECTRONICALLY SEALED AND DATED.

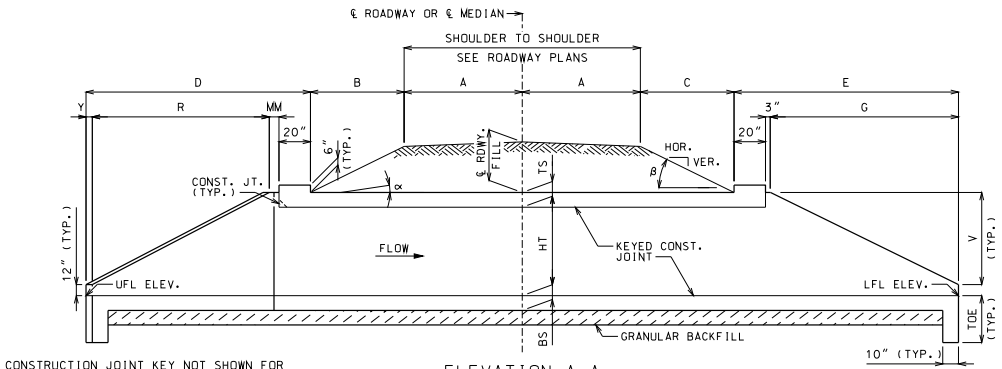


ELEVATION A-A

CONSTRUCTION JOINT KEY NOT SHOWN FOR CLARITY. SEE SHEET 3 OF 3 FOR DETAILS.

IF UNSUITABLE MATERIAL IS ENCOUNTERED, EXCAVATION OF UNSUITABLE MATERIAL AND FURNISHING AND PLACING OF GRANULAR BACKFILL SHALL BE IN ACCORDANCE WITH SECTION 206 OF THE STANDARD SPECIFICATIONS FOR HIGHWAY CONSTRUCTION.

## EQUATIONS FOR COMPUTING $\alpha$, $\beta$, B AND C

$\alpha$ = ANGLE OF BARREL SLOPE WITH HORIZONTAL NORMAL TO ℄ ROADWAY OR ℄ MEDIAN = $\arctan\left(\frac{\text{UFL ELEV.} - \text{LFL ELEV.}}{W}\right)$

$\beta$ = ANGLE OF FILL SLOPE WITH HORIZONTAL NORMAL TO ℄ ROADWAY OR ℄ MEDIAN = $\arctan\left(\frac{\text{VER.}}{\text{HOR.}}\right)$

B = HORIZONTAL DISTANCE FROM UPSTREAM EDGE OF SHOULDER TO UPSTREAM HEADWALL NORMAL TO ℄ ROADWAY OR ℄ MEDIAN = $\frac{\text{℄ RDWY. FILL} + A(CS) - A(TAN\alpha)}{TAN\beta + TAN\alpha}$

C = HORIZONTAL DISTANCE FROM DOWNSTREAM EDGE OF SHOULDER TO DOWNSTREAM HEADWALL NORMAL TO ℄ ROADWAY OR ℄ MEDIAN = $\frac{\text{℄ RDWY. FILL} + A(CS) + A(TAN\alpha)}{TAN\beta - TAN\alpha}$

CS = CROSS SLOPE OF EACH PART OF ROADWAY INCLUDING CROWN, LANES AND SHOULDERS. CS IS POSITIVE IF RISING AND NEGATIVE IF FALLING AWAY FROM ℄ ROADWAY OR ℄ MEDIAN.

THE TERM "A(CS)" IS THE DIFFERENCE IN ELEVATION BETWEEN ℄ ROADWAY OR ℄ MEDIAN AND THE TOP OF THE FILL SLOPE NORMAL TO ℄ ROADWAY OR ℄ MEDIAN. THIS TERM SHALL BE ADJUSTED FOR UNSYMMETRICAL AND NONSTANDARD ROADWAYS.

TO ACCOUNT FOR A VARYING PROFILE GRADE THE ℄ ROADWAY FILL SHALL BE BASED ON STATIONS THAT CORRESPOND TO THE CORNERS OF THE INSIDE FACE OF THE HEADWALLS THAT PRODUCE MAXIMUM VALUES FOR B AND C.

SEE ROADWAY PLANS FOR FILL SLOPES, CROSS SLOPES, ℄ ROADWAY FILL, UPPER FLOW LINE (UFL) ELEVATION AND LOWER FLOW LINE (LFL) ELEVATION.

## LAYOUT DIMENSIONS

| VARIABLE | DIMENSION | VARIABLE | DIMENSION |
|---|---|---|---|
| $\alpha$ | SEE EQUATIONS | P | 2V(SEC 20°) |
| $\beta$ | SEE EQUATIONS | Q | TX(COS 20°) |
| B | SEE EQUATIONS | R | P(COS 20°) |
| C | SEE EQUATIONS | U | (R + M)(TAN 20°) |
| D | Y + R + MM + 20" | V | HT + TS - 12" |
| E | G + 23" | W | 2A + B + C + D + E |
| F | S + 2TX | Y | TX(SIN 20°) |
| G | 2V | KK | S/2 + U |
| M | N(COS 20°) | MM | 3" + 3"(COS 20°) |
| N | 3" + TX(TAN 10°) | TOE | MAX{(BS + 12"), 40"} |

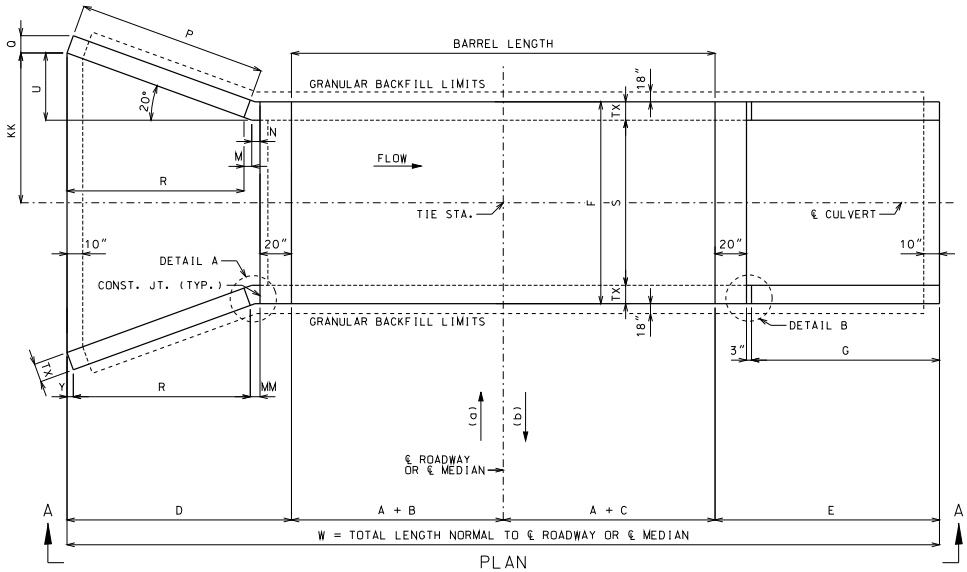


PLAN

(a) AHEAD STATION WHERE STREAM FLOWS LEFT TO RIGHT. (b) AHEAD STATION WHERE STREAM FLOWS RIGHT TO LEFT.

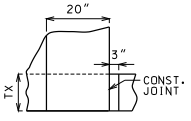


DETAIL B

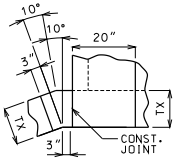


DETAIL A

## GENERAL NOTES:

DESIGN SPECIFICATIONS: 2010 AASHTO LRFD BRIDGE DESIGN SPECFICATIONS AND 2010 INTERIM REVISIONS

DESIGN UNIT STRESSES: CLASS B-1 CONCRETE f'c = 4,000 PSI
REINFORCING STEEL (GRADE 60) fy = 60,000 PSI

DESIGN LOADS: VEHICULAR = HL-93 MINUS LANE LOAD
EARTH = 120 LB/FT³
EQUIVALENT FLUID PRESSURE = 30 LB/FT³ (MIN.) - 60 LB/FT³ (MAX.)

FOR REINFORCEMENT DETAILS, SEE SHEET 2 OF 3. FOR SECTION DETAILS, SEE SHEET 3 OF 3. FOR MEMBER THICKNESS, SEE 703.17.

DRAWING NOT TO SCALE. FOLLOW DIMENSIONS.

DIMENSIONS ARE IN INCHES UNLESS OTHERWISE NOTED.

WHEN ALTERNATE PRECAST CONCRETE BOX CULVERT SECTIONS ARE USED, THE MINIMUM DISTANCE FROM INSIDE FACE OF HEADWALLS TO PRECAST SECTIONS MEASURED ALONG THE SHORTEST WALL SHALL BE 3 FEET. REINFORCEMENT AND DIMENSIONS FOR WINGS AND HEADWALLS SHALL BE IN ACCORDANCE WITH MISSOURI STANDARD PLANS.


MISSOURI HIGHWAYS AND TRANSPORTATION COMMISSION
105 WEST CAPITOL
JEFFERSON CITY, MO 65102
1-888-ASK-MODOT (1-888-275-6636)


STATE OF MISSOURI
DENNIS W. HECKMAN
NUMBER PE-27141
PROFESSIONAL ENGINEER
THIS SHEET HAS BEEN SIGNED, SEALED AND DATED ELECTRONICALLY.

# CONCRETE SINGLE BOX CULVERT

SKEW: SQUARE
WINGS: FLARED

LAYOUT

DATE EFFECTIVE: 04/01/2011
DATE PREPARED: 9/8/2011

703.11H

SHEET NO. 1 OF 3

IF A SEAL IS PRESENT ON THIS SHEET IT HAS BEEN ELECTRONICALLY SEALED AND DATED.

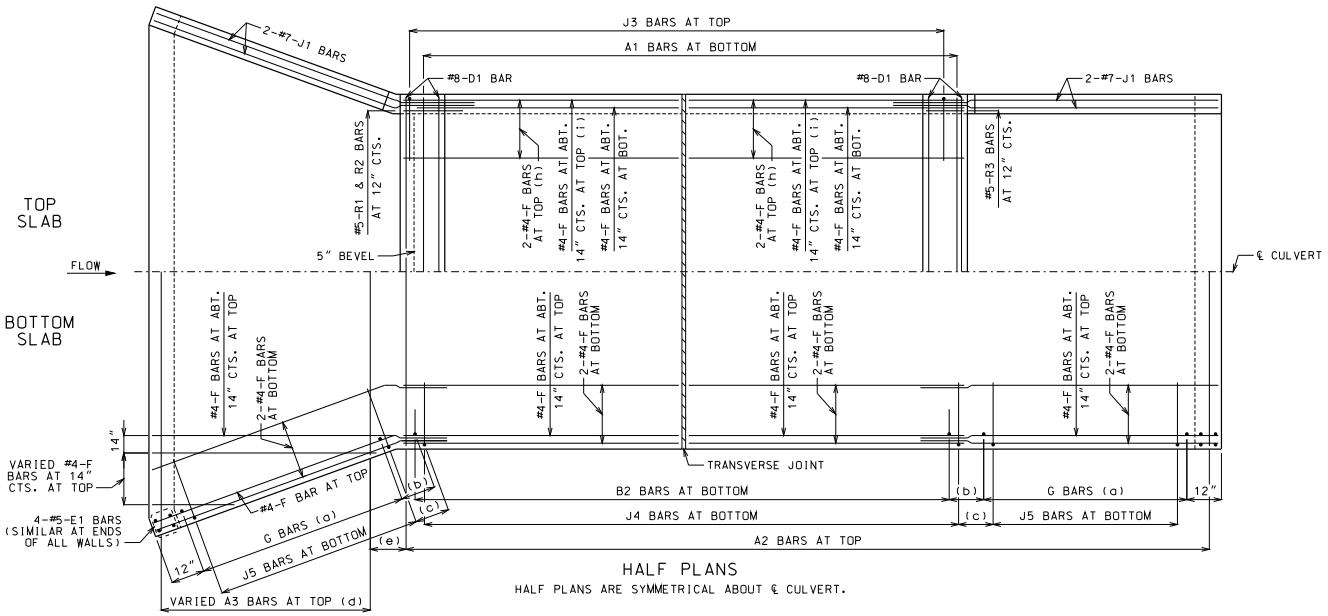


## HALF PLANS

HALF PLANS ARE SYMMETRICAL ABOUT ℄ CULVERT.

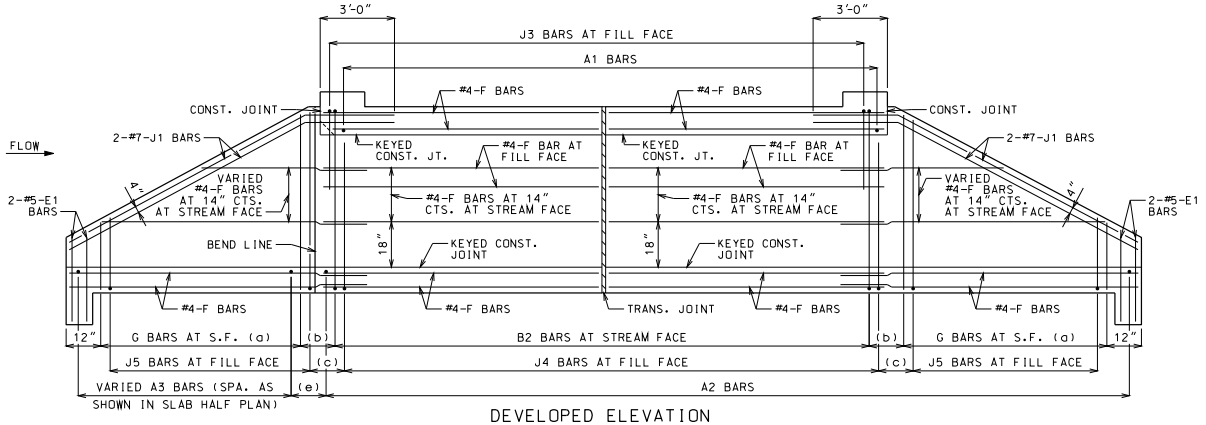


## DEVELOPED ELEVATION

J1 BARS MAY BE BENT IN FIELD OR SHOP.

## LAYING OUT TRANVERSE JOINTS

UNLESS SHOWN ON ROADWAY OR BRIDGE PLANS

USE A TRANSVERSE JOINT WHEN BARREL LENGTH IS OVER 80 FEET. USE ADDITIONAL JOINTS TO LIMIT CUT SECTION LENGTH AND END SECTION BARREL LENGTH MEASURED ALONG CENTERLINE OF CULVERT TO 50 FEET.

MINIMUM END SECTION LENGTH SHALL BE 3 FEET MEASURED ALONG THE SHORTEST WALL FROM THE INSIDE FACE OF HEADWALL TO THE TRANSVERSE JOINT.

TO AVOID LOCATING TRANSVERSE JOINTS UNDER A TRAVELED WAY WITH DESIGN FILLS 2 FEET OR LESS THE FOLLOWING SHALL APPLY:

BARREL LENGTH UP TO 90 FEET WITHOUT A TRANSVERSE JOINT

CUT SECTION LENGTHS UP TO 60 FEET

WHEN BARREL AND CUT SECTION LENGTH RESTRICTIONS REQUIRE TRANSVERSE JOINTS TO BE LOCATED UNDER A TRAVELED WAY WITH DESIGN FILLS 2 FEET OR LESS, THE JOINTS SHALL BE LOCATED TO MINIMIZE THE LENGTH OF JOINT UNDER THE TRAVELED WAY.

TRAVELED WAY IS THE ROADWAY WIDTH MINUS SHOULDER WIDTHS.

FOR CUT SECTION DETAILS, SEE 703.16.

## GENERAL NOTES:

FOR SECTIONS THRU BARREL, WINGS AND HEADWALLS, SEE SHEET 3 OF 3. FOR BAR SIZES, SPACING AND DIMENSIONS OF ALL REINFORCEMENT EXCEPT J5 BARS, SEE 703.17. FOR J5 BARS, SEE 703.37.

CONSTRUCTION JOINT KEY NOT SHOWN FOR CLARITY IN HALF PLANS AND ELEVATION. SEE SHEET 3 OF 3 FOR DETAILS.

DRAWING NOT TO SCALE. FOLLOW DIMENSIONS.

MINIMUM CLEARANCE TO REINFORCING STEEL SHALL BE 1½".

LAP LONGITUDINAL BARS A MINIMUM OF 23" AT SPLICES.

BEVELED HEADWALL SHALL BE LOCATED AT UPSTREAM END.

(a) SAME SIZE AND SPACING AS B2 BARS

(b) VARIES, 12" MAXIMUM

(c) J4 BAR SPACING

(d) SAME SIZE AND SPACING AS B2 BARS

(e) A2 BAR SPACING

(f) NOT SPECIFIED ON THIS SHEET

(g) NOT SPECIFIED ON THIS SHEET

(h) FOR DESIGN FILLS OVER 2'-0"

(i) FOR DESIGN FILLS 2'-0" OR LESS

MISSOURI HIGHWAYS AND TRANSPORTATION COMMISSION
105 WEST CAPITOL
JEFFERSON CITY, MO 65102
1-888-ASK-MODOT (1-888-275-6636)

STATE OF MISSOURI
DENNIS W. HECKMAN
NUMBER PE-27141
PROFESSIONAL ENGINEER
THIS SHEET HAS BEEN SIGNED, SEALED AND DATED ELECTRONICALLY.

# CONCRETE SINGLE BOX CULVERT

SKEW: SQUARE
WINGS: FLARED

REINFORCEMENT

DATE EFFECTIVE: 04/01/2011
DATE PREPARED: 9/8/2011

703.11H

SHEET NO. 2 OF 3

IF A SEAL IS PRESENT ON THIS SHEET IT HAS BEEN ELECTRONICALLY SEALED AND DATED.

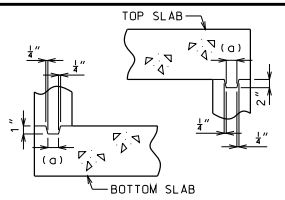


KEYED CONSTRUCTION JOINT

(a) APPROXIMATELY ONE-THIRD OF WALL THICKNESS

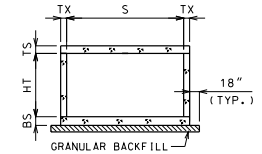


GRANULAR BACKFILL LIMITS AND MEMBER DIMENSIONS

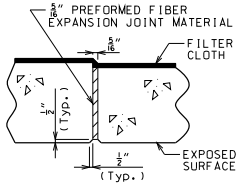


TRANSVERSE JOINT THRU BARREL

PREFORMED FIBER EXPANSION JOINT MATERIAL SHALL BE SECURELY STITCHED TO ONE FACE OF THE CONCRETE WITH NO. 10 GAGE COPPER WIRE OR NO. 12 GAGE SOFT DRAWN GALVANIZED STEEL WIRE.

FILTER CLOTH 3 FEET IN WIDTH AND DOUBLE THICKNESS SHALL BE CENTERED ON TRANSVERSE JOINTS IN TOP SLAB AND SIDEWALLS WITH EDGES SEALED WITH MASTIC OR TWO SIDED TAPE. FILTER CLOTH SHALL BE A SUBSURFACE DRAINAGE GEOTEXTILE IN ACCORDANCE WITH SECTION 1011 OF THE STANDARD SPECIFICATIONS FOR HIGHWAY CONSTRUCTION. COST OF FURNISHING AND INSTALLING FILTER CLOTH WILL BE CONSIDERED COMPLETELY COVERED BY THE CONTRACT UNIT PRICE FOR OTHER ITEMS.

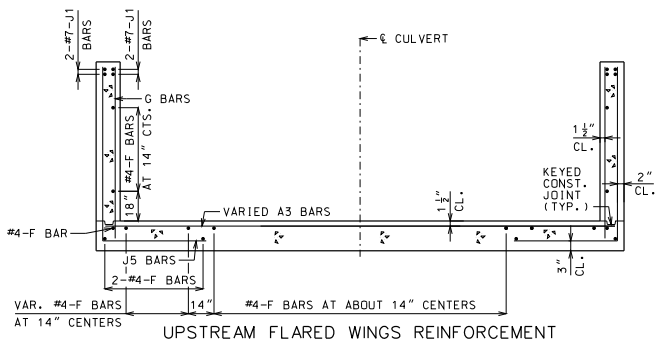


UPSTREAM FLARED WINGS REINFORCEMENT

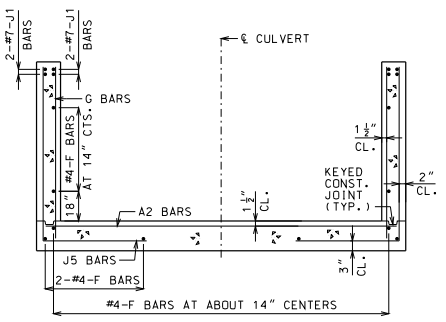


DOWNSTREAM WINGS REINFORCEMENT

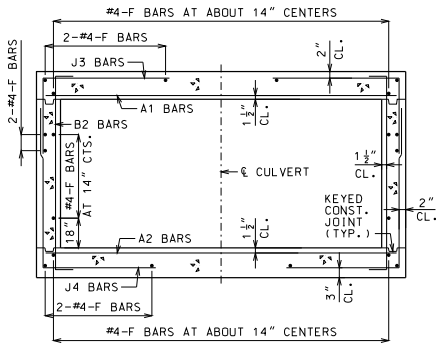


BARREL REINFORCEMENT

FOR DESIGN FILLS OVER 2'-0"

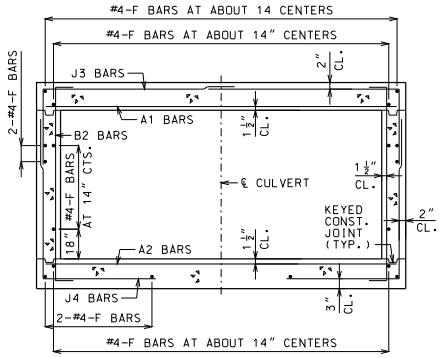


BARREL REINFORCEMENT

FOR DESIGN FILLS 2'-0" OR LESS

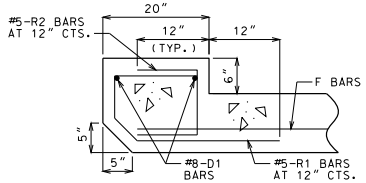


UPSTREAM HEADWALL REINFORCEMENT

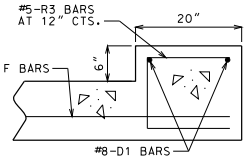


DOWNSTREAM HEADWALL REINFORCEMENT

GENERAL NOTES:

FOR MEMBER THICKNESS AND FOR BAR SIZES, SPACING AND DIMENSIONS OF ALL REINFORCEMENT EXCEPT J5 BARS, SEE 703.17. FOR J5 BARS, SEE 703.37.

BARREL AND WINGS SECTIONS ARE SYMMETRICAL ABOUT AND NORMAL TO ℄ CULVERT. HEADWALL SECTIONS ARE NORMAL TO LONG DIRECTION OF HEADWALL.

DRAWING NOT TO SCALE. FOLLOW DIMENSIONS.

MINIMUM CLEARANCE TO REINFORCING STEEL SHALL BE 1½".

MISSOURI HIGHWAYS AND TRANSPORTATION COMMISSION
105 WEST CAPITOL
JEFFERSON CITY, MO 65102
1-888-ASK-MODOT (1-888-275-6636)

STATE OF MISSOURI
DENNIS W. HECKMAN
NUMBER PE-27141
PROFESSIONAL ENGINEER
THIS SHEET HAS BEEN SIGNED, SEALED AND DATED ELECTRONICALLY.

# CONCRETE SINGLE BOX CULVERT

SKEW: SQUARE
WINGS: FLARED

SECTIONS

DATE EFFECTIVE: 04/01/2011
DATE PREPARED: 9/8/2011

703.11H

SHEET NO. 3 OF 3

IF A SEAL IS PRESENT ON THIS SHEET IT HAS BEEN ELECTRONICALLY SEALED AND DATED.

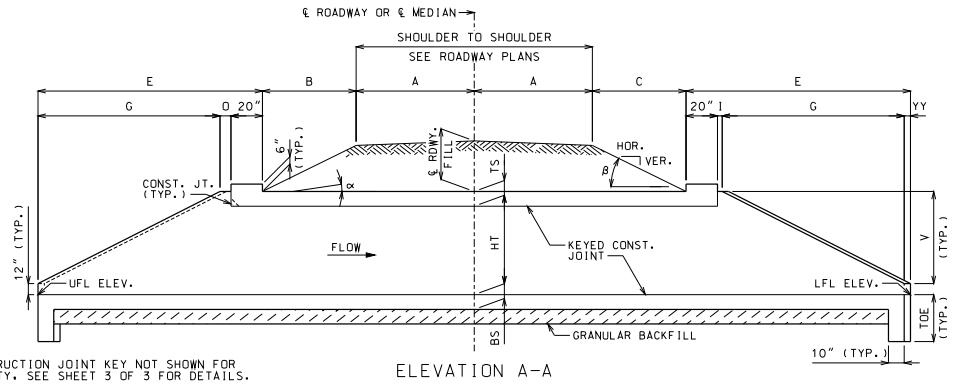


ELEVATION A-A

CONSTRUCTION JOINT KEY NOT SHOWN FOR CLARITY. SEE SHEET 3 OF 3 FOR DETAILS.

IF UNSUITABLE MATERIAL IS ENCOUNTERED, EXCAVATION OF UNSUITABLE MATERIAL AND FURNISHING AND PLACING OF GRANULAR BACKFILL SHALL BE IN ACCORDANCE WITH SECTION 206 OF THE STANDARD SPECIFICATIONS FOR HIGHWAY CONSTRUCTION.

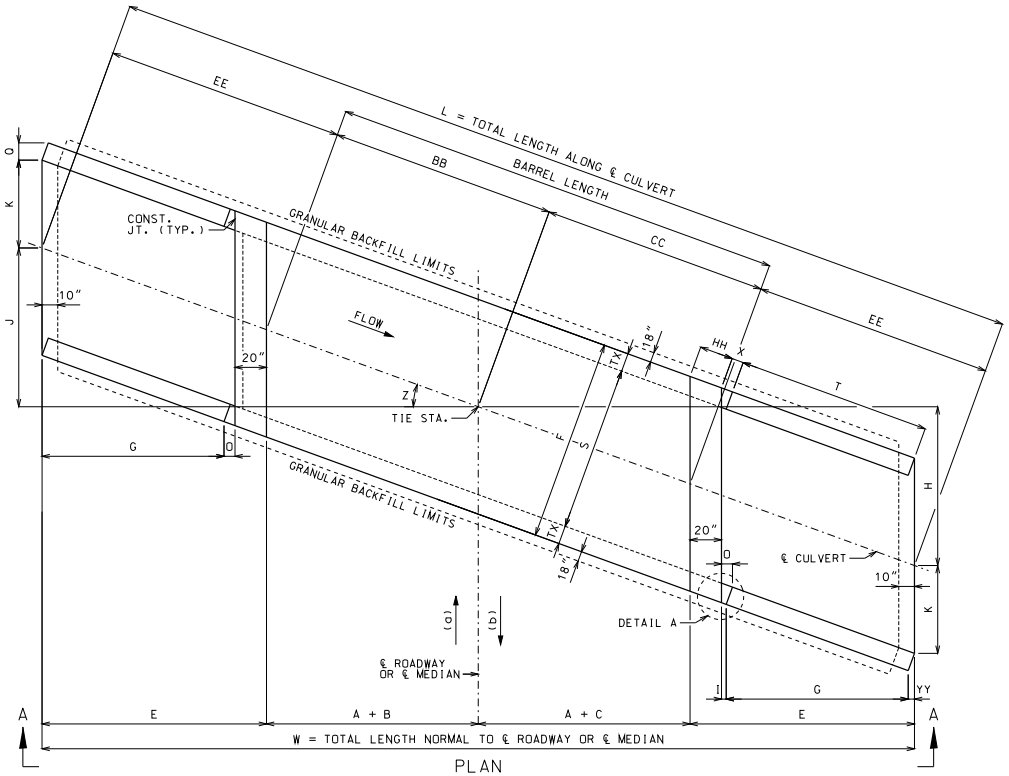


PLAN

(a) AHEAD STATION WHERE STREAM FLOWS LEFT TO RIGHT. (b) AHEAD STATION WHERE STREAM FLOWS RIGHT TO LEFT.

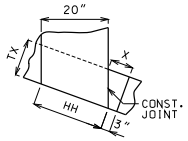


DETAIL A

## EQUATIONS FOR COMPUTING ∝, β, B AND C

∝ = ANGLE OF BARREL SLOPE WITH HORIZONTAL NORMAL TO ℄ ROADWAY OR ℄ MEDIAN = $\arctan\left(\frac{\text{UFL ELEV.} - \text{LFL ELEV.}}{W}\right)$

β = ANGLE OF FILL SLOPE WITH HORIZONTAL NORMAL TO ℄ ROADWAY OR ℄ MEDIAN = $\arctan\left(\frac{\text{VER.}}{\text{HOR.}}\right)$

B = HORIZONTAL DISTANCE FROM UPSTREAM EDGE OF SHOULDER TO UPSTREAM HEADWALL NORMAL TO ℄ ROADWAY OR ℄ MEDIAN = $\frac{\text{℄ RDWY. FILL} + A(CS) - A(\tan\alpha)}{\tan\beta + \tan\alpha}$

C = HORIZONTAL DISTANCE FROM DOWNSTREAM EDGE OF SHOULDER TO DOWNSTREAM HEADWALL NORMAL TO ℄ ROADWAY OR ℄ MEDIAN = $\frac{\text{℄ RDWY. FILL} + A(CS) + A(\tan\alpha)}{\tan\beta - \tan\alpha}$

CS = CROSS SLOPE OF EACH PART OF ROADWAY INCLUDING CROWN, LANES AND SHOULDERS. CS IS POSITIVE IF RISING AND NEGATIVE IF FALLING AWAY FROM ℄ ROADWAY OR ℄ MEDIAN.

THE TERM "A(CS)" IS THE DIFFERENCE IN ELEVATION BETWEEN ℄ ROADWAY OR ℄ MEDIAN AND THE TOP OF THE FILL SLOPE NORMAL TO ℄ ROADWAY OR ℄ MEDIAN. THIS TERM SHALL BE ADJUSTED FOR UNSYMMETRICAL AND NONSTANDARD ROADWAYS.

TO ACCOUNT FOR A VARYING PROFILE GRADE THE ℄ ROADWAY FILL SHALL BE BASED ON STATIONS THAT CORRESPOND TO THE CORNERS OF THE INSIDE FACE OF THE HEADWALLS THAT PRODUCE MAXIMUM VALUES FOR B AND C.

SEE ROADWAY PLANS FOR FILL SLOPES, CROSS SLOPES, ℄ ROADWAY FILL, UPPER FLOW LINE (UFL) ELEVATION AND LOWER FLOW LINE (LFL) ELEVATION.

## LAYOUT DIMENSIONS

| VARIABLE | DIMENSION |
|---|---|
| ∝ | SEE EQUATIONS |
| β | SEE EQUATIONS |
| B | SEE EQUATIONS |
| C | SEE EQUATIONS |
| E | G + O + 20" |
| F | S + 2TX |
| G | 2V |
| H | (A + C + E)(TAN Z) |
| I | 3"(COS Z) |
| J | (A + B + E)(TAN Z) |
| K | (S/2)(SEC Z) |
| L | 2EE + BB + CC |
| O | I + YY |

| VARIABLE | DIMENSION |
|---|---|
| O | TX(COS Z) |
| T | G(SEC Z) |
| V | HT + TS - 12" |
| W | 2A + B + C + 2E |
| X | 3" + TX(TAN Z) |
| Z | SKEW ANGLE |
| BB | (A + B)(SEC Z) |
| CC | (A + C)(SEC Z) |
| EE | E(SEC Z) |
| HH | 20"(SEC Z) |
| YY | TX(SIN Z) |
| TOE | MAX{(BS + 12"), 40"} |

## GENERAL NOTES:

DESIGN SPECIFICATIONS: 2010 AASHTO LRFD BRIDGE DESIGN SPECFICATIONS AND 2010 INTERIM REVISIONS

DESIGN UNIT STRESSES: CLASS B-1 CONCRETE f'c = 4,000 PSI
REINFORCING STEEL (GRADE 60) fy = 60,000 PSI

DESIGN LOADS: VEHICULAR = HL-93 MINUS LANE LOAD
EARTH = 120 LB/FT³
EQUIVALENT FLUID PRESSURE = 30 LB/FT³ (MIN.) - 60 LB/FT³ (MAX.)

FOR REINFORCEMENT DETAILS, SEE SHEET 2 OF 3. FOR SECTION DETAILS, SEE SHEET 3 OF 3. FOR MEMBER THICKNESS, SEE 703.17.

DRAWING NOT TO SCALE. FOLLOW DIMENSIONS.

DIMENSIONS ARE IN INCHES UNLESS OTHERWISE NOTED.

WHEN ALTERNATE PRECAST CONCRETE BOX CULVERT SECTIONS ARE USED, THE MINIMUM DISTANCE FROM INSIDE FACE OF HEADWALLS TO PRECAST SECTIONS MEASURED ALONG THE SHORTEST WALL SHALL BE 3 FEET. REINFORCEMENT AND DIMENSIONS FOR WINGS AND HEADWALLS SHALL BE IN ACCORDANCE WITH MISSOURI STANDARD PLANS.

MISSOURI HIGHWAYS AND TRANSPORTATION COMMISSION
105 WEST CAPITOL
JEFFERSON CITY, MO 65102
1-888-ASK-MODOT (1-888-275-6636)

STATE OF MISSOURI
DENNIS W. HECKMAN
NUMBER PE-27141
PROFESSIONAL ENGINEER
THIS SHEET WAS SIGNED, SEALED AND DATED ELECTRONICALLY.

# CONCRETE SINGLE BOX CULVERT

SKEW: LEFT ADVANCE
WINGS: STRAIGHT

LAYOUT

DATE EFFECTIVE: 04/01/2011
DATE PREPARED: 9/8/2011

703.12H

SHEET NO. 1 OF 3

IF A SEAL IS PRESENT ON THIS SHEET IT HAS BEEN ELECTRONICALLY SEALED AND DATED.

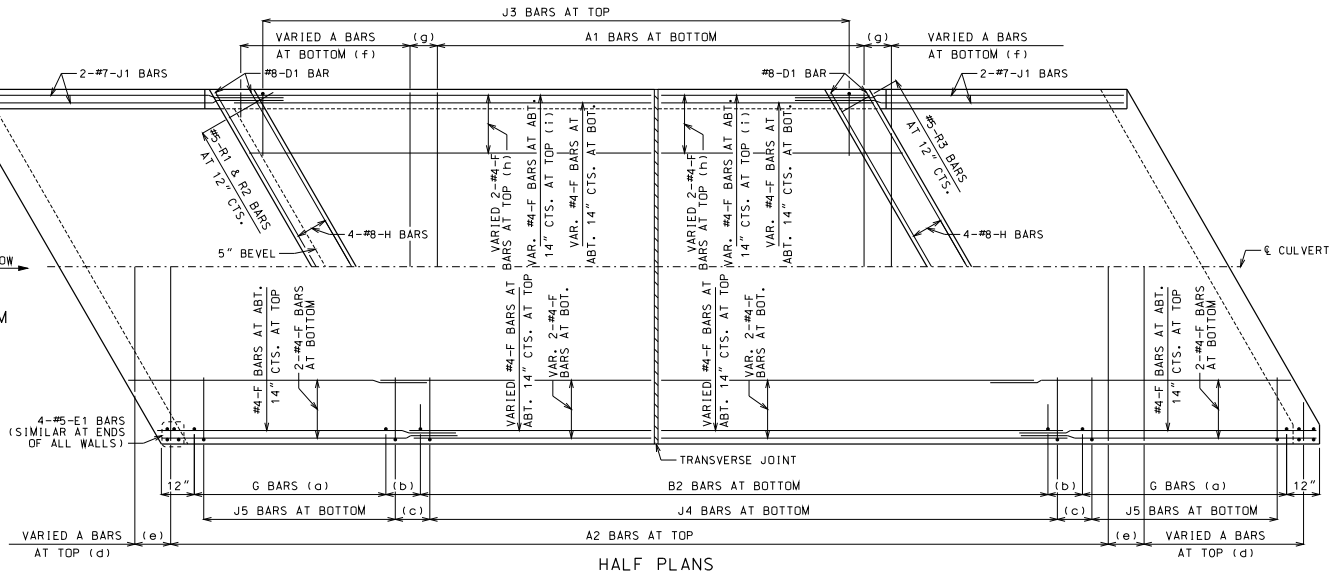


## HALF PLANS

HALF PLANS ARE SYMMETRICAL ABOUT ℄ CULVERT.

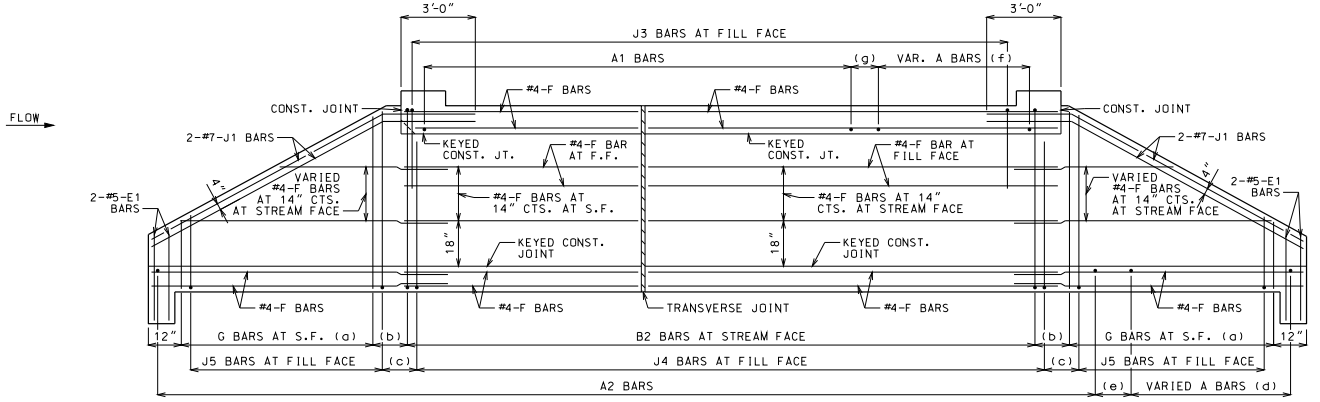


## ELEVATION

J1 BARS MAY BE BENT IN FIELD OR SHOP.

## LAYING OUT TRANVERSE JOINTS

UNLESS SHOWN ON ROADWAY OR BRIDGE PLANS

USE A TRANSVERSE JOINT WHEN BARREL LENGTH IS OVER 80 FEET. USE ADDITIONAL JOINTS TO LIMIT CUT SECTION LENGTH AND END SECTION BARREL LENGTH MEASURED ALONG CENTERLINE OF CULVERT TO 50 FEET.

MINIMUM END SECTION LENGTH SHALL BE 3 FEET MEASURED ALONG THE SHORTEST WALL FROM THE INSIDE FACE OF HEADWALL TO THE TRANSVERSE JOINT.

TO AVOID LOCATING TRANSVERSE JOINTS UNDER A TRAVELED WAY WITH DESIGN FILLS 2 FEET OR LESS THE FOLLOWING SHALL APPLY:

BARREL LENGTH UP TO 90 FEET WITHOUT A TRANSVERSE JOINT

CUT SECTION LENGTHS UP TO 60 FEET

WHEN BARREL AND CUT SECTION LENGTH RESTRICTIONS REQUIRE TRANSVERSE JOINTS TO BE LOCATED UNDER A TRAVELED WAY WITH DESIGN FILLS 2 FEET OR LESS, THE JOINTS SHALL BE LOCATED TO MINIMIZE THE LENGTH OF JOINT UNDER THE TRAVELED WAY.

TRAVELED WAY IS THE ROADWAY WIDTH MINUS SHOULDER WIDTHS.

FOR CUT SECTION DETAILS. SEE 703.16.

## GENERAL NOTES:

FOR SECTIONS THRU BARREL, WINGS AND HEADWALLS. SEE SHEET 3 OF 3. FOR BAR SIZES, SPACING AND DIMENSIONS OF ALL REINFORCEMENT EXCEPT J5 BARS, SEE 703.17. FOR J5 BARS, SEE 703.37.

CONSTRUCTION JOINT KEY NOT SHOWN FOR CLARITY IN HALF PLANS AND ELEVATION. SEE SHEET 3 OF 3 FOR DETAILS.

DRAWING NOT TO SCALE. FOLLOW DIMENSIONS.

MINIMUM CLEARANCE TO REINFORCING STEEL SHALL BE 1½".

LAP LONGITUDINAL BARS A MINIMUM OF 23" AT SPLICES.

BEVELED HEADWALL SHALL BE LOCATED AT UPSTREAM END.

(a) SAME SIZE AND SPACING AS B2 BARS

(b) VARIES, 12" MAXIMUM

(c) J4 BAR SPACING

(d) SAME SIZE AND SPACING AS A2 BARS

(e) A2 BAR SPACING

(f) SAME SIZE AND SPACING AS A1 BARS

(g) A1 BAR SPACING

(h) FOR DESIGN FILLS OVER 2'-0"

(i) FOR DESIGN FILLS 2'-0" OR LESS

MISSOURI HIGHWAYS AND TRANSPORTATION COMMISSION
105 WEST CAPITOL
JEFFERSON CITY, MO 65102
1-888-ASK-MODOT (1-888-275-6636)

STATE OF MISSOURI
DENNIS W. HECKMAN
NUMBER PE-27141
PROFESSIONAL ENGINEER
THIS SHEET HAS BEEN SIGNED, SEALED AND DATED ELECTRONICALLY.

# CONCRETE SINGLE BOX CULVERT

SKEW: LEFT ADVANCE
WINGS: STRAIGHT

REINFORCEMENT

DATE EFFECTIVE: 04/01/2011
DATE PREPARED: 9/8/2011

703.12H

SHEET NO. 2 OF 3

IF A SEAL IS PRESENT ON THIS SHEET IT HAS BEEN ELECTRONICALLY SEALED AND DATED.

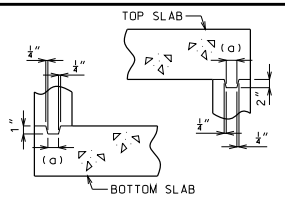


KEYED CONSTRUCTION JOINT

(a) APPROXIMATELY ONE-THIRD OF WALL THICKNESS

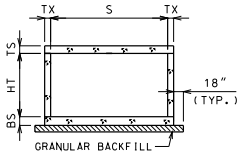


GRANULAR BACKFILL LIMITS AND MEMBER DIMENSIONS

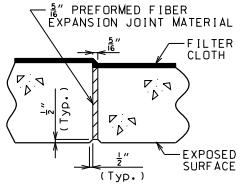


TRANSVERSE JOINT THRU BARREL

PREFORMED FIBER EXPANSION JOINT MATERIAL SHALL BE SECURELY STITCHED TO ONE FACE OF THE CONCRETE WITH NO. 10 GAGE COPPER WIRE OR NO. 12 GAGE SOFT DRAWN GALVANIZED STEEL WIRE.

FILTER CLOTH 3 FEET IN WIDTH AND DOUBLE THICKNESS SHALL BE CENTERED ON TRANSVERSE JOINTS IN TOP SLAB AND SIDEWALLS WITH EDGES SEALED WITH MASTIC OR TWO SIDED TAPE. FILTER CLOTH SHALL BE A SUBSURFACE DRAINAGE GEOTEXTILE IN ACCORDANCE WITH SECTION 1011 OF THE STANDARD SPECIFICATIONS FOR HIGHWAY CONSTRUCTION. COST OF FURNISHING AND INSTALLING FILTER CLOTH WILL BE CONSIDERED COMPLETELY COVERED BY THE CONTRACT UNIT PRICE FOR OTHER ITEMS.

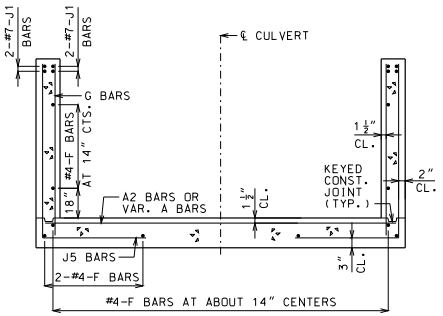


UPSTREAM AND DOWNSTREAM WINGS REINFORCEMENT

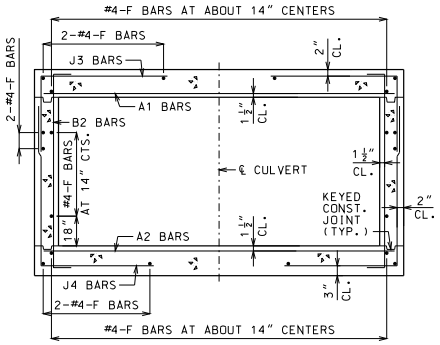


BARREL REINFORCEMENT

FOR DESIGN FILLS OVER 2'-0"

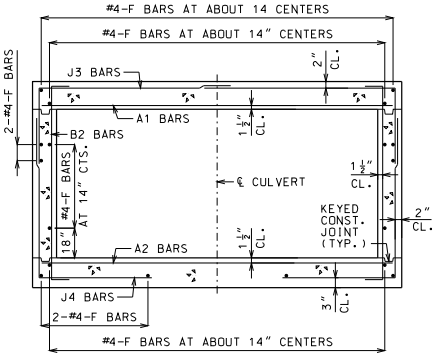


BARREL REINFORCEMENT

FOR DESIGN FILLS 2'-0" OR LESS

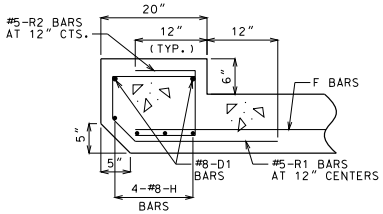


UPSTREAM HEADWALL REINFORCEMENT

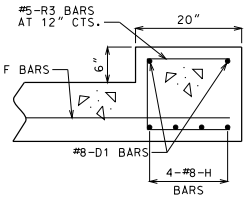


DOWNSTREAM HEADWALL REINFORCEMENT

GENERAL NOTES:

FOR MEMBER THICKNESS AND FOR BAR SIZES, SPACING AND DIMENSIONS OF ALL REINFORCEMENT EXCEPT J5 BARS, SEE 703.17. FOR J5 BARS, SEE 703.37.

BARREL AND WINGS SECTIONS ARE SYMMETRICAL ABOUT AND NORMAL TO ℄ CULVERT. HEADWALL SECTIONS ARE NORMAL TO LONG DIRECTION OF HEADWALL.

DRAWING NOT TO SCALE. FOLLOW DIMENSIONS.

MINIMUM CLEARANCE TO REINFORCING STEEL SHALL BE 1 1/2".

MISSOURI HIGHWAYS AND TRANSPORTATION COMMISSION
105 WEST CAPITOL
JEFFERSON CITY, MO 65102
1-888-ASK-MODOT (1-888-275-6636)

STATE OF MISSOURI
DENNIS W. HECKMAN
NUMBER PE-27141
PROFESSIONAL ENGINEER
THIS SHEET HAS BEEN SIGNED, SEALED AND DATED ELECTRONICALLY.

# CONCRETE SINGLE BOX CULVERT

SKEW: LEFT ADVANCE
WINGS: STRAIGHT

SECTIONS

DATE EFFECTIVE: 04/01/2011
DATE PREPARED: 9/8/2011

703.12H

SHEET NO. 3 OF 3

IF A SEAL IS PRESENT ON THIS SHEET IT HAS BEEN ELECTRONICALLY SEALED AND DATED.

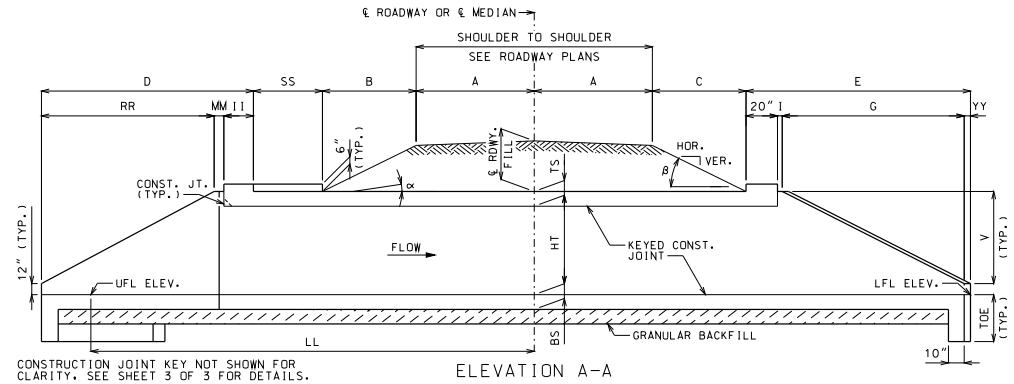


ELEVATION A-A

CONSTRUCTION JOINT KEY NOT SHOWN FOR CLARITY. SEE SHEET 3 OF 3 FOR DETAILS.

IF UNSUITABLE MATERIAL IS ENCOUNTERED, EXCAVATION OF UNSUITABLE MATERIAL AND FURNISHING AND PLACING OF GRANULAR BACKFILL SHALL BE IN ACCORDANCE WITH SECTION 206 OF THE STANDARD SPECIFICATIONS FOR HIGHWAY CONSTRUCTION.

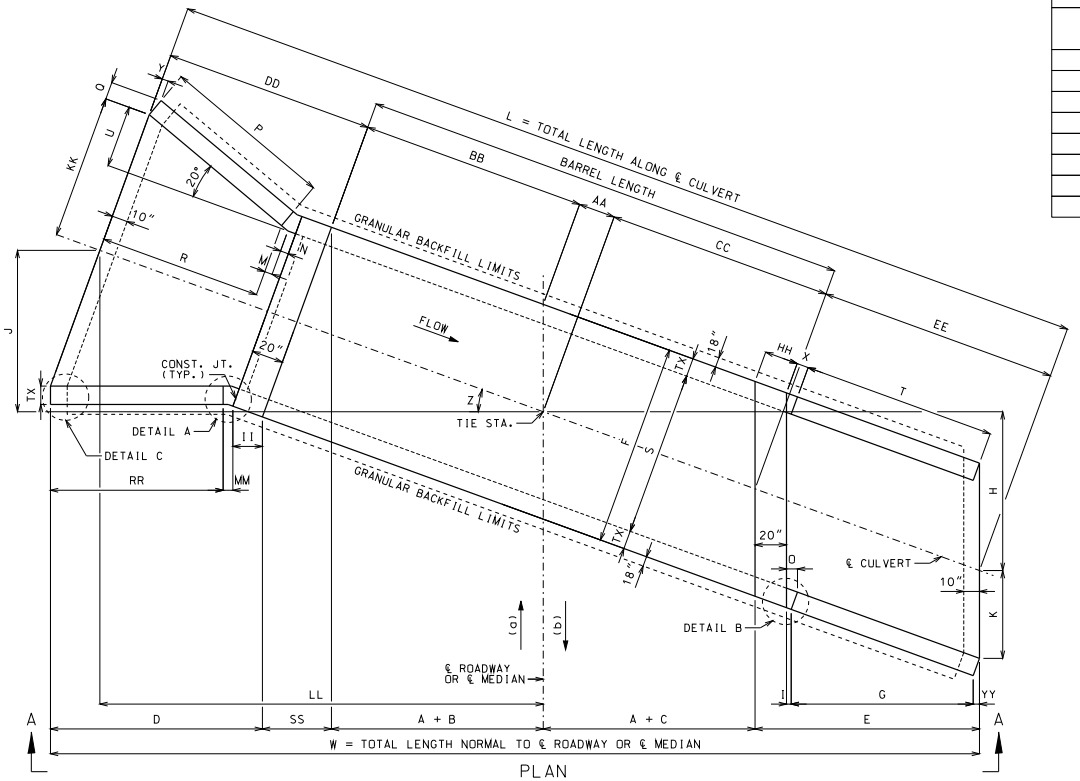


PLAN

(a) AHEAD STATION WHERE STREAM FLOWS LEFT TO RIGHT. (b) AHEAD STATION WHERE STREAM FLOWS RIGHT TO LEFT.

## EQUATIONS FOR COMPUTING $\alpha$, $\beta$, B AND C

$\alpha$ = ANGLE OF BARREL SLOPE WITH HORIZONTAL NORMAL TO ℄ ROADWAY OR ℄ MEDIAN = $\arctan\left(\frac{\text{UFL ELEV.} - \text{LFL ELEV.}}{W}\right)$

$\beta$ = ANGLE OF FILL SLOPE WITH HORIZONTAL NORMAL TO ℄ ROADWAY OR ℄ MEDIAN = $\arctan\left(\frac{\text{VER.}}{\text{HOR.}}\right)$

B = HORIZONTAL DISTANCE FROM UPSTREAM EDGE OF SHOULDER TO UPSTREAM HEADWALL NORMAL TO ℄ ROADWAY OR ℄ MEDIAN = $\frac{\text{℄ RDWY. FILL} + A(CS) - A(TAN\alpha)}{TAN\beta + TAN\alpha}$

C = HORIZONTAL DISTANCE FROM DOWNSTREAM EDGE OF SHOULDER TO DOWNSTREAM HEADWALL NORMAL TO ℄ ROADWAY OR ℄ MEDIAN = $\frac{\text{℄ RDWY. FILL} + A(CS) + A(TAN\alpha)}{TAN\beta - TAN\alpha}$

CS = CROSS SLOPE OF EACH PART OF ROADWAY INCLUDING CROWN, LANES AND SHOULDERS. CS IS POSITIVE IF RISING AND NEGATIVE IF FALLING AWAY FROM ℄ ROADWAY OR ℄ MEDIAN.

THE TERM "A(CS)" IS THE DIFFERENCE IN ELEVATION BETWEEN ℄ ROADWAY OR ℄ MEDIAN AND THE TOP OF THE FILL SLOPE NORMAL TO ℄ ROADWAY OR ℄ MEDIAN. THIS TERM SHALL BE ADJUSTED FOR UNSYMMETRICAL AND NONSTANDARD ROADWAYS.

TO ACCOUNT FOR A VARYING PROFILE GRADE THE ℄ ROADWAY FILL SHALL BE BASED ON STATIONS THAT CORRESPOND TO THE CORNERS OF THE INSIDE FACE OF THE HEADWALLS THAT PRODUCE MAXIMUM VALUES FOR B AND C.

SEE ROADWAY PLANS FOR FILL SLOPES, CROSS SLOPES, ℄ ROADWAY FILL, UPPER FLOW LINE (UFL) ELEVATION AND LOWER FLOW LINE (LFL) ELEVATION.

## LAYOUT DIMENSIONS

| VARIABLE | DIMENSION |
|---|---|
| $\alpha$ | SEE EQUATIONS |
| $\beta$ | SEE EQUATIONS |
| B | SEE EQUATIONS |
| C | SEE EQUATIONS |
| D | Z ≥ 20°: II + MM + RR |
| | Z < 20°: II + MM + RR + TT |
| E | G + O + 20" |
| F | S + 2TX |
| G | 2V |
| H | (A + C + E)(TAN Z) |
| I | 3"(COS Z) |
| J | (AA + BB + DD)(SIN Z) |
| K | (S/2)(SEC Z) |
| L | AA + BB + CC + DD + EE |

| VARIABLE | DIMENSION |
|---|---|
| M | N(COS 20°) |
| N | 3" + TX(TAN 10°) |
| O | I + YY |
| P | 2V[SEC(Z + 20°)] |
| Q | TX(COS 20°) |
| R | P(COS 20°) |
| T | G(SEC Z) |
| U | (R + M)(TAN 20°) |
| V | HT + TS - 12" |
| W | 2A + B + C + D + E + SS |
| X | 3" + TX(TAN Z) |
| Y | TX(SIN 20°) |
| Z | SKEW ANGLE |
| AA | (F/2)(TAN Z) |

| VARIABLE | DIMENSION |
|---|---|
| BB | (A + B)(SEC Z) |
| CC | (A + C)(SEC Z) |
| DD | R + M + N + 20" |
| EE | E(SEC Z) |
| HH | 20"(SEC Z) |
| II | 20"(COS Z) |
| KK | (S/2) + U |
| LL | (AA + BB + DD)(COS Z) |
| MM | 3"[COS Z + COS(Z - 20°)] |
| RR | P [COS (Z - 20°)] |
| SS | F(SIN Z) |
| TT | TX[SIN(20° - Z)] |
| YY | TX(SIN Z) |
| TOE | MAX{(BS + 12"), 40"} |

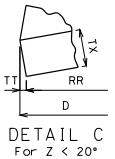


DETAIL C
For Z < 20°

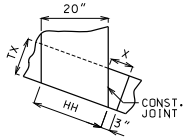


DETAIL B

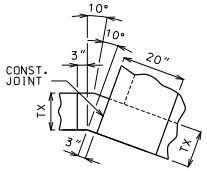


DETAIL A

## GENERAL NOTES:

DESIGN SPECIFICATIONS: 2010 AASHTO LRFD BRIDGE DESIGN SPECFICATIONS AND 2010 INTERIM REVISIONS

DESIGN UNIT STRESSES: CLASS B-1 CONCRETE f'c = 4,000 PSI
REINFORCING STEEL (GRADE 60) fy = 60,000 PSI

DESIGN LOADS: VEHICULAR = HL-93 MINUS LANE LOAD
EARTH = 120 LB/FT³
EQUIVALENT FLUID PRESSURE = 30 LB/FT³ (MIN.) - 60 LB/FT³ (MAX.)

FOR REINFORCEMENT DETAILS, SEE SHEET 2 OF 3. FOR SECTION DETAILS, SEE SHEET 3 OF 3. FOR MEMBER THICKNESS, SEE 703.17.

DRAWING NOT TO SCALE. FOLLOW DIMENSIONS.

DIMENSIONS ARE IN INCHES UNLESS OTHERWISE NOTED.

WHEN ALTERNATE PRECAST CONCRETE BOX CULVERT SECTIONS ARE USED, THE MINIMUM DISTANCE FROM INSIDE FACE OF HEADWALLS TO PRECAST SECTIONS MEASURED ALONG THE SHORTEST WALL SHALL BE 3 FEET. REINFORCEMENT AND DIMENSIONS FOR WINGS AND HEADWALLS SHALL BE IN ACCORDANCE WITH MISSOURI STANDARD PLANS.


MISSOURI HIGHWAYS AND TRANSPORTATION COMMISSION
105 WEST CAPITOL
JEFFERSON CITY, MO 65102
1-888-ASK-MODOT (1-888-275-6636)


STATE OF MISSOURI — DENNIS W. HECKMAN — NUMBER PE-27141 — PROFESSIONAL ENGINEER
THIS SHEET HAS BEEN SIGNED, SEALED AND DATED ELECTRONICALLY.

# CONCRETE SINGLE BOX CULVERT

SKEW: LEFT ADVANCE
WINGS: FLARED

LAYOUT

| DATE EFFECTIVE: | 04/01/2011 | 703.13H | SHEET NO. 1 OF 3 |
|---|---|---|---|
| DATE PREPARED: | 9/8/2011 | | |

IF A SEAL IS PRESENT ON THIS SHEET IT HAS BEEN ELECTRONICALLY SEALED AND DATED.

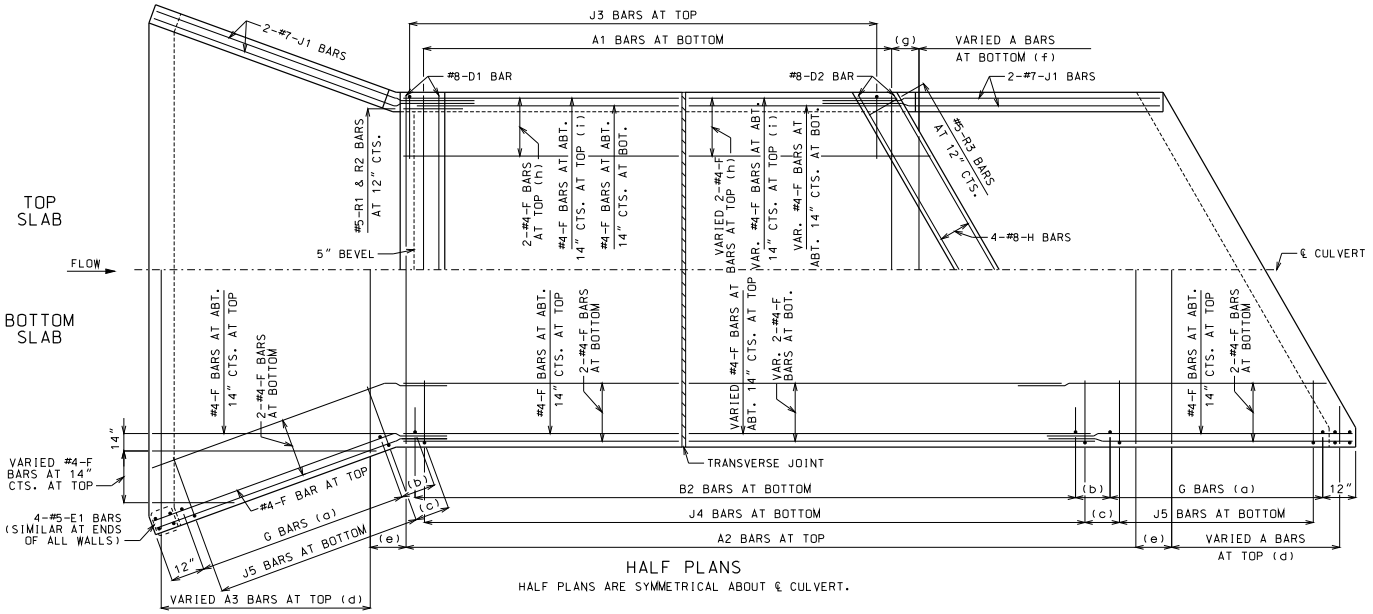


## HALF PLANS

HALF PLANS ARE SYMMETRICAL ABOUT ℄ CULVERT.

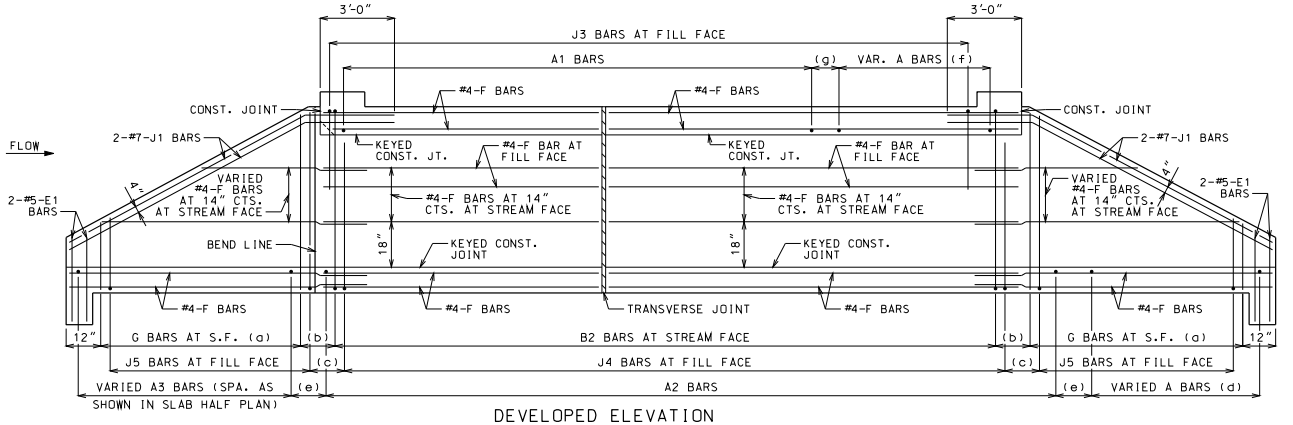


## DEVELOPED ELEVATION

J1 BARS MAY BE BENT IN FIELD OR SHOP.

## LAYING OUT TRANVERSE JOINTS

UNLESS SHOWN ON ROADWAY OR BRIDGE PLANS

USE A TRANSVERSE JOINT WHEN BARREL LENGTH IS OVER 80 FEET. USE ADDITIONAL JOINTS TO LIMIT CUT SECTION LENGTH AND END SECTION BARREL LENGTH MEASURED ALONG CENTERLINE OF CULVERT TO 50 FEET.

MINIMUM END SECTION LENGTH SHALL BE 3 FEET MEASURED ALONG THE SHORTEST WALL FROM THE INSIDE FACE OF HEADWALL TO THE TRANSVERSE JOINT.

TO AVOID LOCATING TRANSVERSE JOINTS UNDER A TRAVELED WAY WITH DESIGN FILLS 2 FEET OR LESS THE FOLLOWING SHALL APPLY:

BARREL LENGTH UP TO 90 FEET WITHOUT A TRANSVERSE JOINT

CUT SECTION LENGTHS UP TO 60 FEET

WHEN BARREL AND CUT SECTION LENGTH RESTRICTIONS REQUIRE TRANSVERSE JOINTS TO BE LOCATED UNDER A TRAVELED WAY WITH DESIGN FILLS 2 FEET OR LESS, THE JOINTS SHALL BE LOCATED TO MINIMIZE THE LENGTH OF JOINT UNDER THE TRAVELED WAY.

TRAVELED WAY IS THE ROADWAY WIDTH MINUS SHOULDER WIDTHS.

FOR CUT SECTION DETAILS. SEE 703.16.

## GENERAL NOTES:

FOR SECTIONS THRU BARREL, WINGS AND HEADWALLS. SEE SHEET 3 OF 3. FOR BAR SIZES, SPACING AND DIMENSIONS OF ALL REINFORCEMENT EXCEPT J5 BARS. SEE 703.17. FOR J5 BARS. SEE 703.37.

CONSTRUCTION JOINT KEY NOT SHOWN FOR CLARITY IN HALF PLANS AND ELEVATION. SEE SHEET 3 OF 3 FOR DETAILS.

DRAWING NOT TO SCALE. FOLLOW DIMENSIONS.

MINIMUM CLEARANCE TO REINFORCING STEEL SHALL BE 1½".

LAP LONGITUDINAL BARS A MINIMUM OF 23" AT SPLICES.

BEVELED HEADWALL SHALL BE LOCATED AT UPSTREAM END.

(a) SAME SIZE AND SPACING AS B2 BARS

(b) VARIES. 12" MAXIMUM

(c) J4 BAR SPACING

(d) SAME SIZE AND SPACING AS A2 BARS

(e) A2 BAR SPACING

(f) SAME SIZE AND SPACING AS A1 BARS

(g) A1 BAR SPACING

(h) FOR DESIGN FILLS OVER 2'-0"

(i) FOR DESIGN FILLS 2'-0" OR LESS

MISSOURI HIGHWAYS AND TRANSPORTATION COMMISSION
105 WEST CAPITOL
JEFFERSON CITY, MO 65102
1-888-ASK-MODOT (1-888-275-6636)

STATE OF MISSOURI
DENNIS W. HECKMAN
NUMBER PE-27141
PROFESSIONAL ENGINEER
THIS SHEET HAS BEEN SIGNED, SEALED AND DATED ELECTRONICALLY.

# CONCRETE SINGLE BOX CULVERT

SKEW: LEFT ADVANCE
WINGS: FLARED

REINFORCEMENT

DATE EFFECTIVE: 04/01/2011
DATE PREPARED: 9/8/2011

703.13H

SHEET NO. 2 OF 3

IF A SEAL IS PRESENT ON THIS SHEET IT HAS BEEN ELECTRONICALLY SEALED AND DATED.

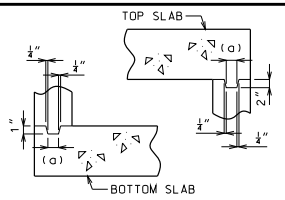


KEYED CONSTRUCTION JOINT

(a) APPROXIMATELY ONE-THIRD OF WALL THICKNESS

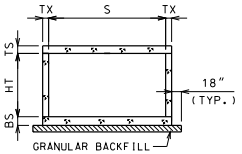


GRANULAR BACKFILL LIMITS AND MEMBER DIMENSIONS

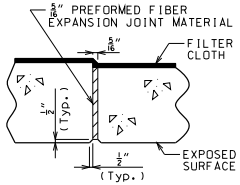


TRANSVERSE JOINT THRU BARREL

PREFORMED FIBER EXPANSION JOINT MATERIAL SHALL BE SECURELY STITCHED TO ONE FACE OF THE CONCRETE WITH NO. 10 GAGE COPPER WIRE OR NO. 12 GAGE SOFT DRAWN GALVANIZED STEEL WIRE.

FILTER CLOTH 3 FEET IN WIDTH AND DOUBLE THICKNESS SHALL BE CENTERED ON TRANSVERSE JOINTS IN TOP SLAB AND SIDEWALLS WITH EDGES SEALED WITH MASTIC OR TWO SIDED TAPE. FILTER CLOTH SHALL BE A SUBSURFACE DRAINAGE GEOTEXTILE IN ACCORDANCE WITH SECTION 1011 OF THE STANDARD SPECIFICATIONS FOR HIGHWAY CONSTRUCTION. COST OF FURNISHING AND INSTALLING FILTER CLOTH WILL BE CONSIDERED COMPLETELY COVERED BY THE CONTRACT UNIT PRICE FOR OTHER ITEMS.

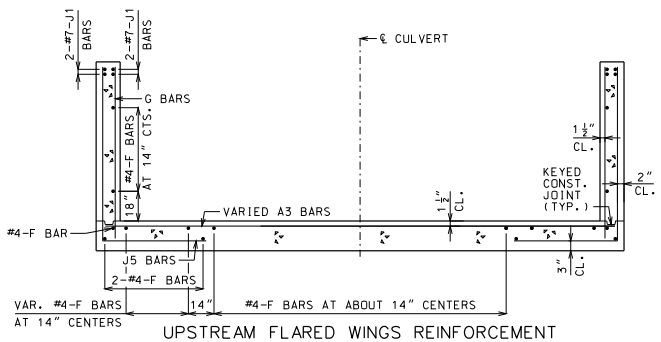


UPSTREAM FLARED WINGS REINFORCEMENT

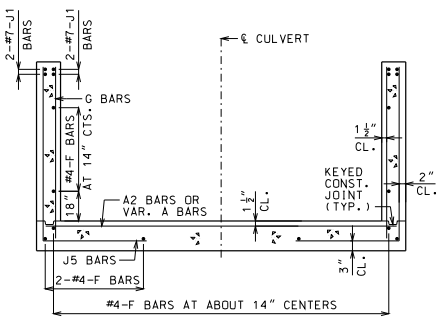


DOWNSTREAM WINGS REINFORCEMENT

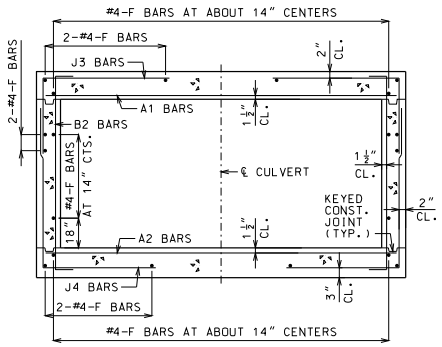


BARREL REINFORCEMENT

FOR DESIGN FILLS OVER 2'-0"

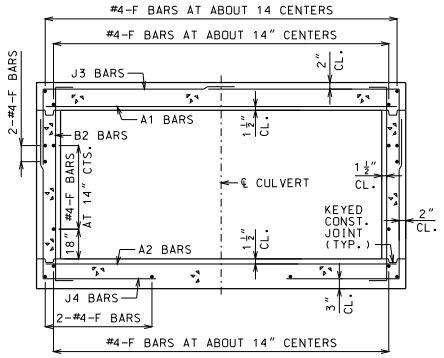


BARREL REINFORCEMENT

FOR DESIGN FILLS 2'-0" OR LESS

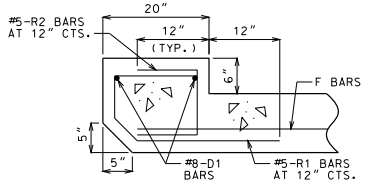


UPSTREAM HEADWALL REINFORCEMENT

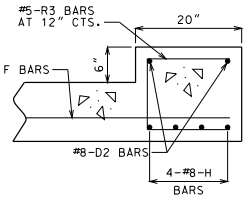


DOWNSTREAM HEADWALL REINFORCEMENT

GENERAL NOTES:

FOR MEMBER THICKNESS AND FOR BAR SIZES, SPACING AND DIMENSIONS OF ALL REINFORCEMENT EXCEPT J5 BARS, SEE 703.17. FOR J5 BARS, SEE 703.37.

BARREL AND WINGS SECTIONS ARE SYMMETRICAL ABOUT AND NORMAL TO ℄ CULVERT. HEADWALL SECTIONS ARE NORMAL TO LONG DIRECTION OF HEADWALL.

DRAWING NOT TO SCALE. FOLLOW DIMENSIONS.

MINIMUM CLEARANCE TO REINFORCING STEEL SHALL BE 1 1/2".

MISSOURI HIGHWAYS AND TRANSPORTATION COMMISSION
105 WEST CAPITOL
JEFFERSON CITY, MO 65102
1-888-ASK-MODOT (1-888-275-6636)

STATE OF MISSOURI
DENNIS W. HECKMAN
NUMBER PE-27141
PROFESSIONAL ENGINEER
THIS SHEET HAS BEEN SIGNED, SEALED AND DATED ELECTRONICALLY.

# CONCRETE SINGLE BOX CULVERT

SKEW: LEFT ADVANCE
WINGS: FLARED

SECTIONS

DATE EFFECTIVE: 04/01/2011
DATE PREPARED: 9/8/2011

703.13H

SHEET NO. 3 OF 3

IF A SEAL IS PRESENT ON THIS SHEET IT HAS BEEN ELECTRONICALLY SEALED AND DATED.

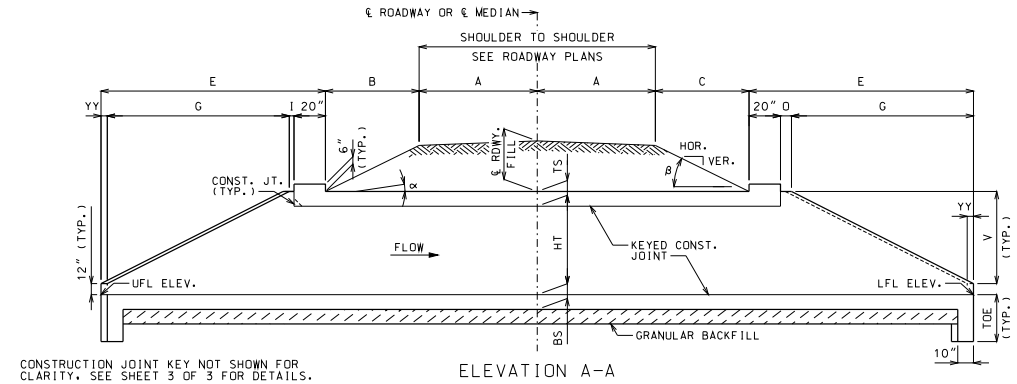


ELEVATION A-A

CONSTRUCTION JOINT KEY NOT SHOWN FOR CLARITY. SEE SHEET 3 OF 3 FOR DETAILS.

IF UNSUITABLE MATERIAL IS ENCOUNTERED, EXCAVATION OF UNSUITABLE MATERIAL AND FURNISHING AND PLACING OF GRANULAR BACKFILL SHALL BE IN ACCORDANCE WITH SECTION 206 OF THE STANDARD SPECIFICATIONS FOR HIGHWAY CONSTRUCTION.

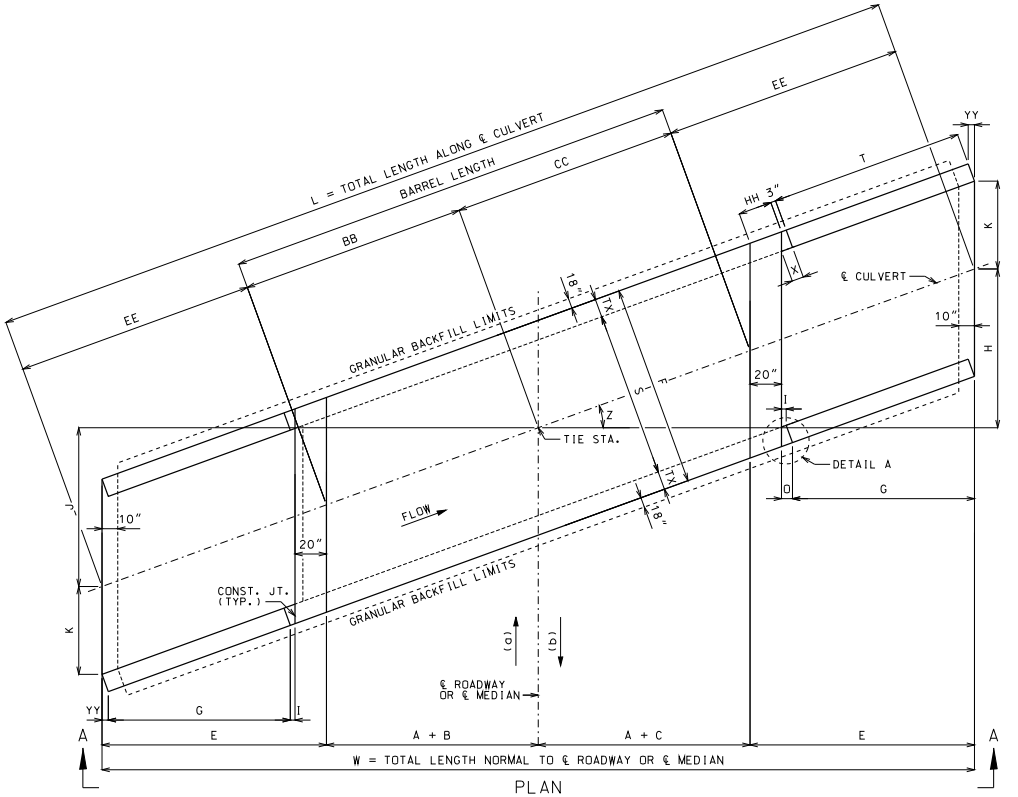


PLAN

(a) AHEAD STATION WHERE STREAM FLOWS LEFT TO RIGHT. (b) AHEAD STATION WHERE STREAM FLOWS RIGHT TO LEFT.

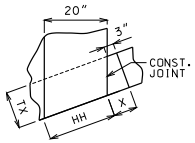


DETAIL A

## EQUATIONS FOR COMPUTING $\alpha$, $\beta$, B AND C

$\alpha$ = ANGLE OF BARREL SLOPE WITH HORIZONTAL NORMAL TO ℄ ROADWAY OR ℄ MEDIAN = $\arctan\left(\frac{\text{UFL ELEV.} - \text{LFL ELEV.}}{W}\right)$

$\beta$ = ANGLE OF FILL SLOPE WITH HORIZONTAL NORMAL TO ℄ ROADWAY OR ℄ MEDIAN = $\arctan\left(\frac{\text{VER.}}{\text{HOR.}}\right)$

B = HORIZONTAL DISTANCE FROM UPSTREAM EDGE OF SHOULDER TO UPSTREAM HEADWALL NORMAL TO ℄ ROADWAY OR ℄ MEDIAN = $\frac{\text{℄ RDWY. FILL} + A(CS) - A(TAN\alpha)}{TAN\beta + TAN\alpha}$

C = HORIZONTAL DISTANCE FROM DOWNSTREAM EDGE OF SHOULDER TO DOWNSTREAM HEADWALL NORMAL TO ℄ ROADWAY OR ℄ MEDIAN = $\frac{\text{℄ RDWY. FILL} + A(CS) + A(TAN\alpha)}{TAN\beta - TAN\alpha}$

CS = CROSS SLOPE OF EACH PART OF ROADWAY INCLUDING CROWN, LANES AND SHOULDERS. CS IS POSITIVE IF RISING AND NEGATIVE IF FALLING AWAY FROM ℄ ROADWAY OR ℄ MEDIAN.

THE TERM "A(CS)" IS THE DIFFERENCE IN ELEVATION BETWEEN ℄ ROADWAY OR ℄ MEDIAN AND THE TOP OF THE FILL SLOPE NORMAL TO ℄ ROADWAY OR ℄ MEDIAN. THIS TERM SHALL BE ADJUSTED FOR UNSYMMETRICAL AND NONSTANDARD ROADWAYS.

TO ACCOUNT FOR A VARYING PROFILE GRADE THE ℄ ROADWAY FILL SHALL BE BASED ON STATIONS THAT CORRESPOND TO THE CORNERS OF THE INSIDE FACE OF THE HEADWALLS THAT PRODUCE MAXIMUM VALUES FOR B AND C.

SEE ROADWAY PLANS FOR FILL SLOPES, CROSS SLOPES, ℄ ROADWAY FILL, UPPER FLOW LINE (UFL) ELEVATION AND LOWER FLOW LINE (LFL) ELEVATION.

## LAYOUT DIMENSIONS

| VARIABLE | DIMENSION |
|---|---|
| $\alpha$ | SEE EQUATIONS |
| $\beta$ | SEE EQUATIONS |
| B | SEE EQUATIONS |
| C | SEE EQUATIONS |
| E | G + O + 20" |
| F | S + 2TX |
| G | 2V |
| H | (A + C + E)(TAN Z) |
| I | 3"(COS Z) |
| J | (A + B + E)(TAN Z) |
| K | (S/2)(SEC Z) |
| L | 2EE + BB + CC |
| O | I + YY |

| VARIABLE | DIMENSION |
|---|---|
| O | TX(COS Z) |
| T | G(SEC Z) |
| V | HT + TS - 12" |
| W | 2A + B + C + 2E |
| X | 3" + TX(TAN Z) |
| Z | SKEW ANGLE |
| BB | (A + B)(SEC Z) |
| CC | (A + C)(SEC Z) |
| EE | E(SEC Z) |
| HH | 20"(SEC Z) |
| YY | TX(SIN Z) |
| TOE | MAX{(BS + 12"), 40"} |

## GENERAL NOTES:

DESIGN SPECIFICATIONS: 2010 AASHTO LRFD BRIDGE DESIGN SPECFICATIONS AND 2010 INTERIM REVISIONS

DESIGN UNIT STRESSES: CLASS B-1 CONCRETE f'c = 4,000 PSI
REINFORCING STEEL (GRADE 60) fy = 60,000 PSI

DESIGN LOADS: VEHICULAR = HL-93 MINUS LANE LOAD
EARTH = 120 LB/FT³
EQUIVALENT FLUID PRESSURE = 30 LB/FT³ (MIN.) - 60 LB/FT³ (MAX.)

FOR REINFORCEMENT DETAILS, SEE SHEET 2 OF 3. FOR SECTION DETAILS, SEE SHEET 3 OF 3. FOR MEMBER THICKNESS, SEE 703.17.

DRAWING NOT TO SCALE. FOLLOW DIMENSIONS.

DIMENSIONS ARE IN INCHES UNLESS OTHERWISE NOTED.

WHEN ALTERNATE PRECAST CONCRETE BOX CULVERT SECTIONS ARE USED, THE MINIMUM DISTANCE FROM INSIDE FACE OF HEADWALLS TO PRECAST SECTIONS MEASURED ALONG THE SHORTEST WALL SHALL BE 3 FEET. REINFORCEMENT AND DIMENSIONS FOR WINGS AND HEADWALLS SHALL BE IN ACCORDANCE WITH MISSOURI STANDARD PLANS.

MISSOURI HIGHWAYS AND TRANSPORTATION COMMISSION
105 WEST CAPITOL
JEFFERSON CITY, MO 65102
1-888-ASK-MODOT (1-888-275-6636)

STATE OF MISSOURI
DENNIS W. HECKMAN
NUMBER PE-27141
PROFESSIONAL ENGINEER
THIS SHEET HAS BEEN SIGNED, SEALED AND DATED ELECTRONICALLY.

# CONCRETE SINGLE BOX CULVERT

SKEW: RIGHT ADVANCE
WINGS: STRAIGHT

LAYOUT

DATE EFFECTIVE: 04/01/2011
DATE PREPARED: 9/8/2011

703.14H

SHEET NO. 1 OF 3

IF A SEAL IS PRESENT ON THIS SHEET IT HAS BEEN ELECTRONICALLY SEALED AND DATED.

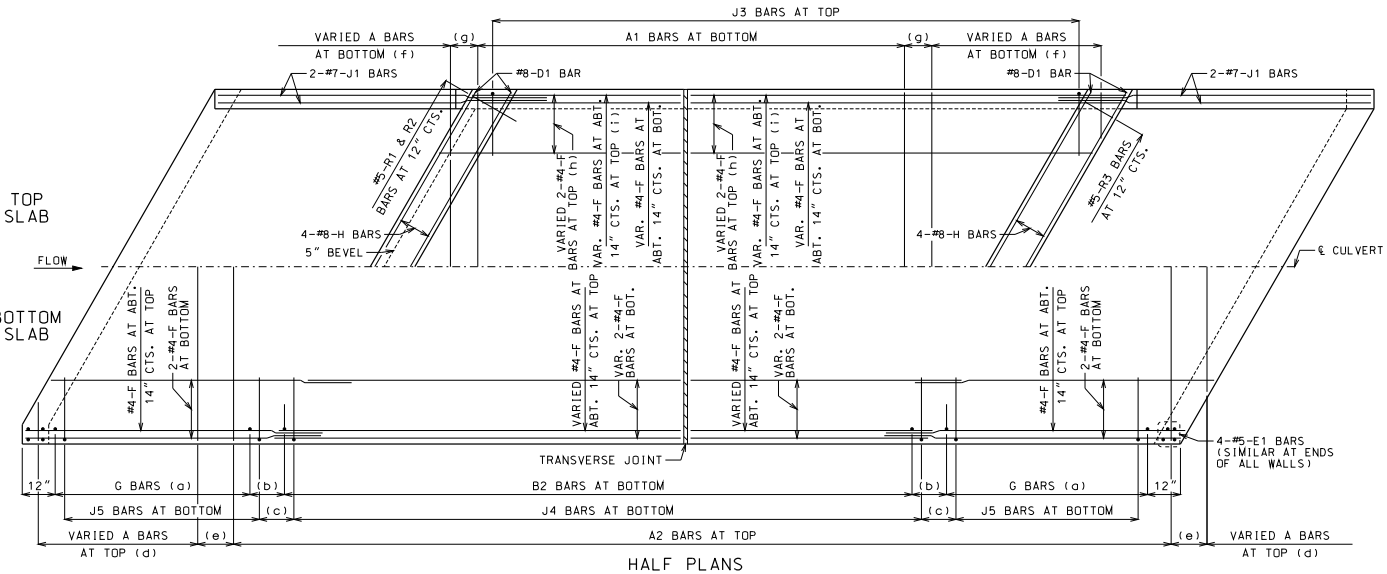


## HALF PLANS

HALF PLANS ARE SYMMETRICAL ABOUT ℄ CULVERT.

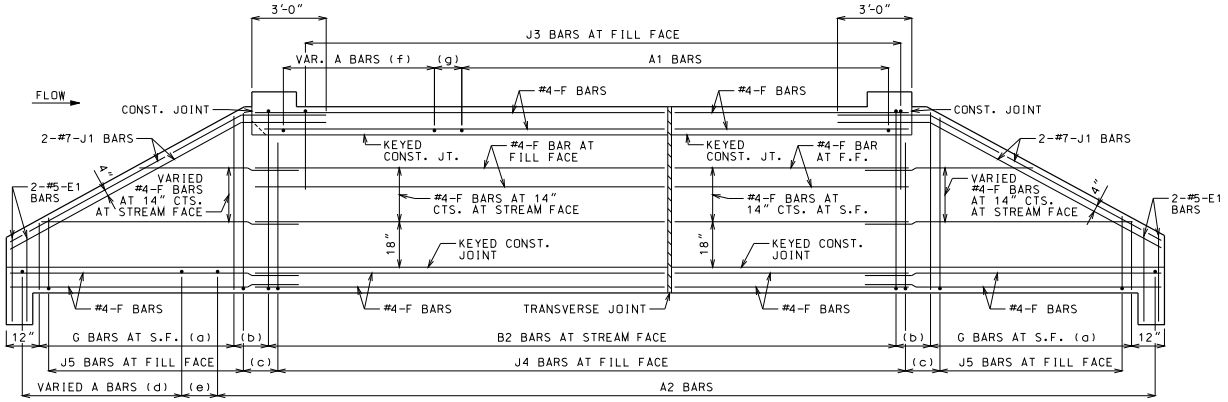


## ELEVATION

J1 BARS MAY BE BENT IN FIELD OR SHOP.

## LAYING OUT TRANVERSE JOINTS

UNLESS SHOWN ON ROADWAY OR BRIDGE PLANS

USE A TRANSVERSE JOINT WHEN BARREL LENGTH IS OVER 80 FEET. USE ADDITIONAL JOINTS TO LIMIT CUT SECTION LENGTH AND END SECTION BARREL LENGTH MEASURED ALONG CENTERLINE OF CULVERT TO 50 FEET.

MINIMUM END SECTION LENGTH SHALL BE 3 FEET MEASURED ALONG THE SHORTEST WALL FROM THE INSIDE FACE OF HEADWALL TO THE TRANSVERSE JOINT.

TO AVOID LOCATING TRANSVERSE JOINTS UNDER A TRAVELED WAY WITH DESIGN FILLS 2 FEET OR LESS THE FOLLOWING SHALL APPLY:

BARREL LENGTH UP TO 90 FEET WITHOUT A TRANSVERSE JOINT

CUT SECTION LENGTHS UP TO 60 FEET

WHEN BARREL AND CUT SECTION LENGTH RESTRICTIONS REQUIRE TRANSVERSE JOINTS TO BE LOCATED UNDER A TRAVELED WAY WITH DESIGN FILLS 2 FEET OR LESS, THE JOINTS SHALL BE LOCATED TO MINIMIZE THE LENGTH OF JOINT UNDER THE TRAVELED WAY.

TRAVELED WAY IS THE ROADWAY WIDTH MINUS SHOULDER WIDTHS.

FOR CUT SECTION DETAILS. SEE 703.16.

## GENERAL NOTES:

FOR SECTIONS THRU BARREL, WINGS AND HEADWALLS. SEE SHEET 3 OF 3. FOR BAR SIZES, SPACING AND DIMENSIONS OF ALL REINFORCEMENT EXCEPT J5 BARS, SEE 703.17. FOR J5 BARS, SEE 703.37.

CONSTRUCTION JOINT KEY NOT SHOWN FOR CLARITY IN HALF PLANS AND ELEVATION. SEE SHEET 3 OF 3 FOR DETAILS.

DRAWING NOT TO SCALE. FOLLOW DIMENSIONS.

MINIMUM CLEARANCE TO REINFORCING STEEL SHALL BE 1½".

LAP LONGITUDINAL BARS A MINIMUM OF 23" AT SPLICES.

BEVELED HEADWALL SHALL BE LOCATED AT UPSTREAM END.

(a) SAME SIZE AND SPACING AS B2 BARS

(b) VARIES, 12" MAXIMUM

(c) J4 BAR SPACING

(d) SAME SIZE AND SPACING AS A2 BARS

(e) A2 BAR SPACING

(f) SAME SIZE AND SPACING AS A1 BARS

(g) A1 BAR SPACING

(h) FOR DESIGN FILLS OVER 2'-0"

(i) FOR DESIGN FILLS 2'-0" OR LESS

MISSOURI HIGHWAYS AND TRANSPORTATION COMMISSION
105 WEST CAPITOL
JEFFERSON CITY, MO 65102
1-888-ASK-MODOT (1-888-275-6636)

STATE OF MISSOURI
DENNIS W. HECKMAN
NUMBER PE-27141
PROFESSIONAL ENGINEER
THIS SHEET HAS BEEN SIGNED, SEALED AND DATED ELECTRONICALLY.

# CONCRETE SINGLE BOX CULVERT

SKEW: RIGHT ADVANCE
WINGS: STRAIGHT

REINFORCEMENT

DATE EFFECTIVE: 04/01/2011
DATE PREPARED: 9/8/2011

703.14H

SHEET NO. 2 OF 3

IF A SEAL IS PRESENT ON THIS SHEET IT HAS BEEN ELECTRONICALLY SEALED AND DATED.

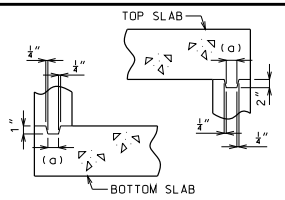


KEYED CONSTRUCTION JOINT

(a) APPROXIMATELY ONE-THIRD OF WALL THICKNESS

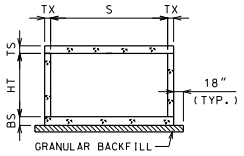


GRANULAR BACKFILL LIMITS AND MEMBER DIMENSIONS

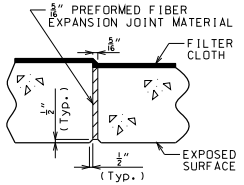


TRANSVERSE JOINT THRU BARREL

PREFORMED FIBER EXPANSION JOINT MATERIAL SHALL BE SECURELY STITCHED TO ONE FACE OF THE CONCRETE WITH NO. 10 GAGE COPPER WIRE OR NO. 12 GAGE SOFT DRAWN GALVANIZED STEEL WIRE.

FILTER CLOTH 3 FEET IN WIDTH AND DOUBLE THICKNESS SHALL BE CENTERED ON TRANSVERSE JOINTS IN TOP SLAB AND SIDEWALLS WITH EDGES SEALED WITH MASTIC OR TWO SIDED TAPE. FILTER CLOTH SHALL BE A SUBSURFACE DRAINAGE GEOTEXTILE IN ACCORDANCE WITH SECTION 1011 OF THE STANDARD SPECIFICATIONS FOR HIGHWAY CONSTRUCTION. COST OF FURNISHING AND INSTALLING FILTER CLOTH WILL BE CONSIDERED COMPLETELY COVERED BY THE CONTRACT UNIT PRICE FOR OTHER ITEMS.

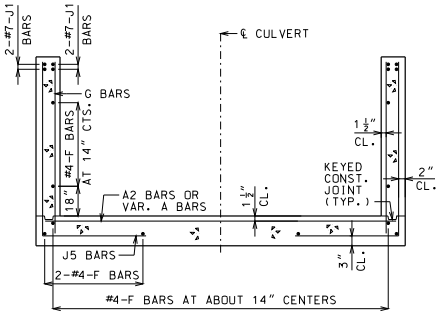


UPSTREAM AND DOWNSTREAM WINGS REINFORCEMENT

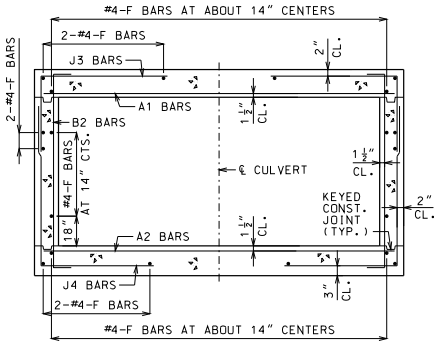


BARREL REINFORCEMENT

FOR DESIGN FILLS OVER 2'-0"

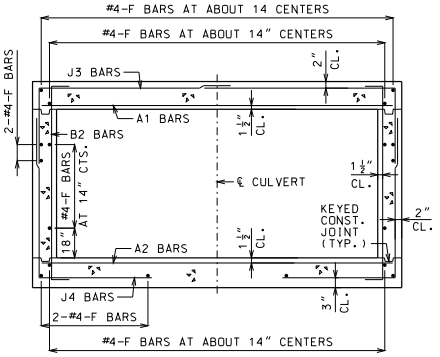


BARREL REINFORCEMENT

FOR DESIGN FILLS 2'-0" OR LESS

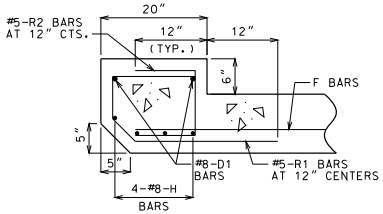


UPSTREAM HEADWALL REINFORCEMENT

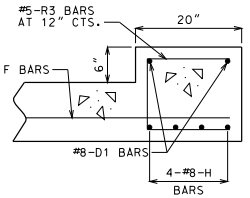


DOWNSTREAM HEADWALL REINFORCEMENT

GENERAL NOTES:

FOR MEMBER THICKNESS AND FOR BAR SIZES, SPACING AND DIMENSIONS OF ALL REINFORCEMENT EXCEPT J5 BARS, SEE 703.17. FOR J5 BARS, SEE 703.37.

BARREL AND WINGS SECTIONS ARE SYMMETRICAL ABOUT AND NORMAL TO ℄ CULVERT. HEADWALL SECTIONS ARE NORMAL TO LONG DIRECTION OF HEADWALL.

DRAWING NOT TO SCALE. FOLLOW DIMENSIONS.

MINIMUM CLEARANCE TO REINFORCING STEEL SHALL BE 1 1/2".

MISSOURI HIGHWAYS AND TRANSPORTATION COMMISSION
105 WEST CAPITOL
JEFFERSON CITY, MO 65102
1-888-ASK-MODOT (1-888-275-6636)

STATE OF MISSOURI
DENNIS W. HECKMAN
NUMBER PE-27141
PROFESSIONAL ENGINEER
THIS SHEET HAS BEEN SIGNED, SEALED AND DATED ELECTRONICALLY.

# CONCRETE SINGLE BOX CULVERT

SKEW: RIGHT ADVANCE
WINGS: STRAIGHT

SECTIONS

DATE EFFECTIVE: 04/01/2011
DATE PREPARED: 9/8/2011

703.14H

SHEET NO. 3 OF 3

IF A SEAL IS PRESENT ON THIS SHEET IT HAS BEEN ELECTRONICALLY SEALED AND DATED.

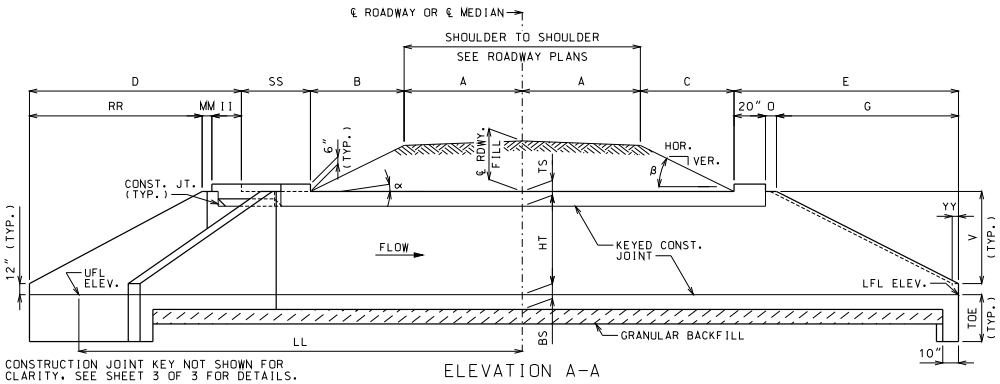


CONSTRUCTION JOINT KEY NOT SHOWN FOR CLARITY. SEE SHEET 3 OF 3 FOR DETAILS.

ELEVATION A-A

IF UNSUITABLE MATERIAL IS ENCOUNTERED, EXCAVATION OF UNSUITABLE MATERIAL AND FURNISHING AND PLACING OF GRANULAR BACKFILL SHALL BE IN ACCORDANCE WITH SECTION 206 OF THE STANDARD SPECIFICATIONS FOR HIGHWAY CONSTRUCTION.

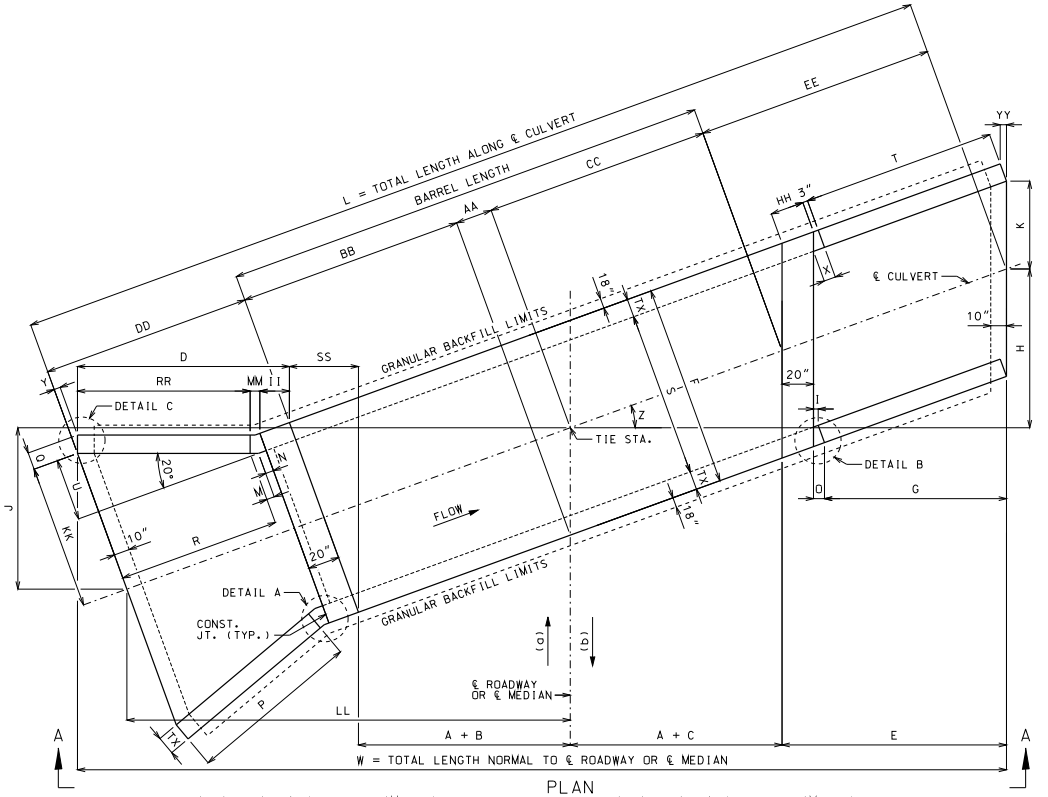


PLAN

(a) AHEAD STATION WHERE STREAM FLOWS LEFT TO RIGHT. (b) AHEAD STATION WHERE STREAM FLOWS RIGHT TO LEFT.

## EQUATIONS FOR COMPUTING $\alpha$, $\beta$, B AND C

$\alpha$ = ANGLE OF BARREL SLOPE WITH HORIZONTAL NORMAL TO ℄ ROADWAY OR ℄ MEDIAN = $\arctan\left(\frac{\text{UFL ELEV.} - \text{LFL ELEV.}}{W}\right)$

$\beta$ = ANGLE OF FILL SLOPE WITH HORIZONTAL NORMAL TO ℄ ROADWAY OR ℄ MEDIAN = $\arctan\left(\frac{\text{VER.}}{\text{HOR.}}\right)$

B = HORIZONTAL DISTANCE FROM UPSTREAM EDGE OF SHOULDER TO UPSTREAM HEADWALL NORMAL TO ℄ ROADWAY OR ℄ MEDIAN = $\frac{\text{℄ RDWY. FILL} + A(CS) - A(TAN\alpha)}{TAN\beta + TAN\alpha}$

C = HORIZONTAL DISTANCE FROM DOWNSTREAM EDGE OF SHOULDER TO DOWNSTREAM HEADWALL NORMAL TO ℄ ROADWAY OR ℄ MEDIAN = $\frac{\text{℄ RDWY. FILL} + A(CS) + A(TAN\alpha)}{TAN\beta - TAN\alpha}$

CS = CROSS SLOPE OF EACH PART OF ROADWAY INCLUDING CROWN, LANES AND SHOULDERS. CS IS POSITIVE IF RISING AND NEGATIVE IF FALLING AWAY FROM ℄ ROADWAY OR ℄ MEDIAN.

THE TERM "A(CS)" IS THE DIFFERENCE IN ELEVATION BETWEEN ℄ ROADWAY OR ℄ MEDIAN AND THE TOP OF THE FILL SLOPE NORMAL TO ℄ ROADWAY OR ℄ MEDIAN. THIS TERM SHALL BE ADJUSTED FOR UNSYMMETRICAL AND NONSTANDARD ROADWAYS.

TO ACCOUNT FOR A VARYING PROFILE GRADE THE ℄ ROADWAY FILL SHALL BE BASED ON STATIONS THAT CORRESPOND TO THE CORNERS OF THE INSIDE FACE OF THE HEADWALLS THAT PRODUCE MAXIMUM VALUES FOR B AND C.

SEE ROADWAY PLANS FOR FILL SLOPES, CROSS SLOPES, ℄ ROADWAY FILL, UPPER FLOW LINE (UFL) ELEVATION AND LOWER FLOW LINE (LFL) ELEVATION.

## LAYOUT DIMENSIONS

| VARIABLE | DIMENSION |
|---|---|
| $\alpha$ | SEE EQUATIONS |
| $\beta$ | SEE EQUATIONS |
| B | SEE EQUATIONS |
| C | SEE EQUATIONS |
| D | Z ≤ 20°: II + MM + RR |
| | Z > 20°: II + MM + RR + TT |
| E | G + O + 20" |
| F | S + 2TX |
| G | 2V |
| H | (A + C + E)(TAN Z) |
| I | 3"(COS Z) |
| J | (AA + BB + DD)(SIN Z) |
| K | (S/2)(SEC Z) |
| L | AA + BB + CC + DD + EE |

| VARIABLE | DIMENSION |
|---|---|
| M | N(COS 20°) |
| N | 3" + TX(TAN 10°) |
| O | I + YY |
| P | 2V[SEC(Z + 20°)] |
| Q | TX(COS 20°) |
| R | P(COS 20°) |
| T | G(SEC Z) |
| U | (R + M)(TAN 20°) |
| V | HT + TS - 12" |
| W | 2A + B + C + D + E + SS |
| X | 3" + TX(TAN Z) |
| Y | TX(SIN 20°) |
| Z | SKEW ANGLE |
| AA | (F/2)(TAN Z) |

| VARIABLE | DIMENSION |
|---|---|
| BB | (A + B)(SEC Z) |
| CC | (A + C)(SEC Z) |
| DD | R + M + N + 20" |
| EE | E(SEC Z) |
| HH | 20"(SEC Z) |
| II | 20"(COS Z) |
| KK | (S/2) + U |
| LL | (AA + BB + DD)(COS Z) |
| MM | 3"[COS Z + COS(Z - 20°)] |
| RR | P [COS (Z - 20°)] |
| SS | F(SIN Z) |
| TT | TX[SIN(Z - 20°)] |
| YY | TX(SIN Z) |
| TOE | MAX{(BS + 12"), 40"} |

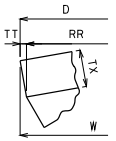


DETAIL C
For Z > 20°

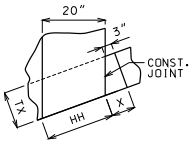


DETAIL B

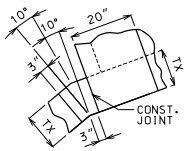


DETAIL A

## GENERAL NOTES:

DESIGN SPECIFICATIONS: 2010 AASHTO LRFD BRIDGE DESIGN SPECFICATIONS AND 2010 INTERIM REVISIONS

DESIGN UNIT STRESSES: CLASS B-1 CONCRETE f'c = 4,000 PSI
REINFORCING STEEL (GRADE 60) fy = 60,000 PSI

DESIGN LOADS: VEHICULAR = HL-93 MINUS LANE LOAD
EARTH = 120 LB/FT³
EQUIVALENT FLUID PRESSURE = 30 LB/FT³ (MIN.) - 60 LB/FT³ (MAX.)

FOR REINFORCEMENT DETAILS, SEE SHEET 2 OF 3. FOR SECTION DETAILS, SEE SHEET 3 OF 3. FOR MEMBER THICKNESS, SEE 703.17.

DRAWING NOT TO SCALE. FOLLOW DIMENSIONS.

DIMENSIONS ARE IN INCHES UNLESS OTHERWISE NOTED.

WHEN ALTERNATE PRECAST CONCRETE BOX CULVERT SECTIONS ARE USED, THE MINIMUM DISTANCE FROM INSIDE FACE OF HEADWALLS TO PRECAST SECTIONS MEASURED ALONG THE SHORTEST WALL SHALL BE 3 FEET. REINFORCEMENT AND DIMENSIONS FOR WINGS AND HEADWALLS SHALL BE IN ACCORDANCE WITH MISSOURI STANDARD PLANS.


MISSOURI HIGHWAYS AND TRANSPORTATION COMMISSION
105 WEST CAPITOL
JEFFERSON CITY, MO 65102
1-888-ASK-MODOT (1-888-275-6636)


STATE OF MISSOURI
DENNIS W. HECKMAN
NUMBER PE-27141
PROFESSIONAL ENGINEER
THIS SHEET HAS BEEN SIGNED, SEALED AND DATED ELECTRONICALLY.

# CONCRETE SINGLE BOX CULVERT

SKEW: RIGHT ADVANCE
WINGS: FLARED

LAYOUT

DATE EFFECTIVE: 04/01/2011
DATE PREPARED: 9/8/2011

703.15D

SHEET NO. 1 OF 3

IF A SEAL IS PRESENT ON THIS SHEET IT HAS BEEN ELECTRONICALLY SEALED AND DATED.

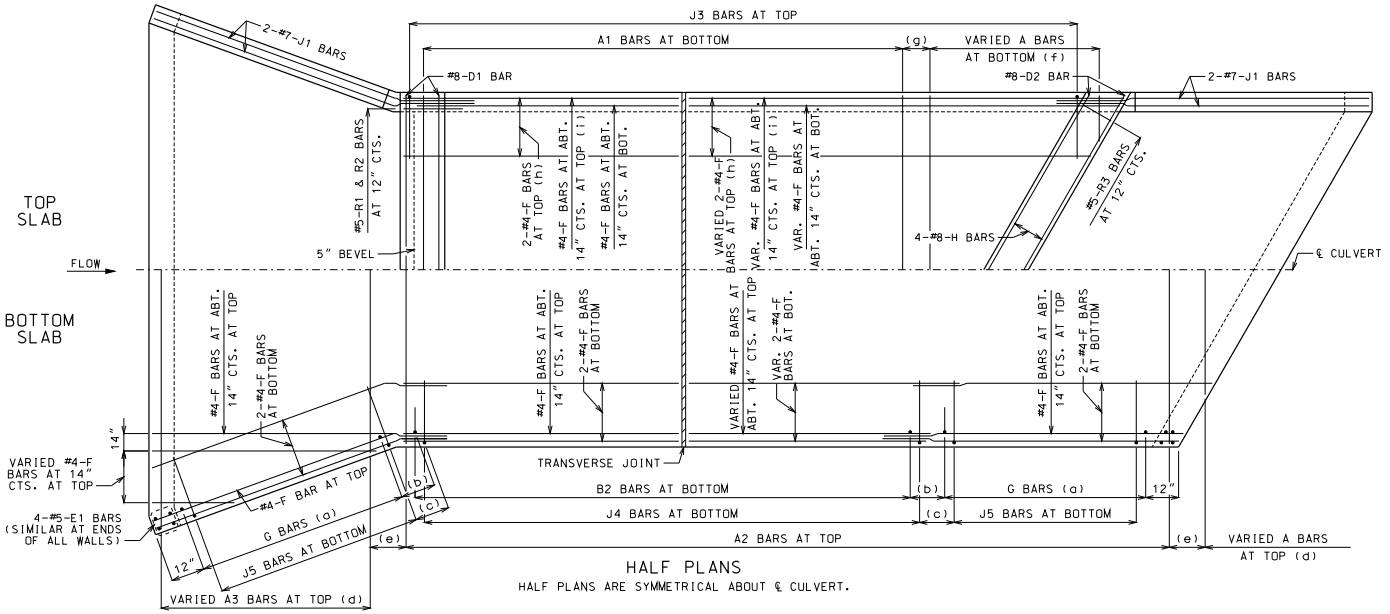


HALF PLANS

HALF PLANS ARE SYMMETRICAL ABOUT ℄ CULVERT.

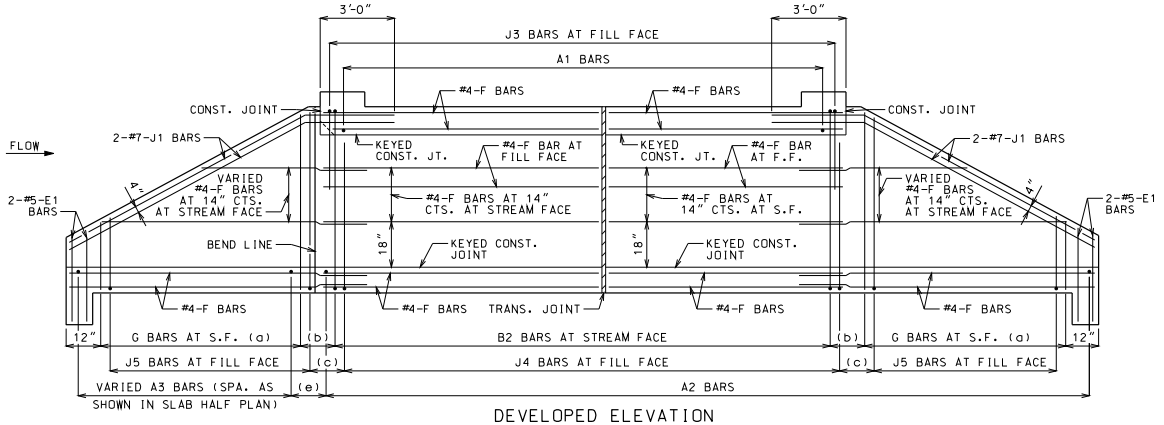


DEVELOPED ELEVATION

J1 BARS MAY BE BENT IN FIELD OR SHOP.

## LAYING OUT TRANVERSE JOINTS

UNLESS SHOWN ON ROADWAY OR BRIDGE PLANS

USE A TRANSVERSE JOINT WHEN BARREL LENGTH IS OVER 80 FEET. USE ADDITIONAL JOINTS TO LIMIT CUT SECTION LENGTH AND END SECTION BARREL LENGTH MEASURED ALONG CENTERLINE OF CULVERT TO 50 FEET.

MINIMUM END SECTION LENGTH SHALL BE 3 FEET MEASURED ALONG THE SHORTEST WALL FROM THE INSIDE FACE OF HEADWALL TO THE TRANSVERSE JOINT.

TO AVOID LOCATING TRANSVERSE JOINTS UNDER A TRAVELED WAY WITH DESIGN FILLS 2 FEET OR LESS THE FOLLOWING SHALL APPLY:

BARREL LENGTH UP TO 90 FEET WITHOUT A TRANSVERSE JOINT

CUT SECTION LENGTHS UP TO 60 FEET

WHEN BARREL AND CUT SECTION LENGTH RESTRICTIONS REQUIRE TRANSVERSE JOINTS TO BE LOCATED UNDER A TRAVELED WAY WITH DESIGN FILLS 2 FEET OR LESS, THE JOINTS SHALL BE LOCATED TO MINIMIZE THE LENGTH OF JOINT UNDER THE TRAVELED WAY.

TRAVELED WAY IS THE ROADWAY WIDTH MINUS SHOULDER WIDTHS.

FOR CUT SECTION DETAILS, SEE 703.16.

## GENERAL NOTES:

FOR SECTIONS THRU BARREL, WINGS AND HEADWALLS, SEE SHEET 3 OF 3. FOR BAR SIZES, SPACING AND DIMENSIONS OF ALL REINFORCEMENT EXCEPT J5 BARS, SEE 703.17. FOR J5 BARS, SEE 703.37.

CONSTRUCTION JOINT KEY NOT SHOWN FOR CLARITY IN HALF PLANS AND ELEVATION. SEE SHEET 3 OF 3 FOR DETAILS.

DRAWING NOT TO SCALE. FOLLOW DIMENSIONS.

MINIMUM CLEARANCE TO REINFORCING STEEL SHALL BE 1½".

LAP LONGITUDINAL BARS A MINIMUM OF 23" AT SPLICES.

BEVELED HEADWALL SHALL BE LOCATED AT UPSTREAM END.

(a) SAME SIZE AND SPACING AS B2 BARS

(b) VARIES, 12" MAXIMUM

(c) J4 BAR SPACING

(d) SAME SIZE AND SPACING AS A2 BARS

(e) A2 BAR SPACING

(f) SAME SIZE AND SPACING AS A1 BARS

(g) A1 BAR SPACING

(h) FOR DESIGN FILLS OVER 2'-0"

(i) FOR DESIGN FILLS 2'-0" OR LESS

MISSOURI HIGHWAYS AND TRANSPORTATION COMMISSION
105 WEST CAPITOL
JEFFERSON CITY, MO 65102
1-888-ASK-MODOT (1-888-275-6636)

STATE OF MISSOURI
DENNIS W. HECKMAN
NUMBER PE-27141
PROFESSIONAL ENGINEER
THIS SHEET HAS BEEN SIGNED, SEALED AND DATED ELECTRONICALLY.

# CONCRETE SINGLE BOX CULVERT

SKEW: RIGHT ADVANCE
WINGS: FLARED

REINFORCEMENT

DATE EFFECTIVE: 04/01/2011
DATE PREPARED: 9/8/2011

703.15D

SHEET NO. 2 OF 3

IF A SEAL IS PRESENT ON THIS SHEET IT HAS BEEN ELECTRONICALLY SEALED AND DATED.

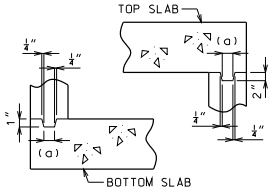


KEYED CONSTRUCTION JOINT

(a) APPROXIMATELY ONE-THIRD OF WALL THICKNESS

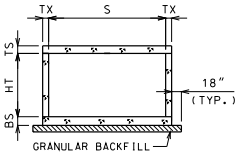


GRANULAR BACKFILL LIMITS AND MEMBER DIMENSIONS

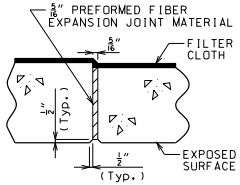


TRANSVERSE JOINT THRU BARREL

PREFORMED FIBER EXPANSION JOINT MATERIAL SHALL BE SECURELY STITCHED TO ONE FACE OF THE CONCRETE WITH NO. 10 GAGE COPPER WIRE OR NO. 12 GAGE SOFT DRAWN GALVANIZED STEEL WIRE.

FILTER CLOTH 3 FEET IN WIDTH AND DOUBLE THICKNESS SHALL BE CENTERED ON TRANSVERSE JOINTS IN TOP SLAB AND SIDEWALLS WITH EDGES SEALED WITH MASTIC OR TWO SIDED TAPE. FILTER CLOTH SHALL BE A SUBSURFACE DRAINAGE GEOTEXTILE IN ACCORDANCE WITH SECTION 1011 OF THE STANDARD SPECIFICATIONS FOR HIGHWAY CONSTRUCTION. COST OF FURNISHING AND INSTALLING FILTER CLOTH WILL BE CONSIDERED COMPLETELY COVERED BY THE CONTRACT UNIT PRICE FOR OTHER ITEMS.

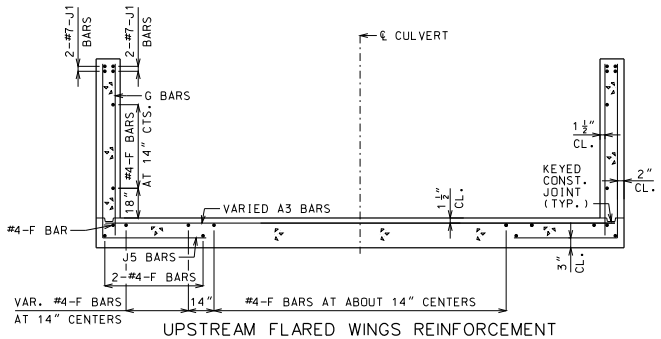


UPSTREAM FLARED WINGS REINFORCEMENT

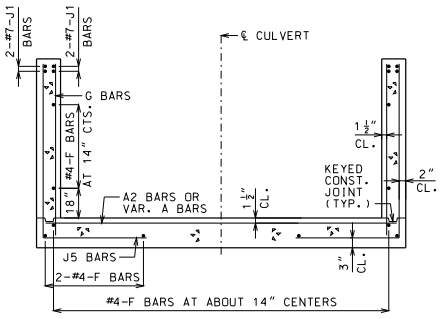


DOWNSTREAM WINGS REINFORCEMENT

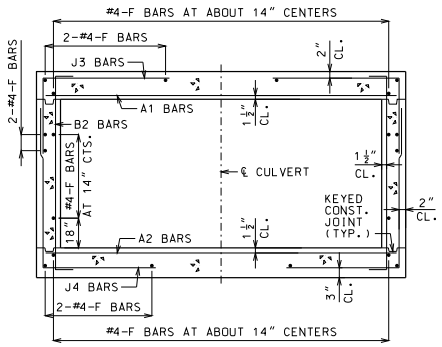


BARREL REINFORCEMENT

FOR DESIGN FILLS OVER 2'-0"

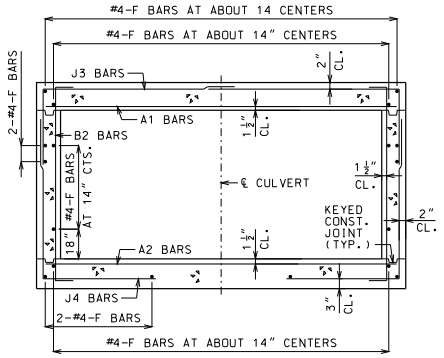


BARREL REINFORCEMENT

FOR DESIGN FILLS 2'-0" OR LESS

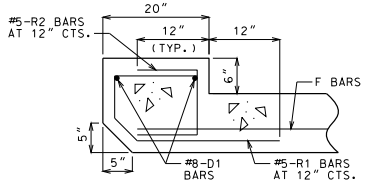


UPSTREAM HEADWALL REINFORCEMENT

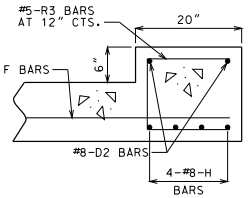


DOWNSTREAM HEADWALL REINFORCEMENT

GENERAL NOTES:

FOR MEMBER THICKNESS AND FOR BAR SIZES, SPACING AND DIMENSIONS OF ALL REINFORCEMENT EXCEPT J5 BARS, SEE 703.17. FOR J5 BARS, SEE 703.37.

BARREL AND WINGS SECTIONS ARE SYMMETRICAL ABOUT AND NORMAL TO ℄ CULVERT. HEADWALL SECTIONS ARE NORMAL TO LONG DIRECTION OF HEADWALL.

DRAWING NOT TO SCALE. FOLLOW DIMENSIONS.

MINIMUM CLEARANCE TO REINFORCING STEEL SHALL BE 1½".

MISSOURI HIGHWAYS AND TRANSPORTATION COMMISSION
105 WEST CAPITOL
JEFFERSON CITY, MO 65102
1-888-ASK-MODOT (1-888-275-6636)

STATE OF MISSOURI
DENNIS W. HECKMAN
NUMBER PE-27141
PROFESSIONAL ENGINEER
THIS SHEET HAS BEEN SIGNED, SEALED AND DATED ELECTRONICALLY.

# CONCRETE SINGLE BOX CULVERT

SKEW: RIGHT ADVANCE
WINGS: FLARED

SECTIONS

DATE EFFECTIVE: 04/01/2011
DATE PREPARED: 9/8/2011

703.15D

SHEET NO. 3 OF 3

IF A SEAL IS PRESENT ON THIS SHEET IT HAS BEEN ELECTRONICALLY SEALED AND DATED.

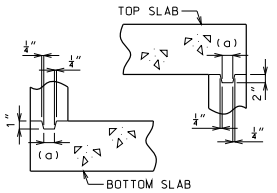


KEYED CONSTRUCTION JOINT

(a) APPROXIMATELY ONE-THIRD OF WALL THICKNESS

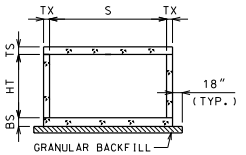


GRANULAR BACKFILL LIMITS AND MEMBER DIMENSIONS

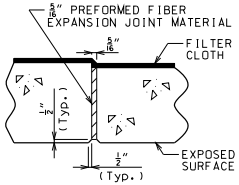


TRANSVERSE JOINT THRU BARREL

PREFORMED FIBER EXPANSION JOINT MATERIAL SHALL BE SECURELY STITCHED TO ONE FACE OF THE CONCRETE WITH NO. 10 GAGE COPPER WIRE OR NO. 12 GAGE SOFT DRAWN GALVANIZED STEEL WIRE.

FILTER CLOTH 3 FEET IN WIDTH AND DOUBLE THICKNESS SHALL BE CENTERED ON TRANSVERSE JOINTS IN TOP SLAB AND SIDEWALLS WITH EDGES SEALED WITH MASTIC OR TWO SIDED TAPE. FILTER CLOTH SHALL BE A SUBSURFACE DRAINAGE GEOTEXTILE IN ACCORDANCE WITH SECTION 1011 OF THE STANDARD SPECIFICATIONS FOR HIGHWAY CONSTRUCTION. COST OF FURNISHING AND INSTALLING FILTER CLOTH WILL BE CONSIDERED COMPLETELY COVERED BY THE CONTRACT UNIT PRICE FOR OTHER ITEMS.

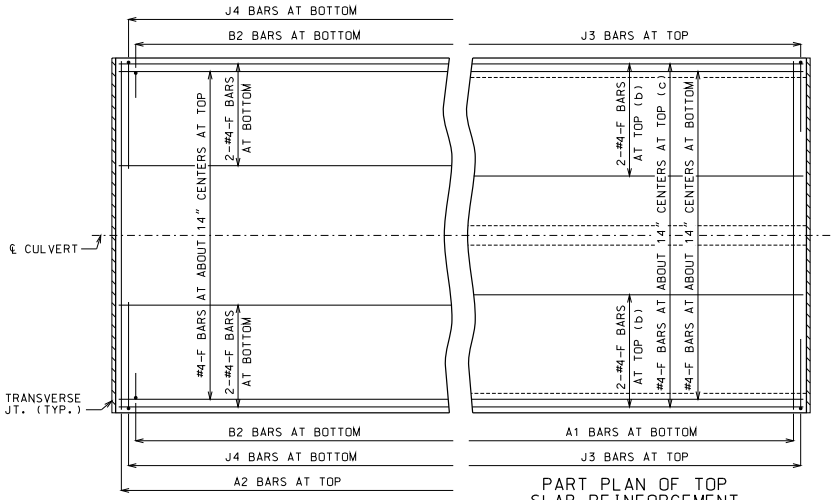


PART PLAN OF BOTTOM SLAB REINFORCEMENT

PART PLAN OF TOP SLAB REINFORCEMENT

(b) FOR DESIGN FILLS OVER 2'-0"
(c) FOR DESIGN FILLS 2'-0" OR LESS

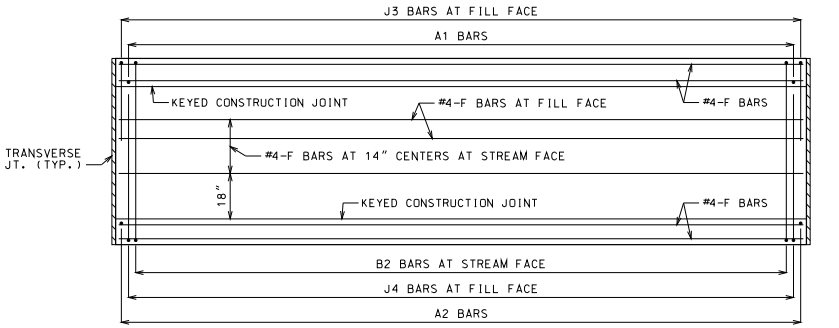


ELEVATION OF WALL REINFORCEMENT

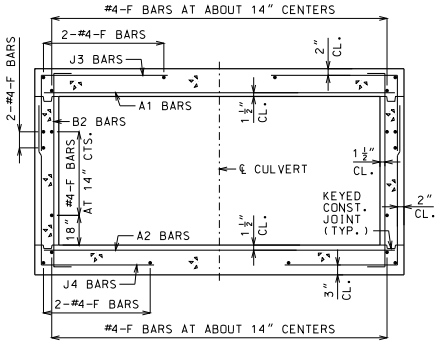


BARREL REINFORCEMENT

FOR DESIGN FILLS OVER 2'-0"
SYMMETRICAL ABOUT AND NORMAL TO ℄ CULVERT.

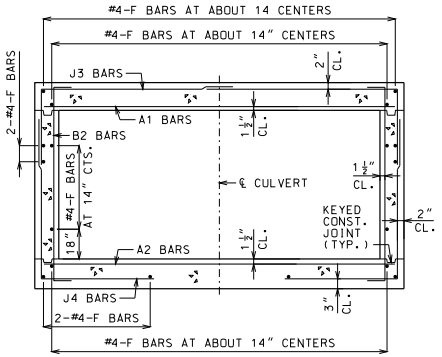


BARREL REINFORCEMENT

FOR DESIGN FILLS 2'-0" OR LESS
SYMMETRICAL ABOUT AND NORMAL TO ℄ CULVERT.

## GENERAL NOTES

DESIGN SPECIFICATIONS: 2010 AASHTO LRFD BRIDGE DESIGN SPECFICATIONS AND 2010 INTERIM REVISIONS

DESIGN UNIT STRESSES: CLASS B-1 CONCRETE f'c = 4,000 PSI
REINFORCING STEEL (GRADE 60) fy = 60,000 PSI

DESIGN LOADS: VEHICULAR = HL-93 MINUS LANE LOAD
EARTH = 120 LB/FT³
EQUIVALENT FLUID PRESSURE = 30 LB/FT³ (MIN.) - 60 LB/FT³ (MAX.)

FOR MEMBER THICKNESS AND FOR BAR SIZES, SPACING AND DIMENSIONS, SEE 703.17.

CONSTRUCTION JOINT KEY NOT SHOWN FOR CLARITY IN PART PLANS AND ELEVATION.

DRAWING NOT TO SCALE. FOLLOW DIMENSIONS.

MINIMUM CLEARANCE TO REINFORCING STEEL SHALL BE 1½".

IF A SEAL IS PRESENT ON THIS SHEET IT HAS BEEN ELECTRONICALLY SEALED AND DATED.

MISSOURI HIGHWAYS AND TRANSPORTATION COMMISSION
105 WEST CAPITOL
JEFFERSON CITY, MO 65102
1-888-ASK-MODOT (1-888-275-6636)

STATE OF MISSOURI
DENNIS W. HECKMAN
NUMBER PE-27141
PROFESSIONAL ENGINEER
THIS SHEET HAS BEEN SIGNED, SEALED AND DATED ELECTRONICALLY.

# CONCRETE SINGLE BOX CULVERT

CUT SECTION

DATE EFFECTIVE: 04/01/2011
DATE PREPARED: 9/8/2011

703.16

SHEET NO. 1 OF 1

| SPAN (S) = 3 FT HEIGHT (HT) = 2 FT OR 3 FT | | | | | | | | | | | | | | | | | | | | |
|---|---|---|---|---|---|---|---|---|---|---|---|---|---|---|---|---|---|---|---|---|
| DESIGN FILL | MEMBER THICKNESS | | | TOP SLAB BARS | | | | | | | BOTTOM SLAB BARS | | | | | | | | WALL BARS | | |
| | | | | A1 BARS | | J3 BARS | | | | | A2 BARS | | J4 BARS | | | | | | B2 BARS | | |
| | TS | BS | TX | SIZE | SPA. | SIZE | SPA. | C1 | K2 | | SIZE | SPA. | SIZE | SPA. | C4 | K3 | | SIZE | SPA. | G1 |
| | | | | | | | | | HT=2′ | HT=3′ | | | | | | HT=2′ | HT=3′ | | | |
| 1 FT | 9 | 8 | 8 | 4 | 7 | 4 | 12 | 32.5 | 25.3 | 33.6 | 4 | 11.5 | 4 | 12 | 32.5 | 28 | 40 | 5 | 12 | 12 |
| 2 FT | 9 | 8 | 8 | 4 | 7 | 4 | 12 | 32.5 | 25.3 | 33.6 | 4 | 11.5 | 4 | 12 | 30.8 | 28 | 40 | 5 | 12 | 12 |
| 4 FT | 8 | 8 | 8 | 4 | 12 | 4 | 12 | 26.4 | 24.1 | 32.4 | 4 | 12 | 4 | 12 | 26.0 | 28 | 40 | 5 | 12 | 0 |
| 6 FT | 8 | 8 | 8 | 4 | 12 | 4 | 12 | 24.6 | 24.1 | 32.4 | 4 | 12 | 4 | 12 | 24.6 | 28 | 40 | 5 | 12 | 0 |
| 8 FT | 8 | 8 | 8 | 4 | 12 | 4 | 12 | 23.8 | 24.1 | 32.4 | 4 | 12 | 4 | 12 | 23.8 | 28 | 40 | 5 | 12 | 0 |
| 10 FT | 8 | 8 | 8 | 4 | 12 | 4 | 12 | 22.0 | 24.1 | 32.4 | 4 | 12 | 4 | 12 | 22.0 | 28 | 40 | 5 | 12 | 0 |
| 12 FT | 8 | 8 | 8 | 4 | 12 | 4 | 12 | 22.0 | 24.1 | 32.4 | 4 | 12 | 4 | 12 | 22.0 | 28 | 40 | 5 | 12 | 0 |
| 14 FT | 8 | 8 | 8 | 4 | 12 | 4 | 12 | 22.0 | 24.1 | 32.4 | 4 | 12 | 4 | 12 | 22.0 | 28 | 40 | 5 | 12 | 0 |
| 16 FT | 8 | 8 | 8 | 4 | 12 | 4 | 12 | 22.0 | 24.1 | 32.4 | 4 | 12 | 4 | 12 | 22.0 | 28 | 40 | 5 | 12 | 0 |
| 18 FT | 8 | 8 | 8 | 4 | 12 | 4 | 12 | 22.0 | 24.1 | 32.4 | 4 | 12 | 4 | 12 | 22.0 | 28 | 40 | 5 | 12 | 0 |
| 20 FT | 8 | 8 | 8 | 4 | 12 | 4 | 12 | 22.0 | 24.1 | 32.4 | 4 | 11 | 4 | 12 | 22.0 | 28 | 40 | 5 | 12 | 0 |
| 22 FT | 8 | 8 | 8 | 4 | 11.5 | 4 | 12 | 22.0 | 24.1 | 32.4 | 4 | 10 | 4 | 12 | 22.0 | 28 | 40 | 5 | 12 | 0 |
| 24 FT | 8 | 8 | 8 | 4 | 10.5 | 4 | 12 | 22.0 | 24.1 | 32.4 | 4 | 9 | 4 | 12 | 22.0 | 28 | 40 | 5 | 12 | 0 |
| 26 FT | 8 | 8 | 8 | 4 | 9.5 | 4 | 12 | 22.0 | 24.1 | 32.4 | 4 | 8.5 | 4 | 11.5 | 22.0 | 28 | 40 | 5 | 12 | 0 |
| 28 FT | 8 | 8 | 8 | 4 | 9 | 4 | 11.5 | 22.0 | 24.1 | 32.4 | 4 | 8 | 4 | 10.5 | 22.0 | 28 | 40 | 5 | 12 | 0 |
| 30 FT | 8 | 8 | 8 | 4 | 8.5 | 4 | 11 | 22.0 | 24.1 | 32.4 | 4 | 7.5 | 4 | 10 | 22.0 | 28 | 40 | 5 | 12 | 0 |
| 32 FT | 8 | 8 | 8 | 4 | 8 | 4 | 10 | 22.0 | 24.1 | 32.4 | 4 | 7 | 4 | 9.5 | 22.0 | 28 | 40 | 5 | 12 | 0 |
| 34 FT | 8 | 8 | 8 | 4 | 7.5 | 4 | 9.5 | 22.0 | 24.1 | 32.4 | 4 | 6.5 | 4 | 8.5 | 22.0 | 28 | 40 | 5 | 12 | 0 |
| 36 FT | 8 | 8 | 8 | 4 | 7 | 4 | 9 | 22.0 | 24.1 | 32.4 | 4 | 6 | 4 | 8 | 22.0 | 28 | 40 | 5 | 12 | 0 |
| 38 FT | 8 | 8 | 8 | 4 | 6.5 | 4 | 8.5 | 22.0 | 24.1 | 32.4 | 5 | 9 | 4 | 8 | 22.0 | 28 | 40 | 5 | 12 | 0 |
| 40 FT | 8 | 9 | 8 | 4 | 6.5 | 4 | 8 | 22.0 | 24.1 | 32.1 | 4 | 6 | 4 | 11 | 21.5 | 29 | 41 | 5 | 12 | 0 |
| 42 FT | 8 | 9 | 8 | 4 | 6 | 4 | 8 | 22.0 | 24.1 | 32.1 | 5 | 9 | 4 | 10 | 21.5 | 29 | 41 | 5 | 12 | 0 |
| 44 FT | 8 | 9 | 8 | 4 | 6 | 4 | 7.5 | 22.0 | 24.1 | 32.1 | 5 | 8.5 | 4 | 10 | 21.5 | 29 | 41 | 5 | 12 | 0 |
| 46 FT | 8 | 9 | 8 | 4 | 6 | 4 | 7 | 22.0 | 24.1 | 32.1 | 5 | 8 | 4 | 9.5 | 21.5 | 29 | 41 | 5 | 12 | 0 |
| 48 FT | 8 | 10 | 8 | 4 | 6 | 4 | 7 | 22.0 | 24.0 | 31.9 | 5 | 8.5 | 4 | 12 | 21.5 | 30 | 42 | 5 | 12 | 0 |
| 50 FT | 8 | 10 | 8 | 4 | 6 | 4 | 6.5 | 22.0 | 24.0 | 31.9 | 5 | 8 | 4 | 12 | 21.5 | 30 | 42 | 5 | 12 | 0 |

| SPAN (S) = 3 FT HEIGHT (HT) = 4 FT OR 5 FT | | | | | | | | | | | | | | | | | | | | |
|---|---|---|---|---|---|---|---|---|---|---|---|---|---|---|---|---|---|---|---|---|
| DESIGN FILL | MEMBER THICKNESS | | | TOP SLAB BARS | | | | | | | BOTTOM SLAB BARS | | | | | | | | WALL BARS | | |
| | | | | A1 BARS | | J3 BARS | | | | | A2 BARS | | J4 BARS | | | | | | B2 BARS | | |
| | TS | BS | TX | SIZE | SPA. | SIZE | SPA. | C1 | K2 | | SIZE | SPA. | SIZE | SPA. | C4 | K3 | | SIZE | SPA. | G1 |
| | | | | | | | | | HT=4′ | HT=5′ | | | | | | HT=4′ | HT=5′ | | | |
| 1 FT | 9 | 8 | 8 | 4 | 6.5 | 4 | 12 | 32.5 | 25.3 | 30.3 | 4 | 10.5 | 4 | 12 | 32.5 | 52 | 64 | 5 | 12 | 12 |
| 2 FT | 9 | 8 | 8 | 4 | 6.5 | 4 | 12 | 32.5 | 25.3 | 30.3 | 4 | 10 | 4 | 12 | 32.5 | 52 | 64 | 5 | 12 | 12 |
| 4 FT | 8 | 8 | 8 | 4 | 12 | 4 | 12 | 32.5 | 24.3 | 29.1 | 4 | 12 | 4 | 12 | 32.5 | 52 | 64 | 5 | 12 | 0 |
| 6 FT | 8 | 8 | 8 | 4 | 12 | 4 | 12 | 36.1 | 24.3 | 29.1 | 4 | 12 | 4 | 12 | 33.5 | 52 | 64 | 5 | 12 | 0 |
| 8 FT | 8 | 8 | 8 | 4 | 12 | 4 | 12 | 32.5 | 24.3 | 29.1 | 4 | 12 | 4 | 12 | 32.5 | 52 | 64 | 5 | 12 | 0 |
| 10 FT | 8 | 8 | 8 | 4 | 12 | 4 | 12 | 32.5 | 24.3 | 29.1 | 4 | 12 | 4 | 12 | 32.5 | 52 | 64 | 5 | 12 | 0 |
| 12 FT | 8 | 8 | 8 | 4 | 12 | 4 | 12 | 35.6 | 24.3 | 29.1 | 4 | 12 | 4 | 12 | 32.5 | 52 | 64 | 5 | 12 | 0 |
| 14 FT | 8 | 8 | 8 | 4 | 12 | 4 | 12 | 34.4 | 24.3 | 29.1 | 4 | 12 | 4 | 11.5 | 36.1 | 52 | 64 | 5 | 12 | 0 |
| 16 FT | 8 | 8 | 8 | 4 | 12 | 4 | 12 | 33.5 | 24.3 | 29.1 | 4 | 12 | 4 | 11 | 35.3 | 52 | 64 | 5 | 12 | 0 |
| 18 FT | 8 | 8 | 8 | 4 | 12 | 4 | 12 | 32.5 | 24.3 | 29.1 | 4 | 12 | 4 | 10.5 | 34.8 | 52 | 64 | 5 | 12 | 0 |
| 20 FT | 8 | 8 | 8 | 4 | 12 | 4 | 12 | 31.6 | 24.3 | 29.1 | 4 | 10.5 | 4 | 10 | 34.4 | 52 | 64 | 5 | 12 | 0 |
| 22 FT | 8 | 8 | 8 | 4 | 11.5 | 4 | 11 | 31.6 | 24.3 | 29.1 | 4 | 9.5 | 4 | 9.5 | 33.9 | 52 | 64 | 5 | 12 | 0 |
| 24 FT | 8 | 8 | 8 | 4 | 10.5 | 4 | 10 | 31.6 | 24.3 | 29.1 | 4 | 9 | 4 | 9 | 33.9 | 52 | 64 | 5 | 12 | 0 |
| 26 FT | 8 | 8 | 8 | 4 | 9.5 | 4 | 9.5 | 31.3 | 24.3 | 29.1 | 4 | 8.5 | 4 | 8 | 33.5 | 52 | 64 | 5 | 12 | 0 |
| 28 FT | 8 | 8 | 8 | 4 | 9 | 4 | 8.5 | 31.3 | 24.3 | 29.1 | 4 | 7.5 | 4 | 7.5 | 33.0 | 52 | 64 | 5 | 12 | 0 |
| 30 FT | 8 | 8 | 8 | 4 | 8.5 | 4 | 8 | 31.3 | 24.3 | 29.1 | 4 | 7 | 4 | 7 | 33.0 | 52 | 64 | 5 | 12 | 0 |
| 32 FT | 8 | 8 | 8 | 4 | 8 | 4 | 7.5 | 30.8 | 24.3 | 29.1 | 4 | 7 | 4 | 6.5 | 33.0 | 52 | 64 | 5 | 12 | 0 |
| 34 FT | 8 | 8 | 8 | 4 | 7.5 | 4 | 7 | 30.8 | 24.3 | 29.1 | 4 | 6.5 | 4 | 6.5 | 32.5 | 52 | 64 | 5 | 12 | 0 |
| 36 FT | 8 | 8 | 8 | 4 | 7 | 4 | 7 | 30.8 | 24.3 | 29.1 | 4 | 6 | 4 | 6 | 32.5 | 52 | 64 | 5 | 12 | 0 |
| 38 FT | 8 | 8 | 8 | 4 | 6.5 | 4 | 6.5 | 30.8 | 24.3 | 29.1 | 5 | 9 | 5 | 7 | 32.5 | 52 | 64 | 5 | 12 | 0 |
| 40 FT | 8 | 9 | 8 | 4 | 6.5 | 4 | 6 | 30.8 | 24.0 | 28.8 | 4 | 6 | 4 | 6.5 | 32.5 | 53 | 65 | 5 | 12 | 0 |
| 42 FT | 8 | 9 | 8 | 4 | 6 | 4 | 6 | 30.8 | 24.0 | 28.8 | 5 | 9 | 4 | 6 | 32.5 | 53 | 65 | 5 | 11.5 | 0 |
| 44 FT | 8 | 9 | 8 | 4 | 6 | 5 | 6.5 | 30.8 | 24.0 | 28.8 | 5 | 8.5 | 4 | 6 | 32.5 | 53 | 65 | 5 | 11 | 0 |
| 46 FT | 8 | 9 | 8 | 4 | 6 | 5 | 6.5 | 30.4 | 24.0 | 28.8 | 5 | 8 | 5 | 6.5 | 34.8 | 53 | 65 | 5 | 10.5 | 0 |
| 48 FT | 8 | 9 | 8 | 4 | 6 | 5 | 6 | 30.4 | 24.0 | 28.8 | 5 | 8 | 5 | 6.5 | 34.8 | 53 | 65 | 5 | 10 | 0 |
| 50 FT | 8 | 9 | 8 | 4 | 6 | 5 | 6 | 30.4 | 24.0 | 28.8 | 5 | 7.5 | 5 | 6 | 34.8 | 53 | 65 | 5 | 9.5 | 0 |

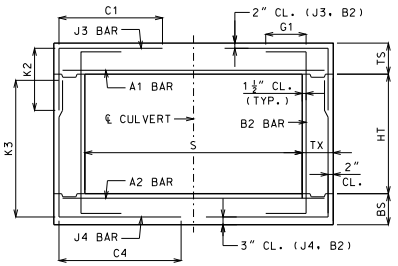


BAR DIMENSIONS DIAGRAM
SYMMETRICAL ABOUT ℄ CULVERT.

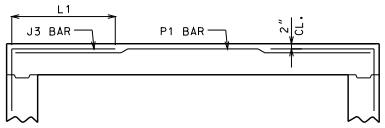


ALTERNATE J3 BAR

AT CONTRACTOR'S OPTION, ALTERNATE J3 BARS MAY BE USED WHEN THE DISTANCE BETWEEN THE ENDS OF J3 BARS IN THE TOP SLAB IS LESS THAN 2'-0". DIMENSION L1 (NOT C1) SHALL BE USED WITH ALTERNATE J3 BARS. WHERE L1 IS EQUAL TO 18", 22" AND 28" FOR #4, #5 AND #6 BARS, RESPECTIVELY. ADDITIONAL P1 BARS ARE REQUIRED WITH ALTERNATE J3 BARS WITH A LENGTH EQUAL TO A1 BARS, AND SIZE AND SPACING EQUAL TO J3 BARS. NO ADDITIONAL PAYMENT WILL BE MADE FOR THIS SUBSTITUTION.

GENERAL NOTES:

IF DESIGN FILL IS BETWEEN TABULATED DESIGN FILLS, USE THE NEXT GREATER TABULATED DESIGN FILL, EXCEPT FOR DESIGN FILLS BETWEEN 2 FEET AND 4 FEET. FOR DESIGN FILLS BETWEEN 2 FEET AND 4 FEET USE THE GREATER MEMBER THICKNESS, AREA OF REINFORCEMENT AND BAR DIMENSIONS FROM THE 2 FEET AND 4 FEET TABULATED DESIGN FILLS. AREA OF REINFORCEMENT EQUALS BAR AREA PER FOOT SPACING.

SPECIAL DESIGNS ARE REQUIRED WHEN THE DESIGN FILL IS LESS THAN 1 FOOT OR GREATER THAN 50 FEET.

DIMENSIONS ARE IN INCHES UNLESS OTHERWISE SPECIFIED.

DESIGN FILLS ARE MEASURED FROM THE TOP OF TOP SLAB TO THE TOP OF EARTH FILL OR ROADWAY.

CULVERTS MEET STRENGTH AND SERVICEABILITY REQUIREMENTS FOR THE DESIGN VEHICULAR LIVE LOAD HL-93 MINUS THE LANE LOAD.


MISSOURI HIGHWAYS AND TRANSPORTATION COMMISSION
105 WEST CAPITOL
JEFFERSON CITY, MO 65102
1-888-ASK-MODOT (1-888-275-6636)


STATE OF MISSOURI
DENNIS W. HECKMAN
NUMBER PE-27141
PROFESSIONAL ENGINEER
THIS SHEET HAS BEEN SIGNED, SEALED AND DATED ELECTRONICALLY.

# CONCRETE SINGLE BOX CULVERT

MEMBER THICKNESS
BAR SIZE, SPACING & DIMENSIONS

SPAN (S): 3 FEET
HEIGHT (HT): 2 THRU 5 FEET

DATE EFFECTIVE: 04/01/2011
DATE PREPARED: 4/18/2011

703.17

SHEET NO.
1 OF 14

IF A SEAL IS PRESENT ON THIS SHEET IT HAS BEEN ELECTRONICALLY SEALED AND DATED.

| SPAN (S) = 4 FT HEIGHT (HT) = 2 FT OR 3 FT | | | | | | | | | | | | | | | | | | | |
|---|---|---|---|---|---|---|---|---|---|---|---|---|---|---|---|---|---|---|---|
| DESIGN FILL | MEMBER THICKNESS | | | TOP SLAB BARS | | | | | | | BOTTOM SLAB BARS | | | | | | | | WALL BARS |
| | | | | A1 BARS | | J3 BARS | | | | | A2 BARS | | J4 BARS | | | | | B2 BARS | |
| | TS | BS | TX | SIZE | SPA. | SIZE | SPA. | C1 | K2 HT=2' | K2 HT=3' | SIZE | SPA. | SIZE | SPA. | C4 | K3 HT=2' | K3 HT=3' | SIZE | SPA. | G1 |
| 1 FT | 10 | 8 | 8 | 4 | 6 | 4 | 10.5 | 38.6 | 26.3 | 34.8 | 4 | 7 | 4 | 7 | 30.3 | 28 | 40 | 5 | 12 | 12 |
| 2 FT | 10 | 8 | 8 | 4 | 6 | 4 | 10.5 | 38.6 | 26.3 | 34.8 | 4 | 7 | 4 | 7 | 28.0 | 28 | 40 | 5 | 12 | 12 |
| 4 FT | 8 | 8 | 8 | 4 | 12 | 4 | 12 | 25.3 | 24.1 | 32.4 | 4 | 11 | 4 | 12 | 25.3 | 28 | 40 | 5 | 12 | 0 |
| 6 FT | 8 | 8 | 8 | 4 | 12 | 4 | 12 | 24.6 | 24.1 | 32.4 | 4 | 12 | 4 | 12 | 24.6 | 28 | 40 | 5 | 12 | 0 |
| 8 FT | 8 | 8 | 8 | 4 | 12 | 4 | 12 | 24.1 | 24.1 | 32.4 | 4 | 12 | 4 | 12 | 24.1 | 28 | 40 | 5 | 12 | 0 |
| 10 FT | 8 | 8 | 8 | 4 | 12 | 4 | 12 | 23.0 | 24.1 | 32.4 | 4 | 12 | 4 | 12 | 23.0 | 28 | 40 | 5 | 12 | 0 |
| 12 FT | 8 | 8 | 8 | 4 | 12 | 4 | 12 | 23.0 | 24.1 | 32.4 | 4 | 11 | 4 | 12 | 23.0 | 28 | 40 | 5 | 12 | 0 |
| 14 FT | 8 | 8 | 8 | 4 | 11 | 4 | 12 | 23.0 | 24.1 | 32.4 | 4 | 9.5 | 4 | 11.5 | 23.0 | 28 | 40 | 5 | 12 | 0 |
| 16 FT | 8 | 8 | 8 | 4 | 10 | 4 | 11 | 23.0 | 24.1 | 32.4 | 4 | 8.5 | 4 | 10 | 23.0 | 28 | 40 | 5 | 12 | 0 |
| 18 FT | 8 | 8 | 8 | 4 | 8.5 | 4 | 10 | 23.0 | 24.1 | 32.4 | 4 | 7.5 | 4 | 9 | 22.4 | 28 | 40 | 5 | 12 | 0 |
| 20 FT | 8 | 8 | 8 | 4 | 8 | 4 | 9 | 23.0 | 24.1 | 32.4 | 4 | 6.5 | 4 | 8 | 22.4 | 28 | 40 | 5 | 12 | 0 |
| 22 FT | 8 | 8 | 8 | 4 | 7 | 4 | 8 | 23.0 | 24.1 | 32.4 | 4 | 6 | 4 | 7.5 | 22.4 | 28 | 40 | 5 | 12 | 0 |
| 24 FT | 8 | 8 | 8 | 4 | 6.5 | 4 | 7.5 | 23.0 | 24.1 | 32.4 | 5 | 8.5 | 4 | 6.5 | 22.4 | 28 | 40 | 5 | 12 | 0 |
| 26 FT | 8 | 8 | 8 | 4 | 6 | 4 | 7 | 23.0 | 24.1 | 32.4 | 5 | 8 | 4 | 6 | 22.4 | 28 | 40 | 5 | 12 | 0 |
| 28 FT | 8 | 9 | 8 | 4 | 6 | 4 | 6.5 | 23.0 | 24.1 | 32.1 | 5 | 8 | 4 | 8 | 21.9 | 29 | 41 | 5 | 12 | 0 |
| 30 FT | 8 | 9 | 8 | 4 | 6 | 4 | 6 | 23.0 | 24.1 | 32.1 | 5 | 7.5 | 4 | 7.5 | 21.9 | 29 | 41 | 5 | 12 | 0 |
| 32 FT | 8 | 10 | 8 | 4 | 6 | 5 | 6.5 | 23.0 | 24.0 | 31.9 | 5 | 7.5 | 4 | 10 | 21.3 | 30 | 42 | 5 | 12 | 0 |
| 34 FT | 9 | 10 | 8 | 5 | 8.5 | 4 | 7 | 22.4 | 25.1 | 33.0 | 5 | 7.5 | 4 | 9.5 | 21.3 | 30 | 42 | 5 | 12 | 0 |
| 36 FT | 9 | 10 | 8 | 5 | 8.5 | 4 | 7 | 22.4 | 25.1 | 33.0 | 5 | 7 | 4 | 9 | 21.3 | 30 | 42 | 5 | 12 | 0 |
| 38 FT | 9 | 11 | 8 | 5 | 8.5 | 4 | 6.5 | 22.4 | 25.4 | 33.1 | 5 | 7 | 4 | 10 | 20.8 | 31 | 43 | 5 | 12 | 0 |
| 40 FT | 9 | 11 | 8 | 5 | 8.5 | 4 | 6 | 22.4 | 25.4 | 33.1 | 5 | 6.5 | 4 | 9.5 | 20.8 | 31 | 43 | 5 | 12 | 0 |
| 42 FT | 10 | 11 | 8 | 5 | 8 | 4 | 7 | 21.9 | 26.0 | 33.8 | 5 | 6.5 | 4 | 9 | 21.3 | 31 | 43 | 5 | 12 | 0 |
| 44 FT | 10 | 11 | 8 | 5 | 8 | 4 | 6.5 | 21.9 | 26.0 | 33.8 | 5 | 6.5 | 4 | 8.5 | 21.3 | 31 | 43 | 5 | 12 | 0 |
| 46 FT | 10 | 12 | 8 | 5 | 8 | 4 | 6.5 | 21.9 | 26.3 | 33.9 | 5 | 6 | 4 | 9.5 | 20.8 | 32 | 44 | 5 | 12 | 0 |
| 48 FT | 10 | 12 | 8 | 5 | 8 | 4 | 6 | 21.9 | 26.3 | 33.9 | 5 | 6 | 4 | 9.5 | 20.8 | 32 | 44 | 5 | 12 | 0 |
| 50 FT | 11 | 12 | 8 | 5 | 7.5 | 4 | 7 | 21.3 | 27.3 | 35.1 | 5 | 6 | 4 | 9.5 | 21.3 | 32 | 44 | 5 | 12 | 0 |

| SPAN (S) = 4 FT HEIGHT (HT) = 4 FT OR 5 FT | | | | | | | | | | | | | | | | | | | |
|---|---|---|---|---|---|---|---|---|---|---|---|---|---|---|---|---|---|---|---|
| DESIGN FILL | MEMBER THICKNESS | | | TOP SLAB BARS | | | | | | | BOTTOM SLAB BARS | | | | | | | | WALL BARS |
| | | | | A1 BARS | | J3 BARS | | | | | A2 BARS | | J4 BARS | | | | | B2 BARS | |
| | TS | BS | TX | SIZE | SPA. | SIZE | SPA. | C1 | K2 HT=4' | K2 HT=5' | SIZE | SPA. | SIZE | SPA. | C4 | K3 HT=4' | K3 HT=5' | SIZE | SPA. | G1 |
| 1 FT | 10 | 8 | 8 | 5 | 9 | 4 | 10.5 | 38.6 | 26.3 | 31.4 | 4 | 6 | 4 | 8 | 38.6 | 52 | 64 | 5 | 12 | 12 |
| 2 FT | 10 | 8 | 8 | 5 | 9 | 4 | 10.5 | 38.6 | 26.3 | 31.4 | 4 | 6 | 4 | 7.5 | 38.6 | 52 | 64 | 5 | 12 | 12 |
| 4 FT | 8 | 8 | 8 | 4 | 11.5 | 4 | 12 | 38.6 | 24.3 | 29.1 | 4 | 9.5 | 4 | 11.5 | 38.6 | 52 | 64 | 5 | 12 | 0 |
| 6 FT | 8 | 8 | 8 | 4 | 12 | 4 | 12 | 35.9 | 24.3 | 29.1 | 4 | 11 | 4 | 11.5 | 35.3 | 52 | 64 | 5 | 12 | 0 |
| 8 FT | 8 | 8 | 8 | 4 | 12 | 4 | 12 | 32.5 | 24.3 | 29.1 | 4 | 11 | 4 | 11 | 32.5 | 52 | 64 | 5 | 12 | 0 |
| 10 FT | 8 | 8 | 8 | 4 | 12 | 4 | 12 | 28.0 | 24.3 | 29.1 | 4 | 11.5 | 4 | 11.5 | 28.0 | 52 | 64 | 5 | 12 | 0 |
| 12 FT | 8 | 8 | 8 | 4 | 12 | 4 | 12 | 27.5 | 24.3 | 29.1 | 4 | 10 | 4 | 10.5 | 28.0 | 52 | 64 | 5 | 12 | 0 |
| 14 FT | 8 | 8 | 8 | 4 | 10.5 | 4 | 12 | 27.5 | 24.3 | 29.1 | 4 | 9 | 4 | 10 | 27.5 | 52 | 64 | 5 | 12 | 0 |
| 16 FT | 8 | 8 | 8 | 4 | 9.5 | 4 | 11 | 26.9 | 24.3 | 29.1 | 4 | 8 | 4 | 9.5 | 27.5 | 52 | 64 | 5 | 12 | 0 |
| 18 FT | 8 | 8 | 8 | 4 | 8.5 | 4 | 9.5 | 26.9 | 24.3 | 29.1 | 4 | 7 | 4 | 8.5 | 27.5 | 52 | 64 | 5 | 12 | 0 |
| 20 FT | 8 | 8 | 8 | 4 | 7.5 | 4 | 9 | 26.9 | 24.3 | 29.1 | 4 | 6.5 | 4 | 7.5 | 27.5 | 52 | 64 | 5 | 12 | 0 |
| 22 FT | 8 | 8 | 8 | 4 | 7 | 4 | 8 | 26.9 | 24.3 | 29.1 | 4 | 6 | 4 | 7 | 27.5 | 52 | 64 | 5 | 12 | 0 |
| 24 FT | 8 | 8 | 8 | 4 | 6 | 4 | 7.5 | 26.9 | 24.3 | 29.1 | 5 | 8.5 | 4 | 6.5 | 26.9 | 52 | 64 | 5 | 12 | 0 |
| 26 FT | 8 | 8 | 8 | 4 | 6 | 4 | 6.5 | 26.9 | 24.3 | 29.1 | 5 | 8 | 4 | 6 | 26.9 | 52 | 64 | 5 | 12 | 0 |
| 28 FT | 8 | 9 | 8 | 4 | 6 | 4 | 6 | 26.9 | 24.0 | 28.8 | 5 | 8 | 4 | 7.5 | 27.5 | 53 | 65 | 5 | 12 | 0 |
| 30 FT | 8 | 9 | 8 | 4 | 6 | 4 | 6 | 26.9 | 24.0 | 28.8 | 5 | 7.5 | 4 | 7 | 27.5 | 53 | 65 | 5 | 12 | 0 |
| 32 FT | 8 | 9 | 8 | 4 | 6 | 5 | 6.5 | 26.9 | 24.0 | 28.8 | 5 | 7.5 | 4 | 6.5 | 27.5 | 53 | 65 | 5 | 12 | 0 |
| 34 FT | 9 | 10 | 8 | 5 | 8.5 | 4 | 6.5 | 26.9 | 25.4 | 30.4 | 5 | 7 | 4 | 7.5 | 28.0 | 54 | 66 | 5 | 12 | 0 |
| 36 FT | 9 | 10 | 8 | 5 | 8.5 | 4 | 6 | 26.9 | 25.4 | 30.4 | 5 | 7 | 4 | 7 | 28.0 | 54 | 66 | 5 | 12 | 0 |
| 38 FT | 9 | 10 | 8 | 5 | 8.5 | 5 | 7 | 26.9 | 25.4 | 30.4 | 5 | 7 | 4 | 7 | 28.0 | 54 | 66 | 5 | 12 | 0 |
| 40 FT | 9 | 11 | 8 | 5 | 8.5 | 5 | 6.5 | 26.9 | 25.3 | 30.0 | 5 | 6.5 | 4 | 7 | 28.5 | 55 | 67 | 5 | 12 | 0 |
| 42 FT | 10 | 11 | 8 | 5 | 8 | 5 | 7.5 | 27.5 | 26.3 | 31.1 | 5 | 6.5 | 4 | 6.5 | 28.5 | 55 | 67 | 5 | 12 | 0 |
| 44 FT | 10 | 11 | 8 | 5 | 8 | 5 | 7.5 | 27.5 | 26.3 | 31.1 | 5 | 6.5 | 4 | 6 | 28.5 | 55 | 67 | 5 | 12 | 0 |
| 46 FT | 10 | 11 | 8 | 5 | 8 | 5 | 7.5 | 27.5 | 26.3 | 31.1 | 5 | 6.5 | 4 | 6 | 28.5 | 55 | 67 | 5 | 12 | 0 |
| 48 FT | 10 | 12 | 8 | 5 | 8 | 5 | 7.5 | 27.5 | 26.0 | 30.8 | 5 | 6 | 4 | 6 | 29.1 | 56 | 68 | 5 | 11.5 | 0 |
| 50 FT | 11 | 12 | 8 | 5 | 7.5 | 5 | 8 | 28.0 | 27.0 | 32.0 | 5 | 6 | 4 | 6 | 29.1 | 56 | 68 | 5 | 11 | 0 |

| SPAN (S) = 4 FT HEIGHT (HT) = 6 FT OR 7 FT | | | | | | | | | | | | | | | | | | | |
|---|---|---|---|---|---|---|---|---|---|---|---|---|---|---|---|---|---|---|---|
| DESIGN FILL | MEMBER THICKNESS | | | TOP SLAB BARS | | | | | | | BOTTOM SLAB BARS | | | | | | | | WALL BARS |
| | | | | A1 BARS | | J3 BARS | | | | | A2 BARS | | J4 BARS | | | | | B2 BARS | |
| | TS | BS | TX | SIZE | SPA. | SIZE | SPA. | C1 | K2 HT=6' | K2 HT=7' | SIZE | SPA. | SIZE | SPA. | C4 | K3 HT=6' | K3 HT=7' | SIZE | SPA. | G1 |
| 1 FT | 10 | 8 | 8 | 5 | 8.5 | 4 | 10.5 | 38.6 | 26.4 | 30.1 | 5 | 9 | 4 | 7 | 38.6 | 76 | 88 | 5 | 12 | 12 |
| 2 FT | 10 | 8 | 8 | 5 | 8.5 | 4 | 10.5 | 38.6 | 26.4 | 30.1 | 5 | 8.5 | 4 | 6.5 | 38.6 | 76 | 88 | 5 | 12 | 12 |
| 4 FT | 8 | 8 | 8 | 4 | 11 | 4 | 11 | 38.6 | 24.1 | 27.5 | 4 | 9 | 4 | 8 | 38.6 | 76 | 88 | 5 | 12 | 0 |
| 6 FT | 8 | 8 | 8 | 4 | 12 | 4 | 11 | 38.6 | 24.1 | 27.5 | 4 | 10.5 | 4 | 7 | 38.6 | 76 | 88 | 5 | 12 | 0 |
| 8 FT | 8 | 8 | 8 | 4 | 12 | 4 | 10 | 38.6 | 24.1 | 27.5 | 4 | 10.5 | 4 | 7 | 38.6 | 76 | 88 | 5 | 12 | 0 |
| 10 FT | 8 | 8 | 8 | 4 | 12 | 4 | 11 | 38.6 | 24.1 | 27.5 | 4 | 11 | 4 | 7 | 38.6 | 76 | 88 | 5 | 12 | 0 |
| 12 FT | 8 | 8 | 8 | 4 | 12 | 4 | 9.5 | 38.6 | 24.1 | 27.5 | 4 | 10 | 4 | 6.5 | 38.6 | 76 | 88 | 5 | 12 | 0 |
| 14 FT | 8 | 8 | 8 | 4 | 10.5 | 4 | 8 | 38.6 | 24.1 | 27.5 | 4 | 8.5 | 4 | 6 | 38.6 | 76 | 88 | 5 | 12 | 0 |
| 16 FT | 8 | 9 | 8 | 4 | 9.5 | 4 | 7 | 38.6 | 24.4 | 27.9 | 4 | 8.5 | 4 | 6.5 | 38.6 | 77 | 89 | 5 | 12 | 0 |
| 18 FT | 8 | 9 | 8 | 4 | 8.5 | 4 | 6.5 | 38.6 | 24.4 | 27.9 | 4 | 7.5 | 4 | 6 | 38.6 | 77 | 89 | 5 | 12 | 0 |
| 20 FT | 8 | 10 | 8 | 4 | 8 | 4 | 6 | 38.6 | 24.6 | 28.1 | 4 | 7.5 | 4 | 6 | 40.9 | 78 | 90 | 5 | 11.5 | 0 |
| 22 FT | 8 | 10 | 9 | 4 | 7.5 | 4 | 6.5 | 40.5 | 24.6 | 28.1 | 4 | 7 | 4 | 7 | 39.9 | 78 | 90 | 5 | 11.5 | 0 |
| 24 FT | 8 | 10 | 9 | 4 | 7 | 4 | 6 | 39.9 | 24.6 | 28.1 | 4 | 6.5 | 4 | 6.5 | 39.9 | 78 | 90 | 5 | 11 | 0 |
| 26 FT | 8 | 10 | 9 | 4 | 6.5 | 5 | 6.5 | 39.4 | 24.6 | 28.1 | 4 | 6 | 4 | 6 | 39.9 | 78 | 90 | 5 | 10 | 0 |
| 28 FT | 8 | 10 | 9 | 4 | 6 | 5 | 6 | 38.8 | 24.6 | 28.1 | 5 | 9 | 5 | 7 | 41.6 | 78 | 90 | 5 | 9.5 | 0 |
| 30 FT | 8 | 10 | 9 | 4 | 6 | 6 | 7.5 | 41.0 | 24.6 | 28.1 | 5 | 8.5 | 5 | 6.5 | 41.6 | 78 | 90 | 5 | 9 | 0 |
| 32 FT | 8 | 10 | 9 | 4 | 6 | 6 | 7 | 40.5 | 24.6 | 28.1 | 5 | 8 | 5 | 6 | 41.6 | 78 | 90 | 5 | 8.5 | 0 |
| 34 FT | 9 | 11 | 9 | 5 | 8.5 | 5 | 6 | 41.6 | 26.1 | 29.8 | 5 | 8.5 | 5 | 6 | 41.6 | 79 | 91 | 5 | 8.5 | 0 |
| 36 FT | 9 | 11 | 9 | 5 | 8.5 | 5 | 6 | 41.6 | 26.1 | 29.8 | 5 | 8 | 5 | 6 | 41.6 | 79 | 91 | 5 | 8.5 | 0 |
| 38 FT | 9 | 11 | 9 | 5 | 8.5 | 5 | 6 | 41.6 | 26.1 | 29.8 | 5 | 7.5 | 6 | 7 | 43.9 | 79 | 91 | 5 | 8.5 | 0 |
| 40 FT | 9 | 11 | 9 | 5 | 8.5 | 5 | 6 | 41.6 | 26.1 | 29.8 | 5 | 7 | 6 | 7 | 43.9 | 79 | 91 | 5 | 8.5 | 0 |
| 42 FT | 10 | 11 | 9 | 5 | 8 | 5 | 6 | 41.6 | 30.8 | 35.0 | 5 | 7 | 6 | 6.5 | 43.9 | 79 | 91 | 5 | 8.5 | 0 |
| 44 FT | 10 | 11 | 9 | 5 | 8 | 5 | 6 | 41.6 | 30.8 | 35.0 | 5 | 6.5 | 6 | 6.5 | 43.9 | 79 | 91 | 5 | 8.5 | 0 |
| 46 FT | 10 | 11 | 10 | 5 | 8 | 5 | 6.5 | 42.9 | 26.4 | 30.0 | 5 | 6.5 | 5 | 6 | 42.9 | 79 | 91 | 5 | 8 | 0 |
| 48 FT | 10 | 11 | 10 | 5 | 8 | 5 | 6.5 | 42.9 | 30.8 | 35.0 | 5 | 6 | 6 | 7.5 | 44.6 | 79 | 91 | 5 | 8 | 0 |
| 50 FT | 11 | 12 | 11 | 5 | 7.5 | 5 | 7 | 44.3 | 27.9 | 31.6 | 5 | 6.5 | 5 | 7.5 | 43.6 | 80 | 92 | 5 | 7.5 | 0 |

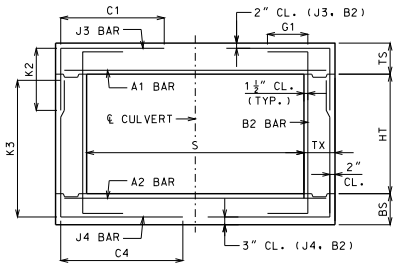


BAR DIMENSIONS DIAGRAM
SYMMETRICAL ABOUT ℄ CULVERT.

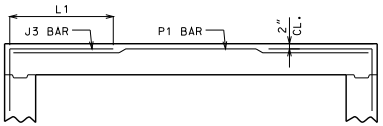


ALTERNATE J3 BAR

AT CONTRACTOR'S OPTION, ALTERNATE J3 BARS MAY BE USED WHEN THE DISTANCE BETWEEN THE ENDS OF J3 BARS IN THE TOP SLAB IS LESS THAN 2'-0". DIMENSION L1 (NOT C1) SHALL BE USED WITH ALTERNATE J3 BARS. WHERE L1 IS EQUAL TO 18", 22" AND 28" FOR #4, #5 AND #6 BARS, RESPECTIVELY. ADDITIONAL P1 BARS ARE REQUIRED WITH ALTERNATE J3 BARS WITH A LENGTH EQUAL TO A1 BARS, AND SIZE AND SPACING EQUAL TO J3 BARS. NO ADDITIONAL PAYMENT WILL BE MADE FOR THIS SUBSTITUTION.

GENERAL NOTES:

IF DESIGN FILL IS BETWEEN TABULATED DESIGN FILLS, USE THE NEXT GREATER TABULATED DESIGN FILL, EXCEPT FOR DESIGN FILLS BETWEEN 2 FEET AND 4 FEET. FOR DESIGN FILLS BETWEEN 2 FEET AND 4 FEET USE THE GREATER MEMBER THICKNESS, AREA OF REINFORCEMENT AND BAR DIMENSIONS FROM THE 2 FEET AND 4 FEET TABULATED DESIGN FILLS. AREA OF REINFORCEMENT EQUALS BAR AREA PER FOOT SPACING.

SPECIAL DESIGNS ARE REQUIRED WHEN THE DESIGN FILL IS LESS THAN 1 FOOT OR GREATER THAN 50 FEET.

DIMENSIONS ARE IN INCHES UNLESS OTHERWISE SPECIFIED.

DESIGN FILLS ARE MEASURED FROM THE TOP OF TOP SLAB TO THE TOP OF EARTH FILL OR ROADWAY.

CULVERTS MEET STRENGTH AND SERVICEABILITY REQUIREMENTS FOR THE DESIGN VEHICULAR LIVE LOAD HL-93 MINUS THE LANE LOAD.


MISSOURI HIGHWAYS AND TRANSPORTATION COMMISSION
105 WEST CAPITOL
JEFFERSON CITY, MO 65102
1-888-ASK-MODOT (1-888-275-6636)


DENNIS W. HECKMAN NUMBER PE-27141 STATE OF MISSOURI PROFESSIONAL ENGINEER
THIS SHEET HAS BEEN SIGNED, SEALED AND DATED ELECTRONICALLY.

# CONCRETE SINGLE BOX CULVERT

MEMBER THICKNESS
BAR SIZE, SPACING & DIMENSIONS

SPAN (S): 4 FEET
HEIGHT (HT): 2 THRU 7 FEET

DATE EFFECTIVE: 04/01/2011
DATE PREPARED: 4/18/2011

703.17

SHEET NO.
2 OF 14

IF A SEAL IS PRESENT ON THIS SHEET IT HAS BEEN ELECTRONICALLY SEALED AND DATED.

SPAN (S) = 5 FT  HEIGHT (HT) = 3 FT OR 4 FT

| DESIGN FILL | MEMBER THICKNESS | | | TOP SLAB BARS | | | | | | | BOTTOM SLAB BARS | | | | | | | WALL BARS | | |
|---|---|---|---|---|---|---|---|---|---|---|---|---|---|---|---|---|---|---|---|---|
| | | | | A1 BARS | | J3 BARS | | | | | A2 BARS | | J4 BARS | | | | | B2 BARS | | |
| | TS | BS | TX | SIZE | SPA. | SIZE | SPA. | C1 | K2 HT=3′ | K2 HT=4′ | SIZE | SPA. | SIZE | SPA. | C4 | K3 HT=3′ | K3 HT=4′ | SIZE | SPA. | G1 |
| 1 FT | 10 | 8 | 8 | 5 | 8 | 4 | 10.5 | 44.9 | 26.5 | 33.0 | 5 | 8.5 | 4 | 6 | 35.4 | 40 | 52 | 5 | 12 | 12 |
| 2 FT | 10 | 8 | 8 | 5 | 8 | 4 | 10.5 | 44.9 | 26.5 | 33.0 | 5 | 8 | 4 | 6 | 32.0 | 40 | 52 | 5 | 12 | 12 |
| 4 FT | 8 | 8 | 8 | 4 | 8.5 | 4 | 10.5 | 28.5 | 24.5 | 30.6 | 4 | 7.5 | 4 | 10 | 28.5 | 40 | 52 | 5 | 12 | 0 |
| 6 FT | 8 | 8 | 8 | 4 | 10 | 4 | 12 | 27.3 | 24.5 | 30.6 | 4 | 8 | 4 | 10 | 27.3 | 40 | 52 | 5 | 12 | 0 |
| 8 FT | 8 | 8 | 8 | 4 | 9.5 | 4 | 11 | 26.5 | 24.5 | 30.6 | 4 | 8 | 4 | 9.5 | 26.5 | 40 | 52 | 5 | 12 | 0 |
| 10 FT | 8 | 8 | 8 | 4 | 10 | 4 | 12 | 25.1 | 24.5 | 30.6 | 4 | 8.5 | 4 | 10.5 | 25.1 | 40 | 52 | 5 | 12 | 0 |
| 12 FT | 8 | 8 | 8 | 4 | 8.5 | 4 | 10 | 25.1 | 24.5 | 30.6 | 4 | 7 | 4 | 9 | 25.1 | 40 | 52 | 5 | 12 | 0 |
| 14 FT | 8 | 8 | 8 | 4 | 7.5 | 4 | 8.5 | 25.1 | 24.5 | 30.6 | 4 | 6 | 4 | 7.5 | 25.1 | 40 | 52 | 5 | 12 | 0 |
| 16 FT | 8 | 8 | 8 | 4 | 6.5 | 4 | 7.5 | 25.1 | 24.5 | 30.6 | 5 | 8.5 | 4 | 7 | 25.1 | 40 | 52 | 5 | 12 | 0 |
| 18 FT | 8 | 8 | 8 | 4 | 6 | 4 | 6.5 | 25.1 | 24.5 | 30.6 | 5 | 8 | 4 | 6 | 25.1 | 40 | 52 | 5 | 12 | 0 |
| 20 FT | 8 | 8 | 8 | 4 | 6 | 4 | 6 | 25.1 | 24.5 | 30.6 | 5 | 8 | 5 | 6.5 | 25.1 | 40 | 52 | 5 | 12 | 0 |
| 22 FT | 8 | 9 | 8 | 4 | 6 | 5 | 6.5 | 25.1 | 24.0 | 30.0 | 5 | 7.5 | 4 | 7 | 23.8 | 41 | 53 | 5 | 12 | 0 |
| 24 FT | 8 | 9 | 8 | 4 | 6 | 5 | 6 | 25.1 | 24.0 | 30.0 | 5 | 7.5 | 4 | 6.5 | 23.8 | 41 | 53 | 5 | 12 | 0 |
| 26 FT | 9 | 10 | 8 | 5 | 8.5 | 4 | 6.5 | 24.5 | 25.0 | 31.0 | 5 | 7 | 4 | 8.5 | 23.8 | 42 | 54 | 5 | 12 | 0 |
| 28 FT | 9 | 10 | 8 | 5 | 8.5 | 4 | 6 | 24.5 | 25.0 | 31.0 | 5 | 7 | 4 | 8 | 23.8 | 42 | 54 | 5 | 12 | 0 |
| 30 FT | 9 | 11 | 8 | 5 | 8 | 5 | 6.5 | 24.5 | 25.5 | 31.5 | 5 | 6.5 | 4 | 9 | 23.1 | 43 | 55 | 5 | 12 | 0 |
| 32 FT | 10 | 11 | 8 | 5 | 8 | 4 | 6 | 23.8 | 26.0 | 32.0 | 5 | 6.5 | 4 | 8 | 23.1 | 43 | 55 | 5 | 12 | 0 |
| 34 FT | 10 | 12 | 8 | 5 | 7.5 | 5 | 7.5 | 23.8 | 26.5 | 32.5 | 5 | 6 | 4 | 9 | 22.5 | 44 | 56 | 5 | 12 | 0 |
| 36 FT | 10 | 12 | 8 | 5 | 7 | 5 | 7.5 | 23.8 | 26.5 | 32.5 | 5 | 6 | 4 | 8.5 | 22.5 | 44 | 56 | 5 | 12 | 0 |
| 38 FT | 11 | 12 | 8 | 5 | 7 | 4 | 6 | 23.8 | 27.0 | 33.0 | 5 | 6 | 4 | 8 | 23.1 | 44 | 56 | 5 | 12 | 0 |
| 40 FT | 11 | 13 | 8 | 5 | 6.5 | 5 | 8.5 | 23.8 | 27.5 | 33.5 | 5 | 6 | 4 | 8.5 | 22.5 | 45 | 57 | 5 | 12 | 0 |
| 42 FT | 12 | 13 | 8 | 5 | 6.5 | 4 | 6 | 23.1 | 28.0 | 34.0 | 5 | 6 | 4 | 8 | 23.1 | 45 | 57 | 5 | 12 | 0 |
| 44 FT | 12 | 13 | 8 | 5 | 6.5 | 5 | 9 | 23.1 | 28.0 | 34.0 | 5 | 6 | 4 | 7.5 | 23.1 | 45 | 57 | 5 | 12 | 0 |
| 46 FT | 12 | 14 | 8 | 5 | 6 | 5 | 8.5 | 23.8 | 28.5 | 34.5 | 6 | 8 | 4 | 7.5 | 22.5 | 46 | 58 | 5 | 12 | 0 |
| 48 FT | 13 | 14 | 8 | 5 | 6 | 4 | 6 | 23.1 | 29.0 | 35.0 | 6 | 8 | 4 | 7.5 | 23.1 | 46 | 58 | 5 | 12 | 0 |
| 50 FT | 13 | 14 | 8 | 5 | 6 | 5 | 8.5 | 23.1 | 29.0 | 35.0 | 6 | 8 | 4 | 7.5 | 23.1 | 46 | 58 | 5 | 12 | 0 |

SPAN (S) = 5 FT  HEIGHT (HT) = 5 FT OR 6 FT

| DESIGN FILL | MEMBER THICKNESS | | | TOP SLAB BARS | | | | | | | BOTTOM SLAB BARS | | | | | | | WALL BARS | | |
|---|---|---|---|---|---|---|---|---|---|---|---|---|---|---|---|---|---|---|---|---|
| | | | | A1 BARS | | J3 BARS | | | | | A2 BARS | | J4 BARS | | | | | B2 BARS | | |
| | TS | BS | TX | SIZE | SPA. | SIZE | SPA. | C1 | K2 HT=5′ | K2 HT=6′ | SIZE | SPA. | SIZE | SPA. | C4 | K3 HT=5′ | K3 HT=6′ | SIZE | SPA. | G1 |
| 1 FT | 10 | 8 | 8 | 5 | 8 | 4 | 10.5 | 44.9 | 26.3 | 30.6 | 5 | 8 | 4 | 6 | 44.9 | 64 | 76 | 5 | 12 | 12 |
| 2 FT | 10 | 8 | 8 | 5 | 8 | 4 | 10.5 | 44.9 | 26.3 | 30.6 | 5 | 8 | 4 | 6 | 44.9 | 64 | 76 | 5 | 12 | 12 |
| 4 FT | 8 | 8 | 8 | 4 | 8 | 4 | 11 | 44.9 | 24.1 | 28.3 | 4 | 7 | 4 | 8.5 | 44.9 | 64 | 76 | 5 | 12 | 0 |
| 6 FT | 8 | 8 | 8 | 4 | 9 | 4 | 10.5 | 39.5 | 24.1 | 28.3 | 4 | 7.5 | 4 | 8 | 38.1 | 64 | 76 | 5 | 12 | 0 |
| 8 FT | 8 | 8 | 8 | 4 | 9 | 4 | 10 | 34.6 | 24.1 | 28.3 | 4 | 7 | 4 | 7.5 | 34.6 | 64 | 76 | 5 | 12 | 0 |
| 10 FT | 8 | 8 | 8 | 4 | 9.5 | 4 | 11 | 30.6 | 24.1 | 28.3 | 4 | 8 | 4 | 8 | 30.6 | 64 | 76 | 5 | 12 | 0 |
| 12 FT | 8 | 8 | 8 | 4 | 8 | 4 | 9 | 29.9 | 24.1 | 28.3 | 4 | 6.5 | 4 | 7.5 | 30.6 | 64 | 76 | 5 | 12 | 0 |
| 14 FT | 8 | 8 | 8 | 4 | 7 | 4 | 8 | 29.9 | 24.1 | 28.3 | 4 | 6 | 4 | 6.5 | 29.9 | 64 | 76 | 5 | 12 | 0 |
| 16 FT | 8 | 8 | 8 | 4 | 6 | 4 | 7 | 29.3 | 24.1 | 28.3 | 5 | 8 | 4 | 6 | 29.9 | 64 | 76 | 5 | 12 | 0 |
| 18 FT | 8 | 8 | 8 | 4 | 6 | 4 | 6 | 29.3 | 24.1 | 28.3 | 5 | 8 | 5 | 6.5 | 29.9 | 64 | 76 | 5 | 12 | 0 |
| 20 FT | 8 | 8 | 8 | 4 | 6 | 5 | 6.5 | 29.3 | 24.1 | 28.3 | 5 | 8 | 5 | 6 | 29.9 | 64 | 76 | 5 | 12 | 0 |
| 22 FT | 8 | 9 | 8 | 4 | 6 | 5 | 6 | 29.3 | 24.5 | 28.5 | 5 | 7.5 | 4 | 6 | 29.9 | 65 | 77 | 5 | 12 | 0 |
| 24 FT | 8 | 9 | 8 | 5 | 9 | 6 | 7.5 | 32.0 | 28.1 | 32.8 | 5 | 7.5 | 5 | 6.5 | 29.9 | 65 | 77 | 5 | 12 | 0 |
| 26 FT | 9 | 10 | 8 | 5 | 8.5 | 5 | 6.5 | 29.3 | 25.1 | 29.3 | 5 | 7 | 4 | 6 | 30.6 | 66 | 78 | 5 | 12 | 0 |
| 28 FT | 9 | 10 | 8 | 5 | 8 | 5 | 6.5 | 29.3 | 25.1 | 29.3 | 5 | 7 | 5 | 7 | 29.9 | 66 | 78 | 5 | 12 | 0 |
| 30 FT | 9 | 10 | 8 | 5 | 7.5 | 5 | 6.5 | 29.3 | 29.6 | 34.4 | 5 | 6.5 | 5 | 6.5 | 29.9 | 66 | 78 | 5 | 12 | 0 |
| 32 FT | 10 | 11 | 8 | 5 | 7.5 | 5 | 7 | 29.3 | 26.6 | 30.8 | 5 | 6.5 | 5 | 7.5 | 30.6 | 67 | 79 | 5 | 12 | 0 |
| 34 FT | 10 | 11 | 8 | 5 | 7.5 | 5 | 6.5 | 29.3 | 26.6 | 30.8 | 5 | 6.5 | 5 | 7 | 30.6 | 67 | 79 | 5 | 11.5 | 0 |
| 36 FT | 10 | 11 | 8 | 5 | 7 | 5 | 6.5 | 29.3 | 30.4 | 35.3 | 5 | 6 | 5 | 6 | 30.6 | 67 | 79 | 5 | 11 | 0 |
| 38 FT | 11 | 12 | 8 | 5 | 7 | 5 | 7 | 29.9 | 27.3 | 31.5 | 5 | 6 | 5 | 7 | 31.3 | 68 | 80 | 5 | 10 | 0 |
| 40 FT | 11 | 12 | 8 | 5 | 6.5 | 5 | 6.5 | 29.9 | 31.3 | 36.0 | 5 | 6 | 5 | 6.5 | 31.3 | 68 | 80 | 5 | 10 | 0 |
| 42 FT | 11 | 13 | 8 | 5 | 6.5 | 5 | 6 | 29.9 | 27.6 | 31.9 | 5 | 6 | 5 | 7 | 31.3 | 69 | 81 | 5 | 9.5 | 0 |
| 44 FT | 12 | 13 | 8 | 5 | 6.5 | 5 | 6.5 | 29.9 | 28.0 | 32.3 | 5 | 6 | 5 | 6.5 | 32.0 | 69 | 81 | 5 | 9.5 | 0 |
| 46 FT | 12 | 13 | 8 | 5 | 6 | 5 | 6 | 29.9 | 32.0 | 36.8 | 5 | 6 | 5 | 6 | 31.3 | 69 | 81 | 5 | 9.5 | 0 |
| 48 FT | 12 | 14 | 9 | 5 | 6 | 5 | 7 | 30.4 | 28.4 | 32.5 | 6 | 8 | 5 | 8 | 31.8 | 70 | 82 | 5 | 9.5 | 0 |
| 50 FT | 13 | 14 | 9 | 5 | 6 | 5 | 7.5 | 30.4 | 29.5 | 33.9 | 6 | 8 | 5 | 7.5 | 32.4 | 70 | 82 | 5 | 9 | 0 |

SPAN (S) = 5 FT  HEIGHT (HT) = 7 FT OR 8 FT

| DESIGN FILL | MEMBER THICKNESS | | | TOP SLAB BARS | | | | | | | BOTTOM SLAB BARS | | | | | | | WALL BARS | | |
|---|---|---|---|---|---|---|---|---|---|---|---|---|---|---|---|---|---|---|---|---|
| | | | | A1 BARS | | J3 BARS | | | | | A2 BARS | | J4 BARS | | | | | B2 BARS | | |
| | TS | BS | TX | SIZE | SPA. | SIZE | SPA. | C1 | K2 HT=7′ | K2 HT=8′ | SIZE | SPA. | SIZE | SPA. | C4 | K3 HT=7′ | K3 HT=8′ | SIZE | SPA. | G1 |
| 1 FT | 10 | 9 | 8 | 5 | 8 | 4 | 9.5 | 44.9 | 26.5 | 29.8 | 5 | 7.5 | 4 | 7 | 44.9 | 89 | 101 | 5 | 12 | 12 |
| 2 FT | 10 | 9 | 8 | 5 | 8 | 4 | 8.5 | 44.9 | 26.5 | 29.8 | 5 | 7.5 | 4 | 6.5 | 44.9 | 89 | 101 | 5 | 12 | 12 |
| 4 FT | 8 | 8 | 8 | 4 | 7.5 | 4 | 7.5 | 44.9 | 24.8 | 27.9 | 4 | 6.5 | 4 | 6 | 44.9 | 88 | 100 | 5 | 12 | 0 |
| 6 FT | 8 | 9 | 8 | 4 | 9 | 4 | 7.5 | 44.9 | 24.0 | 27.0 | 4 | 7.5 | 4 | 6.5 | 44.9 | 89 | 101 | 5 | 12 | 0 |
| 8 FT | 8 | 9 | 8 | 4 | 9 | 4 | 7 | 44.9 | 24.0 | 27.0 | 4 | 7.5 | 4 | 6 | 44.9 | 89 | 101 | 5 | 12 | 0 |
| 10 FT | 8 | 9 | 8 | 4 | 10 | 4 | 7.5 | 44.9 | 24.0 | 27.0 | 4 | 8 | 4 | 6.5 | 44.9 | 89 | 101 | 5 | 12 | 0 |
| 12 FT | 8 | 10 | 8 | 4 | 8.5 | 4 | 6.5 | 44.9 | 24.3 | 27.3 | 4 | 8 | 4 | 6.5 | 44.9 | 90 | 102 | 5 | 12 | 0 |
| 14 FT | 8 | 10 | 9 | 4 | 7.5 | 4 | 6.5 | 41.4 | 24.3 | 27.3 | 4 | 7 | 4 | 7 | 45.5 | 90 | 102 | 5 | 12 | 0 |
| 16 FT | 8 | 10 | 9 | 4 | 6.5 | 4 | 6 | 40.8 | 24.3 | 27.3 | 4 | 6 | 4 | 6.5 | 45.5 | 90 | 102 | 5 | 11.5 | 0 |
| 18 FT | 8 | 10 | 9 | 4 | 6 | 5 | 6.5 | 40.0 | 24.3 | 27.3 | 5 | 9 | 4 | 6 | 45.5 | 90 | 102 | 5 | 10.5 | 0 |
| 20 FT | 8 | 10 | 9 | 4 | 6 | 5 | 6 | 39.4 | 25.3 | 28.4 | 5 | 8 | 5 | 6.5 | 47.6 | 90 | 102 | 5 | 10 | 0 |
| 22 FT | 8 | 10 | 9 | 4 | 6 | 6 | 7 | 42.1 | 25.3 | 28.4 | 5 | 7.5 | 5 | 6 | 47.6 | 90 | 102 | 5 | 9 | 0 |
| 24 FT | 9 | 11 | 9 | 5 | 8.5 | 5 | 6 | 41.4 | 26.8 | 30.0 | 5 | 7.5 | 5 | 6 | 47.6 | 91 | 103 | 5 | 8.5 | 0 |
| 26 FT | 9 | 11 | 9 | 5 | 8.5 | 5 | 6 | 41.4 | 26.8 | 30.0 | 5 | 7 | 6 | 7.5 | 49.6 | 91 | 103 | 5 | 8.5 | 0 |
| 28 FT | 9 | 11 | 9 | 5 | 8.5 | 5 | 6 | 41.4 | 29.8 | 33.3 | 5 | 6.5 | 6 | 7 | 49.6 | 91 | 103 | 5 | 8.5 | 0 |
| 30 FT | 9 | 11 | 9 | 5 | 8 | 5 | 6 | 40.8 | 29.8 | 33.3 | 5 | 6.5 | 6 | 6.5 | 49.6 | 91 | 103 | 5 | 8.5 | 0 |
| 32 FT | 10 | 11 | 9 | 5 | 8 | 5 | 6 | 46.3 | 30.0 | 33.6 | 5 | 6.5 | 6 | 6 | 49.6 | 91 | 103 | 5 | 8.5 | 0 |
| 34 FT | 10 | 11 | 9 | 5 | 7.5 | 5 | 6 | 45.5 | 30.0 | 33.6 | 5 | 6 | 6 | 6 | 49.6 | 91 | 103 | 5 | 8.5 | 0 |
| 36 FT | 10 | 12 | 10 | 5 | 7 | 5 | 6.5 | 40.6 | 30.3 | 33.9 | 5 | 6 | 5 | 6 | 49.0 | 92 | 104 | 5 | 8 | 0 |
| 38 FT | 11 | 12 | 10 | 5 | 7.5 | 5 | 6 | 43.4 | 31.6 | 35.4 | 5 | 6 | 6 | 7 | 51.1 | 92 | 104 | 5 | 8 | 0 |
| 40 FT | 11 | 12 | 11 | 5 | 7.5 | 5 | 7 | 41.1 | 31.6 | 35.4 | 5 | 6 | 5 | 6.5 | 49.8 | 92 | 104 | 5 | 7.5 | 0 |
| 42 FT | 11 | 13 | 11 | 5 | 7 | 5 | 7 | 41.1 | 31.9 | 35.6 | 5 | 6 | 5 | 6.5 | 49.8 | 93 | 105 | 5 | 7.5 | 0 |
| 44 FT | 12 | 13 | 11 | 5 | 7 | 5 | 6.5 | 43.3 | 32.3 | 36.0 | 5 | 6 | 5 | 6 | 49.8 | 93 | 105 | 5 | 7.5 | 0 |
| 46 FT | 12 | 13 | 11 | 5 | 7 | 5 | 6 | 43.3 | 32.3 | 36.0 | 5 | 6 | 5 | 6 | 49.8 | 93 | 105 | 5 | 7.5 | 0 |
| 48 FT | 12 | 14 | 12 | 5 | 6.5 | 5 | 6.5 | 41.0 | 32.5 | 36.3 | 6 | 8 | 5 | 6.5 | 51.1 | 94 | 106 | 5 | 7 | 0 |
| 50 FT | 13 | 14 | 12 | 5 | 6.5 | 5 | 6.5 | 43.3 | 33.9 | 37.8 | 6 | 8 | 5 | 6.5 | 51.1 | 94 | 106 | 5 | 7 | 0 |

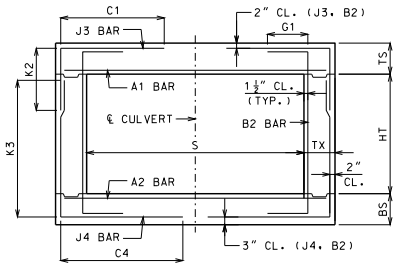


BAR DIMENSIONS DIAGRAM
SYMMETRICAL ABOUT ℄ CULVERT.

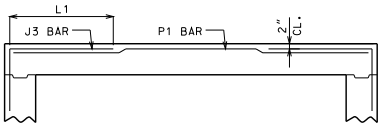


ALTERNATE J3 BAR

AT CONTRACTOR'S OPTION, ALTERNATE J3 BARS MAY BE USED WHEN THE DISTANCE BETWEEN THE ENDS OF J3 BARS IN THE TOP SLAB IS LESS THAN 2′-0″. DIMENSION L1 (NOT C1) SHALL BE USED WITH ALTERNATE J3 BARS. WHERE L1 IS EQUAL TO 18″, 22″ AND 28″ FOR #4, #5 AND #6 BARS, RESPECTIVELY. ADDITIONAL P1 BARS ARE REQUIRED WITH ALTERNATE J3 BARS WITH A LENGTH EQUAL TO A1 BARS, AND SIZE AND SPACING EQUAL TO J3 BARS. NO ADDITIONAL PAYMENT WILL BE MADE FOR THIS SUBSTITUTION.

GENERAL NOTES:

IF DESIGN FILL IS BETWEEN TABULATED DESIGN FILLS, USE THE NEXT GREATER TABULATED DESIGN FILL, EXCEPT FOR DESIGN FILLS BETWEEN 2 FEET AND 4 FEET. FOR DESIGN FILLS BETWEEN 2 FEET AND 4 FEET USE THE GREATER MEMBER THICKNESS, AREA OF REINFORCEMENT AND BAR DIMENSIONS FROM THE 2 FEET AND 4 FEET TABULATED DESIGN FILLS. AREA OF REINFORCEMENT EQUALS BAR AREA PER FOOT SPACING.

SPECIAL DESIGNS ARE REQUIRED WHEN THE DESIGN FILL IS LESS THAN 1 FOOT OR GREATER THAN 50 FEET.

DIMENSIONS ARE IN INCHES UNLESS OTHERWISE SPECIFIED.

DESIGN FILLS ARE MEASURED FROM THE TOP OF TOP SLAB TO THE TOP OF EARTH FILL OR ROADWAY.

CULVERTS MEET STRENGTH AND SERVICEABILITY REQUIREMENTS FOR THE DESIGN VEHICULAR LIVE LOAD HL-93 MINUS THE LANE LOAD.


MISSOURI HIGHWAYS AND TRANSPORTATION COMMISSION
105 WEST CAPITOL
JEFFERSON CITY, MO 65102
1-888-ASK-MODOT (1-888-275-6636)


STATE OF MISSOURI
DENNIS W. HECKMAN
NUMBER PE-27141
PROFESSIONAL ENGINEER
THIS SHEET HAS BEEN SIGNED, SEALED AND DATED ELECTRONICALLY.

# CONCRETE SINGLE BOX CULVERT

MEMBER THICKNESS
BAR SIZE, SPACING & DIMENSIONS

SPAN (S): 5 FEET
HEIGHT (HT): 3 THRU 8 FEET

DATE EFFECTIVE: 04/01/2011
DATE PREPARED: 4/18/2011

703.17

SHEET NO.
3 OF 14

IF A SEAL IS PRESENT ON THIS SHEET IT HAS BEEN ELECTRONICALLY SEALED AND DATED.

## SPAN (S) = 6 FT  HEIGHT (HT) = 3 FT OR 4 FT OR 5 FT

| DESIGN FILL | MEMBER THICKNESS | | | TOP SLAB BARS | | | | | | | | | BOTTOM SLAB BARS | | | | | | | | | WALL BARS | | |
|---|---|---|---|---|---|---|---|---|---|---|---|---|---|---|---|---|---|---|---|---|---|---|---|---|
| | | | | A1 BARS | | J3 BARS | | | | | | | A2 BARS | | J4 BARS | | | | | | | B2 BARS | | |
| | TS | BS | TX | SIZE | SPA. | SIZE | SPA. | C1 | K2 | | | | SIZE | SPA. | SIZE | SPA. | C4 | K3 | | | | SIZE | SPA. | G1 |
| | | | | | | | | | HT=3' | HT=4' | HT=5' | | | | | | | HT=3' | HT=4' | HT=5' | | | | |
| 1 FT | 10 | 8 | 8 | 5 | 8 | 4 | 9 | 51.3 | 26.5 | 33.0 | 39.4 | | 5 | 8 | 5 | 6 | 41.6 | 40 | 52 | 64 | | 5 | 12 | 12 |
| 2 FT | 11 | 8 | 8 | 5 | 7.5 | 4 | 9.5 | 51.3 | 27.0 | 33.5 | 40.0 | | 5 | 8 | 6 | 7.5 | 36.0 | 40 | 52 | 64 | | 5 | 12 | 12 |
| 4 FT | 8 | 8 | 8 | 4 | 6.5 | 4 | 7.5 | 32.8 | 24.5 | 30.6 | 36.9 | | 5 | 8.5 | 4 | 6.5 | 32.0 | 40 | 52 | 64 | | 5 | 12 | 0 |
| 6 FT | 8 | 8 | 8 | 4 | 7 | 4 | 8 | 30.4 | 24.5 | 30.6 | 36.9 | | 5 | 9 | 4 | 7 | 30.4 | 40 | 52 | 64 | | 5 | 12 | 0 |
| 8 FT | 8 | 8 | 8 | 4 | 6.5 | 4 | 7.5 | 29.6 | 24.5 | 30.6 | 36.9 | | 5 | 8.5 | 4 | 6.5 | 29.6 | 40 | 52 | 64 | | 5 | 12 | 0 |
| 10 FT | 8 | 8 | 8 | 4 | 7 | 4 | 8 | 27.3 | 24.5 | 30.6 | 36.9 | | 4 | 6 | 4 | 7 | 27.3 | 40 | 52 | 64 | | 5 | 12 | 0 |
| 12 FT | 8 | 8 | 8 | 4 | 6 | 4 | 7 | 27.3 | 24.5 | 30.6 | 36.9 | | 5 | 8 | 4 | 6 | 27.3 | 40 | 52 | 64 | | 5 | 12 | 0 |
| 14 FT | 8 | 8 | 8 | 4 | 6 | 4 | 6 | 27.3 | 24.5 | 30.6 | 36.9 | | 5 | 8 | 5 | 6 | 27.3 | 40 | 52 | 64 | | 5 | 12 | 0 |
| 16 FT | 8 | 8 | 8 | 4 | 6 | 5 | 6 | 27.3 | 28.3 | 35.4 | 42.6 | | 5 | 8 | 6 | 7 | 30.4 | 40 | 52 | 64 | | 5 | 12 | 0 |
| 18 FT | 8 | 9 | 8 | 5 | 8.5 | 6 | 7.5 | 30.4 | 24.0 | 30.0 | 36.0 | | 5 | 7.5 | 4 | 6 | 26.4 | 41 | 53 | 65 | | 5 | 12 | 0 |
| 20 FT | 8 | 9 | 8 | 5 | 7.5 | 6 | 7.5 | 30.4 | 28.4 | 35.4 | 42.5 | | 5 | 7 | 5 | 6.5 | 26.4 | 41 | 53 | 65 | | 5 | 12 | 0 |
| 22 FT | 9 | 10 | 8 | 5 | 7.5 | 5 | 6.5 | 26.4 | 25.0 | 31.0 | 37.0 | | 5 | 7 | 4 | 6.5 | 25.6 | 42 | 54 | 66 | | 5 | 12 | 0 |
| 24 FT | 9 | 11 | 8 | 5 | 7 | 5 | 6.5 | 26.4 | 25.5 | 31.5 | 37.5 | | 5 | 6.5 | 4 | 7 | 24.8 | 43 | 55 | 67 | | 5 | 12 | 0 |
| 26 FT | 10 | 11 | 8 | 5 | 7 | 5 | 7.5 | 26.4 | 26.0 | 32.0 | 38.0 | | 5 | 6.5 | 4 | 6.5 | 25.6 | 43 | 55 | 67 | | 5 | 12 | 0 |
| 28 FT | 10 | 12 | 8 | 5 | 6.5 | 5 | 7.5 | 26.4 | 26.5 | 32.5 | 38.5 | | 5 | 6 | 4 | 7 | 24.8 | 44 | 56 | 68 | | 5 | 12 | 0 |
| 30 FT | 11 | 12 | 8 | 5 | 6.5 | 5 | 8.5 | 25.6 | 27.0 | 33.0 | 39.0 | | 5 | 6 | 4 | 6 | 24.8 | 44 | 56 | 68 | | 5 | 12 | 0 |
| 32 FT | 11 | 13 | 8 | 5 | 6 | 5 | 8 | 25.6 | 27.5 | 33.5 | 39.5 | | 5 | 6 | 4 | 7 | 24.8 | 45 | 57 | 69 | | 5 | 12 | 0 |
| 34 FT | 12 | 13 | 8 | 5 | 6 | 5 | 8.5 | 25.6 | 28.0 | 34.0 | 40.0 | | 5 | 6 | 4 | 6 | 24.8 | 45 | 57 | 69 | | 5 | 12 | 0 |
| 36 FT | 12 | 14 | 8 | 6 | 8 | 5 | 8.5 | 25.6 | 28.5 | 34.5 | 40.5 | | 6 | 8 | 4 | 6.5 | 24.8 | 46 | 58 | 70 | | 5 | 12 | 0 |
| 38 FT | 13 | 14 | 8 | 6 | 8 | 5 | 8.5 | 24.8 | 29.0 | 35.0 | 41.0 | | 6 | 8 | 4 | 6 | 24.8 | 46 | 58 | 70 | | 5 | 12 | 0 |
| 40 FT | 13 | 14 | 8 | 6 | 7.5 | 5 | 8.5 | 24.8 | 29.0 | 35.0 | 41.0 | | 6 | 7.5 | 5 | 9 | 24.8 | 46 | 58 | 70 | | 5 | 12 | 0 |
| 42 FT | 14 | 15 | 8 | 6 | 8 | 5 | 8.5 | 24.8 | 30.0 | 36.0 | 42.0 | | 6 | 7.5 | 4 | 6 | 24.8 | 47 | 59 | 71 | | 5 | 12 | 0 |
| 44 FT | 14 | 15 | 8 | 6 | 7.5 | 5 | 8.5 | 24.8 | 30.0 | 36.0 | 42.0 | | 6 | 7.5 | 5 | 8.5 | 24.8 | 47 | 59 | 71 | | 5 | 12 | 0 |
| 46 FT | 14 | 16 | 8 | 6 | 7 | 5 | 8.5 | 24.8 | 30.5 | 36.5 | 42.5 | | 6 | 7 | 4 | 6 | 24.8 | 48 | 60 | 72 | | 5 | 12 | 0 |
| 48 FT | 15 | 16 | 8 | 6 | 7 | 5 | 8 | 29.6 | 31.0 | 37.0 | 43.0 | | 6 | 7 | 5 | 8 | 25.6 | 48 | 60 | 72 | | 5 | 12 | 0 |
| 50 FT | 15 | 16 | 8 | 6 | 7 | 5 | 8 | 29.6 | 31.0 | 37.0 | 43.0 | | 6 | 7 | 5 | 8 | 24.8 | 48 | 60 | 72 | | 5 | 12 | 0 |

## SPAN (S) = 6 FT  HEIGHT (HT) = 6 FT OR 7 FT

| DESIGN FILL | MEMBER THICKNESS | | | TOP SLAB BARS | | | | | | | | | BOTTOM SLAB BARS | | | | | | | | | WALL BARS | | |
|---|---|---|---|---|---|---|---|---|---|---|---|---|---|---|---|---|---|---|---|---|---|---|---|---|
| | | | | A1 BARS | | J3 BARS | | | | | | | A2 BARS | | J4 BARS | | | | | | | B2 BARS | | |
| | TS | BS | TX | SIZE | SPA. | SIZE | SPA. | C1 | K2 | | | | SIZE | SPA. | SIZE | SPA. | C4 | K3 | | | | SIZE | SPA. | G1 |
| | | | | | | | | | HT=6' | HT=7' | | | | | | | | HT=6' | HT=7' | | | | | |
| 1 FT | 10 | 8 | 8 | 5 | 8 | 4 | 9.5 | 51.3 | 26.4 | 30.1 | | | 5 | 8 | 5 | 6 | 52.8 | 76 | 88 | | | 5 | 12 | 12 |
| 2 FT | 11 | 9 | 8 | 5 | 7.5 | 4 | 9.5 | 51.3 | 27.9 | 31.6 | | | 5 | 7.5 | 4 | 6.5 | 51.3 | 77 | 89 | | | 5 | 12 | 12 |
| 4 FT | 8 | 8 | 8 | 4 | 6 | 4 | 7 | 51.3 | 24.1 | 27.5 | | | 5 | 8 | 4 | 6 | 51.3 | 76 | 88 | | | 5 | 12 | 0 |
| 6 FT | 8 | 8 | 8 | 4 | 6.5 | 4 | 7.5 | 42.4 | 24.1 | 27.5 | | | 5 | 8 | 4 | 6 | 41.6 | 76 | 88 | | | 5 | 12 | 0 |
| 8 FT | 8 | 8 | 8 | 4 | 6.5 | 4 | 7 | 38.4 | 24.1 | 27.5 | | | 5 | 8 | 5 | 6.5 | 38.4 | 76 | 88 | | | 5 | 12 | 0 |
| 10 FT | 8 | 8 | 8 | 4 | 7 | 4 | 7.5 | 32.8 | 24.1 | 27.5 | | | 5 | 8.5 | 4 | 6 | 33.6 | 76 | 88 | | | 5 | 12 | 0 |
| 12 FT | 8 | 9 | 8 | 4 | 6 | 4 | 6 | 32.8 | 24.4 | 27.9 | | | 5 | 8 | 4 | 7 | 33.6 | 77 | 89 | | | 5 | 12 | 0 |
| 14 FT | 8 | 9 | 8 | 4 | 6 | 5 | 6.5 | 32.0 | 24.4 | 27.9 | | | 5 | 7.5 | 4 | 6 | 32.8 | 77 | 89 | | | 5 | 12 | 0 |
| 16 FT | 8 | 9 | 8 | 4 | 6 | 6 | 7.5 | 35.3 | 28.5 | 32.6 | | | 5 | 7.5 | 5 | 6.5 | 32.8 | 77 | 89 | | | 5 | 12 | 0 |
| 18 FT | 8 | 9 | 8 | 5 | 8.5 | 6 | 7.5 | 34.4 | 28.5 | 32.6 | | | 5 | 7.5 | 6 | 7.5 | 35.3 | 77 | 89 | | | 5 | 12 | 0 |
| 20 FT | 8 | 9 | 8 | 5 | 7.5 | 6 | 7.5 | 34.4 | 28.5 | 32.6 | | | 5 | 6.5 | 6 | 7 | 35.3 | 77 | 89 | | | 5 | 12 | 0 |
| 22 FT | 9 | 10 | 8 | 5 | 7.5 | 5 | 6 | 32.0 | 25.8 | 29.4 | | | 5 | 7 | 5 | 6 | 32.8 | 78 | 90 | | | 5 | 12 | 0 |
| 24 FT | 9 | 11 | 8 | 5 | 7 | 6 | 7 | 34.4 | 29.6 | 33.6 | | | 5 | 6.5 | 5 | 6.5 | 32.8 | 79 | 91 | | | 5 | 12 | 0 |
| 26 FT | 10 | 11 | 8 | 5 | 6.5 | 5 | 6 | 32.0 | 30.8 | 35.0 | | | 5 | 6.5 | 5 | 6 | 32.8 | 79 | 91 | | | 5 | 11 | 0 |
| 28 FT | 10 | 12 | 8 | 5 | 6.5 | 6 | 7 | 34.4 | 30.3 | 34.4 | | | 5 | 6 | 5 | 6.5 | 33.6 | 80 | 92 | | | 5 | 10.5 | 0 |
| 30 FT | 11 | 12 | 8 | 5 | 6.5 | 5 | 6 | 32.0 | 31.5 | 35.8 | | | 5 | 6 | 5 | 6 | 33.6 | 80 | 92 | | | 5 | 9.5 | 0 |
| 32 FT | 11 | 13 | 8 | 5 | 6 | 6 | 7 | 35.3 | 31.9 | 36.0 | | | 5 | 6 | 5 | 6 | 33.6 | 81 | 93 | | | 5 | 9.5 | 0 |
| 34 FT | 11 | 13 | 8 | 6 | 7.5 | 6 | 6.5 | 35.3 | 31.9 | 36.0 | | | 5 | 6 | 5 | 6 | 33.6 | 81 | 93 | | | 5 | 9.5 | 0 |
| 36 FT | 12 | 13 | 8 | 6 | 8 | 6 | 7 | 35.3 | 32.3 | 36.4 | | | 6 | 8 | 6 | 7 | 36.8 | 81 | 93 | | | 5 | 9.5 | 0 |
| 38 FT | 12 | 14 | 8 | 6 | 8 | 6 | 6.5 | 35.3 | 32.5 | 36.8 | | | 6 | 8 | 5 | 6 | 34.4 | 82 | 94 | | | 5 | 9.5 | 0 |
| 40 FT | 13 | 14 | 9 | 6 | 8 | 5 | 6 | 32.4 | 33.9 | 38.1 | | | 6 | 8 | 5 | 6.5 | 34.0 | 82 | 94 | | | 5 | 8.5 | 0 |
| 42 FT | 13 | 15 | 10 | 6 | 8 | 5 | 7 | 32.8 | 33.3 | 37.5 | | | 6 | 7.5 | 5 | 7.5 | 34.5 | 83 | 95 | | | 5 | 9 | 0 |
| 44 FT | 14 | 15 | 10 | 6 | 8 | 5 | 7.5 | 32.8 | 34.5 | 38.9 | | | 6 | 7.5 | 5 | 7.5 | 34.5 | 83 | 95 | | | 5 | 8.5 | 0 |
| 46 FT | 14 | 16 | 11 | 6 | 7.5 | 5 | 7 | 33.3 | 34.9 | 39.3 | | | 6 | 7 | 5 | 7 | 34.9 | 84 | 96 | | | 5 | 9 | 0 |
| 48 FT | 14 | 16 | 11 | 6 | 7.5 | 5 | 6.5 | 33.3 | 34.9 | 39.3 | | | 6 | 7 | 5 | 7 | 34.9 | 84 | 96 | | | 5 | 9 | 0 |
| 50 FT | 15 | 16 | 11 | 6 | 7.5 | 5 | 7 | 38.1 | 35.3 | 39.6 | | | 6 | 7 | 5 | 7 | 34.9 | 84 | 96 | | | 5 | 8.5 | 0 |

## SPAN (S) = 6 FT  HEIGHT (HT) = 8 FT OR 9 FT

| DESIGN FILL | MEMBER THICKNESS | | | TOP SLAB BARS | | | | | | | BOTTOM SLAB BARS | | | | | | | WALL BARS | | |
|---|---|---|---|---|---|---|---|---|---|---|---|---|---|---|---|---|---|---|---|---|
| | | | | A1 BARS | | J3 BARS | | | | | A2 BARS | | J4 BARS | | | | | B2 BARS | | |
| | TS | BS | TX | SIZE | SPA. | SIZE | SPA. | C1 | K2 | | SIZE | SPA. | SIZE | SPA. | C4 | K3 | | SIZE | SPA. | G1 |
| | | | | | | | | | HT=8' | HT=9' | | | | | | HT=8' | HT=9' | | | |
| 1 FT | 10 | 10 | 8 | 5 | 8 | 4 | 7 | 51.3 | 26.6 | 29.5 | 5 | 7 | 4 | 6.5 | 51.3 | 102 | 114 | 5 | 12 | 12 |
| 2 FT | 11 | 10 | 8 | 5 | 7.5 | 4 | 7 | 51.3 | 28.0 | 31.0 | 5 | 7 | 4 | 6 | 51.3 | 102 | 114 | 5 | 12 | 12 |
| 4 FT | 8 | 9 | 9 | 4 | 6 | 4 | 6.5 | 51.9 | 24.9 | 27.6 | 5 | 8 | 4 | 6.5 | 51.9 | 101 | 113 | 5 | 12 | 0 |
| 6 FT | 8 | 9 | 9 | 4 | 6.5 | 4 | 6.5 | 51.9 | 24.9 | 27.6 | 5 | 8.5 | 4 | 6 | 51.9 | 101 | 113 | 5 | 12 | 0 |
| 8 FT | 8 | 10 | 9 | 4 | 6.5 | 4 | 6 | 51.9 | 25.1 | 27.9 | 4 | 6 | 4 | 6 | 51.9 | 102 | 114 | 5 | 11.5 | 0 |
| 10 FT | 8 | 10 | 9 | 4 | 7.5 | 4 | 6.5 | 45.4 | 25.1 | 27.9 | 4 | 6.5 | 4 | 6.5 | 51.9 | 102 | 114 | 5 | 12 | 0 |
| 12 FT | 8 | 10 | 9 | 4 | 6 | 5 | 6.5 | 43.8 | 25.1 | 27.9 | 5 | 8.5 | 4 | 6 | 51.9 | 102 | 114 | 5 | 11.5 | 0 |
| 14 FT | 8 | 10 | 9 | 4 | 6 | 5 | 6 | 42.1 | 26.1 | 29.0 | 5 | 7.5 | 5 | 6.5 | 54.3 | 102 | 114 | 5 | 10 | 0 |
| 16 FT | 8 | 10 | 9 | 4 | 6 | 6 | 7 | 44.5 | 28.4 | 31.5 | 5 | 7 | 5 | 6 | 54.3 | 102 | 114 | 5 | 9.5 | 0 |
| 18 FT | 8 | 10 | 9 | 5 | 9 | 6 | 7 | 43.8 | 29.4 | 32.6 | 5 | 7 | 6 | 7 | 55.9 | 102 | 114 | 5 | 8.5 | 0 |
| 20 FT | 9 | 10 | 9 | 5 | 8.5 | 5 | 6 | 43.8 | 29.8 | 33.0 | 5 | 7 | 6 | 6.5 | 56.8 | 102 | 114 | 5 | 8.5 | 0 |
| 22 FT | 9 | 11 | 9 | 5 | 8 | 5 | 6 | 42.9 | 30.0 | 33.3 | 5 | 6.5 | 6 | 6.5 | 55.9 | 103 | 115 | 5 | 8.5 | 0 |
| 24 FT | 10 | 11 | 9 | 5 | 7.5 | 5 | 6 | 45.4 | 30.3 | 33.5 | 5 | 6.5 | 6 | 6 | 55.9 | 103 | 115 | 5 | 8.5 | 0 |
| 26 FT | 10 | 11 | 9 | 5 | 7 | 5 | 6 | 44.5 | 30.3 | 33.5 | 5 | 6 | 6 | 6 | 55.9 | 103 | 115 | 5 | 8.5 | 0 |
| 28 FT | 10 | 12 | 9 | 5 | 6.5 | 6 | 7 | 47.0 | 31.6 | 35.0 | 5 | 6 | 6 | 6 | 55.9 | 104 | 116 | 5 | 8 | 0 |
| 30 FT | 11 | 12 | 9 | 5 | 6.5 | 6 | 6.5 | 49.4 | 35.4 | 39.0 | 5 | 6 | 6 | 6 | 55.9 | 104 | 116 | 5 | 8 | 0 |
| 32 FT | 11 | 13 | 10 | 5 | 6.5 | 6 | 8 | 46.8 | 32.3 | 35.5 | 5 | 6 | 6 | 6.5 | 56.6 | 105 | 117 | 5 | 8 | 0 |
| 34 FT | 12 | 13 | 11 | 5 | 6.5 | 5 | 6.5 | 44.0 | 32.5 | 35.9 | 5 | 6 | 5 | 6 | 49.8 | 105 | 117 | 5 | 7.5 | 0 |
| 36 FT | 12 | 13 | 11 | 5 | 6 | 5 | 6.5 | 44.0 | 32.5 | 35.9 | 6 | 8 | 6 | 7.5 | 52.3 | 105 | 117 | 5 | 7.5 | 0 |
| 38 FT | 12 | 14 | 12 | 5 | 6 | 5 | 6 | 42.0 | 32.8 | 36.1 | 6 | 8 | 5 | 6 | 48.8 | 106 | 118 | 5 | 7 | 0 |
| 40 FT | 13 | 14 | 12 | 5 | 6 | 5 | 6 | 44.5 | 33.0 | 36.4 | 6 | 8 | 5 | 6 | 48.8 | 106 | 118 | 5 | 7 | 0 |
| 42 FT | 13 | 15 | 12 | 5 | 6 | 5 | 6 | 43.6 | 33.4 | 36.6 | 6 | 7.5 | 5 | 6 | 52.1 | 107 | 119 | 5 | 7 | 0 |
| 44 FT | 14 | 15 | 13 | 5 | 6 | 5 | 6 | 44.3 | 34.8 | 38.3 | 6 | 7.5 | 5 | 6 | 48.5 | 107 | 119 | 5 | 6.5 | 0 |
| 46 FT | 14 | 15 | 13 | 6 | 8 | 5 | 6 | 44.3 | 34.8 | 38.3 | 6 | 7.5 | 6 | 8 | 51.0 | 107 | 119 | 5 | 6.5 | 0 |
| 48 FT | 14 | 16 | 13 | 6 | 8 | 5 | 6 | 44.3 | 35.1 | 38.6 | 6 | 7 | 5 | 6 | 50.1 | 108 | 120 | 5 | 6.5 | 0 |
| 50 FT | 15 | 16 | 13 | 6 | 8 | 5 | 6 | 51.0 | 35.4 | 38.9 | 6 | 7 | 6 | 8 | 53.5 | 108 | 120 | 5 | 6.5 | 0 |

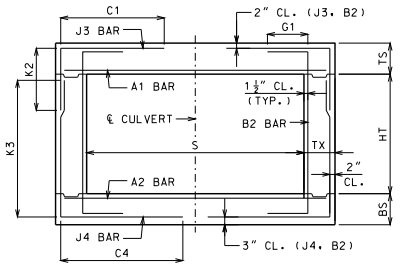


BAR DIMENSIONS DIAGRAM
SYMMETRICAL ABOUT ℄ CULVERT.

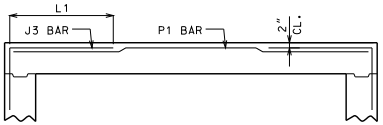


ALTERNATE J3 BAR

AT CONTRACTOR'S OPTION, ALTERNATE J3 BARS MAY BE USED WHEN THE DISTANCE BETWEEN THE ENDS OF J3 BARS IN THE TOP SLAB IS LESS THAN 2'-0". DIMENSION L1 (NOT C1) SHALL BE USED WITH ALTERNATE J3 BARS. WHERE L1 IS EQUAL TO 18", 22" AND 28" FOR #4, #5 AND #6 BARS, RESPECTIVELY. ADDITIONAL P1 BARS ARE REQUIRED WITH ALTERNATE J3 BARS WITH A LENGTH EQUAL TO A1 BARS, AND SIZE AND SPACING EQUAL TO J3 BARS. NO ADDITIONAL PAYMENT WILL BE MADE FOR THIS SUBSTITUTION.

GENERAL NOTES:

IF DESIGN FILL IS BETWEEN TABULATED DESIGN FILLS, USE THE NEXT GREATER TABULATED DESIGN FILL, EXCEPT FOR DESIGN FILLS BETWEEN 2 FEET AND 4 FEET. FOR DESIGN FILLS BETWEEN 2 FEET AND 4 FEET USE THE GREATER MEMBER THICKNESS, AREA OF REINFORCEMENT AND BAR DIMENSIONS FROM THE 2 FEET AND 4 FEET TABULATED DESIGN FILLS. AREA OF REINFORCEMENT EQUALS BAR AREA PER FOOT SPACING.

SPECIAL DESIGNS ARE REQUIRED WHEN THE DESIGN FILL IS LESS THAN 1 FOOT OR GREATER THAN 50 FEET.

DIMENSIONS ARE IN INCHES UNLESS OTHERWISE SPECIFIED.

DESIGN FILLS ARE MEASURED FROM THE TOP OF TOP SLAB TO THE TOP OF EARTH FILL OR ROADWAY.

CULVERTS MEET STRENGTH AND SERVICEABILITY REQUIREMENTS FOR THE DESIGN VEHICULAR LIVE LOAD HL-93 MINUS THE LANE LOAD.


MISSOURI HIGHWAYS AND TRANSPORTATION COMMISSION
105 WEST CAPITOL
JEFFERSON CITY, MO 65102
1-888-ASK-MODOT (1-888-275-6636)


STATE OF MISSOURI
DENNIS W. HECKMAN
NUMBER PE-27141
PROFESSIONAL ENGINEER
THIS SHEET HAS BEEN SIGNED, SEALED AND DATED ELECTRONICALLY.

# CONCRETE SINGLE BOX CULVERT

MEMBER THICKNESS
BAR SIZE, SPACING & DIMENSIONS

SPAN (S): 6 FEET
HEIGHT (HT): 3 THRU 9 FEET

DATE EFFECTIVE: 04/01/2011
DATE PREPARED: 4/18/2011

703.17

SHEET NO.
4 OF 14

IF A SEAL IS PRESENT ON THIS SHEET IT HAS BEEN ELECTRONICALLY SEALED AND DATED.

## SPAN (S) = 7 FT  HEIGHT (HT) = 4 FT OR 5 FT OR 6 FT

| DESIGN FILL | MEMBER THICKNESS | | | TOP SLAB BARS | | | | | | | | BOTTOM SLAB BARS | | | | | | | | WALL BARS | | |
|---|---|---|---|---|---|---|---|---|---|---|---|---|---|---|---|---|---|---|---|---|---|---|
| | | | | A1 BARS | | J3 BARS | | | | | | A2 BARS | | J4 BARS | | | | | | B2 BARS | | |
| | TS | BS | TX | SIZE | SPA. | SIZE | SPA. | C1 | K2 | | | SIZE | SPA. | SIZE | SPA. | C4 | K3 | | | SIZE | SPA. | G1 |
| | | | | | | | | | HT=4′ | HT=5′ | HT=6′ | | | | | | HT=4′ | HT=5′ | HT=6′ | | | |
| 1 FT | 11 | 9 | 8 | 5 | 7.5 | 4 | 9 | 57.0 | 27.1 | 32.3 | 37.4 | 5 | 7.5 | 4 | 6 | 54.3 | 53 | 65 | 77 | 5 | 12 | 12 |
| 2 FT | 11 | 9 | 8 | 5 | 7.5 | 4 | 9 | 57.0 | 27.1 | 32.3 | 37.4 | 5 | 7.5 | 5 | 7 | 43.3 | 53 | 65 | 77 | 5 | 12 | 12 |
| 4 FT | 8 | 8 | 8 | 4 | 6 | 4 | 6 | 36.8 | 24.3 | 29.1 | 34.0 | 5 | 8 | 5 | 6 | 35.9 | 52 | 64 | 76 | 5 | 12 | 0 |
| 6 FT | 8 | 8 | 8 | 4 | 6 | 4 | 6 | 33.1 | 24.3 | 29.1 | 34.0 | 5 | 8 | 5 | 6 | 33.1 | 52 | 64 | 76 | 5 | 12 | 0 |
| 8 FT | 8 | 9 | 8 | 4 | 6 | 5 | 6.5 | 32.3 | 24.0 | 28.8 | 33.6 | 5 | 7.5 | 4 | 6.5 | 32.3 | 53 | 65 | 77 | 5 | 12 | 0 |
| 10 FT | 8 | 9 | 8 | 4 | 6 | 4 | 6 | 30.4 | 24.0 | 28.8 | 33.6 | 5 | 7.5 | 4 | 7.5 | 29.5 | 53 | 65 | 77 | 5 | 12 | 0 |
| 12 FT | 8 | 9 | 8 | 4 | 6 | 5 | 6 | 30.4 | 24.0 | 28.8 | 33.6 | 5 | 7.5 | 4 | 6 | 28.5 | 53 | 65 | 77 | 5 | 12 | 0 |
| 14 FT | 8 | 9 | 8 | 5 | 8 | 6 | 7.5 | 33.1 | 28.3 | 33.9 | 39.5 | 5 | 7 | 5 | 6.5 | 28.5 | 53 | 65 | 77 | 5 | 12 | 0 |
| 16 FT | 8 | 9 | 8 | 5 | 7 | 6 | 7 | 33.1 | 28.3 | 33.9 | 39.5 | 5 | 6.5 | 6 | 7.5 | 31.3 | 53 | 65 | 77 | 5 | 12 | 0 |
| 18 FT | 9 | 10 | 8 | 5 | 7 | 5 | 6.5 | 28.5 | 25.4 | 30.4 | 35.3 | 5 | 6 | 5 | 7 | 28.5 | 54 | 66 | 78 | 5 | 12 | 0 |
| 20 FT | 9 | 10 | 8 | 5 | 6 | 5 | 6 | 28.5 | 29.1 | 34.8 | 40.4 | 6 | 8 | 5 | 6 | 27.6 | 54 | 66 | 78 | 5 | 12 | 0 |
| 22 FT | 10 | 11 | 8 | 5 | 6 | 5 | 7 | 28.5 | 26.3 | 31.1 | 36.1 | 6 | 8 | 5 | 7.5 | 27.6 | 55 | 67 | 79 | 5 | 12 | 0 |
| 24 FT | 10 | 12 | 8 | 6 | 8 | 5 | 6 | 28.5 | 26.0 | 30.8 | 35.6 | 6 | 8 | 5 | 8.5 | 26.6 | 56 | 68 | 80 | 5 | 12 | 0 |
| 26 FT | 11 | 13 | 8 | 6 | 8 | 5 | 7 | 27.6 | 27.5 | 32.4 | 37.3 | 6 | 8 | 5 | 8.5 | 26.6 | 57 | 69 | 81 | 5 | 12 | 0 |
| 28 FT | 12 | 13 | 8 | 6 | 7.5 | 5 | 8 | 27.6 | 28.5 | 33.6 | 38.6 | 6 | 7.5 | 5 | 8.5 | 27.6 | 57 | 69 | 81 | 5 | 12 | 0 |
| 30 FT | 12 | 14 | 8 | 6 | 7.5 | 5 | 7 | 27.6 | 28.3 | 33.3 | 38.1 | 6 | 7.5 | 5 | 8.5 | 26.6 | 58 | 70 | 82 | 5 | 12 | 0 |
| 32 FT | 13 | 14 | 8 | 6 | 7 | 5 | 8 | 26.6 | 29.4 | 34.5 | 39.5 | 6 | 7 | 5 | 8.5 | 27.6 | 58 | 70 | 82 | 5 | 12 | 0 |
| 34 FT | 13 | 15 | 8 | 6 | 7 | 5 | 7 | 27.6 | 29.1 | 34.0 | 39.0 | 6 | 7 | 5 | 8.5 | 26.6 | 59 | 71 | 83 | 5 | 12 | 0 |
| 36 FT | 14 | 15 | 8 | 6 | 6.5 | 5 | 7.5 | 26.6 | 30.3 | 35.3 | 40.4 | 6 | 7 | 5 | 8.5 | 27.6 | 59 | 71 | 83 | 5 | 12 | 0 |
| 38 FT | 14 | 16 | 8 | 6 | 6.5 | 5 | 7 | 26.6 | 30.6 | 35.8 | 40.8 | 6 | 7 | 5 | 8 | 26.6 | 60 | 72 | 84 | 5 | 11.5 | 0 |
| 40 FT | 15 | 16 | 8 | 6 | 6.5 | 5 | 7.5 | 32.3 | 31.1 | 36.1 | 41.1 | 6 | 6.5 | 5 | 8 | 27.6 | 60 | 72 | 84 | 5 | 10.5 | 0 |
| 42 FT | 15 | 17 | 8 | 6 | 6 | 5 | 7 | 32.3 | 35.3 | 40.9 | 46.5 | 6 | 6.5 | 5 | 7 | 27.6 | 61 | 73 | 85 | 5 | 10 | 0 |
| 44 FT | 16 | 17 | 8 | 6 | 6 | 5 | 7 | 32.3 | 36.5 | 42.3 | 48.0 | 6 | 6.5 | 5 | 7 | 27.6 | 61 | 73 | 85 | 5 | 9.5 | 0 |
| 46 FT | 16 | 18 | 8 | 6 | 6 | 5 | 6 | 32.3 | 36.3 | 41.9 | 47.5 | 6 | 6.5 | 5 | 6.5 | 27.6 | 62 | 74 | 86 | 5 | 9.5 | 0 |
| 48 FT | 17 | 18 | 9 | 6 | 6 | 5 | 7.5 | 32.5 | 33.5 | 38.8 | 43.9 | 6 | 6.5 | 5 | 8 | 27.9 | 62 | 74 | 86 | 5 | 10 | 0 |
| 50 FT | 17 | 19 | 9 | 6 | 6 | 5 | 7 | 32.5 | 37.1 | 42.8 | 48.4 | 6 | 6 | 5 | 7.5 | 27.9 | 63 | 75 | 87 | 5 | 9 | 0 |

## SPAN (S) = 7 FT  HEIGHT (HT) = 7 FT OR 8 FT

| DESIGN FILL | MEMBER THICKNESS | | | TOP SLAB BARS | | | | | | | BOTTOM SLAB BARS | | | | | | | | WALL BARS | | |
|---|---|---|---|---|---|---|---|---|---|---|---|---|---|---|---|---|---|---|---|---|---|
| | | | | A1 BARS | | J3 BARS | | | | | A2 BARS | | J4 BARS | | | | | | B2 BARS | | |
| | TS | BS | TX | SIZE | SPA. | SIZE | SPA. | C1 | K2 | | SIZE | SPA. | SIZE | SPA. | C4 | K3 | | SIZE | SPA. | G1 |
| | | | | | | | | | HT=7′ | HT=8′ | | | | | | HT=7′ | HT=8′ | | | |
| 1 FT | 11 | 9 | 8 | 5 | 7.5 | 4 | 8 | 57.0 | 27.8 | 31.1 | 5 | 7.5 | 5 | 6.5 | 58.9 | 89 | 101 | 5 | 12 | 12 |
| 2 FT | 11 | 9 | 8 | 5 | 7.5 | 4 | 7.5 | 57.0 | 27.8 | 31.1 | 5 | 7.5 | 5 | 6 | 58.9 | 89 | 101 | 5 | 12 | 12 |
| 4 FT | 8 | 9 | 8 | 4 | 6 | 5 | 6.5 | 58.9 | 24.0 | 27.0 | 5 | 7.5 | 4 | 6 | 57.0 | 89 | 101 | 5 | 12 | 0 |
| 6 FT | 8 | 9 | 8 | 4 | 6 | 5 | 6.5 | 46.0 | 25.0 | 28.1 | 5 | 7.5 | 5 | 6.5 | 50.6 | 89 | 101 | 5 | 12 | 0 |
| 8 FT | 8 | 9 | 8 | 4 | 6 | 5 | 6 | 41.4 | 25.0 | 28.1 | 5 | 7.5 | 5 | 6.5 | 44.1 | 89 | 101 | 5 | 12 | 0 |
| 10 FT | 8 | 9 | 8 | 4 | 6 | 5 | 6.5 | 35.9 | 25.0 | 28.1 | 5 | 7.5 | 5 | 6.5 | 36.8 | 89 | 101 | 5 | 12 | 0 |
| 12 FT | 8 | 9 | 8 | 4 | 6 | 6 | 7.5 | 38.6 | 28.8 | 32.4 | 5 | 7.5 | 5 | 6 | 36.8 | 89 | 101 | 5 | 12 | 0 |
| 14 FT | 8 | 9 | 8 | 5 | 8 | 6 | 7.5 | 37.8 | 28.8 | 32.4 | 5 | 7 | 6 | 6.5 | 38.6 | 89 | 101 | 5 | 12 | 0 |
| 16 FT | 8 | 9 | 8 | 5 | 7 | 6 | 7 | 37.8 | 32.6 | 36.8 | 5 | 6 | 6 | 6 | 38.6 | 89 | 101 | 5 | 12 | 0 |
| 18 FT | 9 | 10 | 8 | 5 | 6.5 | 6 | 7 | 37.8 | 29.4 | 33.0 | 5 | 6 | 6 | 6.5 | 38.6 | 90 | 102 | 5 | 12 | 0 |
| 20 FT | 9 | 10 | 8 | 5 | 6 | 6 | 7 | 36.8 | 33.4 | 37.4 | 6 | 7.5 | 6 | 6 | 38.6 | 90 | 102 | 5 | 11 | 0 |
| 22 FT | 10 | 11 | 9 | 5 | 6 | 5 | 6 | 34.4 | 30.0 | 33.6 | 6 | 8 | 5 | 6 | 35.4 | 91 | 103 | 5 | 12 | 0 |
| 24 FT | 10 | 12 | 9 | 6 | 8.5 | 5 | 6 | 34.4 | 30.3 | 33.9 | 6 | 8 | 5 | 6.5 | 36.3 | 92 | 104 | 5 | 11 | 0 |
| 26 FT | 11 | 13 | 9 | 6 | 8 | 6 | 7.5 | 38.1 | 31.9 | 35.6 | 6 | 8 | 5 | 6.5 | 36.3 | 93 | 105 | 5 | 10 | 0 |
| 28 FT | 11 | 13 | 9 | 6 | 7 | 6 | 7 | 37.3 | 31.9 | 35.6 | 6 | 7.5 | 5 | 6 | 36.3 | 93 | 105 | 5 | 9.5 | 0 |
| 30 FT | 12 | 13 | 9 | 6 | 7.5 | 6 | 7.5 | 37.3 | 33.3 | 37.1 | 6 | 7 | 6 | 7.5 | 39.0 | 93 | 105 | 5 | 8.5 | 0 |
| 32 FT | 12 | 14 | 9 | 6 | 6.5 | 6 | 6.5 | 37.3 | 32.5 | 36.3 | 6 | 7 | 5 | 6 | 36.3 | 94 | 106 | 5 | 8.5 | 0 |
| 34 FT | 13 | 14 | 9 | 6 | 7 | 6 | 7 | 38.1 | 33.9 | 37.8 | 6 | 7 | 6 | 7 | 39.0 | 94 | 106 | 5 | 8.5 | 0 |
| 36 FT | 14 | 15 | 10 | 6 | 7 | 5 | 6.5 | 34.8 | 34.5 | 38.4 | 6 | 7 | 5 | 7 | 36.6 | 95 | 107 | 5 | 8 | 0 |
| 38 FT | 14 | 16 | 11 | 6 | 7 | 5 | 6.5 | 36.1 | 34.9 | 38.8 | 6 | 7 | 5 | 7 | 37.0 | 96 | 108 | 5 | 8.5 | 0 |
| 40 FT | 15 | 16 | 11 | 6 | 7 | 5 | 6.5 | 40.9 | 35.3 | 39.0 | 6 | 7 | 5 | 7 | 37.0 | 96 | 108 | 5 | 8 | 0 |
| 42 FT | 15 | 17 | 11 | 6 | 6.5 | 5 | 6 | 40.9 | 35.5 | 39.4 | 6 | 7 | 5 | 7 | 37.0 | 97 | 109 | 5 | 7.5 | 0 |
| 44 FT | 16 | 17 | 12 | 6 | 6.5 | 5 | 6.5 | 41.3 | 37.0 | 40.9 | 6 | 6.5 | 5 | 6.5 | 37.5 | 97 | 109 | 5 | 8 | 0 |
| 46 FT | 16 | 18 | 12 | 6 | 6.5 | 5 | 6.5 | 41.3 | 36.1 | 40.0 | 6 | 6.5 | 5 | 6.5 | 37.5 | 98 | 110 | 5 | 8 | 0 |
| 48 FT | 17 | 18 | 12 | 6 | 6.5 | 5 | 6.5 | 41.3 | 37.6 | 41.6 | 6 | 6.5 | 5 | 6.5 | 38.4 | 98 | 110 | 5 | 7.5 | 0 |
| 50 FT | 17 | 18 | 12 | 6 | 6 | 5 | 6 | 41.3 | 37.6 | 41.6 | 6 | 6 | 5 | 6.5 | 38.4 | 98 | 110 | 5 | 7 | 0 |

## SPAN (S) = 7 FT  HEIGHT (HT) = 9 FT OR 10 FT

| DESIGN FILL | MEMBER THICKNESS | | | TOP SLAB BARS | | | | | | | BOTTOM SLAB BARS | | | | | | | WALL BARS | | |
|---|---|---|---|---|---|---|---|---|---|---|---|---|---|---|---|---|---|---|---|---|
| | | | | A1 BARS | | J3 BARS | | | | | A2 BARS | | J4 BARS | | | | | B2 BARS | | |
| | TS | BS | TX | SIZE | SPA. | SIZE | SPA. | C1 | K2 | | SIZE | SPA. | SIZE | SPA. | C4 | K3 | | SIZE | SPA. | G1 |
| | | | | | | | | | HT=9′ | HT=10′ | | | | | | HT=9′ | HT=10′ | | | |
| 1 FT | 11 | 10 | 8 | 5 | 7.5 | 4 | 6 | 57.0 | 27.3 | 29.9 | 5 | 7 | 5 | 6.5 | 58.9 | 114 | 126 | 5 | 12 | 12 |
| 2 FT | 11 | 10 | 8 | 5 | 7.5 | 5 | 8.5 | 58.9 | 28.5 | 31.3 | 5 | 7 | 5 | 6 | 58.9 | 114 | 126 | 5 | 11 | 12 |
| 4 FT | 8 | 9 | 9 | 4 | 6 | 5 | 6 | 59.5 | 28.8 | 31.6 | 5 | 7.5 | 5 | 6 | 59.5 | 113 | 125 | 5 | 10.5 | 0 |
| 6 FT | 8 | 10 | 9 | 4 | 6 | 5 | 6 | 59.5 | 29.0 | 31.9 | 5 | 7 | 5 | 6.5 | 59.5 | 114 | 126 | 5 | 10 | 0 |
| 8 FT | 8 | 10 | 9 | 4 | 6 | 6 | 7 | 62.3 | 29.0 | 31.9 | 5 | 7 | 5 | 6 | 59.5 | 114 | 126 | 5 | 9 | 0 |
| 10 FT | 8 | 10 | 9 | 4 | 6 | 5 | 6 | 46.5 | 26.6 | 29.3 | 5 | 7.5 | 5 | 6 | 59.5 | 114 | 126 | 5 | 10 | 0 |
| 12 FT | 8 | 11 | 9 | 4 | 6 | 6 | 7 | 47.4 | 25.6 | 28.1 | 5 | 7 | 5 | 6 | 59.5 | 115 | 127 | 5 | 9 | 0 |
| 14 FT | 8 | 11 | 9 | 5 | 8.5 | 6 | 7 | 46.5 | 29.3 | 32.1 | 5 | 6.5 | 6 | 7 | 62.3 | 115 | 127 | 5 | 8.5 | 0 |
| 16 FT | 9 | 11 | 9 | 5 | 8 | 5 | 6 | 46.5 | 29.5 | 32.4 | 5 | 6.5 | 6 | 6.5 | 62.3 | 115 | 127 | 5 | 8.5 | 0 |
| 18 FT | 9 | 11 | 9 | 5 | 7 | 6 | 7 | 48.4 | 30.8 | 33.8 | 5 | 6.5 | 6 | 6 | 64.1 | 115 | 127 | 5 | 8.5 | 0 |
| 20 FT | 10 | 11 | 9 | 5 | 7 | 6 | 7.5 | 50.3 | 31.0 | 34.0 | 5 | 6 | 6 | 6 | 60.5 | 115 | 127 | 5 | 8.5 | 0 |
| 22 FT | 10 | 12 | 9 | 5 | 6.5 | 6 | 6.5 | 49.3 | 31.3 | 34.3 | 5 | 6 | 6 | 6 | 62.3 | 116 | 128 | 5 | 8 | 0 |
| 24 FT | 11 | 12 | 9 | 5 | 6 | 6 | 7 | 51.1 | 35.3 | 38.6 | 6 | 8.5 | 6 | 6 | 64.1 | 116 | 128 | 5 | 7.5 | 0 |
| 26 FT | 11 | 13 | 10 | 5 | 6 | 6 | 7.5 | 48.9 | 33.0 | 36.1 | 5 | 6 | 6 | 6.5 | 60.1 | 117 | 129 | 5 | 8 | 0 |
| 28 FT | 12 | 13 | 11 | 5 | 6 | 5 | 6.5 | 45.6 | 32.0 | 35.0 | 6 | 8 | 6 | 7 | 54.1 | 117 | 129 | 5 | 7.5 | 0 |
| 30 FT | 12 | 14 | 11 | 6 | 8 | 5 | 6 | 45.6 | 32.3 | 35.3 | 6 | 8 | 6 | 7 | 56.0 | 118 | 130 | 5 | 7.5 | 0 |
| 32 FT | 13 | 14 | 12 | 6 | 8 | 5 | 6 | 46.1 | 33.8 | 36.9 | 6 | 7.5 | 6 | 8 | 52.8 | 118 | 130 | 5 | 7 | 0 |
| 34 FT | 13 | 15 | 12 | 6 | 8 | 5 | 6 | 45.1 | 34.0 | 37.1 | 6 | 7.5 | 6 | 8 | 55.6 | 119 | 131 | 5 | 7 | 0 |
| 36 FT | 14 | 15 | 12 | 6 | 7.5 | 6 | 8 | 49.9 | 35.6 | 38.9 | 6 | 7.5 | 6 | 7.5 | 54.8 | 119 | 131 | 5 | 7 | 0 |
| 38 FT | 14 | 16 | 13 | 6 | 7.5 | 5 | 6 | 45.6 | 34.6 | 37.8 | 6 | 7 | 6 | 8 | 54.4 | 120 | 132 | 5 | 6.5 | 0 |
| 40 FT | 15 | 16 | 13 | 6 | 7.5 | 6 | 8 | 55.3 | 36.1 | 39.4 | 6 | 7 | 6 | 7.5 | 54.4 | 120 | 132 | 5 | 6.5 | 0 |
| 42 FT | 15 | 17 | 13 | 6 | 7 | 6 | 7.5 | 55.3 | 36.5 | 39.8 | 6 | 7 | 6 | 7.5 | 56.3 | 121 | 133 | 5 | 6.5 | 0 |
| 44 FT | 16 | 17 | 14 | 6 | 7 | 6 | 8 | 55.9 | 38.1 | 41.5 | 6 | 7 | 6 | 7.5 | 53.9 | 121 | 133 | 5 | 6 | 0 |
| 46 FT | 16 | 17 | 14 | 6 | 7 | 6 | 7.5 | 55.9 | 38.1 | 41.5 | 6 | 6.5 | 6 | 7 | 53.9 | 121 | 133 | 5 | 6 | 0 |
| 48 FT | 16 | 18 | 14 | 6 | 6.5 | 6 | 7 | 55.9 | 37.0 | 40.3 | 6 | 6.5 | 6 | 7.5 | 55.9 | 122 | 134 | 5 | 6 | 0 |
| 50 FT | 17 | 18 | 15 | 6 | 6.5 | 6 | 8 | 56.4 | 41.4 | 45.0 | 6 | 6.5 | 6 | 7.5 | 53.5 | 122 | 134 | 6 | 8 | 0 |

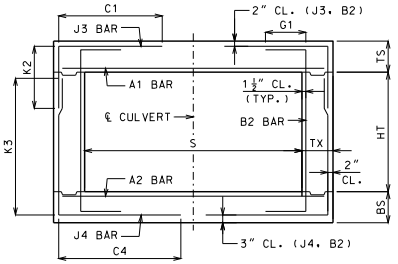


BAR DIMENSIONS DIAGRAM
SYMMETRICAL ABOUT ℄ CULVERT.

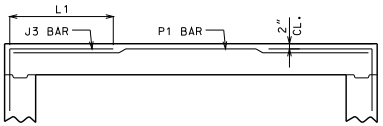


ALTERNATE J3 BAR

AT CONTRACTOR'S OPTION, ALTERNATE J3 BARS MAY BE USED WHEN THE DISTANCE BETWEEN THE ENDS OF J3 BARS IN THE TOP SLAB IS LESS THAN 2′-0″. DIMENSION L1 (NOT C1) SHALL BE USED WITH ALTERNATE J3 BARS. WHERE L1 IS EQUAL TO 18″, 22″ AND 28″ FOR #4, #5 AND #6 BARS, RESPECTIVELY. ADDITIONAL P1 BARS ARE REQUIRED WITH ALTERNATE J3 BARS WITH A LENGTH EQUAL TO A1 BARS, AND SIZE AND SPACING EQUAL TO J3 BARS. NO ADDITIONAL PAYMENT WILL BE MADE FOR THIS SUBSTITUTION.

GENERAL NOTES:

IF DESIGN FILL IS BETWEEN TABULATED DESIGN FILLS, USE THE NEXT GREATER TABULATED DESIGN FILL, EXCEPT FOR DESIGN FILLS BETWEEN 2 FEET AND 4 FEET. FOR DESIGN FILLS BETWEEN 2 FEET AND 4 FEET USE THE GREATER MEMBER THICKNESS, AREA OF REINFORCEMENT AND BAR DIMENSIONS FROM THE 2 FEET AND 4 FEET TABULATED DESIGN FILLS. AREA OF REINFORCEMENT EQUALS BAR AREA PER FOOT SPACING.

SPECIAL DESIGNS ARE REQUIRED WHEN THE DESIGN FILL IS LESS THAN 1 FOOT OR GREATER THAN 50 FEET.

DIMENSIONS ARE IN INCHES UNLESS OTHERWISE SPECIFIED.

DESIGN FILLS ARE MEASURED FROM THE TOP OF TOP SLAB TO THE TOP OF EARTH FILL OR ROADWAY.

CULVERTS MEET STRENGTH AND SERVICEABILITY REQUIREMENTS FOR THE DESIGN VEHICULAR LIVE LOAD HL-93 MINUS THE LANE LOAD.


MISSOURI HIGHWAYS AND TRANSPORTATION COMMISSION
105 WEST CAPITOL
JEFFERSON CITY, MO 65102
1-888-ASK-MODOT (1-888-275-6636)


STATE OF MISSOURI
DENNIS W. HECKMAN
NUMBER PE-27141
PROFESSIONAL ENGINEER
THIS SHEET HAS BEEN SIGNED, SEALED AND DATED ELECTRONICALLY.

# CONCRETE SINGLE BOX CULVERT

MEMBER THICKNESS
BAR SIZE, SPACING & DIMENSIONS

SPAN (S): 7 FEET
HEIGHT (HT): 4 THRU 10 FEET

DATE EFFECTIVE: 04/01/2011
DATE PREPARED: 4/18/2011

703.17

SHEET NO.
5 OF 14

IF A SEAL IS PRESENT ON THIS SHEET IT HAS BEEN ELECTRONICALLY SEALED AND DATED.

## SPAN (S) = 8 FT  HEIGHT (HT) = 4 FT OR 5 FT OR 6 FT

| DESIGN FILL | MEMBER THICKNESS | | | TOP SLAB BARS | | | | | | | | BOTTOM SLAB BARS | | | | | | | | WALL BARS | | |
|---|---|---|---|---|---|---|---|---|---|---|---|---|---|---|---|---|---|---|---|---|---|---|
| | | | | A1 BARS | | J3 BARS | | | | | | A2 BARS | | J4 BARS | | | | | | B2 BARS | | |
| | TS | BS | TX | SIZE | SPA. | SIZE | SPA. | C1 | K2 | | | SIZE | SPA. | SIZE | SPA. | C4 | K3 | | | SIZE | SPA. | G1 |
| | | | | | | | | | HT=4′ | HT=5′ | HT=6′ | | | | | | HT=4′ | HT=5′ | HT=6′ | | | |
| 1 FT | 12 | 9 | 8 | 5 | 7 | 4 | 8.5 | 63.5 | 28.1 | 33.5 | 38.8 | 5 | 7.5 | 5 | 6 | 44.8 | 53 | 65 | 77 | 5 | 12 | 12 |
| 2 FT | 12 | 9 | 8 | 5 | 7 | 4 | 8 | 63.5 | 28.1 | 33.5 | 38.8 | 5 | 7 | 6 | 7.5 | 43.6 | 53 | 65 | 77 | 5 | 12 | 12 |
| 4 FT | 8 | 8 | 8 | 5 | 8 | 6 | 7.5 | 38.5 | 32.5 | 39.0 | 45.6 | 5 | 6.5 | 6 | 6 | 38.5 | 52 | 64 | 76 | 5 | 12 | 0 |
| 6 FT | 8 | 8 | 8 | 5 | 8.5 | 6 | 7.5 | 37.5 | 32.5 | 39.0 | 45.6 | 5 | 7 | 6 | 6 | 36.4 | 52 | 64 | 76 | 5 | 12 | 0 |
| 8 FT | 8 | 8 | 8 | 5 | 8 | 6 | 7.5 | 36.4 | 32.5 | 39.0 | 45.6 | 5 | 6.5 | 6 | 6 | 35.4 | 52 | 64 | 76 | 5 | 12 | 0 |
| 10 FT | 8 | 8 | 8 | 5 | 8.5 | 6 | 7.5 | 34.4 | 32.5 | 39.0 | 45.6 | 5 | 7 | 6 | 6 | 34.4 | 52 | 64 | 76 | 5 | 12 | 0 |
| 12 FT | 8 | 9 | 8 | 5 | 7.5 | 6 | 7.5 | 34.4 | 32.4 | 38.9 | 45.4 | 5 | 6.5 | 6 | 7.5 | 32.3 | 53 | 65 | 77 | 5 | 12 | 0 |
| 14 FT | 8 | 9 | 8 | 5 | 6.5 | 6 | 6.5 | 34.4 | 32.4 | 38.9 | 45.4 | 6 | 8 | 6 | 7 | 32.3 | 53 | 65 | 77 | 5 | 12 | 0 |
| 16 FT | 9 | 10 | 8 | 5 | 6 | 5 | 6 | 30.1 | 29.1 | 34.8 | 40.4 | 6 | 8 | 5 | 6.5 | 28.1 | 54 | 66 | 78 | 5 | 12 | 0 |
| 18 FT | 9 | 11 | 8 | 6 | 7.5 | 6 | 7 | 33.3 | 29.6 | 35.3 | 40.9 | 6 | 7.5 | 5 | 7.5 | 27.0 | 55 | 67 | 79 | 5 | 12 | 0 |
| 20 FT | 10 | 12 | 8 | 6 | 7.5 | 5 | 6 | 29.1 | 26.0 | 30.8 | 35.6 | 6 | 7.5 | 5 | 8.5 | 26.0 | 56 | 68 | 80 | 5 | 12 | 0 |
| 22 FT | 11 | 13 | 8 | 6 | 7 | 5 | 6.5 | 28.1 | 27.5 | 32.4 | 37.3 | 6 | 7 | 5 | 8.5 | 26.0 | 57 | 69 | 81 | 5 | 12 | 0 |
| 24 FT | 12 | 13 | 8 | 6 | 7 | 5 | 7.5 | 27.0 | 32.6 | 38.4 | 44.1 | 6 | 7 | 5 | 8 | 26.0 | 57 | 69 | 81 | 5 | 12 | 0 |
| 26 FT | 13 | 14 | 8 | 6 | 7 | 5 | 8 | 27.0 | 29.4 | 34.5 | 39.5 | 6 | 7 | 5 | 8.5 | 26.0 | 58 | 70 | 82 | 5 | 12 | 0 |
| 28 FT | 13 | 15 | 8 | 6 | 6.5 | 5 | 7 | 27.0 | 29.1 | 34.0 | 39.0 | 6 | 6.5 | 5 | 8.5 | 26.0 | 59 | 71 | 83 | 5 | 12 | 0 |
| 30 FT | 14 | 15 | 8 | 6 | 6 | 5 | 7.5 | 26.0 | 30.3 | 35.3 | 40.4 | 6 | 6.5 | 5 | 8.5 | 26.0 | 59 | 71 | 83 | 5 | 12 | 0 |
| 32 FT | 15 | 16 | 8 | 6 | 6 | 5 | 7.5 | 31.3 | 35.5 | 41.3 | 47.0 | 6 | 6.5 | 5 | 8 | 26.0 | 60 | 72 | 84 | 5 | 12 | 0 |
| 34 FT | 15 | 17 | 8 | 6 | 6 | 5 | 7 | 31.3 | 31.5 | 36.5 | 41.6 | 6 | 6.5 | 5 | 7 | 26.0 | 61 | 73 | 85 | 5 | 12 | 0 |
| 36 FT | 16 | 17 | 8 | 6 | 6 | 5 | 7 | 31.3 | 32.6 | 37.9 | 43.0 | 6 | 6 | 5 | 7 | 26.0 | 61 | 73 | 85 | 5 | 12 | 0 |
| 38 FT | 16 | 18 | 8 | 7 | 7.5 | 5 | 7 | 31.3 | 36.3 | 41.9 | 47.5 | 6 | 6 | 5 | 6.5 | 26.0 | 62 | 74 | 86 | 5 | 11.5 | 0 |
| 40 FT | 17 | 18 | 8 | 7 | 7.5 | 5 | 6.5 | 31.3 | 37.5 | 43.3 | 49.0 | 6 | 6 | 5 | 6.5 | 26.0 | 62 | 74 | 86 | 5 | 10.5 | 0 |
| 42 FT | 17 | 19 | 8 | 7 | 7 | 5 | 6.5 | 31.3 | 37.1 | 42.8 | 48.4 | 6 | 6 | 5 | 6.5 | 26.0 | 63 | 75 | 87 | 5 | 10 | 0 |
| 44 FT | 18 | 19 | 8 | 7 | 7 | 5 | 6.5 | 30.1 | 38.4 | 44.1 | 49.9 | 7 | 7.5 | 5 | 6.5 | 26.0 | 63 | 75 | 87 | 5 | 9.5 | 0 |
| 46 FT | 18 | 20 | 8 | 7 | 7 | 5 | 6 | 31.3 | 38.1 | 43.8 | 49.4 | 7 | 7.5 | 5 | 6 | 26.0 | 64 | 76 | 88 | 5 | 9.5 | 0 |
| 48 FT | 19 | 20 | 8 | 7 | 7 | 5 | 6 | 31.3 | 39.4 | 45.1 | 50.9 | 7 | 7.5 | 5 | 6 | 26.0 | 64 | 76 | 88 | 5 | 9.5 | 0 |
| 50 FT | 19 | 20 | 8 | 7 | 6.5 | 5 | 6 | 31.3 | 39.4 | 45.1 | 50.9 | 7 | 7 | 6 | 7.5 | 29.1 | 64 | 76 | 88 | 5 | 9.5 | 0 |

## SPAN (S) = 8 FT  HEIGHT (HT) = 7 FT OR 8 FT OR 9 FT

| DESIGN FILL | MEMBER THICKNESS | | | TOP SLAB BARS | | | | | | | | BOTTOM SLAB BARS | | | | | | | | WALL BARS | | |
|---|---|---|---|---|---|---|---|---|---|---|---|---|---|---|---|---|---|---|---|---|---|---|
| | | | | A1 BARS | | J3 BARS | | | | | | A2 BARS | | J4 BARS | | | | | | B2 BARS | | |
| | TS | BS | TX | SIZE | SPA. | SIZE | SPA. | C1 | K2 | | | SIZE | SPA. | SIZE | SPA. | C4 | K3 | | | SIZE | SPA. | G1 |
| | | | | | | | | | HT=7′ | HT=8′ | HT=9′ | | | | | | HT=7′ | HT=8′ | HT=9′ | | | |
| 1 FT | 12 | 10 | 8 | 5 | 7 | 4 | 6.5 | 63.5 | 28.3 | 31.6 | 35.0 | 5 | 7 | 5 | 6.5 | 65.5 | 90 | 102 | 114 | 5 | 12 | 12 |
| 2 FT | 12 | 10 | 8 | 5 | 7 | 4 | 6 | 63.5 | 28.3 | 31.6 | 35.0 | 5 | 7 | 5 | 6.5 | 65.5 | 90 | 102 | 114 | 5 | 12 | 12 |
| 4 FT | 8 | 9 | 8 | 5 | 7.5 | 6 | 7.5 | 66.5 | 28.8 | 32.4 | 36.0 | 5 | 6.5 | 6 | 6.5 | 66.5 | 89 | 101 | 113 | 5 | 12 | 0 |
| 6 FT | 8 | 9 | 8 | 5 | 8 | 6 | 7.5 | 53.0 | 28.8 | 32.4 | 36.0 | 5 | 7 | 6 | 6.5 | 58.3 | 89 | 101 | 113 | 5 | 12 | 0 |
| 8 FT | 8 | 9 | 8 | 5 | 7.5 | 6 | 7.5 | 47.9 | 28.8 | 32.4 | 36.0 | 5 | 6.5 | 6 | 6 | 51.0 | 89 | 101 | 113 | 5 | 11.5 | 0 |
| 10 FT | 8 | 9 | 8 | 5 | 8 | 6 | 7.5 | 41.6 | 28.8 | 32.4 | 36.0 | 5 | 7 | 6 | 6 | 43.6 | 89 | 101 | 113 | 5 | 12 | 0 |
| 12 FT | 8 | 9 | 9 | 5 | 7.5 | 6 | 7 | 41.0 | 32.6 | 36.8 | 40.8 | 5 | 6.5 | 6 | 6.5 | 42.0 | 89 | 101 | 113 | 5 | 12 | 0 |
| 14 FT | 8 | 10 | 9 | 5 | 6.5 | 6 | 6.5 | 41.0 | 28.1 | 31.6 | 35.1 | 5 | 6 | 6 | 7 | 42.0 | 90 | 102 | 114 | 5 | 12 | 0 |
| 16 FT | 9 | 10 | 9 | 5 | 6 | 6 | 7.5 | 41.0 | 29.4 | 33.0 | 36.6 | 6 | 7.5 | 6 | 6.5 | 42.0 | 90 | 102 | 114 | 5 | 12 | 0 |
| 18 FT | 9 | 11 | 9 | 6 | 8 | 6 | 6.5 | 39.9 | 29.8 | 33.3 | 36.9 | 6 | 7.5 | 6 | 7 | 42.0 | 91 | 103 | 115 | 5 | 11 | 0 |
| 20 FT | 10 | 11 | 9 | 6 | 7.5 | 6 | 7 | 39.9 | 30.0 | 33.6 | 37.3 | 6 | 6.5 | 6 | 6 | 42.0 | 91 | 103 | 115 | 5 | 10 | 0 |
| 22 FT | 11 | 12 | 9 | 6 | 7.5 | 6 | 7 | 39.9 | 31.6 | 35.4 | 39.0 | 6 | 7 | 6 | 6.5 | 42.0 | 92 | 104 | 116 | 5 | 9 | 0 |
| 24 FT | 11 | 13 | 9 | 6 | 6.5 | 6 | 6.5 | 39.9 | 31.9 | 35.6 | 39.4 | 6 | 6.5 | 6 | 7 | 42.0 | 93 | 105 | 117 | 5 | 8.5 | 0 |
| 26 FT | 12 | 14 | 10 | 6 | 7 | 5 | 6 | 38.1 | 32.5 | 36.3 | 40.0 | 6 | 7 | 5 | 6.5 | 39.3 | 94 | 106 | 118 | 5 | 9 | 0 |
| 28 FT | 13 | 15 | 10 | 6 | 7 | 6 | 7.5 | 40.3 | 33.1 | 36.9 | 40.6 | 6 | 7 | 5 | 6.5 | 39.3 | 95 | 107 | 119 | 5 | 8 | 0 |
| 30 FT | 13 | 15 | 10 | 6 | 6.5 | 6 | 6.5 | 40.3 | 33.1 | 36.9 | 40.6 | 6 | 6.5 | 5 | 6 | 39.3 | 95 | 107 | 119 | 5 | 8 | 0 |
| 32 FT | 14 | 16 | 11 | 6 | 6.5 | 6 | 8.5 | 40.6 | 34.9 | 38.8 | 42.5 | 6 | 6.5 | 5 | 7 | 39.6 | 96 | 108 | 120 | 5 | 8 | 0 |
| 34 FT | 15 | 17 | 11 | 6 | 6.5 | 6 | 8 | 47.1 | 35.5 | 39.4 | 43.3 | 6 | 6.5 | 5 | 7 | 39.6 | 97 | 109 | 121 | 5 | 7.5 | 0 |
| 36 FT | 15 | 17 | 11 | 6 | 6 | 6 | 7 | 47.1 | 35.5 | 39.4 | 43.3 | 6 | 6 | 5 | 6.5 | 39.6 | 97 | 109 | 121 | 5 | 7.5 | 0 |
| 38 FT | 16 | 18 | 12 | 6 | 6 | 6 | 8 | 47.5 | 36.1 | 40.0 | 43.9 | 6 | 6 | 5 | 6.5 | 40.0 | 98 | 110 | 122 | 5 | 7.5 | 0 |
| 40 FT | 17 | 18 | 12 | 6 | 6 | 6 | 8 | 47.5 | 37.6 | 41.6 | 45.5 | 6 | 6 | 5 | 6.5 | 40.0 | 98 | 110 | 122 | 5 | 7 | 0 |
| 42 FT | 17 | 19 | 12 | 7 | 8 | 6 | 7.5 | 47.5 | 38.0 | 41.9 | 45.9 | 6 | 6 | 5 | 6.5 | 41.0 | 99 | 111 | 123 | 5 | 7 | 0 |
| 44 FT | 18 | 19 | 13 | 7 | 8 | 5 | 6 | 44.8 | 38.3 | 42.3 | 46.3 | 6 | 6 | 5 | 6 | 40.4 | 99 | 111 | 123 | 5 | 7 | 0 |
| 46 FT | 18 | 20 | 13 | 7 | 7.5 | 6 | 8 | 48.0 | 38.6 | 42.6 | 46.5 | 7 | 8 | 5 | 6 | 41.4 | 100 | 112 | 124 | 5 | 6.5 | 0 |
| 48 FT | 19 | 20 | 13 | 7 | 7.5 | 6 | 8 | 48.0 | 40.1 | 44.3 | 48.3 | 7 | 7.5 | 5 | 6 | 41.4 | 100 | 112 | 124 | 5 | 6.5 | 0 |
| 50 FT | 19 | 21 | 13 | 7 | 7 | 6 | 7 | 48.0 | 39.3 | 43.3 | 47.3 | 7 | 7.5 | 5 | 6 | 41.4 | 101 | 113 | 125 | 5 | 6.5 | 0 |

## SPAN (S) = 8 FT  HEIGHT (HT) = 10 FT OR 11 FT

| DESIGN FILL | MEMBER THICKNESS | | | TOP SLAB BARS | | | | | | | BOTTOM SLAB BARS | | | | | | | WALL BARS | | |
|---|---|---|---|---|---|---|---|---|---|---|---|---|---|---|---|---|---|---|---|---|
| | | | | A1 BARS | | J3 BARS | | | | | A2 BARS | | J4 BARS | | | | | B2 BARS | | |
| | TS | BS | TX | SIZE | SPA. | SIZE | SPA. | C1 | K2 | | SIZE | SPA. | SIZE | SPA. | C4 | K3 | | SIZE | SPA. | G1 |
| | | | | | | | | | HT=10′ | HT=11′ | | | | | | HT=10′ | HT=11′ | | | |
| 1 FT | 11 | 10 | 8 | 5 | 6.5 | 5 | 7.5 | 65.5 | 31.3 | 34.0 | 5 | 6.5 | 6 | 6.5 | 66.5 | 126 | 138 | 5 | 9.5 | 12 |
| 2 FT | 11 | 10 | 8 | 5 | 6.5 | 5 | 7 | 65.5 | 31.3 | 34.0 | 5 | 6 | 6 | 6 | 66.5 | 126 | 138 | 5 | 9.5 | 12 |
| 4 FT | 8 | 9 | 9 | 5 | 7.5 | 6 | 7 | 68.3 | 33.0 | 36.0 | 5 | 6 | 6 | 6 | 68.3 | 125 | 137 | 5 | 8.5 | 0 |
| 6 FT | 8 | 10 | 9 | 5 | 8.5 | 6 | 7 | 68.3 | 30.6 | 33.4 | 5 | 7 | 6 | 6.5 | 68.3 | 126 | 138 | 5 | 8.5 | 0 |
| 8 FT | 8 | 10 | 9 | 5 | 8 | 6 | 7 | 68.3 | 33.3 | 36.3 | 5 | 7 | 6 | 6 | 68.3 | 126 | 138 | 5 | 8.5 | 0 |
| 10 FT | 8 | 10 | 9 | 5 | 8.5 | 6 | 7 | 52.5 | 30.6 | 33.4 | 5 | 7 | 6 | 6 | 68.3 | 126 | 138 | 5 | 8.5 | 0 |
| 12 FT | 8 | 10 | 9 | 5 | 7.5 | 6 | 6.5 | 50.4 | 33.3 | 36.3 | 5 | 6.5 | 6 | 6 | 65.1 | 126 | 138 | 5 | 8.5 | 0 |
| 14 FT | 9 | 11 | 9 | 5 | 7 | 6 | 7 | 52.5 | 31.0 | 33.8 | 5 | 6.5 | 6 | 6 | 69.3 | 127 | 139 | 5 | 8.5 | 0 |
| 16 FT | 9 | 11 | 9 | 5 | 6 | 6 | 6 | 50.4 | 33.8 | 36.8 | 6 | 8 | 6 | 6 | 64.0 | 127 | 139 | 5 | 8.5 | 0 |
| 18 FT | 10 | 12 | 9 | 5 | 6 | 6 | 6 | 52.5 | 34.3 | 37.3 | 6 | 8 | 6 | 6 | 68.3 | 128 | 140 | 5 | 8 | 0 |
| 20 FT | 11 | 12 | 10 | 5 | 6 | 5 | 6 | 48.8 | 31.8 | 34.5 | 6 | 7.5 | 6 | 6.5 | 58.3 | 128 | 140 | 5 | 8 | 0 |
| 22 FT | 11 | 13 | 10 | 6 | 8 | 6 | 7 | 50.9 | 33.4 | 36.3 | 6 | 7.5 | 6 | 6.5 | 60.4 | 129 | 141 | 5 | 7.5 | 0 |
| 24 FT | 12 | 13 | 11 | 6 | 7.5 | 6 | 8 | 51.4 | 33.6 | 36.5 | 6 | 7 | 6 | 7 | 56.8 | 129 | 141 | 5 | 7.5 | 0 |
| 26 FT | 12 | 14 | 11 | 6 | 7 | 6 | 7.5 | 50.3 | 33.9 | 36.8 | 6 | 7 | 6 | 7 | 57.8 | 130 | 142 | 5 | 7.5 | 0 |
| 28 FT | 13 | 15 | 12 | 6 | 7.5 | 6 | 8 | 50.8 | 34.4 | 37.3 | 6 | 7 | 6 | 7.5 | 57.3 | 131 | 143 | 5 | 7 | 0 |
| 30 FT | 14 | 15 | 12 | 6 | 7 | 6 | 7.5 | 51.9 | 36.0 | 39.0 | 6 | 6.5 | 6 | 7 | 57.3 | 131 | 143 | 5 | 7 | 0 |
| 32 FT | 14 | 16 | 13 | 6 | 7 | 6 | 8 | 51.3 | 36.3 | 39.3 | 6 | 6.5 | 6 | 7.5 | 56.6 | 132 | 144 | 5 | 6.5 | 0 |
| 34 FT | 15 | 16 | 13 | 6 | 6.5 | 6 | 7.5 | 57.8 | 36.5 | 39.5 | 6 | 6.5 | 6 | 7 | 55.6 | 132 | 144 | 5 | 6.5 | 0 |
| 36 FT | 15 | 17 | 13 | 6 | 6.5 | 6 | 6.5 | 57.8 | 36.8 | 39.8 | 6 | 6.5 | 6 | 7 | 57.8 | 133 | 145 | 5 | 6.5 | 0 |
| 38 FT | 16 | 18 | 14 | 6 | 6.5 | 6 | 7.5 | 58.3 | 37.3 | 40.3 | 6 | 6.5 | 6 | 7.5 | 57.3 | 134 | 146 | 5 | 6 | 0 |
| 40 FT | 16 | 18 | 14 | 6 | 6 | 6 | 7 | 58.3 | 37.3 | 40.3 | 6 | 6 | 6 | 7 | 57.3 | 134 | 146 | 5 | 6 | 0 |
| 42 FT | 17 | 19 | 15 | 6 | 6 | 6 | 7 | 58.9 | 42.3 | 45.6 | 6 | 6 | 6 | 7.5 | 56.6 | 135 | 147 | 6 | 8 | 0 |
| 44 FT | 17 | 19 | 15 | 6 | 6 | 6 | 6.5 | 57.8 | 42.3 | 45.6 | 6 | 6 | 6 | 7 | 56.6 | 135 | 147 | 6 | 8 | 0 |
| 46 FT | 18 | 19 | 15 | 6 | 6 | 6 | 7 | 58.9 | 42.5 | 45.9 | 7 | 8 | 6 | 6 | 56.6 | 135 | 147 | 6 | 8 | 0 |
| 48 FT | 18 | 20 | 16 | 7 | 8 | 6 | 7 | 58.3 | 42.9 | 46.3 | 7 | 8 | 6 | 7 | 56.0 | 136 | 148 | 6 | 8 | 0 |
| 50 FT | 19 | 21 | 16 | 7 | 7.5 | 6 | 7 | 59.4 | 43.4 | 46.8 | 7 | 8 | 6 | 7 | 58.3 | 137 | 149 | 6 | 8 | 0 |

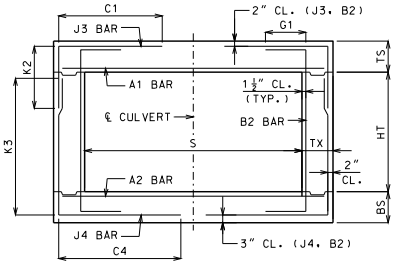


BAR DIMENSIONS DIAGRAM
SYMMETRICAL ABOUT ℄ CULVERT.

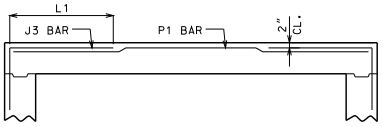


ALTERNATE J3 BAR

AT CONTRACTOR'S OPTION, ALTERNATE J3 BARS MAY BE USED WHEN THE DISTANCE BETWEEN THE ENDS OF J3 BARS IN THE TOP SLAB IS LESS THAN 2′-0″. DIMENSION L1 (NOT C1) SHALL BE USED WITH ALTERNATE J3 BARS. WHERE L1 IS EQUAL TO 18″, 22″ AND 28″ FOR #4, #5 AND #6 BARS, RESPECTIVELY. ADDITIONAL P1 BARS ARE REQUIRED WITH ALTERNATE J3 BARS WITH A LENGTH EQUAL TO A1 BARS, AND SIZE AND SPACING EQUAL TO J3 BARS. NO ADDITIONAL PAYMENT WILL BE MADE FOR THIS SUBSTITUTION.

GENERAL NOTES:

IF DESIGN FILL IS BETWEEN TABULATED DESIGN FILLS, USE THE NEXT GREATER TABULATED DESIGN FILL, EXCEPT FOR DESIGN FILLS BETWEEN 2 FEET AND 4 FEET. FOR DESIGN FILLS BETWEEN 2 FEET AND 4 FEET USE THE GREATER MEMBER THICKNESS, AREA OF REINFORCEMENT AND BAR DIMENSIONS FROM THE 2 FEET AND 4 FEET TABULATED DESIGN FILLS. AREA OF REINFORCEMENT EQUALS BAR AREA PER FOOT SPACING.

SPECIAL DESIGNS ARE REQUIRED WHEN THE DESIGN FILL IS LESS THAN 1 FOOT OR GREATER THAN 50 FEET.

DIMENSIONS ARE IN INCHES UNLESS OTHERWISE SPECIFIED.

DESIGN FILLS ARE MEASURED FROM THE TOP OF TOP SLAB TO THE TOP OF EARTH FILL OR ROADWAY.

CULVERTS MEET STRENGTH AND SERVICEABILITY REQUIREMENTS FOR THE DESIGN VEHICULAR LIVE LOAD HL-93 MINUS THE LANE LOAD.


MISSOURI HIGHWAYS AND TRANSPORTATION COMMISSION
105 WEST CAPITOL
JEFFERSON CITY, MO 65102
1-888-ASK-MODOT (1-888-275-6636)


STATE OF MISSOURI
DENNIS W. HECKMAN
NUMBER PE-27141
PROFESSIONAL ENGINEER
THIS SHEET HAS BEEN SIGNED, SEALED AND DATED ELECTRONICALLY.

# CONCRETE SINGLE BOX CULVERT

MEMBER THICKNESS
BAR SIZE, SPACING & DIMENSIONS

SPAN (S): 8 FEET
HEIGHT (HT): 4 THRU 11 FEET

DATE EFFECTIVE: 04/01/2011
DATE PREPARED: 4/18/2011

703.17

SHEET NO.
6 OF 14

IF A SEAL IS PRESENT ON THIS SHEET IT HAS BEEN ELECTRONICALLY SEALED AND DATED.

## SPAN (S) = 9 FT  HEIGHT (HT) = 5 FT OR 6 FT OR 7 FT

| DESIGN FILL | MEMBER THICKNESS | | | TOP SLAB BARS | | | | | | | | BOTTOM SLAB BARS | | | | | | | | WALL BARS | | |
|---|---|---|---|---|---|---|---|---|---|---|---|---|---|---|---|---|---|---|---|---|---|---|
| | | | | A1 BARS | | J3 BARS | | | | | | A2 BARS | | J4 BARS | | | | | | B2 BARS | | |
| | TS | BS | TX | SIZE | SPA. | SIZE | SPA. | C1 | K2 HT=5′ | K2 HT=6′ | K2 HT=7′ | SIZE | SPA. | SIZE | SPA. | C4 | K3 HT=5′ | K3 HT=6′ | K3 HT=7′ | SIZE | SPA. | G1 |
| 1 FT | 12 | 9 | 8 | 5 | 6.5 | 4 | 7 | 69.6 | 28.1 | 32.5 | 37.0 | 5 | 6.5 | 6 | 7.5 | 54.5 | 65 | 77 | 89 | 5 | 12 | 12 |
| 2 FT | 12 | 9 | 8 | 5 | 6.5 | 4 | 7 | 69.6 | 28.1 | 32.5 | 37.0 | 5 | 6 | 6 | 7 | 48.8 | 65 | 77 | 89 | 5 | 12 | 12 |
| 4 FT | 8 | 9 | 8 | 5 | 6.5 | 6 | 7 | 42.9 | 32.4 | 37.8 | 43.3 | 5 | 6 | 6 | 7.5 | 42.9 | 65 | 77 | 89 | 5 | 12 | 0 |
| 6 FT | 8 | 9 | 8 | 5 | 7 | 6 | 7.5 | 40.6 | 32.4 | 37.8 | 43.3 | 5 | 6 | 6 | 7 | 39.5 | 65 | 77 | 89 | 5 | 12 | 0 |
| 8 FT | 8 | 10 | 8 | 5 | 6.5 | 6 | 7 | 39.5 | 24.1 | 28.0 | 32.0 | 5 | 6 | 5 | 6.5 | 33.6 | 66 | 78 | 90 | 5 | 12 | 0 |
| 10 FT | 8 | 10 | 8 | 5 | 7 | 6 | 7.5 | 37.1 | 24.1 | 28.0 | 32.0 | 5 | 6.5 | 4 | 6 | 31.4 | 66 | 78 | 90 | 5 | 12 | 0 |
| 12 FT | 8 | 10 | 8 | 5 | 6 | 6 | 6 | 37.1 | 28.5 | 33.1 | 37.9 | 6 | 8 | 5 | 6.5 | 30.1 | 66 | 78 | 90 | 5 | 12 | 0 |
| 14 FT | 9 | 10 | 8 | 6 | 7.5 | 6 | 7 | 34.8 | 29.6 | 34.4 | 39.3 | 6 | 7 | 5 | 6 | 30.1 | 66 | 78 | 90 | 5 | 12 | 0 |
| 16 FT | 9 | 11 | 8 | 6 | 7 | 6 | 6 | 34.8 | 29.3 | 33.9 | 38.6 | 6 | 6.5 | 5 | 7 | 29.0 | 67 | 79 | 91 | 5 | 12 | 0 |
| 18 FT | 10 | 12 | 8 | 6 | 6.5 | 6 | 6.5 | 33.6 | 30.0 | 34.8 | 39.4 | 6 | 6.5 | 5 | 7.5 | 29.0 | 68 | 80 | 92 | 5 | 12 | 0 |
| 20 FT | 11 | 13 | 8 | 6 | 6 | 6 | 7 | 33.6 | 31.6 | 36.4 | 41.3 | 6 | 6 | 5 | 8 | 29.0 | 69 | 81 | 93 | 5 | 12 | 0 |
| 22 FT | 12 | 14 | 8 | 6 | 6 | 5 | 6 | 29.0 | 32.4 | 37.3 | 42.0 | 6 | 6 | 5 | 8.5 | 27.9 | 70 | 82 | 94 | 5 | 12 | 0 |
| 24 FT | 13 | 15 | 8 | 6 | 6 | 5 | 6 | 29.0 | 29.0 | 33.3 | 37.5 | 6 | 6 | 5 | 8.5 | 27.9 | 71 | 83 | 95 | 5 | 12 | 0 |
| 26 FT | 14 | 16 | 8 | 6 | 6 | 5 | 6 | 29.0 | 30.6 | 34.9 | 39.3 | 6 | 6 | 5 | 8 | 27.9 | 72 | 84 | 96 | 5 | 12 | 0 |
| 28 FT | 15 | 16 | 8 | 7 | 7.5 | 5 | 6.5 | 33.6 | 35.3 | 40.1 | 45.1 | 7 | 8 | 5 | 8 | 27.9 | 72 | 84 | 96 | 5 | 12 | 0 |
| 30 FT | 15 | 17 | 8 | 7 | 7 | 6 | 8 | 37.1 | 35.6 | 40.6 | 45.5 | 7 | 7.5 | 5 | 7 | 27.9 | 73 | 85 | 97 | 5 | 11.5 | 0 |
| 32 FT | 16 | 17 | 8 | 7 | 7 | 5 | 6 | 32.5 | 36.1 | 41.0 | 45.9 | 7 | 7.5 | 5 | 6.5 | 27.9 | 73 | 85 | 97 | 5 | 10 | 0 |
| 34 FT | 17 | 18 | 8 | 7 | 7 | 5 | 6 | 32.5 | 37.8 | 42.9 | 47.9 | 7 | 7.5 | 5 | 6.5 | 29.0 | 74 | 86 | 98 | 5 | 9.5 | 0 |
| 36 FT | 17 | 19 | 9 | 7 | 7 | 5 | 6 | 33.9 | 37.3 | 42.3 | 47.1 | 7 | 7.5 | 5 | 7.5 | 29.3 | 75 | 87 | 99 | 5 | 10.5 | 0 |
| 38 FT | 18 | 20 | 9 | 7 | 7 | 5 | 6 | 33.9 | 38.1 | 43.0 | 48.0 | 7 | 7.5 | 5 | 7 | 29.3 | 76 | 88 | 100 | 5 | 9.5 | 0 |
| 40 FT | 19 | 20 | 9 | 7 | 6.5 | 5 | 6.5 | 33.9 | 39.5 | 44.5 | 49.5 | 7 | 7 | 5 | 7 | 29.3 | 76 | 88 | 100 | 5 | 8.5 | 0 |
| 42 FT | 19 | 21 | 10 | 7 | 6.5 | 5 | 6.5 | 34.3 | 39.9 | 45.0 | 50.0 | 7 | 7 | 5 | 7.5 | 29.5 | 77 | 89 | 101 | 5 | 10 | 0 |
| 44 FT | 20 | 21 | 10 | 7 | 6.5 | 5 | 6.5 | 34.3 | 40.4 | 45.4 | 50.4 | 7 | 6.5 | 5 | 7.5 | 29.5 | 77 | 89 | 101 | 5 | 9.5 | 0 |
| 46 FT | 21 | 22 | 10 | 7 | 6.5 | 5 | 6.5 | 34.3 | 41.1 | 46.3 | 51.3 | 7 | 7 | 5 | 7 | 29.5 | 78 | 90 | 102 | 5 | 8.5 | 0 |
| 48 FT | 21 | 22 | 10 | 7 | 6 | 5 | 6.5 | 34.3 | 41.1 | 46.3 | 51.3 | 7 | 6.5 | 5 | 7 | 29.5 | 78 | 90 | 102 | 5 | 8 | 0 |
| 50 FT | 22 | 23 | 10 | 7 | 6 | 5 | 6.5 | 34.3 | 42.0 | 47.0 | 52.1 | 7 | 6.5 | 5 | 6.5 | 30.6 | 79 | 91 | 103 | 5 | 8 | 0 |

## SPAN (S) = 9 FT  HEIGHT (HT) = 8 FT OR 9 FT OR 10 FT

| DESIGN FILL | MEMBER THICKNESS | | | TOP SLAB BARS | | | | | | | | BOTTOM SLAB BARS | | | | | | | | WALL BARS | | |
|---|---|---|---|---|---|---|---|---|---|---|---|---|---|---|---|---|---|---|---|---|---|---|
| | | | | A1 BARS | | J3 BARS | | | | | | A2 BARS | | J4 BARS | | | | | | B2 BARS | | |
| | TS | BS | TX | SIZE | SPA. | SIZE | SPA. | C1 | K2 HT=8′ | K2 HT=9′ | K2 HT=10′ | SIZE | SPA. | SIZE | SPA. | C4 | K3 HT=8′ | K3 HT=9′ | K3 HT=10′ | SIZE | SPA. | G1 |
| 1 FT | 12 | 11 | 8 | 5 | 6.5 | 5 | 8.5 | 70.8 | 29.6 | 32.8 | 35.9 | 5 | 6.5 | 5 | 6.5 | 70.8 | 103 | 115 | 127 | 5 | 12 | 12 |
| 2 FT | 12 | 11 | 8 | 5 | 6.5 | 5 | 8.5 | 70.8 | 29.6 | 32.8 | 35.9 | 5 | 6 | 5 | 6 | 70.8 | 103 | 115 | 127 | 5 | 11.5 | 12 |
| 4 FT | 8 | 10 | 9 | 5 | 6.5 | 6 | 7 | 67.9 | 26.1 | 29.0 | 31.9 | 5 | 6 | 5 | 6 | 72.5 | 102 | 114 | 126 | 5 | 11.5 | 0 |
| 6 FT | 8 | 10 | 9 | 5 | 7 | 6 | 7 | 53.9 | 28.4 | 31.5 | 34.6 | 5 | 6 | 6 | 7 | 64.4 | 102 | 114 | 126 | 5 | 11 | 0 |
| 8 FT | 8 | 10 | 9 | 5 | 6.5 | 6 | 6.5 | 49.1 | 28.4 | 31.5 | 34.6 | 5 | 6 | 6 | 6.5 | 55.0 | 102 | 114 | 126 | 5 | 10.5 | 0 |
| 10 FT | 8 | 10 | 9 | 5 | 7 | 6 | 7 | 44.5 | 28.4 | 31.5 | 34.6 | 5 | 6.5 | 6 | 7 | 46.8 | 102 | 114 | 126 | 5 | 12 | 0 |
| 12 FT | 9 | 10 | 9 | 5 | 6.5 | 5 | 6 | 41.0 | 29.8 | 33.0 | 36.1 | 6 | 8 | 6 | 6 | 45.6 | 102 | 114 | 126 | 5 | 11.5 | 0 |
| 14 FT | 9 | 10 | 9 | 6 | 8 | 6 | 6.5 | 43.3 | 33.0 | 36.6 | 40.3 | 6 | 6.5 | 6 | 6 | 45.6 | 102 | 114 | 126 | 5 | 10.5 | 0 |
| 16 FT | 10 | 11 | 9 | 6 | 7.5 | 6 | 7 | 43.3 | 30.3 | 33.5 | 36.8 | 6 | 6.5 | 6 | 6 | 45.6 | 103 | 115 | 127 | 5 | 9.5 | 0 |
| 18 FT | 10 | 12 | 9 | 6 | 6.5 | 6 | 6 | 43.3 | 31.6 | 35.0 | 38.4 | 6 | 6.5 | 6 | 6 | 45.6 | 104 | 116 | 128 | 5 | 8.5 | 0 |
| 20 FT | 11 | 13 | 9 | 6 | 6.5 | 6 | 6.5 | 43.3 | 31.0 | 34.3 | 37.5 | 6 | 6.5 | 6 | 6 | 45.6 | 105 | 117 | 129 | 5 | 8.5 | 0 |
| 22 FT | 12 | 13 | 9 | 6 | 6 | 6 | 6.5 | 43.3 | 33.6 | 37.1 | 40.6 | 6 | 6 | 7 | 6.5 | 48.0 | 105 | 117 | 129 | 5 | 8.5 | 0 |
| 24 FT | 13 | 14 | 10 | 6 | 6 | 6 | 7 | 43.6 | 33.0 | 36.4 | 39.8 | 6 | 6 | 6 | 6.5 | 44.9 | 106 | 118 | 130 | 5 | 8 | 0 |
| 26 FT | 14 | 15 | 10 | 6 | 6 | 6 | 7 | 43.6 | 34.8 | 38.3 | 41.8 | 6 | 6 | 6 | 7 | 44.9 | 107 | 119 | 131 | 5 | 8 | 0 |
| 28 FT | 14 | 16 | 11 | 7 | 8 | 6 | 7 | 44.0 | 35.1 | 38.6 | 42.0 | 7 | 8 | 5 | 6 | 42.9 | 108 | 120 | 132 | 5 | 7.5 | 0 |
| 30 FT | 15 | 17 | 11 | 7 | 8 | 6 | 6.5 | 50.0 | 35.6 | 39.1 | 42.6 | 6 | 6 | 5 | 6 | 42.9 | 109 | 121 | 133 | 5 | 7.5 | 0 |
| 32 FT | 16 | 18 | 12 | 6 | 6 | 6 | 7.5 | 50.4 | 36.3 | 39.8 | 43.3 | 6 | 6 | 5 | 6 | 43.3 | 110 | 122 | 134 | 5 | 7 | 0 |
| 34 FT | 16 | 18 | 12 | 7 | 7.5 | 6 | 7 | 50.4 | 36.3 | 39.8 | 43.3 | 7 | 7.5 | 5 | 6 | 43.3 | 110 | 122 | 134 | 5 | 7 | 0 |
| 36 FT | 17 | 19 | 13 | 7 | 7.5 | 6 | 7.5 | 50.9 | 38.1 | 41.8 | 45.3 | 7 | 7.5 | 5 | 6 | 43.5 | 111 | 123 | 135 | 5 | 7 | 0 |
| 38 FT | 18 | 20 | 13 | 7 | 7.5 | 6 | 7.5 | 50.9 | 38.8 | 42.3 | 45.9 | 7 | 7.5 | 5 | 6 | 43.5 | 112 | 124 | 136 | 5 | 6.5 | 0 |
| 40 FT | 18 | 20 | 13 | 7 | 7 | 6 | 7 | 50.9 | 38.8 | 42.3 | 45.9 | 7 | 7 | 6 | 8.5 | 46.0 | 112 | 124 | 136 | 5 | 6.5 | 0 |
| 42 FT | 19 | 21 | 13 | 7 | 7 | 6 | 6.5 | 50.9 | 39.3 | 42.9 | 46.5 | 7 | 7 | 6 | 8 | 47.3 | 113 | 125 | 137 | 5 | 6.5 | 0 |
| 44 FT | 19 | 21 | 14 | 7 | 6.5 | 6 | 6.5 | 51.3 | 39.3 | 42.9 | 46.5 | 7 | 7 | 5 | 6 | 43.9 | 113 | 125 | 137 | 5 | 6 | 0 |
| 46 FT | 20 | 22 | 14 | 7 | 6.5 | 6 | 7 | 51.3 | 41.3 | 45.0 | 48.6 | 7 | 7 | 6 | 8.5 | 47.6 | 114 | 126 | 138 | 5 | 6 | 0 |
| 48 FT | 20 | 22 | 14 | 7 | 6.5 | 6 | 6 | 51.3 | 45.3 | 49.3 | 53.4 | 7 | 6.5 | 6 | 7.5 | 47.6 | 114 | 126 | 138 | 5 | 6 | 0 |
| 50 FT | 21 | 23 | 14 | 7 | 6.5 | 6 | 6 | 51.3 | 41.9 | 45.6 | 49.3 | 7 | 6.5 | 6 | 8 | 47.6 | 115 | 127 | 139 | 5 | 6 | 0 |

## SPAN (S) = 9 FT  HEIGHT (HT) = 11 FT OR 12 FT

| DESIGN FILL | MEMBER THICKNESS | | | TOP SLAB BARS | | | | | | | BOTTOM SLAB BARS | | | | | | | WALL BARS | | |
|---|---|---|---|---|---|---|---|---|---|---|---|---|---|---|---|---|---|---|---|---|
| | | | | A1 BARS | | J3 BARS | | | | | A2 BARS | | J4 BARS | | | | | B2 BARS | | |
| | TS | BS | TX | SIZE | SPA. | SIZE | SPA. | C1 | K2 HT=11′ | K2 HT=12′ | SIZE | SPA. | SIZE | SPA. | C4 | K3 HT=11′ | K3 HT=12′ | SIZE | SPA. | G1 |
| 1 FT | 11 | 11 | 8 | 5 | 6 | 5 | 6 | 70.8 | 31.3 | 33.8 | 5 | 6 | 6 | 6 | 73.1 | 139 | 151 | 5 | 9.5 | 12 |
| 2 FT | 11 | 12 | 8 | 6 | 8.5 | 6 | 7 | 73.1 | 33.0 | 35.6 | 5 | 6 | 6 | 6 | 73.1 | 140 | 152 | 5 | 9.5 | 12 |
| 4 FT | 8 | 10 | 9 | 5 | 6 | 6 | 6.5 | 73.8 | 33.4 | 36.1 | 6 | 8 | 6 | 6 | 73.8 | 138 | 150 | 5 | 8.5 | 0 |
| 6 FT | 8 | 11 | 9 | 5 | 7 | 6 | 6.5 | 73.8 | 32.1 | 34.8 | 5 | 6 | 6 | 6 | 73.8 | 139 | 151 | 5 | 8.5 | 0 |
| 8 FT | 9 | 11 | 9 | 5 | 7 | 6 | 7 | 73.8 | 30.9 | 33.4 | 5 | 6 | 6 | 6 | 73.8 | 139 | 151 | 5 | 8.5 | 0 |
| 10 FT | 9 | 11 | 9 | 5 | 7.5 | 6 | 7 | 58.5 | 30.9 | 33.4 | 5 | 6.5 | 6 | 6 | 73.8 | 139 | 151 | 5 | 8.5 | 0 |
| 12 FT | 9 | 12 | 9 | 5 | 6.5 | 6 | 6 | 56.1 | 34.0 | 36.8 | 5 | 6 | 6 | 6 | 73.8 | 140 | 152 | 5 | 8.5 | 0 |
| 14 FT | 10 | 12 | 9 | 5 | 6 | 6 | 6 | 57.4 | 34.3 | 37.0 | 6 | 8 | 6 | 6 | 73.8 | 140 | 152 | 5 | 7.5 | 0 |
| 16 FT | 10 | 12 | 10 | 6 | 8 | 6 | 6.5 | 53.1 | 34.3 | 37.0 | 6 | 7 | 6 | 6 | 63.8 | 140 | 152 | 5 | 8 | 0 |
| 18 FT | 11 | 13 | 10 | 6 | 7.5 | 6 | 6.5 | 54.3 | 36.3 | 39.1 | 6 | 7 | 6 | 6 | 64.9 | 141 | 153 | 5 | 7.5 | 0 |
| 20 FT | 11 | 13 | 11 | 6 | 6.5 | 6 | 6.5 | 52.4 | 36.3 | 39.1 | 6 | 6.5 | 6 | 7 | 59.5 | 141 | 153 | 5 | 7.5 | 0 |
| 22 FT | 12 | 14 | 12 | 6 | 7 | 6 | 8 | 52.8 | 33.6 | 36.3 | 6 | 6.5 | 6 | 7.5 | 58.8 | 142 | 154 | 5 | 7 | 0 |
| 24 FT | 13 | 15 | 12 | 6 | 6.5 | 6 | 7.5 | 54.0 | 37.3 | 40.1 | 6 | 6.5 | 6 | 7 | 60.0 | 143 | 155 | 5 | 7 | 0 |
| 26 FT | 14 | 15 | 13 | 6 | 6.5 | 6 | 7.5 | 54.5 | 35.9 | 38.6 | 6 | 6 | 6 | 6.5 | 56.9 | 143 | 155 | 5 | 6.5 | 0 |
| 28 FT | 14 | 16 | 13 | 6 | 6 | 6 | 7 | 53.3 | 39.3 | 42.3 | 6 | 6 | 6 | 7 | 58.1 | 144 | 156 | 5 | 6.5 | 0 |
| 30 FT | 15 | 17 | 13 | 6 | 6 | 6 | 6.5 | 60.5 | 39.8 | 42.8 | 6 | 6 | 6 | 6.5 | 60.5 | 145 | 157 | 5 | 6.5 | 0 |
| 32 FT | 16 | 17 | 14 | 6 | 6 | 6 | 7 | 61.0 | 40.0 | 43.0 | 6 | 6 | 6 | 6 | 57.4 | 145 | 157 | 5 | 6 | 0 |
| 34 FT | 16 | 18 | 14 | 7 | 8 | 6 | 6.5 | 61.0 | 40.3 | 43.3 | 7 | 7.5 | 6 | 6.5 | 58.5 | 146 | 158 | 5 | 6 | 0 |
| 36 FT | 17 | 19 | 15 | 6 | 6 | 6 | 7 | 60.3 | 42.4 | 45.5 | 7 | 8 | 6 | 6.5 | 59.0 | 147 | 159 | 6 | 8 | 0 |
| 38 FT | 18 | 19 | 15 | 7 | 7.5 | 6 | 6.5 | 61.5 | 42.6 | 45.8 | 7 | 7.5 | 6 | 6.5 | 57.8 | 147 | 159 | 6 | 8 | 0 |
| 40 FT | 18 | 20 | 15 | 7 | 7.5 | 6 | 6 | 61.5 | 42.9 | 46.0 | 7 | 7.5 | 6 | 6.5 | 60.3 | 148 | 160 | 6 | 8 | 0 |
| 42 FT | 19 | 21 | 16 | 7 | 7.5 | 6 | 6.5 | 62.0 | 43.4 | 46.5 | 7 | 7.5 | 6 | 6.5 | 59.5 | 149 | 161 | 6 | 8 | 0 |
| 44 FT | 19 | 21 | 16 | 7 | 7 | 6 | 6 | 62.0 | 43.4 | 46.5 | 7 | 7 | 6 | 6.5 | 59.5 | 149 | 161 | 6 | 8 | 0 |
| 46 FT | 20 | 22 | 17 | 7 | 7 | 6 | 6.5 | 62.5 | 45.6 | 48.9 | 7 | 7 | 6 | 6.5 | 58.8 | 150 | 162 | 6 | 7.5 | 0 |
| 48 FT | 20 | 22 | 17 | 7 | 7 | 6 | 6 | 61.3 | 45.6 | 48.9 | 7 | 7 | 6 | 6.5 | 58.8 | 150 | 162 | 6 | 7.5 | 0 |
| 50 FT | 21 | 23 | 18 | 7 | 7 | 6 | 6.5 | 63.0 | 46.1 | 49.4 | 7 | 7 | 6 | 6.5 | 59.3 | 151 | 163 | 6 | 7 | 0 |

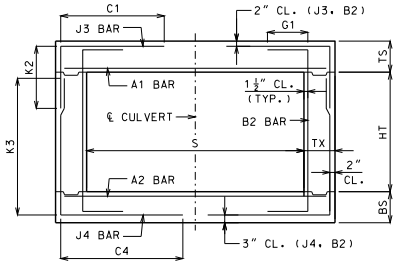


BAR DIMENSIONS DIAGRAM
SYMMETRICAL ABOUT ℄ CULVERT.

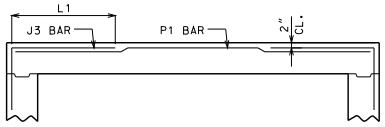


ALTERNATE J3 BAR

AT CONTRACTOR'S OPTION, ALTERNATE J3 BARS MAY BE USED WHEN THE DISTANCE BETWEEN THE ENDS OF J3 BARS IN THE TOP SLAB IS LESS THAN 2′-0″. DIMENSION L1 (NOT C1) SHALL BE USED WITH ALTERNATE J3 BARS. WHERE L1 IS EQUAL TO 18″, 22″ AND 28″ FOR #4, #5 AND #6 BARS, RESPECTIVELY. ADDITIONAL P1 BARS ARE REQUIRED WITH ALTERNATE J3 BARS WITH A LENGTH EQUAL TO A1 BARS, AND SIZE AND SPACING EQUAL TO J3 BARS. NO ADDITIONAL PAYMENT WILL BE MADE FOR THIS SUBSTITUTION.

GENERAL NOTES:

IF DESIGN FILL IS BETWEEN TABULATED DESIGN FILLS, USE THE NEXT GREATER TABULATED DESIGN FILL, EXCEPT FOR DESIGN FILLS BETWEEN 2 FEET AND 4 FEET. FOR DESIGN FILLS BETWEEN 2 FEET AND 4 FEET USE THE GREATER MEMBER THICKNESS, AREA OF REINFORCEMENT AND BAR DIMENSIONS FROM THE 2 FEET AND 4 FEET TABULATED DESIGN FILLS. AREA OF REINFORCEMENT EQUALS BAR AREA PER FOOT SPACING.

SPECIAL DESIGNS ARE REQUIRED WHEN THE DESIGN FILL IS LESS THAN 1 FOOT OR GREATER THAN 50 FEET.

DIMENSIONS ARE IN INCHES UNLESS OTHERWISE SPECIFIED.

DESIGN FILLS ARE MEASURED FROM THE TOP OF TOP SLAB TO THE TOP OF EARTH FILL OR ROADWAY.

CULVERTS MEET STRENGTH AND SERVICEABILITY REQUIREMENTS FOR THE DESIGN VEHICULAR LIVE LOAD HL-93 MINUS THE LANE LOAD.


MISSOURI HIGHWAYS AND TRANSPORTATION COMMISSION
105 WEST CAPITOL
JEFFERSON CITY, MO 65102
1-888-ASK-MODOT (1-888-275-6636)


STATE OF MISSOURI
DENNIS W. HECKMAN
NUMBER PE-27141
PROFESSIONAL ENGINEER
THIS SHEET HAS BEEN SIGNED, SEALED AND DATED ELECTRONICALLY.

# CONCRETE SINGLE BOX CULVERT

MEMBER THICKNESS
BAR SIZE, SPACING & DIMENSIONS

SPAN (S): 9 FEET
HEIGHT (HT): 5 THRU 12 FEET

DATE EFFECTIVE: 04/01/2011
DATE PREPARED: 4/18/2011

703.17

SHEET NO.
7 OF 14

IF A SEAL IS PRESENT ON THIS SHEET IT HAS BEEN ELECTRONICALLY SEALED AND DATED.

## SPAN (S) = 10 FT  HEIGHT (HT) = 5 FT OR 6 FT OR 7 FT

| DESIGN FILL | MEMBER THICKNESS | | | TOP SLAB BARS | | | | | | | | | BOTTOM SLAB BARS | | | | | | | | | WALL BARS | | |
|---|---|---|---|---|---|---|---|---|---|---|---|---|---|---|---|---|---|---|---|---|---|---|---|---|
| | | | | A1 BARS | | J3 BARS | | | | | | | A2 BARS | | J4 BARS | | | | | | | B2 BARS | | |
| | TS | BS | TX | SIZE | SPA. | SIZE | SPA. | C1 | K2 | | | | SIZE | SPA. | SIZE | SPA. | C4 | K3 | | | | SIZE | SPA. | G1 |
| | | | | | | | | | HT=5′ | HT=6′ | HT=7′ | | | | | | | HT=5′ | HT=6′ | HT=7′ | | | | |
| 1 FT | 12 | 9 | 8 | 5 | 6 | 4 | 6 | 75.5 | 28.1 | 32.5 | 37.0 | | 5 | 6 | 6 | 6.5 | 52.5 | 65 | 77 | 89 | | 5 | 12 | 12 |
| 2 FT | 12 | 10 | 8 | 5 | 6 | 5 | 7.5 | 76.8 | 32.4 | 37.4 | 42.4 | | 5 | 6 | 5 | 6.5 | 44.8 | 66 | 78 | 90 | | 5 | 12 | 12 |
| 4 FT | 8 | 9 | 8 | 6 | 8 | 7 | 6.5 | 44.8 | 32.4 | 37.8 | 43.3 | | 6 | 7.5 | 6 | 7 | 42.3 | 65 | 77 | 89 | | 5 | 12 | 0 |
| 6 FT | 8 | 10 | 8 | 6 | 8.5 | 6 | 6 | 42.3 | 28.5 | 33.1 | 37.9 | | 6 | 7.5 | 5 | 6.5 | 35.9 | 66 | 78 | 90 | | 5 | 12 | 0 |
| 8 FT | 8 | 10 | 8 | 6 | 7.5 | 7 | 6 | 43.5 | 28.5 | 33.1 | 37.9 | | 6 | 7 | 5 | 6.5 | 33.3 | 66 | 78 | 90 | | 5 | 12 | 0 |
| 10 FT | 9 | 10 | 8 | 6 | 7 | 6 | 6.5 | 38.4 | 29.6 | 34.4 | 39.3 | | 6 | 6.5 | 6 | 7 | 35.9 | 66 | 78 | 90 | | 5 | 12 | 0 |
| 12 FT | 9 | 10 | 8 | 6 | 7.5 | 6 | 6.5 | 35.9 | 29.6 | 34.4 | 39.3 | | 6 | 6.5 | 6 | 7 | 34.5 | 66 | 78 | 90 | | 5 | 12 | 0 |
| 14 FT | 9 | 11 | 8 | 6 | 6.5 | 7 | 6 | 39.6 | 29.3 | 33.9 | 38.6 | | 6 | 6 | 5 | 7 | 29.5 | 67 | 79 | 91 | | 5 | 12 | 0 |
| 16 FT | 10 | 12 | 8 | 6 | 6 | 6 | 6 | 34.5 | 30.0 | 34.8 | 39.4 | | 6 | 6 | 5 | 7.5 | 28.1 | 68 | 80 | 92 | | 5 | 12 | 0 |
| 18 FT | 11 | 13 | 8 | 7 | 7.5 | 6 | 6.5 | 33.3 | 31.6 | 36.4 | 41.3 | | 7 | 7.5 | 5 | 8 | 28.1 | 69 | 81 | 93 | | 5 | 12 | 0 |
| 20 FT | 12 | 14 | 8 | 7 | 7.5 | 6 | 7 | 33.3 | 32.4 | 37.3 | 42.0 | | 7 | 7.5 | 5 | 8.5 | 26.9 | 70 | 82 | 94 | | 5 | 12 | 0 |
| 22 FT | 13 | 15 | 8 | 7 | 7 | 6 | 7.5 | 32.0 | 33.3 | 38.0 | 42.8 | | 7 | 7.5 | 5 | 8.5 | 26.9 | 71 | 83 | 95 | | 5 | 12 | 0 |
| 24 FT | 14 | 16 | 8 | 7 | 7 | 6 | 8 | 30.8 | 34.0 | 38.8 | 43.6 | | 7 | 7.5 | 5 | 8 | 26.9 | 72 | 84 | 96 | | 5 | 12 | 0 |
| 26 FT | 15 | 17 | 8 | 7 | 6.5 | 6 | 8 | 37.1 | 35.6 | 40.6 | 45.5 | | 7 | 7 | 5 | 7 | 26.9 | 73 | 85 | 97 | | 5 | 12 | 0 |
| 28 FT | 16 | 18 | 8 | 7 | 6.5 | 6 | 8.5 | 35.9 | 36.5 | 41.4 | 46.4 | | 7 | 7 | 5 | 6.5 | 26.9 | 74 | 86 | 98 | | 5 | 12 | 0 |
| 30 FT | 17 | 18 | 8 | 7 | 6.5 | 5 | 6 | 32.0 | 37.8 | 42.9 | 47.9 | | 7 | 6.5 | 5 | 6.5 | 26.9 | 74 | 86 | 98 | | 5 | 11.5 | 0 |
| 32 FT | 18 | 19 | 8 | 7 | 6.5 | 5 | 6 | 32.0 | 38.6 | 43.6 | 48.8 | | 7 | 6.5 | 5 | 6.5 | 26.9 | 75 | 87 | 99 | | 5 | 10 | 0 |
| 34 FT | 18 | 20 | 8 | 7 | 6 | 6 | 7.5 | 35.9 | 38.1 | 43.0 | 48.0 | | 7 | 6.5 | 5 | 6 | 26.9 | 76 | 88 | 100 | | 5 | 9.5 | 0 |
| 36 FT | 19 | 21 | 8 | 7 | 6 | 6 | 7.5 | 35.9 | 39.9 | 45.0 | 50.0 | | 7 | 6.5 | 6 | 7.5 | 30.8 | 77 | 89 | 101 | | 5 | 9.5 | 0 |
| 38 FT | 20 | 21 | 8 | 7 | 6 | 6 | 7.5 | 35.9 | 44.1 | 49.6 | 55.3 | | 7 | 6.5 | 6 | 7.5 | 30.8 | 77 | 89 | 101 | | 5 | 9.5 | 0 |
| 40 FT | 21 | 22 | 8 | 7 | 6 | 6 | 7 | 35.9 | 45.1 | 50.6 | 56.1 | | 7 | 6.5 | 6 | 7 | 30.8 | 78 | 90 | 102 | | 5 | 9 | 0 |
| 42 FT | 21 | 23 | 9 | 8 | 7.5 | 5 | 6 | 33.5 | 41.6 | 46.6 | 51.6 | | 7 | 6 | 5 | 6 | 28.4 | 79 | 91 | 103 | | 5 | 8.5 | 0 |
| 44 FT | 22 | 23 | 9 | 8 | 7.5 | 6 | 7.5 | 37.4 | 42.0 | 47.0 | 52.1 | | 7 | 6 | 5 | 6 | 28.4 | 79 | 91 | 103 | | 5 | 8.5 | 0 |
| 46 FT | 23 | 24 | 10 | 8 | 7.5 | 5 | 6.5 | 33.8 | 43.9 | 49.0 | 54.1 | | 7 | 6 | 5 | 6.5 | 28.6 | 80 | 92 | 104 | | 5 | 8.5 | 0 |
| 48 FT | 23 | 25 | 10 | 8 | 7 | 5 | 6 | 33.8 | 43.3 | 48.3 | 53.4 | | 7 | 6 | 5 | 6 | 28.6 | 81 | 93 | 105 | | 5 | 8 | 0 |
| 50 FT | 24 | 25 | 10 | 8 | 7 | 5 | 6 | 33.8 | 44.8 | 49.9 | 55.0 | | 7 | 6 | 5 | 6 | 28.6 | 81 | 93 | 105 | | 5 | 8 | 0 |

## SPAN (S) = 10 FT  HEIGHT (HT) = 8 FT OR 9 FT OR 10 FT

| DESIGN FILL | MEMBER THICKNESS | | | TOP SLAB BARS | | | | | | | | | BOTTOM SLAB BARS | | | | | | | | | WALL BARS | | |
|---|---|---|---|---|---|---|---|---|---|---|---|---|---|---|---|---|---|---|---|---|---|---|---|---|
| | | | | A1 BARS | | J3 BARS | | | | | | | A2 BARS | | J4 BARS | | | | | | | B2 BARS | | |
| | TS | BS | TX | SIZE | SPA. | SIZE | SPA. | C1 | K2 | | | | SIZE | SPA. | SIZE | SPA. | C4 | K3 | | | | SIZE | SPA. | G1 |
| | | | | | | | | | HT=8′ | HT=9′ | HT=10′ | | | | | | | HT=8′ | HT=9′ | HT=10′ | | | | |
| 1 FT | 12 | 11 | 8 | 5 | 6 | 5 | 8 | 76.8 | 33.0 | 36.5 | 40.0 | | 5 | 6 | 5 | 6 | 76.8 | 103 | 115 | 127 | | 5 | 12 | 12 |
| 2 FT | 12 | 11 | 8 | 6 | 8 | 5 | 7 | 76.8 | 33.0 | 36.5 | 40.0 | | 6 | 8 | 6 | 7.5 | 79.4 | 103 | 115 | 127 | | 5 | 11.5 | 12 |
| 4 FT | 8 | 10 | 9 | 6 | 8 | 6 | 6 | 59.4 | 28.4 | 31.5 | 34.6 | | 6 | 7.5 | 6 | 7 | 68.4 | 102 | 114 | 126 | | 5 | 12 | 0 |
| 6 FT | 8 | 10 | 9 | 6 | 8 | 6 | 6 | 51.6 | 32.8 | 36.3 | 39.9 | | 6 | 7.5 | 6 | 6.5 | 56.8 | 102 | 114 | 126 | | 5 | 11.5 | 0 |
| 8 FT | 9 | 10 | 9 | 6 | 8 | 6 | 7 | 49.0 | 33.0 | 36.6 | 40.3 | | 6 | 7 | 6 | 6 | 51.6 | 102 | 114 | 126 | | 5 | 11.5 | 0 |
| 10 FT | 9 | 11 | 9 | 6 | 7.5 | 6 | 6 | 47.8 | 30.0 | 33.3 | 36.5 | | 6 | 7 | 6 | 6.5 | 49.0 | 103 | 115 | 127 | | 5 | 11 | 0 |
| 12 FT | 9 | 11 | 9 | 6 | 7.5 | 6 | 6.5 | 43.9 | 30.0 | 33.3 | 36.5 | | 6 | 7 | 6 | 6.5 | 43.9 | 103 | 115 | 127 | | 5 | 12 | 0 |
| 14 FT | 10 | 11 | 9 | 6 | 7 | 6 | 6.5 | 42.6 | 31.4 | 34.8 | 38.1 | | 6 | 6 | 6 | 6 | 43.9 | 103 | 115 | 127 | | 5 | 12 | 0 |
| 16 FT | 10 | 12 | 9 | 6 | 6 | 6 | 6 | 42.6 | 30.5 | 33.8 | 37.0 | | 7 | 8 | 6 | 6.5 | 42.6 | 104 | 116 | 128 | | 5 | 10.5 | 0 |
| 18 FT | 11 | 13 | 9 | 6 | 6 | 6 | 6 | 42.6 | 31.0 | 34.3 | 37.5 | | 7 | 7.5 | 6 | 6.5 | 42.6 | 105 | 117 | 129 | | 5 | 9.5 | 0 |
| 20 FT | 12 | 14 | 9 | 7 | 7.5 | 6 | 6.5 | 41.3 | 32.8 | 36.1 | 39.5 | | 7 | 7.5 | 6 | 6.5 | 42.6 | 106 | 118 | 130 | | 5 | 8.5 | 0 |
| 22 FT | 13 | 15 | 9 | 7 | 7.5 | 6 | 6 | 41.3 | 33.4 | 36.6 | 40.0 | | 7 | 7.5 | 6 | 6.5 | 42.6 | 107 | 119 | 131 | | 5 | 8.5 | 0 |
| 24 FT | 14 | 16 | 10 | 7 | 7.5 | 6 | 7 | 41.6 | 35.1 | 38.6 | 42.0 | | 7 | 7.5 | 6 | 8 | 42.9 | 108 | 120 | 132 | | 5 | 8 | 0 |
| 26 FT | 15 | 17 | 11 | 7 | 7.5 | 6 | 7 | 48.5 | 35.6 | 39.1 | 42.6 | | 7 | 7.5 | 5 | 6 | 40.6 | 109 | 121 | 133 | | 5 | 8.5 | 0 |
| 28 FT | 16 | 18 | 11 | 7 | 7 | 6 | 7 | 48.5 | 36.3 | 39.8 | 43.3 | | 7 | 7.5 | 5 | 6 | 40.6 | 110 | 122 | 134 | | 5 | 7.5 | 0 |
| 30 FT | 17 | 19 | 12 | 7 | 7 | 6 | 7.5 | 48.9 | 38.1 | 41.8 | 45.3 | | 7 | 7 | 5 | 6 | 40.9 | 111 | 123 | 135 | | 5 | 8 | 0 |
| 32 FT | 17 | 19 | 12 | 7 | 6.5 | 6 | 7 | 48.9 | 38.1 | 41.8 | 45.3 | | 7 | 7 | 5 | 6 | 40.9 | 111 | 123 | 135 | | 5 | 7.5 | 0 |
| 34 FT | 18 | 20 | 12 | 7 | 6.5 | 6 | 7 | 48.9 | 38.8 | 42.3 | 45.9 | | 7 | 6.5 | 6 | 8.5 | 43.5 | 112 | 124 | 136 | | 5 | 7 | 0 |
| 36 FT | 19 | 21 | 12 | 7 | 6.5 | 6 | 6 | 48.9 | 39.3 | 42.9 | 46.5 | | 7 | 6.5 | 6 | 8 | 43.5 | 113 | 125 | 137 | | 5 | 7 | 0 |
| 38 FT | 19 | 21 | 13 | 7 | 6 | 6 | 6 | 49.3 | 39.3 | 42.9 | 46.5 | | 7 | 6.5 | 6 | 8 | 43.9 | 113 | 125 | 137 | | 5 | 7 | 0 |
| 40 FT | 20 | 22 | 13 | 7 | 6 | 6 | 6.5 | 49.3 | 41.3 | 45.0 | 48.6 | | 7 | 6.5 | 6 | 8 | 43.9 | 114 | 126 | 138 | | 5 | 6.5 | 0 |
| 42 FT | 21 | 23 | 13 | 7 | 6 | 6 | 6 | 49.3 | 41.9 | 45.6 | 49.3 | | 7 | 6.5 | 6 | 8 | 43.9 | 115 | 127 | 139 | | 5 | 6.5 | 0 |
| 44 FT | 21 | 23 | 14 | 7 | 6 | 6 | 6 | 49.6 | 41.9 | 45.6 | 49.3 | | 7 | 6 | 6 | 7.5 | 44.3 | 115 | 127 | 139 | | 5 | 6.5 | 0 |
| 46 FT | 22 | 24 | 14 | 7 | 6 | 6 | 6.5 | 49.6 | 42.5 | 46.3 | 49.9 | | 7 | 6 | 6 | 8 | 45.5 | 116 | 128 | 140 | | 5 | 6 | 0 |
| 48 FT | 23 | 25 | 14 | 8 | 7.5 | 6 | 6.5 | 49.6 | 43.1 | 46.8 | 50.5 | | 7 | 6 | 6 | 8 | 45.5 | 117 | 129 | 141 | | 5 | 6 | 0 |
| 50 FT | 23 | 25 | 14 | 8 | 7 | 6 | 6 | 49.6 | 43.1 | 46.8 | 50.5 | | 7 | 6 | 6 | 7.5 | 45.5 | 117 | 129 | 141 | | 5 | 6 | 0 |

## SPAN (S) = 10 FT  HEIGHT (HT) = 11 FT OR 12 FT OR 13 FT

| DESIGN FILL | MEMBER THICKNESS | | | TOP SLAB BARS | | | | | | | | | BOTTOM SLAB BARS | | | | | | | | | WALL BARS | | |
|---|---|---|---|---|---|---|---|---|---|---|---|---|---|---|---|---|---|---|---|---|---|---|---|---|
| | | | | A1 BARS | | J3 BARS | | | | | | | A2 BARS | | J4 BARS | | | | | | | B2 BARS | | |
| | TS | BS | TX | SIZE | SPA. | SIZE | SPA. | C1 | K2 | | | | SIZE | SPA. | SIZE | SPA. | C4 | K3 | | | | SIZE | SPA. | G1 |
| | | | | | | | | | HT=11′ | HT=12′ | HT=13′ | | | | | | | HT=11′ | HT=12′ | HT=13′ | | | | |
| 1 FT | 11 | 11 | 9 | 6 | 8 | 6 | 7.5 | 80.0 | 31.3 | 33.8 | 36.4 | | 6 | 7.5 | 6 | 6 | 80.0 | 139 | 151 | 163 | | 5 | 8.5 | 12 |
| 2 FT | 11 | 11 | 9 | 6 | 7.5 | 6 | 7 | 80.0 | 35.8 | 38.6 | 41.5 | | 6 | 7.5 | 6 | 6 | 80.0 | 139 | 151 | 163 | | 5 | 8.5 | 12 |
| 4 FT | 9 | 11 | 9 | 6 | 8 | 6 | 6.5 | 80.0 | 33.8 | 36.6 | 39.4 | | 6 | 7.5 | 6 | 6 | 80.0 | 139 | 151 | 163 | | 5 | 8 | 0 |
| 6 FT | 9 | 12 | 9 | 5 | 6 | 6 | 6 | 80.0 | 31.1 | 33.6 | 36.1 | | 6 | 7.5 | 6 | 6 | 80.0 | 140 | 152 | 164 | | 5 | 7.5 | 0 |
| 8 FT | 9 | 12 | 10 | 5 | 6 | 6 | 6.5 | 75.4 | 31.1 | 33.6 | 36.1 | | 6 | 7.5 | 6 | 6.5 | 80.6 | 140 | 152 | 164 | | 5 | 7.5 | 0 |
| 10 FT | 10 | 12 | 10 | 6 | 8 | 6 | 6.5 | 74.1 | 32.8 | 35.4 | 38.0 | | 6 | 7 | 6 | 6 | 80.6 | 140 | 152 | 164 | | 5 | 7 | 0 |
| 12 FT | 10 | 12 | 10 | 6 | 8.5 | 6 | 6.5 | 58.5 | 32.8 | 35.4 | 38.0 | | 6 | 7.5 | 6 | 6 | 71.5 | 140 | 152 | 164 | | 5 | 8 | 0 |
| 14 FT | 10 | 13 | 10 | 6 | 7.5 | 6 | 6 | 57.3 | 31.5 | 34.0 | 36.5 | | 6 | 7 | 6 | 6 | 74.1 | 141 | 153 | 165 | | 5 | 7 | 0 |
| 16 FT | 11 | 13 | 11 | 6 | 7 | 6 | 6.5 | 56.4 | 33.3 | 35.9 | 38.5 | | 6 | 6.5 | 6 | 6.5 | 65.5 | 141 | 153 | 165 | | 5 | 7.5 | 0 |
| 18 FT | 12 | 14 | 12 | 6 | 7 | 6 | 7.5 | 56.8 | 33.6 | 36.3 | 39.0 | | 6 | 6.5 | 6 | 7.5 | 63.4 | 142 | 154 | 166 | | 5 | 7 | 0 |
| 20 FT | 13 | 15 | 12 | 6 | 6.5 | 6 | 7 | 56.8 | 35.6 | 38.4 | 41.1 | | 6 | 6 | 6 | 7 | 64.6 | 143 | 155 | 167 | | 5 | 7 | 0 |
| 22 FT | 13 | 15 | 13 | 6 | 6 | 6 | 7 | 55.9 | 35.6 | 38.4 | 41.1 | | 7 | 8 | 6 | 7 | 61.1 | 143 | 155 | 167 | | 5 | 6.5 | 0 |
| 24 FT | 14 | 16 | 13 | 6 | 6 | 6 | 6.5 | 57.3 | 36.1 | 38.9 | 41.6 | | 7 | 7.5 | 6 | 7 | 61.1 | 144 | 156 | 168 | | 5 | 6.5 | 0 |
| 26 FT | 15 | 17 | 13 | 7 | 8 | 6 | 6 | 63.9 | 36.6 | 39.4 | 42.1 | | 7 | 7.5 | 6 | 6 | 62.5 | 145 | 157 | 169 | | 5 | 6.5 | 0 |
| 28 FT | 16 | 18 | 14 | 7 | 8 | 6 | 6.5 | 63.0 | 38.6 | 41.5 | 44.4 | | 7 | 7.5 | 6 | 6.5 | 61.6 | 146 | 158 | 170 | | 5 | 6 | 0 |
| 30 FT | 16 | 18 | 14 | 7 | 7 | 6 | 6 | 63.0 | 40.3 | 43.3 | 46.3 | | 7 | 7 | 6 | 6 | 61.6 | 146 | 158 | 170 | | 5 | 6 | 0 |
| 32 FT | 17 | 19 | 15 | 7 | 7 | 6 | 6 | 63.5 | 42.4 | 45.5 | 48.6 | | 7 | 7 | 6 | 6 | 60.8 | 147 | 159 | 171 | | 6 | 8 | 0 |
| 34 FT | 18 | 20 | 15 | 7 | 7 | 6 | 6 | 63.5 | 42.9 | 46.0 | 49.1 | | 7 | 7 | 6 | 6 | 62.1 | 148 | 160 | 172 | | 6 | 8 | 0 |
| 36 FT | 19 | 21 | 16 | 7 | 7 | 6 | 6 | 63.9 | 43.4 | 46.5 | 49.6 | | 7 | 7 | 6 | 6 | 62.5 | 149 | 161 | 173 | | 6 | 8 | 0 |
| 38 FT | 19 | 21 | 16 | 7 | 6.5 | 7 | 7.5 | 69.4 | 43.4 | 46.5 | 49.6 | | 7 | 6.5 | 6 | 6 | 61.3 | 149 | 161 | 173 | | 6 | 8 | 0 |
| 40 FT | 20 | 22 | 17 | 7 | 6.5 | 6 | 6 | 64.4 | 45.6 | 48.9 | 52.1 | | 7 | 6.5 | 6 | 6 | 61.6 | 150 | 162 | 174 | | 6 | 7.5 | 0 |
| 42 FT | 21 | 23 | 17 | 7 | 6.5 | 7 | 7.5 | 69.9 | 46.1 | 49.4 | 52.6 | | 7 | 6.5 | 6 | 6 | 63.0 | 151 | 163 | 175 | | 6 | 7.5 | 0 |
| 44 FT | 21 | 23 | 18 | 7 | 6.5 | 6 | 6 | 64.9 | 46.1 | 49.4 | 52.6 | | 7 | 6.5 | 6 | 6 | 62.1 | 151 | 163 | 175 | | 6 | 7 | 0 |
| 46 FT | 22 | 24 | 19 | 7 | 6.5 | 6 | 6 | 65.4 | 46.8 | 50.0 | 53.3 | | 7 | 6.5 | 6 | 6 | 62.5 | 152 | 164 | 176 | | 6 | 6.5 | 0 |
| 48 FT | 23 | 25 | 19 | 7 | 6 | 6 | 6 | 65.4 | 47.3 | 50.5 | 53.8 | | 7 | 6 | 6 | 6 | 62.5 | 153 | 165 | 177 | | 6 | 6.5 | 0 |
| 50 FT | 23 | 25 | 20 | 7 | 6 | 6 | 6 | 65.8 | 47.3 | 50.5 | 53.8 | | 7 | 6 | 6 | 6 | 63.0 | 153 | 165 | 177 | | 6 | 6.5 | 0 |

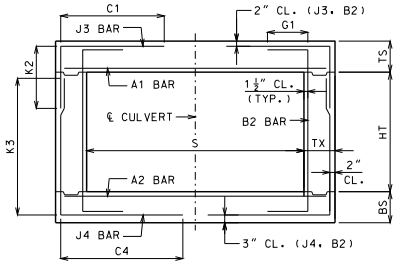


BAR DIMENSIONS DIAGRAM
SYMMETRICAL ABOUT ℄ CULVERT.

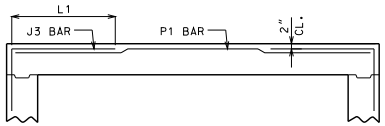


ALTERNATE J3 BAR

AT CONTRACTOR'S OPTION, ALTERNATE J3 BARS MAY BE USED WHEN THE DISTANCE BETWEEN THE ENDS OF J3 BARS IN THE TOP SLAB IS LESS THAN 2′-0″. DIMENSION L1 (NOT C1) SHALL BE USED WITH ALTERNATE J3 BARS. WHERE L1 IS EQUAL TO 18″, 22″ AND 28″ FOR #4, #5 AND #6 BARS, RESPECTIVELY. ADDITIONAL P1 BARS ARE REQUIRED WITH ALTERNATE J3 BARS WITH A LENGTH EQUAL TO A1 BARS, AND SIZE AND SPACING EQUAL TO J3 BARS. NO ADDITIONAL PAYMENT WILL BE MADE FOR THIS SUBSTITUTION.

GENERAL NOTES:

IF DESIGN FILL IS BETWEEN TABULATED DESIGN FILLS, USE THE NEXT GREATER TABULATED DESIGN FILL, EXCEPT FOR DESIGN FILLS BETWEEN 2 FEET AND 4 FEET. FOR DESIGN FILLS BETWEEN 2 FEET AND 4 FEET USE THE GREATER MEMBER THICKNESS, AREA OF REINFORCEMENT AND BAR DIMENSIONS FROM THE 2 FEET AND 4 FEET TABULATED DESIGN FILLS. AREA OF REINFORCEMENT EQUALS BAR AREA PER FOOT SPACING.

SPECIAL DESIGNS ARE REQUIRED WHEN THE DESIGN FILL IS LESS THAN 1 FOOT OR GREATER THAN 50 FEET.

DIMENSIONS ARE IN INCHES UNLESS OTHERWISE SPECIFIED.

DESIGN FILLS ARE MEASURED FROM THE TOP OF TOP SLAB TO THE TOP OF EARTH FILL OR ROADWAY.

CULVERTS MEET STRENGTH AND SERVICEABILITY REQUIREMENTS FOR THE DESIGN VEHICULAR LIVE LOAD HL-93 MINUS THE LANE LOAD.


MISSOURI HIGHWAYS AND TRANSPORTATION COMMISSION
105 WEST CAPITOL
JEFFERSON CITY, MO 65102
1-888-ASK-MODOT (1-888-275-6636)


STATE OF MISSOURI
DENNIS W. HECKMAN
NUMBER PE-27141
PROFESSIONAL ENGINEER
THIS SHEET HAS BEEN SIGNED, SEALED AND DATED ELECTRONICALLY.

# CONCRETE SINGLE BOX CULVERT

MEMBER THICKNESS
BAR SIZE, SPACING & DIMENSIONS

SPAN (S): 10 FEET
HEIGHT (HT): 5 THRU 13 FEET

DATE EFFECTIVE: 04/01/2011
DATE PREPARED: 4/18/2011

703.17

SHEET NO.
8 OF 14

IF A SEAL IS PRESENT ON THIS SHEET IT HAS BEEN ELECTRONICALLY SEALED AND DATED.

## SPAN (S) = 11 FT  HEIGHT (HT) = 6 FT OR 7 FT OR 8 FT

| DESIGN FILL | MEMBER THICKNESS | | | TOP SLAB BARS | | | | | | | | | BOTTOM SLAB BARS | | | | | | | | | WALL BARS | | |
|---|---|---|---|---|---|---|---|---|---|---|---|---|---|---|---|---|---|---|---|---|---|---|---|---|
| | | | | A1 BARS | | J3 BARS | | | | | | | A2 BARS | | J4 BARS | | | | | | | B2 BARS | | |
| | TS | BS | TX | SIZE | SPA. | SIZE | SPA. | C1 | K2 | | | | SIZE | SPA. | SIZE | SPA. | C4 | K3 | | | | SIZE | SPA. | G1 |
| | | | | | | | | | HT=6' | HT=7' | HT=8' | | | | | | | HT=6' | HT=7' | HT=8' | | | | |
| 1 FT | 12 | 10 | 8 | 6 | 7.5 | 5 | 7 | 82.6 | 32.0 | 36.4 | 40.6 | | 6 | 8 | 6 | 7.5 | 61.6 | 78 | 90 | 102 | | 5 | 12 | 12 |
| 2 FT | 12 | 10 | 8 | 6 | 7.5 | 5 | 6.5 | 82.6 | 32.0 | 36.4 | 40.6 | | 6 | 7.5 | 6 | 7 | 53.3 | 78 | 90 | 102 | | 5 | 12 | 12 |
| 4 FT | 9 | 10 | 8 | 6 | 7 | 6 | 6.5 | 46.3 | 29.3 | 33.4 | 37.4 | | 6 | 7 | 6 | 7.5 | 46.3 | 78 | 90 | 102 | | 5 | 12 | 0 |
| 6 FT | 9 | 10 | 8 | 6 | 7 | 6 | 6.5 | 43.4 | 29.3 | 33.4 | 37.4 | | 6 | 6.5 | 6 | 6.5 | 42.0 | 78 | 90 | 102 | | 5 | 12 | 0 |
| 8 FT | 9 | 10 | 8 | 6 | 6.5 | 6 | 6 | 42.0 | 33.5 | 38.3 | 42.9 | | 6 | 6 | 6 | 6 | 40.6 | 78 | 90 | 102 | | 5 | 12 | 0 |
| 10 FT | 10 | 11 | 8 | 6 | 6.5 | 6 | 6.5 | 39.3 | 30.8 | 35.0 | 39.3 | | 7 | 8 | 6 | 7 | 37.8 | 79 | 91 | 103 | | 5 | 12 | 0 |
| 12 FT | 10 | 11 | 8 | 6 | 6.5 | 6 | 6.5 | 37.8 | 30.8 | 35.0 | 39.3 | | 6 | 6 | 6 | 7 | 35.0 | 79 | 91 | 103 | | 5 | 12 | 0 |
| 14 FT | 10 | 11 | 8 | 7 | 7.5 | 6 | 6 | 36.4 | 34.4 | 39.0 | 43.6 | | 7 | 7 | 6 | 6 | 35.0 | 79 | 91 | 103 | | 5 | 12 | 0 |
| 16 FT | 11 | 13 | 8 | 7 | 7 | 6 | 6 | 36.4 | 31.9 | 36.0 | 40.3 | | 7 | 7 | 5 | 6.5 | 30.8 | 81 | 93 | 105 | | 5 | 12 | 0 |
| 18 FT | 11 | 14 | 8 | 7 | 6 | 7 | 6 | 39.3 | 31.3 | 35.4 | 39.5 | | 7 | 6.5 | 5 | 7 | 29.4 | 82 | 94 | 106 | | 5 | 12 | 0 |
| 20 FT | 13 | 15 | 8 | 7 | 6.5 | 6 | 6.5 | 33.6 | 33.3 | 37.5 | 41.6 | | 7 | 6.5 | 5 | 7 | 29.4 | 83 | 95 | 107 | | 5 | 12 | 0 |
| 22 FT | 14 | 16 | 8 | 7 | 6 | 6 | 6.5 | 33.6 | 34.9 | 39.3 | 43.5 | | 7 | 6.5 | 5 | 7 | 29.4 | 84 | 96 | 108 | | 5 | 12 | 0 |
| 24 FT | 15 | 17 | 8 | 7 | 6 | 6 | 6.5 | 39.3 | 35.6 | 40.0 | 44.3 | | 7 | 6.5 | 5 | 6.5 | 29.4 | 85 | 97 | 109 | | 5 | 12 | 0 |
| 26 FT | 16 | 18 | 8 | 7 | 6 | 6 | 6.5 | 37.8 | 36.4 | 40.6 | 45.0 | | 7 | 6.5 | 5 | 6.5 | 29.4 | 86 | 98 | 110 | | 5 | 10 | 0 |
| 28 FT | 17 | 19 | 8 | 8 | 7.5 | 6 | 6.5 | 37.8 | 37.1 | 41.4 | 45.8 | | 7 | 6 | 5 | 6.5 | 29.4 | 87 | 99 | 111 | | 5 | 9.5 | 0 |
| 30 FT | 18 | 20 | 8 | 8 | 7.5 | 6 | 6 | 37.8 | 38.9 | 43.3 | 47.8 | | 7 | 6 | 5 | 6 | 29.4 | 88 | 100 | 112 | | 5 | 9.5 | 0 |
| 32 FT | 19 | 21 | 9 | 8 | 7.5 | 6 | 7 | 39.5 | 39.6 | 44.0 | 48.5 | | 7 | 6 | 5 | 6.5 | 29.6 | 89 | 101 | 113 | | 5 | 9 | 0 |
| 34 FT | 20 | 22 | 10 | 8 | 7.5 | 6 | 8 | 39.8 | 40.4 | 44.8 | 49.3 | | 7 | 6 | 5 | 7 | 31.3 | 90 | 102 | 114 | | 5 | 10 | 0 |
| 36 FT | 21 | 23 | 10 | 8 | 7.5 | 6 | 8 | 39.8 | 41.1 | 45.5 | 50.0 | | 7 | 6 | 5 | 6.5 | 31.3 | 91 | 103 | 115 | | 5 | 9 | 0 |
| 38 FT | 22 | 23 | 10 | 8 | 7 | 6 | 8 | 39.8 | 42.5 | 47.1 | 51.6 | | 8 | 7.5 | 5 | 6.5 | 31.3 | 91 | 103 | 115 | | 5 | 8 | 0 |
| 40 FT | 22 | 24 | 11 | 8 | 7 | 6 | 7 | 40.0 | 43.0 | 47.5 | 52.0 | | 8 | 7.5 | 5 | 7 | 31.5 | 92 | 104 | 116 | | 5 | 9 | 0 |
| 42 FT | 23 | 25 | 11 | 8 | 7 | 6 | 8 | 40.0 | 43.8 | 48.3 | 52.9 | | 8 | 7.5 | 5 | 7 | 31.5 | 93 | 105 | 117 | | 5 | 8.5 | 0 |
| 44 FT | 24 | 26 | 11 | 8 | 7 | 6 | 8 | 40.0 | 44.5 | 49.0 | 53.6 | | 8 | 7.5 | 5 | 6.5 | 31.5 | 94 | 106 | 118 | | 5 | 7.5 | 0 |
| 46 FT | 25 | 26 | 11 | 8 | 6.5 | 6 | 8 | 40.0 | 46.0 | 50.8 | 55.4 | | 8 | 7 | 5 | 6.5 | 31.5 | 94 | 106 | 118 | | 5 | 7.5 | 0 |
| 48 FT | 25 | 27 | 11 | 8 | 6.5 | 6 | 7.5 | 40.0 | 45.3 | 49.8 | 54.4 | | 8 | 7 | 5 | 6 | 31.5 | 95 | 107 | 119 | | 5 | 7.5 | 0 |
| 50 FT | 26 | 27 | 11 | 8 | 6.5 | 6 | 8 | 40.0 | 46.8 | 51.5 | 56.1 | | 8 | 7 | 5 | 6 | 31.5 | 95 | 107 | 119 | | 5 | 7.5 | 0 |

## SPAN (S) = 11 FT  HEIGHT (HT) = 9 FT OR 10 FT OR 11 FT

| DESIGN FILL | MEMBER THICKNESS | | | TOP SLAB BARS | | | | | | | | | BOTTOM SLAB BARS | | | | | | | | | WALL BARS | | |
|---|---|---|---|---|---|---|---|---|---|---|---|---|---|---|---|---|---|---|---|---|---|---|---|---|
| | | | | A1 BARS | | J3 BARS | | | | | | | A2 BARS | | J4 BARS | | | | | | | B2 BARS | | |
| | TS | BS | TX | SIZE | SPA. | SIZE | SPA. | C1 | K2 | | | | SIZE | SPA. | SIZE | SPA. | C4 | K3 | | | | SIZE | SPA. | G1 |
| | | | | | | | | | HT=9' | HT=10' | HT=11' | | | | | | | HT=9' | HT=10' | HT=11' | | | | |
| 1 FT | 12 | 11 | 8 | 6 | 7.5 | 5 | 7 | 82.6 | 32.8 | 35.9 | 39.0 | | 6 | 7.5 | 6 | 6.5 | 85.4 | 115 | 127 | 139 | | 5 | 9.5 | 12 |
| 2 FT | 12 | 11 | 8 | 6 | 7 | 5 | 6.5 | 82.6 | 32.8 | 35.9 | 39.0 | | 6 | 7 | 6 | 6 | 85.4 | 115 | 127 | 139 | | 5 | 9.5 | 12 |
| 4 FT | 9 | 10 | 9 | 6 | 7 | 6 | 6.5 | 70.5 | 34.1 | 37.5 | 40.9 | | 6 | 6.5 | 6 | 6 | 73.4 | 114 | 126 | 138 | | 5 | 9.5 | 0 |
| 6 FT | 9 | 11 | 9 | 6 | 7.5 | 6 | 6 | 57.8 | 30.8 | 33.8 | 36.8 | | 6 | 6.5 | 6 | 6 | 64.9 | 115 | 127 | 139 | | 5 | 9.5 | 0 |
| 8 FT | 9 | 11 | 9 | 6 | 7 | 7 | 6.5 | 56.4 | 30.8 | 33.8 | 36.8 | | 6 | 6 | 6 | 6 | 56.4 | 115 | 127 | 139 | | 5 | 9 | 0 |
| 10 FT | 10 | 12 | 9 | 6 | 6.5 | 6 | 6 | 50.8 | 31.3 | 34.3 | 37.3 | | 6 | 6 | 6 | 6 | 55.0 | 116 | 128 | 140 | | 5 | 8.5 | 0 |
| 12 FT | 10 | 12 | 9 | 6 | 6.5 | 6 | 6 | 46.5 | 31.3 | 34.3 | 37.3 | | 6 | 6 | 6 | 6 | 48.0 | 116 | 128 | 140 | | 5 | 10 | 0 |
| 14 FT | 11 | 12 | 9 | 6 | 6 | 6 | 6.5 | 45.1 | 35.3 | 38.6 | 42.0 | | 7 | 7.5 | 6 | 6 | 46.5 | 116 | 128 | 140 | | 5 | 9 | 0 |
| 16 FT | 11 | 13 | 10 | 7 | 7.5 | 6 | 6 | 45.5 | 33.0 | 36.1 | 39.3 | | 7 | 7 | 6 | 6.5 | 46.9 | 117 | 129 | 141 | | 5 | 9.5 | 0 |
| 18 FT | 12 | 14 | 10 | 7 | 7 | 6 | 6.5 | 45.5 | 32.3 | 35.3 | 38.3 | | 7 | 7 | 6 | 6.5 | 45.5 | 118 | 130 | 142 | | 5 | 8.5 | 0 |
| 20 FT | 13 | 15 | 10 | 7 | 7 | 6 | 6 | 45.5 | 34.0 | 37.1 | 40.3 | | 7 | 6.5 | 6 | 6.5 | 45.5 | 119 | 131 | 143 | | 5 | 8 | 0 |
| 22 FT | 14 | 16 | 11 | 7 | 7 | 6 | 6.5 | 45.8 | 35.9 | 39.1 | 42.4 | | 7 | 6.5 | 6 | 7.5 | 45.8 | 120 | 132 | 144 | | 5 | 8 | 0 |
| 24 FT | 15 | 17 | 11 | 7 | 6.5 | 6 | 6 | 51.5 | 36.5 | 39.8 | 42.9 | | 7 | 6.5 | 6 | 7.5 | 45.8 | 121 | 133 | 145 | | 5 | 7.5 | 0 |
| 26 FT | 16 | 18 | 12 | 7 | 6.5 | 6 | 6.5 | 51.9 | 37.0 | 40.3 | 43.5 | | 7 | 6.5 | 6 | 8 | 46.1 | 122 | 134 | 146 | | 5 | 7.5 | 0 |
| 28 FT | 17 | 19 | 12 | 7 | 6.5 | 6 | 6.5 | 51.9 | 37.5 | 40.8 | 44.0 | | 7 | 6.5 | 6 | 7.5 | 46.1 | 123 | 135 | 147 | | 5 | 7 | 0 |
| 30 FT | 18 | 20 | 13 | 7 | 6.5 | 6 | 6.5 | 52.3 | 38.1 | 41.3 | 44.5 | | 7 | 6.5 | 6 | 8 | 46.4 | 124 | 136 | 148 | | 5 | 7.5 | 0 |
| 32 FT | 19 | 21 | 13 | 7 | 6 | 6 | 6.5 | 52.3 | 40.0 | 43.4 | 46.8 | | 7 | 6 | 6 | 7.5 | 46.4 | 125 | 137 | 149 | | 5 | 6.5 | 0 |
| 34 FT | 20 | 22 | 13 | 7 | 6 | 6 | 6 | 52.3 | 40.6 | 44.0 | 47.4 | | 7 | 6 | 6 | 7.5 | 46.4 | 126 | 138 | 150 | | 5 | 6.5 | 0 |
| 36 FT | 21 | 22 | 13 | 7 | 6 | 6 | 6 | 52.3 | 45.3 | 49.0 | 52.8 | | 7 | 6 | 6 | 6.5 | 46.4 | 126 | 138 | 150 | | 5 | 6.5 | 0 |
| 38 FT | 21 | 23 | 14 | 8 | 7.5 | 6 | 6 | 52.5 | 41.1 | 44.5 | 47.9 | | 7 | 6 | 6 | 7.5 | 46.8 | 127 | 139 | 151 | | 5 | 6 | 0 |
| 40 FT | 22 | 24 | 14 | 8 | 7.5 | 6 | 6 | 52.5 | 43.3 | 46.8 | 50.1 | | 8 | 7.5 | 6 | 7 | 48.1 | 128 | 140 | 152 | | 5 | 6 | 0 |
| 42 FT | 23 | 25 | 15 | 8 | 7.5 | 6 | 6.5 | 52.9 | 48.4 | 52.1 | 56.0 | | 8 | 7.5 | 6 | 7.5 | 48.5 | 129 | 141 | 153 | | 5 | 6 | 0 |
| 44 FT | 24 | 25 | 15 | 8 | 7 | 6 | 6.5 | 52.9 | 48.6 | 52.5 | 56.4 | | 8 | 7 | 6 | 6.5 | 48.5 | 129 | 141 | 153 | | 6 | 8 | 0 |
| 46 FT | 24 | 26 | 15 | 8 | 7 | 6 | 6 | 52.9 | 49.0 | 52.8 | 56.6 | | 8 | 7 | 6 | 7 | 48.5 | 130 | 142 | 154 | | 6 | 8 | 0 |
| 48 FT | 25 | 27 | 16 | 8 | 7 | 6 | 6 | 53.3 | 49.6 | 53.5 | 57.3 | | 8 | 7 | 6 | 7.5 | 48.9 | 131 | 143 | 155 | | 6 | 8 | 0 |
| 50 FT | 26 | 27 | 16 | 8 | 6.5 | 6 | 6 | 53.3 | 51.5 | 55.5 | 59.4 | | 8 | 7 | 6 | 6.5 | 48.9 | 131 | 143 | 155 | | 6 | 8 | 0 |

## SPAN (S) = 11 FT  HEIGHT (HT) = 12 FT OR 13 FT OR 14 FT

| DESIGN FILL | MEMBER THICKNESS | | | TOP SLAB BARS | | | | | | | | | BOTTOM SLAB BARS | | | | | | | | | WALL BARS | | |
|---|---|---|---|---|---|---|---|---|---|---|---|---|---|---|---|---|---|---|---|---|---|---|---|---|
| | | | | A1 BARS | | J3 BARS | | | | | | | A2 BARS | | J4 BARS | | | | | | | B2 BARS | | |
| | TS | BS | TX | SIZE | SPA. | SIZE | SPA. | C1 | K2 | | | | SIZE | SPA. | SIZE | SPA. | C4 | K3 | | | | SIZE | SPA. | G1 |
| | | | | | | | | | HT=12' | HT=13' | HT=14' | | | | | | | HT=12' | HT=13' | HT=14' | | | | |
| 1 FT | 12 | 12 | 9 | 6 | 7.5 | 6 | 7 | 86.0 | 32.6 | 35.0 | 37.4 | | 6 | 7.5 | 6 | 6 | 86.0 | 152 | 164 | 176 | | 5 | 8.5 | 12 |
| 2 FT | 12 | 12 | 9 | 6 | 7 | 6 | 6.5 | 86.0 | 34.3 | 36.8 | 39.3 | | 6 | 7 | 6 | 6 | 86.0 | 152 | 164 | 176 | | 5 | 8 | 12 |
| 4 FT | 9 | 11 | 10 | 6 | 7 | 6 | 6 | 86.6 | 33.4 | 35.9 | 38.4 | | 6 | 6.5 | 6 | 6 | 86.6 | 151 | 163 | 175 | | 5 | 7.5 | 0 |
| 6 FT | 9 | 12 | 10 | 6 | 7.5 | 6 | 6 | 86.6 | 33.6 | 36.1 | 38.6 | | 6 | 6.5 | 6 | 6 | 88.0 | 152 | 164 | 176 | | 5 | 7 | 0 |
| 8 FT | 10 | 13 | 10 | 6 | 7.5 | 6 | 6 | 86.6 | 34.0 | 36.5 | 39.0 | | 6 | 7 | 6 | 6 | 86.6 | 153 | 165 | 177 | | 5 | 6.5 | 0 |
| 10 FT | 10 | 13 | 11 | 6 | 7 | 6 | 6 | 70.1 | 34.0 | 36.5 | 39.0 | | 6 | 6.5 | 6 | 6.5 | 88.6 | 153 | 165 | 177 | | 5 | 6.5 | 0 |
| 12 FT | 10 | 13 | 11 | 6 | 7.5 | 6 | 6 | 60.0 | 32.4 | 34.8 | 37.3 | | 6 | 6.5 | 6 | 6.5 | 74.4 | 153 | 165 | 177 | | 5 | 7.5 | 0 |
| 14 FT | 11 | 13 | 11 | 6 | 6.5 | 6 | 6 | 60.0 | 35.9 | 38.5 | 41.1 | | 6 | 6 | 6 | 6 | 70.1 | 153 | 165 | 177 | | 5 | 7 | 0 |
| 16 FT | 12 | 14 | 12 | 6 | 6.5 | 6 | 7 | 60.5 | 36.3 | 39.0 | 41.6 | | 7 | 8 | 6 | 6.5 | 67.6 | 154 | 166 | 178 | | 5 | 7 | 0 |
| 18 FT | 13 | 15 | 13 | 6 | 6 | 6 | 7 | 59.5 | 38.4 | 41.1 | 43.9 | | 7 | 7.5 | 6 | 7 | 65.3 | 155 | 167 | 179 | | 5 | 6.5 | 0 |
| 20 FT | 14 | 16 | 13 | 6 | 6 | 6 | 6.5 | 60.9 | 38.9 | 41.6 | 44.4 | | 7 | 7.5 | 6 | 6.5 | 66.8 | 156 | 168 | 180 | | 5 | 6.5 | 0 |
| 22 FT | 14 | 17 | 14 | 7 | 7.5 | 6 | 6.5 | 59.9 | 39.1 | 41.9 | 44.6 | | 7 | 7 | 6 | 6.5 | 64.3 | 157 | 169 | 181 | | 5 | 6 | 0 |
| 24 FT | 15 | 17 | 14 | 7 | 7 | 6 | 6 | 65.8 | 39.4 | 42.1 | 44.9 | | 7 | 6.5 | 6 | 6 | 64.3 | 157 | 169 | 181 | | 5 | 6 | 0 |
| 26 FT | 16 | 18 | 15 | 7 | 7 | 6 | 6 | 66.1 | 41.5 | 44.4 | 47.3 | | 7 | 6.5 | 6 | 6 | 63.3 | 158 | 170 | 182 | | 6 | 8 | 0 |
| 28 FT | 17 | 19 | 15 | 7 | 7 | 6 | 6 | 66.1 | 42.0 | 44.9 | 47.8 | | 7 | 6.5 | 6 | 6 | 64.6 | 159 | 171 | 183 | | 6 | 8 | 0 |
| 30 FT | 18 | 20 | 16 | 7 | 7 | 6 | 6 | 66.6 | 42.5 | 45.4 | 48.3 | | 7 | 6.5 | 6 | 6 | 63.6 | 160 | 172 | 184 | | 6 | 8 | 0 |
| 32 FT | 19 | 21 | 16 | 7 | 6.5 | 7 | 8 | 72.5 | 44.8 | 47.8 | 50.8 | | 7 | 6.5 | 7 | 8 | 68.1 | 161 | 173 | 185 | | 6 | 8 | 0 |
| 34 FT | 20 | 22 | 16 | 7 | 6.5 | 7 | 7 | 72.5 | 45.3 | 48.3 | 51.3 | | 7 | 6.5 | 7 | 7 | 68.1 | 162 | 174 | 186 | | 6 | 8 | 0 |
| 36 FT | 20 | 22 | 17 | 7 | 6 | 7 | 7.5 | 71.5 | 50.6 | 54.0 | 57.4 | | 7 | 6 | 7 | 7 | 67.0 | 162 | 174 | 186 | | 6 | 7.5 | 0 |
| 38 FT | 21 | 23 | 18 | 7 | 6 | 7 | 7.5 | 72.0 | 45.8 | 48.8 | 51.8 | | 7 | 6 | 7 | 7.5 | 67.5 | 163 | 175 | 187 | | 6 | 7 | 0 |
| 40 FT | 22 | 24 | 18 | 7 | 6 | 7 | 7 | 73.5 | 46.3 | 49.3 | 52.3 | | 7 | 6 | 7 | 7.5 | 69.0 | 164 | 176 | 188 | | 6 | 7 | 0 |
| 42 FT | 23 | 25 | 19 | 7 | 6 | 7 | 7.5 | 74.0 | 48.6 | 51.8 | 54.9 | | 7 | 6 | 7 | 8 | 68.0 | 165 | 177 | 189 | | 6 | 6.5 | 0 |
| 44 FT | 23 | 26 | 20 | 7 | 6 | 7 | 7.5 | 73.0 | 47.0 | 50.0 | 53.0 | | 7 | 6 | 6 | 6 | 65.4 | 166 | 178 | 190 | | 6 | 6.5 | 0 |
| 46 FT | 24 | 26 | 20 | 8 | 7.5 | 7 | 7 | 73.0 | 49.1 | 52.3 | 55.4 | | 8 | 7.5 | 7 | 7.5 | 68.4 | 166 | 178 | 190 | | 6 | 6.5 | 0 |
| 48 FT | 25 | 27 | 21 | 8 | 7.5 | 7 | 7.5 | 73.5 | 49.6 | 52.8 | 55.9 | | 8 | 7.5 | 7 | 8 | 68.9 | 167 | 179 | 191 | | 6 | 6 | 0 |
| 50 FT | 25 | 27 | 21 | 8 | 7 | 7 | 7 | 73.5 | 49.6 | 52.8 | 55.9 | | 8 | 7 | 7 | 7 | 68.9 | 167 | 179 | 191 | | 6 | 6 | 0 |

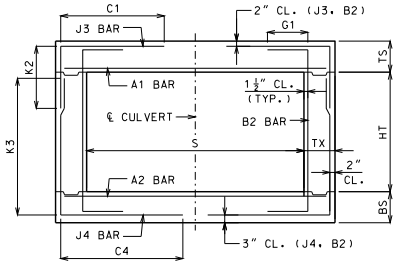


BAR DIMENSIONS DIAGRAM
SYMMETRICAL ABOUT ℄ CULVERT.

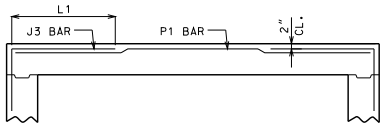


ALTERNATE J3 BAR

AT CONTRACTOR'S OPTION, ALTERNATE J3 BARS MAY BE USED WHEN THE DISTANCE BETWEEN THE ENDS OF J3 BARS IN THE TOP SLAB IS LESS THAN 2'-0". DIMENSION L1 (NOT C1) SHALL BE USED WITH ALTERNATE J3 BARS. WHERE L1 IS EQUAL TO 18", 22" AND 28" FOR #4, #5 AND #6 BARS, RESPECTIVELY. ADDITIONAL P1 BARS ARE REQUIRED WITH ALTERNATE J3 BARS WITH A LENGTH EQUAL TO A1 BARS, AND SIZE AND SPACING EQUAL TO J3 BARS. NO ADDITIONAL PAYMENT WILL BE MADE FOR THIS SUBSTITUTION.

GENERAL NOTES:

IF DESIGN FILL IS BETWEEN TABULATED DESIGN FILLS, USE THE NEXT GREATER TABULATED DESIGN FILL, EXCEPT FOR DESIGN FILLS BETWEEN 2 FEET AND 4 FEET. FOR DESIGN FILLS BETWEEN 2 FEET AND 4 FEET USE THE GREATER MEMBER THICKNESS, AREA OF REINFORCEMENT AND BAR DIMENSIONS FROM THE 2 FEET AND 4 FEET TABULATED DESIGN FILLS. AREA OF REINFORCEMENT EQUALS BAR AREA PER FOOT SPACING.

SPECIAL DESIGNS ARE REQUIRED WHEN THE DESIGN FILL IS LESS THAN 1 FOOT OR GREATER THAN 50 FEET.

DIMENSIONS ARE IN INCHES UNLESS OTHERWISE SPECIFIED.

DESIGN FILLS ARE MEASURED FROM THE TOP OF TOP SLAB TO THE TOP OF EARTH FILL OR ROADWAY.

CULVERTS MEET STRENGTH AND SERVICEABILITY REQUIREMENTS FOR THE DESIGN VEHICULAR LIVE LOAD HL-93 MINUS THE LANE LOAD.


MISSOURI HIGHWAYS AND TRANSPORTATION COMMISSION
105 WEST CAPITOL
JEFFERSON CITY, MO 65102
1-888-ASK-MODOT (1-888-275-6636)


DENNIS W. HECKMAN NUMBER PE-27141 STATE OF MISSOURI PROFESSIONAL ENGINEER
THIS SHEET HAS BEEN SIGNED, SEALED AND DATED ELECTRONICALLY.

# CONCRETE SINGLE BOX CULVERT

MEMBER THICKNESS
BAR SIZE, SPACING & DIMENSIONS

SPAN (S): 11 FEET
HEIGHT (HT): 6 THRU 14 FEET

DATE EFFECTIVE: 04/01/2011
DATE PREPARED: 4/18/2011

703.17

SHEET NO.
9 OF 14

IF A SEAL IS PRESENT ON THIS SHEET IT HAS BEEN ELECTRONICALLY SEALED AND DATED.

## SPAN (S) = 12 FT  HEIGHT (HT) = 6 FT OR 7 FT OR 8 FT

| DESIGN FILL | MEMBER THICKNESS | | | TOP SLAB BARS | | | | | | | | | BOTTOM SLAB BARS | | | | | | | | | WALL BARS | | |
|---|---|---|---|---|---|---|---|---|---|---|---|---|---|---|---|---|---|---|---|---|---|---|---|---|
| | | | | A1 BARS | | J3 BARS | | | | | | | A2 BARS | | J4 BARS | | | | | | | B2 BARS | | |
| | | | | | | | | | K2 | | | | | | | | | K3 | | | | | | |
| | TS | BS | TX | SIZE | SPA. | SIZE | SPA. | C1 | HT=6' | HT=7' | HT=8' | | SIZE | SPA. | SIZE | SPA. | C4 | HT=6' | HT=7' | HT=8' | | SIZE | SPA. | G1 |
| 1 FT | 13 | 10 | 8 | 6 | 7.5 | 5 | 8.5 | 89.6 | 33.3 | 37.8 | 42.1 | | 6 | 7.5 | 6 | 6.5 | 57.8 | 78 | 90 | 102 | | 5 | 12 | 12 |
| 2 FT | 14 | 10 | 8 | 6 | 7 | 5 | 8.5 | 89.6 | 34.6 | 39.1 | 43.8 | | 6 | 7 | 6 | 6 | 51.6 | 78 | 90 | 102 | | 5 | 12 | 12 |
| 4 FT | 10 | 11 | 8 | 6 | 6.5 | 6 | 6.5 | 47.1 | 30.8 | 35.0 | 39.3 | | 6 | 6.5 | 5 | 6.5 | 42.5 | 79 | 91 | 103 | | 5 | 12 | 0 |
| 6 FT | 10 | 11 | 8 | 6 | 6.5 | 6 | 6.5 | 44.1 | 30.8 | 35.0 | 39.3 | | 6 | 6 | 5 | 6 | 39.5 | 79 | 91 | 103 | | 5 | 12 | 0 |
| 8 FT | 10 | 11 | 8 | 6 | 6 | 6 | 6.5 | 41.0 | 30.8 | 35.0 | 39.3 | | 7 | 7.5 | 6 | 6.5 | 39.5 | 79 | 91 | 103 | | 5 | 12 | 0 |
| 10 FT | 10 | 11 | 8 | 7 | 7 | 7 | 6 | 42.5 | 34.4 | 39.0 | 43.6 | | 7 | 6.5 | 6 | 6 | 38.0 | 79 | 91 | 103 | | 5 | 12 | 0 |
| 12 FT | 11 | 12 | 8 | 7 | 7 | 6 | 6 | 38.0 | 35.1 | 39.8 | 44.5 | | 7 | 6.5 | 6 | 6.5 | 36.5 | 80 | 92 | 104 | | 5 | 12 | 0 |
| 14 FT | 11 | 13 | 8 | 7 | 7 | 6 | 6 | 36.5 | 31.9 | 36.0 | 40.3 | | 7 | 6.5 | 5 | 7 | 30.4 | 81 | 93 | 105 | | 5 | 12 | 0 |
| 16 FT | 12 | 14 | 8 | 7 | 6.5 | 6 | 6 | 35.0 | 32.5 | 36.8 | 41.0 | | 7 | 6.5 | 5 | 7 | 30.4 | 82 | 94 | 106 | | 5 | 12 | 0 |
| 18 FT | 13 | 15 | 8 | 7 | 6 | 6 | 6.5 | 33.5 | 33.3 | 37.5 | 41.6 | | 7 | 6 | 5 | 6.5 | 30.4 | 83 | 95 | 107 | | 5 | 12 | 0 |
| 20 FT | 15 | 17 | 8 | 7 | 6 | 6 | 7 | 39.5 | 35.6 | 40.0 | 44.3 | | 7 | 6.5 | 5 | 7 | 30.4 | 85 | 97 | 109 | | 5 | 12 | 0 |
| 22 FT | 16 | 18 | 8 | 7 | 6 | 6 | 7 | 39.5 | 36.4 | 40.6 | 45.0 | | 7 | 6 | 5 | 6.5 | 30.4 | 86 | 98 | 110 | | 5 | 12 | 0 |
| 24 FT | 17 | 19 | 8 | 8 | 7.5 | 6 | 7 | 39.5 | 37.1 | 41.4 | 45.8 | | 7 | 6 | 5 | 6.5 | 30.4 | 87 | 99 | 111 | | 5 | 11 | 0 |
| 26 FT | 18 | 20 | 8 | 8 | 7 | 6 | 7 | 39.5 | 38.9 | 43.3 | 47.8 | | 7 | 6 | 5 | 6 | 30.4 | 88 | 100 | 112 | | 5 | 9.5 | 0 |
| 28 FT | 19 | 21 | 8 | 8 | 7 | 6 | 7 | 39.5 | 39.6 | 44.0 | 48.5 | | 7 | 6 | 6 | 7.5 | 33.5 | 89 | 101 | 113 | | 5 | 9.5 | 0 |
| 30 FT | 20 | 21 | 8 | 8 | 7 | 6 | 6.5 | 39.5 | 44.3 | 49.3 | 54.1 | | 8 | 7 | 6 | 7.5 | 33.5 | 89 | 101 | 113 | | 5 | 9.5 | 0 |
| 32 FT | 21 | 23 | 9 | 8 | 7 | 6 | 7.5 | 39.8 | 41.1 | 45.5 | 50.0 | | 8 | 7.5 | 5 | 6 | 30.6 | 91 | 103 | 115 | | 5 | 8.5 | 0 |
| 34 FT | 22 | 23 | 9 | 8 | 6.5 | 6 | 7.5 | 39.8 | 42.5 | 47.1 | 51.6 | | 8 | 7 | 5 | 6 | 30.6 | 91 | 103 | 115 | | 5 | 8.5 | 0 |
| 36 FT | 23 | 24 | 9 | 8 | 6.5 | 6 | 7 | 39.8 | 47.9 | 52.9 | 58.0 | | 8 | 7 | 6 | 7 | 33.6 | 92 | 104 | 116 | | 5 | 8.5 | 0 |
| 38 FT | 24 | 25 | 9 | 8 | 6.5 | 6 | 6.5 | 39.8 | 48.8 | 53.8 | 58.8 | | 8 | 7 | 6 | 7 | 33.6 | 93 | 105 | 117 | | 5 | 8.5 | 0 |
| 40 FT | 24 | 26 | 10 | 8 | 6 | 6 | 7 | 40.0 | 44.5 | 49.0 | 53.6 | | 8 | 7 | 5 | 6 | 30.8 | 94 | 106 | 118 | | 5 | 8 | 0 |
| 42 FT | 25 | 27 | 10 | 8 | 6 | 6 | 7 | 40.0 | 45.3 | 49.8 | 54.4 | | 8 | 7 | 6 | 7 | 33.9 | 95 | 107 | 119 | | 5 | 8 | 0 |
| 44 FT | 26 | 27 | 10 | 8 | 6 | 6 | 7 | 40.0 | 50.4 | 55.5 | 60.5 | | 8 | 6.5 | 6 | 7 | 33.9 | 95 | 107 | 119 | | 5 | 8 | 0 |
| 46 FT | 27 | 28 | 10 | 8 | 6 | 6 | 7 | 40.0 | 51.3 | 56.3 | 61.4 | | 8 | 6.5 | 6 | 7 | 33.9 | 96 | 108 | 120 | | 5 | 7.5 | 0 |
| 48 FT | 28 | 29 | 11 | 8 | 6 | 6 | 7.5 | 40.3 | 52.1 | 57.1 | 62.1 | | 8 | 6.5 | 6 | 7.5 | 34.1 | 97 | 109 | 121 | | 5 | 7.5 | 0 |
| 50 FT | 28 | 30 | 11 | 8 | 6 | 6 | 7.5 | 40.3 | 52.5 | 57.5 | 62.6 | | 8 | 6.5 | 6 | 7 | 34.1 | 98 | 110 | 122 | | 5 | 7.5 | 0 |

## SPAN (S) = 12 FT  HEIGHT (HT) = 9 FT OR 10 FT OR 11 FT

| DESIGN FILL | MEMBER THICKNESS | | | TOP SLAB BARS | | | | | | | | | BOTTOM SLAB BARS | | | | | | | | | WALL BARS | | |
|---|---|---|---|---|---|---|---|---|---|---|---|---|---|---|---|---|---|---|---|---|---|---|---|---|
| | | | | A1 BARS | | J3 BARS | | | | | | | A2 BARS | | J4 BARS | | | | | | | B2 BARS | | |
| | | | | | | | | | K2 | | | | | | | | | K3 | | | | | | |
| | TS | BS | TX | SIZE | SPA. | SIZE | SPA. | C1 | HT=9' | HT=10' | HT=11' | | SIZE | SPA. | SIZE | SPA. | C4 | HT=9' | HT=10' | HT=11' | | SIZE | SPA. | G1 |
| 1 FT | 11 | 12 | 8 | 6 | 6.5 | 6 | 7 | 91.3 | 31.5 | 34.5 | 37.5 | | 6 | 7.5 | 6 | 7 | 91.3 | 116 | 128 | 140 | | 5 | 10 | 12 |
| 2 FT | 11 | 12 | 8 | 6 | 6 | 6 | 6.5 | 91.3 | 31.5 | 34.5 | 37.5 | | 6 | 7 | 6 | 6.5 | 91.3 | 116 | 128 | 140 | | 5 | 9.5 | 12 |
| 4 FT | 10 | 12 | 8 | 6 | 6 | 6 | 6 | 69.9 | 30.0 | 32.9 | 35.8 | | 6 | 6.5 | 6 | 6.5 | 83.6 | 116 | 128 | 140 | | 5 | 9.5 | 0 |
| 6 FT | 10 | 12 | 8 | 6 | 6.5 | 6 | 6 | 57.8 | 31.3 | 34.3 | 37.3 | | 6 | 6 | 6 | 6 | 62.4 | 116 | 128 | 140 | | 5 | 9.5 | 0 |
| 8 FT | 10 | 12 | 9 | 6 | 6 | 6 | 6 | 52.0 | 31.3 | 34.3 | 37.3 | | 7 | 8 | 6 | 6 | 55.1 | 116 | 128 | 140 | | 5 | 10 | 0 |
| 10 FT | 10 | 12 | 9 | 7 | 7.5 | 7 | 6 | 52.0 | 35.0 | 38.4 | 41.8 | | 7 | 7 | 6 | 6 | 50.5 | 116 | 128 | 140 | | 5 | 9.5 | 0 |
| 12 FT | 11 | 13 | 10 | 7 | 7.5 | 6 | 6 | 49.3 | 33.0 | 36.1 | 39.3 | | 7 | 7 | 6 | 6.5 | 49.3 | 117 | 129 | 141 | | 5 | 10 | 0 |
| 14 FT | 11 | 13 | 10 | 7 | 7.5 | 6 | 6 | 46.3 | 31.8 | 34.8 | 37.8 | | 7 | 7 | 6 | 6.5 | 46.3 | 117 | 129 | 141 | | 5 | 12 | 0 |
| 16 FT | 12 | 14 | 10 | 7 | 7 | 6 | 6.5 | 46.3 | 32.3 | 35.3 | 38.3 | | 7 | 6.5 | 6 | 7 | 44.6 | 118 | 130 | 142 | | 5 | 11 | 0 |
| 18 FT | 13 | 15 | 10 | 7 | 6.5 | 6 | 6 | 44.6 | 38.0 | 41.5 | 45.0 | | 7 | 6 | 6 | 7 | 44.6 | 119 | 131 | 143 | | 5 | 9.5 | 0 |
| 20 FT | 14 | 16 | 10 | 7 | 6 | 7 | 7.5 | 47.8 | 38.6 | 42.0 | 45.5 | | 7 | 6 | 6 | 6.5 | 44.6 | 120 | 132 | 144 | | 5 | 8.5 | 0 |
| 22 FT | 16 | 18 | 11 | 7 | 6.5 | 6 | 6.5 | 51.1 | 37.0 | 40.3 | 43.5 | | 7 | 6.5 | 6 | 7.5 | 45.0 | 122 | 134 | 146 | | 5 | 8.5 | 0 |
| 24 FT | 17 | 19 | 11 | 7 | 6 | 6 | 6 | 49.6 | 37.5 | 40.8 | 44.0 | | 7 | 6 | 6 | 7.5 | 45.0 | 123 | 135 | 147 | | 5 | 7.5 | 0 |
| 26 FT | 18 | 20 | 12 | 7 | 6 | 6 | 6.5 | 49.9 | 38.1 | 41.3 | 44.5 | | 7 | 6 | 6 | 7.5 | 45.3 | 124 | 136 | 148 | | 5 | 8 | 0 |
| 28 FT | 19 | 21 | 12 | 7 | 6 | 6 | 6 | 49.9 | 40.0 | 43.4 | 46.8 | | 7 | 6 | 6 | 7.5 | 45.3 | 125 | 137 | 149 | | 5 | 7 | 0 |
| 30 FT | 20 | 22 | 13 | 8 | 7.5 | 6 | 6.5 | 51.8 | 40.6 | 44.0 | 47.4 | | 7 | 6 | 6 | 8 | 45.5 | 126 | 138 | 150 | | 5 | 7.5 | 0 |
| 32 FT | 21 | 23 | 13 | 8 | 7.5 | 6 | 6 | 50.3 | 41.1 | 44.5 | 47.9 | | 8 | 7.5 | 6 | 7.5 | 45.5 | 127 | 139 | 151 | | 5 | 7 | 0 |
| 34 FT | 21 | 23 | 13 | 8 | 7 | 6 | 6 | 50.3 | 45.6 | 49.3 | 53.0 | | 8 | 7 | 6 | 7 | 45.5 | 127 | 139 | 151 | | 5 | 6.5 | 0 |
| 36 FT | 22 | 24 | 14 | 8 | 7 | 6 | 6 | 52.1 | 43.3 | 46.8 | 50.1 | | 8 | 7 | 6 | 7.5 | 45.9 | 128 | 140 | 152 | | 5 | 7 | 0 |
| 38 FT | 23 | 25 | 14 | 8 | 6.5 | 6 | 6 | 50.5 | 43.8 | 47.3 | 50.8 | | 8 | 7 | 6 | 7.5 | 45.9 | 129 | 141 | 153 | | 5 | 6 | 0 |
| 40 FT | 24 | 26 | 14 | 8 | 6.5 | 6 | 6 | 50.5 | 44.4 | 47.9 | 51.4 | | 8 | 7 | 6 | 7 | 45.9 | 130 | 142 | 154 | | 5 | 6 | 0 |
| 42 FT | 25 | 27 | 15 | 8 | 6.5 | 6 | 6 | 52.5 | 49.6 | 53.5 | 57.3 | | 8 | 7 | 6 | 7.5 | 46.1 | 131 | 143 | 155 | | 5 | 6 | 0 |
| 44 FT | 26 | 28 | 15 | 8 | 6.5 | 6 | 6 | 52.5 | 50.3 | 54.1 | 57.9 | | 8 | 6.5 | 6 | 7.5 | 47.8 | 132 | 144 | 156 | | 6 | 8 | 0 |
| 46 FT | 27 | 28 | 15 | 8 | 6.5 | 6 | 6 | 50.9 | 52.1 | 56.1 | 60.0 | | 8 | 6.5 | 6 | 7 | 47.8 | 132 | 144 | 156 | | 6 | 8 | 0 |
| 48 FT | 27 | 29 | 15 | 8 | 6 | 6 | 6 | 52.5 | 52.5 | 56.4 | 60.4 | | 8 | 6.5 | 6 | 7 | 47.8 | 133 | 145 | 157 | | 6 | 8 | 0 |
| 50 FT | 28 | 30 | 16 | 8 | 6 | 6 | 6 | 52.8 | 53.1 | 57.1 | 61.0 | | 8 | 6.5 | 6 | 7.5 | 48.0 | 134 | 146 | 158 | | 6 | 8 | 0 |

## SPAN (S) = 12 FT  HEIGHT (HT) = 12 FT OR 13 FT

| DESIGN FILL | MEMBER THICKNESS | | | TOP SLAB BARS | | | | | | | | | BOTTOM SLAB BARS | | | | | | | | | WALL BARS | | |
|---|---|---|---|---|---|---|---|---|---|---|---|---|---|---|---|---|---|---|---|---|---|---|---|---|
| | | | | A1 BARS | | J3 BARS | | | | | | | A2 BARS | | J4 BARS | | | | | | | B2 BARS | | |
| | | | | | | | | | K2 | | | | | | | | | K3 | | | | | | |
| | TS | BS | TX | SIZE | SPA. | SIZE | SPA. | C1 | HT=12' | HT=13' | | | SIZE | SPA. | SIZE | SPA. | C4 | HT=12' | HT=13' | | | SIZE | SPA. | G1 |
| 1 FT | 12 | 11 | 9 | 6 | 6.5 | 5 | 6 | 90.3 | 32.4 | 34.8 | | | 6 | 6.5 | 6 | 6 | 91.8 | 151 | 163 | | | 5 | 8.5 | 12 |
| 2 FT | 12 | 11 | 9 | 6 | 6.5 | 6 | 7 | 91.8 | 34.0 | 36.5 | | | 6 | 6.5 | 6 | 6 | 91.8 | 151 | 163 | | | 5 | 8.5 | 12 |
| 4 FT | 10 | 12 | 9 | 6 | 6.5 | 6 | 6 | 91.8 | 35.4 | 38.0 | | | 6 | 6.5 | 6 | 6 | 91.8 | 152 | 164 | | | 5 | 8.5 | 0 |
| 6 FT | 10 | 12 | 9 | 6 | 6.5 | 7 | 6.5 | 81.1 | 35.4 | 38.0 | | | 6 | 6 | 6 | 6 | 91.8 | 152 | 164 | | | 5 | 8 | 0 |
| 8 FT | 10 | 12 | 10 | 6 | 6.5 | 6 | 6 | 64.6 | 35.4 | 38.0 | | | 7 | 7.5 | 6 | 6 | 73.9 | 152 | 164 | | | 5 | 8 | 0 |
| 10 FT | 11 | 13 | 10 | 6 | 6 | 6 | 6 | 61.6 | 35.9 | 38.5 | | | 7 | 7.5 | 6 | 6 | 69.3 | 153 | 165 | | | 5 | 8 | 0 |
| 12 FT | 12 | 13 | 11 | 6 | 6 | 6 | 7 | 58.9 | 36.1 | 38.8 | | | 7 | 7 | 6 | 6 | 62.0 | 153 | 165 | | | 5 | 7.5 | 0 |
| 14 FT | 12 | 13 | 11 | 6 | 6 | 6 | 7 | 54.3 | 36.1 | 38.8 | | | 7 | 7 | 6 | 6 | 55.8 | 153 | 165 | | | 5 | 7.5 | 0 |
| 16 FT | 12 | 14 | 11 | 7 | 7 | 6 | 6 | 52.8 | 36.3 | 39.0 | | | 7 | 6.5 | 6 | 6.5 | 55.8 | 154 | 166 | | | 5 | 7.5 | 0 |
| 18 FT | 13 | 16 | 12 | 7 | 7 | 6 | 6 | 53.0 | 38.6 | 41.4 | | | 7 | 6.5 | 6 | 7 | 56.1 | 156 | 168 | | | 5 | 7 | 0 |
| 20 FT | 14 | 16 | 12 | 7 | 6.5 | 6 | 6 | 53.0 | 38.9 | 41.6 | | | 7 | 6 | 6 | 6 | 54.6 | 156 | 168 | | | 5 | 7 | 0 |
| 22 FT | 16 | 18 | 13 | 7 | 6.5 | 6 | 6 | 59.6 | 41.5 | 44.4 | | | 7 | 6.5 | 6 | 7 | 55.0 | 158 | 170 | | | 5 | 6.5 | 0 |
| 24 FT | 16 | 19 | 13 | 7 | 6 | 7 | 7 | 64.4 | 40.0 | 42.8 | | | 7 | 6 | 6 | 6.5 | 55.0 | 159 | 171 | | | 5 | 6.5 | 0 |
| 26 FT | 18 | 20 | 14 | 7 | 6.5 | 6 | 6 | 58.5 | 42.5 | 45.4 | | | 7 | 6 | 6 | 6.5 | 55.3 | 160 | 172 | | | 5 | 6 | 0 |
| 28 FT | 18 | 21 | 14 | 7 | 6 | 7 | 7 | 63.3 | 42.8 | 45.6 | | | 7 | 6 | 6 | 6.5 | 55.3 | 161 | 173 | | | 5 | 6 | 0 |
| 30 FT | 19 | 22 | 14 | 8 | 7.5 | 7 | 6.5 | 63.3 | 43.3 | 46.1 | | | 7 | 6 | 6 | 6 | 55.3 | 162 | 174 | | | 5 | 6 | 0 |
| 32 FT | 20 | 23 | 15 | 8 | 7.5 | 7 | 7.5 | 63.6 | 45.5 | 48.5 | | | 8 | 7.5 | 6 | 6.5 | 55.6 | 163 | 175 | | | 6 | 8 | 0 |
| 34 FT | 21 | 23 | 15 | 8 | 7 | 7 | 7 | 63.6 | 45.8 | 48.8 | | | 8 | 7 | 6 | 6 | 55.6 | 163 | 175 | | | 6 | 8 | 0 |
| 36 FT | 22 | 24 | 16 | 8 | 7 | 7 | 7.5 | 64.0 | 46.3 | 49.3 | | | 8 | 7 | 6 | 6.5 | 56.0 | 164 | 176 | | | 6 | 8 | 0 |
| 38 FT | 23 | 25 | 16 | 8 | 7 | 7 | 7 | 64.0 | 48.6 | 51.8 | | | 8 | 7 | 6 | 6 | 56.0 | 165 | 177 | | | 6 | 8 | 0 |
| 40 FT | 24 | 26 | 17 | 8 | 7 | 7 | 7.5 | 64.4 | 49.1 | 52.3 | | | 8 | 7 | 6 | 6.5 | 56.4 | 166 | 178 | | | 6 | 7.5 | 0 |
| 42 FT | 24 | 27 | 17 | 8 | 6.5 | 7 | 6.5 | 64.4 | 49.4 | 52.5 | | | 8 | 7 | 6 | 6 | 56.4 | 167 | 179 | | | 6 | 7.5 | 0 |
| 44 FT | 25 | 28 | 18 | 8 | 6.5 | 7 | 7 | 66.4 | 49.9 | 53.0 | | | 8 | 7 | 6 | 6.5 | 56.8 | 168 | 180 | | | 6 | 7 | 0 |
| 46 FT | 26 | 28 | 18 | 8 | 6.5 | 7 | 7 | 66.4 | 50.1 | 53.3 | | | 8 | 6.5 | 6 | 6 | 56.8 | 168 | 180 | | | 6 | 7 | 0 |
| 48 FT | 27 | 29 | 19 | 8 | 6.5 | 7 | 7.5 | 66.9 | 52.6 | 55.9 | | | 8 | 6.5 | 6 | 6.5 | 57.0 | 169 | 181 | | | 6 | 6.5 | 0 |
| 50 FT | 28 | 30 | 19 | 8 | 6.5 | 7 | 7 | 66.9 | 53.3 | 56.4 | | | 8 | 6.5 | 6 | 6 | 57.0 | 170 | 182 | | | 6 | 6.5 | 0 |

## SPAN (S) = 12 FT  HEIGHT (HT) = 14 FT OR 15 FT

| DESIGN FILL | MEMBER THICKNESS | | | TOP SLAB BARS | | | | | | | | | BOTTOM SLAB BARS | | | | | | | | | WALL BARS | | |
|---|---|---|---|---|---|---|---|---|---|---|---|---|---|---|---|---|---|---|---|---|---|---|---|---|
| | | | | A1 BARS | | J3 BARS | | | | | | | A2 BARS | | J4 BARS | | | | | | | B2 BARS | | |
| | | | | | | | | | K2 | | | | | | | | | K3 | | | | | | |
| | TS | BS | TX | SIZE | SPA. | SIZE | SPA. | C1 | HT=14' | HT=15' | | | SIZE | SPA. | SIZE | SPA. | C4 | HT=14' | HT=15' | | | SIZE | SPA. | G1 |
| 1 FT | 12 | 12 | 10 | 6 | 7 | 6 | 7.5 | 94.0 | 35.5 | 37.8 | | | 6 | 7 | 6 | 6.5 | 94.0 | 176 | 188 | | | 5 | 7.5 | 12 |
| 2 FT | 12 | 12 | 10 | 6 | 6.5 | 6 | 7 | 94.0 | 37.4 | 39.8 | | | 6 | 6.5 | 6 | 6 | 94.0 | 176 | 188 | | | 5 | 7.5 | 12 |
| 4 FT | 10 | 13 | 10 | 6 | 6.5 | 6 | 6 | 94.0 | 35.4 | 37.6 | | | 6 | 6.5 | 6 | 6 | 94.0 | 177 | 189 | | | 5 | 6.5 | 0 |
| 6 FT | 10 | 13 | 11 | 6 | 7 | 6 | 6.5 | 94.5 | 35.4 | 37.6 | | | 6 | 6.5 | 6 | 6.5 | 94.5 | 177 | 189 | | | 5 | 6.5 | 0 |
| 8 FT | 10 | 13 | 11 | 6 | 6.5 | 6 | 6 | 85.3 | 35.4 | 37.6 | | | 6 | 6 | 6 | 6 | 94.5 | 177 | 189 | | | 5 | 6 | 0 |
| 10 FT | 11 | 13 | 12 | 6 | 6.5 | 6 | 6.5 | 74.9 | 35.5 | 37.8 | | | 7 | 7.5 | 6 | 6 | 95.1 | 177 | 189 | | | 5 | 6 | 0 |
| 12 FT | 12 | 14 | 13 | 6 | 6.5 | 6 | 7 | 70.6 | 37.8 | 40.3 | | | 7 | 7.5 | 6 | 6.5 | 83.3 | 178 | 190 | | | 5 | 6 | 0 |
| 14 FT | 12 | 14 | 13 | 6 | 6.5 | 6 | 7 | 62.8 | 37.8 | 40.3 | | | 7 | 7.5 | 6 | 6.5 | 69.1 | 178 | 190 | | | 5 | 6.5 | 0 |
| 16 FT | 13 | 15 | 13 | 6 | 6 | 6 | 6.5 | 64.4 | 38.3 | 40.6 | | | 7 | 7 | 6 | 6.5 | 70.6 | 179 | 191 | | | 5 | 6.5 | 0 |
| 18 FT | 14 | 16 | 14 | 7 | 7.5 | 6 | 6.5 | 63.3 | 38.6 | 41.0 | | | 7 | 7 | 6 | 6.5 | 68.0 | 180 | 192 | | | 5 | 6 | 0 |
| 20 FT | 15 | 17 | 14 | 7 | 7 | 6 | 6 | 69.5 | 39.0 | 41.4 | | | 7 | 6.5 | 6 | 6 | 68.0 | 181 | 193 | | | 5 | 6 | 0 |
| 22 FT | 16 | 18 | 15 | 7 | 7 | 6 | 6 | 70.0 | 41.4 | 43.9 | | | 7 | 6.5 | 6 | 6.5 | 68.4 | 182 | 194 | | | 6 | 8 | 0 |
| 24 FT | 16 | 19 | 15 | 7 | 6.5 | 7 | 7 | 73.1 | 41.6 | 44.1 | | | 7 | 6 | 6 | 6 | 68.4 | 183 | 195 | | | 6 | 8 | 0 |
| 26 FT | 17 | 20 | 16 | 7 | 6.5 | 7 | 7 | 73.6 | 42.0 | 44.5 | | | 7 | 6 | 6 | 6 | 67.3 | 184 | 196 | | | 6 | 8 | 0 |
| 28 FT | 18 | 21 | 16 | 7 | 6 | 7 | 7 | 75.3 | 46.5 | 49.3 | | | 7 | 6 | 7 | 7.5 | 72.0 | 185 | 197 | | | 6 | 8 | 0 |
| 30 FT | 19 | 22 | 17 | 7 | 6 | 7 | 7 | 74.0 | 46.9 | 49.6 | | | 7 | 6 | 7 | 7.5 | 70.9 | 186 | 198 | | | 6 | 7.5 | 0 |
| 32 FT | 20 | 23 | 17 | 7 | 6 | 7 | 6.5 | 75.6 | 47.4 | 50.1 | | | 7 | 6 | 7 | 7 | 70.9 | 187 | 199 | | | 6 | 7.5 | 0 |
| 34 FT | 21 | 23 | 18 | 8 | 7.5 | 7 | 7 | 74.5 | 51.8 | 54.8 | | | 8 | 7.5 | 7 | 6.5 | 71.3 | 187 | 199 | | | 6 | 7 | 0 |
| 36 FT | 22 | 24 | 19 | 8 | 7.5 | 7 | 7.5 | 75.0 | 52.3 | 55.3 | | | 8 | 7.5 | 7 | 7 | 70.1 | 188 | 200 | | | 6 | 6.5 | 0 |
| 38 FT | 23 | 25 | 19 | 8 | 7.5 | 7 | 6.5 | 76.6 | 50.6 | 53.5 | | | 8 | 7 | 7 | 7 | 71.8 | 189 | 201 | | | 6 | 6.5 | 0 |
| 40 FT | 24 | 26 | 20 | 8 | 7 | 7 | 7 | 75.5 | 51.1 | 54.0 | | | 8 | 7 | 7 | 7.5 | 70.5 | 190 | 202 | | | 6 | 6.5 | 0 |
| 42 FT | 25 | 27 | 20 | 8 | 7 | 7 | 6.5 | 77.1 | 53.8 | 56.8 | | | 8 | 7 | 7 | 7 | 72.1 | 191 | 203 | | | 6 | 6.5 | 0 |
| 44 FT | 25 | 28 | 21 | 8 | 7 | 7 | 6.5 | 75.9 | 54.0 | 57.0 | | | 8 | 7 | 7 | 7.5 | 72.6 | 192 | 204 | | | 6 | 6 | 0 |
| 46 FT | 26 | 28 | 22 | 8 | 6.5 | 7 | 7 | 76.4 | 56.4 | 59.5 | | | 8 | 6.5 | 7 | 7 | 71.4 | 192 | 204 | | | 6 | 6 | 0 |
| 48 FT | 27 | 29 | 22 | 8 | 6.5 | 7 | 6.5 | 76.4 | 59.1 | 62.4 | | | 8 | 6.5 | 7 | 7 | 71.4 | 193 | 205 | | | 6 | 6 | 0 |
| 50 FT | 27 | 30 | 23 | 8 | 6.5 | 7 | 6.5 | 76.9 | 57.3 | 60.4 | | | 8 | 6.5 | 7 | 7 | 71.8 | 194 | 206 | | | 7 | 7.5 | 0 |

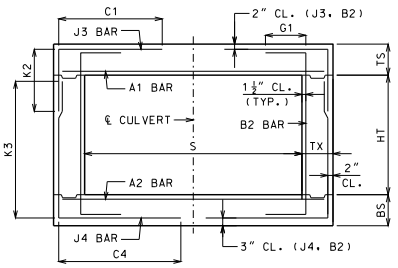


BAR DIMENSIONS DIAGRAM
SYMMETRICAL ABOUT ℄ CULVERT.

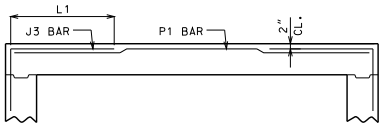


ALTERNATE J3 BAR

AT CONTRACTOR'S OPTION, ALTERNATE J3 BARS MAY BE USED WHEN THE DISTANCE BETWEEN THE ENDS OF J3 BARS IN THE TOP SLAB IS LESS THAN 2'-0". DIMENSION L1 (NOT C1) SHALL BE USED WITH ALTERNATE J3 BARS. WHERE L1 IS EQUAL TO 18", 22" AND 28" FOR #4, #5 AND #6 BARS, RESPECTIVELY. ADDITIONAL P1 BARS ARE REQUIRED WITH ALTERNATE J3 BARS WITH A LENGTH EQUAL TO A1 BARS, AND SIZE AND SPACING EQUAL TO J3 BARS. NO ADDITIONAL PAYMENT WILL BE MADE FOR THIS SUBSTITUTION.

GENERAL NOTES:

IF DESIGN FILL IS BETWEEN TABULATED DESIGN FILLS, USE THE NEXT GREATER TABULATED DESIGN FILL, EXCEPT FOR DESIGN FILLS BETWEEN 2 FEET AND 4 FEET. FOR DESIGN FILLS BETWEEN 2 FEET AND 4 FEET USE THE GREATER MEMBER THICKNESS, AREA OF REINFORCEMENT AND BAR DIMENSIONS FROM THE 2 FEET AND 4 FEET TABULATED DESIGN FILLS, AREA OF REINFORCEMENT EQUALS BAR AREA PER FOOT SPACING.

SPECIAL DESIGNS ARE REQUIRED WHEN THE DESIGN FILL IS LESS THAN 1 FOOT OR GREATER THAN 50 FEET.

DIMENSIONS ARE IN INCHES UNLESS OTHERWISE SPECIFIED.

DESIGN FILLS ARE MEASURED FROM THE TOP OF TOP SLAB TO THE TOP OF EARTH FILL OR ROADWAY.

CULVERTS MEET STRENGTH AND SERVICEABILITY REQUIREMENTS FOR THE DESIGN VEHICULAR LIVE LOAD HL-93 MINUS THE LANE LOAD.


MISSOURI HIGHWAYS AND TRANSPORTATION COMMISSION
105 WEST CAPITOL
JEFFERSON CITY, MO 65102
1-888-ASK-MODOT (1-888-275-6636)


STATE OF MISSOURI — DENNIS W. HECKMAN — NUMBER PE-27141 — PROFESSIONAL ENGINEER — THIS SHEET HAS BEEN SIGNED, SEALED AND DATED ELECTRONICALLY.

# CONCRETE SINGLE BOX CULVERT

MEMBER THICKNESS
BAR SIZE, SPACING & DIMENSIONS

SPAN (S): 12 FEET
HEIGHT (HT): 6 THRU 15 FEET

DATE EFFECTIVE: 04/01/2011
DATE PREPARED: 4/18/2011

703.17

SHEET NO.
10 OF 14

IF A SEAL IS PRESENT ON THIS SHEET IT HAS BEEN ELECTRONICALLY SEALED AND DATED.

## SPAN (S) = 13 FT  HEIGHT (HT) = 7 FT OR 8 FT OR 9 FT

| DESIGN FILL | MEMBER THICKNESS | | | TOP SLAB BARS | | | | | | | | BOTTOM SLAB BARS | | | | | | | | WALL BARS | | |
|---|---|---|---|---|---|---|---|---|---|---|---|---|---|---|---|---|---|---|---|---|---|---|
| | | | | A1 BARS | | J3 BARS | | | K2 | | | A2 BARS | | J4 BARS | | | K3 | | | B2 BARS | | |
| | TS | BS | TX | SIZE | SPA. | SIZE | SPA. | C1 | HT=7' | HT=8' | HT=9' | SIZE | SPA. | SIZE | SPA. | C4 | HT=7' | HT=8' | HT=9' | SIZE | SPA. | G1 |
| 1 FT | 13 | 11 | 8 | 6 | 6.5 | 5 | 8.5 | 95.1 | 34.0 | 38.0 | 41.9 | 6 | 7 | 6 | 7 | 67.3 | 91 | 103 | 115 | 5 | 12 | 12 |
| 2 FT | 13 | 11 | 8 | 6 | 6 | 5 | 6.5 | 95.1 | 34.0 | 38.0 | 41.9 | 6 | 6.5 | 6 | 6.5 | 59.0 | 91 | 103 | 115 | 5 | 12 | 12 |
| 4 FT | 10 | 11 | 8 | 7 | 7.5 | 6 | 6 | 49.3 | 31.0 | 34.8 | 38.5 | 6 | 6 | 6 | 6.5 | 49.3 | 91 | 103 | 115 | 5 | 12 | 0 |
| 6 FT | 10 | 11 | 8 | 7 | 7.5 | 6 | 6 | 45.9 | 34.0 | 38.1 | 42.1 | 7 | 7 | 6 | 6 | 45.9 | 91 | 103 | 115 | 5 | 12 | 0 |
| 8 FT | 10 | 12 | 8 | 7 | 7 | 7 | 6 | 47.5 | 30.3 | 33.9 | 37.5 | 7 | 7 | 6 | 7 | 42.6 | 92 | 104 | 116 | 5 | 12 | 0 |
| 10 FT | 11 | 12 | 8 | 7 | 6.5 | 7 | 6.5 | 44.3 | 35.8 | 39.9 | 44.1 | 7 | 6 | 6 | 6 | 41.0 | 92 | 104 | 116 | 5 | 12 | 0 |
| 12 FT | 12 | 13 | 8 | 7 | 6 | 7 | 6.5 | 42.6 | 36.4 | 40.6 | 44.8 | 7 | 6 | 6 | 6.5 | 39.4 | 93 | 105 | 117 | 5 | 12 | 0 |
| 14 FT | 12 | 14 | 8 | 7 | 6 | 7 | 6.5 | 41.0 | 32.5 | 36.3 | 40.0 | 7 | 6 | 5 | 6 | 32.8 | 94 | 106 | 118 | 5 | 12 | 0 |
| 16 FT | 13 | 15 | 8 | 8 | 7.5 | 7 | 6.5 | 39.4 | 33.1 | 36.9 | 40.6 | 7 | 6 | 5 | 6 | 31.1 | 95 | 107 | 119 | 5 | 12 | 0 |
| 18 FT | 14 | 16 | 8 | 8 | 7 | 7 | 7 | 37.8 | 34.9 | 38.8 | 42.5 | 8 | 7.5 | 6 | 8 | 34.5 | 96 | 108 | 120 | 5 | 12 | 0 |
| 20 FT | 15 | 18 | 8 | 8 | 6.5 | 7 | 7 | 45.9 | 35.9 | 39.6 | 43.5 | 8 | 7.5 | 5 | 6 | 31.1 | 98 | 110 | 122 | 5 | 11.5 | 0 |
| 22 FT | 17 | 19 | 8 | 8 | 7 | 6 | 6 | 41.0 | 38.0 | 41.9 | 45.9 | 8 | 7.5 | 6 | 8 | 34.5 | 99 | 111 | 123 | 5 | 9.5 | 0 |
| 24 FT | 18 | 20 | 8 | 8 | 6.5 | 7 | 7.5 | 45.9 | 38.6 | 42.6 | 46.5 | 8 | 7 | 6 | 7.5 | 34.5 | 100 | 112 | 124 | 5 | 9.5 | 0 |
| 26 FT | 19 | 21 | 9 | 8 | 6.5 | 6 | 6 | 41.3 | 39.3 | 43.3 | 47.3 | 8 | 7 | 5 | 6 | 31.4 | 101 | 113 | 125 | 5 | 9 | 0 |
| 28 FT | 20 | 22 | 10 | 8 | 6.5 | 6 | 6.5 | 41.5 | 41.1 | 45.3 | 49.3 | 8 | 7 | 5 | 6 | 33.3 | 102 | 114 | 126 | 5 | 10 | 0 |
| 30 FT | 21 | 23 | 10 | 8 | 6.5 | 6 | 6.5 | 41.5 | 41.9 | 45.9 | 50.0 | 8 | 6.5 | 5 | 6 | 33.3 | 103 | 115 | 127 | 5 | 9 | 0 |
| 32 FT | 22 | 24 | 10 | 8 | 6 | 6 | 6 | 41.5 | 42.5 | 46.6 | 50.6 | 8 | 6.5 | 5 | 6 | 33.3 | 104 | 116 | 128 | 5 | 8 | 0 |
| 34 FT | 23 | 25 | 11 | 8 | 6 | 6 | 6.5 | 41.8 | 43.1 | 47.3 | 51.4 | 8 | 6.5 | 5 | 6.5 | 33.4 | 105 | 117 | 129 | 5 | 8.5 | 0 |
| 36 FT | 24 | 26 | 11 | 8 | 6 | 6 | 6.5 | 41.8 | 45.1 | 49.4 | 53.5 | 8 | 6.5 | 5 | 6 | 33.4 | 106 | 118 | 130 | 5 | 8 | 0 |
| 38 FT | 25 | 27 | 12 | 8 | 6 | 6 | 6.5 | 42.0 | 45.9 | 50.0 | 54.3 | 8 | 6.5 | 5 | 6 | 33.6 | 107 | 119 | 131 | 5 | 8.5 | 0 |
| 40 FT | 26 | 28 | 12 | 8 | 6 | 6 | 7 | 42.0 | 46.5 | 50.8 | 55.0 | 8 | 6.5 | 5 | 6 | 33.6 | 108 | 120 | 132 | 5 | 7.5 | 0 |
| 42 FT | 27 | 29 | 12 | 9 | 7.5 | 6 | 7 | 42.0 | 51.3 | 55.9 | 60.4 | 8 | 6 | 6 | 8.5 | 37.0 | 109 | 121 | 133 | 5 | 7 | 0 |
| 44 FT | 28 | 30 | 12 | 9 | 7 | 6 | 7 | 42.0 | 52.0 | 56.6 | 61.1 | 8 | 6 | 6 | 8 | 37.0 | 110 | 122 | 134 | 5 | 7 | 0 |
| 46 FT | 29 | 30 | 12 | 9 | 7 | 6 | 7 | 42.0 | 53.9 | 58.5 | 63.1 | 8 | 6 | 6 | 7.5 | 37.0 | 110 | 122 | 134 | 5 | 7 | 0 |
| 48 FT | 30 | 31 | 12 | 9 | 7 | 6 | 7 | 42.0 | 54.6 | 59.3 | 64.0 | 8 | 6 | 6 | 7.5 | 37.0 | 111 | 123 | 135 | 5 | 7 | 0 |
| 50 FT | 30 | 32 | 12 | 9 | 7 | 6 | 6.5 | 42.0 | 55.0 | 59.6 | 64.4 | 8 | 6 | 6 | 7.5 | 37.0 | 112 | 124 | 136 | 5 | 7 | 0 |

## SPAN (S) = 13 FT  HEIGHT (HT) = 10 FT OR 11 FT OR 12 FT

| DESIGN FILL | MEMBER THICKNESS | | | TOP SLAB BARS | | | | | | | | BOTTOM SLAB BARS | | | | | | | | WALL BARS | | |
|---|---|---|---|---|---|---|---|---|---|---|---|---|---|---|---|---|---|---|---|---|---|---|
| | | | | A1 BARS | | J3 BARS | | | K2 | | | A2 BARS | | J4 BARS | | | K3 | | | B2 BARS | | |
| | TS | BS | TX | SIZE | SPA. | SIZE | SPA. | C1 | HT=10' | HT=11' | HT=12' | SIZE | SPA. | SIZE | SPA. | C4 | HT=10 | HT=11 | HT=12 | SIZE | SPA. | G1 |
| 1 FT | 12 | 12 | 9 | 6 | 6.5 | 5 | 6 | 95.8 | 33.4 | 36.3 | 39.1 | 6 | 7 | 6 | 6.5 | 99.0 | 128 | 140 | 152 | 5 | 9 | 12 |
| 2 FT | 12 | 13 | 9 | 6 | 6 | 6 | 7 | 99.0 | 32.3 | 35.0 | 37.8 | 6 | 6.5 | 6 | 7 | 99.0 | 129 | 141 | 153 | 5 | 9 | 12 |
| 4 FT | 10 | 11 | 9 | 7 | 7.5 | 6 | 6 | 72.6 | 34.0 | 37.0 | 40.0 | 7 | 7.5 | 6 | 6 | 77.5 | 127 | 139 | 151 | 5 | 8.5 | 0 |
| 6 FT | 10 | 11 | 10 | 6 | 6 | 6 | 6 | 61.4 | 34.0 | 37.0 | 40.0 | 7 | 7.5 | 6 | 6 | 63.1 | 127 | 139 | 151 | 5 | 9 | 0 |
| 8 FT | 10 | 12 | 10 | 7 | 7.5 | 7 | 6 | 59.8 | 34.3 | 37.3 | 40.3 | 7 | 7 | 6 | 6.5 | 59.8 | 128 | 140 | 152 | 5 | 9 | 0 |
| 10 FT | 11 | 13 | 10 | 7 | 7 | 6 | 6 | 54.8 | 36.1 | 39.3 | 42.4 | 7 | 6.5 | 6 | 6.5 | 56.5 | 129 | 141 | 153 | 5 | 8.5 | 0 |
| 12 FT | 12 | 14 | 10 | 7 | 6.5 | 6 | 6 | 51.5 | 33.9 | 36.8 | 39.6 | 7 | 6.5 | 6 | 6 | 53.1 | 130 | 142 | 154 | 5 | 8 | 0 |
| 14 FT | 12 | 14 | 10 | 7 | 6.5 | 6 | 6 | 48.1 | 33.9 | 36.8 | 39.6 | 7 | 6 | 6 | 6 | 48.1 | 130 | 142 | 154 | 5 | 9.5 | 0 |
| 16 FT | 13 | 15 | 10 | 7 | 6 | 7 | 7 | 51.5 | 34.4 | 37.3 | 40.1 | 7 | 6 | 6 | 6 | 48.1 | 131 | 143 | 155 | 5 | 8 | 0 |
| 18 FT | 14 | 16 | 11 | 7 | 6 | 7 | 7.5 | 51.8 | 39.1 | 42.4 | 45.6 | 8 | 7.5 | 6 | 6.5 | 48.4 | 132 | 144 | 156 | 5 | 8.5 | 0 |
| 20 FT | 15 | 18 | 11 | 8 | 7.5 | 7 | 7 | 58.5 | 37.0 | 40.0 | 43.0 | 8 | 7.5 | 6 | 7 | 46.8 | 134 | 146 | 158 | 5 | 7.5 | 0 |
| 22 FT | 17 | 19 | 12 | 8 | 7.5 | 6 | 6 | 53.8 | 39.3 | 42.4 | 45.5 | 8 | 7.5 | 6 | 7 | 48.8 | 135 | 147 | 159 | 5 | 7.5 | 0 |
| 24 FT | 18 | 20 | 12 | 8 | 7 | 7 | 7.5 | 58.8 | 39.8 | 42.9 | 46.0 | 8 | 7 | 6 | 6.5 | 48.8 | 136 | 148 | 160 | 5 | 7 | 0 |
| 26 FT | 19 | 21 | 13 | 8 | 7 | 7 | 8 | 59.1 | 40.3 | 43.4 | 46.5 | 8 | 7 | 6 | 7 | 49.0 | 137 | 149 | 161 | 5 | 7 | 0 |
| 28 FT | 20 | 22 | 13 | 8 | 7 | 7 | 7.5 | 59.1 | 42.4 | 45.6 | 48.9 | 8 | 7 | 6 | 6.5 | 49.0 | 138 | 150 | 162 | 5 | 6.5 | 0 |
| 30 FT | 21 | 23 | 14 | 8 | 7 | 7 | 8 | 59.5 | 46.1 | 49.6 | 53.1 | 8 | 7 | 6 | 7 | 49.3 | 139 | 151 | 163 | 5 | 7 | 0 |
| 32 FT | 22 | 24 | 14 | 8 | 6.5 | 7 | 7.5 | 59.5 | 46.8 | 50.1 | 53.6 | 8 | 6.5 | 6 | 6.5 | 49.3 | 140 | 152 | 164 | 5 | 6 | 0 |
| 34 FT | 23 | 25 | 14 | 8 | 6.5 | 7 | 7 | 59.5 | 44.0 | 47.3 | 50.5 | 8 | 6.5 | 6 | 6.5 | 49.3 | 141 | 153 | 165 | 5 | 6 | 0 |
| 36 FT | 24 | 26 | 15 | 8 | 6.5 | 7 | 7.5 | 59.9 | 49.5 | 53.1 | 56.8 | 8 | 6.5 | 6 | 6.5 | 49.6 | 142 | 154 | 166 | 5 | 6 | 0 |
| 38 FT | 25 | 27 | 15 | 8 | 6 | 7 | 7.5 | 59.9 | 50.1 | 53.8 | 57.3 | 8 | 6.5 | 6 | 6.5 | 49.6 | 143 | 155 | 167 | 6 | 8 | 0 |
| 40 FT | 26 | 28 | 15 | 8 | 6 | 7 | 7 | 59.9 | 50.8 | 54.3 | 57.9 | 8 | 6.5 | 6 | 6.5 | 49.6 | 144 | 156 | 168 | 6 | 8 | 0 |
| 42 FT | 27 | 29 | 16 | 8 | 6 | 7 | 7.5 | 60.3 | 51.3 | 54.9 | 58.5 | 8 | 6 | 6 | 6.5 | 49.9 | 145 | 157 | 169 | 6 | 8 | 0 |
| 44 FT | 28 | 30 | 16 | 8 | 6 | 7 | 7.5 | 60.3 | 53.6 | 57.4 | 61.1 | 8 | 6 | 6 | 6.5 | 49.9 | 146 | 158 | 170 | 6 | 8 | 0 |
| 46 FT | 28 | 30 | 16 | 9 | 7 | 7 | 6.5 | 60.3 | 53.6 | 57.4 | 61.1 | 8 | 6 | 6 | 6 | 49.9 | 146 | 158 | 170 | 6 | 8 | 0 |
| 48 FT | 29 | 31 | 17 | 9 | 7 | 7 | 7.5 | 60.5 | 54.3 | 58.0 | 61.8 | 8 | 6 | 6 | 6.5 | 50.1 | 147 | 159 | 171 | 6 | 7.5 | 0 |
| 50 FT | 30 | 32 | 17 | 9 | 7 | 7 | 7.5 | 60.5 | 54.9 | 58.6 | 62.3 | 8 | 6 | 6 | 6.5 | 50.1 | 148 | 160 | 172 | 6 | 7.5 | 0 |

## SPAN (S) = 13 FT  HEIGHT (HT) = 13 FT OR 14 FT

| DESIGN FILL | MEMBER THICKNESS | | | TOP SLAB BARS | | | | | | | | BOTTOM SLAB BARS | | | | | | | | WALL BARS | | |
|---|---|---|---|---|---|---|---|---|---|---|---|---|---|---|---|---|---|---|---|---|---|---|
| | | | | A1 BARS | | J3 BARS | | | K2 | | | A2 BARS | | J4 BARS | | | K3 | | | B2 BARS | | |
| | TS | BS | TX | SIZE | SPA. | SIZE | SPA. | C1 | HT=13' | HT=14' | | SIZE | SPA. | SIZE | SPA. | C4 | HT=13' | HT=14' | | SIZE | SPA. | G1 |
| 1 FT | 12 | 12 | 9 | 6 | 6 | 6 | 6.5 | 99.0 | 36.8 | 39.3 | | 6 | 6.5 | 6 | 6 | 99.0 | 164 | 176 | | 5 | 8.5 | 12 |
| 2 FT | 12 | 12 | 9 | 7 | 8 | 6 | 6.5 | 99.0 | 36.8 | 39.3 | | 6 | 6 | 6 | 6 | 99.0 | 164 | 176 | | 5 | 8 | 12 |
| 4 FT | 10 | 12 | 10 | 6 | 6 | 6 | 6 | 99.6 | 34.6 | 37.0 | | 7 | 8 | 6 | 6 | 99.6 | 164 | 176 | | 5 | 8 | 0 |
| 6 FT | 11 | 13 | 10 | 6 | 6 | 6 | 6.5 | 84.6 | 35.0 | 37.4 | | 6 | 6 | 6 | 6.5 | 99.6 | 165 | 177 | | 5 | 7.5 | 0 |
| 8 FT | 11 | 13 | 10 | 6 | 6 | 7 | 6.5 | 74.8 | 35.0 | 37.4 | | 7 | 7 | 6 | 6 | 84.6 | 165 | 177 | | 5 | 7 | 0 |
| 10 FT | 11 | 13 | 11 | 7 | 7.5 | 7 | 6.5 | 68.5 | 35.0 | 37.4 | | 7 | 6.5 | 6 | 6 | 70.1 | 165 | 177 | | 5 | 7.5 | 0 |
| 12 FT | 12 | 14 | 12 | 7 | 7 | 6 | 6.5 | 62.1 | 37.1 | 39.8 | | 7 | 6.5 | 6 | 6.5 | 67.3 | 166 | 178 | | 5 | 7 | 0 |
| 14 FT | 13 | 15 | 12 | 7 | 7 | 6 | 6 | 62.1 | 37.6 | 40.1 | | 7 | 6 | 6 | 6 | 65.5 | 167 | 179 | | 5 | 7 | 0 |
| 16 FT | 13 | 15 | 12 | 7 | 6.5 | 7 | 7 | 60.5 | 37.6 | 40.1 | | 7 | 6 | 6 | 6.5 | 58.8 | 167 | 179 | | 5 | 7 | 0 |
| 18 FT | 14 | 17 | 13 | 7 | 6.5 | 7 | 8 | 59.1 | 38.3 | 40.8 | | 7 | 6 | 6 | 6.5 | 59.1 | 169 | 181 | | 5 | 6.5 | 0 |
| 20 FT | 15 | 18 | 13 | 7 | 6 | 7 | 7 | 67.6 | 40.5 | 43.1 | | 7 | 6 | 6 | 6 | 59.1 | 170 | 182 | | 5 | 6.5 | 0 |
| 22 FT | 17 | 19 | 14 | 7 | 6 | 7 | 7.5 | 68.0 | 41.1 | 43.8 | | 7 | 6 | 6 | 6 | 59.5 | 171 | 183 | | 5 | 6 | 0 |
| 24 FT | 18 | 20 | 14 | 7 | 6 | 7 | 7.5 | 66.3 | 43.5 | 46.3 | | 8 | 7.5 | 6 | 6 | 59.5 | 172 | 184 | | 5 | 6 | 0 |
| 26 FT | 19 | 21 | 15 | 8 | 7.5 | 7 | 7.5 | 66.8 | 43.9 | 46.8 | | 8 | 7 | 6 | 6 | 58.1 | 173 | 185 | | 6 | 8 | 0 |
| 28 FT | 20 | 22 | 15 | 8 | 7 | 7 | 7 | 66.8 | 44.4 | 47.1 | | 8 | 7 | 6 | 6 | 58.1 | 174 | 186 | | 6 | 8 | 0 |
| 30 FT | 21 | 23 | 16 | 8 | 7 | 7 | 7 | 67.1 | 46.8 | 49.6 | | 8 | 7 | 6 | 6 | 58.5 | 175 | 187 | | 6 | 8 | 0 |
| 32 FT | 22 | 24 | 16 | 8 | 7 | 7 | 7 | 67.1 | 49.3 | 52.3 | | 8 | 7 | 7 | 7.5 | 61.9 | 176 | 188 | | 6 | 8 | 0 |
| 34 FT | 23 | 25 | 17 | 8 | 6.5 | 7 | 7 | 67.5 | 47.8 | 50.6 | | 8 | 6.5 | 6 | 6 | 58.9 | 177 | 189 | | 6 | 7.5 | 0 |
| 36 FT | 24 | 26 | 17 | 8 | 6.5 | 7 | 6.5 | 67.5 | 52.3 | 55.4 | | 8 | 6.5 | 7 | 7.5 | 62.3 | 178 | 190 | | 6 | 7.5 | 0 |
| 38 FT | 25 | 27 | 18 | 8 | 6.5 | 7 | 7 | 67.9 | 50.8 | 53.8 | | 8 | 6.5 | 6 | 6 | 59.1 | 179 | 191 | | 6 | 7 | 0 |
| 40 FT | 25 | 28 | 18 | 8 | 6 | 7 | 6 | 67.9 | 51.0 | 54.0 | | 8 | 6.5 | 6 | 6 | 59.1 | 180 | 192 | | 6 | 7 | 0 |
| 42 FT | 26 | 29 | 19 | 8 | 6 | 7 | 6.5 | 68.3 | 51.5 | 54.5 | | 8 | 6.5 | 6 | 6 | 59.5 | 181 | 193 | | 6 | 6.5 | 0 |
| 44 FT | 27 | 30 | 19 | 8 | 6 | 7 | 6 | 68.3 | 52.0 | 55.0 | | 8 | 6 | 6 | 6 | 59.5 | 182 | 194 | | 6 | 6.5 | 0 |
| 46 FT | 28 | 31 | 20 | 8 | 6 | 7 | 6.5 | 68.6 | 52.5 | 55.5 | | 8 | 6 | 6 | 6 | 59.9 | 183 | 195 | | 6 | 6.5 | 0 |
| 48 FT | 29 | 31 | 20 | 8 | 6 | 7 | 6 | 68.6 | 57.0 | 60.3 | | 8 | 6 | 7 | 7.5 | 63.4 | 183 | 195 | | 6 | 6.5 | 0 |
| 50 FT | 30 | 32 | 21 | 9 | 7.5 | 7 | 7 | 69.0 | 55.4 | 58.5 | | 8 | 6 | 6 | 6 | 60.1 | 184 | 196 | | 6 | 6 | 0 |

## SPAN (S) = 13 FT  HEIGHT (HT) = 15 FT OR 16 FT

| DESIGN FILL | MEMBER THICKNESS | | | TOP SLAB BARS | | | | | | | | BOTTOM SLAB BARS | | | | | | | | WALL BARS | | |
|---|---|---|---|---|---|---|---|---|---|---|---|---|---|---|---|---|---|---|---|---|---|---|
| | | | | A1 BARS | | J3 BARS | | | K2 | | | A2 BARS | | J4 BARS | | | K3 | | | B2 BARS | | |
| | TS | BS | TX | SIZE | SPA. | SIZE | SPA. | C1 | HT=15' | HT=16' | | SIZE | SPA. | SIZE | SPA. | C4 | HT=15 | HT=16 | | SIZE | SPA. | G1 |
| 1 FT | 13 | 13 | 11 | 6 | 6.5 | 5 | 6 | 98.5 | 34.1 | 36.3 | | 6 | 6.5 | 6 | 7 | 100.3 | 189 | 201 | | 5 | 7 | 12 |
| 2 FT | 13 | 13 | 11 | 6 | 6.5 | 5 | 7.5 | 100.3 | 36.1 | 38.4 | | 6 | 6.5 | 6 | 6.5 | 100.3 | 189 | 201 | | 5 | 7 | 12 |
| 4 FT | 10 | 13 | 11 | 6 | 6 | 6 | 6 | 100.3 | 35.6 | 37.8 | | 6 | 6 | 6 | 6 | 100.3 | 189 | 201 | | 5 | 6 | 0 |
| 6 FT | 10 | 13 | 12 | 6 | 6.5 | 6 | 6 | 100.8 | 35.6 | 37.8 | | 6 | 6 | 6 | 6 | 100.8 | 189 | 201 | | 5 | 6 | 0 |
| 8 FT | 11 | 13 | 12 | 6 | 6 | 6 | 6 | 94.1 | 35.9 | 38.0 | | 7 | 7.5 | 6 | 6 | 100.8 | 189 | 201 | | 6 | 8 | 0 |
| 10 FT | 12 | 14 | 13 | 6 | 6 | 6 | 6.5 | 81.1 | 36.1 | 38.4 | | 7 | 7 | 6 | 6 | 103.1 | 190 | 202 | | 6 | 8.5 | 0 |
| 12 FT | 13 | 15 | 14 | 6 | 6 | 6 | 6.5 | 74.8 | 38.6 | 40.9 | | 7 | 7 | 6 | 6 | 85.0 | 191 | 203 | | 5 | 6 | 0 |
| 14 FT | 14 | 16 | 14 | 7 | 7.5 | 6 | 6 | 74.8 | 39.0 | 41.3 | | 7 | 6.5 | 6 | 6 | 85.0 | 192 | 204 | | 6 | 8 | 0 |
| 16 FT | 14 | 16 | 14 | 7 | 7 | 6 | 6 | 68.0 | 39.0 | 41.3 | | 7 | 6.5 | 6 | 6 | 73.1 | 192 | 204 | | 5 | 6 | 0 |
| 18 FT | 15 | 17 | 14 | 7 | 6.5 | 7 | 7.5 | 78.3 | 43.5 | 46.0 | | 7 | 6 | 7 | 7 | 76.5 | 193 | 205 | | 6 | 8 | 0 |
| 20 FT | 16 | 18 | 15 | 7 | 6.5 | 7 | 7.5 | 78.6 | 43.9 | 46.4 | | 7 | 6 | 7 | 8 | 75.3 | 194 | 206 | | 6 | 8 | 0 |
| 22 FT | 17 | 19 | 16 | 7 | 6.5 | 7 | 7.5 | 77.4 | 46.4 | 49.0 | | 7 | 6 | 7 | 8 | 74.0 | 195 | 207 | | 6 | 8 | 0 |
| 24 FT | 18 | 20 | 16 | 7 | 6 | 7 | 7 | 77.4 | 46.9 | 49.5 | | 8 | 7.5 | 7 | 7 | 74.0 | 196 | 208 | | 6 | 8 | 0 |
| 26 FT | 19 | 21 | 17 | 7 | 6 | 7 | 7 | 77.9 | 49.5 | 52.3 | | 8 | 7.5 | 7 | 7 | 74.4 | 197 | 209 | | 6 | 7.5 | 0 |
| 28 FT | 20 | 23 | 18 | 7 | 6 | 7 | 7 | 78.3 | 48.0 | 50.6 | | 8 | 7.5 | 7 | 7 | 74.9 | 199 | 211 | | 6 | 7 | 0 |
| 30 FT | 21 | 23 | 18 | 8 | 7.5 | 7 | 7 | 78.3 | 52.5 | 55.5 | | 8 | 7 | 7 | 6.5 | 74.9 | 199 | 211 | | 6 | 7 | 0 |
| 32 FT | 22 | 24 | 19 | 8 | 7 | 7 | 7 | 78.8 | 53.0 | 55.9 | | 8 | 7 | 7 | 6.5 | 73.5 | 200 | 212 | | 6 | 6.5 | 0 |
| 34 FT | 23 | 25 | 19 | 8 | 7 | 7 | 6 | 78.8 | 53.5 | 56.4 | | 8 | 6.5 | 7 | 6 | 73.5 | 201 | 213 | | 6 | 6.5 | 0 |
| 36 FT | 24 | 26 | 20 | 8 | 7 | 7 | 6.5 | 79.3 | 54.0 | 56.9 | | 8 | 6.5 | 7 | 6.5 | 73.9 | 202 | 214 | | 6 | 6.5 | 0 |
| 38 FT | 25 | 27 | 21 | 8 | 6.5 | 7 | 6.5 | 79.6 | 56.8 | 59.8 | | 8 | 6.5 | 7 | 7 | 74.4 | 203 | 215 | | 6 | 6 | 0 |
| 40 FT | 25 | 28 | 22 | 8 | 6.5 | 7 | 6 | 78.4 | 57.0 | 60.0 | | 8 | 6.5 | 7 | 7 | 74.8 | 204 | 216 | | 6 | 6 | 0 |
| 42 FT | 26 | 29 | 22 | 8 | 6.5 | 7 | 6 | 80.1 | 57.5 | 60.5 | | 8 | 6.5 | 7 | 7 | 74.8 | 205 | 217 | | 6 | 6 | 0 |
| 44 FT | 27 | 30 | 23 | 8 | 6.5 | 7 | 6 | 80.5 | 58.0 | 61.0 | | 8 | 6.5 | 7 | 7 | 75.1 | 206 | 218 | | 7 | 7.5 | 0 |
| 46 FT | 28 | 31 | 24 | 8 | 6 | 7 | 6.5 | 81.0 | 58.5 | 61.5 | | 8 | 6 | 7 | 7 | 75.6 | 207 | 219 | | 7 | 7.5 | 0 |
| 48 FT | 29 | 31 | 24 | 8 | 6 | 7 | 6 | 81.0 | 61.1 | 64.3 | | 8 | 6 | 7 | 6.5 | 75.6 | 207 | 219 | | 7 | 7.5 | 0 |
| 50 FT | 29 | 32 | 25 | 8 | 6 | 7 | 6 | 79.6 | 59.0 | 62.0 | | 8 | 6 | 7 | 6.5 | 76.0 | 208 | 220 | | 7 | 7 | 0 |

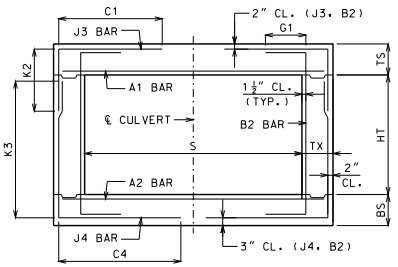


BAR DIMENSIONS DIAGRAM
SYMMETRICAL ABOUT ℄ CULVERT.

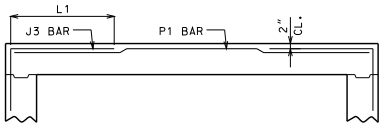


ALTERNATE J3 BAR

AT CONTRACTOR'S OPTION, ALTERNATE J3 BARS MAY BE USED WHEN THE DISTANCE BETWEEN THE ENDS OF J3 BARS IN THE TOP SLAB IS LESS THAN 2'-0". DIMENSION L1 (NOT C1) SHALL BE USED WITH ALTERNATE J3 BARS. WHERE L1 IS EQUAL TO 18", 22" AND 28" FOR #4, #5 AND #6 BARS, RESPECTIVELY. ADDITIONAL P1 BARS ARE REQUIRED WITH ALTERNATE J3 BARS WITH A LENGTH EQUAL TO A1 BARS, AND SIZE AND SPACING EQUAL TO J3 BARS. NO ADDITIONAL PAYMENT WILL BE MADE FOR THIS SUBSTITUTION.

GENERAL NOTES:

IF DESIGN FILL IS BETWEEN TABULATED DESIGN FILLS, USE THE NEXT GREATER TABULATED DESIGN FILL, EXCEPT FOR DESIGN FILLS BETWEEN 2 FEET AND 4 FEET. FOR DESIGN FILLS BETWEEN 2 FEET AND 4 FEET USE THE GREATER MEMBER THICKNESS, AREA OF REINFORCEMENT AND BAR DIMENSIONS FROM THE 2 FEET AND 4 FEET TABULATED DESIGN FILLS, AREA OF REINFORCEMENT EQUALS BAR AREA PER FOOT SPACING.

SPECIAL DESIGNS ARE REQUIRED WHEN THE DESIGN FILL IS LESS THAN 1 FOOT OR GREATER THAN 50 FEET.

DIMENSIONS ARE IN INCHES UNLESS OTHERWISE SPECIFIED.

DESIGN FILLS ARE MEASURED FROM THE TOP OF TOP SLAB TO THE TOP OF EARTH FILL OR ROADWAY.

CULVERTS MEET STRENGTH AND SERVICEABILITY REQUIREMENTS FOR THE DESIGN VEHICULAR LIVE LOAD HL-93 MINUS THE LANE LOAD.


MISSOURI HIGHWAYS AND TRANSPORTATION COMMISSION
105 WEST CAPITOL
JEFFERSON CITY, MO 65102
1-888-ASK-MODOT (1-888-275-6636)


STATE OF MISSOURI DENNIS W. HECKMAN NUMBER PE-27141 PROFESSIONAL ENGINEER
THIS SHEET HAS BEEN SIGNED, SEALED AND DATED ELECTRONICALLY.

# CONCRETE SINGLE BOX CULVERT

MEMBER THICKNESS
BAR SIZE, SPACING & DIMENSIONS

SPAN (S): 13 FEET
HEIGHT (HT): 7 THRU 16 FEET

DATE EFFECTIVE: 04/01/2011
DATE PREPARED: 4/18/2011

703.17

SHEET NO.
11 OF 14

IF A SEAL IS PRESENT ON THIS SHEET IT HAS BEEN ELECTRONICALLY SEALED AND DATED.

## SPAN (S) = 14 FT  HEIGHT (HT) = 7 FT OR 8 FT OR 9 FT

| DESIGN FILL | MEMBER THICKNESS | | | TOP SLAB BARS | | | | | | | | BOTTOM SLAB BARS | | | | | | | | WALL BARS | | |
|---|---|---|---|---|---|---|---|---|---|---|---|---|---|---|---|---|---|---|---|---|---|---|
| | | | | A1 BARS | | J3 BARS | | | | | | A2 BARS | | J4 BARS | | | | | | B2 BARS | | |
| | TS | BS | TX | SIZE | SPA. | SIZE | SPA. | C1 | K2 HT=7' | K2 HT=8' | K2 HT=9' | SIZE | SPA. | SIZE | SPA. | C4 | K3 HT=7' | K3 HT=8' | K3 HT=9' | SIZE | SPA. | G1 |
| 1 FT | 13 | 12 | 8 | 6 | 6 | 5 | 7 | 102.1 | 33.3 | 37.1 | 41.0 | 6 | 6.5 | 6 | 6.5 | 66.9 | 92 | 104 | 116 | 5 | 12 | 12 |
| 2 FT | 13 | 12 | 8 | 7 | 8 | 5 | 6 | 102.1 | 33.3 | 37.1 | 41.0 | 6 | 6 | 6 | 6 | 58.1 | 92 | 104 | 116 | 5 | 12 | 12 |
| 4 FT | 10 | 11 | 8 | 7 | 6.5 | 7 | 6 | 52.8 | 34.0 | 38.1 | 42.1 | 7 | 7 | 6 | 6 | 49.3 | 91 | 103 | 115 | 5 | 12 | 0 |
| 6 FT | 11 | 12 | 8 | 7 | 7 | 6 | 6 | 45.8 | 31.6 | 35.4 | 39.0 | 7 | 7 | 6 | 7 | 44.0 | 92 | 104 | 116 | 5 | 12 | 0 |
| 8 FT | 11 | 12 | 8 | 7 | 6.5 | 7 | 6.5 | 45.8 | 35.8 | 39.9 | 44.1 | 7 | 6 | 6 | 6 | 42.3 | 92 | 104 | 116 | 5 | 12 | 0 |
| 10 FT | 12 | 13 | 8 | 7 | 6 | 7 | 6.5 | 44.0 | 33.3 | 37.1 | 41.0 | 8 | 7.5 | 6 | 6.5 | 38.8 | 93 | 105 | 117 | 5 | 12 | 0 |
| 12 FT | 12 | 14 | 8 | 8 | 7 | 7 | 6 | 42.3 | 36.8 | 41.0 | 45.1 | 8 | 7 | 6 | 7 | 37.0 | 94 | 106 | 118 | 5 | 12 | 0 |
| 14 FT | 13 | 16 | 8 | 8 | 6.5 | 7 | 6 | 42.3 | 33.5 | 37.3 | 40.9 | 8 | 7 | 5 | 6 | 31.6 | 96 | 108 | 120 | 5 | 12 | 0 |
| 16 FT | 13 | 16 | 8 | 8 | 6.5 | 7 | 6 | 40.5 | 33.5 | 37.3 | 40.9 | 8 | 7 | 5 | 6 | 31.6 | 96 | 108 | 120 | 5 | 12 | 0 |
| 18 FT | 15 | 17 | 8 | 8 | 6.5 | 7 | 7 | 45.8 | 35.5 | 39.4 | 43.3 | 8 | 6.5 | 6 | 7.5 | 35.3 | 97 | 109 | 121 | 5 | 12 | 0 |
| 20 FT | 16 | 19 | 8 | 8 | 6 | 7 | 6.5 | 45.8 | 36.5 | 40.4 | 44.1 | 8 | 7 | 5 | 6 | 31.6 | 99 | 111 | 123 | 5 | 11.5 | 0 |
| 22 FT | 18 | 20 | 8 | 8 | 6 | 7 | 7.5 | 45.8 | 38.6 | 42.6 | 46.5 | 8 | 6.5 | 6 | 7.5 | 35.3 | 100 | 112 | 124 | 5 | 9.5 | 0 |
| 24 FT | 19 | 21 | 8 | 8 | 6 | 7 | 7 | 45.8 | 44.0 | 48.5 | 52.9 | 8 | 6.5 | 6 | 7.5 | 35.3 | 101 | 113 | 125 | 5 | 9.5 | 0 |
| 26 FT | 21 | 23 | 9 | 8 | 6 | 6 | 6.5 | 42.5 | 41.9 | 45.9 | 50.0 | 8 | 6.5 | 5 | 6 | 33.6 | 103 | 115 | 127 | 5 | 8.5 | 0 |
| 28 FT | 22 | 24 | 9 | 8 | 6 | 6 | 6 | 42.5 | 46.3 | 50.8 | 55.1 | 8 | 6.5 | 6 | 7 | 35.4 | 104 | 116 | 128 | 5 | 8.5 | 0 |
| 30 FT | 23 | 25 | 10 | 8 | 6 | 6 | 6.5 | 42.8 | 43.1 | 47.3 | 51.4 | 8 | 6.5 | 5 | 6 | 33.9 | 105 | 117 | 129 | 5 | 8.5 | 0 |
| 32 FT | 24 | 26 | 10 | 9 | 7.5 | 6 | 6 | 42.8 | 45.1 | 49.4 | 53.5 | 8 | 6 | 5 | 6 | 33.9 | 106 | 118 | 130 | 5 | 8 | 0 |
| 34 FT | 25 | 27 | 11 | 9 | 7 | 6 | 7 | 43.0 | 45.9 | 50.0 | 54.3 | 8 | 6 | 5 | 6 | 34.0 | 107 | 119 | 131 | 5 | 8.5 | 0 |
| 36 FT | 26 | 28 | 11 | 9 | 7 | 6 | 7 | 43.0 | 46.5 | 50.8 | 55.0 | 8 | 6 | 5 | 6 | 34.0 | 108 | 120 | 132 | 5 | 7.5 | 0 |
| 38 FT | 27 | 29 | 11 | 9 | 7 | 6 | 7 | 43.0 | 51.3 | 55.9 | 60.4 | 8 | 6 | 6 | 7.5 | 37.6 | 109 | 121 | 133 | 5 | 7.5 | 0 |
| 40 FT | 28 | 30 | 11 | 9 | 7 | 6 | 6.5 | 43.0 | 52.0 | 56.6 | 61.1 | 8 | 6 | 6 | 7 | 37.6 | 110 | 122 | 134 | 5 | 7.5 | 0 |
| 42 FT | 29 | 31 | 12 | 9 | 6.5 | 6 | 7 | 43.3 | 54.3 | 58.9 | 63.6 | 9 | 7.5 | 6 | 7.5 | 37.8 | 111 | 123 | 135 | 5 | 7 | 0 |
| 44 FT | 30 | 32 | 12 | 9 | 6.5 | 6 | 7 | 43.3 | 55.0 | 59.6 | 64.4 | 9 | 7 | 6 | 7.5 | 37.8 | 112 | 124 | 136 | 5 | 7 | 0 |
| 46 FT | 31 | 33 | 12 | 9 | 6.5 | 6 | 7 | 43.3 | 55.8 | 60.5 | 65.1 | 9 | 7 | 6 | 7 | 37.8 | 113 | 125 | 137 | 5 | 7 | 0 |
| 48 FT | 32 | 33 | 12 | 9 | 6.5 | 6 | 7 | 43.3 | 56.1 | 60.9 | 65.5 | 9 | 7 | 6 | 7 | 37.8 | 113 | 125 | 137 | 5 | 7 | 0 |
| 50 FT | 33 | 34 | 12 | 9 | 6.5 | 6 | 7 | 43.3 | 58.4 | 63.3 | 68.0 | 9 | 7 | 6 | 7 | 37.8 | 114 | 126 | 138 | 5 | 6.5 | 0 |

## SPAN (S) = 14 FT  HEIGHT (HT) = 10 FT OR 11 FT OR 12 FT

| DESIGN FILL | MEMBER THICKNESS | | | TOP SLAB BARS | | | | | | | | | BOTTOM SLAB BARS | | | | | | | | | WALL BARS | | |
|---|---|---|---|---|---|---|---|---|---|---|---|---|---|---|---|---|---|---|---|---|---|---|---|---|
| | | | | A1 BARS | | J3 BARS | | | | | | | A2 BARS | | J4 BARS | | | | | | | B2 BARS | | |
| | TS | BS | TX | SIZE | SPA. | SIZE | SPA. | C1 | K2 HT=10' | K2 HT=11' | K2 HT=12' | | SIZE | SPA. | SIZE | SPA. | C4 | K3 HT=10' | K3 HT=11' | K3 HT=12' | SIZE | SPA. | G1 |
| 1 FT | 13 | 12 | 9 | 6 | 6 | 5 | 6.5 | 102.6 | 33.6 | 36.5 | 39.4 | | 6 | 6 | 6 | 6 | 106.3 | 128 | 140 | 152 | 5 | 9 | 12 |
| 2 FT | 13 | 12 | 9 | 7 | 7.5 | 6 | 6 | 102.6 | 33.6 | 36.5 | 39.4 | | 7 | 7.5 | 6 | 6 | 106.3 | 128 | 140 | 152 | 5 | 8.5 | 12 |
| 4 FT | 11 | 12 | 9 | 7 | 7 | 6 | 6.5 | 69.0 | 35.9 | 39.0 | 42.1 | | 7 | 7.5 | 6 | 6 | 72.6 | 128 | 140 | 152 | 5 | 9 | 0 |
| 6 FT | 11 | 12 | 9 | 7 | 7 | 6 | 6 | 60.1 | 35.9 | 39.0 | 42.1 | | 7 | 6.5 | 6 | 6 | 62.0 | 128 | 140 | 152 | 5 | 9 | 0 |
| 8 FT | 11 | 12 | 10 | 7 | 7 | 6 | 6 | 55.1 | 35.9 | 39.0 | 42.1 | | 7 | 6.5 | 6 | 6 | 57.0 | 128 | 140 | 152 | 5 | 10 | 0 |
| 10 FT | 12 | 13 | 10 | 7 | 6.5 | 6 | 6 | 53.4 | 36.4 | 39.5 | 42.6 | | 7 | 6 | 6 | 6 | 53.4 | 129 | 141 | 153 | 5 | 9.5 | 0 |
| 12 FT | 12 | 14 | 10 | 8 | 7.5 | 7 | 6 | 55.1 | 36.6 | 39.8 | 42.9 | | 8 | 7 | 6 | 6 | 51.6 | 130 | 142 | 154 | 5 | 9 | 0 |
| 14 FT | 14 | 16 | 10 | 8 | 7.5 | 7 | 7 | 53.4 | 39.1 | 42.4 | 45.6 | | 8 | 7.5 | 6 | 6 | 49.9 | 132 | 144 | 156 | 5 | 8 | 0 |
| 16 FT | 14 | 16 | 10 | 8 | 7 | 7 | 7 | 49.9 | 39.1 | 42.4 | 45.6 | | 8 | 7 | 6 | 6.5 | 46.3 | 132 | 144 | 156 | 5 | 9 | 0 |
| 18 FT | 15 | 17 | 11 | 8 | 7 | 7 | 7.5 | 59.1 | 39.8 | 42.9 | 46.1 | | 8 | 7 | 6 | 6 | 46.5 | 133 | 145 | 157 | 5 | 9.5 | 0 |
| 20 FT | 16 | 19 | 11 | 8 | 6.5 | 7 | 6.5 | 57.3 | 37.5 | 40.5 | 43.5 | | 8 | 7 | 6 | 7 | 46.5 | 135 | 147 | 159 | 5 | 8 | 0 |
| 22 FT | 18 | 20 | 12 | 8 | 7 | 7 | 7.5 | 57.6 | 39.8 | 42.9 | 46.0 | | 8 | 7 | 6 | 6.5 | 46.8 | 136 | 148 | 160 | 5 | 8 | 0 |
| 24 FT | 19 | 21 | 12 | 8 | 6.5 | 7 | 7 | 57.6 | 43.4 | 46.8 | 50.1 | | 8 | 6.5 | 6 | 6.5 | 46.8 | 137 | 149 | 161 | 5 | 7.5 | 0 |
| 26 FT | 20 | 23 | 13 | 8 | 6.5 | 7 | 7 | 57.9 | 41.1 | 44.3 | 47.4 | | 8 | 6.5 | 6 | 7 | 47.0 | 139 | 151 | 163 | 5 | 7.5 | 0 |
| 28 FT | 21 | 24 | 13 | 8 | 6 | 7 | 6.5 | 57.9 | 43.3 | 46.5 | 49.6 | | 8 | 6.5 | 6 | 7 | 47.0 | 140 | 152 | 164 | 5 | 7 | 0 |
| 30 FT | 22 | 25 | 14 | 8 | 6 | 7 | 6.5 | 58.3 | 43.8 | 47.0 | 50.3 | | 8 | 6.5 | 6 | 7 | 47.4 | 141 | 153 | 165 | 5 | 7 | 0 |
| 32 FT | 24 | 26 | 14 | 8 | 6 | 7 | 7.5 | 58.3 | 46.3 | 49.5 | 52.9 | | 8 | 6 | 6 | 6.5 | 47.4 | 142 | 154 | 166 | 5 | 6.5 | 0 |
| 34 FT | 25 | 27 | 14 | 8 | 6 | 7 | 7.5 | 58.3 | 46.8 | 50.1 | 53.5 | | 8 | 6 | 6 | 6.5 | 47.4 | 143 | 155 | 167 | 5 | 6 | 0 |
| 36 FT | 26 | 28 | 14 | 9 | 7.5 | 7 | 6.5 | 58.3 | 47.4 | 50.6 | 54.0 | | 8 | 6 | 6 | 6.5 | 47.4 | 144 | 156 | 168 | 5 | 6 | 0 |
| 38 FT | 27 | 29 | 15 | 9 | 7 | 7 | 7.5 | 58.5 | 51.3 | 54.9 | 58.5 | | 8 | 6 | 6 | 6.5 | 47.6 | 145 | 157 | 169 | 6 | 8 | 0 |
| 40 FT | 28 | 30 | 15 | 9 | 7 | 7 | 7.5 | 58.5 | 53.6 | 57.4 | 61.1 | | 8 | 6 | 6 | 6.5 | 47.6 | 146 | 158 | 170 | 6 | 8 | 0 |
| 42 FT | 29 | 31 | 15 | 9 | 7 | 7 | 6.5 | 58.5 | 54.3 | 58.0 | 61.8 | | 9 | 7.5 | 6 | 6.5 | 47.6 | 147 | 159 | 171 | 6 | 8 | 0 |
| 44 FT | 30 | 32 | 16 | 9 | 7 | 7 | 7.5 | 58.9 | 54.9 | 58.6 | 62.3 | | 9 | 7 | 6 | 6.5 | 49.6 | 148 | 160 | 172 | 6 | 8 | 0 |
| 46 FT | 31 | 33 | 16 | 9 | 6.5 | 7 | 7.5 | 58.9 | 55.5 | 59.3 | 62.9 | | 9 | 7 | 6 | 6.5 | 49.6 | 149 | 161 | 173 | 6 | 8 | 0 |
| 48 FT | 31 | 33 | 16 | 9 | 6.5 | 7 | 6.5 | 58.9 | 55.5 | 59.3 | 62.9 | | 9 | 7 | 6 | 6 | 49.6 | 149 | 161 | 173 | 6 | 8 | 0 |
| 50 FT | 32 | 34 | 17 | 9 | 6.5 | 7 | 7 | 59.3 | 56.1 | 59.9 | 63.5 | | 9 | 7 | 6 | 6.5 | 50.0 | 150 | 162 | 174 | 6 | 7.5 | 0 |

## SPAN (S) = 14 FT  HEIGHT (HT) = 13 FT OR 14 FT

| DESIGN FILL | MEMBER THICKNESS | | | TOP SLAB BARS | | | | | | | BOTTOM SLAB BARS | | | | | | | | WALL BARS | | |
|---|---|---|---|---|---|---|---|---|---|---|---|---|---|---|---|---|---|---|---|---|---|
| | | | | A1 BARS | | J3 BARS | | | | | A2 BARS | | J4 BARS | | | | | | B2 BARS | | |
| | TS | BS | TX | SIZE | SPA. | SIZE | SPA. | C1 | K2 HT=13' | K2 HT=14' | SIZE | SPA. | SIZE | SPA. | C4 | K3 HT=13' | K3 HT=14' | SIZE | SPA. | G1 |
| 1 FT | 12 | 12 | 10 | 6 | 6 | 6 | 7 | 105.0 | 36.8 | 39.3 | 6 | 6 | 6 | 6 | 105.0 | 164 | 176 | 5 | 8 | 12 |
| 2 FT | 13 | 13 | 10 | 7 | 8 | 6 | 7 | 105.0 | 35.4 | 37.8 | 7 | 8 | 6 | 6.5 | 105.0 | 165 | 177 | 5 | 8 | 12 |
| 4 FT | 11 | 12 | 10 | 7 | 7.5 | 6 | 6.5 | 105.0 | 36.5 | 39.0 | 7 | 7 | 6 | 6 | 105.0 | 164 | 176 | 5 | 8 | 0 |
| 6 FT | 11 | 13 | 10 | 7 | 7.5 | 6 | 6 | 76.5 | 35.0 | 37.4 | 7 | 7 | 6 | 6 | 87.3 | 165 | 177 | 5 | 8 | 0 |
| 8 FT | 11 | 13 | 11 | 7 | 7.5 | 6 | 6 | 66.3 | 35.0 | 37.4 | 7 | 6.5 | 6 | 6 | 71.6 | 165 | 177 | 5 | 7.5 | 0 |
| 10 FT | 12 | 14 | 11 | 7 | 7 | 6 | 6 | 64.5 | 37.1 | 39.8 | 7 | 6 | 6 | 6 | 68.0 | 166 | 178 | 5 | 7.5 | 0 |
| 12 FT | 13 | 15 | 12 | 7 | 6.5 | 6 | 6 | 61.3 | 37.6 | 40.1 | 7 | 6 | 6 | 6.5 | 64.8 | 167 | 179 | 5 | 7 | 0 |
| 14 FT | 14 | 16 | 13 | 7 | 6.5 | 6 | 6 | 59.8 | 38.0 | 40.5 | 7 | 6 | 6 | 6.5 | 63.4 | 168 | 180 | 5 | 6.5 | 0 |
| 16 FT | 14 | 16 | 13 | 7 | 6 | 7 | 8 | 59.8 | 38.0 | 40.5 | 8 | 7.5 | 6 | 6 | 56.1 | 168 | 180 | 5 | 7.5 | 0 |
| 18 FT | 15 | 18 | 13 | 7 | 6 | 7 | 7 | 67.0 | 40.5 | 43.1 | 8 | 7.5 | 6 | 6.5 | 56.1 | 170 | 182 | 5 | 6.5 | 0 |
| 20 FT | 16 | 19 | 13 | 8 | 7 | 7 | 6.5 | 65.1 | 40.9 | 43.5 | 8 | 7 | 6 | 6 | 56.1 | 171 | 183 | 5 | 6.5 | 0 |
| 22 FT | 18 | 20 | 14 | 8 | 7 | 7 | 7 | 65.5 | 43.5 | 46.3 | 8 | 7 | 6 | 6 | 56.4 | 172 | 184 | 5 | 6 | 0 |
| 24 FT | 19 | 22 | 14 | 8 | 7 | 7 | 7 | 65.5 | 44.1 | 46.9 | 8 | 7 | 6 | 6 | 56.4 | 174 | 186 | 5 | 6 | 0 |
| 26 FT | 20 | 23 | 15 | 8 | 6.5 | 7 | 7 | 65.9 | 44.6 | 47.4 | 8 | 6.5 | 6 | 6 | 56.8 | 175 | 187 | 6 | 8 | 0 |
| 28 FT | 21 | 24 | 15 | 8 | 6.5 | 7 | 6.5 | 65.9 | 45.1 | 47.9 | 8 | 6.5 | 6 | 6 | 56.8 | 176 | 188 | 6 | 8 | 0 |
| 30 FT | 22 | 25 | 16 | 8 | 6.5 | 7 | 6.5 | 66.3 | 47.5 | 50.4 | 8 | 6.5 | 6 | 6 | 57.0 | 177 | 189 | 6 | 8 | 0 |
| 32 FT | 23 | 26 | 16 | 8 | 6 | 7 | 6 | 66.3 | 50.0 | 53.0 | 8 | 6 | 7 | 8 | 58.9 | 178 | 190 | 6 | 8 | 0 |
| 34 FT | 24 | 27 | 17 | 8 | 6 | 7 | 6 | 66.6 | 48.5 | 51.4 | 8 | 6 | 6 | 6 | 57.4 | 179 | 191 | 6 | 7.5 | 0 |
| 36 FT | 25 | 28 | 17 | 8 | 6 | 7 | 6 | 66.6 | 53.0 | 56.1 | 8 | 6 | 7 | 8 | 59.3 | 180 | 192 | 6 | 7.5 | 0 |
| 38 FT | 26 | 29 | 18 | 9 | 7.5 | 7 | 6 | 67.0 | 51.5 | 54.5 | 8 | 6 | 6 | 6 | 57.6 | 181 | 193 | 6 | 7 | 0 |
| 40 FT | 27 | 30 | 18 | 9 | 7 | 7 | 6 | 67.0 | 54.1 | 57.3 | 8 | 6 | 7 | 8 | 61.4 | 182 | 194 | 6 | 7 | 0 |
| 42 FT | 28 | 31 | 19 | 9 | 7 | 7 | 6 | 67.4 | 52.5 | 55.5 | 9 | 7.5 | 6 | 6 | 58.0 | 183 | 195 | 6 | 6.5 | 0 |
| 44 FT | 29 | 32 | 19 | 9 | 7 | 7 | 6 | 67.4 | 57.3 | 60.5 | 9 | 7 | 7 | 8 | 61.8 | 184 | 196 | 6 | 6.5 | 0 |
| 46 FT | 30 | 33 | 20 | 9 | 7 | 7 | 6.5 | 67.6 | 55.6 | 58.8 | 9 | 7 | 6 | 6 | 58.3 | 185 | 197 | 6 | 6.5 | 0 |
| 48 FT | 31 | 34 | 20 | 9 | 6.5 | 7 | 6 | 67.6 | 58.4 | 61.5 | 9 | 7 | 7 | 8 | 62.0 | 186 | 198 | 6 | 6.5 | 0 |
| 50 FT | 32 | 35 | 21 | 9 | 6.5 | 7 | 6.5 | 69.9 | 56.6 | 59.8 | 9 | 7 | 6 | 6 | 58.6 | 187 | 199 | 6 | 6 | 0 |

## SPAN (S) = 14 FT  HEIGHT (HT) = 15 FT OR 16 FT

| DESIGN FILL | MEMBER THICKNESS | | | TOP SLAB BARS | | | | | | | BOTTOM SLAB BARS | | | | | | | | WALL BARS | | |
|---|---|---|---|---|---|---|---|---|---|---|---|---|---|---|---|---|---|---|---|---|---|
| | | | | A1 BARS | | J3 BARS | | | | | A2 BARS | | J4 BARS | | | | | | B2 BARS | | |
| | TS | BS | TX | SIZE | SPA. | SIZE | SPA. | C1 | K2 HT=15' | K2 HT=16' | SIZE | SPA. | SIZE | SPA. | C4 | K3 HT=15' | K3 HT=16' | SIZE | SPA. | G1 |
| 1 FT | 12 | 13 | 11 | 6 | 6 | 6 | 6 | 105.6 | 36.0 | 38.1 | 6 | 6 | 6 | 6.5 | 105.6 | 189 | 201 | 5 | 7 | 12 |
| 2 FT | 13 | 14 | 11 | 6 | 6 | 6 | 7 | 105.6 | 38.4 | 40.6 | 6 | 6 | 6 | 6.5 | 105.6 | 190 | 202 | 5 | 7 | 12 |
| 4 FT | 11 | 13 | 11 | 7 | 7.5 | 6 | 6 | 105.6 | 35.9 | 38.0 | 7 | 7.5 | 6 | 6 | 105.6 | 189 | 201 | 5 | 6 | 0 |
| 6 FT | 11 | 13 | 12 | 6 | 6 | 6 | 6.5 | 99.0 | 35.9 | 38.0 | 7 | 7 | 6 | 6 | 108.0 | 189 | 201 | 5 | 6 | 0 |
| 8 FT | 12 | 14 | 12 | 7 | 8 | 6 | 6.5 | 86.4 | 36.1 | 38.4 | 7 | 7 | 6 | 6 | 108.0 | 190 | 202 | 5 | 6 | 0 |
| 10 FT | 12 | 15 | 13 | 7 | 7.5 | 6 | 6 | 74.3 | 36.4 | 38.5 | 7 | 6.5 | 6 | 6.5 | 90.5 | 191 | 203 | 5 | 6 | 0 |
| 12 FT | 13 | 16 | 14 | 7 | 7 | 6 | 6 | 71.0 | 38.8 | 41.0 | 7 | 6.5 | 6 | 6.5 | 81.9 | 192 | 204 | 5 | 6 | 0 |
| 14 FT | 14 | 17 | 14 | 7 | 6.5 | 7 | 7.5 | 72.8 | 39.1 | 41.4 | 7 | 6 | 6 | 6 | 78.3 | 193 | 205 | 5 | 6 | 0 |
| 16 FT | 14 | 17 | 14 | 7 | 6.5 | 7 | 7.5 | 67.4 | 39.1 | 41.4 | 7 | 6 | 6 | 6 | 69.1 | 193 | 205 | 5 | 6 | 0 |
| 18 FT | 15 | 18 | 14 | 7 | 6 | 7 | 7 | 76.5 | 43.6 | 46.3 | 8 | 7 | 7 | 7 | 72.8 | 194 | 206 | 5 | 6 | 0 |
| 20 FT | 16 | 19 | 15 | 8 | 7.5 | 7 | 6.5 | 75.0 | 44.1 | 46.6 | 8 | 7 | 7 | 7.5 | 71.4 | 195 | 207 | 6 | 8 | 0 |
| 22 FT | 18 | 20 | 16 | 8 | 7.5 | 7 | 7 | 75.5 | 49.0 | 51.8 | 8 | 7 | 7 | 7 | 71.8 | 196 | 208 | 6 | 8 | 0 |
| 24 FT | 19 | 22 | 16 | 8 | 7 | 7 | 6.5 | 75.5 | 47.5 | 50.1 | 8 | 7 | 7 | 7 | 71.8 | 198 | 210 | 6 | 8 | 0 |
| 26 FT | 20 | 23 | 17 | 8 | 7 | 7 | 6.5 | 75.9 | 48.0 | 50.6 | 8 | 6.5 | 7 | 7 | 72.1 | 199 | 211 | 6 | 7.5 | 0 |
| 28 FT | 21 | 24 | 18 | 8 | 7 | 7 | 6.5 | 76.3 | 48.4 | 51.0 | 8 | 6.5 | 7 | 7 | 70.6 | 200 | 212 | 6 | 7 | 0 |
| 30 FT | 22 | 25 | 18 | 8 | 6.5 | 7 | 6 | 76.3 | 51.0 | 53.9 | 8 | 6.5 | 7 | 6.5 | 70.6 | 201 | 213 | 6 | 7 | 0 |
| 32 FT | 23 | 26 | 19 | 8 | 6.5 | 7 | 6 | 76.6 | 51.5 | 54.3 | 8 | 6.5 | 7 | 7 | 71.0 | 202 | 214 | 6 | 6.5 | 0 |
| 34 FT | 24 | 27 | 20 | 8 | 6.5 | 7 | 6 | 77.1 | 52.0 | 54.8 | 8 | 6 | 7 | 7 | 71.5 | 203 | 215 | 6 | 6.5 | 0 |
| 36 FT | 25 | 28 | 20 | 8 | 6 | 7 | 6 | 77.1 | 52.5 | 55.3 | 8 | 6 | 7 | 6.5 | 71.5 | 204 | 216 | 6 | 6.5 | 0 |
| 38 FT | 26 | 29 | 21 | 8 | 6 | 7 | 6 | 77.5 | 55.3 | 58.1 | 8 | 6 | 7 | 7 | 71.9 | 205 | 217 | 6 | 6 | 0 |
| 40 FT | 27 | 30 | 22 | 8 | 6 | 7 | 6 | 77.9 | 58.0 | 61.0 | 8 | 6 | 7 | 7 | 72.3 | 206 | 218 | 6 | 6 | 0 |
| 42 FT | 28 | 31 | 23 | 8 | 6 | 7 | 6.5 | 78.3 | 58.5 | 61.5 | 8 | 6 | 7 | 7.5 | 72.6 | 207 | 219 | 7 | 8 | 0 |
| 44 FT | 29 | 32 | 23 | 9 | 7.5 | 7 | 6 | 78.3 | 59.0 | 62.0 | 9 | 7.5 | 7 | 7 | 72.6 | 208 | 220 | 7 | 7.5 | 0 |
| 46 FT | 30 | 33 | 24 | 9 | 7 | 7 | 6 | 78.8 | 61.9 | 65.0 | 9 | 7 | 7 | 7 | 73.0 | 209 | 221 | 7 | 7.5 | 0 |
| 48 FT | 31 | 34 | 25 | 9 | 7 | 7 | 6.5 | 79.1 | 62.4 | 65.5 | 9 | 7 | 7 | 7 | 73.4 | 210 | 222 | 7 | 7.5 | 0 |
| 50 FT | 32 | 35 | 25 | 9 | 7 | 7 | 6 | 79.1 | 62.9 | 66.0 | 9 | 7 | 7 | 7 | 73.4 | 211 | 223 | 7 | 7 | 0 |

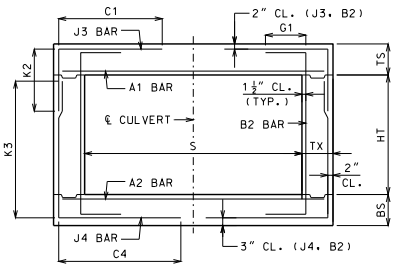


BAR DIMENSIONS DIAGRAM
SYMMETRICAL ABOUT ℄ CULVERT.

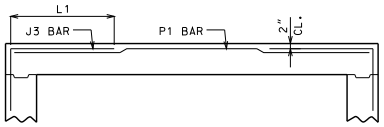


ALTERNATE J3 BAR

AT CONTRACTOR'S OPTION, ALTERNATE J3 BARS MAY BE USED WHEN THE DISTANCE BETWEEN THE ENDS OF J3 BARS IN THE TOP SLAB IS LESS THAN 2'-0". DIMENSION L1 (NOT C1) SHALL BE USED WITH ALTERNATE J3 BARS. WHERE L1 IS EQUAL TO 18", 22" AND 28" FOR #4, #5 AND #6 BARS, RESPECTIVELY. ADDITIONAL P1 BARS ARE REQUIRED WITH ALTERNATE J3 BARS WITH A LENGTH EQUAL TO A1 BARS, AND SIZE AND SPACING EQUAL TO J3 BARS. NO ADDITIONAL PAYMENT WILL BE MADE FOR THIS SUBSTITUTION.

GENERAL NOTES:

IF DESIGN FILL IS BETWEEN TABULATED DESIGN FILLS, USE THE NEXT GREATER TABULATED DESIGN FILL, EXCEPT FOR DESIGN FILLS BETWEEN 2 FEET AND 4 FEET. FOR DESIGN FILLS BETWEEN 2 FEET AND 4 FEET USE THE GREATER MEMBER THICKNESS, AREA OF REINFORCEMENT AND BAR DIMENSIONS FROM THE 2 FEET AND 4 FEET TABULATED DESIGN FILLS. AREA OF REINFORCEMENT EQUALS BAR AREA PER FOOT SPACING.

SPECIAL DESIGNS ARE REQUIRED WHEN THE DESIGN FILL IS LESS THAN 1 FOOT OR GREATER THAN 50 FEET.

DIMENSIONS ARE IN INCHES UNLESS OTHERWISE SPECIFIED.

DESIGN FILLS ARE MEASURED FROM THE TOP OF TOP SLAB TO THE TOP OF EARTH FILL OR ROADWAY.

CULVERTS MEET STRENGTH AND SERVICEABILITY REQUIREMENTS FOR THE DESIGN VEHICULAR LIVE LOAD HL-93 MINUS THE LANE LOAD.


MISSOURI HIGHWAYS AND TRANSPORTATION COMMISSION
105 WEST CAPITOL
JEFFERSON CITY, MO 65102
1-888-ASK-MODOT (1-888-275-6636)


STATE OF MISSOURI DENNIS W. HECKMAN NUMBER PE-27141 PROFESSIONAL ENGINEER
THIS SHEET HAS BEEN SIGNED, SEALED AND DATED ELECTRONICALLY.

# CONCRETE SINGLE BOX CULVERT

MEMBER THICKNESS
BAR SIZE, SPACING & DIMENSIONS

SPAN (S): 14 FEET
HEIGHT (HT): 7 THRU 16 FEET

DATE EFFECTIVE: 04/01/2011
DATE PREPARED: 4/18/2011

703.17

SHEET NO.
12 OF 14

IF A SEAL IS PRESENT ON THIS SHEET IT HAS BEEN ELECTRONICALLY SEALED AND DATED.

## SPAN (S) = 15 FT  HEIGHT (HT) = 8 FT OR 9 FT OR 10 FT

| DESIGN FILL | MEMBER THICKNESS | | | TOP SLAB BARS | | | | | | | | | BOTTOM SLAB BARS | | | | | | | | | WALL BARS | | |
|---|---|---|---|---|---|---|---|---|---|---|---|---|---|---|---|---|---|---|---|---|---|---|---|---|
| | | | | A1 BARS | | J3 BARS | | | | | | | A2 BARS | | J4 BARS | | | | | | | B2 BARS | | |
| | TS | BS | TX | SIZE | SPA. | SIZE | SPA. | C1 | K2 | | | | SIZE | SPA. | SIZE | SPA. | C4 | K3 | | | | SIZE | SPA. | G1 |
| | | | | | | | | | HT=8' | HT=9' | HT=10' | | | | | | | HT=8' | HT=9' | HT=10' | | | | |
| 1 FT | 12 | 13 | 8 | 7 | 7 | 6 | 7 | 109.0 | 32.5 | 35.9 | 39.3 | | 6 | 6 | 6 | 7 | 82.8 | 105 | 117 | 129 | | 5 | 12 | 12 |
| 2 FT | 12 | 13 | 8 | 7 | 6.5 | 6 | 6.5 | 109.0 | 33.6 | 37.1 | 40.6 | | 7 | 7.5 | 6 | 6.5 | 65.8 | 105 | 117 | 129 | | 5 | 12 | 12 |
| 4 FT | 11 | 12 | 8 | 7 | 6 | 6 | 6 | 52.6 | 35.4 | 39.0 | 42.8 | | 7 | 7 | 6 | 6 | 52.6 | 104 | 116 | 128 | | 5 | 12 | 0 |
| 6 FT | 11 | 12 | 9 | 7 | 6.5 | 6 | 6 | 51.0 | 35.4 | 39.0 | 42.8 | | 7 | 6.5 | 6 | 6 | 49.1 | 104 | 116 | 128 | | 5 | 12 | 0 |
| 8 FT | 11 | 12 | 9 | 7 | 6 | 7 | 6 | 51.0 | 35.4 | 39.0 | 42.8 | | 8 | 7.5 | 6 | 6 | 47.3 | 104 | 116 | 128 | | 5 | 12 | 0 |
| 10 FT | 12 | 14 | 9 | 8 | 7.5 | 7 | 6 | 49.1 | 32.8 | 36.1 | 39.5 | | 8 | 7 | 6 | 7 | 43.5 | 106 | 118 | 130 | | 5 | 12 | 0 |
| 12 FT | 13 | 15 | 9 | 8 | 6.5 | 7 | 6.5 | 47.3 | 34.5 | 38.0 | 41.5 | | 8 | 6.5 | 6 | 7 | 41.6 | 107 | 119 | 131 | | 5 | 12 | 0 |
| 14 FT | 14 | 17 | 9 | 8 | 6.5 | 7 | 6.5 | 45.4 | 34.1 | 37.5 | 40.9 | | 8 | 6.5 | 6 | 8 | 39.8 | 109 | 121 | 133 | | 5 | 12 | 0 |
| 16 FT | 14 | 17 | 9 | 8 | 6 | 7 | 6 | 43.5 | 34.1 | 37.5 | 40.9 | | 8 | 6.5 | 6 | 8 | 37.8 | 109 | 121 | 133 | | 5 | 12 | 0 |
| 18 FT | 16 | 19 | 9 | 8 | 6 | 7 | 7 | 49.1 | 36.5 | 40.0 | 43.5 | | 8 | 6.5 | 6 | 8 | 37.8 | 111 | 123 | 135 | | 5 | 12 | 0 |
| 20 FT | 17 | 20 | 9 | 9 | 7.5 | 7 | 6 | 49.1 | 37.1 | 40.6 | 44.1 | | 8 | 6.5 | 6 | 7.5 | 37.8 | 112 | 124 | 136 | | 5 | 11 | 0 |
| 22 FT | 19 | 21 | 9 | 9 | 7.5 | 7 | 7 | 49.1 | 43.3 | 47.3 | 51.1 | | 8 | 6 | 6 | 7 | 37.8 | 113 | 125 | 137 | | 5 | 9 | 0 |
| 24 FT | 21 | 23 | 10 | 8 | 6 | 6 | 6 | 43.8 | 41.9 | 45.6 | 49.3 | | 8 | 6 | 6 | 8 | 38.0 | 115 | 127 | 139 | | 5 | 9 | 0 |
| 26 FT | 22 | 24 | 11 | 9 | 7.5 | 6 | 6 | 43.9 | 42.5 | 46.3 | 49.9 | | 8 | 6 | 6 | 8 | 38.3 | 116 | 128 | 140 | | 5 | 10.5 | 0 |
| 28 FT | 23 | 25 | 11 | 9 | 7 | 6 | 6 | 43.9 | 43.1 | 46.8 | 50.5 | | 8 | 6 | 6 | 8 | 38.3 | 117 | 129 | 141 | | 5 | 9 | 0 |
| 30 FT | 24 | 26 | 11 | 9 | 7 | 7 | 7.5 | 49.6 | 49.4 | 53.5 | 57.8 | | 9 | 7.5 | 6 | 7 | 38.3 | 118 | 130 | 142 | | 5 | 8 | 0 |
| 32 FT | 26 | 28 | 12 | 9 | 7 | 6 | 6.5 | 46.1 | 46.4 | 50.3 | 54.1 | | 8 | 6 | 6 | 8.5 | 38.4 | 120 | 132 | 144 | | 5 | 8 | 0 |
| 34 FT | 27 | 29 | 12 | 9 | 7 | 6 | 6.5 | 46.1 | 51.5 | 55.6 | 59.9 | | 9 | 7.5 | 6 | 8 | 38.4 | 121 | 133 | 145 | | 5 | 7.5 | 0 |
| 36 FT | 28 | 30 | 12 | 9 | 6.5 | 6 | 6.5 | 46.1 | 52.1 | 56.4 | 60.5 | | 9 | 7 | 6 | 8 | 38.4 | 122 | 134 | 146 | | 5 | 7 | 0 |
| 38 FT | 29 | 31 | 12 | 9 | 6.5 | 6 | 6 | 46.1 | 54.4 | 58.6 | 63.0 | | 9 | 7 | 6 | 7.5 | 38.4 | 123 | 135 | 147 | | 5 | 7 | 0 |
| 40 FT | 30 | 32 | 13 | 9 | 6.5 | 6 | 6.5 | 46.4 | 55.1 | 59.4 | 63.8 | | 9 | 7 | 6 | 7.5 | 40.5 | 124 | 136 | 148 | | 5 | 6.5 | 0 |
| 42 FT | 31 | 33 | 13 | 9 | 6.5 | 6 | 6.5 | 46.4 | 55.8 | 60.1 | 64.5 | | 9 | 7 | 6 | 7 | 40.5 | 125 | 137 | 149 | | 5 | 6.5 | 0 |
| 44 FT | 32 | 34 | 13 | 9 | 6 | 6 | 6.5 | 46.4 | 56.5 | 60.9 | 65.1 | | 9 | 6.5 | 6 | 7 | 40.5 | 126 | 138 | 150 | | 5 | 6.5 | 0 |
| 46 FT | 33 | 35 | 13 | 9 | 6 | 6 | 6.5 | 46.4 | 57.3 | 61.5 | 65.9 | | 9 | 6.5 | 6 | 6.5 | 40.5 | 127 | 139 | 151 | | 5 | 6.5 | 0 |
| 48 FT | 34 | 36 | 13 | 9 | 6 | 6 | 6.5 | 46.4 | 59.6 | 64.0 | 68.5 | | 9 | 6.5 | 6 | 6.5 | 40.5 | 128 | 140 | 152 | | 5 | 6.5 | 0 |
| 50 FT | 35 | 36 | 13 | 9 | 6 | 6 | 6.5 | 46.4 | 60.0 | 64.4 | 68.9 | | 9 | 6.5 | 6 | 6 | 40.5 | 128 | 140 | 152 | | 5 | 6 | 0 |

## SPAN (S) = 15 FT  HEIGHT (HT) = 14 FT OR 15 FT OR 16 FT

| DESIGN FILL | MEMBER THICKNESS | | | TOP SLAB BARS | | | | | | | | | BOTTOM SLAB BARS | | | | | | | | | WALL BARS | | |
|---|---|---|---|---|---|---|---|---|---|---|---|---|---|---|---|---|---|---|---|---|---|---|---|---|
| | | | | A1 BARS | | J3 BARS | | | | | | | A2 BARS | | J4 BARS | | | | | | | B2 BARS | | |
| | TS | BS | TX | SIZE | SPA. | SIZE | SPA. | C1 | K2 | | | | SIZE | SPA. | SIZE | SPA. | C4 | K3 | | | | SIZE | SPA. | G1 |
| | | | | | | | | | HT=14' | HT=15' | HT=16' | | | | | | | HT=14' | HT=15' | HT=16' | | | | |
| 1 FT | 13 | 14 | 11 | 7 | 8 | 6 | 7.5 | 112.8 | 36.1 | 38.4 | 40.6 | | 7 | 8 | 6 | 7 | 112.8 | 178 | 190 | 202 | | 5 | 7.5 | 12 |
| 2 FT | 13 | 14 | 11 | 7 | 7.5 | 6 | 6.5 | 112.8 | 38.0 | 40.4 | 42.8 | | 7 | 7.5 | 6 | 6.5 | 112.8 | 178 | 190 | 202 | | 5 | 7 | 12 |
| 4 FT | 12 | 13 | 11 | 7 | 7 | 6 | 6.5 | 112.8 | 37.6 | 40.0 | 42.4 | | 7 | 7 | 6 | 6 | 112.8 | 177 | 189 | 201 | | 5 | 6.5 | 0 |
| 6 FT | 12 | 13 | 12 | 7 | 7.5 | 6 | 6.5 | 92.1 | 37.6 | 40.0 | 42.4 | | 7 | 6.5 | 6 | 6 | 97.9 | 177 | 189 | 201 | | 5 | 6.5 | 0 |
| 8 FT | 12 | 14 | 13 | 7 | 7.5 | 6 | 6 | 77.3 | 37.8 | 40.3 | 42.6 | | 7 | 6.5 | 6 | 6 | 84.9 | 178 | 190 | 202 | | 5 | 6.5 | 0 |
| 10 FT | 13 | 15 | 13 | 7 | 6.5 | 6 | 6 | 73.4 | 38.3 | 40.6 | 43.0 | | 7 | 6 | 6 | 6 | 81.0 | 179 | 191 | 203 | | 5 | 6.5 | 0 |
| 12 FT | 14 | 16 | 14 | 7 | 6.5 | 7 | 8 | 73.8 | 38.6 | 41.0 | 43.4 | | 8 | 7.5 | 6 | 6 | 75.6 | 180 | 192 | 204 | | 5 | 6 | 0 |
| 14 FT | 15 | 17 | 14 | 7 | 6 | 7 | 7 | 81.5 | 41.0 | 43.5 | 46.0 | | 8 | 7 | 7 | 7.5 | 75.6 | 181 | 193 | 205 | | 5 | 6 | 0 |
| 16 FT | 16 | 18 | 15 | 8 | 7.5 | 7 | 7 | 80.0 | 45.3 | 48.1 | 50.9 | | 8 | 7 | 7 | 7 | 74.1 | 182 | 194 | 206 | | 6 | 8 | 0 |
| 18 FT | 16 | 19 | 15 | 8 | 7 | 7 | 7 | 74.1 | 41.6 | 44.1 | 46.6 | | 8 | 7 | 7 | 7.5 | 70.3 | 183 | 195 | 207 | | 6 | 8 | 0 |
| 20 FT | 17 | 20 | 15 | 8 | 7 | 7 | 6 | 74.1 | 46.0 | 48.8 | 51.5 | | 8 | 6.5 | 7 | 7 | 68.3 | 184 | 196 | 208 | | 6 | 8 | 0 |
| 22 FT | 19 | 21 | 15 | 8 | 6.5 | 7 | 6 | 74.1 | 50.8 | 53.8 | 56.8 | | 8 | 6 | 7 | 6 | 68.3 | 185 | 197 | 209 | | 6 | 8 | 0 |
| 24 FT | 20 | 23 | 16 | 8 | 6.5 | 7 | 6 | 74.5 | 47.4 | 50.1 | 52.9 | | 8 | 6 | 7 | 6.5 | 68.6 | 187 | 199 | 211 | | 6 | 8 | 0 |
| 26 FT | 21 | 24 | 17 | 8 | 6 | 7 | 6 | 72.9 | 49.9 | 52.8 | 55.6 | | 8 | 6 | 7 | 7 | 69.0 | 188 | 200 | 212 | | 6 | 7.5 | 0 |
| 28 FT | 23 | 25 | 17 | 8 | 6 | 7 | 6 | 72.9 | 54.9 | 58.0 | 61.1 | | 8 | 6 | 7 | 6 | 69.0 | 189 | 201 | 213 | | 6 | 7.5 | 0 |
| 30 FT | 24 | 27 | 18 | 8 | 6 | 7 | 6 | 73.3 | 51.4 | 54.3 | 57.1 | | 8 | 6 | 7 | 6.5 | 69.3 | 191 | 203 | 215 | | 6 | 7 | 0 |
| 32 FT | 25 | 28 | 19 | 8 | 6 | 7 | 6 | 73.6 | 49.6 | 52.5 | 55.3 | | 8 | 6 | 7 | 7 | 69.6 | 192 | 204 | 216 | | 6 | 6.5 | 0 |
| 34 FT | 26 | 29 | 20 | 8 | 6 | 7 | 6 | 74.0 | 52.4 | 55.3 | 58.1 | | 9 | 7.5 | 7 | 7 | 68.0 | 193 | 205 | 217 | | 6 | 6.5 | 0 |
| 36 FT | 27 | 30 | 21 | 9 | 7.5 | 7 | 6 | 74.4 | 52.8 | 55.6 | 58.5 | | 9 | 7 | 7 | 7.5 | 68.4 | 194 | 206 | 218 | | 6 | 6.5 | 0 |
| 38 FT | 28 | 31 | 21 | 9 | 7 | 7 | 6 | 74.4 | 55.5 | 58.5 | 61.5 | | 9 | 7 | 7 | 7 | 68.4 | 195 | 207 | 219 | | 6 | 6 | 0 |
| 40 FT | 29 | 32 | 22 | 9 | 7 | 7 | 6 | 74.8 | 60.5 | 63.8 | 67.0 | | 9 | 7 | 7 | 7 | 68.6 | 196 | 208 | 220 | | 6 | 6 | 0 |
| 42 FT | 30 | 33 | 23 | 9 | 7 | 7 | 6 | 77.1 | 61.0 | 64.3 | 67.5 | | 9 | 7 | 7 | 7 | 69.0 | 197 | 209 | 221 | | 6 | 6 | 0 |
| 44 FT | 31 | 34 | 24 | 9 | 6.5 | 7 | 6 | 77.5 | 61.5 | 64.8 | 68.0 | | 9 | 6.5 | 7 | 7 | 69.4 | 198 | 210 | 222 | | 6 | 6 | 0 |
| 46 FT | 32 | 35 | 24 | 9 | 6.5 | 7 | 6 | 77.5 | 62.1 | 65.4 | 68.6 | | 9 | 6.5 | 7 | 7 | 69.4 | 199 | 211 | 223 | | 7 | 8 | 0 |
| 48 FT | 33 | 36 | 25 | 9 | 6.5 | 7 | 6 | 77.9 | 65.0 | 68.4 | 71.6 | | 9 | 6.5 | 7 | 7 | 69.8 | 200 | 212 | 224 | | 7 | 8 | 0 |
| 50 FT | 34 | 37 | 25 | 9 | 6.5 | 7 | 6 | 77.9 | 65.5 | 68.9 | 72.3 | | 9 | 6.5 | 7 | 7 | 71.8 | 201 | 213 | 225 | | 7 | 7.5 | 0 |

## SPAN (S) = 15 FT  HEIGHT (HT) = 11 FT OR 12 FT OR 13 FT

| DESIGN FILL | MEMBER THICKNESS | | | TOP SLAB BARS | | | | | | | | | BOTTOM SLAB BARS | | | | | | | | | WALL BARS | | |
|---|---|---|---|---|---|---|---|---|---|---|---|---|---|---|---|---|---|---|---|---|---|---|---|---|
| | | | | A1 BARS | | J3 BARS | | | | | | | A2 BARS | | J4 BARS | | | | | | | B2 BARS | | |
| | TS | BS | TX | SIZE | SPA. | SIZE | SPA. | C1 | K2 | | | | SIZE | SPA. | SIZE | SPA. | C4 | K3 | | | | SIZE | SPA. | G1 |
| | | | | | | | | | HT=11' | HT=12' | HT=13' | | | | | | | HT=11' | HT=12' | HT=13' | | | | |
| 1 FT | 12 | 12 | 9 | 7 | 7 | 6 | 6.5 | 109.6 | 36.3 | 39.1 | 42.0 | | 7 | 7 | 6 | 6 | 109.6 | 140 | 152 | 164 | | 5 | 8.5 | 12 |
| 2 FT | 13 | 14 | 9 | 7 | 7 | 6 | 6.5 | 109.6 | 38.5 | 41.5 | 44.5 | | 7 | 7.5 | 6 | 6 | 109.6 | 142 | 154 | 166 | | 5 | 8.5 | 12 |
| 4 FT | 11 | 12 | 10 | 7 | 6.5 | 6 | 6 | 74.1 | 36.0 | 38.9 | 41.8 | | 7 | 7 | 6 | 6 | 76.0 | 140 | 152 | 164 | | 5 | 8 | 0 |
| 6 FT | 12 | 13 | 10 | 7 | 7 | 6 | 6.5 | 64.6 | 36.5 | 39.4 | 42.3 | | 7 | 6.5 | 6 | 6.5 | 68.4 | 141 | 153 | 165 | | 5 | 8 | 0 |
| 8 FT | 12 | 13 | 10 | 7 | 6.5 | 6 | 6 | 58.9 | 36.5 | 39.4 | 42.3 | | 7 | 6 | 6 | 6 | 62.8 | 141 | 153 | 165 | | 5 | 8 | 0 |
| 10 FT | 13 | 14 | 10 | 7 | 6 | 7 | 7 | 58.9 | 38.5 | 41.5 | 44.5 | | 8 | 7 | 6 | 6 | 58.9 | 142 | 154 | 166 | | 5 | 8 | 0 |
| 12 FT | 13 | 15 | 10 | 8 | 7 | 7 | 6 | 57.0 | 38.8 | 41.8 | 44.8 | | 8 | 6.5 | 7 | 6.5 | 58.9 | 143 | 155 | 167 | | 5 | 8 | 0 |
| 14 FT | 14 | 17 | 11 | 8 | 7 | 7 | 6.5 | 57.3 | 39.5 | 42.5 | 45.5 | | 8 | 6.5 | 6 | 6 | 53.5 | 145 | 157 | 169 | | 5 | 7.5 | 0 |
| 16 FT | 14 | 17 | 11 | 8 | 6.5 | 7 | 6 | 53.5 | 39.5 | 42.5 | 45.5 | | 8 | 6.5 | 6 | 6 | 49.6 | 145 | 157 | 169 | | 5 | 8.5 | 0 |
| 18 FT | 16 | 19 | 12 | 8 | 6.5 | 7 | 7 | 61.5 | 40.5 | 43.5 | 46.5 | | 8 | 6.5 | 6 | 6.5 | 49.9 | 147 | 159 | 171 | | 5 | 8.5 | 0 |
| 20 FT | 17 | 20 | 12 | 8 | 6 | 7 | 6 | 61.5 | 41.0 | 44.0 | 47.0 | | 8 | 6.5 | 6 | 6 | 49.9 | 148 | 160 | 172 | | 5 | 7.5 | 0 |
| 22 FT | 19 | 22 | 13 | 8 | 6.5 | 7 | 7 | 61.8 | 43.6 | 46.8 | 49.9 | | 8 | 6.5 | 6 | 6.5 | 50.1 | 150 | 162 | 174 | | 5 | 7.5 | 0 |
| 24 FT | 20 | 23 | 13 | 8 | 6 | 7 | 6.5 | 59.9 | 44.3 | 47.4 | 50.5 | | 8 | 6 | 6 | 6 | 50.1 | 151 | 163 | 175 | | 5 | 6.5 | 0 |
| 26 FT | 21 | 24 | 14 | 8 | 6 | 7 | 6 | 62.1 | 46.5 | 49.6 | 52.9 | | 8 | 6 | 6 | 6.5 | 50.5 | 152 | 164 | 176 | | 5 | 7 | 0 |
| 28 FT | 23 | 25 | 14 | 8 | 6 | 7 | 7 | 60.1 | 47.3 | 50.5 | 53.8 | | 8 | 6 | 6 | 6 | 50.5 | 153 | 165 | 177 | | 5 | 6 | 0 |
| 30 FT | 24 | 27 | 15 | 9 | 7.5 | 7 | 7 | 60.5 | 48.0 | 51.3 | 54.5 | | 8 | 6 | 6 | 6.5 | 50.8 | 155 | 167 | 179 | | 5 | 6 | 0 |
| 32 FT | 25 | 28 | 15 | 9 | 7 | 7 | 6.5 | 60.5 | 50.4 | 53.8 | 57.1 | | 8 | 6 | 6 | 6 | 50.8 | 156 | 168 | 180 | | 6 | 8 | 0 |
| 34 FT | 26 | 29 | 15 | 9 | 7 | 7 | 6 | 60.5 | 51.0 | 54.4 | 57.6 | | 9 | 7.5 | 6 | 6 | 50.8 | 157 | 169 | 181 | | 6 | 8 | 0 |
| 36 FT | 27 | 30 | 16 | 9 | 7 | 7 | 6 | 60.8 | 51.5 | 54.9 | 58.3 | | 9 | 7 | 6 | 6 | 51.0 | 158 | 170 | 182 | | 6 | 8 | 0 |
| 38 FT | 28 | 31 | 16 | 9 | 6.5 | 7 | 6 | 60.8 | 52.1 | 55.5 | 58.8 | | 9 | 7 | 6 | 6 | 51.0 | 159 | 171 | 183 | | 6 | 8 | 0 |
| 40 FT | 29 | 32 | 17 | 9 | 6.5 | 7 | 6 | 61.1 | 54.5 | 58.0 | 61.5 | | 9 | 7 | 6 | 6 | 51.3 | 160 | 172 | 184 | | 6 | 7.5 | 0 |
| 42 FT | 31 | 33 | 17 | 9 | 6.5 | 7 | 7 | 61.1 | 55.4 | 58.9 | 62.4 | | 9 | 7 | 6 | 6 | 51.3 | 161 | 173 | 185 | | 6 | 7.5 | 0 |
| 44 FT | 32 | 34 | 17 | 9 | 6.5 | 7 | 6.5 | 61.1 | 57.9 | 61.5 | 65.1 | | 9 | 6.5 | 6 | 6 | 51.3 | 162 | 174 | 186 | | 6 | 7.5 | 0 |
| 46 FT | 33 | 35 | 17 | 9 | 6 | 7 | 6 | 61.1 | 58.5 | 62.1 | 65.8 | | 9 | 6.5 | 6 | 6 | 53.3 | 163 | 175 | 187 | | 6 | 7.5 | 0 |
| 48 FT | 34 | 36 | 18 | 9 | 6 | 7 | 7 | 61.4 | 59.1 | 62.8 | 66.3 | | 9 | 6.5 | 6 | 6 | 53.5 | 164 | 176 | 188 | | 6 | 7 | 0 |
| 50 FT | 34 | 37 | 18 | 9 | 6 | 7 | 6 | 61.4 | 59.4 | 63.0 | 66.6 | | 9 | 6.5 | 6 | 6 | 53.5 | 165 | 177 | 189 | | 6 | 7 | 0 |

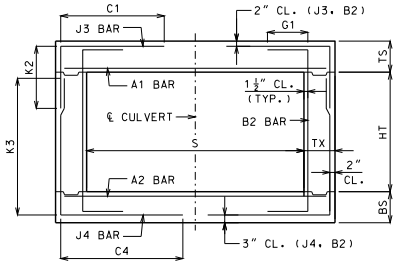


BAR DIMENSIONS DIAGRAM
SYMMETRICAL ABOUT ℄ CULVERT.

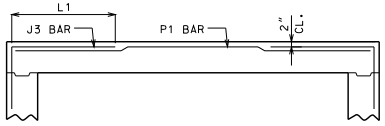


ALTERNATE J3 BAR

AT CONTRACTOR'S OPTION, ALTERNATE J3 BARS MAY BE USED WHEN THE DISTANCE BETWEEN THE ENDS OF J3 BARS IN THE TOP SLAB IS LESS THAN 2'-0". DIMENSION L1 (NOT C1) SHALL BE USED WITH ALTERNATE J3 BARS. WHERE L1 IS EQUAL TO 18", 22" AND 28" FOR #4, #5 AND #6 BARS, RESPECTIVELY. ADDITIONAL P1 BARS ARE REQUIRED WITH ALTERNATE J3 BARS WITH A LENGTH EQUAL TO A1 BARS, AND SIZE AND SPACING EQUAL TO J3 BARS. NO ADDITIONAL PAYMENT WILL BE MADE FOR THIS SUBSTITUTION.

GENERAL NOTES:

IF DESIGN FILL IS BETWEEN TABULATED DESIGN FILLS, USE THE NEXT GREATER TABULATED DESIGN FILL, EXCEPT FOR DESIGN FILLS BETWEEN 2 FEET AND 4 FEET. FOR DESIGN FILLS BETWEEN 2 FEET AND 4 FEET USE THE GREATER MEMBER THICKNESS, AREA OF REINFORCEMENT AND BAR DIMENSIONS FROM THE 2 FEET AND 4 FEET TABULATED DESIGN FILLS. AREA OF REINFORCEMENT EQUALS BAR AREA PER FOOT SPACING.

SPECIAL DESIGNS ARE REQUIRED WHEN THE DESIGN FILL IS LESS THAN 1 FOOT OR GREATER THAN 50 FEET.

DIMENSIONS ARE IN INCHES UNLESS OTHERWISE SPECIFIED.

DESIGN FILLS ARE MEASURED FROM THE TOP OF TOP SLAB TO THE TOP OF EARTH FILL OR ROADWAY.

CULVERTS MEET STRENGTH AND SERVICEABILITY REQUIREMENTS FOR THE DESIGN VEHICULAR LIVE LOAD HL-93 MINUS THE LANE LOAD.


MISSOURI HIGHWAYS AND TRANSPORTATION COMMISSION
105 WEST CAPITOL
JEFFERSON CITY, MO 65102
1-888-ASK-MODOT (1-888-275-6636)


DENNIS W. HECKMAN NUMBER PE-27141 STATE OF MISSOURI PROFESSIONAL ENGINEER
THIS SHEET HAS BEEN SIGNED, SEALED AND DATED ELECTRONICALLY.

# CONCRETE SINGLE BOX CULVERT

MEMBER THICKNESS
BAR SIZE, SPACING & DIMENSIONS

SPAN (S): 15 FEET
HEIGHT (HT): 8 THRU 16 FEET

DATE EFFECTIVE: 04/01/2011
DATE PREPARED: 4/18/2011

703.17

SHEET NO.
13 OF 14

IF A SEAL IS PRESENT ON THIS SHEET IT HAS BEEN ELECTRONICALLY SEALED AND DATED.

SPAN (S) = 16 FT  HEIGHT (HT) = 8 FT OR 9 FT OR 10 FT

| DESIGN FILL | MEMBER THICKNESS | | | TOP SLAB BARS | | | | | | | | | BOTTOM SLAB BARS | | | | | | | | | WALL BARS | | |
|---|---|---|---|---|---|---|---|---|---|---|---|---|---|---|---|---|---|---|---|---|---|---|---|---|
| | | | | A1 BARS | | J3 BARS | | | | | | | A2 BARS | | J4 BARS | | | | | | | B2 BARS | | |
| | TS | BS | TX | SIZE | SPA. | SIZE | SPA. | C1 | K2 HT=8' | K2 HT=9' | K2 HT=10' | | SIZE | SPA. | SIZE | SPA. | C4 | K3 HT=8' | K3 HT=9' | K3 HT=10' | | SIZE | SPA. | G1 |
| 1 FT | 12 | 13 | 8 | 7 | 6.5 | 6 | 6.5 | 116.0 | 37.1 | 41.0 | 44.8 | | 7 | 7.5 | 6 | 6.5 | 76.0 | 105 | 117 | 129 | | 5 | 12 | 12 |
| 2 FT | 12 | 13 | 8 | 7 | 6 | 6 | 6 | 116.0 | 37.1 | 41.0 | 44.8 | | 7 | 7 | 6 | 6 | 64.0 | 105 | 117 | 129 | | 5 | 12 | 12 |
| 4 FT | 12 | 12 | 9 | 7 | 6.5 | 6 | 6.5 | 54.3 | 36.8 | 40.6 | 44.5 | | 7 | 6.5 | 6 | 6 | 54.3 | 104 | 116 | 128 | | 5 | 12 | 0 |
| 6 FT | 12 | 12 | 9 | 7 | 6 | 6 | 6.5 | 50.3 | 36.8 | 40.6 | 44.5 | | 7 | 6 | 6 | 6 | 50.3 | 104 | 116 | 128 | | 5 | 12 | 0 |
| 8 FT | 12 | 13 | 9 | 8 | 7.5 | 7 | 6.5 | 50.3 | 37.1 | 41.0 | 44.8 | | 8 | 7 | 6 | 6 | 46.3 | 105 | 117 | 129 | | 5 | 12 | 0 |
| 10 FT | 13 | 14 | 9 | 8 | 6.5 | 7 | 6.5 | 48.3 | 37.8 | 41.6 | 45.5 | | 8 | 6.5 | 6 | 6 | 44.3 | 106 | 118 | 130 | | 5 | 12 | 0 |
| 12 FT | 14 | 16 | 9 | 8 | 6.5 | 7 | 6.5 | 46.3 | 35.1 | 38.6 | 42.0 | | 8 | 6.5 | 6 | 7.5 | 40.3 | 108 | 120 | 132 | | 5 | 12 | 0 |
| 14 FT | 15 | 18 | 9 | 8 | 6 | 7 | 6 | 52.3 | 36.0 | 39.5 | 42.9 | | 8 | 6 | 6 | 8 | 38.3 | 110 | 122 | 134 | | 5 | 12 | 0 |
| 16 FT | 16 | 19 | 9 | 9 | 7 | 7 | 6 | 50.3 | 36.5 | 40.0 | 43.5 | | 8 | 6 | 6 | 7.5 | 38.3 | 111 | 123 | 135 | | 5 | 12 | 0 |
| 18 FT | 17 | 20 | 9 | 9 | 7 | 7 | 6.5 | 50.3 | 37.1 | 40.6 | 44.1 | | 8 | 6 | 6 | 8 | 38.3 | 112 | 124 | 136 | | 5 | 12 | 0 |
| 20 FT | 19 | 21 | 9 | 9 | 7 | 7 | 7 | 50.3 | 39.3 | 42.9 | 46.5 | | 8 | 6 | 6 | 7.5 | 38.3 | 113 | 125 | 137 | | 5 | 10.5 | 0 |
| 22 FT | 20 | 23 | 9 | 9 | 6.5 | 7 | 6.5 | 50.3 | 40.3 | 43.8 | 47.4 | | 8 | 6 | 6 | 7.5 | 38.3 | 115 | 127 | 139 | | 5 | 9 | 0 |
| 24 FT | 22 | 24 | 10 | 9 | 7 | 7 | 7.5 | 50.5 | 42.5 | 46.3 | 49.9 | | 9 | 7.5 | 6 | 7.5 | 38.4 | 116 | 128 | 140 | | 5 | 9.5 | 0 |
| 26 FT | 23 | 25 | 10 | 9 | 6.5 | 7 | 7 | 50.5 | 47.3 | 51.4 | 55.4 | | 9 | 7 | 6 | 7 | 38.4 | 117 | 129 | 141 | | 5 | 8.5 | 0 |
| 28 FT | 25 | 27 | 11 | 9 | 6.5 | 6 | 6 | 46.8 | 45.8 | 49.6 | 53.5 | | 9 | 7 | 6 | 8 | 40.6 | 119 | 131 | 143 | | 5 | 8.5 | 0 |
| 30 FT | 26 | 28 | 11 | 9 | 6.5 | 6 | 6 | 46.8 | 46.4 | 50.3 | 54.1 | | 9 | 7 | 6 | 8 | 40.6 | 120 | 132 | 144 | | 5 | 7.5 | 0 |
| 32 FT | 28 | 29 | 11 | 9 | 6.5 | 6 | 6.5 | 46.8 | 53.3 | 57.6 | 61.9 | | 9 | 7 | 6 | 7 | 40.6 | 121 | 133 | 145 | | 5 | 7.5 | 0 |
| 34 FT | 29 | 31 | 12 | 9 | 6.5 | 6 | 6.5 | 46.9 | 54.4 | 58.6 | 63.0 | | 9 | 7 | 6 | 7.5 | 40.8 | 123 | 135 | 147 | | 5 | 7 | 0 |
| 36 FT | 30 | 32 | 12 | 9 | 6 | 6 | 6.5 | 46.9 | 55.1 | 59.4 | 63.8 | | 9 | 6.5 | 6 | 7.5 | 40.8 | 124 | 136 | 148 | | 5 | 7 | 0 |
| 38 FT | 31 | 33 | 12 | 9 | 6 | 6 | 6.5 | 46.9 | 55.8 | 60.1 | 64.5 | | 9 | 6.5 | 6 | 7 | 40.8 | 125 | 137 | 149 | | 5 | 7 | 0 |
| 40 FT | 32 | 34 | 12 | 9 | 6 | 6 | 6.5 | 46.9 | 56.5 | 60.9 | 65.1 | | 9 | 6.5 | 6 | 7 | 40.8 | 126 | 138 | 150 | | 5 | 7 | 0 |
| 42 FT | 33 | 35 | 12 | 9 | 6 | 6 | 6 | 46.9 | 57.3 | 61.5 | 65.9 | | 9 | 6.5 | 6 | 6.5 | 40.8 | 127 | 139 | 151 | | 5 | 6.5 | 0 |
| 44 FT | 34 | 36 | 13 | 10 | 7.5 | 6 | 6.5 | 47.1 | 59.6 | 64.0 | 68.5 | | 9 | 6 | 6 | 6.5 | 41.0 | 128 | 140 | 152 | | 5 | 6.5 | 0 |
| 46 FT | 35 | 37 | 13 | 10 | 7 | 6 | 6 | 47.1 | 60.3 | 64.8 | 69.3 | | 9 | 6 | 6 | 6.5 | 41.0 | 129 | 141 | 153 | | 5 | 6.5 | 0 |
| 48 FT | 36 | 38 | 13 | 10 | 7 | 6 | 6.5 | 47.1 | 61.0 | 65.5 | 69.9 | | 9 | 6 | 6 | 6 | 41.0 | 130 | 142 | 154 | | 5 | 6 | 0 |
| 50 FT | 37 | 39 | 13 | 10 | 7 | 6 | 6 | 47.1 | 61.8 | 66.3 | 70.6 | | 9 | 6 | 6 | 6 | 41.0 | 131 | 143 | 155 | | 6 | 8.5 | 0 |

SPAN (S) = 16 FT  HEIGHT (HT) = 14 FT OR 15 FT OR 16 FT

| DESIGN FILL | MEMBER THICKNESS | | | TOP SLAB BARS | | | | | | | | | BOTTOM SLAB BARS | | | | | | | | | WALL BARS | | |
|---|---|---|---|---|---|---|---|---|---|---|---|---|---|---|---|---|---|---|---|---|---|---|---|---|
| | | | | A1 BARS | | J3 BARS | | | | | | | A2 BARS | | J4 BARS | | | | | | | B2 BARS | | |
| | TS | BS | TX | SIZE | SPA. | SIZE | SPA. | C1 | K2 HT=14' | K2 HT=15' | K2 HT=16' | | SIZE | SPA. | SIZE | SPA. | C4 | K3 HT=14' | K3 HT=15' | K3 HT=16' | | SIZE | SPA. | G1 |
| 1 FT | 13 | 14 | 11 | 7 | 7.5 | 6 | 7 | 117.8 | 38.0 | 40.4 | 42.8 | | 7 | 7.5 | 6 | 6.5 | 117.8 | 178 | 190 | 202 | | 5 | 7.5 | 12 |
| 2 FT | 13 | 14 | 11 | 7 | 7 | 7 | 7.5 | 121.8 | 38.0 | 40.4 | 42.8 | | 7 | 7 | 6 | 6.5 | 117.8 | 178 | 190 | 202 | | 5 | 7 | 12 |
| 4 FT | 12 | 14 | 11 | 7 | 6.5 | 6 | 6 | 117.8 | 37.8 | 40.3 | 42.6 | | 7 | 6.5 | 6 | 6 | 117.8 | 178 | 190 | 202 | | 5 | 6.5 | 0 |
| 6 FT | 12 | 14 | 12 | 7 | 6.5 | 6 | 6 | 83.6 | 37.8 | 40.3 | 42.6 | | 7 | 6.5 | 6 | 6 | 95.9 | 178 | 190 | 202 | | 5 | 7 | 0 |
| 8 FT | 12 | 14 | 13 | 7 | 6.5 | 7 | 6.5 | 77.9 | 37.8 | 40.3 | 42.6 | | 7 | 6 | 6 | 6 | 80.0 | 178 | 190 | 202 | | 5 | 6.5 | 0 |
| 10 FT | 13 | 16 | 13 | 7 | 6 | 7 | 6.5 | 75.9 | 38.4 | 40.8 | 43.3 | | 8 | 7.5 | 6 | 6 | 77.9 | 180 | 192 | 204 | | 5 | 6.5 | 0 |
| 12 FT | 14 | 17 | 14 | 7 | 6 | 7 | 6.5 | 72.1 | 40.8 | 43.3 | 45.8 | | 8 | 7 | 7 | 8 | 76.3 | 181 | 193 | 205 | | 5 | 6 | 0 |
| 14 FT | 16 | 18 | 14 | 8 | 7 | 7 | 6.5 | 78.3 | 45.3 | 48.1 | 50.9 | | 8 | 6.5 | 7 | 7 | 74.1 | 182 | 194 | 206 | | 5 | 6 | 0 |
| 16 FT | 17 | 19 | 15 | 8 | 7 | 7 | 6.5 | 78.6 | 47.8 | 50.6 | 53.5 | | 8 | 6.5 | 7 | 6.5 | 72.5 | 183 | 195 | 207 | | 6 | 8 | 0 |
| 18 FT | 17 | 20 | 15 | 8 | 6.5 | 7 | 6.5 | 72.5 | 42.0 | 44.5 | 47.0 | | 8 | 6 | 7 | 7.5 | 66.3 | 184 | 196 | 208 | | 6 | 8 | 0 |
| 20 FT | 19 | 21 | 15 | 8 | 6.5 | 7 | 6 | 72.5 | 50.8 | 53.8 | 56.8 | | 8 | 6 | 7 | 6.5 | 66.3 | 185 | 197 | 209 | | 6 | 8 | 0 |
| 22 FT | 20 | 23 | 16 | 8 | 6 | 7 | 6 | 72.8 | 45.4 | 48.0 | 50.6 | | 8 | 6 | 7 | 7 | 66.5 | 187 | 199 | 211 | | 6 | 8 | 0 |
| 24 FT | 22 | 24 | 16 | 8 | 6 | 7 | 6 | 72.8 | 52.3 | 55.3 | 58.3 | | 9 | 7.5 | 7 | 6.5 | 66.5 | 188 | 200 | 212 | | 6 | 8 | 0 |
| 26 FT | 23 | 26 | 17 | 8 | 6 | 7 | 6 | 73.1 | 50.9 | 53.8 | 56.6 | | 9 | 7.5 | 7 | 7 | 66.9 | 190 | 202 | 214 | | 6 | 7.5 | 0 |
| 28 FT | 24 | 27 | 18 | 9 | 7 | 7 | 6 | 73.5 | 51.4 | 54.3 | 57.1 | | 9 | 7 | 7 | 7 | 67.3 | 191 | 203 | 215 | | 6 | 7 | 0 |
| 30 FT | 26 | 28 | 18 | 9 | 7 | 7 | 6 | 73.5 | 56.4 | 59.5 | 62.6 | | 9 | 7 | 7 | 6.5 | 67.3 | 192 | 204 | 216 | | 6 | 7 | 0 |
| 32 FT | 27 | 30 | 19 | 9 | 7 | 7 | 6 | 73.9 | 55.0 | 58.0 | 61.0 | | 9 | 7 | 7 | 7 | 67.5 | 194 | 206 | 218 | | 6 | 6.5 | 0 |
| 34 FT | 28 | 31 | 20 | 9 | 7 | 7 | 6 | 74.3 | 55.5 | 58.5 | 61.5 | | 9 | 7 | 7 | 7 | 67.9 | 195 | 207 | 219 | | 6 | 6.5 | 0 |
| 36 FT | 29 | 32 | 21 | 9 | 6.5 | 7 | 6 | 74.5 | 53.8 | 56.6 | 59.5 | | 9 | 6.5 | 7 | 7 | 68.1 | 196 | 208 | 220 | | 6 | 6.5 | 0 |
| 38 FT | 30 | 33 | 22 | 9 | 6.5 | 7 | 6 | 74.9 | 61.0 | 64.3 | 67.5 | | 9 | 6.5 | 7 | 7 | 68.5 | 197 | 209 | 221 | | 6 | 6.5 | 0 |
| 40 FT | 31 | 34 | 22 | 9 | 6.5 | 7 | 6 | 74.9 | 61.5 | 64.8 | 68.0 | | 9 | 6.5 | 7 | 7 | 68.5 | 198 | 210 | 222 | | 6 | 6 | 0 |
| 42 FT | 32 | 35 | 23 | 9 | 6.5 | 7 | 6 | 75.3 | 62.1 | 65.4 | 68.6 | | 9 | 6.5 | 7 | 7 | 68.8 | 199 | 211 | 223 | | 6 | 6 | 0 |
| 44 FT | 34 | 36 | 23 | 9 | 6 | 7 | 6 | 75.3 | 65.3 | 68.6 | 72.0 | | 9 | 6 | 7 | 6.5 | 68.8 | 200 | 212 | 224 | | 7 | 8 | 0 |
| 46 FT | 35 | 37 | 24 | 9 | 6 | 7 | 6 | 75.6 | 65.8 | 69.1 | 72.5 | | 9 | 6 | 7 | 6.5 | 69.1 | 201 | 213 | 225 | | 6 | 6 | 0 |
| 48 FT | 36 | 38 | 24 | 9 | 6 | 7 | 6 | 75.6 | 66.4 | 69.8 | 73.1 | | 9 | 6 | 7 | 7 | 69.1 | 202 | 214 | 226 | | 7 | 7.5 | 0 |
| 50 FT | 37 | 39 | 25 | 9 | 6 | 7 | 6 | 76.0 | 69.3 | 72.8 | 76.3 | | 9 | 6 | 7 | 7 | 69.5 | 203 | 215 | 227 | | 7 | 7.5 | 0 |

SPAN (S) = 16 FT  HEIGHT (HT) = 11 FT OR 12 FT OR 13 FT

| DESIGN FILL | MEMBER THICKNESS | | | TOP SLAB BARS | | | | | | | | | BOTTOM SLAB BARS | | | | | | | | | WALL BARS | | |
|---|---|---|---|---|---|---|---|---|---|---|---|---|---|---|---|---|---|---|---|---|---|---|---|---|
| | | | | A1 BARS | | J3 BARS | | | | | | | A2 BARS | | J4 BARS | | | | | | | B2 BARS | | |
| | TS | BS | TX | SIZE | SPA. | SIZE | SPA. | C1 | K2 HT=11' | K2 HT=12' | K2 HT=13' | | SIZE | SPA. | SIZE | SPA. | C4 | K3 HT=11' | K3 HT=12' | K3 HT=13' | | SIZE | SPA. | G1 |
| 1 FT | 12 | 14 | 9 | 7 | 6.5 | 6 | 6 | 116.6 | 36.8 | 39.6 | 42.5 | | 7 | 7.5 | 6 | 6 | 116.6 | 142 | 154 | 166 | | 5 | 8.5 | 12 |
| 2 FT | 13 | 14 | 10 | 7 | 7 | 6 | 7 | 117.1 | 38.5 | 41.5 | 44.5 | | 7 | 7.5 | 6 | 6 | 101.0 | 142 | 154 | 166 | | 5 | 8.5 | 12 |
| 4 FT | 12 | 13 | 10 | 7 | 6.5 | 6 | 6.5 | 72.8 | 36.5 | 39.4 | 42.3 | | 7 | 6.5 | 6 | 6.5 | 74.8 | 141 | 153 | 165 | | 5 | 8.5 | 0 |
| 6 FT | 12 | 13 | 10 | 7 | 6 | 6 | 6 | 62.6 | 36.5 | 39.4 | 42.3 | | 7 | 6 | 6 | 6 | 64.6 | 141 | 153 | 165 | | 5 | 8.5 | 0 |
| 8 FT | 12 | 14 | 10 | 7 | 6 | 7 | 6 | 62.6 | 36.8 | 39.6 | 42.5 | | 8 | 7.5 | 6 | 6 | 60.6 | 142 | 154 | 166 | | 5 | 8.5 | 0 |
| 10 FT | 13 | 15 | 11 | 8 | 7.5 | 7 | 6.5 | 60.9 | 37.3 | 40.1 | 43.0 | | 8 | 7 | 6 | 6.5 | 56.9 | 143 | 155 | 167 | | 5 | 9 | 0 |
| 12 FT | 14 | 16 | 11 | 8 | 6.5 | 7 | 6.5 | 58.9 | 39.3 | 42.3 | 45.3 | | 8 | 6.5 | 6 | 6 | 54.8 | 144 | 156 | 168 | | 5 | 8.5 | 0 |
| 14 FT | 15 | 17 | 11 | 8 | 6 | 7 | 6 | 65.0 | 46.1 | 49.6 | 53.1 | | 8 | 6 | 7 | 7 | 56.9 | 145 | 157 | 169 | | 5 | 8 | 0 |
| 16 FT | 16 | 19 | 12 | 8 | 6 | 7 | 6 | 65.3 | 40.5 | 43.5 | 46.5 | | 8 | 6 | 6 | 6 | 53.0 | 147 | 159 | 171 | | 5 | 8 | 0 |
| 18 FT | 17 | 20 | 12 | 8 | 6 | 7 | 6.5 | 61.3 | 41.0 | 44.0 | 47.0 | | 8 | 6 | 6 | 6.5 | 49.0 | 148 | 160 | 172 | | 5 | 9 | 0 |
| 20 FT | 19 | 21 | 12 | 8 | 6 | 7 | 6.5 | 59.1 | 43.4 | 46.5 | 49.6 | | 8 | 6 | 6 | 6 | 49.0 | 149 | 161 | 173 | | 5 | 7.5 | 0 |
| 22 FT | 20 | 23 | 13 | 9 | 7.5 | 7 | 6.5 | 61.5 | 44.3 | 47.4 | 50.5 | | 8 | 6 | 6 | 6.5 | 49.3 | 151 | 163 | 175 | | 5 | 8 | 0 |
| 24 FT | 22 | 24 | 13 | 9 | 7 | 7 | 6.5 | 59.5 | 46.8 | 50.0 | 53.3 | | 9 | 7.5 | 6 | 6 | 49.3 | 152 | 164 | 176 | | 5 | 6.5 | 0 |
| 26 FT | 23 | 26 | 14 | 9 | 7 | 7 | 6.5 | 59.8 | 47.5 | 50.8 | 54.0 | | 9 | 7.5 | 6 | 6.5 | 49.5 | 154 | 166 | 178 | | 5 | 7 | 0 |
| 28 FT | 24 | 27 | 14 | 9 | 7 | 7 | 6.5 | 59.8 | 48.0 | 51.3 | 54.5 | | 9 | 7 | 6 | 6 | 49.5 | 155 | 167 | 179 | | 5 | 6 | 0 |
| 30 FT | 26 | 28 | 14 | 9 | 6.5 | 7 | 6 | 59.8 | 50.6 | 54.0 | 57.4 | | 9 | 7 | 6 | 6 | 49.5 | 156 | 168 | 180 | | 5 | 6 | 0 |
| 32 FT | 27 | 29 | 15 | 9 | 6.5 | 7 | 6.5 | 60.0 | 51.3 | 54.6 | 58.0 | | 9 | 7 | 6 | 6 | 49.6 | 157 | 169 | 181 | | 5 | 6 | 0 |
| 34 FT | 28 | 31 | 15 | 9 | 6.5 | 7 | 6 | 60.0 | 52.1 | 55.5 | 58.8 | | 9 | 7 | 6 | 6 | 49.6 | 159 | 171 | 183 | | 6 | 8 | 0 |
| 36 FT | 29 | 32 | 16 | 9 | 6.5 | 7 | 6.5 | 60.4 | 54.5 | 58.0 | 61.5 | | 9 | 6.5 | 6 | 6 | 49.9 | 160 | 172 | 184 | | 6 | 8 | 0 |
| 38 FT | 30 | 33 | 16 | 9 | 6 | 7 | 6 | 60.4 | 55.1 | 58.6 | 62.0 | | 9 | 6.5 | 6 | 6 | 49.9 | 161 | 173 | 185 | | 6 | 8 | 0 |
| 40 FT | 32 | 34 | 16 | 9 | 6 | 7 | 6.5 | 60.4 | 57.9 | 61.5 | 65.1 | | 9 | 6.5 | 6 | 6 | 49.9 | 162 | 174 | 186 | | 6 | 8 | 0 |
| 42 FT | 33 | 35 | 17 | 9 | 6 | 7 | 7 | 60.6 | 58.5 | 62.1 | 65.8 | | 9 | 6.5 | 6 | 6 | 50.1 | 163 | 175 | 187 | | 6 | 7.5 | 0 |
| 44 FT | 34 | 36 | 17 | 9 | 6 | 7 | 7 | 60.6 | 59.1 | 62.8 | 66.3 | | 9 | 6 | 6 | 6 | 50.1 | 164 | 176 | 188 | | 6 | 7.5 | 0 |
| 46 FT | 35 | 37 | 17 | 10 | 7.5 | 7 | 6.5 | 60.6 | 59.8 | 63.3 | 66.9 | | 9 | 6 | 6 | 6 | 50.1 | 165 | 177 | 189 | | 6 | 7.5 | 0 |
| 48 FT | 36 | 38 | 18 | 10 | 7 | 7 | 7 | 60.9 | 60.3 | 63.9 | 67.5 | | 9 | 6 | 6 | 6 | 52.5 | 166 | 178 | 190 | | 6 | 7 | 0 |
| 50 FT | 37 | 39 | 18 | 10 | 7 | 7 | 7 | 60.9 | 62.9 | 66.6 | 70.4 | | 9 | 6 | 6 | 6 | 52.5 | 167 | 179 | 191 | | 6 | 7 | 0 |

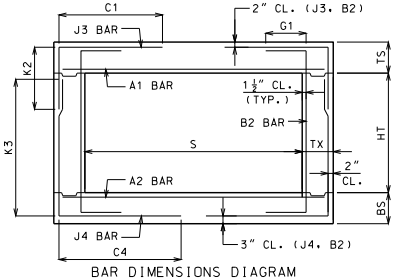


BAR DIMENSIONS DIAGRAM
SYMMETRICAL ABOUT ℄ CULVERT.

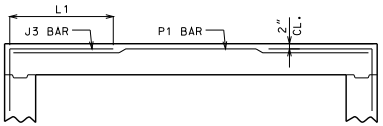


ALTERNATE J3 BAR

AT CONTRACTOR'S OPTION, ALTERNATE J3 BARS MAY BE USED WHEN THE DISTANCE BETWEEN THE ENDS OF J3 BARS IN THE TOP SLAB IS LESS THAN 2'-0". DIMENSION L1 (NOT C1) SHALL BE USED WITH ALTERNATE J3 BARS. WHERE L1 IS EQUAL TO 18", 22" AND 28" FOR #4, #5 AND #6 BARS, RESPECTIVELY. ADDITIONAL P1 BARS ARE REQUIRED WITH ALTERNATE J3 BARS WITH A LENGTH EQUAL TO A1 BARS, AND SIZE AND SPACING EQUAL TO J3 BARS. NO ADDITIONAL PAYMENT WILL BE MADE FOR THIS SUBSTITUTION.

GENERAL NOTES:

IF DESIGN FILL IS BETWEEN TABULATED DESIGN FILLS, USE THE NEXT GREATER TABULATED DESIGN FILL, EXCEPT FOR DESIGN FILLS BETWEEN 2 FEET AND 4 FEET. FOR DESIGN FILLS BETWEEN 2 FEET AND 4 FEET USE THE GREATER MEMBER THICKNESS, AREA OF REINFORCEMENT AND BAR DIMENSIONS FROM THE 2 FEET AND 4 FEET TABULATED DESIGN FILLS. AREA OF REINFORCEMENT EQUALS BAR AREA PER FOOT SPACING.

SPECIAL DESIGNS ARE REQUIRED WHEN THE DESIGN FILL IS LESS THAN 1 FOOT OR GREATER THAN 50 FEET.

DIMENSIONS ARE IN INCHES UNLESS OTHERWISE SPECIFIED.

DESIGN FILLS ARE MEASURED FROM THE TOP OF TOP SLAB TO THE TOP OF EARTH FILL OR ROADWAY.

CULVERTS MEET STRENGTH AND SERVICEABILITY REQUIREMENTS FOR THE DESIGN VEHICULAR LIVE LOAD HL-93 MINUS THE LANE LOAD.


MISSOURI HIGHWAYS AND TRANSPORTATION COMMISSION
105 WEST CAPITOL
JEFFERSON CITY, MO 65102
1-888-ASK-MODOT (1-888-275-6636)


DENNIS W. HECKMAN NUMBER PE-27141 PROFESSIONAL ENGINEER
THIS SHEET HAS BEEN SIGNED, SEALED AND DATED ELECTRONICALLY.

# CONCRETE SINGLE BOX CULVERT

MEMBER THICKNESS
BAR SIZE, SPACING & DIMENSIONS

SPAN (S): 16 FEET
HEIGHT (HT): 8 THRU 16 FEET

DATE EFFECTIVE: 04/01/2011
DATE PREPARED: 4/18/2011

703.17

SHEET NO.
14 OF 14

IF A SEAL IS PRESENT ON THIS SHEET IT HAS BEEN ELECTRONICALLY SEALED AND DATED.

## AREA OF STEEL REQUIRED FOR J5 BARS IN WINGS (SQ. IN./FT.)
## WALL HEIGHT VS. WALL THICKNESS

① Backfill Slope = 2:1

| Wall Thickness TX (in.) | Wall Height (ft.) | | | | | | | | | | | | | | | |
|---|---|---|---|---|---|---|---|---|---|---|---|---|---|---|---|---|
| | 5 | 6 | 7 | 8 | 9 | 10 | 11 | 12 | 13 | 14 | 15 | 16 | 17 | 18 | 19 | 20 |
| 8 | 0.168 | 0.168 | 0.197 | 0.291 | 0.414 | 0.429 | 0.578 | 0.766 | 1.003 | | | | | | | |
| 9 | 0.168 | 0.168 | 0.168 | 0.244 | 0.346 | 0.456 | 0.477 | 0.626 | 0.809 | 1.034 | 1.312 | | | | | |
| 10 | 0.168 | 0.168 | 0.168 | 0.211 | 0.298 | 0.407 | 0.487 | 0.532 | 0.683 | 0.864 | 1.084 | 1.349 | | | | |
| 11 | 0.168 | 0.168 | 0.168 | 0.185 | 0.261 | 0.357 | 0.475 | 0.520 | 0.592 | 0.746 | 0.929 | 1.147 | 1.405 | | | |
| 12 | | 0.168 | 0.168 | 0.168 | 0.233 | 0.318 | 0.422 | 0.548 | 0.554 | 0.658 | 0.816 | 1.002 | 1.220 | 1.475 | | |
| 13 | | 0.168 | 0.168 | 0.168 | 0.210 | 0.287 | 0.380 | 0.493 | 0.588 | 0.589 | 0.729 | 0.892 | 1.081 | 1.301 | | |
| 14 | | | 0.168 | 0.168 | 0.192 | 0.261 | 0.346 | 0.448 | 0.569 | 0.623 | 0.659 | 0.805 | 0.973 | 1.167 | 1.390 | |
| 15 | | | | 0.168 | 0.176 | 0.240 | 0.317 | 0.411 | 0.521 | 0.652 | 0.658 | 0.734 | 0.886 | 1.059 | 1.258 | |
| 16 | | | | | 0.168 | 0.222 | 0.293 | 0.379 | 0.481 | 0.601 | 0.693 | 0.693 | 0.813 | 0.971 | 1.151 | |
| 17 | | | | | 0.168 | 0.206 | 0.273 | 0.352 | 0.447 | 0.557 | 0.686 | 0.729 | 0.752 | 0.897 | 1.061 | 1.247 |
| 18 | | | | | | | 0.255 | 0.329 | 0.417 | 0.520 | 0.639 | 0.764 | 0.764 | 0.834 | 0.985 | 1.156 |
| 19 | | | | | | | | 0.309 | 0.391 | 0.487 | 0.599 | 0.727 | 0.800 | 0.800 | 0.920 | 1.078 |
| 20 | | | | | | | | 0.291 | 0.368 | 0.459 | 0.563 | 0.684 | 0.821 | 0.836 | 0.863 | 1.011 |
| 21 | | | | | | | | | 0.348 | 0.433 | 0.532 | 0.645 | 0.774 | 0.871 | 0.871 | 0.952 |
| 22 | | | | | | | | | | 0.411 | 0.504 | 0.611 | 0.733 | 0.870 | 0.907 | 0.970 |
| 23 | | | | | | | | | | | 0.479 | 0.580 | 0.696 | 0.826 | 0.943 | 0.943 |
| 24 | | | | | | | | | | | 0.456 | 0.552 | 0.662 | 0.786 | 0.925 | 0.979 |
| 25 | | | | | | | | | | | | 0.527 | 0.632 | 0.750 | 0.882 | 1.015 |
| 26 | | | | | | | | | | | | | 0.604 | 0.717 | 0.843 | 0.984 |
| 27 | | | | | | | | | | | | | | 0.686 | 0.807 | 0.942 |

## AREA OF STEEL REQUIRED FOR J5 BARS IN WINGS (SQ. IN./FT.)
## WALL HEIGHT VS. WALL THICKNESS

① Backfill Slope = 3:1

| Wall Thickness TX (in.) | Wall Height (ft.) | | | | | | | | | | | | | | | |
|---|---|---|---|---|---|---|---|---|---|---|---|---|---|---|---|---|
| | 5 | 6 | 7 | 8 | 9 | 10 | 11 | 12 | 13 | 14 | 15 | 16 | 17 | 18 | 19 | 20 |
| 8 | 0.168 | 0.168 | 0.168 | 0.187 | 0.264 | 0.362 | 0.425 | 0.475 | 0.612 | | | | | | | |
| 9 | 0.168 | 0.168 | 0.168 | 0.168 | 0.222 | 0.303 | 0.403 | 0.456 | 0.504 | 0.637 | 0.795 | | | | | |
| 10 | 0.168 | 0.168 | 0.168 | 0.168 | 0.191 | 0.261 | 0.346 | 0.450 | 0.487 | 0.541 | 0.671 | 0.824 | 1.005 | 1.217 | | |
| 11 | 0.168 | 0.168 | 0.168 | 0.168 | 0.168 | 0.229 | 0.304 | 0.394 | 0.501 | 0.520 | 0.583 | 0.713 | 0.864 | 1.039 | | |
| 12 | | 0.168 | 0.168 | 0.168 | 0.168 | 0.204 | 0.271 | 0.351 | 0.445 | 0.554 | 0.554 | 0.629 | 0.760 | 0.910 | | |
| 13 | | 0.168 | 0.168 | 0.168 | 0.168 | 0.185 | 0.244 | 0.316 | 0.401 | 0.501 | 0.588 | 0.588 | 0.679 | 0.812 | 0.963 | |
| 14 | | | 0.168 | 0.168 | 0.168 | 0.168 | 0.223 | 0.288 | 0.365 | 0.455 | 0.560 | 0.623 | 0.623 | 0.733 | 0.868 | |
| 15 | | | | 0.168 | 0.168 | 0.168 | 0.204 | 0.264 | 0.335 | 0.417 | 0.513 | 0.623 | 0.658 | 0.669 | 0.791 | |
| 16 | | | | | 0.168 | 0.168 | 0.189 | 0.244 | 0.309 | 0.385 | 0.474 | 0.575 | 0.690 | 0.693 | 0.727 | |
| 17 | | | | | 0.168 | 0.168 | 0.176 | 0.227 | 0.287 | 0.358 | 0.440 | 0.533 | 0.640 | 0.729 | 0.729 | 0.788 |
| 18 | | | | | | | 0.168 | 0.212 | 0.269 | 0.334 | 0.411 | 0.498 | 0.597 | 0.709 | 0.764 | 0.764 |
| 19 | | | | | | | | 0.199 | 0.252 | 0.314 | 0.385 | 0.467 | 0.559 | 0.664 | 0.782 | 0.800 |
| 20 | | | | | | | | 0.188 | 0.237 | 0.295 | 0.362 | 0.439 | 0.526 | 0.625 | 0.735 | 0.836 |
| 21 | | | | | | | | | 0.224 | 0.279 | 0.342 | 0.415 | 0.497 | 0.590 | 0.694 | 0.810 |
| 22 | | | | | | | | | | 0.265 | 0.325 | 0.393 | 0.471 | 0.558 | 0.657 | 0.766 |
| 23 | | | | | | | | | | | 0.308 | 0.373 | 0.447 | 0.530 | 0.624 | 0.727 |
| 24 | | | | | | | | | | | 0.294 | 0.356 | 0.426 | 0.505 | 0.594 | 0.692 |
| 25 | | | | | | | | | | | | 0.340 | 0.407 | 0.482 | 0.566 | 0.661 |
| 26 | | | | | | | | | | | | | 0.389 | 0.461 | 0.542 | 0.632 |
| 27 | | | | | | | | | | | | | | 0.442 | 0.519 | 0.605 |

NOTE:

THE WALL HEIGHT IS EQUAL TO THE BARREL HEIGHT (HT) PLUS THE TOP SLAB THICKNESS (TS). WHEN WALL HEIGHT IS IN BETWEEN OR OUTSIDE TABULATED WALL HEIGHTS, THE AREA OF STEEL REQUIRED SHOULD BE INTERPOLATED BETWEEN OR EXTRAPOLATED FROM ADJACENT AREAS OF STEEL USING THE ACTUAL WALL HEIGHT.

IF AREA OF STEEL IN THE WALL OF THE CULVERT (J4 BARS) IS GREATER THAN THAT INDICATED IN THE TABLE, USE THE SAME SIZE AND SPACING FOR THE J5 BARS IN THE WINGS. HOWEVER, IF THE AREA OF STEEL PROVIDED BY MATCHING SIZE AND SPACING OF THE J4 BARS IS INSUFFICIENT, INCREASE THE SIZE OF THE J5 BARS (#8 MAX.) AND/OR DECREASE THE SPACING OF THE J5 BARS (6" MIN.). USE SMALLEST BAR SIZE POSSIBLE BASED ON MINIMUM SPACING.

MINIMUM STEEL TO BE USED IN THE WINGS FOR J5 BARS IS #4 BARS AT 14" CENTERS (AREA OF STEEL = 0.1683 SQ. IN./FT.)

① SEE STANDARD PLAN 703.37C, SHEET 2 OF 2 FOR BACKFILL SLOPE TO BE USED BASED ON SKEW.


MISSOURI HIGHWAYS AND TRANSPORTATION COMMISSION
105 WEST CAPITOL
JEFFERSON CITY, MO 65102
1-888-ASK-MODOT (1-888-275-6636)


STATE OF MISSOURI
DENNIS W. HECKMAN
NUMBER PE-27141
PROFESSIONAL ENGINEER
THIS SHEET HAS BEEN SIGNED, SEALED AND DATED ELECTRONICALLY.

# CONCRETE BOX CULVERT

EXTERIOR WING REINFORCEMENT

DATE EFFECTIVE: 04/01/2011
DATE PREPARED: 4/18/2011

703.37C

SHEET NO. 1 OF 2

IF A SEAL IS PRESENT ON THIS SHEET IT HAS BEEN ELECTRONICALLY SEALED AND DATED.

| WING BACKFILL TABLE | | | |
|---|---|---|---|
| WING SKEW (DEGREES) | A (DEGREES) | B TRANSITION ANGLE (DEGREES) | C BACKFILL SLOPE (H:V) |
| <0 | >90 | 65 | >3:1 |
| 0 | 90 | 65 | 3:1 |
| 5 | 85 | 58 | 3:1 |
| 10 | 80 | 51 | 3:1 |
| 15 | 75 | 43 | 3:1 |
| 20 | 70 | 37 | 3:1 |
| 25 | 65 | 29 | 3:1 |
| 30 | 60 | 22 | 3:1 |
| 35 | 55 | 33 | 2:1 |
| 40 | 50 | 28 | 2:1 |
| 45 | 45 | 23 | 2:1 |
| 50 | 40 | 19 | 2:1 |
| 55 | 35 | 14 | 2:1 |
| 60 | 30 | 10 | 2:1 |

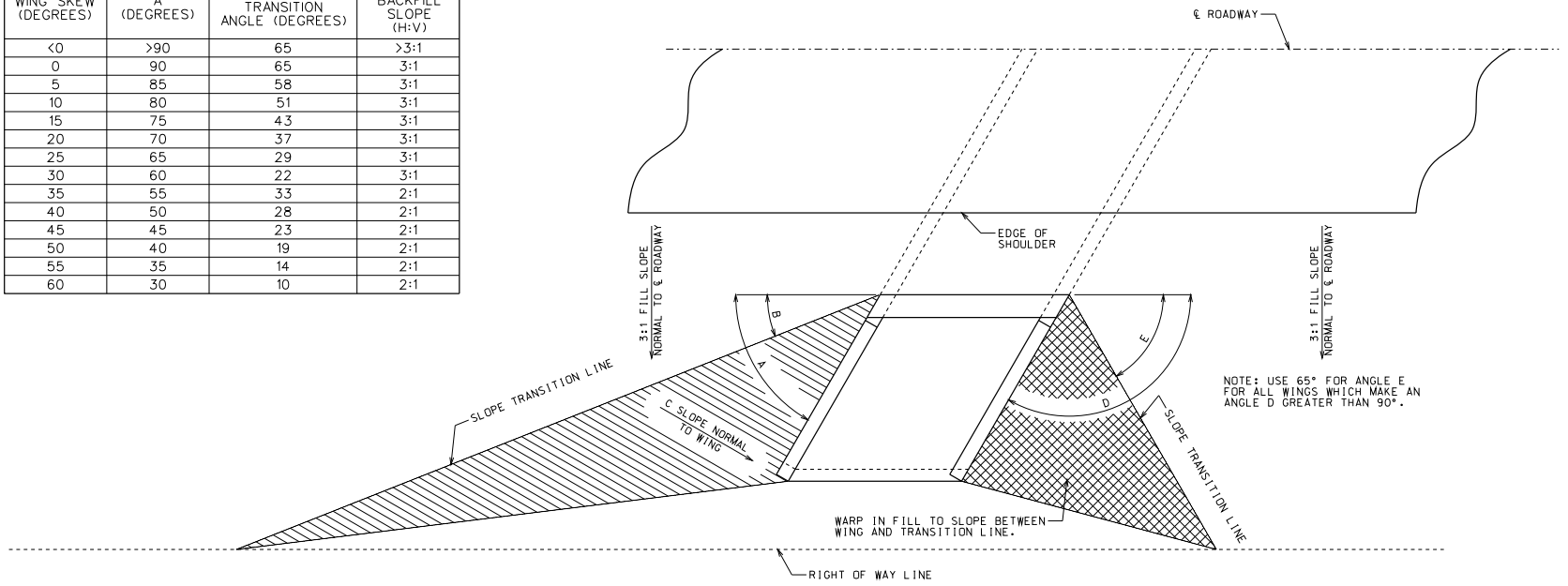


## PLAN OF WINGS AND SLOPE TRANSITION LINES

NOTE: BACKFILL TRANSITION ANGLE AND BACKFILL SLOPE SHALL APPLY TO ALL BOX CULVERTS REGARDLESS OF TYPE - SINGLE, DOUBLE, OR TRIPLE.


MISSOURI HIGHWAYS AND TRANSPORTATION COMMISSION
105 WEST CAPITOL
JEFFERSON CITY, MO 65102
1-888-ASK-MODOT (1-888-275-6636)


STATE OF MISSOURI
DENNIS W. HECKMAN
NUMBER PE-27141
PROFESSIONAL ENGINEER
THIS SHEET HAS BEEN SIGNED, SEALED AND DATED ELECTRONICALLY.

# CONCRETE BOX CULVERT

EXTERIOR WING BACKFILL SLOPE TRANSITION

DATE EFFECTIVE: 04/01/2011
DATE PREPARED: 4/18/2011

703.37C

SHEET NO. 2 OF 2

IF A SEAL IS PRESENT ON THIS SHEET IT HAS BEEN ELECTRONICALLY SEALED AND DATED.

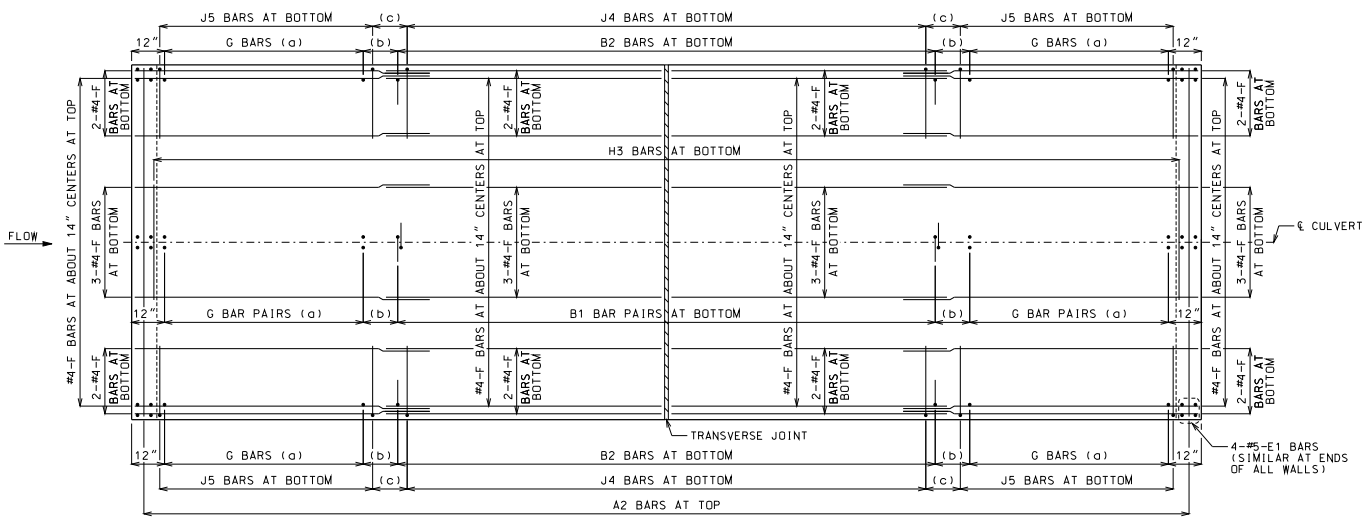


PLAN OF BOTTOM SLAB

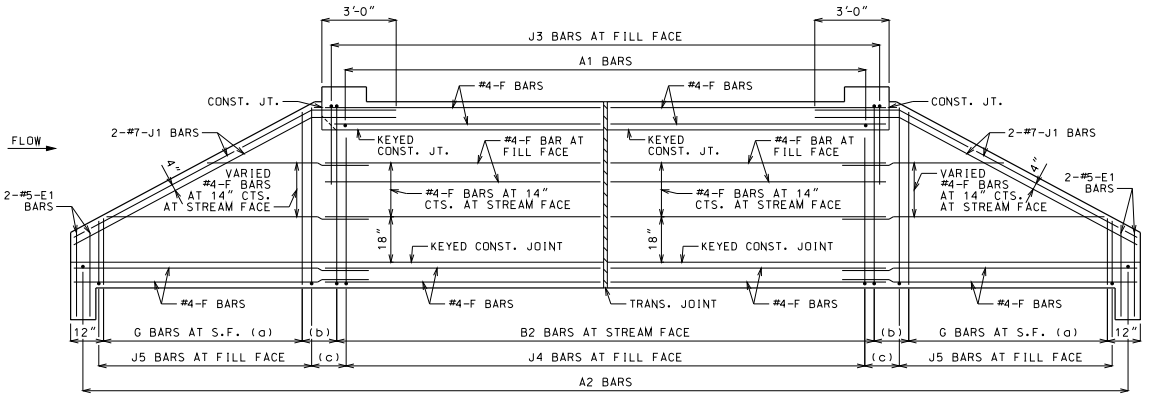


ELEVATION OF EXTERIOR WALL

J1 BARS MAY BE BENT IN FIELD OR SHOP.

## LAYING OUT TRANVERSE JOINTS

UNLESS SHOWN ON BRIDGE PLANS

USE A TRANSVERSE JOINT WHEN BARREL LENGTH IS OVER 80 FEET. USE ADDITIONAL JOINTS TO LIMIT CUT SECTION LENGTH AND END SECTION BARREL LENGTH MEASURED ALONG CENTERLINE OF CULVERT TO 50 FEET.

MINIMUM END SECTION LENGTH SHALL BE 3 FEET MEASURED ALONG THE SHORTEST WALL FROM THE INSIDE FACE OF HEADWALL TO THE TRANSVERSE JOINT.

TO AVOID LOCATING TRANSVERSE JOINTS UNDER A TRAVELED WAY WITH DESIGN FILLS 2 FEET OR LESS THE FOLLOWING SHALL APPLY:

BARREL LENGTH UP TO 90 FEET WITHOUT A TRANSVERSE JOINT

CUT SECTION LENGTHS UP TO 60 FEET

WHEN BARREL AND CUT SECTION LENGTH RESTRICTIONS REQUIRE TRANSVERSE JOINTS TO BE LOCATED UNDER A TRAVELED WAY WITH DESIGN FILLS 2 FEET OR LESS, THE JOINTS SHALL BE LOCATED TO MINIMIZE THE LENGTH OF JOINT UNDER THE TRAVELED WAY.

TRAVELED WAY IS THE ROADWAY WIDTH MINUS SHOULDER WIDTHS.

FOR CUT SECTION DETAILS, SEE 703.46.

## GENERAL NOTES:

FOR SECTIONS THRU BARREL, WINGS AND HEADWALLS, SEE SHEET 3 OF 3. FOR BAR SIZES, SPACING AND DIMENSIONS OF ALL REINFORCEMENT EXCEPT J5 BARS, SEE 703.47. FOR J5 BARS, SEE 703.37.

CONSTRUCTION JOINT KEY NOT SHOWN FOR CLARITY IN PLAN AND ELEVATION, SEE SHEET 3 OF 3 FOR DETAILS.

DRAWING NOT TO SCALE. FOLLOW DIMENSIONS.

MINIMUM CLEARANCE TO REINFORCING STEEL SHALL BE 1½".

LAP LONGITUDINAL BARS A MINIMUM OF 23" AT SPLICES.

BEVELED HEADWALL SHALL BE LOCATED AT UPSTREAM END.

(a) SAME SIZE AND SPACING AS ADJACENT B BARS

(b) VARIES, 12" MAXIMUM

(c) J4 BAR SPACING

MISSOURI HIGHWAYS AND TRANSPORTATION COMMISSION
105 WEST CAPITOL
JEFFERSON CITY, MO 65102
1-888-ASK-MODOT (1-888-275-6636)

STATE OF MISSOURI
DENNIS W. HECKMAN
NUMBER PE-27141
PROFESSIONAL ENGINEER
THIS SHEET HAS BEEN SIGNED, SEALED AND DATED ELECTRONICALLY.

# CONCRETE DOUBLE BOX CULVERT

SKEW: SQUARE
WINGS: STRAIGHT

REINFORCEMENT

| DATE EFFECTIVE: | 10/01/2011 | 703.40H | SHEET NO. 1 OF 3 |
|---|---|---|---|
| DATE PREPARED: | 9/8/2011 | | |

IF A SEAL IS PRESENT ON THIS SHEET IT HAS BEEN ELECTRONICALLY SEALED AND DATED.

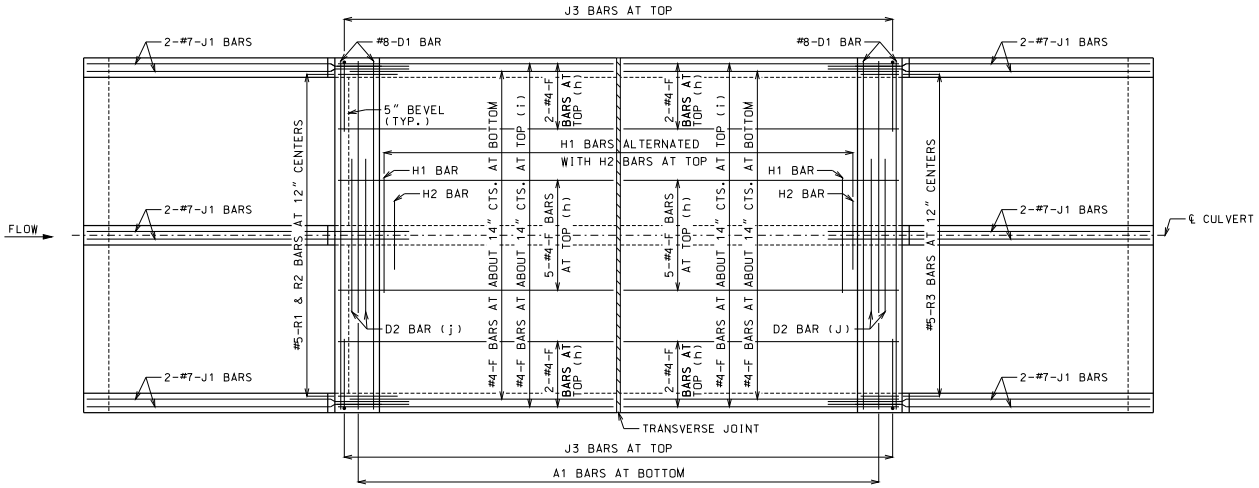


## PLAN OF TOP SLAB

B BARS IN WALLS ARE NOT SHOWN FOR CLARITY.
FOR PLACEMENT, SEE SHEET 1 OF 3.

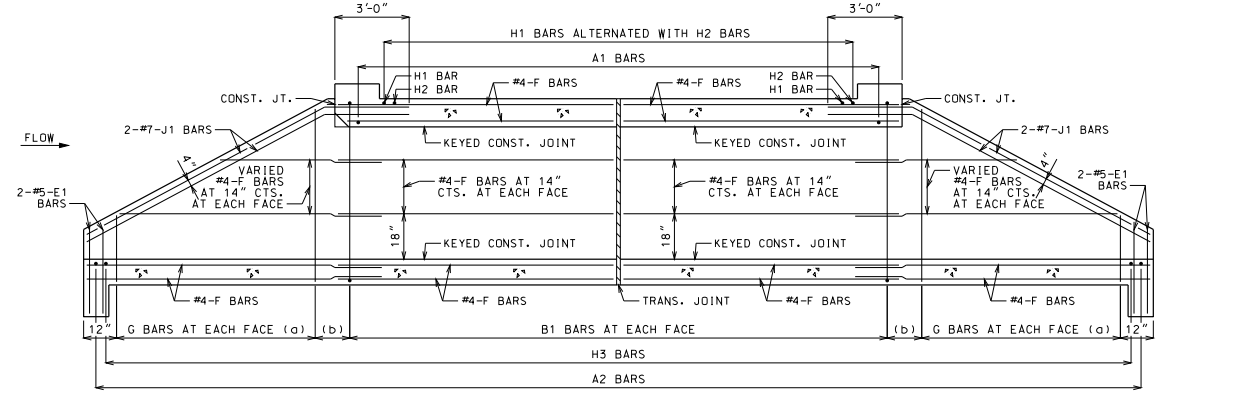


## SECTION NEAR INTERIOR WALL

J1 BARS MAY BE BENT IN FIELD OR SHOP.

## GENERAL NOTES:

FOR SECTIONS THRU BARREL, WINGS AND HEADWALLS, SEE SHEET 3 OF 3. FOR BAR SIZES, SPACING AND DIMENSIONS OF ALL REINFORCEMENT EXCEPT J5 BARS, SEE 703.47. FOR J5 BARS, SEE 703.37.

CONSTRUCTION JOINT KEY NOT SHOWN FOR CLARITY IN PLAN AND SECTION, SEE SHEET 3 OF 3 FOR DETAILS.

DRAWING NOT TO SCALE. FOLLOW DIMENSIONS.

MINIMUM CLEARANCE TO REINFORCING STEEL SHALL BE 1½".

LAP LONGITUDINAL BARS A MINIMUM OF 23" AT SPLICES.

BEVELED HEADWALL SHALL BE LOCATED AT UPSTREAM END.

(a) SAME SIZE AND SPACING AS ADJACENT B BARS

(b) VARIES, 12" MAXIMUM

(c) NOT SPECIFIED ON THIS SHEET

(d) NOT SPECIFIED ON THIS SHEET

(e) NOT SPECIFIED ON THIS SHEET

(f) NOT SPECIFIED ON THIS SHEET

(g) NOT SPECIFIED ON THIS SHEET

(h) FOR DESIGN FILLS OVER 2'-0"

(i) FOR DESIGN FILLS 2'-0" OR LESS

(j) NOT REQUIRED FOR CLEAR SPANS ≤ 10'-0"
#8 FOR CLEAR SPAN > 10'-0"
#9 FOR CLEAR SPAN > 13'-0"

IF REQUIRED, THE MINIMUM LENGTH EACH SIDE OF ℄ WALL SHALL BE THE GREATER OF 48 BAR DIAMETERS OR ¼ CLEAR SPAN. THE CLEAR SPAN IS PARALLEL TO LONG DIRECTION OF HEADWALL.

MISSOURI HIGHWAYS AND TRANSPORTATION COMMISSION
105 WEST CAPITOL
JEFFERSON CITY, MO 65102
1-888-ASK-MODOT (1-888-275-6636)

STATE OF MISSOURI
DENNIS W. HECKMAN
NUMBER PE-27141
PROFESSIONAL ENGINEER
THIS SHEET HAS BEEN SIGNED, SEALED AND DATED ELECTRONICALLY.

# CONCRETE DOUBLE BOX CULVERT

SKEW: SQUARE
WINGS: STRAIGHT

REINFORCEMENT

DATE EFFECTIVE: 10/01/2011
DATE PREPARED: 9/8/2011

703.40H

SHEET NO. 2 OF 3

IF A SEAL IS PRESENT ON THIS SHEET IT HAS BEEN ELECTRONICALLY SEALED AND DATED.

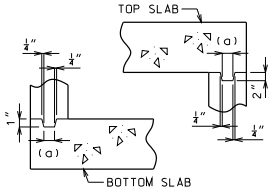


KEYED CONSTRUCTION JOINT

(a) APPROXIMATELY ONE-THIRD OF WALL THICKNESS

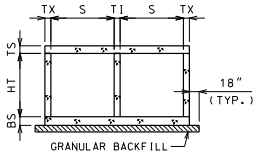


GRANULAR BACKFILL LIMITS AND MEMBER DIMENSIONS

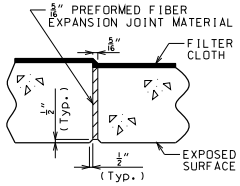


TRANSVERSE JOINT THRU BARREL

PREFORMED FIBER EXPANSION JOINT MATERIAL SHALL BE SECURELY STITCHED TO ONE FACE OF THE CONCRETE WITH NO. 10 GAGE COPPER WIRE OR NO. 12 GAGE SOFT DRAWN GALVANIZED STEEL WIRE.

FILTER CLOTH 3 FEET IN WIDTH AND DOUBLE THICKNESS SHALL BE CENTERED ON TRANSVERSE JOINTS IN TOP SLAB AND SIDEWALLS WITH EDGES SEALED WITH MASTIC OR TWO SIDED TAPE. FILTER CLOTH SHALL BE A SUBSURFACE DRAINAGE GEOTEXTILE IN ACCORDANCE WITH SECTION 1011 OF THE STANDARD SPECIFICATIONS FOR HIGHWAY CONSTRUCTION. COST OF FURNISHING AND INSTALLING FILTER CLOTH WILL BE CONSIDERED COMPLETELY COVERED BY THE CONTRACT UNIT PRICE FOR OTHER ITEMS.

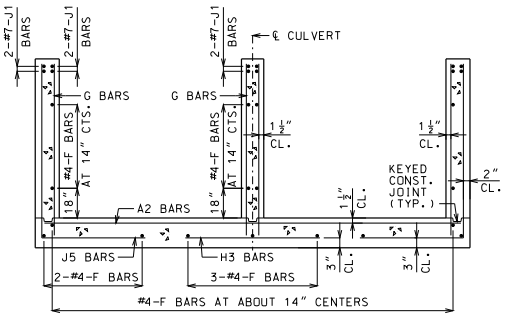


UPSTREAM AND DOWNSTREAM WINGS REINFORCEMENT

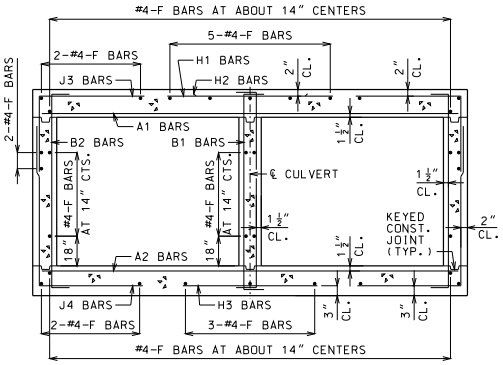


BARREL REINFORCEMENT

FOR DESIGN FILLS OVER 2'-0"

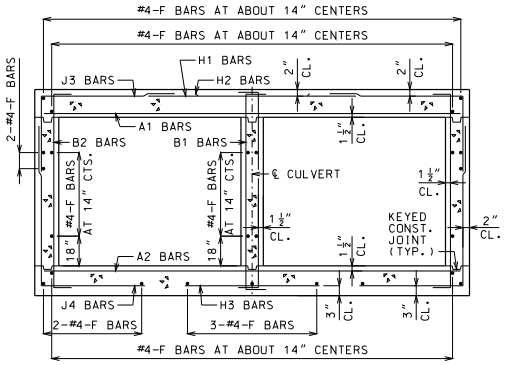


BARREL REINFORCEMENT

FOR DESIGN FILLS 2'-0" OR LESS

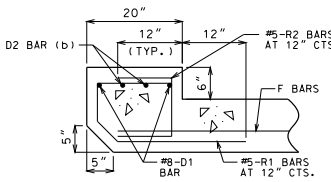


UPSTREAM HEADWALL REINFORCEMENT

NEAR INTERIOR WALL

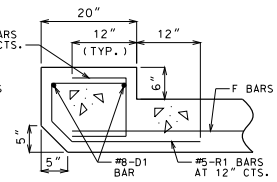


UPSTREAM HEADWALL REINFORCEMENT

NEAR MIDSPAN

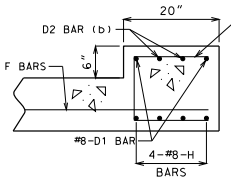


DOWNSTREAM HEADWALL REINFORCEMENT

NEAR INTERIOR WALL

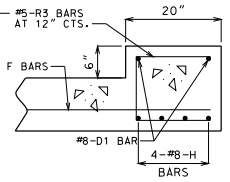


DOWNSTREAM HEADWALL REINFORCEMENT

NEAR MIDSPAN

(b) #8 FOR CLEAR SPAN > 10'-0"
#9 FOR CLEAR SPAN > 13'-0"
NOT REQUIRED FOR CLEAR SPANS ≤ 10'-0"

IF D2 BARS ARE REQUIRED, THE MINIMUM LENGTH EACH SIDE OF ℄ WALL SHALL BE THE GREATER OF 48 BAR DIAMETERS OR ¼ CLEAR SPAN. THE CLEAR SPAN IS PARALLEL TO LONG DIRECTION OF HEADWALL.

## GENERAL NOTES:

FOR MEMBER THICKNESS AND FOR BAR SIZES, SPACING AND DIMENSIONS OF ALL REINFORCEMENT EXCEPT J5 BARS, SEE 703.47. FOR J5 BARS, SEE 703.37.

BARREL AND WINGS SECTIONS ARE SYMMETRICAL ABOUT AND NORMAL TO ℄ CULVERT. HEADWALL SECTIONS ARE NORMAL TO LONG DIRECTION OF HEADWALL.

DRAWING NOT TO SCALE. FOLLOW DIMENSIONS.

MINIMUM CLEARANCE TO REINFORCING STEEL SHALL BE 1½".

MISSOURI HIGHWAYS AND TRANSPORTATION COMMISSION
105 WEST CAPITOL
JEFFERSON CITY, MO 65102
1-888-ASK-MODOT (1-888-275-6636)

STATE OF MISSOURI
DENNIS W. HECKMAN
NUMBER PE-27141
PROFESSIONAL ENGINEER
THIS SHEET HAS BEEN SIGNED, SEALED AND DATED ELECTRONICALLY.

# CONCRETE DOUBLE BOX CULVERT

SKEW: SQUARE
WINGS: STRAIGHT

SECTIONS

| DATE EFFECTIVE: | 10/01/2011 | 703.40H | SHEET NO. 3 OF 3 |
|---|---|---|---|
| DATE PREPARED: | 9/8/2011 | | |

IF A SEAL IS PRESENT ON THIS SHEET IT HAS BEEN ELECTRONICALLY SEALED AND DATED.

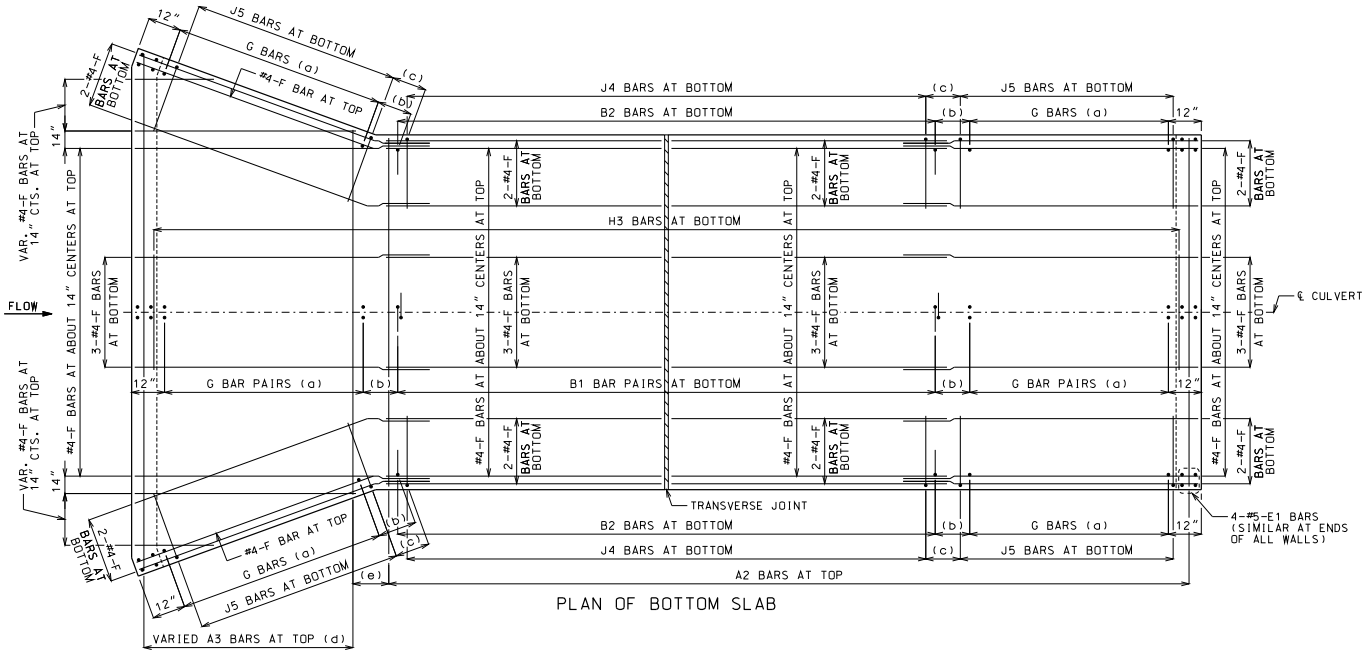


PLAN OF BOTTOM SLAB

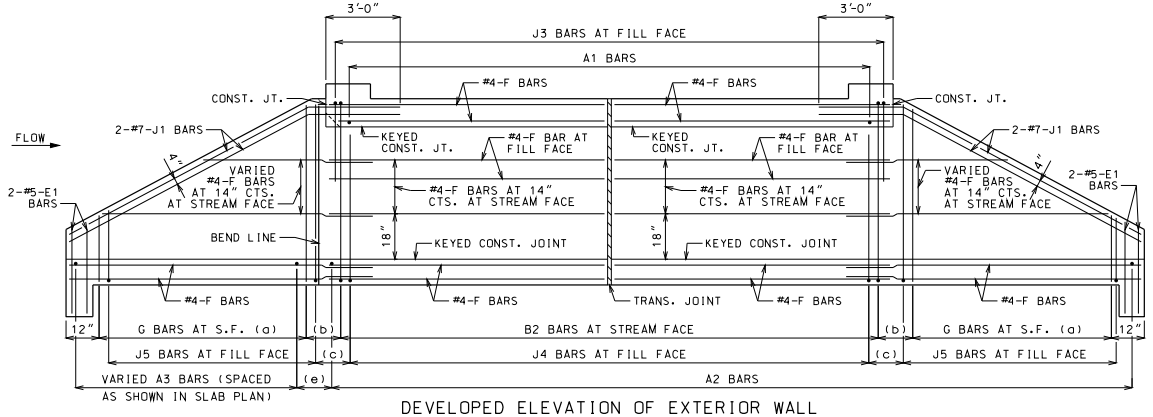


DEVELOPED ELEVATION OF EXTERIOR WALL

J1 BARS MAY BE BENT IN FIELD OR SHOP.

## LAYING OUT TRANVERSE JOINTS

UNLESS SHOWN ON BRIDGE PLANS

USE A TRANSVERSE JOINT WHEN BARREL LENGTH IS OVER 80 FEET. USE ADDITIONAL JOINTS TO LIMIT CUT SECTION LENGTH AND END SECTION BARREL LENGTH MEASURED ALONG CENTERLINE OF CULVERT TO 50 FEET.

MINIMUM END SECTION LENGTH SHALL BE 3 FEET MEASURED ALONG THE SHORTEST WALL FROM THE INSIDE FACE OF HEADWALL TO THE TRANSVERSE JOINT.

TO AVOID LOCATING TRANSVERSE JOINTS UNDER A TRAVELED WAY WITH DESIGN FILLS 2 FEET OR LESS THE FOLLOWING SHALL APPLY:

BARREL LENGTH UP TO 90 FEET WITHOUT A TRANSVERSE JOINT

CUT SECTION LENGTHS UP TO 60 FEET

WHEN BARREL AND CUT SECTION LENGTH RESTRICTIONS REQUIRE TRANSVERSE JOINTS TO BE LOCATED UNDER A TRAVELED WAY WITH DESIGN FILLS 2 FEET OR LESS, THE JOINTS SHALL BE LOCATED TO MINIMIZE THE LENGTH OF JOINT UNDER THE TRAVELED WAY.

TRAVELED WAY IS THE ROADWAY WIDTH MINUS SHOULDER WIDTHS.

FOR CUT SECTION DETAILS. SEE 703.46.

## GENERAL NOTES:

FOR SECTIONS THRU BARREL, WINGS AND HEADWALLS, SEE SHEET 3 OF 3. FOR BAR SIZES, SPACING AND DIMENSIONS OF ALL REINFORCEMENT EXCEPT J5 BARS, SEE 703.47. FOR J5 BARS, SEE 703.37.

CONSTRUCTION JOINT KEY NOT SHOWN FOR CLARITY IN PLAN AND ELEVATION, SEE SHEET 3 OF 3 FOR DETAILS.

DRAWING NOT TO SCALE. FOLLOW DIMENSIONS.

MINIMUM CLEARANCE TO REINFORCING STEEL SHALL BE 1 1/2 ".

LAP LONGITUDINAL BARS A MINIMUM OF 23" AT SPLICES.

BEVELED HEADWALL SHALL BE LOCATED AT UPSTREAM END.

(a) SAME SIZE AND SPACING AS ADJACENT B BARS

(b) VARIES, 12" MAXIMUM

(c) J4 BAR SPACING

(d) SAME SIZE AND SPACING AS A2 BARS

(e) A2 BAR SPACING

MISSOURI HIGHWAYS AND TRANSPORTATION COMMISSION
105 WEST CAPITOL
JEFFERSON CITY, MO 65102
1-888-ASK-MODOT (1-888-275-6636)

STATE OF MISSOURI
DENNIS W. HECKMAN
NUMBER PE-27141
PROFESSIONAL ENGINEER
THIS SHEET HAS BEEN SIGNED, SEALED AND DATED ELECTRONICALLY.

# CONCRETE DOUBLE BOX CULVERT

SKEW: SQUARE
WINGS: FLARED

REINFORCEMENT

DATE EFFECTIVE: 10/01/2011
DATE PREPARED: 9/8/2011

703.41H

SHEET NO. 1 OF 3

IF A SEAL IS PRESENT ON THIS SHEET IT HAS BEEN ELECTRONICALLY SEALED AND DATED.

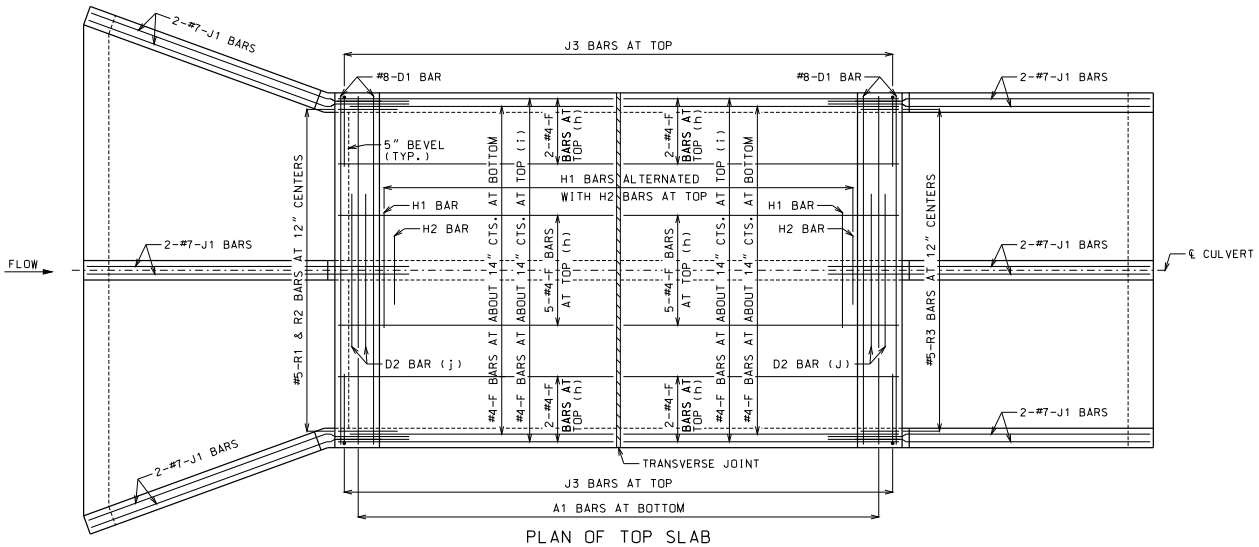


PLAN OF TOP SLAB

B BARS IN WALLS ARE NOT SHOWN FOR CLARITY.
FOR PLACEMENT, SEE SHEET 1 OF 3.

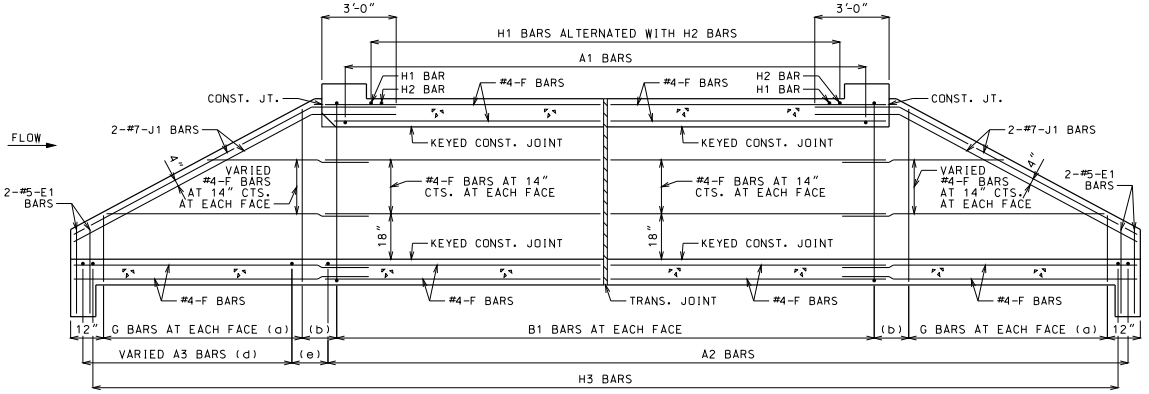


SECTION NEAR INTERIOR WALL

J1 BARS MAY BE BENT IN FIELD OR SHOP.

## GENERAL NOTES:

FOR SECTIONS THRU BARREL, WINGS AND HEADWALLS, SEE SHEET 3 OF 3. FOR BAR SIZES, SPACING AND DIMENSIONS OF ALL REINFORCEMENT EXCEPT J5 BARS, SEE 703.47. FOR J5 BARS, SEE 703.37.

CONSTRUCTION JOINT KEY NOT SHOWN FOR CLARITY IN PLAN AND SECTION, SEE SHEET 3 OF 3 FOR DETAILS.

DRAWING NOT TO SCALE. FOLLOW DIMENSIONS.

MINIMUM CLEARANCE TO REINFORCING STEEL SHALL BE 1½".

LAP LONGITUDINAL BARS A MINIMUM OF 23" AT SPLICES.

BEVELED HEADWALL SHALL BE LOCATED AT UPSTREAM END.

(a) SAME SIZE AND SPACING AS ADJACENT B BARS

(b) VARIES, 12" MAXIMUM

(c) NOT SPECFIED ON THIS SHEET

(d) SAME SIZE AND SPACING AS A2 BARS

(e) A2 BAR SPACING

(f) NOT SPECFIED ON THIS SHEET

(g) NOT SPECFIED ON THIS SHEET

(h) FOR DESIGN FILLS OVER 2'-0"

(i) FOR DESIGN FILLS 2'-0" OR LESS

(j) NOT REQUIRED FOR CLEAR SPANS ≤ 10'-0"
#8 FOR CLEAR SPAN > 10'-0"
#9 FOR CLEAR SPAN > 13'-0"

IF REQUIRED, THE MINIMUM LENGTH EACH SIDE OF ℄ WALL SHALL BE THE GREATER OF 48 BAR DIAMETERS OR ¼ CLEAR SPAN. THE CLEAR SPAN IS PARALLEL TO LONG DIRECTION OF HEADWALL.

IF A SEAL IS PRESENT ON THIS SHEET IT HAS BEEN ELECTRONICALLY SEALED AND DATED.

MISSOURI HIGHWAYS AND TRANSPORTATION COMMISSION
105 WEST CAPITOL
JEFFERSON CITY, MO 65102
1-888-ASK-MODOT (1-888-275-6636)

STATE OF MISSOURI
DENNIS W. HECKMAN
NUMBER PE-27141
PROFESSIONAL ENGINEER
THIS SHEET HAS BEEN SIGNED, SEALED AND DATED ELECTRONICALLY.

# CONCRETE DOUBLE BOX CULVERT

SKEW: SQUARE
WINGS: FLARED

REINFORCEMENT

| DATE EFFECTIVE: | 10/01/2011 | 703.41H | SHEET NO. 2 OF 3 |
|---|---|---|---|
| DATE PREPARED: | 9/8/2011 | | |

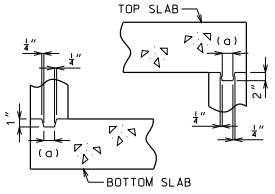


KEYED CONSTRUCTION JOINT

(a) APPROXIMATELY ONE-THIRD OF WALL THICKNESS

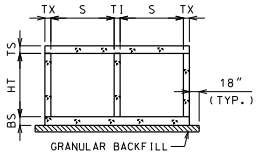


GRANULAR BACKFILL LIMITS AND MEMBER DIMENSIONS

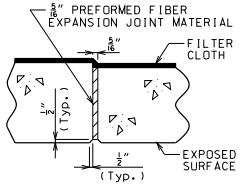


TRANSVERSE JOINT THRU BARREL

PREFORMED FIBER EXPANSION JOINT MATERIAL SHALL BE SECURELY STITCHED TO ONE FACE OF THE CONCRETE WITH NO. 10 GAGE COPPER WIRE OR NO. 12 GAGE SOFT DRAWN GALVANIZED STEEL WIRE.

FILTER CLOTH 3 FEET IN WIDTH AND DOUBLE THICKNESS SHALL BE CENTERED ON TRANSVERSE JOINTS IN TOP SLAB AND SIDEWALLS WITH EDGES SEALED WITH MASTIC OR TWO SIDED TAPE. FILTER CLOTH SHALL BE A SUBSURFACE DRAINAGE GEOTEXTILE IN ACCORDANCE WITH SECTION 1011 OF THE STANDARD SPECIFICATIONS FOR HIGHWAY CONSTRUCTION. COST OF FURNISHING AND INSTALLING FILTER CLOTH WILL BE CONSIDERED COMPLETELY COVERED BY THE CONTRACT UNIT PRICE FOR OTHER ITEMS.

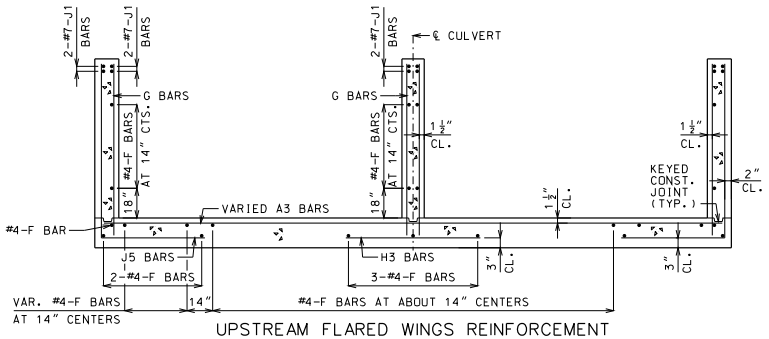


UPSTREAM FLARED WINGS REINFORCEMENT

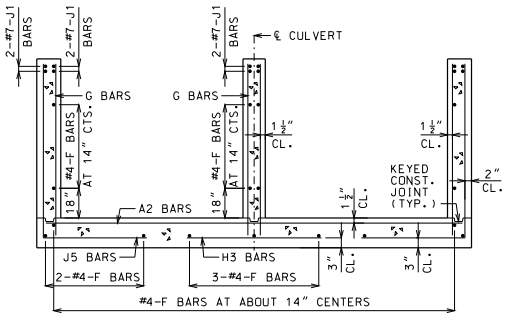


DOWNSTREAM WINGS REINFORCEMENT

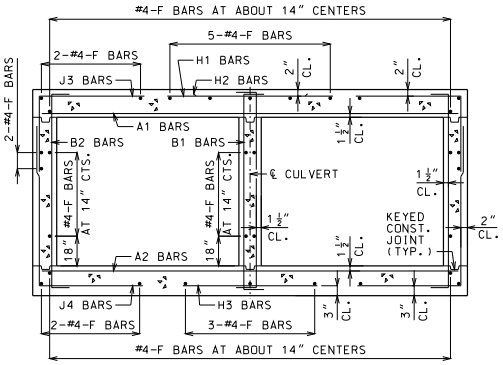


BARREL REINFORCEMENT

FOR DESIGN FILLS OVER 2'-0"

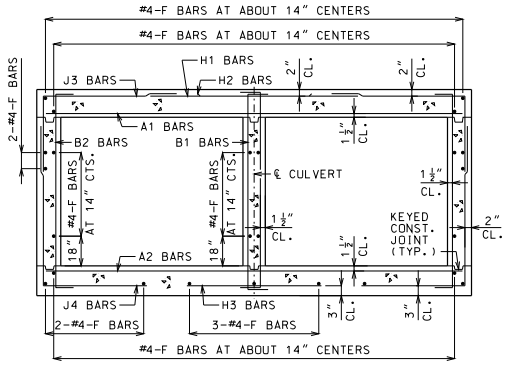


BARREL REINFORCEMENT

FOR DESIGN FILLS 2'-0" OR LESS

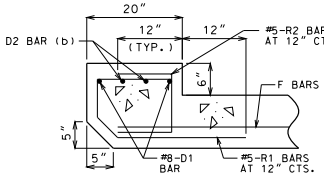


UPSTREAM HEADWALL REINFORCEMENT

NEAR INTERIOR WALL

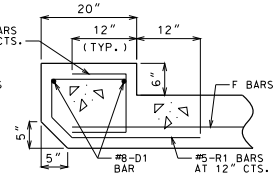


UPSTREAM HEADWALL REINFORCEMENT

NEAR MIDSPAN

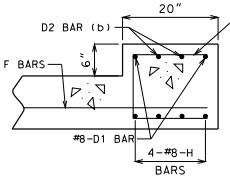


DOWNSTREAM HEADWALL REINFORCEMENT

NEAR INTERIOR WALL

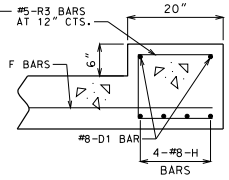


DOWNSTREAM HEADWALL REINFORCEMENT

NEAR MIDSPAN

(b) #8 FOR CLEAR SPAN > 10'-0"
#9 FOR CLEAR SPAN > 13'-0"
NOT REQUIRED FOR CLEAR SPANS ≤ 10'-0"

IF D2 BARS ARE REQUIRED, THE MINIMUM LENGTH EACH SIDE OF ℄ WALL SHALL BE THE GREATER OF 48 BAR DIAMETERS OR ¼ CLEAR SPAN. THE CLEAR SPAN IS PARALLEL TO LONG DIRECTION OF HEADWALL.

GENERAL NOTES:

FOR MEMBER THICKNESS AND FOR BAR SIZES, SPACING AND DIMENSIONS OF ALL REINFORCEMENT EXCEPT J5 BARS, SEE 703.47. FOR J5 BARS, SEE 703.37.

BARREL AND WINGS SECTIONS ARE SYMMETRICAL ABOUT AND NORMAL TO ℄ CULVERT. HEADWALL SECTIONS ARE NORMAL TO LONG DIRECTION OF HEADWALL.

DRAWING NOT TO SCALE. FOLLOW DIMENSIONS.

MINIMUM CLEARANCE TO REINFORCING STEEL SHALL BE 1½".

MISSOURI HIGHWAYS AND TRANSPORTATION COMMISSION
105 WEST CAPITOL
JEFFERSON CITY, MO 65102
1-888-ASK-MODOT (1-888-275-6636)

STATE OF MISSOURI
DENNIS W. HECKMAN
NUMBER PE-27141
PROFESSIONAL ENGINEER
THIS SHEET HAS BEEN SIGNED, SEALED AND DATED ELECTRONICALLY.

# CONCRETE DOUBLE BOX CULVERT

SKEW: SQUARE
WINGS: FLARED

SECTIONS

| DATE EFFECTIVE: | 10/01/2011 | 703.41H | SHEET NO. 3 OF 3 |
|---|---|---|---|
| DATE PREPARED: | 9/8/2011 | | |

IF A SEAL IS PRESENT ON THIS SHEET IT HAS BEEN ELECTRONICALLY SEALED AND DATED.

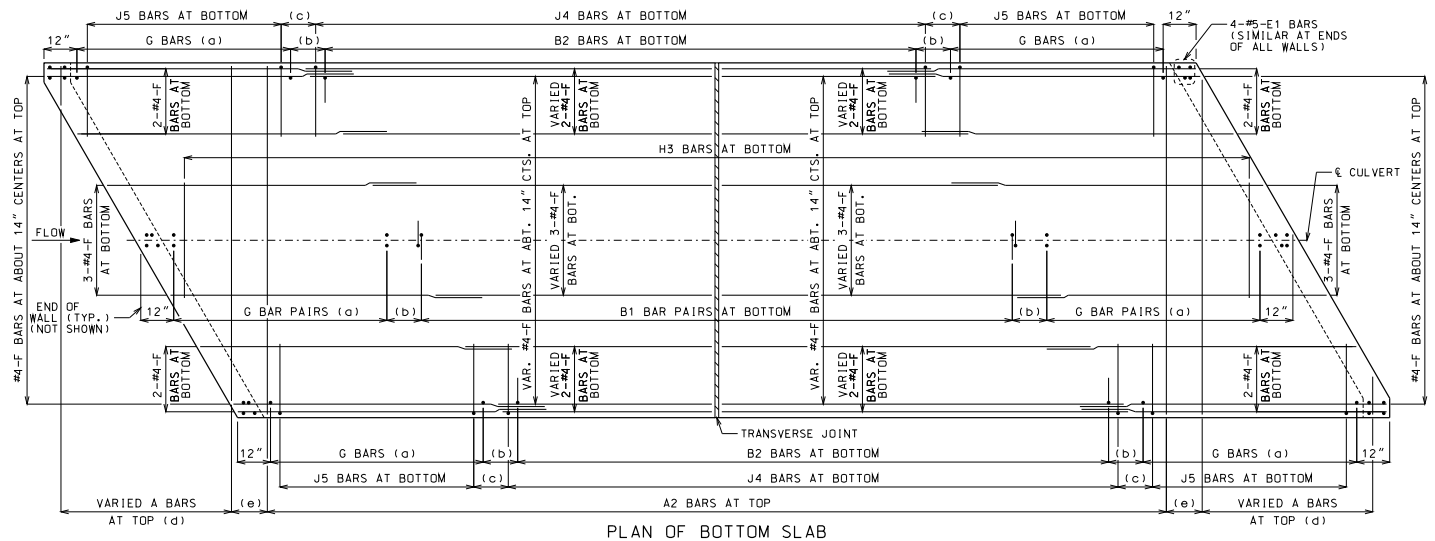


PLAN OF BOTTOM SLAB

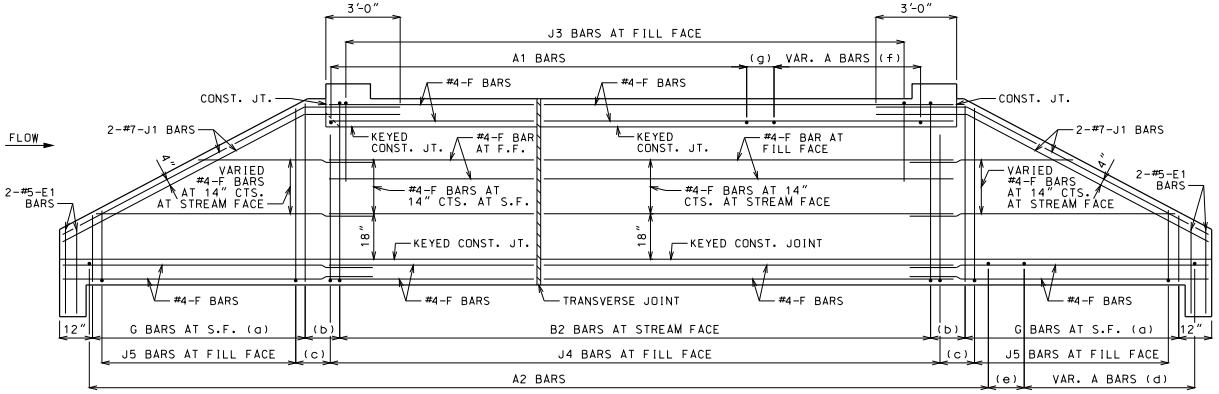


ELEVATION OF EXTERIOR WALL

J1 BARS MAY BE BENT IN FIELD OR SHOP.

## LAYING OUT TRANVERSE JOINTS

UNLESS SHOWN ON BRIDGE PLANS

USE A TRANSVERSE JOINT WHEN BARREL LENGTH IS OVER 80 FEET. USE ADDITIONAL JOINTS TO LIMIT CUT SECTION LENGTH AND END SECTION BARREL LENGTH MEASURED ALONG CENTERLINE OF CULVERT TO 50 FEET.

MINIMUM END SECTION LENGTH SHALL BE 3 FEET MEASURED ALONG THE SHORTEST WALL FROM THE INSIDE FACE OF HEADWALL TO THE TRANSVERSE JOINT.

TO AVOID LOCATING TRANSVERSE JOINTS UNDER A TRAVELED WAY WITH DESIGN FILLS 2 FEET OR LESS THE FOLLOWING SHALL APPLY:

BARREL LENGTH UP TO 90 FEET WITHOUT A TRANSVERSE JOINT

CUT SECTION LENGTHS UP TO 60 FEET

WHEN BARREL AND CUT SECTION LENGTH RESTRICTIONS REQUIRE TRANSVERSE JOINTS TO BE LOCATED UNDER A TRAVELED WAY WITH DESIGN FILLS 2 FEET OR LESS, THE JOINTS SHALL BE LOCATED TO MINIMIZE THE LENGTH OF JOINT UNDER THE TRAVELED WAY.

TRAVELED WAY IS THE ROADWAY WIDTH MINUS SHOULDER WIDTHS.

FOR CUT SECTION DETAILS, SEE 703.46.

## GENERAL NOTES:

FOR SECTIONS THRU BARREL, WINGS AND HEADWALLS, SEE SHEET 3 OF 3. FOR BAR SIZES, SPACING AND DIMENSIONS OF ALL REINFORCEMENT EXCEPT J5 BARS, SEE 703.47. FOR J5 BARS, SEE 703.37.

CONSTRUCTION JOINT KEY NOT SHOWN FOR CLARITY IN PLAN AND ELEVATION, SEE SHEET 3 OF 3 FOR DETAILS.

DRAWING NOT TO SCALE. FOLLOW DIMENSIONS.

MINIMUM CLEARANCE TO REINFORCING STEEL SHALL BE 1½".

LAP LONGITUDINAL BARS A MINIMUM OF 23" AT SPLICES.

BEVELED HEADWALL SHALL BE LOCATED AT UPSTREAM END.

(a) SAME SIZE AND SPACING AS ADJACENT B BARS

(b) VARIES, 12" MAXIMUM

(c) J4 BAR SPACING

(d) SAME SIZE AND SPACING AS A2 BARS

(e) A2 BAR SPACING

(f) SAME SIZE AND SPACING AS A1 BARS

(g) A1 BAR SPACING

MISSOURI HIGHWAYS AND TRANSPORTATION COMMISSION
105 WEST CAPITOL
JEFFERSON CITY, MO 65102
1-888-ASK-MODOT (1-888-275-6636)

STATE OF MISSOURI
DENNIS W. HECKMAN
NUMBER PE-27141
PROFESSIONAL ENGINEER
THIS SHEET HAS BEEN SIGNED, SEALED AND DATED ELECTRONICALLY.

# CONCRETE DOUBLE BOX CULVERT

SKEW: LEFT ADVANCE
WINGS: STRAIGHT

REINFORCEMENT

| DATE EFFECTIVE: | 10/01/2011 | 703.42H | SHEET NO. 1 OF 3 |
|---|---|---|---|
| DATE PREPARED: | 9/29/2011 | | |

IF A SEAL IS PRESENT ON THIS SHEET IT HAS BEEN ELECTRONICALLY SEALED AND DATED.

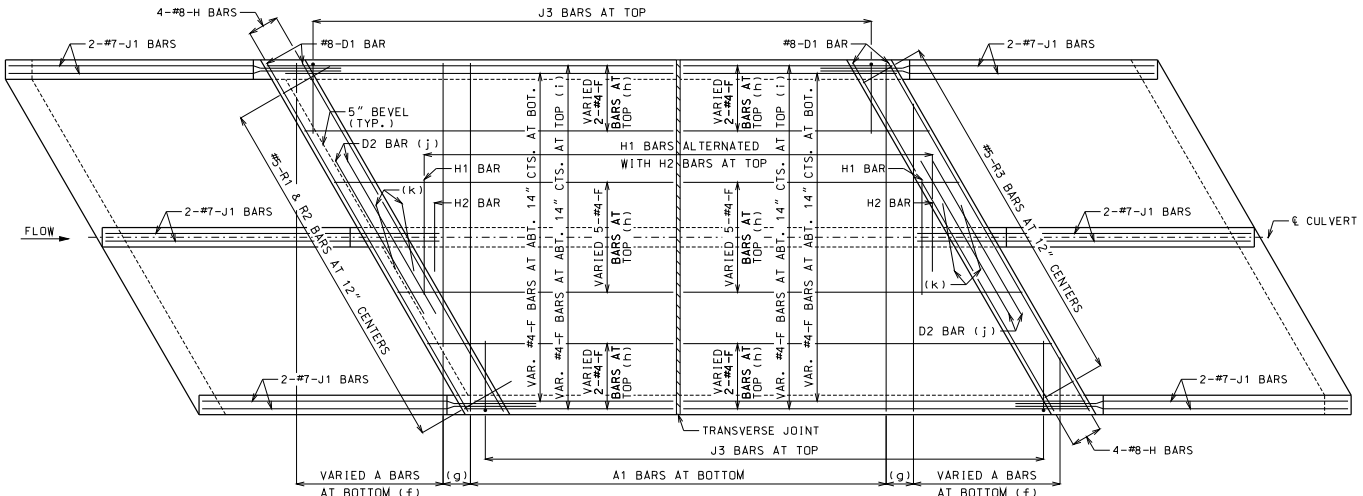


PLAN OF TOP SLAB

B BARS IN WALLS ARE NOT SHOWN FOR CLARITY.
FOR PLACEMENT. SEE SHEET 1 OF 3.

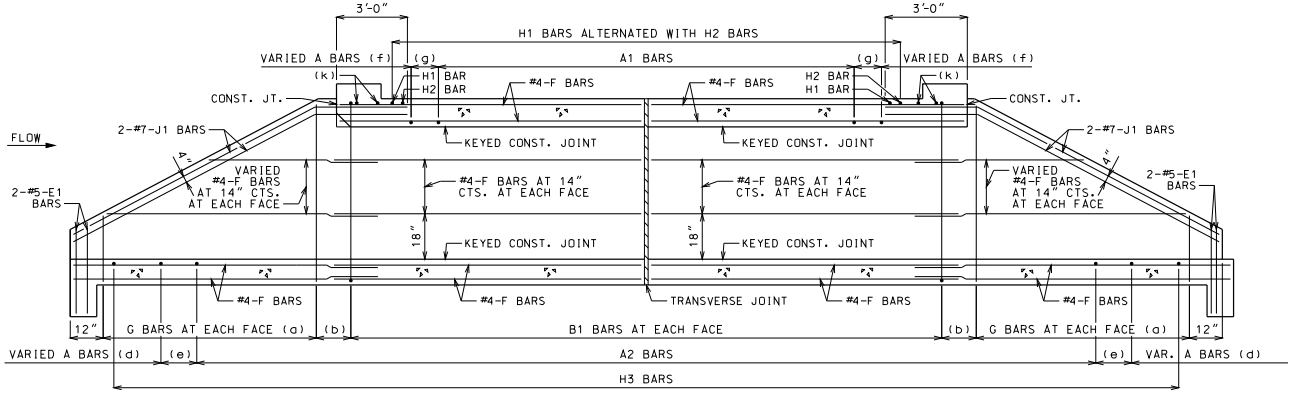


SECTION NEAR INTERIOR WALL

J1 BARS MAY BE BENT IN FIELD OR SHOP.

## GENERAL NOTES:

FOR SECTIONS THRU BARREL, WINGS AND HEADWALLS, SEE SHEET 3 OF 3. FOR BAR SIZES, SPACING AND DIMENSIONS OF ALL REINFORCEMENT EXCEPT J5 BARS, SEE 703.47. FOR J5 BARS, SEE 703.37.

CONSTRUCTION JOINT KEY NOT SHOWN FOR CLARITY IN PLAN AND SECTION. SEE SHEET 3 OF 3 FOR DETAILS.

DRAWING NOT TO SCALE. FOLLOW DIMENSIONS.

MINIMUM CLEARANCE TO REINFORCING STEEL SHALL BE 1½".

LAP LONGITUDINAL BARS A MINIMUM OF 23" AT SPLICES.

BEVELED HEADWALL SHALL BE LOCATED AT UPSTREAM END.

(a) SAME SIZE AND SPACING AS ADJACENT B BARS

(b) VARIES, 12" MAXIMUM

(c) NOT SPECIFIED ON THIS SHEET

(d) SAME SIZE AND SPACING AS A2 BARS

(e) A2 BAR SPACING

(f) SAME SIZE AND SPACING AS A1 BARS

(g) A1 BAR SPACING

(h) FOR DESIGN FILLS OVER 2'-0"

(i) FOR DESIGN FILLS 2'-0" OR LESS

(j) NOT REQUIRED FOR CLEAR SPANS ≤ 10'-0"
#8 FOR CLEAR SPAN > 10'-0"
#9 FOR CLEAR SPAN > 13'-0"

IF REQUIRED, THE MINIMUM LENGTH EACH SIDE OF ℄ WALL SHALL BE THE GREATER OF 48 BAR DIAMETERS OR ¼ CLEAR SPAN. THE CLEAR SPAN IS PARALLEL TO LONG DIRECTION OF HEADWALL.

(k) H2 BARS AS REQUIRED. QUANTITY OF BARS VARIES WITH SKEW.

IF A SEAL IS PRESENT ON THIS SHEET IT HAS BEEN ELECTRONICALLY SEALED AND DATED.

MISSOURI HIGHWAYS AND TRANSPORTATION COMMISSION
105 WEST CAPITOL
JEFFERSON CITY, MO 65102
1-888-ASK-MODOT (1-888-275-6636)

STATE OF MISSOURI DENNIS W. HECKMAN NUMBER PE-27141 PROFESSIONAL ENGINEER
THIS SHEET HAS BEEN SIGNED, SEALED AND DATED ELECTRONICALLY.

# CONCRETE DOUBLE BOX CULVERT

SKEW: LEFT ADVANCE
WINGS: STRAIGHT

REINFORCEMENT

DATE EFFECTIVE: 10/01/2011
DATE PREPARED: 9/8/2011

703.42H

SHEET NO. 2 OF 3

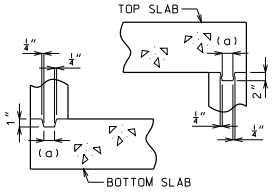


KEYED CONSTRUCTION JOINT

(a) APPROXIMATELY ONE-THIRD OF WALL THICKNESS

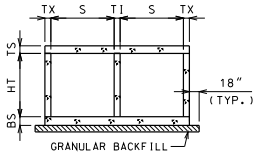


GRANULAR BACKFILL LIMITS AND MEMBER DIMENSIONS

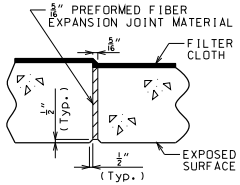


TRANSVERSE JOINT THRU BARREL

PREFORMED FIBER EXPANSION JOINT MATERIAL SHALL BE SECURELY STITCHED TO ONE FACE OF THE CONCRETE WITH NO. 10 GAGE COPPER WIRE OR NO. 12 GAGE SOFT DRAWN GALVANIZED STEEL WIRE.

FILTER CLOTH 3 FEET IN WIDTH AND DOUBLE THICKNESS SHALL BE CENTERED ON TRANSVERSE JOINTS IN TOP SLAB AND SIDEWALLS WITH EDGES SEALED WITH MASTIC OR TWO SIDED TAPE. FILTER CLOTH SHALL BE A SUBSURFACE DRAINAGE GEOTEXTILE IN ACCORDANCE WITH SECTION 1011 OF THE STANDARD SPECIFICATIONS FOR HIGHWAY CONSTRUCTION. COST OF FURNISHING AND INSTALLING FILTER CLOTH WILL BE CONSIDERED COMPLETELY COVERED BY THE CONTRACT UNIT PRICE FOR OTHER ITEMS.

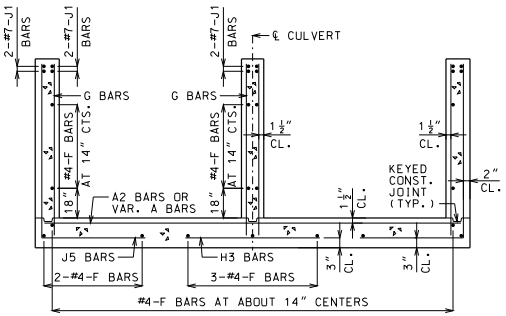


UPSTREAM AND DOWNSTREAM WINGS REINFORCEMENT

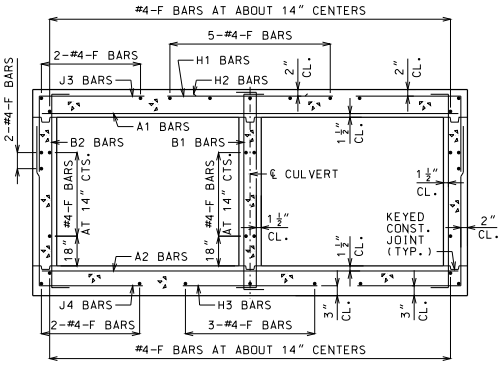


BARREL REINFORCEMENT

FOR DESIGN FILLS OVER 2'-0"

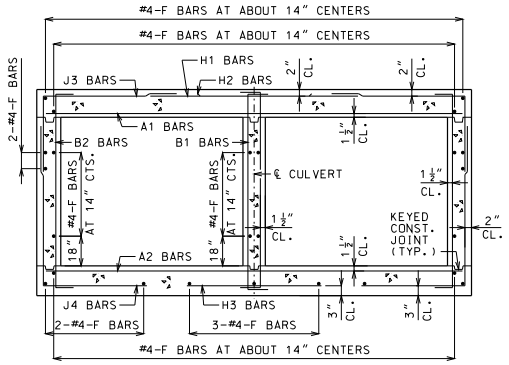


BARREL REINFORCEMENT

FOR DESIGN FILLS 2'-0" OR LESS

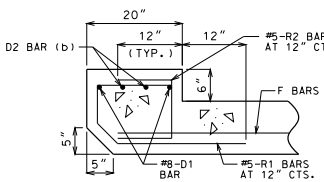


UPSTREAM HEADWALL REINFORCEMENT

NEAR INTERIOR WALL

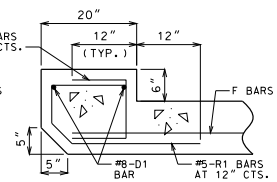


UPSTREAM HEADWALL REINFORCEMENT

NEAR MIDSPAN

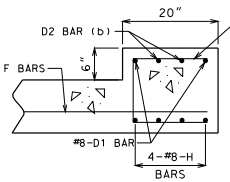


DOWNSTREAM HEADWALL REINFORCEMENT

NEAR INTERIOR WALL

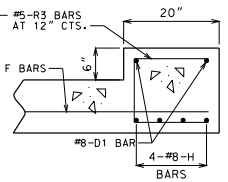


DOWNSTREAM HEADWALL REINFORCEMENT

NEAR MIDSPAN

(b) #8 FOR CLEAR SPAN > 10'-0"
#9 FOR CLEAR SPAN > 13'-0"
NOT REQUIRED FOR CLEAR SPANS ≤ 10'-0"

IF D2 BARS ARE REQUIRED, THE MINIMUM LENGTH EACH SIDE OF ℄ WALL SHALL BE THE GREATER OF 48 BAR DIAMETERS OR ¼ CLEAR SPAN. THE CLEAR SPAN IS PARALLEL TO LONG DIRECTION OF HEADWALL.

## GENERAL NOTES:

FOR MEMBER THICKNESS AND FOR BAR SIZES, SPACING AND DIMENSIONS OF ALL REINFORCEMENT EXCEPT J5 BARS, SEE 703.47. FOR J5 BARS, SEE 703.37.

BARREL AND WINGS SECTIONS ARE SYMMETRICAL ABOUT AND NORMAL TO ℄ CULVERT. HEADWALL SECTIONS ARE NORMAL TO LONG DIRECTION OF HEADWALL.

DRAWING NOT TO SCALE. FOLLOW DIMENSIONS.

MINIMUM CLEARANCE TO REINFORCING STEEL SHALL BE 1½".

MISSOURI HIGHWAYS AND TRANSPORTATION COMMISSION
105 WEST CAPITOL
JEFFERSON CITY, MO 65102
1-888-ASK-MODOT (1-888-275-6636)

STATE OF MISSOURI
DENNIS W. HECKMAN
NUMBER PE-27141
PROFESSIONAL ENGINEER
THIS SHEET HAS BEEN SIGNED, SEALED AND DATED ELECTRONICALLY.

# CONCRETE DOUBLE BOX CULVERT

SKEW: LEFT ADVANCE
WINGS: STRAIGHT

SECTIONS

| DATE EFFECTIVE: | 10/01/2011 | 703.42H | SHEET NO. 3 OF 3 |
|---|---|---|---|
| DATE PREPARED: | 9/8/2011 | | |

IF A SEAL IS PRESENT ON THIS SHEET IT HAS BEEN ELECTRONICALLY SEALED AND DATED.

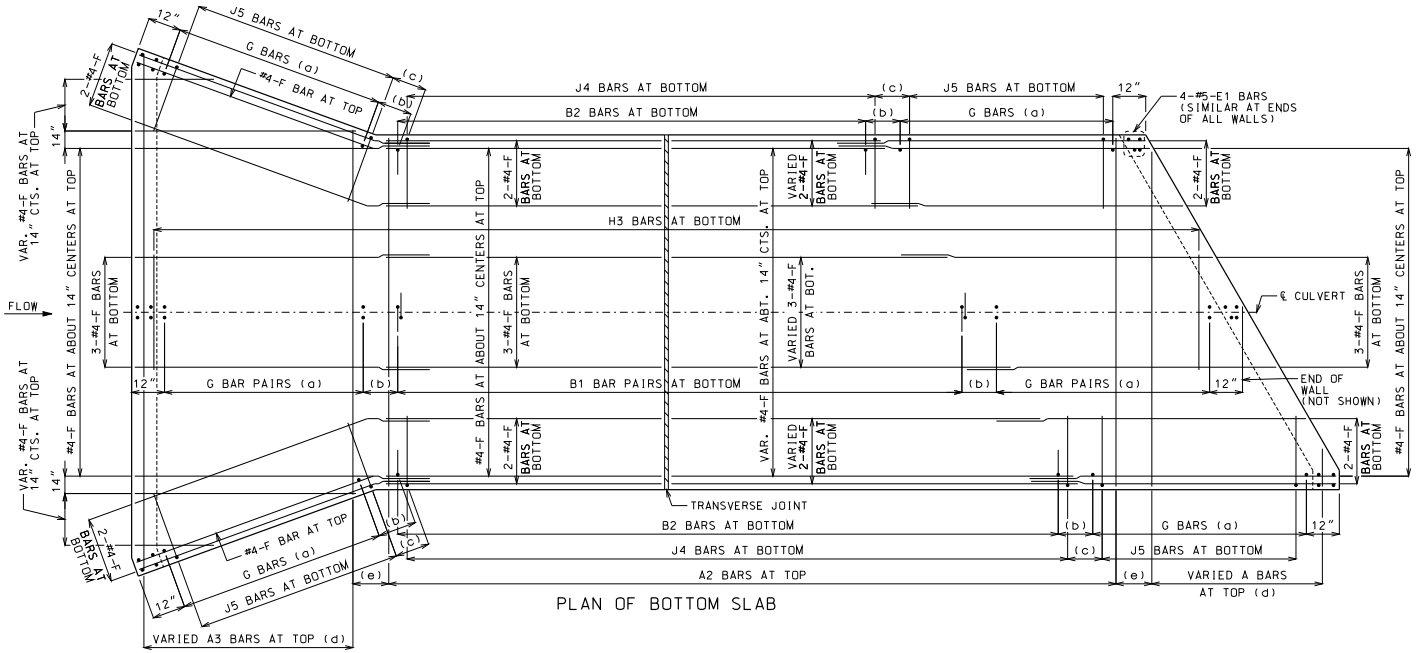


PLAN OF BOTTOM SLAB

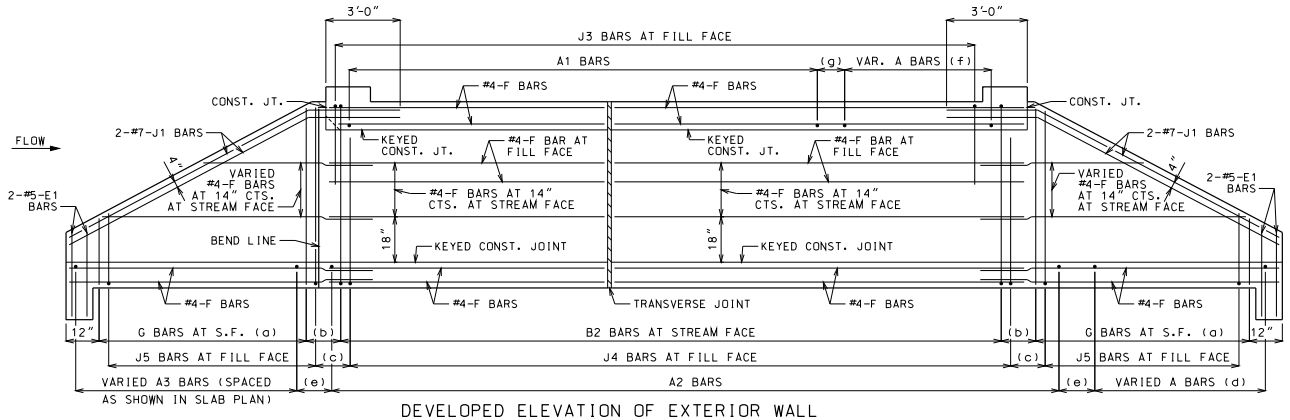


DEVELOPED ELEVATION OF EXTERIOR WALL

J1 BARS MAY BE BENT IN FIELD OR SHOP.

## LAYING OUT TRANVERSE JOINTS

UNLESS SHOWN ON BRIDGE PLANS

USE A TRANSVERSE JOINT WHEN BARREL LENGTH IS OVER 80 FEET. USE ADDITIONAL JOINTS TO LIMIT CUT SECTION LENGTH AND END SECTION BARREL LENGTH MEASURED ALONG CENTERLINE OF CULVERT TO 50 FEET.

MINIMUM END SECTION LENGTH SHALL BE 3 FEET MEASURED ALONG THE SHORTEST WALL FROM THE INSIDE FACE OF HEADWALL TO THE TRANSVERSE JOINT.

TO AVOID LOCATING TRANSVERSE JOINTS UNDER A TRAVELED WAY WITH DESIGN FILLS 2 FEET OR LESS THE FOLLOWING SHALL APPLY:

BARREL LENGTH UP TO 90 FEET WITHOUT A TRANSVERSE JOINT

CUT SECTION LENGTHS UP TO 60 FEET

WHEN BARREL AND CUT SECTION LENGTH RESTRICTIONS REQUIRE TRANSVERSE JOINTS TO BE LOCATED UNDER A TRAVELED WAY WITH DESIGN FILLS 2 FEET OR LESS, THE JOINTS SHALL BE LOCATED TO MINIMIZE THE LENGTH OF JOINT UNDER THE TRAVELED WAY.

TRAVELED WAY IS THE ROADWAY WIDTH MINUS SHOULDER WIDTHS.

FOR CUT SECTION DETAILS, SEE 703.46.

## GENERAL NOTES:

FOR SECTIONS THRU BARREL, WINGS AND HEADWALLS, SEE SHEET 3 OF 3. FOR BAR SIZES, SPACING AND DIMENSIONS OF ALL REINFORCEMENT EXCEPT J5 BARS, SEE 703.47. FOR J5 BARS, SEE 703.37.

CONSTRUCTION JOINT KEY NOT SHOWN FOR CLARITY IN PLAN AND ELEVATION, SEE SHEET 3 OF 3 FOR DETAILS.

DRAWING NOT TO SCALE. FOLLOW DIMENSIONS.

MINIMUM CLEARANCE TO REINFORCING STEEL SHALL BE 1½".

LAP LONGITUDINAL BARS A MINIMUM OF 23" AT SPLICES.

BEVELED HEADWALL SHALL BE LOCATED AT UPSTREAM END.

(a) SAME SIZE AND SPACING AS ADJACENT B BARS

(b) VARIES, 12" MAXIMUM

(c) J4 BAR SPACING

(d) SAME SIZE AND SPACING AS A2 BARS

(e) A2 BAR SPACING

(f) SAME SIZE AND SPACING AS A1 BARS

(g) A1 BAR SPACING

MISSOURI HIGHWAYS AND TRANSPORTATION COMMISSION
105 WEST CAPITOL
JEFFERSON CITY, MO 65102
1-888-ASK-MODOT (1-888-275-6636)

STATE OF MISSOURI
DENNIS W. HECKMAN
NUMBER PE-27141
PROFESSIONAL ENGINEER
THIS SHEET HAS BEEN SIGNED, SEALED AND DATED ELECTRONICALLY.

# CONCRETE DOUBLE BOX CULVERT

SKEW: LEFT ADVANCE
WINGS: FLARED

REINFORCEMENT

| DATE EFFECTIVE: | 10/01/2011 | 703.43H | SHEET NO. 1 OF 3 |
|---|---|---|---|
| DATE PREPARED: | 9/8/2011 | | |

IF A SEAL IS PRESENT ON THIS SHEET IT HAS BEEN ELECTRONICALLY SEALED AND DATED.

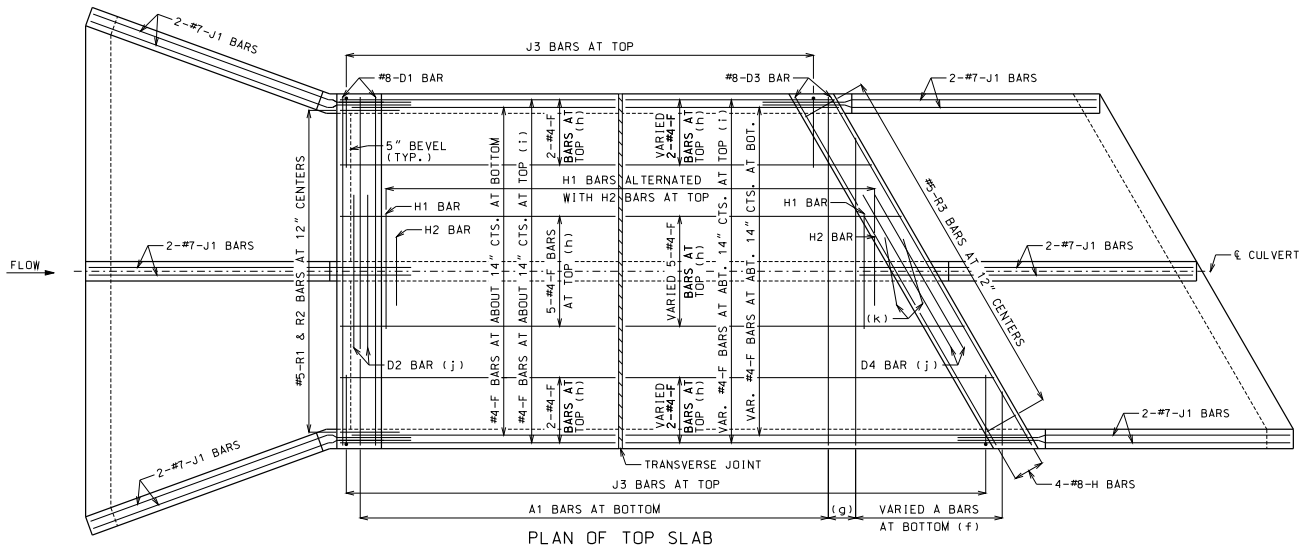


## PLAN OF TOP SLAB

B BARS IN WALLS ARE NOT SHOWN FOR CLARITY.
FOR PLACEMENT, SEE SHEET 1 OF 3.

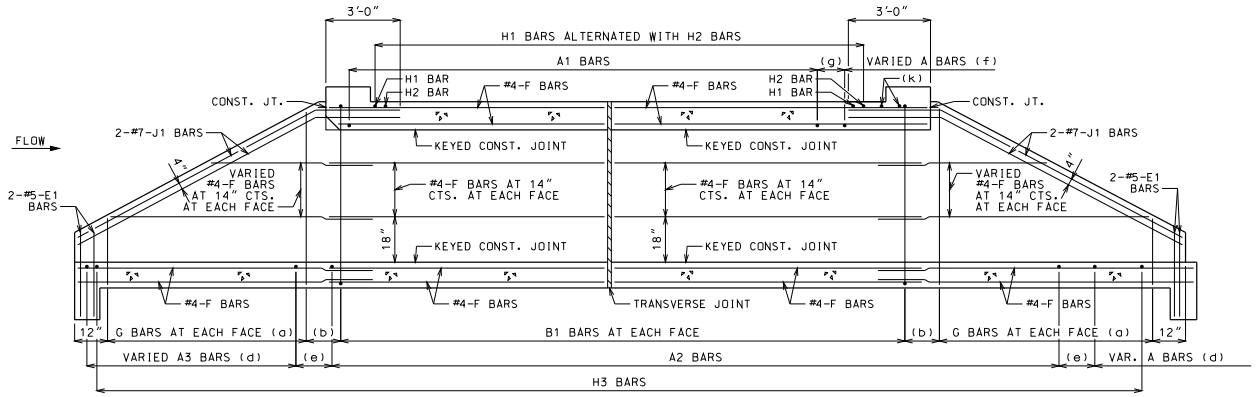


## SECTION NEAR INTERIOR WALL

J1 BARS MAY BE BENT IN FIELD OR SHOP.

## GENERAL NOTES:

FOR SECTIONS THRU BARREL, WINGS AND HEADWALLS, SEE SHEET 3 OF 3. FOR BAR SIZES, SPACING AND DIMENSIONS OF ALL REINFORCEMENT EXCEPT J5 BARS, SEE 703.47. FOR J5 BARS, SEE 703.37.

CONSTRUCTION JOINT KEY NOT SHOWN FOR CLARITY IN PLAN AND SECTION, SEE SHEET 3 OF 3 FOR DETAILS.

DRAWING NOT TO SCALE. FOLLOW DIMENSIONS.

MINIMUM CLEARANCE TO REINFORCING STEEL SHALL BE 1½".

LAP LONGITUDINAL BARS A MINIMUM OF 23" AT SPLICES.

BEVELED HEADWALL SHALL BE LOCATED AT UPSTREAM END.

(a) SAME SIZE AND SPACING AS ADJACENT B BARS

(b) VARIES, 12" MAXIMUM

(c) NOT SPECIFIED ON THIS SHEET

(d) SAME SIZE AND SPACING AS A2 BARS

(e) A2 BAR SPACING

(f) SAME SIZE AND SPACING AS A1 BARS

(g) A1 BAR SPACING

(h) FOR DESIGN FILLS OVER 2'-0"

(i) FOR DESIGN FILLS 2'-0" OR LESS

(j) NOT REQUIRED FOR CLEAR SPANS ≤ 10'-0"
#8 FOR CLEAR SPAN > 10'-0"
#9 FOR CLEAR SPAN > 13'-0"

IF REQUIRED, THE MINIMUM LENGTH EACH SIDE OF ℄ WALL SHALL BE THE GREATER OF 48 BAR DIAMETERS OR ¼ CLEAR SPAN. THE CLEAR SPAN IS PARALLEL TO LONG DIRECTION OF HEADWALL.

(k) H2 BARS AS REQUIRED, QUANTITY OF BARS VARIES WITH SKEW.

IF A SEAL IS PRESENT ON THIS SHEET IT HAS BEEN ELECTRONICALLY SEALED AND DATED.


MISSOURI HIGHWAYS AND TRANSPORTATION COMMISSION
105 WEST CAPITOL
JEFFERSON CITY, MO 65102
1-888-ASK-MODOT (1-888-275-6636)


STATE OF MISSOURI
DENNIS W. HECKMAN
NUMBER PE-27141
PROFESSIONAL ENGINEER
THIS SHEET HAS BEEN SIGNED, SEALED AND DATED ELECTRONICALLY.

# CONCRETE DOUBLE BOX CULVERT

SKEW: LEFT ADVANCE
WINGS: FLARED

REINFORCEMENT

| DATE EFFECTIVE: | 10/01/2011 | 703.43H | SHEET NO. 2 OF 3 |
|---|---|---|---|
| DATE PREPARED: | 9/8/2011 | | |

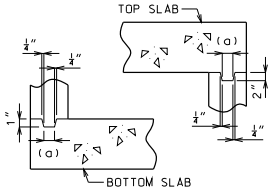


KEYED CONSTRUCTION JOINT

(a) APPROXIMATELY ONE-THIRD OF WALL THICKNESS

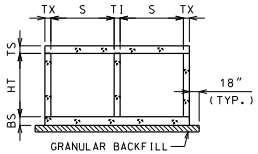


GRANULAR BACKFILL LIMITS AND MEMBER DIMENSIONS

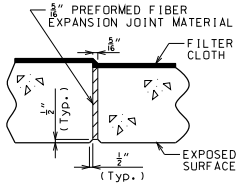


TRANSVERSE JOINT THRU BARREL

PREFORMED FIBER EXPANSION JOINT MATERIAL SHALL BE SECURELY STITCHED TO ONE FACE OF THE CONCRETE WITH NO. 10 GAGE COPPER WIRE OR NO. 12 GAGE SOFT DRAWN GALVANIZED STEEL WIRE.

FILTER CLOTH 3 FEET IN WIDTH AND DOUBLE THICKNESS SHALL BE CENTERED ON TRANSVERSE JOINTS IN TOP SLAB AND SIDEWALLS WITH EDGES SEALED WITH MASTIC OR TWO SIDED TAPE. FILTER CLOTH SHALL BE A SUBSURFACE DRAINAGE GEOTEXTILE IN ACCORDANCE WITH SECTION 1011 OF THE STANDARD SPECIFICATIONS FOR HIGHWAY CONSTRUCTION. COST OF FURNISHING AND INSTALLING FILTER CLOTH WILL BE CONSIDERED COMPLETELY COVERED BY THE CONTRACT UNIT PRICE FOR OTHER ITEMS.

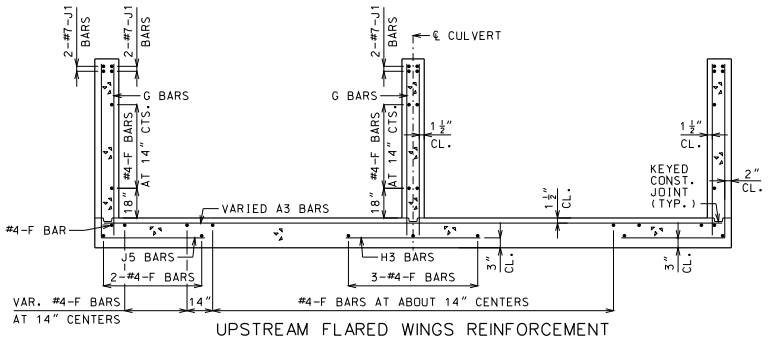


UPSTREAM FLARED WINGS REINFORCEMENT

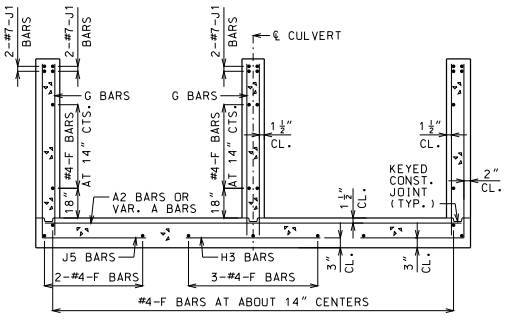


DOWNSTREAM WINGS REINFORCEMENT

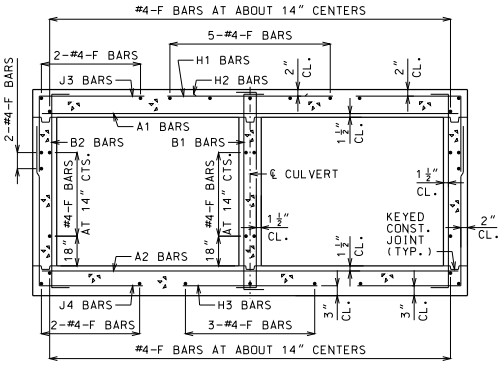


BARREL REINFORCEMENT

FOR DESIGN FILLS OVER 2'-0"

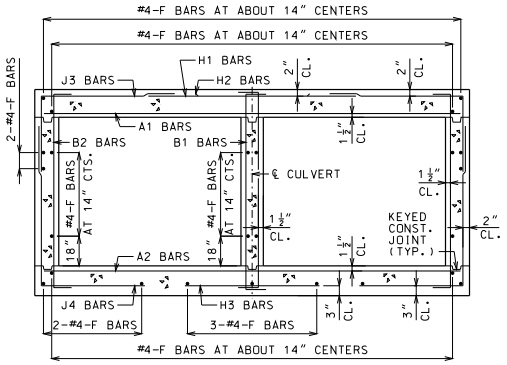


BARREL REINFORCEMENT

FOR DESIGN FILLS 2'-0" OR LESS

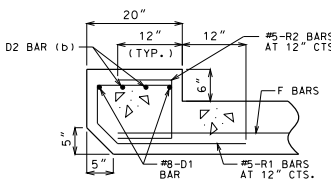


UPSTREAM HEADWALL REINFORCEMENT

NEAR INTERIOR WALL

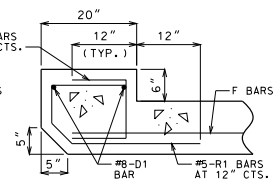


UPSTREAM HEADWALL REINFORCEMENT

NEAR MIDSPAN

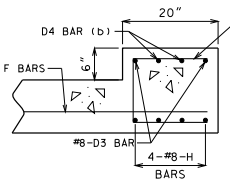


DOWNSTREAM HEADWALL REINFORCEMENT

NEAR INTERIOR WALL

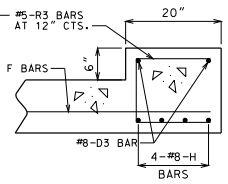


DOWNSTREAM HEADWALL REINFORCEMENT

NEAR MIDSPAN

(b) #8 FOR CLEAR SPAN > 10'-0"
#9 FOR CLEAR SPAN > 13'-0"
NOT REQUIRED FOR CLEAR SPANS ≤ 10'-0"

IF D2 AND D4 BARS ARE REQUIRED, THE MINIMUM LENGTH EACH SIDE OF ℄ WALL SHALL BE THE GREATER OF 48 BAR DIAMETERS OR ¼ CLEAR SPAN. THE CLEAR SPAN IS PARALLEL TO LONG DIRECTION OF HEADWALL.

GENERAL NOTES:

FOR MEMBER THICKNESS AND FOR BAR SIZES, SPACING AND DIMENSIONS OF ALL REINFORCEMENT EXCEPT J5 BARS, SEE 703.47. FOR J5 BARS, SEE 703.37.

BARREL AND WINGS SECTIONS ARE SYMMETRICAL ABOUT AND NORMAL TO ℄ CULVERT. HEADWALL SECTIONS ARE NORMAL TO LONG DIRECTION OF HEADWALL.

DRAWING NOT TO SCALE. FOLLOW DIMENSIONS.

MINIMUM CLEARANCE TO REINFORCING STEEL SHALL BE 1½".

MISSOURI HIGHWAYS AND TRANSPORTATION COMMISSION
105 WEST CAPITOL
JEFFERSON CITY, MO 65102
1-888-ASK-MODOT (1-888-275-6636)

STATE OF MISSOURI
DENNIS W. HECKMAN
NUMBER PE-27141
PROFESSIONAL ENGINEER
THIS SHEET HAS BEEN SIGNED, SEALED AND DATED ELECTRONICALLY.

# CONCRETE DOUBLE BOX CULVERT

SKEW: LEFT ADVANCE
WINGS: FLARED

SECTIONS

DATE EFFECTIVE: 10/01/2011
DATE PREPARED: 9/8/2011

703.43H

SHEET NO. 3 OF 3

IF A SEAL IS PRESENT ON THIS SHEET IT HAS BEEN ELECTRONICALLY SEALED AND DATED.

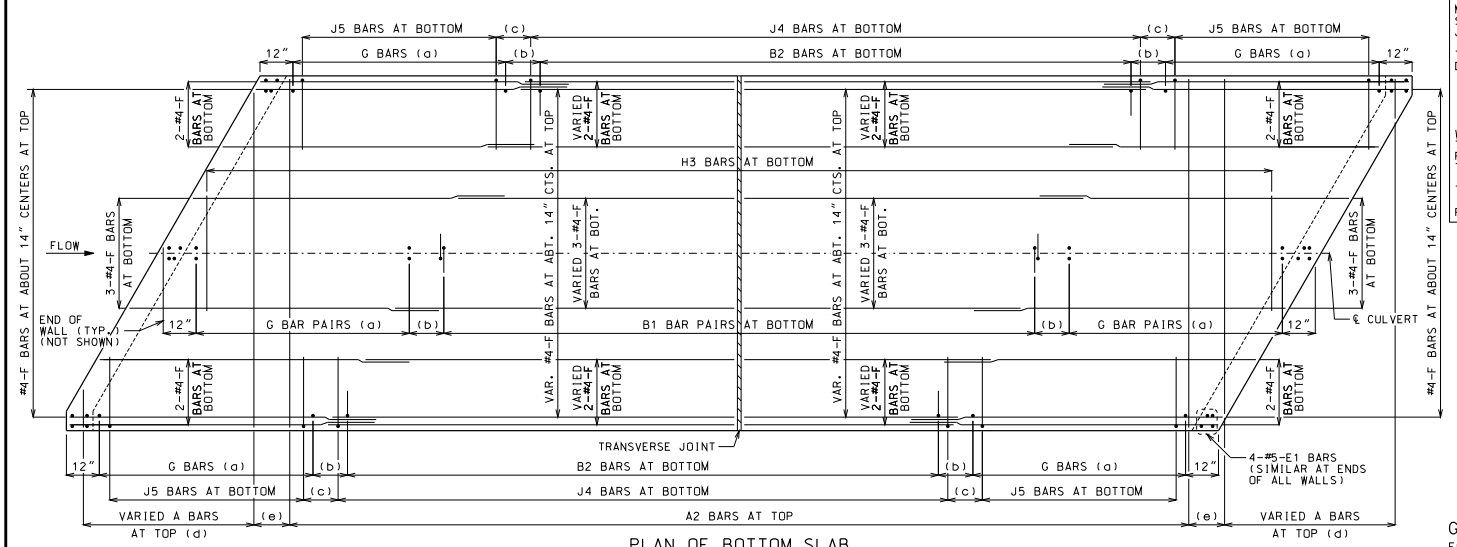


PLAN OF BOTTOM SLAB

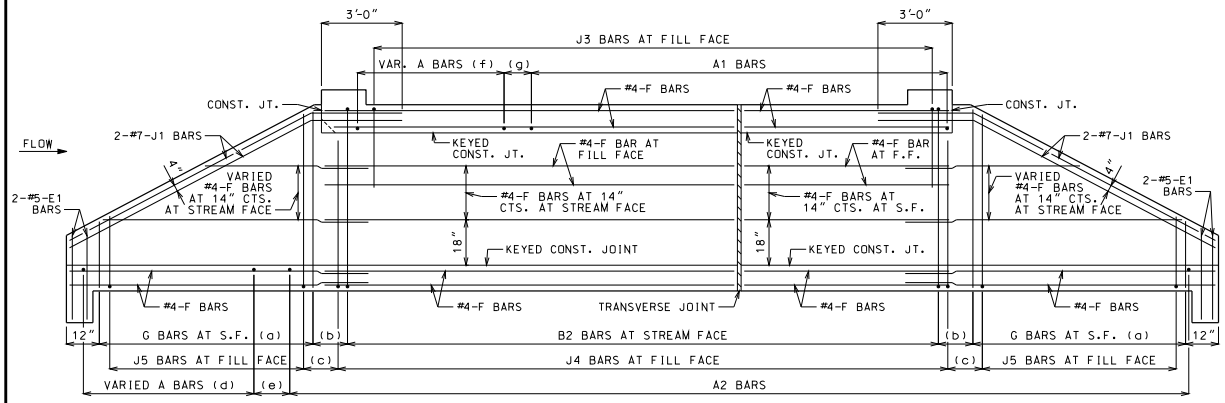


ELEVATION OF EXTERIOR WALL

J1 BARS MAY BE BENT IN FIELD OR SHOP.

## LAYING OUT TRANVERSE JOINTS

UNLESS SHOWN ON BRIDGE PLANS

USE A TRANSVERSE JOINT WHEN BARREL LENGTH IS OVER 80 FEET. USE ADDITIONAL JOINTS TO LIMIT CUT SECTION LENGTH AND END SECTION BARREL LENGTH MEASURED ALONG CENTERLINE OF CULVERT TO 50 FEET.

MINIMUM END SECTION LENGTH SHALL BE 3 FEET MEASURED ALONG THE SHORTEST WALL FROM THE INSIDE FACE OF HEADWALL TO THE TRANSVERSE JOINT.

TO AVOID LOCATING TRANSVERSE JOINTS UNDER A TRAVELED WAY WITH DESIGN FILLS 2 FEET OR LESS THE FOLLOWING SHALL APPLY:

BARREL LENGTH UP TO 90 FEET WITHOUT A TRANSVERSE JOINT

CUT SECTION LENGTHS UP TO 60 FEET

WHEN BARREL AND CUT SECTION LENGTH RESTRICTIONS REQUIRE TRANSVERSE JOINTS TO BE LOCATED UNDER A TRAVELED WAY WITH DESIGN FILLS 2 FEET OR LESS, THE JOINTS SHALL BE LOCATED TO MINIMIZE THE LENGTH OF JOINT UNDER THE TRAVELED WAY.

TRAVELED WAY IS THE ROADWAY WIDTH MINUS SHOULDER WIDTHS.

FOR CUT SECTION DETAILS, SEE 703.46.

## GENERAL NOTES:

FOR SECTIONS THRU BARREL, WINGS AND HEADWALLS, SEE SHEET 3 OF 3. FOR BAR SIZES, SPACING AND DIMENSIONS OF ALL REINFORCEMENT EXCEPT J5 BARS, SEE 703.47. FOR J5 BARS, SEE 703.37.

CONSTRUCTION JOINT KEY NOT SHOWN FOR CLARITY IN PLAN AND ELEVATION, SEE SHEET 3 OF 3 FOR DETAILS.

DRAWING NOT TO SCALE. FOLLOW DIMENSIONS.

MINIMUM CLEARANCE TO REINFORCING STEEL SHALL BE 1½".

LAP LONGITUDINAL BARS A MINIMUM OF 23" AT SPLICES.

BEVELED HEADWALL SHALL BE LOCATED AT UPSTREAM END.

(a) SAME SIZE AND SPACING AS ADJACENT B BARS

(b) VARIES, 12" MAXIMUM

(c) J4 BAR SPACING

(d) SAME SIZE AND SPACING AS A2 BARS

(e) A2 BAR SPACING

(f) SAME SIZE AND SPACING AS A1 BARS

(g) A1 BAR SPACING

MISSOURI HIGHWAYS AND TRANSPORTATION COMMISSION
105 WEST CAPITOL
JEFFERSON CITY, MO 65102
1-888-ASK-MODOT (1-888-275-6636)

STATE OF MISSOURI
DENNIS W. HECKMAN
NUMBER PE-27141
PROFESSIONAL ENGINEER
THIS SHEET HAS BEEN SIGNED, SEALED AND DATED ELECTRONICALLY.

# CONCRETE DOUBLE BOX CULVERT

SKEW: RIGHT ADVANCE
WINGS: STRAIGHT

REINFORCEMENT

DATE EFFECTIVE: 10/01/2011
DATE PREPARED: 9/8/2011

703.44H

SHEET NO. 1 OF 3

IF A SEAL IS PRESENT ON THIS SHEET IT HAS BEEN ELECTRONICALLY SEALED AND DATED.

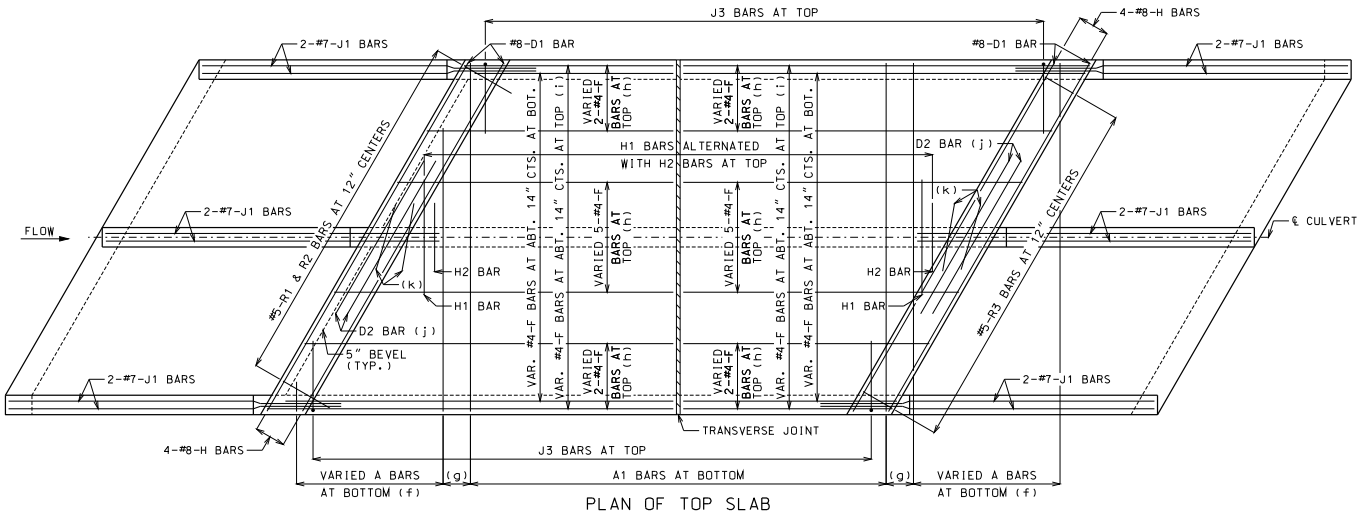


PLAN OF TOP SLAB

B BARS IN WALLS ARE NOT SHOWN FOR CLARITY.
FOR PLACEMENT. SEE SHEET 1 OF 3.

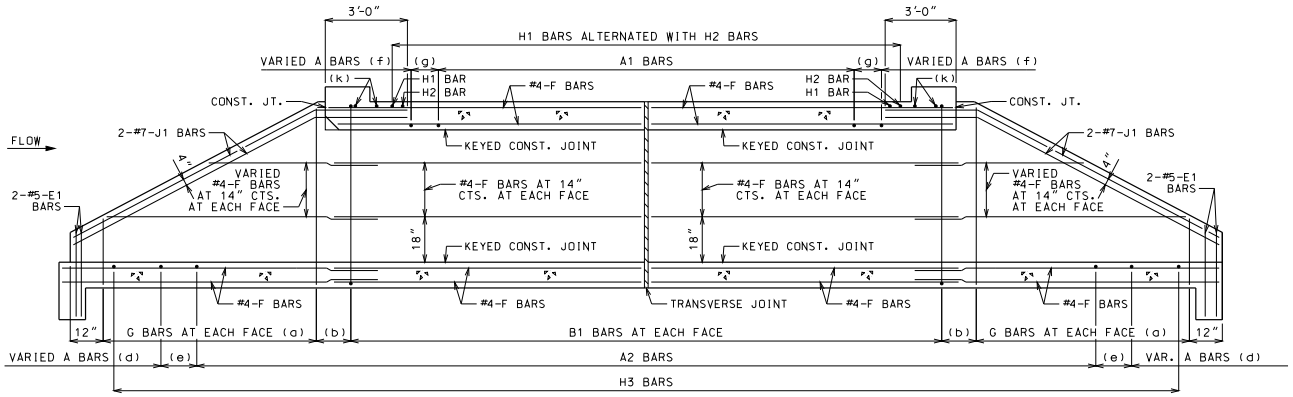


SECTION NEAR INTERIOR WALL

J1 BARS MAY BE BENT IN FIELD OR SHOP.

## GENERAL NOTES:

FOR SECTIONS THRU BARREL, WINGS AND HEADWALLS, SEE SHEET 3 OF 3. FOR BAR SIZES, SPACING AND DIMENSIONS OF ALL REINFORCEMENT EXCEPT J5 BARS, SEE 703.47. FOR J5 BARS, SEE 703.37.

CONSTRUCTION JOINT KEY NOT SHOWN FOR CLARITY IN PLAN AND SECTION. SEE SHEET 3 OF 3 FOR DETAILS.

DRAWING NOT TO SCALE. FOLLOW DIMENSIONS.

MINIMUM CLEARANCE TO REINFORCING STEEL SHALL BE 1½".

LAP LONGITUDINAL BARS A MINIMUM OF 23" AT SPLICES.

BEVELED HEADWALL SHALL BE LOCATED AT UPSTREAM END.

(a) SAME SIZE AND SPACING AS ADJACENT B BARS

(b) VARIES, 12" MAXIMUM

(c) NOT SPECIFIED ON THIS SHEET

(d) SAME SIZE AND SPACING AS A2 BARS

(e) A2 BAR SPACING

(f) SAME SIZE AND SPACING AS A1 BARS

(g) A1 BAR SPACING

(h) FOR DESIGN FILLS OVER 2'-0"

(i) FOR DESIGN FILLS 2'-0" OR LESS

(j) NOT REQUIRED FOR CLEAR SPANS ≤ 10'-0"
#8 FOR CLEAR SPAN > 10'-0"
#9 FOR CLEAR SPAN > 13'-0"

IF REQUIRED, THE MINIMUM LENGTH EACH SIDE OF ℄ WALL SHALL BE THE GREATER OF 48 BAR DIAMETERS OR ¼ CLEAR SPAN. THE CLEAR SPAN IS PARALLEL TO LONG DIRECTION OF HEADWALL.

(k) H2 BARS AS REQUIRED. QUANTITY OF BARS VARIES WITH SKEW.

MISSOURI HIGHWAYS AND TRANSPORTATION COMMISSION
105 WEST CAPITOL
JEFFERSON CITY, MO 65102
1-888-ASK-MODOT (1-888-275-6636)

STATE OF MISSOURI
DENNIS W. HECKMAN
NUMBER PE-27141
PROFESSIONAL ENGINEER
THIS SHEET HAS BEEN SIGNED, SEALED AND DATED ELECTRONICALLY.

# CONCRETE DOUBLE BOX CULVERT

SKEW: RIGHT ADVANCE
WINGS: STRAIGHT

REINFORCEMENT

DATE EFFECTIVE: 10/01/2011
DATE PREPARED: 9/8/2011

703.44H

SHEET NO. 2 OF 3

IF A SEAL IS PRESENT ON THIS SHEET IT HAS BEEN ELECTRONICALLY SEALED AND DATED.

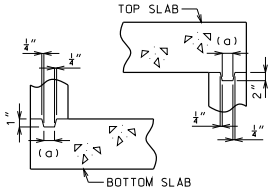


KEYED CONSTRUCTION JOINT

(a) APPROXIMATELY ONE-THIRD OF WALL THICKNESS

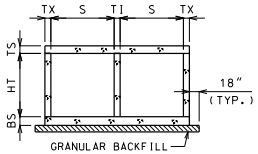


GRANULAR BACKFILL LIMITS AND MEMBER DIMENSIONS

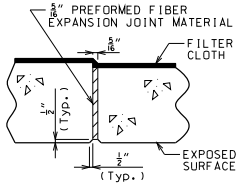


TRANSVERSE JOINT THRU BARREL

PREFORMED FIBER EXPANSION JOINT MATERIAL SHALL BE SECURELY STITCHED TO ONE FACE OF THE CONCRETE WITH NO. 10 GAGE COPPER WIRE OR NO. 12 GAGE SOFT DRAWN GALVANIZED STEEL WIRE.

FILTER CLOTH 3 FEET IN WIDTH AND DOUBLE THICKNESS SHALL BE CENTERED ON TRANSVERSE JOINTS IN TOP SLAB AND SIDEWALLS WITH EDGES SEALED WITH MASTIC OR TWO SIDED TAPE. FILTER CLOTH SHALL BE A SUBSURFACE DRAINAGE GEOTEXTILE IN ACCORDANCE WITH SECTION 1011 OF THE STANDARD SPECIFICATIONS FOR HIGHWAY CONSTRUCTION. COST OF FURNISHING AND INSTALLING FILTER CLOTH WILL BE CONSIDERED COMPLETELY COVERED BY THE CONTRACT UNIT PRICE FOR OTHER ITEMS.

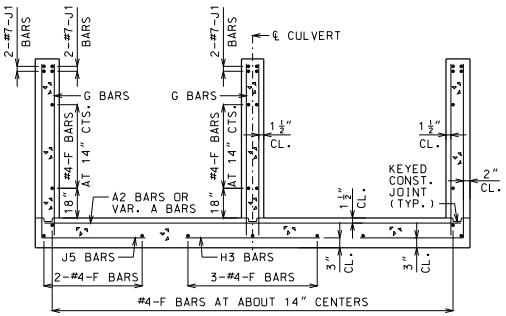


UPSTREAM AND DOWNSTREAM WINGS REINFORCEMENT

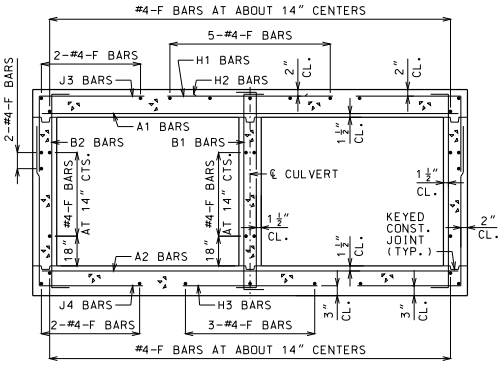


BARREL REINFORCEMENT

FOR DESIGN FILLS OVER 2'-0"

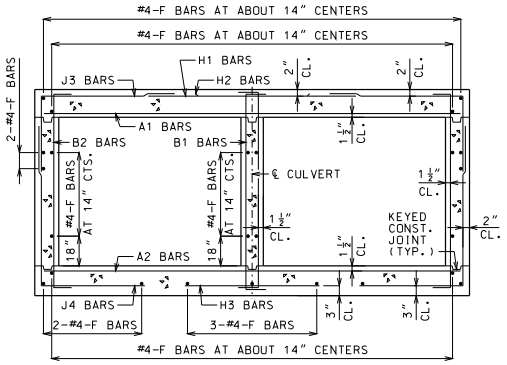


BARREL REINFORCEMENT

FOR DESIGN FILLS 2'-0" OR LESS

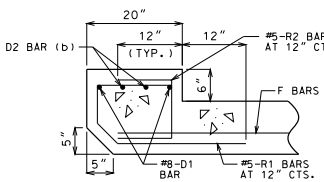


UPSTREAM HEADWALL REINFORCEMENT

NEAR INTERIOR WALL

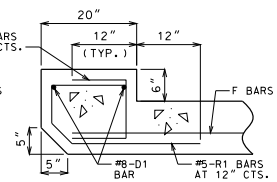


UPSTREAM HEADWALL REINFORCEMENT

NEAR MIDSPAN

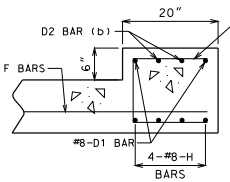


DOWNSTREAM HEADWALL REINFORCEMENT

NEAR INTERIOR WALL

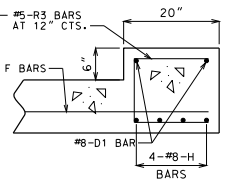


DOWNSTREAM HEADWALL REINFORCEMENT

NEAR MIDSPAN

(b) #8 FOR CLEAR SPAN > 10'-0"
#9 FOR CLEAR SPAN > 13'-0"
NOT REQUIRED FOR CLEAR SPANS ≤ 10'-0"

IF D2 BARS ARE REQUIRED, THE MINIMUM LENGTH EACH SIDE OF ℄ WALL SHALL BE THE GREATER OF 48 BAR DIAMETERS OR ¼ CLEAR SPAN. THE CLEAR SPAN IS PARALLEL TO LONG DIRECTION OF HEADWALL.

## GENERAL NOTES:

FOR MEMBER THICKNESS AND FOR BAR SIZES, SPACING AND DIMENSIONS OF ALL REINFORCEMENT EXCEPT J5 BARS, SEE 703.47. FOR J5 BARS, SEE 703.37.

BARREL AND WINGS SECTIONS ARE SYMMETRICAL ABOUT AND NORMAL TO ℄ CULVERT. HEADWALL SECTIONS ARE NORMAL TO LONG DIRECTION OF HEADWALL.

DRAWING NOT TO SCALE. FOLLOW DIMENSIONS.

MINIMUM CLEARANCE TO REINFORCING STEEL SHALL BE 1½".

MISSOURI HIGHWAYS AND TRANSPORTATION COMMISSION
105 WEST CAPITOL
JEFFERSON CITY, MO 65102
1-888-ASK-MODOT (1-888-275-6636)

STATE OF MISSOURI
DENNIS W. HECKMAN
NUMBER PE-27141
PROFESSIONAL ENGINEER
THIS SHEET HAS BEEN SIGNED, SEALED AND DATED ELECTRONICALLY.

# CONCRETE DOUBLE BOX CULVERT

SKEW: RIGHT ADVANCE
WINGS: STRAIGHT

SECTIONS

| DATE EFFECTIVE: | 10/01/2011 | 703.44H | SHEET NO. 3 OF 3 |
|---|---|---|---|
| DATE PREPARED: | 9/8/2011 | | |

IF A SEAL IS PRESENT ON THIS SHEET IT HAS BEEN ELECTRONICALLY SEALED AND DATED.

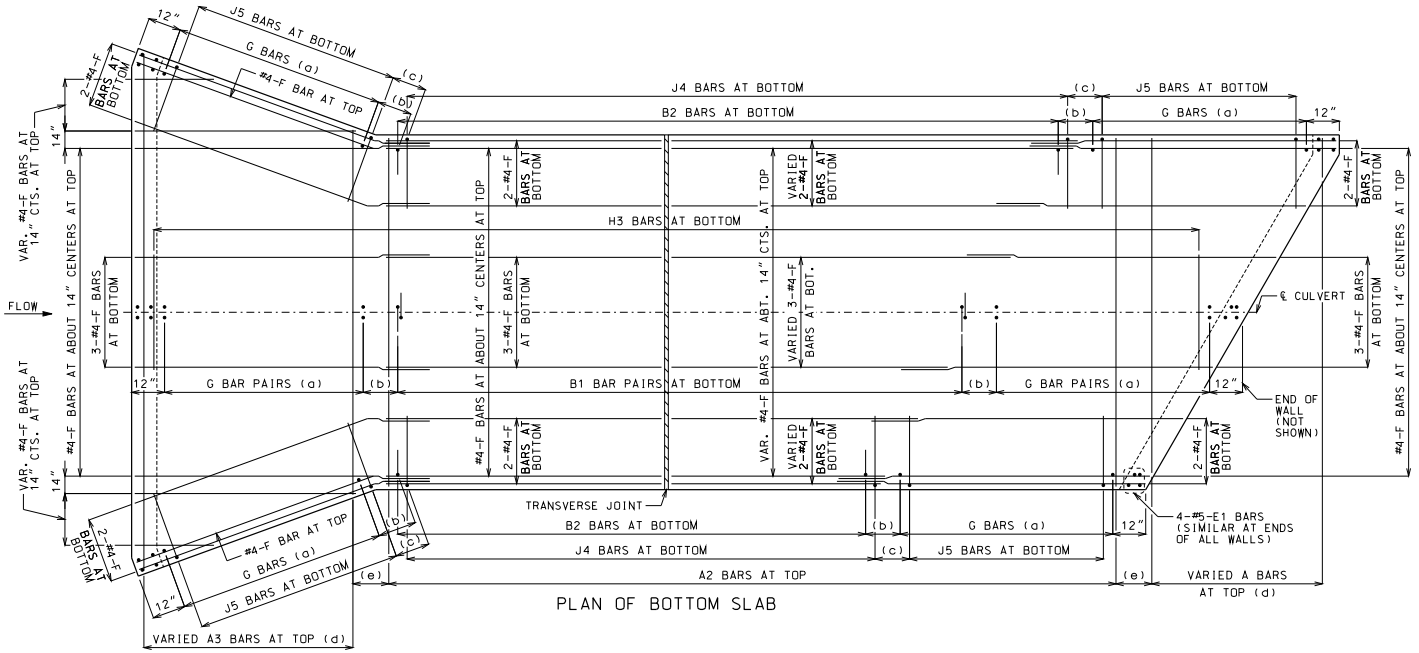


PLAN OF BOTTOM SLAB

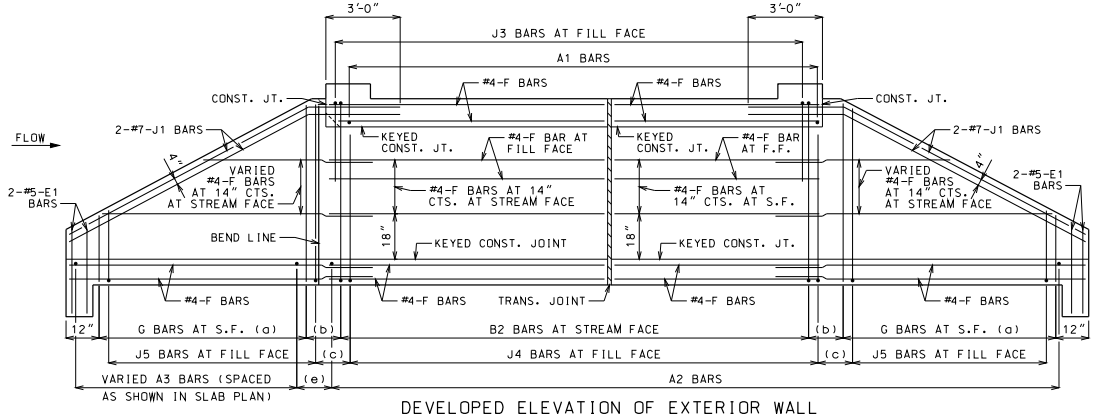


DEVELOPED ELEVATION OF EXTERIOR WALL

J1 BARS MAY BE BENT IN FIELD OR SHOP.

## LAYING OUT TRANVERSE JOINTS

UNLESS SHOWN ON BRIDGE PLANS

USE A TRANSVERSE JOINT WHEN BARREL LENGTH IS OVER 80 FEET. USE ADDITIONAL JOINTS TO LIMIT CUT SECTION LENGTH AND END SECTION BARREL LENGTH MEASURED ALONG CENTERLINE OF CULVERT TO 50 FEET.

MINIMUM END SECTION LENGTH SHALL BE 3 FEET MEASURED ALONG THE SHORTEST WALL FROM THE INSIDE FACE OF HEADWALL TO THE TRANSVERSE JOINT.

TO AVOID LOCATING TRANSVERSE JOINTS UNDER A TRAVELED WAY WITH DESIGN FILLS 2 FEET OR LESS THE FOLLOWING SHALL APPLY:

BARREL LENGTH UP TO 90 FEET WITHOUT A TRANSVERSE JOINT

CUT SECTION LENGTHS UP TO 60 FEET

WHEN BARREL AND CUT SECTION LENGTH RESTRICTIONS REQUIRE TRANSVERSE JOINTS TO BE LOCATED UNDER A TRAVELED WAY WITH DESIGN FILLS 2 FEET OR LESS, THE JOINTS SHALL BE LOCATED TO MINIMIZE THE LENGTH OF JOINT UNDER THE TRAVELED WAY.

TRAVELED WAY IS THE ROADWAY WIDTH MINUS SHOULDER WIDTHS.

FOR CUT SECTION DETAILS. SEE 703.46.

## GENERAL NOTES:

FOR SECTIONS THRU BARREL, WINGS AND HEADWALLS, SEE SHEET 3 OF 3. FOR BAR SIZES, SPACING AND DIMENSIONS OF ALL REINFORCEMENT EXCEPT J5 BARS, SEE 703.47. FOR J5 BARS, SEE 703.37.

CONSTRUCTION JOINT KEY NOT SHOWN FOR CLARITY IN PLAN AND ELEVATION, SEE SHEET 3 OF 3 FOR DETAILS.

DRAWING NOT TO SCALE. FOLLOW DIMENSIONS.

MINIMUM CLEARANCE TO REINFORCING STEEL SHALL BE 1½".

LAP LONGITUDINAL BARS A MINIMUM OF 23" AT SPLICES.

BEVELED HEADWALL SHALL BE LOCATED AT UPSTREAM END.

(a) SAME SIZE AND SPACING AS ADJACENT B BARS

(b) VARIES, 12" MAXIMUM

(c) J4 BAR SPACING

(d) SAME SIZE AND SPACING AS A2 BARS

(e) A2 BAR SPACING

MISSOURI HIGHWAYS AND TRANSPORTATION COMMISSION
105 WEST CAPITOL
JEFFERSON CITY, MO 65102
1-888-ASK-MODOT (1-888-275-6636)

STATE OF MISSOURI — DENNIS W. HECKMAN — NUMBER PE-27141 — PROFESSIONAL ENGINEER
THIS SHEET HAS BEEN SIGNED, SEALED AND DATED ELECTRONICALLY.

# CONCRETE DOUBLE BOX CULVERT

SKEW: RIGHT ADVANCE
WINGS: FLARED

REINFORCEMENT

| DATE EFFECTIVE: | 10/01/2011 | 703.45C | SHEET NO. 1 OF 3 |
|---|---|---|---|
| DATE PREPARED: | 9/8/2011 | | |

IF A SEAL IS PRESENT ON THIS SHEET IT HAS BEEN ELECTRONICALLY SEALED AND DATED.

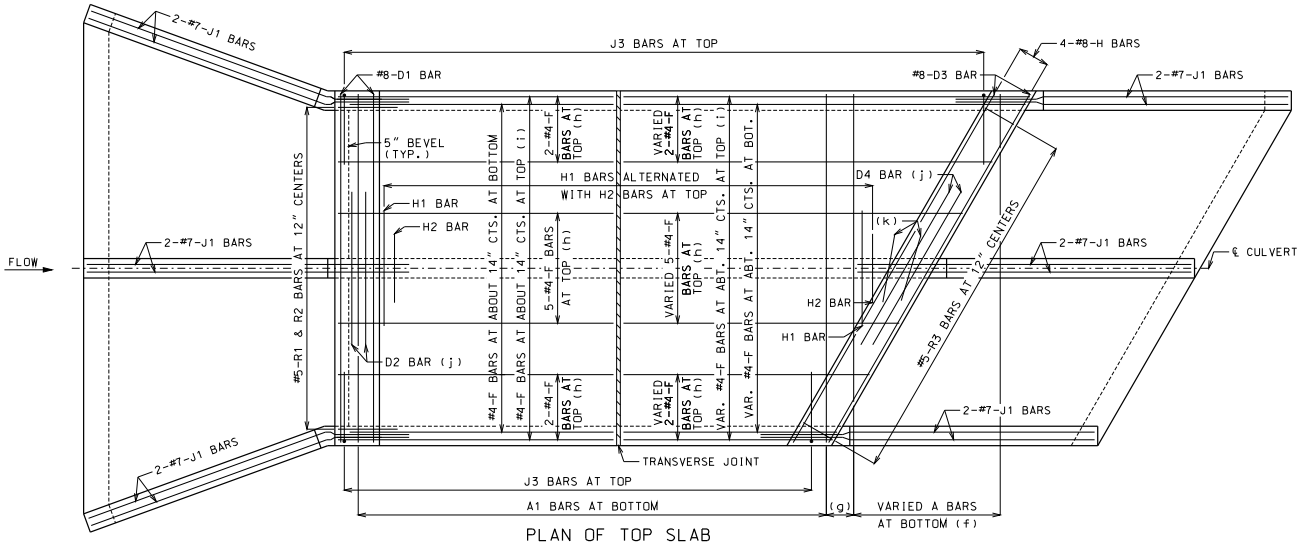


## PLAN OF TOP SLAB

B BARS IN WALLS ARE NOT SHOWN FOR CLARITY.
FOR PLACEMENT, SEE SHEET 1 OF 3.

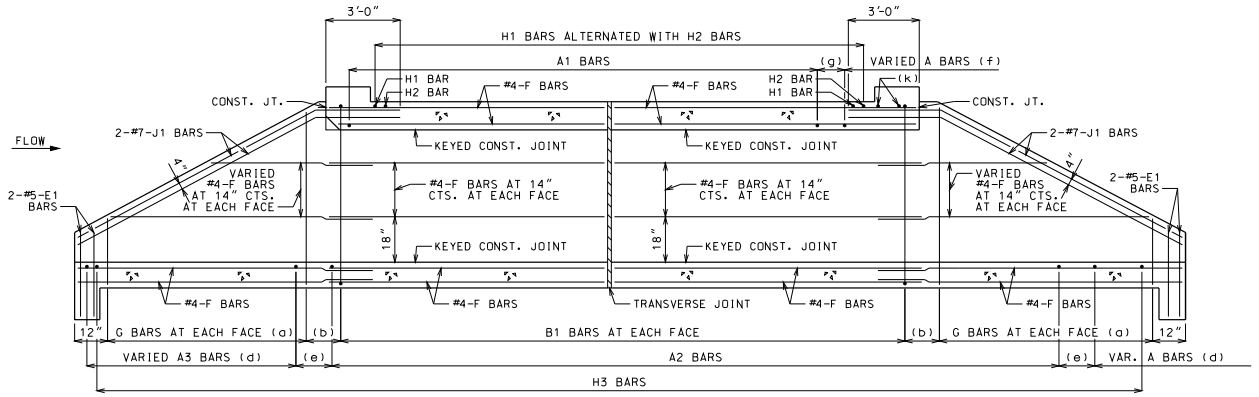


## SECTION NEAR INTERIOR WALL

J1 BARS MAY BE BENT IN FIELD OR SHOP.

## GENERAL NOTES:

FOR SECTIONS THRU BARREL, WINGS AND HEADWALLS, SEE SHEET 3 OF 3. FOR BAR SIZES, SPACING AND DIMENSIONS OF ALL REINFORCEMENT EXCEPT J5 BARS, SEE 703.47. FOR J5 BARS, SEE 703.37.

CONSTRUCTION JOINT KEY NOT SHOWN FOR CLARITY IN PLAN AND SECTION, SEE SHEET 3 OF 3 FOR DETAILS.

DRAWING NOT TO SCALE. FOLLOW DIMENSIONS.

MINIMUM CLEARANCE TO REINFORCING STEEL SHALL BE 1½".

LAP LONGITUDINAL BARS A MINIMUM OF 23" AT SPLICES.

BEVELED HEADWALL SHALL BE LOCATED AT UPSTREAM END.

(a) SAME SIZE AND SPACING AS ADJACENT B BARS

(b) VARIES, 12" MAXIMUM

(c) NOT SPECIFIED ON THIS SHEET

(d) SAME SIZE AND SPACING AS A2 BARS

(e) A2 BAR SPACING

(f) SAME SIZE AND SPACING AS A1 BARS

(g) A1 BAR SPACING

(h) FOR DESIGN FILLS OVER 2'-0"

(i) FOR DESIGN FILLS 2'-0" OR LESS

(j) NOT REQUIRED FOR CLEAR SPANS ≤ 10'-0"
#8 FOR CLEAR SPAN > 10'-0"
#9 FOR CLEAR SPAN > 13'-0"

IF REQUIRED, THE MINIMUM LENGTH EACH SIDE OF ℄ WALL SHALL BE THE GREATER OF 48 BAR DIAMETERS OR ¼ CLEAR SPAN. THE CLEAR SPAN IS PARALLEL TO LONG DIRECTION OF HEADWALL.

(k) H2 BARS AS REQUIRED. QUANTITY OF BARS VARIES WITH SKEW.

IF A SEAL IS PRESENT ON THIS SHEET IT HAS BEEN ELECTRONICALLY SEALED AND DATED.


MISSOURI HIGHWAYS AND TRANSPORTATION COMMISSION
105 WEST CAPITOL
JEFFERSON CITY, MO 65102
1-888-ASK-MODOT (1-888-275-6636)


STATE OF MISSOURI
DENNIS W. HECKMAN
NUMBER PE-27141
PROFESSIONAL ENGINEER
THIS SHEET HAS BEEN SIGNED, SEALED AND DATED ELECTRONICALLY.

# CONCRETE DOUBLE BOX CULVERT

SKEW: RIGHT ADVANCE
WINGS: FLARED

REINFORCEMENT

| DATE EFFECTIVE: | 10/01/2011 | 703.45C | SHEET NO. 2 OF 3 |
|---|---|---|---|
| DATE PREPARED: | 9/8/2011 | | |

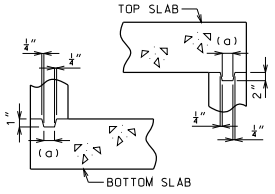


KEYED CONSTRUCTION JOINT

(a) APPROXIMATELY ONE-THIRD OF WALL THICKNESS

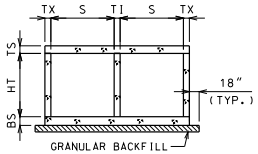


GRANULAR BACKFILL LIMITS AND MEMBER DIMENSIONS

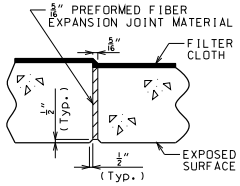


TRANSVERSE JOINT THRU BARREL

PREFORMED FIBER EXPANSION JOINT MATERIAL SHALL BE SECURELY STITCHED TO ONE FACE OF THE CONCRETE WITH NO. 10 GAGE COPPER WIRE OR NO. 12 GAGE SOFT DRAWN GALVANIZED STEEL WIRE.

FILTER CLOTH 3 FEET IN WIDTH AND DOUBLE THICKNESS SHALL BE CENTERED ON TRANSVERSE JOINTS IN TOP SLAB AND SIDEWALLS WITH EDGES SEALED WITH MASTIC OR TWO SIDED TAPE. FILTER CLOTH SHALL BE A SUBSURFACE DRAINAGE GEOTEXTILE IN ACCORDANCE WITH SECTION 1011 OF THE STANDARD SPECIFICATIONS FOR HIGHWAY CONSTRUCTION. COST OF FURNISHING AND INSTALLING FILTER CLOTH WILL BE CONSIDERED COMPLETELY COVERED BY THE CONTRACT UNIT PRICE FOR OTHER ITEMS.

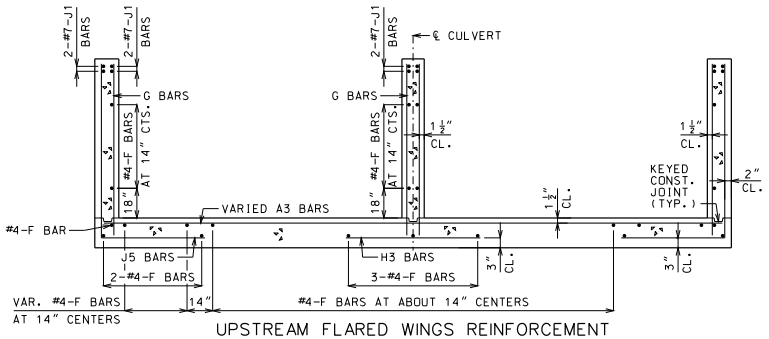


UPSTREAM FLARED WINGS REINFORCEMENT

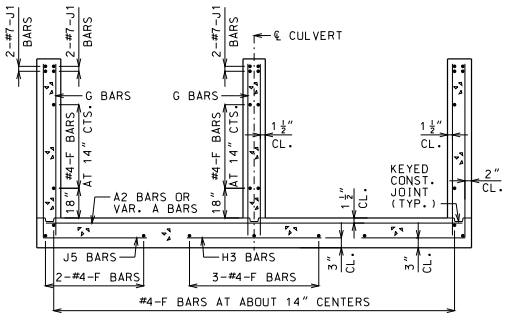


DOWNSTREAM WINGS REINFORCEMENT

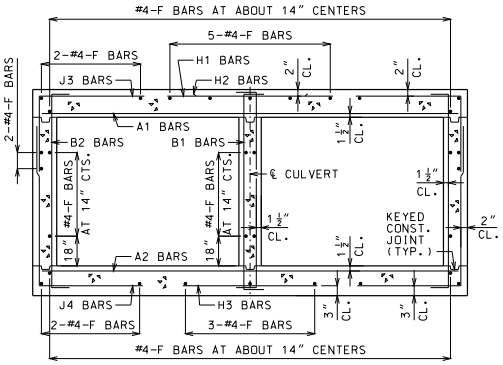


BARREL REINFORCEMENT

FOR DESIGN FILLS OVER 2'-0"

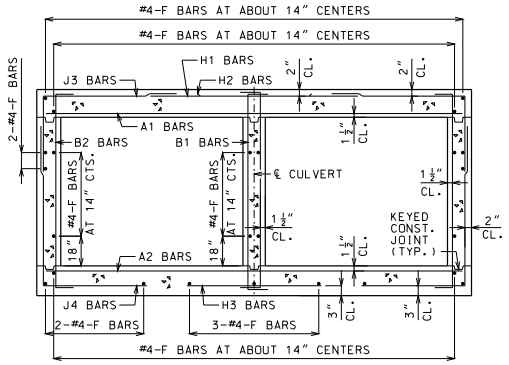


BARREL REINFORCEMENT

FOR DESIGN FILLS 2'-0" OR LESS

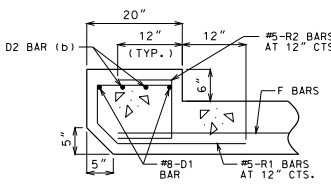


UPSTREAM HEADWALL REINFORCEMENT

NEAR INTERIOR WALL

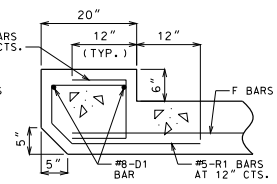


UPSTREAM HEADWALL REINFORCEMENT

NEAR MIDSPAN

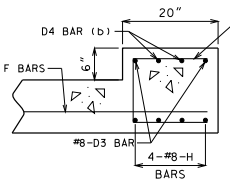


DOWNSTREAM HEADWALL REINFORCEMENT

NEAR INTERIOR WALL

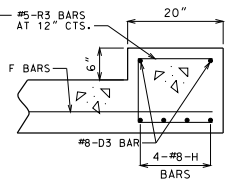


DOWNSTREAM HEADWALL REINFORCEMENT

NEAR MIDSPAN

(b) #8 FOR CLEAR SPAN > 10'-0"
#9 FOR CLEAR SPAN > 13'-0"
NOT REQUIRED FOR CLEAR SPANS ≤ 10'-0"

IF D2 AND D4 BARS ARE REQUIRED, THE MINIMUM LENGTH EACH SIDE OF ℄ WALL SHALL BE THE GREATER OF 48 BAR DIAMETERS OR ¼ CLEAR SPAN. THE CLEAR SPAN IS PARALLEL TO LONG DIRECTION OF HEADWALL.

GENERAL NOTES:

FOR MEMBER THICKNESS AND FOR BAR SIZES, SPACING AND DIMENSIONS OF ALL REINFORCEMENT EXCEPT J5 BARS, SEE 703.47. FOR J5 BARS, SEE 703.37.

BARREL AND WINGS SECTIONS ARE SYMMETRICAL ABOUT AND NORMAL TO ℄ CULVERT. HEADWALL SECTIONS ARE NORMAL TO LONG DIRECTION OF HEADWALL.

DRAWING NOT TO SCALE. FOLLOW DIMENSIONS.

MINIMUM CLEARANCE TO REINFORCING STEEL SHALL BE 1½".

MISSOURI HIGHWAYS AND TRANSPORTATION COMMISSION
105 WEST CAPITOL
JEFFERSON CITY, MO 65102
1-888-ASK-MODOT (1-888-275-6636)

STATE OF MISSOURI
DENNIS W. HECKMAN
NUMBER PE-27141
PROFESSIONAL ENGINEER
THIS SHEET HAS BEEN SIGNED, SEALED AND DATED ELECTRONICALLY.

# CONCRETE DOUBLE BOX CULVERT

SKEW: RIGHT ADVANCE
WINGS: FLARED

SECTIONS

| DATE EFFECTIVE: | 10/01/2011 | 703.45C | SHEET NO. 3 OF 3 |
|---|---|---|---|
| DATE PREPARED: | 9/8/2011 | | |

IF A SEAL IS PRESENT ON THIS SHEET IT HAS BEEN ELECTRONICALLY SEALED AND DATED.

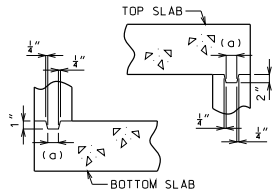


KEYED CONSTRUCTION JOINT

(a) APPROXIMATELY ONE-THIRD OF WALL THICKNESS

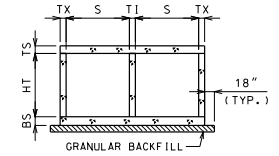


GRANULAR BACKFILL LIMITS AND MEMBER DIMENSIONS

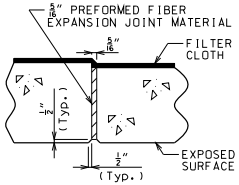


TRANSVERSE JOINT THRU BARREL

PREFORMED FIBER EXPANSION JOINT MATERIAL SHALL BE SECURELY STITCHED TO ONE FACE OF THE CONCRETE WITH NO. 10 GAGE COPPER WIRE OR NO. 12 GAGE SOFT DRAWN GALVANIZED STEEL WIRE.

FILTER CLOTH 3 FEET IN WIDTH AND DOUBLE THICKNESS SHALL BE CENTERED ON TRANSVERSE JOINTS IN TOP SLAB AND SIDEWALLS WITH EDGES SEALED WITH MASTIC OR TWO SIDED TAPE. FILTER CLOTH SHALL BE A SUBSURFACE DRAINAGE GEOTEXTILE IN ACCORDANCE WITH SECTION 1011 OF THE STANDARD SPECIFICATIONS FOR HIGHWAY CONSTRUCTION. COST OF FURNISHING AND INSTALLING FILTER CLOTH WILL BE CONSIDERED COMPLETELY COVERED BY THE CONTRACT UNIT PRICE FOR OTHER ITEMS.

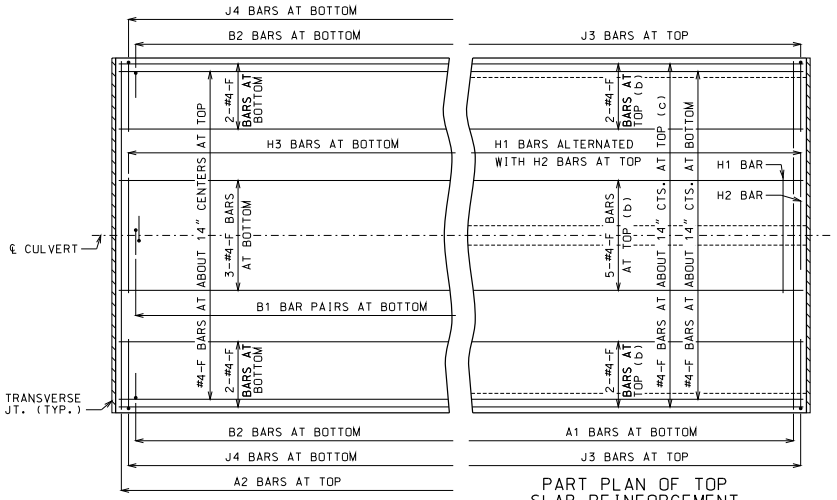


PART PLAN OF BOTTOM SLAB REINFORCEMENT




PART PLAN OF TOP SLAB REINFORCEMENT

(b) FOR DESIGN FILLS OVER 2'-0"
(c) FOR DESIGN FILLS 2'-0" OR LESS

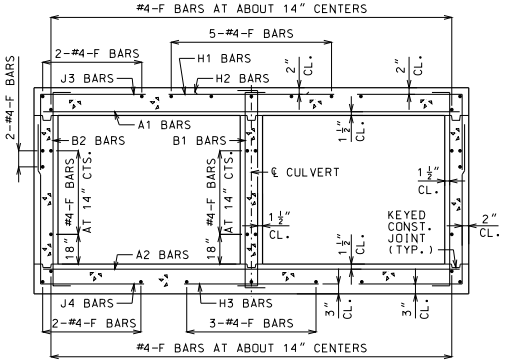


BARREL REINFORCEMENT

FOR DESIGN FILLS OVER 2'-0"
SYMMETRICAL ABOUT AND NORMAL TO ℄ CULVERT.

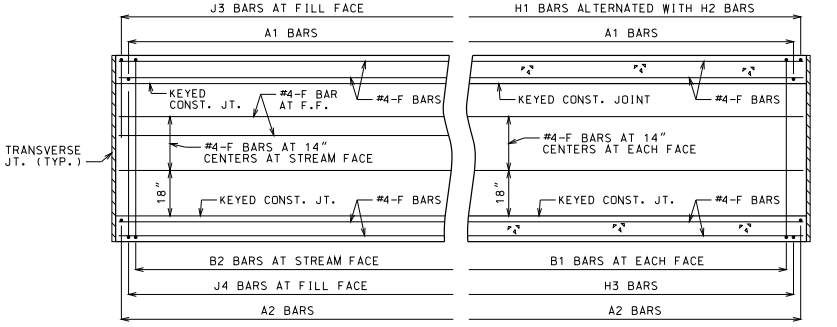


PART ELEVATION OF EXTERIOR WALL REINFORCEMENT

PART SECTION NEAR INTERIOR WALL REINFORCEMENT

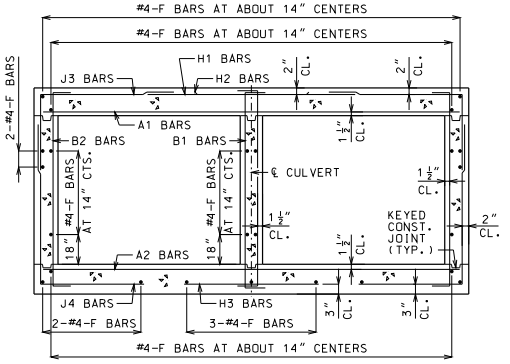


BARREL REINFORCEMENT

FOR DESIGN FILLS 2'-0" OR LESS
SYMMETRICAL ABOUT AND NORMAL TO ℄ CULVERT.

## GENERAL NOTES

DESIGN SPECIFICATIONS: 2010 AASHTO LRFD BRIDGE DESIGN SPECFICATIONS AND 2010 INTERIM REVISIONS

DESIGN UNIT STRESSES: CLASS B-1 CONCRETE f'c = 4,000 PSI
REINFORCING STEEL (GRADE 60) fy = 60,000 PSI

DESIGN LOADS: VEHICULAR = HL-93 MINUS LANE LOAD
EARTH = 120 LB/FT³
EQUIVALENT FLUID PRESSURE = 30 LB/FT³ (MIN.) - 60 LB/FT³ (MAX.)

FOR MEMBER THICKNESS AND FOR BAR SIZES, SPACING AND DIMENSIONS, SEE 703.47.

CONSTRUCTION JOINT KEY NOT SHOWN FOR CLARITY IN PART PLANS, PART ELEVATION AND PART SECTION.

DRAWING NOT TO SCALE. FOLLOW DIMENSIONS.

MINIMUM CLEARANCE TO REINFORCING STEEL SHALL BE 1½".

MISSOURI HIGHWAYS AND TRANSPORTATION COMMISSION
105 WEST CAPITOL
JEFFERSON CITY, MO 65102
1-888-ASK-MODOT (1-888-275-6636)

STATE OF MISSOURI
DENNIS W. HECKMAN
NUMBER PE-27141
PROFESSIONAL ENGINEER
THIS SHEET HAS BEEN SIGNED, SEALED AND DATED ELECTRONICALLY.

# CONCRETE DOUBLE BOX CULVERT

CUT SECTION

DATE EFFECTIVE: 10/01/2011
DATE PREPARED: 9/8/2011

703.46

SHEET NO. 1 OF 1

IF A SEAL IS PRESENT ON THIS SHEET IT HAS BEEN ELECTRONICALLY SEALED AND DATED.

## SPAN (S) = 3 FT  HEIGHT (HT) = 2 FT OR 3 FT OR 4 FT

| DESIGN FILL | MEMBER THICKNESS | | | | TOP SLAB BARS | | | | | | | | | | | | | BOTTOM SLAB BARS | | | | | | | | | | | | WALL BARS | | | | |
|---|---|---|---|---|---|---|---|---|---|---|---|---|---|---|---|---|---|---|---|---|---|---|---|---|---|---|---|---|---|---|---|---|---|---|
| | | | | | A1 BARS | | J3 BARS | | | | | H1 BARS | | | H2 BARS | | | A2 BARS | | J4 BARS | | | | | H3 BARS | | | B1 BARS | | B2 BARS | | |
| | | | | | | | | | | K2 | | | | | | | | | | | | K3 | | | | | | | | | |
| | TS | BS | TX | TI | SIZE | SPA. | SIZE | SPA. | C1 | HT=2′ | HT=3′ | HT=4′ | SIZE | SPA. | C5 | SIZE | SPA. | C6 | SIZE | SPA. | SIZE | SPA. | C4 | HT=2′ | HT=3′ | HT=4′ | SIZE | SPA. | C7 | SIZE | SPA. | SIZE | SPA. | G1 |
| 1 FT | 10 | 8 | 8 | 8 | 4 | 8.5 | 4 | 10.5 | 23.8 | 26.0 | 26.0 | 26.0 | 4 | 24 | 39.5 | 4 | 24 | 16.0 | 4 | 12 | 4 | 12 | 35.3 | 28 | 40 | 52 | 4 | 12 | 24.5 | 5 | 12 | 5 | 12 | 12 |
| 2 FT | 10 | 8 | 8 | 8 | 4 | 9 | 4 | 10.5 | 23.8 | 26.0 | 26.0 | 26.0 | 4 | 24 | 39.5 | 4 | 24 | 16.0 | 4 | 12 | 4 | 12 | 33.0 | 28 | 40 | 52 | 4 | 12 | 24.5 | 5 | 12 | 5 | 12 | 12 |
| 4 FT | 8 | 8 | 8 | 8 | 4 | 12 | 4 | 12 | 23.8 | 24.0 | 24.0 | 24.0 | 4 | 24 | 39.5 | 4 | 24 | 15.5 | 4 | 12 | 4 | 12 | 30.1 | 28 | 40 | 52 | 4 | 12 | 23.5 | 5 | 12 | 5 | 12 | 12 |
| 6 FT | 8 | 8 | 8 | 8 | 4 | 12 | 4 | 12 | 30.0 | 24.0 | 24.0 | 24.0 | 4 | 24 | 24.5 | 4 | 24 | 15.0 | 4 | 12 | 4 | 12 | 28.0 | 28 | 40 | 52 | 4 | 12 | 23.0 | 5 | 12 | 5 | 12 | 12 |
| 8 FT | 8 | 8 | 8 | 8 | 4 | 12 | 4 | 12 | 28.0 | 24.0 | 24.0 | 24.0 | 4 | 24 | 23.5 | 4 | 24 | 15.0 | 4 | 12 | 4 | 12 | 27.0 | 28 | 40 | 52 | 4 | 12 | 23.0 | 5 | 12 | 5 | 12 | 0 |
| 10 FT | 8 | 8 | 8 | 8 | 4 | 12 | 4 | 12 | 25.0 | 24.0 | 24.0 | 24.0 | 4 | 24 | 22.0 | 4 | 24 | 14.5 | 4 | 12 | 4 | 12 | 24.6 | 28 | 40 | 52 | 4 | 12 | 22.5 | 5 | 12 | 5 | 12 | 0 |
| 12 FT | 8 | 8 | 8 | 8 | 4 | 12 | 4 | 12 | 24.9 | 24.0 | 24.0 | 24.0 | 4 | 24 | 22.0 | 4 | 24 | 15.5 | 4 | 12 | 4 | 12 | 24.5 | 28 | 40 | 52 | 4 | 12 | 22.5 | 5 | 12 | 5 | 12 | 0 |
| 14 FT | 8 | 8 | 8 | 8 | 4 | 12 | 4 | 12 | 24.8 | 24.0 | 24.0 | 24.0 | 4 | 24 | 22.0 | 4 | 24 | 16.0 | 4 | 12 | 4 | 12 | 24.5 | 28 | 40 | 52 | 4 | 11.5 | 22.5 | 5 | 12 | 5 | 12 | 0 |
| 16 FT | 8 | 8 | 8 | 8 | 4 | 12 | 4 | 12 | 24.6 | 24.0 | 24.0 | 24.0 | 4 | 24 | 22.0 | 4 | 24 | 17.0 | 4 | 12 | 4 | 12 | 24.4 | 28 | 40 | 52 | 4 | 10.5 | 22.5 | 5 | 12 | 5 | 12 | 0 |
| 18 FT | 8 | 8 | 8 | 8 | 4 | 12 | 4 | 12 | 24.6 | 24.0 | 24.0 | 24.0 | 4 | 24 | 22.0 | 4 | 24 | 17.5 | 4 | 12 | 4 | 12 | 24.4 | 28 | 40 | 52 | 4 | 10 | 22.5 | 5 | 12 | 5 | 12 | 0 |
| 20 FT | 8 | 8 | 8 | 8 | 4 | 12 | 4 | 12 | 24.5 | 24.0 | 24.0 | 24.0 | 4 | 24 | 22.0 | 4 | 24 | 17.5 | 4 | 12 | 4 | 12 | 24.3 | 28 | 40 | 52 | 4 | 9.5 | 22.5 | 5 | 12 | 5 | 12 | 0 |
| 22 FT | 8 | 8 | 8 | 8 | 4 | 12 | 4 | 12 | 24.5 | 24.0 | 24.0 | 24.0 | 4 | 24 | 22.0 | 4 | 24 | 18.0 | 4 | 12 | 4 | 12 | 24.3 | 28 | 40 | 52 | 4 | 9 | 22.5 | 5 | 12 | 5 | 12 | 0 |
| 24 FT | 8 | 8 | 8 | 8 | 4 | 12 | 4 | 12 | 24.5 | 24.0 | 24.0 | 24.0 | 4 | 24 | 22.0 | 4 | 24 | 18.0 | 4 | 12 | 4 | 12 | 24.3 | 28 | 40 | 52 | 4 | 8.5 | 22.5 | 5 | 12 | 5 | 12 | 0 |
| 26 FT | 8 | 8 | 8 | 8 | 4 | 12 | 4 | 12 | 24.5 | 24.0 | 24.0 | 24.0 | 4 | 24 | 22.0 | 4 | 24 | 18.0 | 4 | 11 | 4 | 11 | 24.3 | 28 | 40 | 52 | 4 | 8 | 22.5 | 5 | 12 | 5 | 12 | 0 |
| 28 FT | 8 | 8 | 8 | 8 | 4 | 12 | 4 | 11 | 24.4 | 24.0 | 24.0 | 24.0 | 4 | 23 | 22.0 | 4 | 23 | 18.0 | 4 | 10.5 | 4 | 10.5 | 24.1 | 28 | 40 | 52 | 4 | 7.5 | 22.5 | 5 | 12 | 5 | 12 | 0 |
| 30 FT | 8 | 8 | 8 | 8 | 4 | 11.5 | 4 | 10.5 | 24.4 | 24.0 | 24.0 | 24.0 | 4 | 22 | 22.0 | 4 | 22 | 18.0 | 4 | 9 | 4 | 9.5 | 24.1 | 28 | 40 | 52 | 4 | 7.5 | 22.5 | 5 | 12 | 5 | 12 | 0 |
| 32 FT | 8 | 9 | 8 | 8 | 4 | 11 | 4 | 9.5 | 24.5 | 24.0 | 24.0 | 24.0 | 4 | 21 | 22.0 | 4 | 21 | 18.0 | 4 | 10.5 | 4 | 12 | 24.5 | 29 | 41 | 53 | 4 | 8 | 22.5 | 5 | 12 | 5 | 12 | 0 |
| 34 FT | 8 | 9 | 8 | 8 | 4 | 10.5 | 4 | 9 | 24.5 | 24.0 | 24.0 | 24.0 | 4 | 20 | 22.0 | 4 | 20 | 18.0 | 4 | 9.5 | 4 | 11.5 | 24.4 | 29 | 41 | 53 | 4 | 8 | 22.5 | 5 | 12 | 5 | 12 | 0 |
| 36 FT | 8 | 9 | 8 | 8 | 4 | 10 | 4 | 8.5 | 24.4 | 24.0 | 24.0 | 24.0 | 4 | 19 | 22.0 | 4 | 19 | 18.0 | 4 | 9 | 4 | 11 | 24.4 | 29 | 41 | 53 | 4 | 7.5 | 22.5 | 5 | 12 | 5 | 12 | 0 |
| 38 FT | 8 | 10 | 8 | 8 | 4 | 9.5 | 4 | 8 | 24.5 | 24.0 | 24.0 | 24.0 | 4 | 18 | 22.0 | 4 | 18 | 17.5 | 4 | 10 | 4 | 12 | 24.8 | 30 | 42 | 54 | 4 | 8.5 | 22.5 | 5 | 12 | 5 | 12 | 0 |
| 40 FT | 8 | 10 | 8 | 8 | 4 | 9 | 4 | 7.5 | 24.5 | 24.0 | 24.0 | 24.0 | 4 | 17 | 22.0 | 4 | 17 | 17.5 | 4 | 9.5 | 4 | 12 | 24.8 | 30 | 42 | 54 | 4 | 8 | 22.5 | 5 | 12 | 5 | 12 | 0 |
| 42 FT | 9 | 10 | 8 | 8 | 4 | 9 | 4 | 9 | 24.6 | 25.0 | 25.0 | 25.0 | 4 | 19 | 22.0 | 4 | 19 | 17.5 | 4 | 9 | 4 | 11.5 | 24.8 | 30 | 42 | 54 | 4 | 8 | 22.5 | 5 | 12 | 5 | 12 | 0 |
| 44 FT | 9 | 10 | 8 | 8 | 4 | 9 | 4 | 8.5 | 24.6 | 25.0 | 25.0 | 25.0 | 4 | 18 | 22.0 | 4 | 18 | 17.5 | 4 | 8.5 | 4 | 11 | 24.8 | 30 | 42 | 54 | 4 | 8 | 22.5 | 5 | 12 | 5 | 12 | 0 |
| 46 FT | 9 | 11 | 8 | 8 | 4 | 8.5 | 4 | 8 | 24.8 | 25.0 | 25.0 | 25.0 | 4 | 18 | 22.0 | 4 | 18 | 17.5 | 4 | 9 | 4 | 10.5 | 25.0 | 31 | 43 | 55 | 4 | 8.5 | 22.5 | 5 | 12 | 5 | 12 | 0 |
| 48 FT | 9 | 11 | 8 | 8 | 4 | 8 | 4 | 7.5 | 24.8 | 25.0 | 25.0 | 25.0 | 4 | 17 | 22.0 | 4 | 17 | 17.5 | 4 | 8.5 | 4 | 10.5 | 25.0 | 31 | 43 | 55 | 4 | 8 | 22.5 | 5 | 12 | 5 | 12 | 0 |
| 50 FT | 10 | 11 | 8 | 8 | 4 | 8.5 | 4 | 8 | 24.9 | 26.0 | 26.0 | 26.0 | 4 | 19 | 21.5 | 4 | 19 | 17.5 | 4 | 8.5 | 4 | 10.5 | 25.1 | 31 | 43 | 55 | 4 | 8 | 22.5 | 5 | 12 | 5 | 12 | 0 |

## SPAN (S) = 3 FT  HEIGHT (HT) = 5 FT OR 6 FT

| DESIGN FILL | MEMBER THICKNESS | | | | TOP SLAB BARS | | | | | | | | | | | | | BOTTOM SLAB BARS | | | | | | | | | | | | WALL BARS | | | | |
|---|---|---|---|---|---|---|---|---|---|---|---|---|---|---|---|---|---|---|---|---|---|---|---|---|---|---|---|---|---|---|---|---|---|---|
| | | | | | A1 BARS | | J3 BARS | | | | | H1 BARS | | | H2 BARS | | | A2 BARS | | J4 BARS | | | | | H3 BARS | | | B1 BARS | | B2 BARS | | |
| | | | | | | | | | | K2 | | | | | | | | | | | | K3 | | | | | | | | | |
| | TS | BS | TX | TI | SIZE | SPA. | SIZE | SPA. | C1 | HT=5′ | HT=6′ | SIZE | SPA. | C5 | SIZE | SPA. | C6 | SIZE | SPA. | SIZE | SPA. | C4 | HT=5′ | HT=6′ | SIZE | SPA. | C7 | SIZE | SPA. | SIZE | SPA. | G1 |
| 1 FT | 10 | 8 | 8 | 8 | 4 | 8.5 | 4 | 10.5 | 23.8 | 26.0 | 26.0 | 4 | 24 | 39.5 | 4 | 24 | 16.0 | 4 | 12 | 4 | 11.5 | 39.0 | 64 | 76 | 4 | 12 | 24.5 | 5 | 12 | 5 | 12 | 12 |
| 2 FT | 10 | 8 | 8 | 8 | 4 | 8.5 | 4 | 10.5 | 23.8 | 26.0 | 26.0 | 4 | 24 | 39.5 | 4 | 24 | 16.0 | 4 | 12 | 4 | 11 | 39.9 | 64 | 76 | 4 | 11.5 | 24.5 | 5 | 12 | 5 | 12 | 12 |
| 4 FT | 8 | 8 | 8 | 8 | 4 | 12 | 4 | 12 | 23.8 | 24.0 | 24.0 | 4 | 24 | 39.5 | 4 | 24 | 15.0 | 4 | 12 | 4 | 10 | 38.6 | 64 | 76 | 4 | 12 | 23.5 | 5 | 12 | 5 | 12 | 12 |
| 6 FT | 8 | 8 | 8 | 8 | 4 | 12 | 4 | 12 | 36.9 | 24.0 | 24.0 | 4 | 24 | 25.0 | 4 | 24 | 14.5 | 4 | 12 | 4 | 9.5 | 36.9 | 64 | 76 | 4 | 12 | 23.0 | 5 | 12 | 5 | 12 | 12 |
| 8 FT | 8 | 8 | 8 | 8 | 4 | 12 | 4 | 12 | 38.6 | 24.0 | 24.0 | 4 | 24 | 23.5 | 4 | 24 | 15.0 | 4 | 12 | 4 | 9 | 35.8 | 64 | 76 | 4 | 12 | 23.0 | 5 | 12 | 5 | 12 | 0 |
| 10 FT | 8 | 8 | 8 | 8 | 4 | 12 | 4 | 12 | 33.1 | 24.0 | 24.0 | 4 | 24 | 21.5 | 4 | 24 | 14.0 | 4 | 12 | 4 | 9.5 | 32.8 | 64 | 76 | 4 | 12 | 22.5 | 5 | 12 | 5 | 12 | 0 |
| 12 FT | 8 | 8 | 8 | 8 | 4 | 12 | 4 | 12 | 32.8 | 24.0 | 24.0 | 4 | 24 | 21.5 | 4 | 24 | 15.0 | 4 | 12 | 4 | 9 | 32.5 | 64 | 76 | 4 | 12 | 22.5 | 5 | 12 | 5 | 12 | 0 |
| 14 FT | 8 | 8 | 8 | 8 | 4 | 12 | 4 | 11 | 32.4 | 24.0 | 24.0 | 4 | 24 | 21.5 | 4 | 24 | 16.0 | 4 | 12 | 4 | 8.5 | 32.3 | 64 | 76 | 4 | 12 | 22.5 | 5 | 12 | 5 | 12 | 0 |
| 16 FT | 8 | 8 | 8 | 8 | 4 | 12 | 4 | 10 | 32.1 | 24.0 | 24.0 | 4 | 24 | 21.5 | 4 | 24 | 16.5 | 4 | 12 | 4 | 8 | 32.1 | 64 | 76 | 4 | 11.5 | 22.5 | 5 | 12 | 5 | 12 | 0 |
| 18 FT | 8 | 8 | 8 | 8 | 4 | 12 | 4 | 9 | 32.0 | 24.0 | 24.0 | 4 | 24 | 21.5 | 4 | 24 | 17.0 | 4 | 12 | 4 | 7.5 | 32.0 | 64 | 76 | 4 | 11 | 22.5 | 5 | 12 | 5 | 12 | 0 |
| 20 FT | 8 | 8 | 8 | 8 | 4 | 12 | 4 | 8 | 31.8 | 24.0 | 24.0 | 4 | 24 | 21.5 | 4 | 24 | 17.0 | 4 | 12 | 4 | 7 | 31.9 | 64 | 76 | 4 | 10 | 22.5 | 5 | 12 | 5 | 12 | 0 |
| 22 FT | 8 | 8 | 8 | 8 | 4 | 12 | 4 | 7.5 | 31.6 | 24.0 | 24.0 | 4 | 24 | 21.5 | 4 | 24 | 17.5 | 4 | 12 | 4 | 6.5 | 31.8 | 64 | 76 | 4 | 9.5 | 22.5 | 5 | 12 | 5 | 12 | 0 |
| 24 FT | 8 | 8 | 8 | 8 | 4 | 12 | 4 | 7 | 31.6 | 24.0 | 24.0 | 4 | 24 | 21.5 | 4 | 24 | 17.5 | 4 | 12 | 4 | 6 | 31.6 | 64 | 76 | 4 | 9.5 | 22.5 | 5 | 12 | 5 | 12 | 0 |
| 26 FT | 8 | 8 | 8 | 8 | 4 | 12 | 4 | 6.5 | 31.5 | 24.0 | 24.0 | 4 | 24 | 21.5 | 4 | 24 | 17.5 | 4 | 11.5 | 5 | 6.5 | 31.6 | 64 | 76 | 4 | 9 | 22.5 | 5 | 12 | 5 | 12 | 0 |
| 28 FT | 8 | 8 | 8 | 8 | 4 | 12 | 4 | 6 | 31.5 | 24.0 | 24.0 | 4 | 24 | 21.5 | 4 | 24 | 17.5 | 4 | 10.5 | 5 | 6 | 31.5 | 64 | 76 | 4 | 8.5 | 22.5 | 5 | 12 | 5 | 12 | 0 |
| 30 FT | 8 | 9 | 8 | 8 | 4 | 12 | 5 | 6.5 | 31.3 | 24.0 | 28.0 | 4 | 24 | 21.5 | 4 | 24 | 17.5 | 4 | 11.5 | 5 | 6.5 | 32.8 | 65 | 77 | 4 | 10 | 22.5 | 5 | 12 | 5 | 11.5 | 0 |
| 32 FT | 8 | 9 | 8 | 8 | 4 | 11 | 5 | 6 | 31.3 | 24.0 | 28.0 | 4 | 24 | 21.5 | 4 | 24 | 17.5 | 4 | 11 | 5 | 6 | 32.6 | 65 | 77 | 4 | 9.5 | 22.5 | 5 | 12 | 5 | 11 | 0 |
| 34 FT | 8 | 9 | 8 | 8 | 4 | 10.5 | 5 | 6 | 31.3 | 24.0 | 28.0 | 4 | 23 | 21.5 | 4 | 23 | 17.5 | 4 | 10 | 5 | 6 | 32.6 | 65 | 77 | 4 | 9 | 22.5 | 5 | 12 | 5 | 10.5 | 0 |
| 36 FT | 8 | 10 | 8 | 8 | 4 | 10 | 6 | 7.5 | 34.1 | 24.0 | 28.0 | 4 | 22 | 21.5 | 4 | 22 | 17.5 | 4 | 11 | 5 | 6 | 33.5 | 66 | 78 | 4 | 10.5 | 22.5 | 5 | 12 | 5 | 10 | 0 |
| 38 FT | 8 | 10 | 8 | 8 | 4 | 9.5 | 6 | 7.5 | 34.1 | 24.0 | 28.0 | 4 | 21 | 21.5 | 4 | 21 | 17.5 | 4 | 10.5 | 5 | 6 | 33.5 | 66 | 78 | 4 | 10 | 22.5 | 5 | 12 | 5 | 9.5 | 0 |
| 40 FT | 9 | 10 | 8 | 8 | 4 | 10 | 5 | 6 | 31.9 | 25.0 | 29.0 | 4 | 24 | 21.0 | 4 | 24 | 17.5 | 4 | 10 | 6 | 7 | 36.4 | 66 | 78 | 4 | 9.5 | 22.5 | 5 | 12 | 5 | 9.5 | 0 |
| 42 FT | 9 | 10 | 8 | 8 | 4 | 9.5 | 5 | 6 | 31.9 | 25.0 | 29.0 | 4 | 23 | 21.0 | 4 | 23 | 17.5 | 4 | 9.5 | 6 | 7 | 36.3 | 66 | 78 | 4 | 9 | 22.5 | 5 | 12 | 5 | 9.5 | 0 |
| 44 FT | 9 | 10 | 8 | 8 | 4 | 9 | 6 | 7 | 34.9 | 25.0 | 33.0 | 4 | 22 | 21.0 | 4 | 22 | 17.5 | 4 | 9 | 6 | 6.5 | 36.3 | 66 | 78 | 4 | 8.5 | 22.5 | 5 | 12 | 5 | 9.5 | 0 |
| 46 FT | 10 | 11 | 8 | 8 | 4 | 9.5 | 5 | 6 | 32.8 | 26.0 | 30.0 | 4 | 24 | 20.5 | 4 | 24 | 17.0 | 4 | 10 | 6 | 7 | 36.9 | 67 | 79 | 4 | 9.5 | 22.5 | 5 | 12 | 5 | 9.5 | 0 |
| 48 FT | 10 | 11 | 8 | 8 | 4 | 9 | 6 | 7 | 35.8 | 26.0 | 34.0 | 4 | 24 | 20.5 | 4 | 24 | 17.5 | 4 | 9.5 | 6 | 6.5 | 36.9 | 67 | 79 | 4 | 9 | 22.5 | 5 | 12 | 5 | 9.5 | 0 |
| 50 FT | 10 | 11 | 8 | 8 | 4 | 8.5 | 6 | 7 | 35.6 | 26.0 | 34.0 | 4 | 24 | 20.5 | 4 | 24 | 17.5 | 4 | 9 | 6 | 6.5 | 36.9 | 67 | 79 | 4 | 9 | 22.5 | 5 | 12 | 5 | 9.5 | 0 |

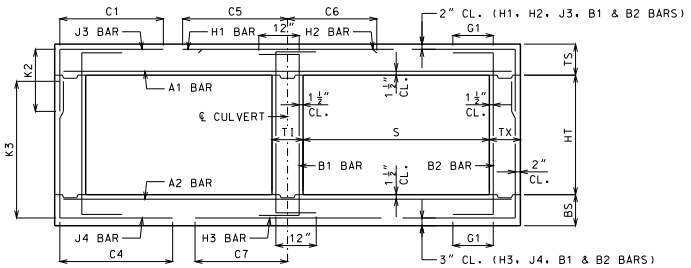


BAR DIMENSIONS DIAGRAM
SYMMETRICAL ABOUT ℄ CULVERT.

GENERAL NOTES:

IF DESIGN FILL IS BETWEEN TABULATED DESIGN FILLS, USE THE NEXT GREATER TABULATED DESIGN FILL, EXCEPT FOR DESIGN FILLS BETWEEN 2 FEET AND 4 FEET. FOR DESIGN FILLS BETWEEN 2 FEET AND 4 FEET USE THE GREATER MEMBER THICKNESS, AREA OF REINFORCEMENT AND BAR DIMENSIONS FROM THE 2 FEET AND 4 FEET TABULATED DESIGN FILLS. AREA OF REINFORCEMENT EQUALS BAR AREA PER FOOT SPACING.

SPECIAL DESIGNS ARE REQUIRED WHEN THE DESIGN FILL IS LESS THAN 1 FOOT OR GREATER THAN 50 FEET.

DIMENSIONS ARE IN INCHES UNLESS OTHERWISE SPECIFIED.

DESIGN FILLS ARE MEASURED FROM THE TOP OF TOP SLAB TO THE TOP OF EARTH FILL OR ROADWAY.

CULVERTS MEET STRENGTH AND SERVICEABILITY REQUIREMENTS FOR THE DESIGN VEHICULAR LIVE LOAD HL-93 MINUS THE LANE LOAD.


MISSOURI HIGHWAYS AND TRANSPORTATION COMMISSION
105 WEST CAPITOL
JEFFERSON CITY, MO 65102
1-888-ASK-MODOT (1-888-275-6636)


STATE OF MISSOURI
DENNIS W. HECKMANN
NUMBER PE-27141
PROFESSIONAL ENGINEER
THIS SHEET HAS BEEN SIGNED, SEALED AND DATED ELECTRONICALLY.

# CONCRETE DOUBLE BOX CULVERT

MEMBER THICKNESS
BAR SIZE, SPACING & DIMENSIONS

SPAN (S): 3 FEET
HEIGHT (HT): 2 THRU 6 FEET

DATE EFFECTIVE: 10/01/2011
DATE PREPARED: 9/8/2011

703.47

SHEET NO.
1 OF 27

IF A SEAL IS PRESENT ON THIS SHEET IT HAS BEEN ELECTRONICALLY SEALED AND DATED.

SPAN (S) = 4 FT  HEIGHT (HT) = 2 FT OR 3 FT

| DESIGN FILL | MEMBER THICKNESS | | | | TOP SLAB BARS | | | | | | | | | | | | BOTTOM SLAB BARS | | | | | | | | | | | WALL BARS | | | | |
|---|---|---|---|---|---|---|---|---|---|---|---|---|---|---|---|---|---|---|---|---|---|---|---|---|---|---|---|---|---|---|---|---|
| | | | | | A1 BARS | | J3 BARS | | | K2 | | H1 BARS | | | H2 BARS | | A2 BARS | | J4 BARS | | | K3 | | H3 BARS | | | B1 BARS | | B2 BARS | | |
| | TS | BS | TX | TI | SIZE | SPA. | SIZE | SPA. | C1 | HT=2′ | HT=3′ | SIZE | SPA. | C5 | SIZE | SPA. | C6 | SIZE | SPA. | SIZE | SPA. | C4 | HT=2′ | HT=3′ | SIZE | SPA. | C7 | SIZE | SPA. | SIZE | SPA. | G1 |
| 1 FT | 10 | 8 | 8 | 8 | 4 | 7 | 4 | 10.5 | 27.3 | 26.0 | 26.0 | 4 | 23 | 48.0 | 4 | 23 | 20.5 | 4 | 12 | 4 | 12 | 29.3 | 28 | 40 | 4 | 9.5 | 28.0 | 5 | 12 | 5 | 12 | 12 |
| 2 FT | 10 | 8 | 8 | 8 | 4 | 7 | 4 | 10.5 | 27.3 | 26.0 | 26.0 | 4 | 23 | 48.0 | 4 | 23 | 20.0 | 4 | 12 | 4 | 12 | 27.3 | 28 | 40 | 4 | 9 | 27.5 | 5 | 12 | 5 | 12 | 12 |
| 4 FT | 8 | 8 | 8 | 8 | 4 | 12 | 4 | 12 | 26.3 | 24.0 | 24.0 | 4 | 24 | 34.0 | 4 | 24 | 19.0 | 4 | 12 | 4 | 12 | 25.0 | 28 | 40 | 4 | 9.5 | 27.0 | 5 | 12 | 5 | 12 | 12 |
| 6 FT | 8 | 8 | 8 | 8 | 4 | 12 | 4 | 12 | 24.8 | 24.0 | 24.0 | 4 | 24 | 28.5 | 4 | 24 | 19.0 | 4 | 12 | 4 | 12 | 24.0 | 28 | 40 | 4 | 9.5 | 26.5 | 5 | 12 | 5 | 12 | 12 |
| 8 FT | 8 | 8 | 8 | 8 | 4 | 12 | 4 | 12 | 24.1 | 24.0 | 24.0 | 4 | 24 | 27.0 | 4 | 24 | 19.0 | 4 | 12 | 4 | 12 | 23.4 | 28 | 40 | 4 | 9 | 26.0 | 5 | 12 | 5 | 12 | 0 |
| 10 FT | 8 | 8 | 8 | 8 | 4 | 12 | 4 | 12 | 22.6 | 24.0 | 24.0 | 4 | 24 | 25.5 | 4 | 24 | 18.5 | 4 | 12 | 4 | 12 | 22.1 | 28 | 40 | 4 | 9 | 25.5 | 5 | 12 | 5 | 12 | 0 |
| 12 FT | 8 | 8 | 8 | 8 | 4 | 12 | 4 | 12 | 22.5 | 24.0 | 24.0 | 4 | 24 | 25.5 | 4 | 24 | 18.5 | 4 | 12 | 4 | 12 | 22.1 | 28 | 40 | 4 | 8 | 25.5 | 5 | 12 | 5 | 12 | 0 |
| 14 FT | 8 | 8 | 8 | 8 | 4 | 12 | 4 | 12 | 22.5 | 24.0 | 24.0 | 4 | 22 | 25.5 | 4 | 22 | 18.5 | 4 | 12 | 4 | 12 | 22.1 | 28 | 40 | 4 | 7.5 | 25.5 | 5 | 12 | 5 | 12 | 0 |
| 16 FT | 8 | 8 | 8 | 8 | 4 | 12 | 4 | 12 | 22.5 | 24.0 | 24.0 | 4 | 20 | 25.5 | 4 | 20 | 18.5 | 4 | 11 | 4 | 12 | 22.1 | 28 | 40 | 4 | 7 | 25.5 | 5 | 12 | 5 | 12 | 0 |
| 18 FT | 8 | 8 | 8 | 8 | 4 | 12 | 4 | 12 | 22.5 | 24.0 | 24.0 | 4 | 18 | 25.5 | 4 | 18 | 18.5 | 4 | 10 | 4 | 11.5 | 22.0 | 28 | 40 | 4 | 6.5 | 25.5 | 5 | 12 | 5 | 12 | 0 |
| 20 FT | 8 | 8 | 8 | 8 | 4 | 10.5 | 4 | 11.5 | 22.5 | 24.0 | 24.0 | 4 | 17 | 25.5 | 4 | 17 | 18.5 | 4 | 9 | 4 | 10.5 | 22.0 | 28 | 40 | 4 | 6 | 25.5 | 5 | 12 | 5 | 12 | 0 |
| 22 FT | 8 | 9 | 8 | 8 | 4 | 10 | 4 | 10.5 | 22.6 | 24.0 | 24.0 | 4 | 15 | 25.5 | 4 | 15 | 18.5 | 4 | 9 | 4 | 12 | 21.4 | 29 | 41 | 4 | 6.5 | 26.0 | 5 | 12 | 5 | 12 | 0 |
| 24 FT | 8 | 9 | 8 | 8 | 4 | 9 | 4 | 9.5 | 22.6 | 24.0 | 24.0 | 4 | 14 | 25.5 | 4 | 14 | 18.5 | 4 | 8.5 | 4 | 12 | 21.4 | 29 | 41 | 4 | 6 | 26.0 | 5 | 12 | 5 | 12 | 0 |
| 26 FT | 8 | 10 | 8 | 8 | 4 | 8.5 | 4 | 8.5 | 22.8 | 24.0 | 24.0 | 4 | 13 | 25.5 | 4 | 13 | 18.5 | 4 | 8.5 | 4 | 12 | 20.9 | 30 | 42 | 4 | 6.5 | 26.0 | 5 | 12 | 5 | 12 | 0 |
| 28 FT | 8 | 10 | 8 | 8 | 4 | 7.5 | 4 | 8 | 22.8 | 24.0 | 24.0 | 4 | 12 | 25.5 | 4 | 12 | 18.5 | 4 | 8 | 4 | 12 | 20.9 | 30 | 42 | 4 | 6.5 | 26.0 | 5 | 12 | 5 | 12 | 0 |
| 30 FT | 9 | 10 | 8 | 8 | 4 | 8 | 4 | 10.5 | 22.3 | 25.0 | 25.0 | 4 | 13 | 25.5 | 4 | 13 | 18.5 | 4 | 7.5 | 4 | 12 | 21.0 | 30 | 42 | 4 | 6 | 26.0 | 5 | 12 | 5 | 12 | 0 |
| 32 FT | 9 | 11 | 8 | 8 | 4 | 7.5 | 4 | 10 | 22.4 | 25.0 | 25.0 | 4 | 12 | 25.5 | 4 | 12 | 18.5 | 4 | 8 | 4 | 10.5 | 20.6 | 31 | 43 | 4 | 6.5 | 26.0 | 5 | 12 | 5 | 12 | 0 |
| 34 FT | 10 | 11 | 8 | 8 | 4 | 7.5 | 4 | 10.5 | 22.0 | 26.0 | 26.0 | 4 | 13 | 25.0 | 4 | 13 | 18.5 | 4 | 7.5 | 4 | 10.5 | 20.9 | 31 | 43 | 4 | 6 | 26.0 | 5 | 12 | 5 | 12 | 0 |
| 36 FT | 10 | 12 | 8 | 8 | 4 | 7.5 | 4 | 10 | 22.1 | 26.0 | 26.0 | 4 | 12 | 25.0 | 4 | 12 | 18.5 | 4 | 7.5 | 4 | 9.5 | 20.6 | 32 | 44 | 4 | 6.5 | 26.0 | 5 | 12 | 5 | 12 | 0 |
| 38 FT | 10 | 12 | 8 | 8 | 4 | 7 | 4 | 9.5 | 22.1 | 26.0 | 26.0 | 4 | 12 | 25.0 | 4 | 12 | 18.5 | 4 | 7.5 | 4 | 9.5 | 20.6 | 32 | 44 | 4 | 6 | 26.0 | 5 | 12 | 5 | 12 | 0 |
| 40 FT | 11 | 12 | 8 | 8 | 4 | 7 | 4 | 9.5 | 21.8 | 27.0 | 27.0 | 4 | 13 | 25.0 | 4 | 13 | 18.5 | 4 | 7 | 4 | 9.5 | 20.9 | 32 | 44 | 4 | 6 | 26.0 | 5 | 12 | 5 | 12 | 0 |
| 42 FT | 11 | 13 | 8 | 8 | 4 | 6.5 | 4 | 9.5 | 21.9 | 27.0 | 27.0 | 4 | 12 | 25.0 | 4 | 12 | 18.5 | 4 | 7 | 4 | 8.5 | 20.6 | 33 | 45 | 4 | 6 | 26.0 | 5 | 12 | 5 | 12 | 0 |
| 44 FT | 11 | 13 | 8 | 8 | 4 | 6.5 | 4 | 9 | 21.9 | 27.0 | 27.0 | 4 | 12 | 25.0 | 4 | 12 | 18.5 | 4 | 7 | 4 | 8.5 | 20.6 | 33 | 45 | 4 | 6 | 26.0 | 5 | 12 | 5 | 12 | 0 |
| 46 FT | 12 | 13 | 8 | 8 | 4 | 6.5 | 4 | 8.5 | 21.6 | 28.0 | 28.0 | 4 | 12 | 24.5 | 4 | 12 | 18.5 | 4 | 6.5 | 4 | 8.5 | 20.9 | 33 | 45 | 5 | 8.5 | 26.0 | 5 | 12 | 5 | 12 | 0 |
| 48 FT | 12 | 13 | 8 | 8 | 4 | 6.5 | 4 | 8.5 | 21.6 | 28.0 | 28.0 | 4 | 12 | 24.5 | 4 | 12 | 18.5 | 4 | 6 | 4 | 8.5 | 20.9 | 33 | 45 | 5 | 8.5 | 26.0 | 5 | 12 | 5 | 12 | 0 |
| 50 FT | 12 | 14 | 8 | 8 | 4 | 6 | 4 | 8.5 | 21.8 | 28.0 | 28.0 | 4 | 12 | 24.5 | 4 | 12 | 18.5 | 4 | 6.5 | 4 | 7.5 | 20.8 | 34 | 46 | 5 | 9 | 26.0 | 5 | 12 | 5 | 12 | 0 |

SPAN (S) = 4 FT  HEIGHT (HT) = 4 FT OR 5 FT

| DESIGN FILL | MEMBER THICKNESS | | | | TOP SLAB BARS | | | | | | | | | | | | BOTTOM SLAB BARS | | | | | | | | | | | WALL BARS | | | | |
|---|---|---|---|---|---|---|---|---|---|---|---|---|---|---|---|---|---|---|---|---|---|---|---|---|---|---|---|---|---|---|---|---|
| | | | | | A1 BARS | | J3 BARS | | | K2 | | H1 BARS | | | H2 BARS | | A2 BARS | | J4 BARS | | | K3 | | H3 BARS | | | B1 BARS | | B2 BARS | | |
| | TS | BS | TX | TI | SIZE | SPA. | SIZE | SPA. | C1 | HT=4′ | HT=5′ | SIZE | SPA. | C5 | SIZE | SPA. | C6 | SIZE | SPA. | SIZE | SPA. | C4 | HT=4′ | HT=5′ | SIZE | SPA. | C7 | SIZE | SPA. | SIZE | SPA. | G1 |
| 1 FT | 10 | 8 | 8 | 8 | 4 | 7 | 4 | 10.5 | 27.3 | 26.0 | 26.0 | 4 | 23 | 48.0 | 4 | 23 | 20.5 | 4 | 12 | 4 | 12 | 39.9 | 52 | 64 | 4 | 9 | 28.0 | 5 | 12 | 5 | 12 | 12 |
| 2 FT | 10 | 8 | 8 | 8 | 4 | 7 | 4 | 10.5 | 27.3 | 26.0 | 26.0 | 4 | 23 | 48.0 | 4 | 23 | 20.5 | 4 | 12 | 4 | 12 | 36.8 | 52 | 64 | 4 | 9 | 27.5 | 5 | 12 | 5 | 12 | 12 |
| 4 FT | 8 | 8 | 8 | 8 | 4 | 12 | 4 | 12 | 27.3 | 24.0 | 24.0 | 4 | 24 | 48.0 | 4 | 24 | 19.5 | 4 | 12 | 4 | 12 | 33.8 | 52 | 64 | 4 | 9 | 27.0 | 5 | 12 | 5 | 12 | 12 |
| 6 FT | 8 | 8 | 8 | 8 | 4 | 12 | 4 | 12 | 33.5 | 24.0 | 24.0 | 4 | 24 | 28.5 | 4 | 24 | 19.0 | 4 | 12 | 4 | 11.5 | 31.3 | 52 | 64 | 4 | 9 | 26.5 | 5 | 12 | 5 | 12 | 12 |
| 8 FT | 8 | 8 | 8 | 8 | 4 | 12 | 4 | 12 | 30.6 | 24.0 | 24.0 | 4 | 24 | 27.0 | 4 | 24 | 19.0 | 4 | 12 | 4 | 11 | 29.9 | 52 | 64 | 4 | 8.5 | 26.0 | 5 | 12 | 5 | 12 | 0 |
| 10 FT | 8 | 8 | 8 | 8 | 4 | 12 | 4 | 12 | 27.4 | 24.0 | 24.0 | 4 | 24 | 25.5 | 4 | 24 | 18.5 | 4 | 12 | 4 | 12 | 27.1 | 52 | 64 | 4 | 9 | 25.5 | 5 | 12 | 5 | 12 | 0 |
| 12 FT | 8 | 8 | 8 | 8 | 4 | 12 | 4 | 12 | 27.1 | 24.0 | 24.0 | 4 | 24 | 25.5 | 4 | 24 | 18.5 | 4 | 12 | 4 | 11 | 26.9 | 52 | 64 | 4 | 8 | 25.5 | 5 | 12 | 5 | 12 | 0 |
| 14 FT | 8 | 8 | 8 | 8 | 4 | 12 | 4 | 12 | 27.0 | 24.0 | 24.0 | 4 | 22 | 25.0 | 4 | 22 | 18.5 | 4 | 12 | 4 | 10.5 | 26.8 | 52 | 64 | 4 | 7.5 | 25.5 | 5 | 12 | 5 | 12 | 0 |
| 16 FT | 8 | 8 | 8 | 8 | 4 | 12 | 4 | 11 | 26.9 | 24.0 | 24.0 | 4 | 21 | 25.0 | 4 | 21 | 18.5 | 4 | 10.5 | 4 | 10 | 26.6 | 52 | 64 | 4 | 7 | 25.5 | 5 | 12 | 5 | 12 | 0 |
| 18 FT | 8 | 8 | 8 | 8 | 4 | 11.5 | 4 | 10 | 26.8 | 24.0 | 24.0 | 4 | 19 | 25.0 | 4 | 19 | 18.5 | 4 | 9.5 | 4 | 9 | 26.6 | 52 | 64 | 4 | 6.5 | 25.5 | 5 | 12 | 5 | 12 | 0 |
| 20 FT | 8 | 8 | 8 | 8 | 4 | 10.5 | 4 | 9 | 26.6 | 24.0 | 24.0 | 4 | 17 | 25.0 | 4 | 17 | 18.5 | 4 | 8.5 | 4 | 8 | 26.5 | 52 | 64 | 4 | 6 | 25.5 | 5 | 12 | 5 | 12 | 0 |
| 22 FT | 8 | 9 | 8 | 8 | 4 | 9.5 | 4 | 8 | 26.8 | 24.0 | 24.0 | 4 | 15 | 25.0 | 4 | 15 | 18.5 | 4 | 9 | 4 | 9.5 | 26.8 | 53 | 65 | 4 | 6.5 | 26.0 | 5 | 12 | 5 | 12 | 0 |
| 24 FT | 8 | 9 | 8 | 8 | 4 | 9 | 4 | 7.5 | 26.6 | 24.0 | 24.0 | 4 | 14 | 25.0 | 4 | 14 | 18.5 | 4 | 8.5 | 4 | 9 | 26.6 | 53 | 65 | 4 | 6.5 | 26.0 | 5 | 12 | 5 | 12 | 0 |
| 26 FT | 8 | 10 | 8 | 8 | 4 | 8.5 | 4 | 6.5 | 26.6 | 24.0 | 24.0 | 4 | 13 | 25.0 | 4 | 13 | 18.5 | 4 | 8.5 | 4 | 10.5 | 26.9 | 54 | 66 | 4 | 7 | 26.0 | 5 | 12 | 5 | 12 | 0 |
| 28 FT | 8 | 10 | 8 | 8 | 4 | 7.5 | 4 | 6 | 26.6 | 24.0 | 24.0 | 4 | 12 | 25.0 | 4 | 12 | 18.5 | 4 | 8 | 4 | 10 | 26.9 | 54 | 66 | 4 | 6.5 | 26.0 | 5 | 12 | 5 | 12 | 0 |
| 30 FT | 9 | 10 | 8 | 8 | 4 | 8 | 4 | 7.5 | 26.8 | 25.0 | 25.0 | 4 | 13 | 25.0 | 4 | 13 | 18.5 | 4 | 7 | 4 | 9 | 26.9 | 54 | 66 | 4 | 6 | 26.0 | 5 | 12 | 5 | 12 | 0 |
| 32 FT | 9 | 11 | 8 | 8 | 4 | 7.5 | 4 | 6.5 | 26.9 | 25.0 | 25.0 | 4 | 12 | 25.0 | 4 | 12 | 18.5 | 4 | 8 | 4 | 9 | 27.1 | 55 | 67 | 4 | 6.5 | 26.0 | 5 | 12 | 5 | 12 | 0 |
| 34 FT | 10 | 11 | 8 | 8 | 4 | 7.5 | 4 | 6.5 | 27.0 | 26.0 | 26.0 | 4 | 14 | 24.5 | 4 | 14 | 18.5 | 4 | 7.5 | 4 | 8.5 | 27.1 | 55 | 67 | 4 | 6 | 26.0 | 5 | 12 | 5 | 12 | 0 |
| 36 FT | 10 | 12 | 8 | 8 | 4 | 7.5 | 4 | 6.5 | 27.1 | 26.0 | 26.0 | 4 | 13 | 24.5 | 4 | 13 | 18.5 | 4 | 8 | 4 | 8.5 | 27.4 | 56 | 68 | 4 | 6.5 | 26.0 | 5 | 12 | 5 | 12 | 0 |
| 38 FT | 10 | 12 | 8 | 8 | 4 | 7 | 4 | 6 | 27.1 | 26.0 | 26.0 | 4 | 12 | 24.5 | 4 | 12 | 18.5 | 4 | 7.5 | 4 | 8 | 27.4 | 56 | 68 | 4 | 6 | 26.0 | 5 | 12 | 5 | 12 | 0 |
| 40 FT | 11 | 12 | 8 | 8 | 4 | 7 | 4 | 6 | 27.3 | 27.0 | 27.0 | 4 | 14 | 24.5 | 4 | 14 | 18.5 | 4 | 7 | 4 | 7.5 | 27.5 | 56 | 68 | 4 | 6 | 26.0 | 5 | 12 | 5 | 12 | 0 |
| 42 FT | 11 | 13 | 8 | 8 | 4 | 7 | 5 | 9 | 27.3 | 27.0 | 27.0 | 4 | 13 | 24.5 | 4 | 13 | 18.5 | 4 | 7.5 | 4 | 7.5 | 27.8 | 57 | 69 | 4 | 6 | 26.0 | 5 | 12 | 5 | 12 | 0 |
| 44 FT | 11 | 13 | 8 | 8 | 4 | 6.5 | 5 | 8.5 | 27.3 | 27.0 | 27.0 | 4 | 12 | 24.5 | 4 | 12 | 18.5 | 4 | 7 | 4 | 7.5 | 27.6 | 57 | 69 | 4 | 6 | 26.0 | 5 | 12 | 5 | 12 | 0 |
| 46 FT | 11 | 13 | 8 | 8 | 4 | 6 | 5 | 8.5 | 27.3 | 27.0 | 27.0 | 4 | 12 | 24.5 | 4 | 12 | 18.5 | 4 | 6.5 | 4 | 7 | 27.6 | 57 | 69 | 5 | 9 | 26.0 | 5 | 12 | 5 | 12 | 0 |
| 48 FT | 12 | 13 | 8 | 8 | 4 | 6.5 | 5 | 8.5 | 27.4 | 28.0 | 28.0 | 4 | 13 | 24.0 | 4 | 13 | 18.5 | 4 | 6.5 | 4 | 6.5 | 27.8 | 57 | 69 | 5 | 8.5 | 26.0 | 5 | 12 | 5 | 11.5 | 0 |
| 50 FT | 12 | 14 | 8 | 8 | 4 | 6 | 5 | 8.5 | 27.5 | 28.0 | 28.0 | 4 | 13 | 23.5 | 4 | 13 | 18.0 | 4 | 7 | 4 | 6.5 | 28.0 | 58 | 70 | 4 | 6 | 25.5 | 5 | 12 | 5 | 11 | 0 |

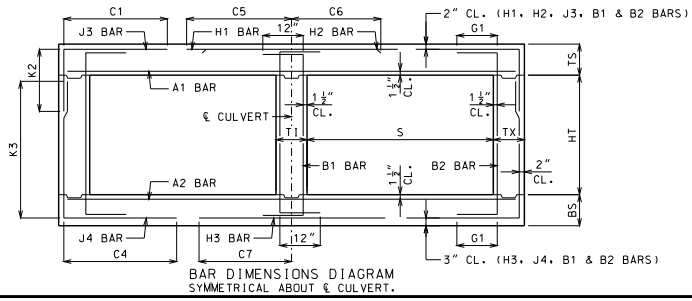


BAR DIMENSIONS DIAGRAM
SYMMETRICAL ABOUT ℄ CULVERT.

GENERAL NOTES:

IF DESIGN FILL IS BETWEEN TABULATED DESIGN FILLS, USE THE NEXT GREATER TABULATED DESIGN FILL, EXCEPT FOR DESIGN FILLS BETWEEN 2 FEET AND 4 FEET. FOR DESIGN FILLS BETWEEN 2 FEET AND 4 FEET USE THE GREATER MEMBER THICKNESS, AREA OF REINFORCEMENT AND BAR DIMENSIONS FROM THE 2 FEET AND 4 FEET TABULATED DESIGN FILLS. AREA OF REINFORCEMENT EQUALS BAR AREA PER FOOT SPACING.

SPECIAL DESIGNS ARE REQUIRED WHEN THE DESIGN FILL IS LESS THAN 1 FOOT OR GREATER THAN 50 FEET.

DIMENSIONS ARE IN INCHES UNLESS OTHERWISE SPECIFIED.

DESIGN FILLS ARE MEASURED FROM THE TOP OF TOP SLAB TO THE TOP OF EARTH FILL OR ROADWAY.

CULVERTS MEET STRENGTH AND SERVICEABILITY REQUIREMENTS FOR THE DESIGN VEHICULAR LIVE LOAD HL-93 MINUS THE LANE LOAD.


MISSOURI HIGHWAYS AND TRANSPORTATION COMMISSION
105 WEST CAPITOL
JEFFERSON CITY, MO 65102
1-888-ASK-MODOT (1-888-275-6636)


STATE OF MISSOURI
DENNIS W. HECKMANN
NUMBER PE-27141
PROFESSIONAL ENGINEER
THIS SHEET HAS BEEN SIGNED, SEALED AND DATED ELECTRONICALLY.

# CONCRETE DOUBLE BOX CULVERT

MEMBER THICKNESS
BAR SIZE, SPACING & DIMENSIONS

SPAN (S): 4 FEET
HEIGHT (HT): 2 THRU 5 FEET

DATE EFFECTIVE: 10/01/2011
DATE PREPARED: 9/8/2011

703.47

SHEET NO.
2 OF 27

IF A SEAL IS PRESENT ON THIS SHEET IT HAS BEEN ELECTRONICALLY SEALED AND DATED.

SPAN (S) = 4 FT  HEIGHT (HT) = 6 FT OR 7 FT

| DESIGN FILL | MEMBER THICKNESS | | | | TOP SLAB BARS | | | | | | | H1 BARS | | | H2 BARS | | | BOTTOM SLAB BARS | | | | | | | | H3 BARS | | | WALL BARS | | | | |
|---|---|---|---|---|---|---|---|---|---|---|---|---|---|---|---|---|---|---|---|---|---|---|---|---|---|---|---|---|---|---|---|---|
| | | | | | A1 BARS | | J3 BARS | | | K2 | | | | | | | | A2 BARS | | J4 BARS | | | K3 | | | | | | B1 BARS | | B2 BARS | | |
| | TS | BS | TX | TI | SIZE | SPA. | SIZE | SPA. | C1 | HT=6′ | HT=7′ | SIZE | SPA. | C5 | SIZE | SPA. | C6 | SIZE | SPA. | SIZE | SPA. | C4 | HT=6′ | HT=7′ | SIZE | SPA. | C7 | SIZE | SPA. | SIZE | SPA. | G1 |
| 1 FT | 10 | 8 | 8 | 8 | 4 | 6.5 | 4 | 10.5 | 27.3 | 26.0 | 26.0 | 4 | 24 | 48.0 | 4 | 24 | 20.5 | 4 | 12 | 4 | 8.5 | 46.6 | 76 | 88 | 4 | 8.5 | 28.0 | 5 | 12 | 5 | 12 | 12 |
| 2 FT | 10 | 8 | 8 | 8 | 4 | 6.5 | 4 | 10.5 | 27.3 | 26.0 | 26.0 | 4 | 23 | 48.0 | 4 | 23 | 20.5 | 4 | 12 | 4 | 8.5 | 45.3 | 76 | 88 | 4 | 8.5 | 27.5 | 5 | 12 | 5 | 12 | 12 |
| 4 FT | 8 | 8 | 8 | 8 | 4 | 12 | 4 | 10.5 | 27.3 | 24.0 | 24.0 | 4 | 24 | 48.0 | 4 | 24 | 19.5 | 4 | 12 | 4 | 7.5 | 43.0 | 76 | 88 | 4 | 9 | 27.0 | 5 | 12 | 5 | 12 | 12 |
| 6 FT | 8 | 8 | 8 | 8 | 4 | 12 | 4 | 10 | 47.3 | 24.0 | 24.0 | 4 | 24 | 28.5 | 4 | 24 | 19.0 | 4 | 12 | 4 | 7 | 40.8 | 76 | 88 | 4 | 9 | 26.5 | 5 | 12 | 5 | 12 | 12 |
| 8 FT | 8 | 8 | 8 | 8 | 4 | 12 | 4 | 9 | 41.4 | 24.0 | 24.0 | 4 | 24 | 27.0 | 4 | 24 | 19.0 | 4 | 12 | 4 | 6.5 | 39.0 | 76 | 88 | 4 | 8.5 | 26.0 | 5 | 12 | 5 | 12 | 0 |
| 10 FT | 8 | 8 | 8 | 8 | 4 | 12 | 4 | 10 | 35.4 | 24.0 | 24.0 | 4 | 24 | 25.0 | 4 | 24 | 18.5 | 4 | 12 | 4 | 7 | 35.1 | 76 | 88 | 4 | 8.5 | 25.5 | 5 | 12 | 5 | 12 | 0 |
| 12 FT | 8 | 8 | 8 | 8 | 4 | 12 | 4 | 8.5 | 34.9 | 24.0 | 24.0 | 4 | 24 | 25.0 | 4 | 24 | 18.5 | 4 | 12 | 4 | 6.5 | 34.9 | 76 | 88 | 4 | 8 | 25.5 | 5 | 12 | 5 | 12 | 0 |
| 14 FT | 8 | 8 | 8 | 8 | 4 | 12 | 4 | 7.5 | 34.6 | 24.0 | 24.0 | 4 | 23 | 25.0 | 4 | 23 | 18.5 | 4 | 12 | 4 | 6 | 34.6 | 76 | 88 | 4 | 7.5 | 25.5 | 5 | 12 | 5 | 12 | 0 |
| 16 FT | 8 | 8 | 8 | 8 | 4 | 12 | 4 | 6.5 | 34.4 | 24.0 | 24.0 | 4 | 22 | 25.0 | 4 | 22 | 18.5 | 4 | 10.5 | 5 | 6.5 | 34.4 | 76 | 88 | 4 | 7 | 25.5 | 5 | 12 | 5 | 12 | 0 |
| 18 FT | 8 | 8 | 8 | 8 | 4 | 12 | 4 | 6 | 34.1 | 24.0 | 24.0 | 4 | 19 | 25.0 | 4 | 19 | 18.5 | 4 | 9.5 | 5 | 6 | 34.3 | 76 | 88 | 4 | 6.5 | 25.5 | 5 | 12 | 5 | 12 | 0 |
| 20 FT | 8 | 9 | 9 | 8 | 4 | 11 | 4 | 6.5 | 33.6 | 24.0 | 24.0 | 4 | 18 | 24.5 | 4 | 18 | 18.5 | 4 | 10 | 4 | 6.5 | 34.9 | 77 | 89 | 4 | 7.5 | 25.5 | 5 | 12 | 5 | 12 | 0 |
| 22 FT | 8 | 9 | 9 | 8 | 4 | 10 | 4 | 6 | 33.5 | 24.0 | 24.0 | 4 | 16 | 25.0 | 4 | 16 | 18.5 | 4 | 9 | 4 | 6 | 34.8 | 77 | 89 | 4 | 7 | 25.5 | 5 | 12 | 5 | 12 | 0 |
| 24 FT | 8 | 9 | 9 | 8 | 4 | 9 | 5 | 6.5 | 33.4 | 24.0 | 28.0 | 4 | 15 | 25.0 | 4 | 15 | 18.5 | 4 | 8.5 | 5 | 7 | 34.6 | 77 | 89 | 4 | 6.5 | 25.5 | 5 | 12 | 5 | 12 | 0 |
| 26 FT | 8 | 10 | 9 | 8 | 4 | 8.5 | 5 | 6 | 33.1 | 24.0 | 24.0 | 4 | 14 | 24.5 | 4 | 14 | 18.5 | 4 | 9 | 4 | 6 | 35.5 | 78 | 90 | 4 | 7 | 26.0 | 5 | 12 | 5 | 11.5 | 0 |
| 28 FT | 8 | 10 | 9 | 8 | 4 | 8 | 6 | 7.5 | 36.1 | 24.0 | 28.0 | 4 | 13 | 24.5 | 4 | 13 | 18.5 | 4 | 8.5 | 5 | 7 | 35.5 | 78 | 90 | 4 | 6.5 | 26.0 | 5 | 12 | 5 | 10.5 | 0 |
| 30 FT | 9 | 10 | 9 | 8 | 4 | 8 | 5 | 6 | 34.0 | 25.0 | 29.0 | 4 | 14 | 24.5 | 4 | 14 | 18.5 | 4 | 7.5 | 5 | 6.5 | 35.3 | 78 | 90 | 4 | 6 | 25.5 | 5 | 12 | 5 | 10 | 0 |
| 32 FT | 9 | 11 | 9 | 8 | 4 | 8 | 5 | 6 | 33.9 | 25.0 | 29.0 | 4 | 13 | 24.5 | 4 | 13 | 18.5 | 4 | 8 | 5 | 6.5 | 35.9 | 79 | 91 | 4 | 6.5 | 26.0 | 5 | 12 | 5 | 9.5 | 0 |
| 34 FT | 9 | 11 | 9 | 8 | 4 | 7.5 | 5 | 6 | 33.9 | 25.0 | 29.0 | 4 | 13 | 24.5 | 4 | 13 | 18.5 | 4 | 7.5 | 5 | 6.5 | 35.9 | 79 | 91 | 4 | 6 | 26.0 | 5 | 12 | 5 | 9 | 0 |
| 36 FT | 10 | 11 | 9 | 8 | 4 | 7.5 | 5 | 6.5 | 34.6 | 26.0 | 30.0 | 4 | 14 | 24.0 | 4 | 14 | 18.0 | 4 | 7 | 5 | 6 | 35.8 | 79 | 91 | 4 | 6 | 25.5 | 5 | 12 | 5 | 8.5 | 0 |
| 38 FT | 10 | 12 | 9 | 8 | 4 | 7 | 5 | 6 | 34.5 | 26.0 | 30.0 | 4 | 14 | 24.0 | 4 | 14 | 18.0 | 4 | 7.5 | 5 | 6 | 36.3 | 80 | 92 | 4 | 6 | 25.5 | 5 | 12 | 5 | 8.5 | 0 |
| 40 FT | 10 | 12 | 9 | 8 | 4 | 7 | 5 | 6 | 34.5 | 26.0 | 30.0 | 4 | 13 | 24.0 | 4 | 13 | 18.0 | 4 | 7.5 | 5 | 6 | 36.3 | 80 | 92 | 4 | 6 | 25.5 | 5 | 12 | 5 | 8.5 | 0 |
| 42 FT | 11 | 12 | 9 | 8 | 4 | 7 | 5 | 6 | 35.1 | 31.0 | 31.0 | 4 | 14 | 23.5 | 4 | 14 | 18.0 | 4 | 6.5 | 6 | 7.5 | 39.1 | 80 | 92 | 5 | 9 | 25.5 | 5 | 12 | 5 | 8.5 | 0 |
| 44 FT | 11 | 13 | 10 | 8 | 4 | 6.5 | 5 | 7 | 35.1 | 27.0 | 31.0 | 4 | 14 | 23.0 | 4 | 14 | 18.0 | 4 | 7.5 | 5 | 7.5 | 36.8 | 81 | 93 | 4 | 6 | 25.5 | 5 | 12 | 5 | 8 | 0 |
| 46 FT | 11 | 13 | 10 | 8 | 4 | 6.5 | 5 | 6.5 | 35.0 | 27.0 | 31.0 | 4 | 13 | 23.0 | 4 | 13 | 18.0 | 4 | 7 | 5 | 7 | 36.8 | 81 | 93 | 5 | 9 | 26.0 | 5 | 12 | 5 | 8 | 0 |
| 48 FT | 11 | 13 | 10 | 8 | 4 | 6 | 5 | 6 | 35.0 | 27.0 | 31.0 | 4 | 13 | 23.0 | 4 | 13 | 18.0 | 4 | 6.5 | 5 | 6.5 | 36.8 | 81 | 93 | 5 | 8.5 | 25.5 | 5 | 12 | 5 | 8 | 0 |
| 50 FT | 12 | 14 | 11 | 8 | 4 | 6.5 | 5 | 7 | 35.6 | 28.0 | 32.0 | 4 | 15 | 23.0 | 4 | 15 | 18.0 | 4 | 7 | 5 | 7.5 | 37.3 | 82 | 94 | 5 | 9 | 26.0 | 5 | 12 | 5 | 8 | 0 |

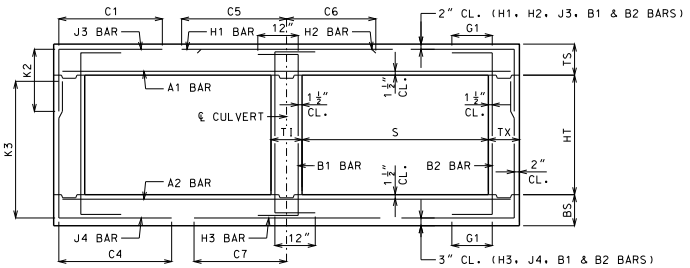


BAR DIMENSIONS DIAGRAM
SYMMETRICAL ABOUT ℄ CULVERT.

GENERAL NOTES:

IF DESIGN FILL IS BETWEEN TABULATED DESIGN FILLS, USE THE NEXT GREATER TABULATED DESIGN FILL, EXCEPT FOR DESIGN FILLS BETWEEN 2 FEET AND 4 FEET. FOR DESIGN FILLS BETWEEN 2 FEET AND 4 FEET USE THE GREATER MEMBER THICKNESS, AREA OF REINFORCEMENT AND BAR DIMENSIONS FROM THE 2 FEET AND 4 FEET TABULATED DESIGN FILLS. AREA OF REINFORCEMENT EQUALS BAR AREA PER FOOT SPACING.

SPECIAL DESIGNS ARE REQUIRED WHEN THE DESIGN FILL IS LESS THAN 1 FOOT OR GREATER THAN 50 FEET.

DIMENSIONS ARE IN INCHES UNLESS OTHERWISE SPECIFIED.

DESIGN FILLS ARE MEASURED FROM THE TOP OF TOP SLAB TO THE TOP OF EARTH FILL OR ROADWAY.

CULVERTS MEET STRENGTH AND SERVICEABILITY REQUIREMENTS FOR THE DESIGN VEHICULAR LIVE LOAD HL-93 MINUS THE LANE LOAD.


MISSOURI HIGHWAYS AND TRANSPORTATION COMMISSION
105 WEST CAPITOL
JEFFERSON CITY, MO 65102
1-888-ASK-MODOT (1-888-275-6636)


STATE OF MISSOURI
DENNIS W. HECKMANN
NUMBER PE-27141
PROFESSIONAL ENGINEER
THIS SHEET HAS BEEN SIGNED, SEALED AND DATED ELECTRONICALLY.

# CONCRETE DOUBLE BOX CULVERT

MEMBER THICKNESS
BAR SIZE, SPACING & DIMENSIONS

SPAN (S): 4 FEET
HEIGHT (HT): 6 THRU 7 FEET

DATE EFFECTIVE: 10/01/2011
DATE PREPARED: 9/8/2011

703.47

SHEET NO.
3 OF 27

IF A SEAL IS PRESENT ON THIS SHEET IT HAS BEEN ELECTRONICALLY SEALED AND DATED.

SPAN (S) = 5 FT  HEIGHT (HT) = 3 FT OR 4 FT

| DESIGN FILL | MEMBER THICKNESS | | | | TOP SLAB BARS | | | | | | | | | | | | BOTTOM SLAB BARS | | | | | | | | | | WALL BARS | | | | |
|---|---|---|---|---|---|---|---|---|---|---|---|---|---|---|---|---|---|---|---|---|---|---|---|---|---|---|---|---|---|---|---|
| | | | | | A1 BARS | | J3 BARS | | | | | H1 BARS | | | H2 BARS | | | A2 BARS | | J4 BARS | | | | | H3 BARS | | | B1 BARS | | B2 BARS | | |
| | | | | | | | | | | K2 | | | | | | | | | | | K3 | | | | | | | | | | |
| | TS | BS | TX | TI | SIZE | SPA. | SIZE | SPA. | C1 | HT=3′ | HT=4′ | SIZE | SPA. | C5 | SIZE | SPA. | C6 | SIZE | SPA. | SIZE | SPA. | C4 | HT=3′ | HT=4′ | SIZE | SPA. | C7 | SIZE | SPA. | SIZE | SPA. | G1 |
| 1 FT | 11 | 8 | 8 | 8 | 4 | 6.5 | 4 | 9.5 | 30.9 | 27.0 | 27.0 | 4 | 20 | 56.0 | 4 | 20 | 21.5 | 4 | 12 | 4 | 12 | 33.3 | 40 | 52 | 4 | 7.5 | 31.0 | 5 | 12 | 5 | 12 | 12 |
| 2 FT | 11 | 8 | 8 | 8 | 4 | 6.5 | 4 | 9.5 | 30.9 | 27.0 | 27.0 | 4 | 19 | 56.0 | 4 | 19 | 21.5 | 4 | 11.5 | 4 | 11.5 | 31.0 | 40 | 52 | 4 | 7 | 31.0 | 5 | 12 | 5 | 12 | 12 |
| 4 FT | 8 | 8 | 8 | 8 | 4 | 11 | 4 | 12 | 30.0 | 24.0 | 24.0 | 4 | 18 | 39.0 | 4 | 18 | 20.0 | 4 | 12 | 4 | 12 | 28.4 | 40 | 52 | 4 | 7 | 30.0 | 5 | 12 | 5 | 12 | 12 |
| 6 FT | 8 | 8 | 8 | 8 | 4 | 12 | 4 | 12 | 27.4 | 24.0 | 24.0 | 4 | 19 | 32.0 | 4 | 19 | 20.0 | 4 | 11.5 | 4 | 12 | 26.9 | 40 | 52 | 4 | 7 | 29.5 | 5 | 12 | 5 | 12 | 12 |
| 8 FT | 8 | 8 | 8 | 8 | 4 | 12 | 4 | 12 | 26.6 | 24.0 | 24.0 | 4 | 18 | 30.5 | 4 | 18 | 19.5 | 4 | 10.5 | 4 | 11.5 | 26.0 | 40 | 52 | 4 | 6.5 | 29.0 | 5 | 12 | 5 | 12 | 0 |
| 10 FT | 8 | 8 | 8 | 8 | 4 | 11 | 4 | 12 | 26.1 | 24.0 | 24.0 | 4 | 16 | 29.5 | 4 | 16 | 19.5 | 4 | 9.5 | 4 | 10.5 | 25.5 | 40 | 52 | 4 | 6 | 29.0 | 5 | 12 | 5 | 12 | 0 |
| 12 FT | 8 | 8 | 8 | 8 | 4 | 12 | 4 | 12 | 24.6 | 24.0 | 24.0 | 4 | 16 | 28.5 | 4 | 16 | 19.0 | 4 | 9.5 | 4 | 11 | 24.4 | 40 | 52 | 5 | 7.5 | 28.5 | 5 | 12 | 5 | 12 | 0 |
| 14 FT | 8 | 8 | 8 | 8 | 4 | 10 | 4 | 11 | 24.6 | 24.0 | 24.0 | 4 | 14 | 28.5 | 4 | 14 | 19.0 | 4 | 8.5 | 4 | 10 | 24.3 | 40 | 52 | 5 | 7 | 28.5 | 5 | 12 | 5 | 12 | 0 |
| 16 FT | 8 | 9 | 8 | 8 | 4 | 9 | 4 | 9.5 | 24.8 | 24.0 | 24.0 | 4 | 12 | 28.5 | 4 | 12 | 19.0 | 4 | 8.5 | 4 | 12 | 23.5 | 41 | 53 | 5 | 7.5 | 29.0 | 5 | 12 | 5 | 12 | 0 |
| 18 FT | 8 | 9 | 8 | 8 | 4 | 8 | 4 | 8.5 | 24.8 | 24.0 | 24.0 | 5 | 17 | 28.5 | 5 | 17 | 19.5 | 4 | 7.5 | 4 | 11.5 | 23.5 | 41 | 53 | 5 | 7 | 29.0 | 5 | 12 | 5 | 12 | 0 |
| 20 FT | 8 | 10 | 8 | 8 | 4 | 7.5 | 4 | 7.5 | 24.9 | 24.0 | 24.0 | 5 | 17 | 28.0 | 5 | 17 | 20.0 | 4 | 7.5 | 4 | 12 | 22.9 | 42 | 54 | 5 | 7.5 | 29.0 | 5 | 12 | 5 | 12 | 0 |
| 22 FT | 9 | 10 | 8 | 8 | 4 | 7 | 4 | 9 | 24.3 | 25.0 | 25.0 | 5 | 16 | 28.5 | 5 | 16 | 19.0 | 4 | 7 | 4 | 12 | 23.1 | 42 | 54 | 5 | 7 | 29.0 | 5 | 12 | 5 | 12 | 0 |
| 24 FT | 9 | 11 | 8 | 8 | 4 | 6.5 | 4 | 8 | 24.5 | 25.0 | 25.0 | 5 | 16 | 28.5 | 5 | 16 | 20.0 | 4 | 7 | 4 | 10.5 | 22.8 | 43 | 55 | 5 | 7.5 | 29.0 | 5 | 12 | 5 | 12 | 0 |
| 26 FT | 10 | 11 | 8 | 8 | 4 | 6.5 | 4 | 8.5 | 24.0 | 26.0 | 26.0 | 5 | 16 | 28.5 | 5 | 16 | 19.0 | 4 | 6.5 | 4 | 10.5 | 23.0 | 43 | 55 | 5 | 7 | 29.0 | 5 | 12 | 5 | 12 | 0 |
| 28 FT | 10 | 12 | 8 | 8 | 4 | 6.5 | 4 | 8 | 24.1 | 26.0 | 26.0 | 5 | 15 | 28.0 | 5 | 15 | 19.5 | 4 | 6.5 | 4 | 9.5 | 22.6 | 44 | 56 | 5 | 7.5 | 29.0 | 5 | 12 | 5 | 12 | 0 |
| 30 FT | 11 | 12 | 8 | 8 | 4 | 6.5 | 4 | 8.5 | 23.8 | 27.0 | 27.0 | 5 | 15 | 28.0 | 5 | 15 | 19.0 | 4 | 6 | 4 | 9.5 | 22.9 | 44 | 56 | 5 | 7 | 29.0 | 5 | 12 | 5 | 12 | 0 |
| 32 FT | 11 | 13 | 8 | 8 | 4 | 6 | 4 | 7.5 | 23.9 | 27.0 | 27.0 | 5 | 15 | 28.0 | 5 | 15 | 19.0 | 4 | 6.5 | 4 | 8.5 | 22.8 | 45 | 57 | 5 | 7.5 | 29.0 | 5 | 12 | 5 | 12 | 0 |
| 34 FT | 12 | 13 | 8 | 8 | 4 | 6 | 4 | 8.5 | 23.6 | 28.0 | 28.0 | 5 | 15 | 28.0 | 5 | 15 | 19.0 | 4 | 6 | 4 | 8.5 | 22.9 | 45 | 57 | 5 | 7 | 29.0 | 5 | 12 | 5 | 12 | 0 |
| 36 FT | 12 | 14 | 8 | 8 | 5 | 9 | 4 | 7.5 | 23.8 | 28.0 | 28.0 | 5 | 15 | 28.0 | 5 | 15 | 19.0 | 4 | 6 | 4 | 7.5 | 22.8 | 46 | 58 | 5 | 7.5 | 29.0 | 5 | 12 | 5 | 12 | 0 |
| 38 FT | 13 | 14 | 8 | 8 | 5 | 9 | 4 | 7.5 | 23.5 | 29.0 | 29.0 | 5 | 15 | 27.5 | 5 | 15 | 19.0 | 4 | 6 | 4 | 7.5 | 23.0 | 46 | 58 | 5 | 7 | 29.0 | 5 | 12 | 5 | 12 | 0 |
| 40 FT | 13 | 15 | 8 | 8 | 5 | 8.5 | 4 | 7.5 | 23.8 | 29.0 | 29.0 | 5 | 15 | 27.5 | 5 | 15 | 19.0 | 4 | 6 | 4 | 7 | 22.9 | 47 | 59 | 5 | 7.5 | 29.0 | 5 | 12 | 5 | 12 | 0 |
| 42 FT | 13 | 15 | 8 | 8 | 5 | 8 | 4 | 7 | 23.8 | 29.0 | 29.0 | 5 | 14 | 27.5 | 5 | 14 | 19.0 | 5 | 9 | 4 | 7 | 22.9 | 47 | 59 | 5 | 7 | 29.0 | 5 | 12 | 5 | 12 | 0 |
| 44 FT | 14 | 15 | 8 | 8 | 5 | 8.5 | 4 | 7 | 23.5 | 30.0 | 30.0 | 5 | 15 | 27.0 | 5 | 15 | 19.0 | 5 | 8.5 | 4 | 7 | 23.1 | 47 | 59 | 5 | 6.5 | 29.0 | 5 | 12 | 5 | 12 | 0 |
| 46 FT | 14 | 16 | 8 | 8 | 5 | 8 | 4 | 7 | 23.6 | 30.0 | 30.0 | 5 | 14 | 27.0 | 5 | 14 | 19.0 | 5 | 9 | 4 | 6.5 | 23.1 | 48 | 60 | 5 | 7 | 29.0 | 5 | 12 | 5 | 12 | 0 |
| 48 FT | 14 | 16 | 8 | 8 | 5 | 7.5 | 4 | 6.5 | 23.6 | 30.0 | 30.0 | 5 | 14 | 27.0 | 5 | 14 | 19.0 | 5 | 8.5 | 4 | 6.5 | 23.1 | 48 | 60 | 5 | 6.5 | 29.0 | 5 | 12 | 5 | 12 | 0 |
| 50 FT | 15 | 16 | 8 | 8 | 5 | 7.5 | 4 | 6.5 | 25.6 | 31.0 | 31.0 | 5 | 15 | 31.5 | 5 | 15 | 24.0 | 5 | 8 | 4 | 6.5 | 23.3 | 48 | 60 | 5 | 6.5 | 29.0 | 5 | 12 | 5 | 12 | 0 |

SPAN (S) = 5 FT  HEIGHT (HT) = 5 FT OR 6 FT

| DESIGN FILL | MEMBER THICKNESS | | | | TOP SLAB BARS | | | | | | | | | | | | BOTTOM SLAB BARS | | | | | | | | | | WALL BARS | | | | |
|---|---|---|---|---|---|---|---|---|---|---|---|---|---|---|---|---|---|---|---|---|---|---|---|---|---|---|---|---|---|---|---|
| | | | | | A1 BARS | | J3 BARS | | | | | H1 BARS | | | H2 BARS | | | A2 BARS | | J4 BARS | | | | | H3 BARS | | | B1 BARS | | B2 BARS | | |
| | | | | | | | | | | K2 | | | | | | | | | | | K3 | | | | | | | | | | |
| | TS | BS | TX | TI | SIZE | SPA. | SIZE | SPA. | C1 | HT=5′ | HT=6′ | SIZE | SPA. | C5 | SIZE | SPA. | C6 | SIZE | SPA. | SIZE | SPA. | C4 | HT=5′ | HT=6′ | SIZE | SPA. | C7 | SIZE | SPA. | SIZE | SPA. | G1 |
| 1 FT | 11 | 8 | 8 | 8 | 4 | 6 | 4 | 9.5 | 30.9 | 27.0 | 27.0 | 4 | 20 | 56.0 | 4 | 20 | 22.0 | 4 | 11.5 | 4 | 9.5 | 44.1 | 64 | 76 | 4 | 7 | 31.0 | 5 | 12 | 5 | 12 | 12 |
| 2 FT | 11 | 8 | 8 | 8 | 4 | 6 | 4 | 9.5 | 30.9 | 27.0 | 27.0 | 4 | 19 | 56.0 | 4 | 19 | 21.5 | 4 | 10.5 | 4 | 9 | 40.6 | 64 | 76 | 4 | 7 | 31.0 | 5 | 12 | 5 | 12 | 12 |
| 4 FT | 8 | 8 | 8 | 8 | 4 | 10.5 | 4 | 10.5 | 30.9 | 24.0 | 24.0 | 4 | 18 | 56.0 | 4 | 18 | 20.0 | 4 | 11.5 | 4 | 9 | 37.6 | 64 | 76 | 4 | 7 | 30.0 | 5 | 12 | 5 | 12 | 12 |
| 6 FT | 8 | 8 | 8 | 8 | 4 | 12 | 4 | 10.5 | 37.1 | 24.0 | 24.0 | 4 | 19 | 32.0 | 4 | 19 | 20.0 | 4 | 11 | 4 | 8.5 | 34.6 | 64 | 76 | 4 | 6.5 | 29.5 | 5 | 12 | 5 | 12 | 12 |
| 8 FT | 8 | 8 | 8 | 8 | 4 | 12 | 4 | 10 | 33.8 | 24.0 | 24.0 | 4 | 18 | 30.5 | 4 | 18 | 19.5 | 4 | 10 | 4 | 8 | 33.0 | 64 | 76 | 4 | 6 | 29.0 | 5 | 12 | 5 | 12 | 0 |
| 10 FT | 8 | 8 | 8 | 8 | 4 | 11 | 4 | 9 | 32.3 | 24.0 | 24.0 | 4 | 16 | 29.5 | 4 | 16 | 19.5 | 4 | 9 | 4 | 7.5 | 31.9 | 64 | 76 | 5 | 7.5 | 29.0 | 5 | 12 | 5 | 12 | 0 |
| 12 FT | 8 | 8 | 8 | 8 | 4 | 11.5 | 4 | 9.5 | 29.5 | 24.0 | 24.0 | 4 | 16 | 28.5 | 4 | 16 | 19.0 | 4 | 9 | 4 | 7.5 | 29.4 | 64 | 76 | 5 | 7.5 | 28.5 | 5 | 12 | 5 | 12 | 0 |
| 14 FT | 8 | 8 | 8 | 8 | 4 | 10 | 4 | 8 | 29.3 | 24.0 | 24.0 | 4 | 14 | 28.5 | 4 | 14 | 19.0 | 4 | 8 | 4 | 7 | 29.1 | 64 | 76 | 5 | 7 | 28.5 | 5 | 12 | 5 | 12 | 0 |
| 16 FT | 8 | 9 | 8 | 8 | 4 | 9 | 4 | 7 | 29.3 | 24.0 | 24.0 | 4 | 12 | 28.0 | 4 | 12 | 19.0 | 4 | 8 | 4 | 8 | 29.3 | 65 | 77 | 5 | 7.5 | 29.0 | 5 | 12 | 5 | 12 | 0 |
| 18 FT | 8 | 9 | 8 | 8 | 4 | 8 | 4 | 6.5 | 29.1 | 24.0 | 24.0 | 5 | 17 | 28.0 | 5 | 17 | 19.5 | 4 | 7 | 4 | 7.5 | 29.1 | 65 | 77 | 5 | 7 | 29.0 | 5 | 12 | 5 | 12 | 0 |
| 20 FT | 8 | 10 | 8 | 8 | 4 | 7 | 5 | 7 | 29.0 | 24.0 | 24.0 | 5 | 17 | 28.0 | 5 | 17 | 20.0 | 4 | 7.5 | 4 | 8.5 | 29.3 | 66 | 78 | 5 | 7.5 | 29.0 | 5 | 12 | 5 | 12 | 0 |
| 22 FT | 9 | 10 | 8 | 8 | 4 | 7 | 4 | 6.5 | 29.1 | 25.0 | 25.0 | 5 | 16 | 28.0 | 5 | 16 | 19.0 | 4 | 7 | 4 | 7.5 | 29.3 | 66 | 78 | 5 | 7 | 29.0 | 5 | 12 | 5 | 12 | 0 |
| 24 FT | 9 | 11 | 8 | 8 | 4 | 6.5 | 4 | 6 | 29.1 | 25.0 | 25.0 | 5 | 16 | 28.0 | 5 | 16 | 19.5 | 4 | 7 | 4 | 7.5 | 29.5 | 67 | 79 | 5 | 7.5 | 29.0 | 5 | 12 | 5 | 12 | 0 |
| 26 FT | 10 | 11 | 8 | 8 | 4 | 6.5 | 5 | 8 | 29.3 | 26.0 | 26.0 | 5 | 16 | 28.0 | 5 | 16 | 19.0 | 4 | 6.5 | 4 | 6.5 | 29.5 | 67 | 79 | 5 | 7.5 | 29.0 | 5 | 12 | 5 | 12 | 0 |
| 28 FT | 10 | 12 | 8 | 8 | 4 | 6.5 | 5 | 7.5 | 29.3 | 26.0 | 26.0 | 5 | 15 | 28.0 | 5 | 15 | 19.0 | 4 | 6.5 | 4 | 6.5 | 29.6 | 68 | 80 | 5 | 7.5 | 29.0 | 5 | 12 | 5 | 12 | 0 |
| 30 FT | 11 | 12 | 8 | 8 | 4 | 6.5 | 5 | 8.5 | 29.4 | 27.0 | 27.0 | 5 | 16 | 27.5 | 5 | 16 | 19.0 | 4 | 6.5 | 4 | 6 | 29.8 | 68 | 80 | 5 | 7.5 | 29.0 | 5 | 12 | 5 | 12 | 0 |
| 32 FT | 11 | 13 | 8 | 8 | 4 | 6 | 5 | 8 | 29.5 | 27.0 | 27.0 | 5 | 15 | 27.5 | 5 | 15 | 19.0 | 4 | 6.5 | 4 | 6 | 29.9 | 69 | 81 | 5 | 7.5 | 29.0 | 5 | 12 | 5 | 12 | 0 |
| 34 FT | 12 | 13 | 8 | 8 | 4 | 6 | 5 | 8.5 | 29.5 | 28.0 | 32.0 | 5 | 16 | 27.5 | 5 | 16 | 19.0 | 4 | 6 | 5 | 8.5 | 30.0 | 69 | 81 | 5 | 7 | 29.0 | 5 | 12 | 5 | 11.5 | 0 |
| 36 FT | 12 | 14 | 8 | 8 | 5 | 9 | 5 | 7.5 | 29.6 | 28.0 | 32.0 | 5 | 15 | 27.0 | 5 | 15 | 19.0 | 4 | 6.5 | 5 | 9 | 30.1 | 70 | 82 | 5 | 7.5 | 29.0 | 5 | 12 | 5 | 10.5 | 0 |
| 38 FT | 12 | 14 | 8 | 8 | 5 | 8.5 | 5 | 7.5 | 29.6 | 28.0 | 32.0 | 5 | 15 | 27.0 | 5 | 15 | 19.0 | 4 | 6 | 5 | 8.5 | 30.1 | 70 | 82 | 5 | 7 | 29.0 | 5 | 12 | 5 | 10 | 0 |
| 40 FT | 13 | 14 | 8 | 8 | 5 | 8.5 | 5 | 7.5 | 29.6 | 29.0 | 33.0 | 5 | 16 | 27.0 | 5 | 16 | 19.0 | 5 | 8.5 | 5 | 8 | 30.3 | 70 | 82 | 5 | 7 | 29.0 | 5 | 12 | 5 | 9.5 | 0 |
| 42 FT | 13 | 15 | 8 | 8 | 5 | 8.5 | 5 | 7 | 29.8 | 29.0 | 33.0 | 5 | 15 | 26.5 | 5 | 15 | 19.0 | 4 | 6 | 5 | 8 | 30.4 | 71 | 83 | 5 | 7 | 28.5 | 5 | 12 | 5 | 9.5 | 0 |
| 44 FT | 13 | 15 | 8 | 8 | 5 | 8 | 5 | 6.5 | 29.8 | 29.0 | 33.0 | 5 | 14 | 26.5 | 5 | 14 | 19.0 | 5 | 9 | 5 | 8 | 30.4 | 71 | 83 | 5 | 7 | 28.5 | 5 | 12 | 5 | 9.5 | 0 |
| 46 FT | 14 | 16 | 9 | 8 | 5 | 8 | 5 | 8 | 30.5 | 30.0 | 34.0 | 5 | 16 | 26.0 | 5 | 16 | 19.0 | 5 | 9 | 5 | 9 | 31.0 | 72 | 84 | 5 | 7 | 29.0 | 5 | 12 | 5 | 9.5 | 0 |
| 48 FT | 14 | 16 | 9 | 8 | 5 | 8 | 5 | 8 | 30.4 | 30.0 | 34.0 | 5 | 15 | 26.0 | 5 | 15 | 19.0 | 5 | 8.5 | 5 | 8.5 | 31.0 | 72 | 84 | 5 | 6.5 | 29.0 | 5 | 12 | 5 | 9 | 0 |
| 50 FT | 14 | 16 | 10 | 8 | 5 | 7.5 | 5 | 7.5 | 31.0 | 30.0 | 30.0 | 5 | 15 | 26.0 | 5 | 15 | 19.0 | 5 | 8 | 4 | 6 | 31.1 | 72 | 84 | 5 | 6.5 | 29.0 | 5 | 12 | 5 | 10 | 0 |

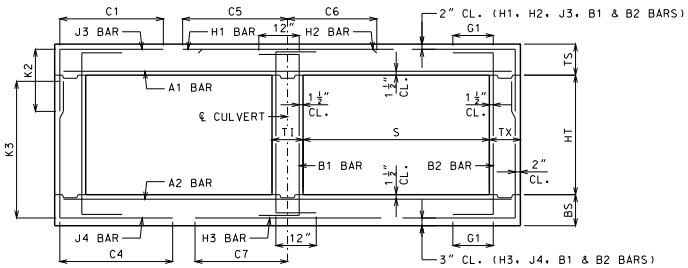


BAR DIMENSIONS DIAGRAM
SYMMETRICAL ABOUT ℄ CULVERT.

GENERAL NOTES:

IF DESIGN FILL IS BETWEEN TABULATED DESIGN FILLS, USE THE NEXT GREATER TABULATED DESIGN FILL, EXCEPT FOR DESIGN FILLS BETWEEN 2 FEET AND 4 FEET. FOR DESIGN FILLS BETWEEN 2 FEET AND 4 FEET USE THE GREATER MEMBER THICKNESS, AREA OF REINFORCEMENT AND BAR DIMENSIONS FROM THE 2 FEET AND 4 FEET TABULATED DESIGN FILLS. AREA OF REINFORCEMENT EQUALS BAR AREA PER FOOT SPACING.

SPECIAL DESIGNS ARE REQUIRED WHEN THE DESIGN FILL IS LESS THAN 1 FOOT OR GREATER THAN 50 FEET.

DIMENSIONS ARE IN INCHES UNLESS OTHERWISE SPECIFIED.

DESIGN FILLS ARE MEASURED FROM THE TOP OF TOP SLAB TO THE TOP OF EARTH FILL OR ROADWAY.

CULVERTS MEET STRENGTH AND SERVICEABILITY REQUIREMENTS FOR THE DESIGN VEHICULAR LIVE LOAD HL-93 MINUS THE LANE LOAD.


MISSOURI HIGHWAYS AND TRANSPORTATION COMMISSION
105 WEST CAPITOL
JEFFERSON CITY, MO 65102
1-888-ASK-MODOT (1-888-275-6636)


STATE OF MISSOURI
DENNIS W. HECKMAN
NUMBER PE-27141
PROFESSIONAL ENGINEER
THIS SHEET HAS BEEN SIGNED, SEALED AND DATED ELECTRONICALLY.

# CONCRETE DOUBLE BOX CULVERT

MEMBER THICKNESS
BAR SIZE, SPACING & DIMENSIONS

SPAN (S): 5 FEET
HEIGHT (HT): 3 THRU 6 FEET

DATE EFFECTIVE: 10/01/2011
DATE PREPARED: 9/8/2011

703.47

SHEET NO.
4 OF 27

IF A SEAL IS PRESENT ON THIS SHEET IT HAS BEEN ELECTRONICALLY SEALED AND DATED.

SPAN (S) = 5 FT  HEIGHT (HT) = 7 FT OR 8 FT

| DESIGN FILL | MEMBER THICKNESS | | | | TOP SLAB BARS | | | | | | | H1 BARS | | | H2 BARS | | | BOTTOM SLAB BARS | | | | | | | | H3 BARS | | | WALL BARS | | | | |
|---|---|---|---|---|---|---|---|---|---|---|---|---|---|---|---|---|---|---|---|---|---|---|---|---|---|---|---|---|---|---|---|---|
| | | | | | A1 BARS | | J3 BARS | | | K2 | | | | | | | | A2 BARS | | J4 BARS | | | K3 | | | | | | B1 BARS | | B2 BARS | | |
| | TS | BS | TX | TI | SIZE | SPA. | SIZE | SPA. | C1 | HT=7′ | HT=8′ | SIZE | SPA. | C5 | SIZE | SPA. | C6 | SIZE | SPA. | SIZE | SPA. | C4 | HT=7′ | HT=8′ | SIZE | SPA. | C7 | SIZE | SPA. | SIZE | SPA. | G1 |
| 1 FT | 11 | 8 | 8 | 8 | 4 | 6 | 4 | 9.5 | 30.9 | 27.0 | 27.0 | 4 | 20 | 56.0 | 4 | 20 | 22.0 | 4 | 10.5 | 4 | 7 | 52.1 | 88 | 100 | 4 | 7 | 31.0 | 5 | 12 | 5 | 12 | 12 |
| 2 FT | 11 | 8 | 8 | 8 | 4 | 6 | 4 | 9 | 30.9 | 27.0 | 27.0 | 4 | 20 | 56.0 | 4 | 20 | 22.0 | 4 | 10 | 4 | 6.5 | 50.0 | 88 | 100 | 4 | 6.5 | 31.0 | 5 | 12 | 5 | 12 | 12 |
| 4 FT | 8 | 8 | 8 | 8 | 4 | 10 | 4 | 7 | 30.9 | 24.0 | 24.0 | 4 | 18 | 56.0 | 4 | 18 | 20.5 | 4 | 10.5 | 4 | 6 | 47.4 | 88 | 100 | 4 | 6.5 | 30.0 | 5 | 12 | 5 | 12 | 12 |
| 6 FT | 8 | 9 | 8 | 8 | 4 | 12 | 4 | 7 | 51.6 | 24.0 | 24.0 | 4 | 19 | 32.5 | 4 | 19 | 20.0 | 4 | 12 | 4 | 6.5 | 46.3 | 89 | 101 | 4 | 7.5 | 29.5 | 5 | 12 | 5 | 12 | 12 |
| 8 FT | 8 | 9 | 8 | 8 | 4 | 12 | 4 | 6.5 | 44.5 | 24.0 | 24.0 | 4 | 18 | 30.5 | 4 | 18 | 19.5 | 4 | 11 | 4 | 6 | 44.0 | 89 | 101 | 4 | 7 | 29.5 | 5 | 12 | 5 | 12 | 0 |
| 10 FT | 8 | 9 | 9 | 8 | 4 | 11.5 | 4 | 7 | 40.8 | 24.0 | 24.0 | 4 | 16 | 29.5 | 4 | 16 | 19.5 | 4 | 10 | 4 | 6.5 | 41.4 | 89 | 101 | 4 | 6.5 | 29.0 | 5 | 12 | 5 | 12 | 0 |
| 12 FT | 8 | 9 | 9 | 8 | 4 | 12 | 4 | 7 | 36.9 | 24.0 | 24.0 | 4 | 17 | 28.0 | 4 | 17 | 19.0 | 4 | 10.5 | 4 | 7 | 38.3 | 89 | 101 | 4 | 6.5 | 29.0 | 5 | 12 | 5 | 12 | 0 |
| 14 FT | 8 | 9 | 9 | 8 | 4 | 10.5 | 4 | 6.5 | 36.4 | 24.0 | 24.0 | 4 | 15 | 28.0 | 4 | 15 | 19.0 | 4 | 9 | 4 | 6.5 | 37.9 | 89 | 101 | 4 | 6 | 29.0 | 5 | 12 | 5 | 12 | 0 |
| 16 FT | 8 | 9 | 9 | 8 | 4 | 9 | 5 | 7 | 36.0 | 24.0 | 28.0 | 4 | 13 | 28.0 | 4 | 13 | 19.0 | 4 | 8 | 5 | 7 | 37.5 | 89 | 101 | 5 | 7.5 | 28.5 | 5 | 12 | 5 | 12 | 0 |
| 18 FT | 8 | 9 | 9 | 8 | 4 | 8 | 5 | 6 | 35.8 | 24.0 | 28.0 | 5 | 18 | 28.0 | 5 | 18 | 19.0 | 4 | 7.5 | 5 | 6 | 37.3 | 89 | 101 | 5 | 7 | 28.5 | 5 | 12 | 5 | 12 | 0 |
| 20 FT | 8 | 10 | 9 | 8 | 4 | 7.5 | 6 | 7 | 38.4 | 24.0 | 28.0 | 5 | 17 | 28.0 | 5 | 17 | 19.5 | 4 | 7.5 | 5 | 6.5 | 38.1 | 90 | 102 | 5 | 7.5 | 29.0 | 5 | 12 | 5 | 11 | 0 |
| 22 FT | 9 | 10 | 9 | 8 | 4 | 7.5 | 5 | 6 | 36.4 | 25.0 | 29.0 | 5 | 17 | 27.5 | 5 | 17 | 19.0 | 4 | 7 | 5 | 6 | 37.8 | 90 | 102 | 5 | 7.5 | 29.0 | 5 | 12 | 5 | 10 | 0 |
| 24 FT | 9 | 11 | 9 | 8 | 4 | 7 | 5 | 6 | 36.1 | 25.0 | 29.0 | 5 | 16 | 27.5 | 5 | 16 | 19.0 | 4 | 7 | 5 | 6 | 38.5 | 91 | 103 | 5 | 8 | 29.0 | 5 | 12 | 5 | 9.5 | 0 |
| 26 FT | 10 | 11 | 9 | 8 | 4 | 7 | 5 | 6 | 36.9 | 26.0 | 30.0 | 5 | 17 | 27.5 | 5 | 17 | 19.0 | 4 | 6.5 | 5 | 6 | 38.3 | 91 | 103 | 5 | 7.5 | 29.0 | 5 | 12 | 5 | 9 | 0 |
| 28 FT | 10 | 12 | 9 | 8 | 4 | 6.5 | 5 | 6 | 36.8 | 30.0 | 30.0 | 5 | 16 | 27.5 | 5 | 16 | 19.0 | 4 | 7 | 5 | 6 | 38.9 | 92 | 104 | 5 | 8 | 29.0 | 5 | 12 | 5 | 8.5 | 0 |
| 30 FT | 11 | 12 | 9 | 8 | 4 | 6.5 | 5 | 6 | 37.4 | 31.0 | 31.0 | 5 | 17 | 27.0 | 5 | 17 | 19.0 | 4 | 6.5 | 6 | 7.5 | 41.6 | 92 | 104 | 5 | 7.5 | 29.0 | 5 | 12 | 5 | 8.5 | 0 |
| 32 FT | 11 | 13 | 9 | 8 | 4 | 6.5 | 6 | 7 | 40.3 | 31.0 | 31.0 | 5 | 16 | 27.0 | 5 | 16 | 19.0 | 4 | 6.5 | 5 | 6 | 39.1 | 93 | 105 | 5 | 7.5 | 29.0 | 5 | 12 | 5 | 8.5 | 0 |
| 34 FT | 11 | 13 | 9 | 8 | 4 | 6 | 6 | 7 | 40.1 | 31.0 | 35.0 | 5 | 15 | 27.0 | 5 | 15 | 19.0 | 4 | 6.5 | 6 | 7 | 42.1 | 93 | 105 | 5 | 7.5 | 29.0 | 5 | 12 | 5 | 8.5 | 0 |
| 36 FT | 12 | 14 | 10 | 8 | 4 | 6 | 5 | 6.5 | 37.8 | 32.0 | 32.0 | 5 | 17 | 26.0 | 5 | 17 | 19.0 | 4 | 6.5 | 5 | 7 | 39.5 | 94 | 106 | 5 | 7.5 | 29.0 | 5 | 12 | 5 | 8 | 0 |
| 38 FT | 12 | 14 | 10 | 8 | 5 | 9 | 5 | 6 | 37.6 | 32.0 | 32.0 | 5 | 16 | 26.0 | 5 | 16 | 19.0 | 4 | 6 | 5 | 6.5 | 39.5 | 94 | 106 | 5 | 7 | 29.0 | 5 | 12 | 5 | 8 | 0 |
| 40 FT | 12 | 15 | 11 | 8 | 5 | 8.5 | 5 | 7 | 37.8 | 28.0 | 32.0 | 5 | 15 | 26.0 | 5 | 15 | 19.0 | 4 | 6 | 5 | 7 | 40.0 | 95 | 107 | 5 | 7.5 | 29.0 | 5 | 12 | 5 | 7.5 | 0 |
| 42 FT | 13 | 15 | 11 | 8 | 5 | 8.5 | 5 | 7 | 38.3 | 33.0 | 33.0 | 5 | 17 | 25.5 | 5 | 17 | 18.5 | 4 | 6 | 5 | 7 | 39.9 | 95 | 107 | 5 | 7 | 29.0 | 5 | 12 | 5 | 7.5 | 0 |
| 44 FT | 13 | 15 | 11 | 8 | 5 | 8.5 | 5 | 6.5 | 38.1 | 33.0 | 33.0 | 5 | 16 | 25.5 | 5 | 16 | 18.5 | 5 | 9 | 5 | 7 | 39.9 | 95 | 107 | 5 | 6.5 | 29.0 | 5 | 12 | 5 | 7.5 | 0 |
| 46 FT | 13 | 16 | 12 | 8 | 5 | 8 | 5 | 6.5 | 38.3 | 29.0 | 33.0 | 5 | 16 | 25.5 | 5 | 16 | 18.5 | 4 | 6 | 5 | 7 | 40.4 | 96 | 108 | 5 | 7 | 29.0 | 5 | 12 | 5 | 7.5 | 0 |
| 48 FT | 14 | 16 | 12 | 8 | 5 | 8 | 5 | 6.5 | 38.8 | 34.0 | 34.0 | 5 | 17 | 25.0 | 5 | 17 | 18.5 | 5 | 9 | 5 | 6.5 | 40.4 | 96 | 108 | 5 | 6.5 | 29.0 | 5 | 12 | 5 | 7 | 0 |
| 50 FT | 14 | 16 | 12 | 8 | 5 | 7.5 | 5 | 6.5 | 38.8 | 34.0 | 34.0 | 5 | 17 | 25.0 | 5 | 17 | 18.5 | 5 | 8.5 | 5 | 6.5 | 40.3 | 96 | 108 | 5 | 6.5 | 29.0 | 5 | 12 | 5 | 7 | 0 |

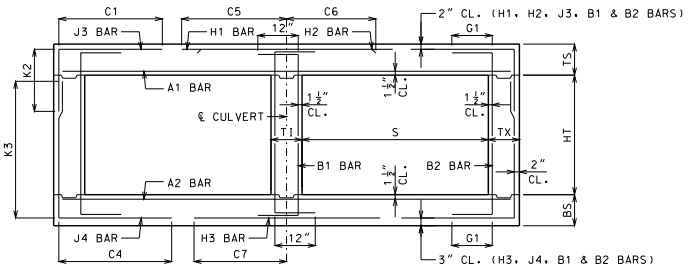


BAR DIMENSIONS DIAGRAM
SYMMETRICAL ABOUT ℄ CULVERT.

GENERAL NOTES:

IF DESIGN FILL IS BETWEEN TABULATED DESIGN FILLS, USE THE NEXT GREATER TABULATED DESIGN FILL, EXCEPT FOR DESIGN FILLS BETWEEN 2 FEET AND 4 FEET. FOR DESIGN FILLS BETWEEN 2 FEET AND 4 FEET USE THE GREATER MEMBER THICKNESS, AREA OF REINFORCEMENT AND BAR DIMENSIONS FROM THE 2 FEET AND 4 FEET TABULATED DESIGN FILLS. AREA OF REINFORCEMENT EQUALS BAR AREA PER FOOT SPACING.

SPECIAL DESIGNS ARE REQUIRED WHEN THE DESIGN FILL IS LESS THAN 1 FOOT OR GREATER THAN 50 FEET.

DIMENSIONS ARE IN INCHES UNLESS OTHERWISE SPECIFIED.

DESIGN FILLS ARE MEASURED FROM THE TOP OF TOP SLAB TO THE TOP OF EARTH FILL OR ROADWAY.

CULVERTS MEET STRENGTH AND SERVICEABILITY REQUIREMENTS FOR THE DESIGN VEHICULAR LIVE LOAD HL-93 MINUS THE LANE LOAD.


MISSOURI HIGHWAYS AND TRANSPORTATION COMMISSION
105 WEST CAPITOL
JEFFERSON CITY, MO 65102
1-888-ASK-MODOT (1-888-275-6636)


STATE OF MISSOURI
DENNIS W. HECKMANN
NUMBER PE-27141
PROFESSIONAL ENGINEER
THIS SHEET HAS BEEN SIGNED, SEALED AND DATED ELECTRONICALLY.

# CONCRETE DOUBLE BOX CULVERT

MEMBER THICKNESS
BAR SIZE, SPACING & DIMENSIONS

SPAN (S): 5 FEET
HEIGHT (HT): 7 THRU 8 FEET

DATE EFFECTIVE: 10/01/2011
DATE PREPARED: 9/8/2011

703.47

SHEET NO.
5 OF 27

IF A SEAL IS PRESENT ON THIS SHEET IT HAS BEEN ELECTRONICALLY SEALED AND DATED.

SPAN (S) = 6 FT  HEIGHT (HT) = 3 FT OR 4 FT OR 5 FT

| DESIGN FILL | MEMBER THICKNESS | | | | TOP SLAB BARS | | | | | | | | | | | | | BOTTOM SLAB BARS | | | | | | | | | | | | WALL BARS | | | | |
|---|---|---|---|---|---|---|---|---|---|---|---|---|---|---|---|---|---|---|---|---|---|---|---|---|---|---|---|---|---|---|---|---|---|
| | | | | | A1 BARS | | J3 BARS | | | K2 | | | H1 BARS | | | H2 BARS | | | A2 BARS | | J4 BARS | | | K3 | | | H3 BARS | | | B1 BARS | | B2 BARS | | |
| | TS | BS | TX | TI | SIZE | SPA. | SIZE | SPA. | C1 | HT=3′ | HT=4′ | HT=5′ | SIZE | SPA. | C5 | SIZE | SPA. | C6 | SIZE | SPA. | SIZE | SPA. | C4 | HT=3′ | HT=4′ | HT=5′ | SIZE | SPA. | C7 | SIZE | SPA. | SIZE | SPA. | G1 |
| 1 FT | 11 | 8 | 8 | 8 | 5 | 8.5 | 4 | 9.5 | 34.5 | 27.0 | 27.0 | 27.0 | 4 | 16 | 64.5 | 4 | 16 | 23.0 | 4 | 9.5 | 4 | 9.5 | 37.6 | 40 | 52 | 64 | 4 | 6 | 34.5 | 5 | 12 | 5 | 12 | 12 |
| 2 FT | 11 | 8 | 8 | 8 | 5 | 8.5 | 4 | 9.5 | 34.5 | 27.0 | 27.0 | 27.0 | 4 | 15 | 64.5 | 4 | 15 | 22.5 | 4 | 9 | 4 | 9 | 35.0 | 40 | 52 | 64 | 5 | 7.5 | 34.0 | 5 | 12 | 5 | 12 | 12 |
| 4 FT | 8 | 8 | 8 | 8 | 4 | 8 | 4 | 9 | 34.0 | 24.0 | 24.0 | 24.0 | 4 | 13 | 43.5 | 4 | 13 | 21.0 | 4 | 9 | 4 | 9.5 | 32.0 | 40 | 52 | 64 | 5 | 7.5 | 33.5 | 5 | 12 | 5 | 12 | 12 |
| 6 FT | 8 | 8 | 8 | 8 | 4 | 9.5 | 4 | 9.5 | 30.4 | 24.0 | 24.0 | 24.0 | 4 | 13 | 35.5 | 4 | 13 | 20.5 | 4 | 8.5 | 4 | 9 | 29.9 | 40 | 52 | 64 | 5 | 7 | 32.5 | 5 | 12 | 5 | 12 | 12 |
| 8 FT | 8 | 8 | 8 | 8 | 4 | 9 | 4 | 9 | 29.3 | 24.0 | 24.0 | 24.0 | 4 | 12 | 34.0 | 4 | 12 | 20.5 | 4 | 7.5 | 4 | 8 | 28.9 | 40 | 52 | 64 | 5 | 6.5 | 32.0 | 5 | 12 | 5 | 12 | 0 |
| 10 FT | 8 | 9 | 8 | 8 | 4 | 8 | 4 | 8 | 28.8 | 24.0 | 24.0 | 24.0 | 5 | 17 | 33.0 | 5 | 17 | 20.5 | 4 | 7.5 | 4 | 10 | 27.8 | 41 | 53 | 65 | 5 | 7 | 32.0 | 5 | 12 | 5 | 12 | 0 |
| 12 FT | 8 | 9 | 8 | 8 | 4 | 7 | 4 | 7 | 28.4 | 24.0 | 24.0 | 24.0 | 5 | 16 | 32.5 | 5 | 16 | 21.5 | 4 | 6.5 | 4 | 9 | 27.3 | 41 | 53 | 65 | 5 | 6.5 | 32.0 | 5 | 12 | 5 | 12 | 0 |
| 14 FT | 8 | 9 | 8 | 8 | 4 | 7.5 | 4 | 7 | 27.0 | 24.0 | 24.0 | 24.0 | 5 | 16 | 31.5 | 5 | 16 | 21.5 | 4 | 6.6 | 4 | 9.5 | 25.9 | 41 | 53 | 65 | 5 | 6 | 32.0 | 5 | 12 | 5 | 12 | 0 |
| 16 FT | 8 | 10 | 8 | 8 | 4 | 6.5 | 4 | 6 | 27.1 | 24.0 | 24.0 | 24.0 | 5 | 15 | 31.5 | 5 | 15 | 22.5 | 4 | 6.5 | 4 | 11.5 | 25.3 | 42 | 54 | 66 | 5 | 6.5 | 32.0 | 5 | 12 | 5 | 12 | 0 |
| 18 FT | 9 | 11 | 8 | 8 | 4 | 6.5 | 4 | 7.5 | 26.6 | 25.0 | 25.0 | 25.0 | 5 | 16 | 31.5 | 5 | 16 | 21.5 | 4 | 6.5 | 4 | 10.5 | 25.0 | 43 | 55 | 67 | 5 | 7 | 32.0 | 5 | 12 | 5 | 12 | 0 |
| 20 FT | 10 | 11 | 8 | 8 | 4 | 6 | 4 | 7.5 | 26.1 | 26.0 | 26.0 | 26.0 | 5 | 15 | 31.5 | 5 | 15 | 21.0 | 4 | 6 | 4 | 10 | 25.3 | 43 | 55 | 67 | 5 | 6.5 | 32.0 | 5 | 12 | 5 | 12 | 0 |
| 22 FT | 10 | 12 | 8 | 8 | 5 | 9 | 4 | 6.5 | 26.3 | 26.0 | 26.0 | 26.0 | 5 | 15 | 31.5 | 5 | 15 | 21.5 | 4 | 6 | 4 | 9.5 | 24.9 | 44 | 56 | 68 | 5 | 6.5 | 32.0 | 5 | 12 | 5 | 12 | 0 |
| 24 FT | 11 | 12 | 8 | 8 | 5 | 9 | 4 | 7 | 25.9 | 27.0 | 27.0 | 27.0 | 5 | 14 | 31.5 | 5 | 14 | 21.0 | 5 | 8.5 | 4 | 9 | 25.1 | 44 | 56 | 68 | 5 | 6 | 32.0 | 5 | 12 | 5 | 12 | 0 |
| 26 FT | 11 | 13 | 8 | 8 | 5 | 8.5 | 4 | 6 | 26.0 | 27.0 | 27.0 | 27.0 | 5 | 14 | 31.5 | 5 | 14 | 21.5 | 5 | 8.5 | 4 | 8.5 | 24.9 | 45 | 57 | 69 | 5 | 6 | 32.0 | 5 | 12 | 5 | 12 | 0 |
| 28 FT | 12 | 14 | 8 | 8 | 5 | 8.5 | 4 | 6.5 | 25.9 | 28.0 | 28.0 | 28.0 | 5 | 13 | 31.5 | 5 | 13 | 20.5 | 5 | 9 | 4 | 7.5 | 25.0 | 46 | 58 | 70 | 5 | 6.5 | 32.0 | 5 | 12 | 5 | 12 | 0 |
| 30 FT | 13 | 14 | 8 | 8 | 5 | 8.5 | 4 | 6.5 | 25.6 | 29.0 | 29.0 | 29.0 | 5 | 12 | 31.0 | 5 | 12 | 20.0 | 5 | 8.5 | 4 | 7.5 | 25.1 | 46 | 58 | 70 | 5 | 6 | 32.0 | 5 | 12 | 5 | 12 | 0 |
| 32 FT | 13 | 15 | 8 | 8 | 5 | 8 | 4 | 6 | 25.8 | 29.0 | 29.0 | 29.0 | 5 | 12 | 31.0 | 5 | 12 | 20.5 | 5 | 8.5 | 4 | 7 | 25.1 | 47 | 59 | 71 | 5 | 6 | 32.0 | 5 | 12 | 5 | 12 | 0 |
| 34 FT | 14 | 15 | 8 | 8 | 5 | 8 | 4 | 6 | 25.5 | 30.0 | 30.0 | 30.0 | 5 | 12 | 31.0 | 5 | 12 | 20.0 | 5 | 8 | 4 | 7 | 25.3 | 47 | 59 | 71 | 6 | 8.5 | 35.0 | 5 | 12 | 5 | 12 | 0 |
| 36 FT | 14 | 16 | 8 | 8 | 5 | 7.5 | 5 | 8.5 | 25.8 | 30.0 | 30.0 | 30.0 | 5 | 12 | 31.0 | 5 | 12 | 20.0 | 5 | 8 | 4 | 6.5 | 25.3 | 48 | 60 | 72 | 5 | 6 | 32.0 | 5 | 12 | 5 | 12 | 0 |
| 38 FT | 15 | 16 | 8 | 8 | 5 | 7.5 | 4 | 6 | 27.5 | 31.0 | 31.0 | 31.0 | 5 | 12 | 35.5 | 5 | 12 | 25.0 | 5 | 7.5 | 4 | 6.5 | 25.4 | 48 | 60 | 72 | 6 | 8 | 35.0 | 5 | 12 | 5 | 12 | 0 |
| 40 FT | 15 | 17 | 8 | 8 | 5 | 7 | 5 | 8 | 30.8 | 31.0 | 31.0 | 31.0 | 6 | 17 | 39.5 | 6 | 17 | 29.0 | 5 | 7.5 | 4 | 6 | 25.4 | 49 | 61 | 73 | 6 | 8.5 | 35.0 | 5 | 12 | 5 | 12 | 0 |
| 42 FT | 16 | 17 | 8 | 8 | 5 | 7 | 5 | 7 | 30.6 | 32.0 | 32.0 | 32.0 | 5 | 12 | 35.0 | 5 | 12 | 25.0 | 5 | 7.5 | 4 | 6 | 25.6 | 49 | 61 | 73 | 6 | 8 | 35.0 | 5 | 12 | 5 | 12 | 0 |
| 44 FT | 16 | 18 | 8 | 8 | 5 | 6.5 | 5 | 7 | 30.8 | 32.0 | 32.0 | 36.0 | 6 | 17 | 39.0 | 6 | 17 | 29.0 | 5 | 7.5 | 5 | 6.5 | 25.6 | 50 | 62 | 74 | 6 | 8 | 35.0 | 5 | 12 | 5 | 12 | 0 |
| 46 FT | 16 | 18 | 8 | 8 | 5 | 6 | 5 | 7 | 30.8 | 32.0 | 32.0 | 36.0 | 6 | 16 | 39.0 | 6 | 16 | 29.0 | 5 | 7 | 5 | 6.5 | 25.6 | 50 | 62 | 74 | 6 | 8 | 35.0 | 5 | 12 | 5 | 11.5 | 0 |
| 48 FT | 17 | 19 | 8 | 8 | 5 | 6.5 | 5 | 6.5 | 30.8 | 37.0 | 37.0 | 37.0 | 5 | 12 | 34.5 | 5 | 12 | 24.5 | 5 | 7.5 | 5 | 6.5 | 25.9 | 51 | 63 | 75 | 6 | 8 | 35.0 | 5 | 12 | 5 | 10.5 | 0 |
| 50 FT | 17 | 19 | 8 | 8 | 5 | 6 | 5 | 6.5 | 30.8 | 37.0 | 37.0 | 37.0 | 6 | 16 | 38.5 | 6 | 16 | 28.5 | 5 | 7 | 5 | 6.5 | 25.9 | 51 | 63 | 75 | 6 | 7.5 | 35.0 | 5 | 12 | 5 | 10 | 0 |

SPAN (S) = 6 FT  HEIGHT (HT) = 6 FT OR 7 FT

| DESIGN FILL | MEMBER THICKNESS | | | | TOP SLAB BARS | | | | | | | | | | | | | BOTTOM SLAB BARS | | | | | | | | | | | | WALL BARS | | | | |
|---|---|---|---|---|---|---|---|---|---|---|---|---|---|---|---|---|---|---|---|---|---|---|---|---|---|---|---|---|---|---|---|---|---|
| | | | | | A1 BARS | | J3 BARS | | | K2 | | | H1 BARS | | | H2 BARS | | | A2 BARS | | J4 BARS | | | K3 | | | H3 BARS | | | B1 BARS | | B2 BARS | | |
| | TS | BS | TX | TI | SIZE | SPA. | SIZE | SPA. | C1 | HT=6′ | HT=7′ | | SIZE | SPA. | C5 | SIZE | SPA. | C6 | SIZE | SPA. | SIZE | SPA. | C4 | HT=6′ | HT=7′ | | SIZE | SPA. | C7 | SIZE | SPA. | SIZE | SPA. | G1 |
| 1 FT | 11 | 8 | 8 | 8 | 5 | 8 | 4 | 9.5 | 34.5 | 27.0 | 27.0 | | 4 | 16 | 64.5 | 4 | 16 | 23.5 | 4 | 9 | 4 | 7.5 | 48.9 | 76 | 88 | | 5 | 7.5 | 34.5 | 5 | 12 | 5 | 12 | 12 |
| 2 FT | 11 | 8 | 8 | 8 | 5 | 8 | 4 | 9.5 | 34.5 | 27.0 | 27.0 | | 4 | 15 | 64.5 | 4 | 15 | 23.0 | 4 | 8.5 | 4 | 7 | 45.0 | 76 | 88 | | 5 | 7.5 | 34.0 | 5 | 12 | 5 | 12 | 12 |
| 4 FT | 8 | 8 | 8 | 8 | 4 | 7.5 | 4 | 7.5 | 34.5 | 24.0 | 24.0 | | 4 | 13 | 64.5 | 4 | 13 | 21.0 | 4 | 8.5 | 4 | 7 | 41.6 | 76 | 88 | | 5 | 7 | 33.5 | 5 | 12 | 5 | 12 | 12 |
| 6 FT | 8 | 8 | 8 | 8 | 4 | 9 | 4 | 7.5 | 40.9 | 24.0 | 24.0 | | 4 | 13 | 36.0 | 4 | 13 | 20.5 | 4 | 8 | 4 | 6.5 | 38.1 | 76 | 88 | | 5 | 7 | 32.5 | 5 | 12 | 5 | 12 | 12 |
| 8 FT | 8 | 8 | 8 | 8 | 4 | 9 | 4 | 7 | 37.0 | 24.0 | 24.0 | | 4 | 12 | 34.0 | 4 | 12 | 20.5 | 4 | 7.5 | 4 | 6 | 36.3 | 76 | 88 | | 5 | 6.5 | 32.0 | 5 | 12 | 5 | 12 | 0 |
| 10 FT | 8 | 9 | 8 | 8 | 4 | 8 | 4 | 6 | 35.1 | 24.0 | 24.0 | | 5 | 17 | 33.0 | 5 | 17 | 21.0 | 4 | 7.5 | 4 | 6.5 | 35.5 | 77 | 89 | | 5 | 7 | 32.0 | 5 | 12 | 5 | 12 | 0 |
| 12 FT | 8 | 9 | 8 | 8 | 4 | 7 | 5 | 6.5 | 34.1 | 24.0 | 24.0 | | 5 | 16 | 32.5 | 5 | 16 | 21.5 | 4 | 6.5 | 4 | 6 | 34.5 | 77 | 89 | | 5 | 6.5 | 32.0 | 5 | 12 | 5 | 12 | 0 |
| 14 FT | 8 | 9 | 8 | 8 | 4 | 7 | 5 | 6.5 | 31.8 | 24.0 | 24.0 | | 5 | 16 | 31.5 | 5 | 16 | 21.5 | 4 | 6.5 | 4 | 6 | 32.0 | 77 | 89 | | 5 | 6 | 32.0 | 5 | 12 | 5 | 12 | 0 |
| 16 FT | 8 | 10 | 8 | 8 | 4 | 6.5 | 5 | 6 | 31.6 | 24.0 | 24.0 | | 5 | 15 | 31.0 | 5 | 15 | 22.5 | 4 | 6.5 | 4 | 7 | 32.0 | 78 | 90 | | 5 | 6.5 | 32.0 | 5 | 12 | 5 | 12 | 0 |
| 18 FT | 9 | 11 | 8 | 8 | 4 | 6.5 | 5 | 6.5 | 31.8 | 25.0 | 25.0 | | 5 | 16 | 31.0 | 5 | 16 | 21.5 | 4 | 6.5 | 4 | 6.5 | 32.3 | 79 | 91 | | 5 | 7 | 32.0 | 5 | 12 | 5 | 12 | 0 |
| 20 FT | 10 | 11 | 8 | 8 | 4 | 6 | 5 | 7.5 | 31.8 | 26.0 | 30.0 | | 5 | 15 | 31.0 | 5 | 15 | 21.0 | 4 | 6 | 5 | 7.5 | 32.1 | 79 | 91 | | 5 | 6.5 | 32.0 | 5 | 12 | 5 | 12 | 0 |
| 22 FT | 10 | 12 | 8 | 8 | 5 | 9 | 5 | 7 | 31.6 | 26.0 | 30.0 | | 5 | 15 | 31.0 | 5 | 15 | 21.5 | 4 | 6 | 5 | 8 | 32.3 | 80 | 92 | | 5 | 6.5 | 32.0 | 5 | 12 | 5 | 12 | 0 |
| 24 FT | 11 | 12 | 8 | 8 | 5 | 9 | 5 | 7.5 | 31.8 | 27.0 | 31.0 | | 5 | 14 | 31.0 | 5 | 14 | 20.5 | 5 | 8.5 | 5 | 7.5 | 32.1 | 80 | 92 | | 5 | 6 | 32.0 | 5 | 12 | 5 | 12 | 0 |
| 26 FT | 11 | 13 | 8 | 8 | 5 | 8.5 | 5 | 6.5 | 31.8 | 27.0 | 31.0 | | 5 | 14 | 31.0 | 5 | 14 | 21.0 | 5 | 9 | 5 | 7.5 | 32.3 | 81 | 93 | | 5 | 6 | 32.0 | 5 | 12 | 5 | 11 | 0 |
| 28 FT | 12 | 14 | 8 | 8 | 5 | 8.5 | 5 | 7 | 31.9 | 28.0 | 32.0 | | 5 | 13 | 30.5 | 5 | 13 | 20.0 | 5 | 9 | 5 | 8 | 32.6 | 82 | 94 | | 5 | 6.5 | 32.0 | 5 | 12 | 5 | 10 | 0 |
| 30 FT | 12 | 14 | 8 | 8 | 5 | 7.5 | 5 | 6.5 | 31.8 | 28.0 | 32.0 | | 5 | 13 | 30.5 | 5 | 13 | 20.5 | 5 | 8.5 | 5 | 7.5 | 32.5 | 82 | 94 | | 5 | 6 | 32.0 | 5 | 12 | 5 | 9.5 | 0 |
| 32 FT | 13 | 15 | 8 | 8 | 5 | 8 | 5 | 6.5 | 32.0 | 29.0 | 33.0 | | 5 | 12 | 30.0 | 5 | 12 | 20.0 | 5 | 8.5 | 5 | 7.5 | 32.8 | 83 | 95 | | 5 | 6 | 32.0 | 5 | 12 | 5 | 9.5 | 0 |
| 34 FT | 13 | 15 | 8 | 8 | 5 | 7 | 5 | 6 | 31.9 | 29.0 | 33.0 | | 5 | 12 | 30.0 | 5 | 12 | 20.0 | 5 | 8 | 5 | 7 | 32.8 | 83 | 95 | | 5 | 6 | 32.0 | 5 | 12 | 5 | 9.5 | 0 |
| 36 FT | 14 | 16 | 9 | 8 | 5 | 7.5 | 5 | 7.5 | 32.6 | 30.0 | 34.0 | | 5 | 12 | 29.5 | 5 | 12 | 19.5 | 5 | 8 | 5 | 8 | 33.3 | 84 | 96 | | 5 | 6 | 32.0 | 5 | 12 | 5 | 9 | 0 |
| 38 FT | 14 | 16 | 9 | 8 | 5 | 7 | 5 | 7 | 32.5 | 30.0 | 34.0 | | 5 | 12 | 29.5 | 5 | 12 | 19.5 | 5 | 8 | 5 | 8 | 33.1 | 84 | 96 | | 6 | 8 | 35.0 | 5 | 12 | 5 | 8.5 | 0 |
| 40 FT | 15 | 17 | 9 | 8 | 5 | 7 | 5 | 6.5 | 37.8 | 31.0 | 35.0 | | 5 | 13 | 34.0 | 5 | 13 | 24.5 | 5 | 8 | 5 | 8 | 33.5 | 85 | 97 | | 6 | 8.5 | 35.0 | 5 | 12 | 5 | 8.5 | 0 |
| 42 FT | 15 | 17 | 10 | 8 | 5 | 7 | 5 | 7.5 | 38.3 | 31.0 | 35.0 | | 5 | 12 | 34.0 | 5 | 12 | 24.5 | 5 | 7.5 | 5 | 7.5 | 33.6 | 85 | 97 | | 6 | 8 | 35.0 | 5 | 12 | 5 | 9 | 0 |
| 44 FT | 15 | 18 | 10 | 8 | 5 | 6 | 5 | 7 | 38.4 | 31.0 | 35.0 | | 5 | 12 | 34.0 | 5 | 12 | 24.5 | 5 | 7.5 | 5 | 7.5 | 33.9 | 86 | 98 | | 6 | 8 | 35.0 | 5 | 12 | 5 | 8.5 | 0 |
| 46 FT | 16 | 18 | 10 | 8 | 5 | 6.5 | 5 | 6.5 | 38.4 | 32.0 | 36.0 | | 5 | 12 | 33.0 | 5 | 12 | 24.5 | 5 | 7.5 | 5 | 7.5 | 34.0 | 86 | 98 | | 6 | 7.5 | 35.0 | 5 | 12 | 5 | 8 | 0 |
| 48 FT | 16 | 19 | 11 | 8 | 5 | 6.5 | 5 | 7 | 39.0 | 32.0 | 36.0 | | 5 | 12 | 33.0 | 5 | 12 | 24.5 | 5 | 7.5 | 5 | 8.5 | 34.4 | 87 | 99 | | 6 | 8 | 35.0 | 5 | 12 | 5 | 8.5 | 0 |
| 50 FT | 17 | 19 | 11 | 8 | 5 | 6.5 | 5 | 7 | 39.1 | 33.0 | 37.0 | | 5 | 13 | 32.5 | 5 | 13 | 24.5 | 5 | 7 | 5 | 8 | 34.5 | 87 | 99 | | 6 | 7.5 | 35.0 | 5 | 12 | 5 | 8 | 0 |

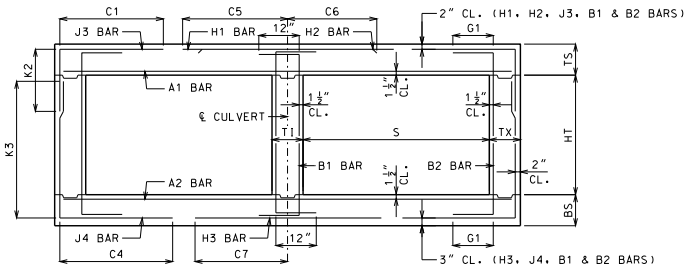


BAR DIMENSIONS DIAGRAM
SYMMETRICAL ABOUT ℄ CULVERT.

GENERAL NOTES:

IF DESIGN FILL IS BETWEEN TABULATED DESIGN FILLS, USE THE NEXT GREATER TABULATED DESIGN FILL, EXCEPT FOR DESIGN FILLS BETWEEN 2 FEET AND 4 FEET. FOR DESIGN FILLS BETWEEN 2 FEET AND 4 FEET USE THE GREATER MEMBER THICKNESS, AREA OF REINFORCEMENT AND BAR DIMENSIONS FROM THE 2 FEET AND 4 FEET TABULATED DESIGN FILLS. AREA OF REINFORCEMENT EQUALS BAR AREA PER FOOT SPACING.

SPECIAL DESIGNS ARE REQUIRED WHEN THE DESIGN FILL IS LESS THAN 1 FOOT OR GREATER THAN 50 FEET.

DIMENSIONS ARE IN INCHES UNLESS OTHERWISE SPECIFIED.

DESIGN FILLS ARE MEASURED FROM THE TOP OF TOP SLAB TO THE TOP OF EARTH FILL OR ROADWAY.

CULVERTS MEET STRENGTH AND SERVICEABILITY REQUIREMENTS FOR THE DESIGN VEHICULAR LIVE LOAD HL-93 MINUS THE LANE LOAD.


MISSOURI HIGHWAYS AND TRANSPORTATION COMMISSION
105 WEST CAPITOL
JEFFERSON CITY, MO 65102
1-888-ASK-MODOT (1-888-275-6636)


STATE OF MISSOURI
DENNIS W. HECKMAN
NUMBER PE-27141
PROFESSIONAL ENGINEER
THIS SHEET HAS BEEN SIGNED, SEALED AND DATED ELECTRONICALLY.

# CONCRETE DOUBLE BOX CULVERT

MEMBER THICKNESS
BAR SIZE, SPACING & DIMENSIONS

SPAN (S): 6 FEET
HEIGHT (HT): 3 THRU 7 FEET

DATE EFFECTIVE: 10/01/2011
DATE PREPARED: 9/8/2011

703.47

SHEET NO.
6 OF 27

IF A SEAL IS PRESENT ON THIS SHEET IT HAS BEEN ELECTRONICALLY SEALED AND DATED.

| SPAN (S) = 6 FT HEIGHT (HT) = 8 FT OR 9 FT | | | | | | | | | | | | | | | | | | | | | | | | | | | | | | | |
|---|---|---|---|---|---|---|---|---|---|---|---|---|---|---|---|---|---|---|---|---|---|---|---|---|---|---|---|---|---|---|---|
| DESIGN FILL | MEMBER THICKNESS | | | | TOP SLAB BARS | | | | | | | | | | | | | BOTTOM SLAB BARS | | | | | | | | | | WALL BARS | | | | |
| | | | | | A1 BARS | | J3 BARS | | | | | H1 BARS | | | H2 BARS | | | A2 BARS | | J4 BARS | | | | | H3 BARS | | | B1 BARS | | B2 BARS | | |
| | | | | | | | | | | K2 | | | | | | | | | | | | K3 | | | | | | | | | |
| | TS | BS | TX | TI | SIZE | SPA. | SIZE | SPA. | C1 | HT=8′ | HT=9′ | SIZE | SPA. | C5 | SIZE | SPA. | C6 | SIZE | SPA. | SIZE | SPA. | C4 | HT=8′ | HT=9′ | SIZE | SPA. | C7 | SIZE | SPA. | SIZE | SPA. | G1 |
| 1 FT | 11 | 9 | 8 | 8 | 5 | 8 | 4 | 7 | 34.5 | 27.0 | 27.0 | 4 | 16 | 64.5 | 4 | 16 | 23.5 | 4 | 9.5 | 4 | 6.5 | 59.4 | 101 | 113 | 4 | 6.5 | 34.5 | 5 | 12 | 5 | 12 | 12 |
| 2 FT | 11 | 9 | 8 | 8 | 5 | 8 | 4 | 6.5 | 34.5 | 27.0 | 27.0 | 4 | 16 | 64.5 | 4 | 16 | 23.0 | 4 | 9 | 4 | 6 | 57.0 | 101 | 113 | 4 | 6 | 34.0 | 5 | 12 | 5 | 12 | 12 |
| 4 FT | 8 | 9 | 9 | 8 | 4 | 7.5 | 4 | 6.5 | 35.1 | 24.0 | 24.0 | 4 | 13 | 65.0 | 4 | 13 | 21.0 | 4 | 9.5 | 4 | 6.5 | 53.0 | 101 | 113 | 4 | 6 | 33.5 | 5 | 12 | 5 | 12 | 12 |
| 6 FT | 8 | 9 | 9 | 8 | 4 | 9 | 4 | 6 | 53.1 | 24.0 | 24.0 | 4 | 13 | 36.0 | 4 | 13 | 20.5 | 4 | 9 | 4 | 6 | 49.5 | 101 | 113 | 4 | 6 | 33.0 | 5 | 12 | 5 | 12 | 12 |
| 8 FT | 8 | 9 | 9 | 8 | 4 | 9 | 5 | 7 | 46.5 | 24.0 | 28.0 | 4 | 12 | 33.5 | 4 | 12 | 20.5 | 4 | 8 | 5 | 6.5 | 46.5 | 101 | 113 | 5 | 7.5 | 32.5 | 5 | 12 | 5 | 12 | 0 |
| 10 FT | 8 | 9 | 9 | 8 | 4 | 8 | 5 | 6 | 43.8 | 24.0 | 28.0 | 5 | 17 | 32.5 | 5 | 17 | 20.5 | 4 | 7.5 | 5 | 6 | 44.6 | 101 | 113 | 5 | 6.5 | 32.0 | 5 | 12 | 5 | 11.5 | 0 |
| 12 FT | 8 | 9 | 10 | 8 | 4 | 7.5 | 5 | 6.5 | 41.8 | 24.0 | 28.0 | 5 | 17 | 32.0 | 5 | 17 | 21.5 | 4 | 6.5 | 5 | 6.5 | 42.9 | 101 | 113 | 5 | 6.5 | 32.0 | 5 | 12 | 5 | 11.5 | 0 |
| 14 FT | 8 | 9 | 10 | 8 | 4 | 7.5 | 5 | 6.5 | 38.5 | 24.0 | 28.0 | 5 | 17 | 31.0 | 5 | 17 | 21.0 | 4 | 6.5 | 5 | 6.5 | 39.6 | 101 | 113 | 5 | 6 | 31.5 | 5 | 12 | 5 | 12 | 0 |
| 16 FT | 8 | 10 | 10 | 8 | 4 | 6.5 | 5 | 6 | 38.1 | 24.0 | 28.0 | 5 | 16 | 31.0 | 5 | 16 | 22.0 | 4 | 6.5 | 5 | 7 | 40.6 | 102 | 114 | 5 | 6.5 | 32.0 | 5 | 12 | 5 | 11.5 | 0 |
| 18 FT | 9 | 11 | 10 | 8 | 4 | 6.5 | 5 | 6 | 38.8 | 25.0 | 29.0 | 5 | 16 | 31.0 | 5 | 16 | 21.0 | 4 | 6.5 | 5 | 7 | 41.1 | 103 | 115 | 5 | 7 | 32.0 | 5 | 12 | 5 | 10.5 | 0 |
| 20 FT | 9 | 11 | 10 | 8 | 4 | 6 | 5 | 6 | 38.5 | 25.0 | 29.0 | 5 | 16 | 31.0 | 5 | 16 | 22.0 | 4 | 6 | 5 | 6.5 | 40.9 | 103 | 115 | 5 | 6 | 32.0 | 5 | 12 | 5 | 10 | 0 |
| 22 FT | 10 | 12 | 10 | 8 | 4 | 6 | 5 | 6.5 | 39.1 | 30.0 | 30.0 | 5 | 15 | 30.5 | 5 | 15 | 21.0 | 4 | 6 | 5 | 6.5 | 41.4 | 104 | 116 | 5 | 6.5 | 32.0 | 5 | 12 | 5 | 9 | 0 |
| 24 FT | 11 | 13 | 10 | 8 | 4 | 6 | 5 | 6.5 | 39.6 | 31.0 | 31.0 | 5 | 14 | 30.5 | 5 | 14 | 20.0 | 4 | 6 | 5 | 6.5 | 41.8 | 105 | 117 | 5 | 6.5 | 32.0 | 5 | 12 | 5 | 8.5 | 0 |
| 26 FT | 11 | 13 | 10 | 8 | 5 | 9 | 5 | 6 | 39.4 | 31.0 | 31.0 | 5 | 14 | 30.5 | 5 | 14 | 20.5 | 5 | 9 | 5 | 6.5 | 41.6 | 105 | 117 | 5 | 6 | 32.0 | 5 | 12 | 5 | 8 | 0 |
| 28 FT | 12 | 14 | 10 | 8 | 5 | 9 | 5 | 6 | 40.0 | 32.0 | 32.0 | 5 | 13 | 30.0 | 5 | 13 | 19.5 | 4 | 6 | 5 | 6.5 | 42.0 | 106 | 118 | 5 | 6.5 | 32.0 | 5 | 12 | 5 | 8 | 0 |
| 30 FT | 12 | 14 | 10 | 8 | 5 | 8 | 5 | 6 | 39.9 | 32.0 | 32.0 | 5 | 13 | 30.0 | 5 | 13 | 20.0 | 5 | 8.5 | 5 | 6 | 41.9 | 106 | 118 | 5 | 6 | 32.0 | 5 | 12 | 5 | 8 | 0 |
| 32 FT | 13 | 15 | 11 | 8 | 5 | 8.5 | 5 | 7 | 40.4 | 33.0 | 33.0 | 5 | 13 | 29.0 | 5 | 13 | 19.5 | 5 | 8.5 | 5 | 7 | 42.3 | 107 | 119 | 5 | 6 | 32.0 | 5 | 12 | 5 | 7.5 | 0 |
| 34 FT | 13 | 15 | 11 | 8 | 5 | 8 | 5 | 6.5 | 40.3 | 33.0 | 33.0 | 5 | 13 | 29.0 | 5 | 13 | 19.5 | 5 | 8 | 5 | 7 | 42.1 | 107 | 119 | 6 | 8 | 35.0 | 5 | 12 | 5 | 7.5 | 0 |
| 36 FT | 14 | 16 | 11 | 8 | 5 | 8 | 5 | 6 | 40.8 | 34.0 | 34.0 | 5 | 14 | 28.5 | 5 | 14 | 19.5 | 5 | 8.5 | 5 | 7 | 42.6 | 108 | 120 | 5 | 6 | 32.0 | 5 | 12 | 5 | 7.5 | 0 |
| 38 FT | 14 | 16 | 12 | 8 | 5 | 7.5 | 5 | 6.5 | 40.8 | 34.0 | 34.0 | 5 | 13 | 28.5 | 5 | 13 | 19.5 | 5 | 7.5 | 5 | 6.5 | 42.5 | 108 | 120 | 6 | 8 | 35.0 | 5 | 12 | 5 | 7 | 0 |
| 40 FT | 14 | 17 | 12 | 8 | 5 | 7 | 5 | 6 | 40.8 | 34.0 | 34.0 | 5 | 12 | 28.5 | 5 | 12 | 19.5 | 5 | 8 | 5 | 6.5 | 43.0 | 109 | 121 | 6 | 8 | 35.0 | 5 | 12 | 5 | 7 | 0 |
| 42 FT | 15 | 17 | 13 | 8 | 5 | 7 | 5 | 6 | 46.4 | 35.0 | 35.0 | 5 | 13 | 33.0 | 5 | 13 | 24.5 | 5 | 7 | 5 | 6 | 42.8 | 109 | 121 | 6 | 7.5 | 35.0 | 5 | 12 | 5 | 7 | 0 |
| 44 FT | 15 | 18 | 13 | 8 | 5 | 7 | 5 | 6 | 46.4 | 35.0 | 35.0 | 5 | 13 | 33.0 | 5 | 13 | 24.5 | 5 | 7.5 | 5 | 6 | 43.3 | 110 | 122 | 6 | 8 | 35.0 | 5 | 12 | 5 | 6.5 | 0 |
| 46 FT | 15 | 18 | 13 | 8 | 5 | 6 | 5 | 6 | 46.3 | 35.0 | 35.0 | 5 | 12 | 33.0 | 5 | 12 | 24.5 | 5 | 7.5 | 5 | 6 | 43.3 | 110 | 122 | 6 | 7.5 | 35.0 | 5 | 12 | 5 | 6.5 | 0 |
| 48 FT | 16 | 19 | 14 | 8 | 5 | 6.5 | 5 | 6 | 47.0 | 36.0 | 36.0 | 5 | 14 | 32.5 | 5 | 14 | 24.0 | 5 | 7.5 | 5 | 6 | 43.8 | 111 | 123 | 6 | 7.5 | 35.0 | 5 | 12 | 5 | 6.5 | 0 |
| 50 FT | 16 | 19 | 14 | 8 | 5 | 6 | 5 | 6 | 46.9 | 36.0 | 36.0 | 5 | 13 | 32.5 | 5 | 13 | 24.0 | 5 | 7 | 5 | 6 | 43.6 | 111 | 123 | 6 | 7.5 | 35.0 | 5 | 12 | 5 | 6.5 | 0 |

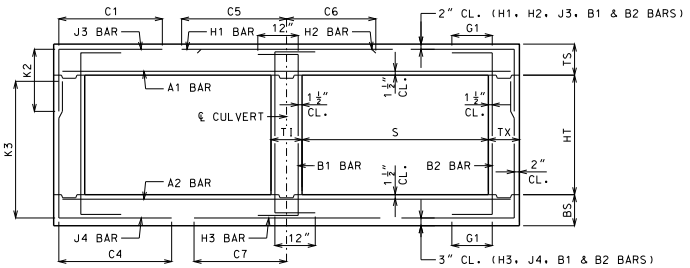


BAR DIMENSIONS DIAGRAM
SYMMETRICAL ABOUT ℄ CULVERT.

GENERAL NOTES:

IF DESIGN FILL IS BETWEEN TABULATED DESIGN FILLS, USE THE NEXT GREATER TABULATED DESIGN FILL, EXCEPT FOR DESIGN FILLS BETWEEN 2 FEET AND 4 FEET. FOR DESIGN FILLS BETWEEN 2 FEET AND 4 FEET USE THE GREATER MEMBER THICKNESS, AREA OF REINFORCEMENT AND BAR DIMENSIONS FROM THE 2 FEET AND 4 FEET TABULATED DESIGN FILLS. AREA OF REINFORCEMENT EQUALS BAR AREA PER FOOT SPACING.

SPECIAL DESIGNS ARE REQUIRED WHEN THE DESIGN FILL IS LESS THAN 1 FOOT OR GREATER THAN 50 FEET.

DIMENSIONS ARE IN INCHES UNLESS OTHERWISE SPECIFIED.

DESIGN FILLS ARE MEASURED FROM THE TOP OF TOP SLAB TO THE TOP OF EARTH FILL OR ROADWAY.

CULVERTS MEET STRENGTH AND SERVICEABILITY REQUIREMENTS FOR THE DESIGN VEHICULAR LIVE LOAD HL-93 MINUS THE LANE LOAD.


MISSOURI HIGHWAYS AND TRANSPORTATION COMMISSION
105 WEST CAPITOL
JEFFERSON CITY, MO 65102
1-888-ASK-MODOT (1-888-275-6636)


STATE OF MISSOURI
DENNIS W. HECKMANN
NUMBER PE-27141
PROFESSIONAL ENGINEER
THIS SHEET HAS BEEN SIGNED, SEALED AND DATED ELECTRONICALLY.

# CONCRETE DOUBLE BOX CULVERT

MEMBER THICKNESS
BAR SIZE, SPACING & DIMENSIONS

SPAN (S): 6 FEET
HEIGHT (HT): 8 THRU 9 FEET

DATE EFFECTIVE: 10/01/2011
DATE PREPARED: 9/8/2011

703.47

SHEET NO.
7 OF 27

IF A SEAL IS PRESENT ON THIS SHEET IT HAS BEEN ELECTRONICALLY SEALED AND DATED.

SPAN (S) = 7 FT  HEIGHT (HT) = 4 FT OR 5 FT OR 6 FT

| DESIGN FILL | MEMBER THICKNESS | | | | TOP SLAB BARS | | | | | | | | | | | | | BOTTOM SLAB BARS | | | | | | | | | | | | WALL BARS | | | | |
|---|---|---|---|---|---|---|---|---|---|---|---|---|---|---|---|---|---|---|---|---|---|---|---|---|---|---|---|---|---|---|---|---|---|---|
| | | | | | A1 BARS | | J3 BARS | | | | | | H1 BARS | | | H2 BARS | | | A2 BARS | | J4 BARS | | | | | H3 BARS | | | B1 BARS | | B2 BARS | | |
| | | | | | | | | | | K2 | | | | | | | | | | | | | K3 | | | | | | | | | |
| | TS | BS | TX | TI | SIZE | SPA. | SIZE | SPA. | C1 | HT=4′ | HT=5′ | HT=6′ | SIZE | SPA. | C5 | SIZE | SPA. | C6 | SIZE | SPA. | SIZE | SPA. | C4 | HT=4′ | HT=5′ | HT=6′ | SIZE | SPA. | C7 | SIZE | SPA. | SIZE | SPA. | G1 |
| 1 FT | 12 | 8 | 8 | 8 | 5 | 8 | 4 | 8.5 | 38.1 | 28.0 | 28.0 | 28.0 | 4 | 15 | 73.0 | 4 | 15 | 25.5 | 4 | 7 | 4 | 6.5 | 41.8 | 52 | 64 | 76 | 5 | 6.5 | 37.5 | 5 | 12 | 5 | 12 | 12 |
| 2 FT | 12 | 9 | 8 | 8 | 5 | 7.5 | 4 | 8.5 | 38.1 | 28.0 | 28.0 | 28.0 | 4 | 14 | 73.0 | 4 | 14 | 24.5 | 4 | 7.5 | 4 | 8.5 | 39.9 | 53 | 65 | 77 | 5 | 7 | 37.5 | 5 | 12 | 5 | 12 | 12 |
| 4 FT | 8 | 8 | 8 | 8 | 4 | 6 | 4 | 6.5 | 38.4 | 24.0 | 24.0 | 24.0 | 5 | 17 | 48.0 | 5 | 17 | 23.5 | 4 | 7 | 4 | 7 | 35.8 | 52 | 64 | 76 | 5 | 6 | 36.5 | 5 | 12 | 5 | 12 | 12 |
| 6 FT | 8 | 8 | 8 | 8 | 4 | 7 | 4 | 7 | 33.9 | 24.0 | 24.0 | 24.0 | 5 | 17 | 39.0 | 5 | 17 | 23.5 | 4 | 6.5 | 4 | 6.5 | 33.3 | 52 | 64 | 76 | 6 | 7 | 38.5 | 5 | 12 | 5 | 12 | 12 |
| 8 FT | 8 | 9 | 8 | 8 | 4 | 7 | 4 | 6.5 | 32.1 | 24.0 | 24.0 | 24.0 | 5 | 16 | 37.0 | 5 | 16 | 24.0 | 4 | 6.5 | 4 | 8 | 31.8 | 53 | 65 | 77 | 5 | 6 | 35.5 | 5 | 12 | 5 | 12 | 0 |
| 10 FT | 8 | 10 | 8 | 8 | 4 | 6 | 5 | 7 | 31.5 | 24.0 | 24.0 | 24.0 | 5 | 15 | 36.0 | 5 | 15 | 24.0 | 4 | 6.5 | 4 | 9.5 | 30.5 | 54 | 66 | 78 | 5 | 6.5 | 35.5 | 5 | 12 | 5 | 12 | 0 |
| 12 FT | 9 | 10 | 8 | 8 | 4 | 6 | 4 | 6.5 | 30.5 | 25.0 | 25.0 | 25.0 | 5 | 15 | 35.5 | 5 | 15 | 24.0 | 5 | 9 | 4 | 8.5 | 29.8 | 54 | 66 | 78 | 5 | 6 | 35.5 | 5 | 12 | 5 | 12 | 0 |
| 14 FT | 9 | 11 | 8 | 8 | 5 | 8.5 | 5 | 7 | 30.4 | 25.0 | 25.0 | 25.0 | 5 | 14 | 35.5 | 5 | 14 | 24.0 | 5 | 9 | 4 | 8.5 | 29.1 | 55 | 67 | 79 | 5 | 6 | 35.5 | 5 | 12 | 5 | 12 | 0 |
| 16 FT | 10 | 11 | 8 | 8 | 4 | 6 | 4 | 6.5 | 28.5 | 26.0 | 26.0 | 26.0 | 5 | 15 | 34.5 | 5 | 15 | 23.0 | 5 | 8.5 | 4 | 8 | 27.8 | 55 | 67 | 79 | 5 | 6 | 35.0 | 5 | 12 | 5 | 12 | 0 |
| 18 FT | 10 | 12 | 8 | 8 | 5 | 8 | 5 | 8 | 28.6 | 26.0 | 26.0 | 26.0 | 5 | 14 | 34.5 | 5 | 14 | 23.5 | 5 | 8.5 | 4 | 8.5 | 27.4 | 56 | 68 | 80 | 5 | 6 | 35.0 | 5 | 12 | 5 | 12 | 0 |
| 20 FT | 11 | 12 | 8 | 8 | 5 | 8 | 5 | 9 | 28.1 | 27.0 | 27.0 | 27.0 | 5 | 14 | 34.5 | 5 | 14 | 23.5 | 5 | 7 | 4 | 7 | 27.5 | 56 | 68 | 80 | 6 | 7 | 38.0 | 5 | 12 | 5 | 12 | 0 |
| 22 FT | 12 | 13 | 8 | 8 | 5 | 8 | 5 | 8.5 | 27.9 | 28.0 | 28.0 | 28.0 | 5 | 13 | 34.5 | 5 | 13 | 23.0 | 5 | 7.5 | 4 | 7 | 27.5 | 57 | 69 | 81 | 6 | 7.5 | 38.0 | 5 | 12 | 5 | 12 | 0 |
| 24 FT | 12 | 14 | 8 | 8 | 5 | 7.5 | 5 | 8.5 | 28.0 | 28.0 | 28.0 | 28.0 | 5 | 13 | 34.5 | 5 | 13 | 23.5 | 5 | 7.5 | 4 | 7 | 27.3 | 58 | 70 | 82 | 6 | 7.5 | 38.0 | 5 | 12 | 5 | 12 | 0 |
| 26 FT | 13 | 15 | 8 | 8 | 5 | 7 | 5 | 8.5 | 27.9 | 29.0 | 29.0 | 29.0 | 5 | 12 | 34.5 | 5 | 12 | 22.5 | 5 | 7.5 | 4 | 7 | 27.4 | 59 | 71 | 83 | 6 | 7.5 | 38.0 | 5 | 12 | 5 | 12 | 0 |
| 28 FT | 14 | 15 | 8 | 8 | 5 | 7 | 5 | 8.5 | 27.6 | 30.0 | 30.0 | 30.0 | 5 | 12 | 34.0 | 5 | 12 | 22.0 | 5 | 7 | 4 | 6.5 | 27.6 | 59 | 71 | 83 | 6 | 7 | 38.0 | 5 | 12 | 5 | 12 | 0 |
| 30 FT | 14 | 16 | 8 | 8 | 5 | 6.5 | 5 | 8.5 | 27.8 | 30.0 | 30.0 | 30.0 | 5 | 12 | 34.0 | 5 | 12 | 22.5 | 5 | 7 | 4 | 6.5 | 27.5 | 60 | 72 | 84 | 6 | 7 | 38.0 | 5 | 12 | 5 | 12 | 0 |
| 32 FT | 15 | 17 | 8 | 8 | 5 | 6.5 | 5 | 8 | 32.8 | 31.0 | 31.0 | 31.0 | 6 | 16 | 43.0 | 6 | 16 | 30.5 | 5 | 7.5 | 4 | 6 | 27.8 | 61 | 73 | 85 | 6 | 7.5 | 38.0 | 5 | 12 | 5 | 12 | 0 |
| 34 FT | 16 | 17 | 8 | 8 | 5 | 6.5 | 5 | 7 | 32.6 | 32.0 | 32.0 | 32.0 | 6 | 15 | 42.5 | 6 | 15 | 29.5 | 5 | 7 | 4 | 6 | 27.9 | 61 | 73 | 85 | 6 | 7 | 38.0 | 5 | 12 | 5 | 11.5 | 0 |
| 36 FT | 16 | 18 | 8 | 8 | 5 | 6 | 5 | 7 | 32.8 | 32.0 | 36.0 | 36.0 | 6 | 15 | 42.5 | 6 | 15 | 30.0 | 5 | 7 | 5 | 6.5 | 27.9 | 62 | 74 | 86 | 6 | 7 | 38.0 | 5 | 12 | 5 | 10.5 | 0 |
| 38 FT | 17 | 18 | 8 | 8 | 5 | 6 | 5 | 6.5 | 32.8 | 37.0 | 37.0 | 37.0 | 6 | 14 | 42.0 | 6 | 14 | 29.5 | 5 | 6 | 5 | 6.5 | 28.0 | 62 | 74 | 86 | 6 | 6.5 | 38.0 | 5 | 12 | 5 | 10 | 0 |
| 40 FT | 17 | 19 | 8 | 8 | 5 | 6 | 5 | 6.5 | 32.8 | 37.0 | 37.0 | 37.0 | 6 | 14 | 42.0 | 6 | 14 | 30.0 | 5 | 6.5 | 5 | 6.5 | 28.0 | 63 | 75 | 87 | 6 | 7 | 38.0 | 5 | 12 | 5 | 9.5 | 0 |
| 42 FT | 18 | 20 | 8 | 8 | 5 | 6 | 5 | 6.5 | 32.9 | 38.0 | 38.0 | 38.0 | 6 | 14 | 41.5 | 6 | 14 | 29.5 | 5 | 6.5 | 5 | 6 | 28.3 | 64 | 76 | 88 | 6 | 7 | 38.0 | 5 | 12 | 5 | 9.5 | 0 |
| 44 FT | 18 | 20 | 8 | 8 | 6 | 8 | 5 | 6.5 | 32.9 | 38.0 | 38.0 | 38.0 | 6 | 14 | 41.5 | 6 | 14 | 29.5 | 5 | 6.5 | 5 | 6 | 28.3 | 64 | 76 | 88 | 6 | 6.5 | 38.0 | 5 | 12 | 5 | 9.5 | 0 |
| 46 FT | 19 | 21 | 8 | 8 | 6 | 8 | 5 | 6 | 33.0 | 39.0 | 39.0 | 39.0 | 6 | 14 | 41.0 | 6 | 14 | 29.5 | 5 | 6.5 | 6 | 7.5 | 31.5 | 65 | 77 | 89 | 6 | 6.5 | 38.0 | 5 | 12 | 5 | 9.5 | 0 |
| 48 FT | 19 | 21 | 8 | 8 | 6 | 8 | 5 | 6 | 32.9 | 39.0 | 39.0 | 39.0 | 6 | 14 | 41.0 | 6 | 14 | 29.5 | 5 | 6 | 6 | 7.5 | 31.4 | 65 | 77 | 89 | 6 | 6.5 | 38.0 | 5 | 12 | 5 | 9.5 | 0 |
| 50 FT | 20 | 22 | 9 | 8 | 6 | 8 | 5 | 6.5 | 33.8 | 40.0 | 40.0 | 40.0 | 6 | 15 | 40.0 | 6 | 15 | 29.0 | 5 | 6 | 5 | 6 | 29.0 | 66 | 78 | 90 | 6 | 6.5 | 38.0 | 5 | 12 | 5 | 8.5 | 0 |

SPAN (S) = 7 FT  HEIGHT (HT) = 7 FT OR 8 FT

| DESIGN FILL | MEMBER THICKNESS | | | | TOP SLAB BARS | | | | | | | | | | | | | BOTTOM SLAB BARS | | | | | | | | | | | | WALL BARS | | | | |
|---|---|---|---|---|---|---|---|---|---|---|---|---|---|---|---|---|---|---|---|---|---|---|---|---|---|---|---|---|---|---|---|---|---|---|
| | | | | | A1 BARS | | J3 BARS | | | | | | H1 BARS | | | H2 BARS | | | A2 BARS | | J4 BARS | | | | | H3 BARS | | | B1 BARS | | B2 BARS | | |
| | | | | | | | | | | K2 | | | | | | | | | | | | | K3 | | | | | | | | | |
| | TS | BS | TX | TI | SIZE | SPA. | SIZE | SPA. | C1 | HT=7′ | HT=8′ | | SIZE | SPA. | C5 | SIZE | SPA. | C6 | SIZE | SPA. | SIZE | SPA. | C4 | HT=7′ | HT=8′ | | SIZE | SPA. | C7 | SIZE | SPA. | SIZE | SPA. | G1 |
| 1 FT | 12 | 9 | 8 | 8 | 5 | 7.5 | 4 | 8.5 | 38.1 | 28.0 | 28.0 | | 4 | 15 | 73.0 | 4 | 15 | 25.5 | 4 | 7.5 | 4 | 7 | 56.0 | 89 | 101 | | 5 | 7 | 37.5 | 5 | 12 | 5 | 12 | 12 |
| 2 FT | 12 | 9 | 8 | 8 | 5 | 7.5 | 4 | 8 | 38.1 | 28.0 | 28.0 | | 4 | 15 | 73.0 | 4 | 15 | 25.0 | 4 | 7 | 4 | 6.5 | 51.4 | 89 | 101 | | 5 | 7 | 37.5 | 5 | 12 | 5 | 12 | 12 |
| 4 FT | 8 | 9 | 8 | 8 | 4 | 6 | 5 | 6.5 | 40.1 | 24.0 | 24.0 | | 5 | 17 | 75.0 | 5 | 17 | 23.5 | 4 | 7.5 | 4 | 6.5 | 47.8 | 89 | 101 | | 5 | 7 | 37.0 | 5 | 12 | 5 | 12 | 12 |
| 6 FT | 8 | 9 | 8 | 8 | 4 | 7 | 5 | 6.5 | 44.6 | 24.0 | 24.0 | | 5 | 17 | 39.5 | 5 | 17 | 23.5 | 4 | 7 | 4 | 6 | 43.5 | 89 | 101 | | 5 | 6.5 | 36.0 | 5 | 12 | 5 | 12 | 12 |
| 8 FT | 8 | 9 | 9 | 8 | 4 | 7 | 4 | 6 | 40.1 | 24.0 | 24.0 | | 5 | 16 | 37.0 | 5 | 16 | 23.5 | 4 | 6.5 | 4 | 6.5 | 40.4 | 89 | 101 | | 5 | 6 | 35.5 | 5 | 12 | 5 | 12 | 0 |
| 10 FT | 8 | 10 | 9 | 8 | 4 | 6.5 | 5 | 6 | 38.4 | 24.0 | 24.0 | | 5 | 15 | 36.0 | 5 | 15 | 24.0 | 4 | 6.5 | 4 | 7 | 39.5 | 90 | 102 | | 5 | 6.5 | 35.5 | 5 | 12 | 5 | 12 | 0 |
| 12 FT | 9 | 10 | 9 | 8 | 4 | 6 | 5 | 6.5 | 37.8 | 25.0 | 25.0 | | 5 | 15 | 35.5 | 5 | 15 | 24.0 | 5 | 9 | 4 | 6 | 38.1 | 90 | 102 | | 5 | 6 | 35.0 | 5 | 12 | 5 | 12 | 0 |
| 14 FT | 9 | 11 | 9 | 8 | 5 | 8.5 | 5 | 6 | 37.1 | 25.0 | 25.0 | | 5 | 14 | 35.0 | 5 | 14 | 23.5 | 5 | 9 | 4 | 6 | 37.9 | 91 | 103 | | 5 | 6 | 35.5 | 5 | 12 | 5 | 12 | 0 |
| 16 FT | 9 | 11 | 9 | 8 | 5 | 8.5 | 5 | 6 | 34.8 | 25.0 | 25.0 | | 5 | 14 | 34.0 | 5 | 14 | 23.5 | 5 | 8.5 | 4 | 6 | 35.3 | 91 | 103 | | 5 | 6 | 35.0 | 5 | 12 | 5 | 12 | 0 |
| 18 FT | 10 | 12 | 9 | 8 | 5 | 8.5 | 5 | 7 | 34.9 | 26.0 | 30.0 | | 5 | 14 | 34.0 | 5 | 14 | 23.5 | 5 | 8.5 | 5 | 8.5 | 35.3 | 92 | 104 | | 5 | 6 | 35.0 | 5 | 12 | 5 | 12 | 0 |
| 20 FT | 11 | 13 | 9 | 8 | 5 | 8 | 5 | 7.5 | 34.9 | 27.0 | 31.0 | | 5 | 14 | 34.0 | 5 | 14 | 23.0 | 5 | 8.5 | 5 | 8 | 35.4 | 93 | 105 | | 6 | 8 | 38.0 | 5 | 12 | 5 | 12 | 0 |
| 22 FT | 11 | 13 | 9 | 8 | 5 | 7 | 5 | 6.5 | 34.8 | 27.0 | 31.0 | | 5 | 13 | 34.0 | 5 | 13 | 23.5 | 5 | 7.5 | 5 | 8 | 35.1 | 93 | 105 | | 6 | 7.5 | 38.0 | 5 | 12 | 5 | 11.5 | 0 |
| 24 FT | 12 | 14 | 9 | 8 | 5 | 7.5 | 5 | 7 | 34.8 | 28.0 | 32.0 | | 5 | 13 | 34.0 | 5 | 13 | 23.0 | 5 | 8 | 5 | 8 | 35.4 | 94 | 106 | | 6 | 7.5 | 38.0 | 5 | 12 | 5 | 10.5 | 0 |
| 26 FT | 13 | 15 | 9 | 8 | 5 | 7.5 | 5 | 7 | 34.9 | 29.0 | 33.0 | | 5 | 12 | 33.5 | 5 | 12 | 22.0 | 5 | 8 | 5 | 8 | 35.6 | 95 | 107 | | 6 | 7.5 | 38.0 | 5 | 12 | 5 | 9.5 | 0 |
| 28 FT | 13 | 15 | 9 | 8 | 5 | 6.5 | 5 | 6.5 | 34.8 | 33.0 | 33.0 | | 5 | 12 | 33.5 | 5 | 12 | 22.5 | 5 | 7 | 5 | 7.5 | 35.4 | 95 | 107 | | 6 | 7 | 38.0 | 5 | 12 | 5 | 9 | 0 |
| 30 FT | 14 | 16 | 9 | 8 | 5 | 7 | 5 | 6.5 | 34.9 | 34.0 | 34.0 | | 5 | 12 | 33.0 | 5 | 12 | 21.5 | 5 | 7.5 | 5 | 7.5 | 35.6 | 96 | 108 | | 6 | 7 | 38.0 | 5 | 12 | 5 | 8.5 | 0 |
| 32 FT | 15 | 17 | 9 | 8 | 5 | 7 | 5 | 6 | 40.0 | 35.0 | 35.0 | | 6 | 16 | 41.5 | 6 | 16 | 29.5 | 5 | 7.5 | 5 | 7.5 | 36.0 | 97 | 109 | | 6 | 7.5 | 38.0 | 5 | 12 | 5 | 8.5 | 0 |
| 34 FT | 15 | 17 | 10 | 8 | 5 | 6.5 | 5 | 7 | 40.5 | 35.0 | 35.0 | | 6 | 16 | 41.5 | 6 | 16 | 30.0 | 5 | 6.5 | 5 | 7.5 | 36.0 | 97 | 109 | | 6 | 7 | 38.0 | 5 | 12 | 5 | 8.5 | 0 |
| 36 FT | 16 | 18 | 10 | 8 | 5 | 6.5 | 5 | 6.5 | 40.6 | 36.0 | 36.0 | | 6 | 15 | 41.0 | 6 | 15 | 29.5 | 5 | 7 | 5 | 7.5 | 36.4 | 98 | 110 | | 6 | 7 | 38.0 | 5 | 12 | 5 | 8 | 0 |
| 38 FT | 16 | 19 | 11 | 8 | 5 | 6 | 5 | 7 | 41.3 | 32.0 | 36.0 | | 6 | 15 | 40.5 | 6 | 15 | 29.5 | 5 | 7 | 5 | 7 | 36.8 | 99 | 111 | | 6 | 7 | 38.0 | 5 | 12 | 5 | 8.5 | 0 |
| 40 FT | 17 | 19 | 11 | 8 | 5 | 6 | 5 | 7 | 41.3 | 33.0 | 37.0 | | 6 | 15 | 40.0 | 6 | 15 | 29.0 | 5 | 6.5 | 5 | 7 | 36.8 | 99 | 111 | | 6 | 6.5 | 38.0 | 5 | 12 | 5 | 8 | 0 |
| 42 FT | 17 | 20 | 11 | 8 | 5 | 6 | 5 | 6.5 | 41.4 | 37.0 | 37.0 | | 6 | 15 | 40.0 | 6 | 15 | 29.0 | 5 | 6.5 | 5 | 7 | 36.9 | 100 | 112 | | 6 | 7 | 38.0 | 5 | 12 | 5 | 7.5 | 0 |
| 44 FT | 18 | 20 | 11 | 8 | 6 | 8.5 | 5 | 6 | 41.4 | 38.0 | 38.0 | | 6 | 16 | 39.5 | 6 | 16 | 29.0 | 5 | 6.5 | 5 | 7 | 37.0 | 100 | 112 | | 6 | 6.5 | 38.0 | 5 | 12 | 5 | 7.5 | 0 |
| 46 FT | 18 | 21 | 12 | 8 | 6 | 8 | 5 | 6.5 | 42.1 | 38.0 | 38.0 | | 6 | 15 | 39.5 | 6 | 15 | 29.0 | 5 | 6.5 | 5 | 7 | 37.4 | 101 | 113 | | 6 | 6.5 | 38.0 | 5 | 12 | 5 | 7.5 | 0 |
| 48 FT | 19 | 21 | 12 | 8 | 6 | 8 | 5 | 6.5 | 42.0 | 39.0 | 39.0 | | 6 | 16 | 39.0 | 6 | 16 | 29.0 | 5 | 6 | 5 | 6.5 | 37.5 | 101 | 113 | | 6 | 6.5 | 38.0 | 5 | 12 | 5 | 7 | 0 |
| 50 FT | 19 | 22 | 12 | 8 | 6 | 7.5 | 5 | 6 | 42.1 | 39.0 | 39.0 | | 6 | 15 | 39.0 | 6 | 15 | 29.0 | 5 | 6 | 5 | 6.5 | 37.6 | 102 | 114 | | 6 | 6.5 | 38.0 | 5 | 12 | 5 | 7 | 0 |

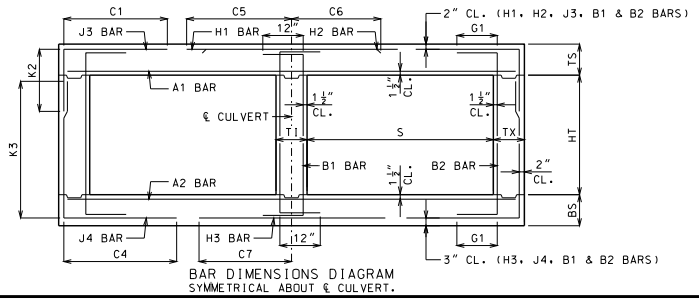


BAR DIMENSIONS DIAGRAM
SYMMETRICAL ABOUT ℄ CULVERT.

GENERAL NOTES:

IF DESIGN FILL IS BETWEEN TABULATED DESIGN FILLS, USE THE NEXT GREATER TABULATED DESIGN FILL, EXCEPT FOR DESIGN FILLS BETWEEN 2 FEET AND 4 FEET. FOR DESIGN FILLS BETWEEN 2 FEET AND 4 FEET USE THE GREATER MEMBER THICKNESS, AREA OF REINFORCEMENT AND BAR DIMENSIONS FROM THE 2 FEET AND 4 FEET TABULATED DESIGN FILLS. AREA OF REINFORCEMENT EQUALS BAR AREA PER FOOT SPACING.

SPECIAL DESIGNS ARE REQUIRED WHEN THE DESIGN FILL IS LESS THAN 1 FOOT OR GREATER THAN 50 FEET.

DIMENSIONS ARE IN INCHES UNLESS OTHERWISE SPECIFIED.

DESIGN FILLS ARE MEASURED FROM THE TOP OF TOP SLAB TO THE TOP OF EARTH FILL OR ROADWAY.

CULVERTS MEET STRENGTH AND SERVICEABILITY REQUIREMENTS FOR THE DESIGN VEHICULAR LIVE LOAD HL-93 MINUS THE LANE LOAD.


MISSOURI HIGHWAYS AND TRANSPORTATION COMMISSION
105 WEST CAPITOL
JEFFERSON CITY, MO 65102
1-888-ASK-MODOT (1-888-275-6636)


STATE OF MISSOURI
DENNIS W. HECKMANN
NUMBER PE-27141
PROFESSIONAL ENGINEER
THIS SHEET HAS BEEN SIGNED, SEALED AND DATED ELECTRONICALLY.

# CONCRETE DOUBLE BOX CULVERT

MEMBER THICKNESS
BAR SIZE, SPACING & DIMENSIONS

SPAN (S): 7 FEET
HEIGHT (HT): 4 THRU 8 FEET

DATE EFFECTIVE: 10/01/2011
DATE PREPARED: 9/8/2011

703.47

SHEET NO.
8 OF 27

IF A SEAL IS PRESENT ON THIS SHEET IT HAS BEEN ELECTRONICALLY SEALED AND DATED.

| SPAN (S) = 7 FT HEIGHT (HT) = 9 FT OR 10 FT | | | | | | | | | | | | | | | | | | | | | | | | | | | | | | | |
|---|---|---|---|---|---|---|---|---|---|---|---|---|---|---|---|---|---|---|---|---|---|---|---|---|---|---|---|---|---|---|---|
| DESIGN FILL | MEMBER THICKNESS | | | | TOP SLAB BARS | | | | | | | | | | | | | BOTTOM SLAB BARS | | | | | | | | | | | WALL BARS | | | | |
| | | | | | A1 BARS | | J3 BARS | | | | | H1 BARS | | | H2 BARS | | | A2 BARS | | J4 BARS | | | | | H3 BARS | | | B1 BARS | | B2 BARS | | |
| | TS | BS | TX | TI | SIZE | SPA. | SIZE | SPA. | C1 | K2 HT=9' | K2 HT=10' | SIZE | SPA. | C5 | SIZE | SPA. | C6 | SIZE | SPA. | SIZE | SPA. | C4 | K3 HT=9' | K3 HT=10' | SIZE | SPA. | C7 | SIZE | SPA. | SIZE | SPA. | G1 |
| 1 FT | 12 | 9 | 8 | 8 | 5 | 7.5 | 4 | 6 | 38.1 | 28.0 | 28.0 | 4 | 16 | 73.0 | 4 | 16 | 26.0 | 4 | 7 | 6 | 7 | 68.1 | 113 | 125 | 5 | 7 | 38.0 | 5 | 12 | 5 | 12 | 12 |
| 2 FT | 12 | 9 | 8 | 8 | 5 | 7.5 | 5 | 8.5 | 38.1 | 28.0 | 32.0 | 4 | 15 | 73.0 | 4 | 15 | 25.0 | 4 | 6.5 | 6 | 6.5 | 64.9 | 113 | 125 | 5 | 6.5 | 37.5 | 5 | 12 | 5 | 12 | 12 |
| 4 FT | 8 | 9 | 9 | 8 | 4 | 6 | 5 | 6 | 40.8 | 24.0 | 28.0 | 5 | 17 | 75.5 | 5 | 17 | 23.5 | 4 | 7.5 | 5 | 6 | 57.8 | 113 | 125 | 5 | 7 | 37.0 | 5 | 12 | 5 | 11.5 | 12 |
| 6 FT | 8 | 9 | 10 | 8 | 4 | 7 | 5 | 6.5 | 55.0 | 24.0 | 28.0 | 5 | 17 | 39.5 | 5 | 17 | 23.0 | 4 | 7 | 5 | 6.5 | 51.9 | 113 | 125 | 5 | 6.5 | 36.0 | 5 | 12 | 5 | 11.5 | 12 |
| 8 FT | 8 | 9 | 10 | 8 | 4 | 7 | 5 | 6 | 49.0 | 28.0 | 28.0 | 5 | 16 | 37.0 | 5 | 16 | 23.5 | 4 | 6.5 | 5 | 6 | 49.3 | 113 | 125 | 5 | 6 | 35.5 | 5 | 12 | 5 | 10.5 | 0 |
| 10 FT | 8 | 10 | 10 | 8 | 4 | 6.5 | 6 | 7 | 49.0 | 28.0 | 28.0 | 5 | 15 | 36.0 | 5 | 15 | 24.0 | 4 | 6.5 | 5 | 6 | 49.1 | 114 | 126 | 5 | 6 | 35.5 | 5 | 12 | 5 | 10 | 0 |
| 12 FT | 9 | 10 | 10 | 8 | 4 | 6 | 5 | 6 | 46.1 | 29.0 | 29.0 | 5 | 16 | 35.5 | 5 | 16 | 23.5 | 5 | 9 | 6 | 7 | 50.3 | 114 | 126 | 5 | 6 | 35.0 | 5 | 12 | 5 | 9.5 | 0 |
| 14 FT | 9 | 11 | 10 | 8 | 5 | 9 | 5 | 6 | 44.6 | 29.0 | 29.0 | 5 | 15 | 35.0 | 5 | 15 | 23.5 | 5 | 9 | 6 | 7.5 | 50.6 | 115 | 127 | 5 | 6 | 35.0 | 5 | 12 | 5 | 8.5 | 0 |
| 16 FT | 9 | 11 | 10 | 8 | 5 | 9 | 5 | 6 | 41.5 | 29.0 | 29.0 | 5 | 14 | 34.0 | 5 | 14 | 23.5 | 5 | 8.5 | 5 | 6 | 44.0 | 115 | 127 | 5 | 6 | 35.0 | 5 | 12 | 5 | 9.5 | 0 |
| 18 FT | 10 | 12 | 10 | 8 | 5 | 8.5 | 5 | 6.5 | 42.0 | 30.0 | 30.0 | 5 | 15 | 34.0 | 5 | 15 | 23.5 | 5 | 8.5 | 5 | 6 | 44.3 | 116 | 128 | 5 | 6 | 35.0 | 5 | 12 | 5 | 8.5 | 0 |
| 20 FT | 11 | 13 | 10 | 8 | 5 | 8.5 | 5 | 6 | 42.4 | 31.0 | 31.0 | 5 | 14 | 33.5 | 5 | 14 | 22.5 | 5 | 8.5 | 5 | 6 | 44.6 | 117 | 129 | 6 | 8 | 38.0 | 5 | 12 | 5 | 8 | 0 |
| 22 FT | 11 | 13 | 10 | 8 | 5 | 7.5 | 5 | 6 | 42.1 | 31.0 | 31.0 | 5 | 14 | 33.5 | 5 | 14 | 23.5 | 5 | 7.5 | 6 | 7 | 47.3 | 117 | 129 | 6 | 7.5 | 38.0 | 5 | 12 | 5 | 8 | 0 |
| 24 FT | 12 | 14 | 10 | 8 | 5 | 7.5 | 5 | 6 | 42.5 | 32.0 | 32.0 | 5 | 13 | 33.5 | 5 | 13 | 22.5 | 5 | 8 | 6 | 7.5 | 47.6 | 118 | 130 | 6 | 7.5 | 38.0 | 5 | 12 | 5 | 8 | 0 |
| 26 FT | 13 | 15 | 10 | 8 | 5 | 7.5 | 6 | 7 | 45.8 | 33.0 | 37.0 | 5 | 12 | 33.0 | 5 | 12 | 21.5 | 5 | 8 | 6 | 7.5 | 47.9 | 119 | 131 | 6 | 7.5 | 38.0 | 5 | 12 | 5 | 8 | 0 |
| 28 FT | 13 | 16 | 11 | 8 | 5 | 7 | 5 | 6 | 42.9 | 33.0 | 33.0 | 5 | 12 | 32.5 | 5 | 12 | 22.0 | 5 | 8 | 5 | 6.5 | 45.3 | 120 | 132 | 6 | 7.5 | 38.0 | 5 | 12 | 5 | 7.5 | 0 |
| 30 FT | 14 | 16 | 11 | 8 | 5 | 7 | 6 | 7.5 | 46.1 | 34.0 | 34.0 | 5 | 12 | 32.0 | 5 | 12 | 21.0 | 5 | 7.5 | 5 | 6 | 45.0 | 120 | 132 | 6 | 7 | 38.0 | 5 | 12 | 5 | 7.5 | 0 |
| 32 FT | 14 | 17 | 12 | 8 | 5 | 7 | 5 | 6 | 43.4 | 34.0 | 34.0 | 5 | 12 | 32.0 | 5 | 12 | 21.5 | 5 | 7.5 | 5 | 6.5 | 45.4 | 121 | 133 | 6 | 7 | 38.0 | 5 | 12 | 5 | 7 | 0 |
| 34 FT | 15 | 17 | 12 | 8 | 5 | 6.5 | 6 | 8.5 | 52.6 | 35.0 | 35.0 | 6 | 16 | 40.5 | 6 | 16 | 29.5 | 5 | 6.5 | 5 | 6.5 | 45.1 | 121 | 133 | 6 | 7 | 38.0 | 5 | 12 | 5 | 7 | 0 |
| 36 FT | 15 | 18 | 13 | 8 | 5 | 6 | 6 | 8.5 | 52.9 | 35.0 | 35.0 | 6 | 16 | 40.0 | 6 | 16 | 29.5 | 5 | 7 | 5 | 6 | 45.5 | 122 | 134 | 6 | 7 | 38.0 | 5 | 12 | 5 | 6.5 | 0 |
| 38 FT | 16 | 19 | 13 | 8 | 5 | 6.5 | 6 | 8 | 53.1 | 36.0 | 36.0 | 6 | 16 | 39.5 | 6 | 16 | 29.0 | 5 | 7 | 5 | 6 | 45.9 | 123 | 135 | 6 | 7 | 38.0 | 5 | 12 | 5 | 6.5 | 0 |
| 40 FT | 17 | 19 | 13 | 8 | 5 | 6 | 6 | 7.5 | 53.4 | 37.0 | 37.0 | 5 | 12 | 35.0 | 5 | 12 | 25.0 | 5 | 6.5 | 5 | 6 | 45.8 | 123 | 135 | 6 | 6.5 | 38.0 | 5 | 12 | 5 | 6.5 | 0 |
| 42 FT | 17 | 20 | 14 | 8 | 5 | 6 | 6 | 8 | 53.8 | 37.0 | 37.0 | 6 | 16 | 39.0 | 6 | 16 | 29.0 | 5 | 6.5 | 5 | 6 | 46.1 | 124 | 136 | 6 | 6.5 | 38.5 | 5 | 12 | 5 | 6 | 0 |
| 44 FT | 17 | 20 | 14 | 8 | 6 | 8.5 | 6 | 7.5 | 53.6 | 37.0 | 37.0 | 6 | 15 | 39.0 | 6 | 15 | 29.0 | 5 | 6 | 5 | 6 | 46.1 | 124 | 136 | 6 | 6.5 | 38.5 | 5 | 12 | 5 | 6 | 0 |
| 46 FT | 18 | 21 | 14 | 8 | 6 | 8 | 6 | 7 | 53.9 | 38.0 | 38.0 | 6 | 17 | 38.5 | 6 | 17 | 29.0 | 5 | 6.5 | 5 | 6 | 46.5 | 125 | 137 | 6 | 6.5 | 38.0 | 5 | 12 | 5 | 6 | 0 |
| 48 FT | 18 | 22 | 15 | 8 | 6 | 8 | 6 | 7.5 | 54.3 | 38.0 | 42.0 | 6 | 16 | 38.5 | 6 | 16 | 29.0 | 5 | 6.5 | 6 | 8 | 49.9 | 126 | 138 | 6 | 6.5 | 38.5 | 5 | 12 | 5 | 6 | 0 |
| 50 FT | 18 | 22 | 15 | 8 | 6 | 7.5 | 6 | 7.5 | 54.3 | 38.0 | 42.0 | 6 | 15 | 38.5 | 6 | 15 | 29.0 | 5 | 6 | 6 | 8 | 49.9 | 126 | 138 | 6 | 6 | 38.5 | 5 | 12 | 6 | 8 | 0 |

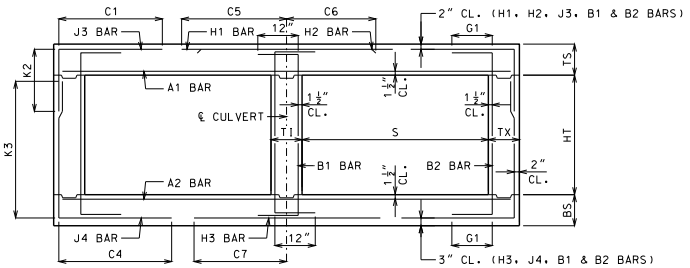


BAR DIMENSIONS DIAGRAM
SYMMETRICAL ABOUT ℄ CULVERT.

GENERAL NOTES:

IF DESIGN FILL IS BETWEEN TABULATED DESIGN FILLS, USE THE NEXT GREATER TABULATED DESIGN FILL, EXCEPT FOR DESIGN FILLS BETWEEN 2 FEET AND 4 FEET. FOR DESIGN FILLS BETWEEN 2 FEET AND 4 FEET USE THE GREATER MEMBER THICKNESS, AREA OF REINFORCEMENT AND BAR DIMENSIONS FROM THE 2 FEET AND 4 FEET TABULATED DESIGN FILLS. AREA OF REINFORCEMENT EQUALS BAR AREA PER FOOT SPACING.

SPECIAL DESIGNS ARE REQUIRED WHEN THE DESIGN FILL IS LESS THAN 1 FOOT OR GREATER THAN 50 FEET.

DIMENSIONS ARE IN INCHES UNLESS OTHERWISE SPECIFIED.

DESIGN FILLS ARE MEASURED FROM THE TOP OF TOP SLAB TO THE TOP OF EARTH FILL OR ROADWAY.

CULVERTS MEET STRENGTH AND SERVICEABILITY REQUIREMENTS FOR THE DESIGN VEHICULAR LIVE LOAD HL-93 MINUS THE LANE LOAD.


MISSOURI HIGHWAYS AND TRANSPORTATION COMMISSION
105 WEST CAPITOL
JEFFERSON CITY, MO 65102
1-888-ASK-MODOT (1-888-275-6636)


STATE OF MISSOURI
DENNIS W. HECKMANN
NUMBER PE-27141
PROFESSIONAL ENGINEER
THIS SHEET HAS BEEN SIGNED, SEALED AND DATED ELECTRONICALLY.

# CONCRETE DOUBLE BOX CULVERT

MEMBER THICKNESS
BAR SIZE, SPACING & DIMENSIONS

SPAN (S): 7 FEET
HEIGHT (HT): 9 THRU 10 FEET

DATE EFFECTIVE: 10/01/2011
DATE PREPARED: 9/8/2011

703.47

SHEET NO.
9 OF 27

IF A SEAL IS PRESENT ON THIS SHEET IT HAS BEEN ELECTRONICALLY SEALED AND DATED.

SPAN (S) = 8 FT  HEIGHT (HT) = 4 FT OR 5 FT OR 6 FT

| DESIGN FILL | MEMBER THICKNESS | | | | TOP SLAB BARS | | | | | | | | | | | | BOTTOM SLAB BARS | | | | | | | | | | | | WALL BARS | | | | |
|---|---|---|---|---|---|---|---|---|---|---|---|---|---|---|---|---|---|---|---|---|---|---|---|---|---|---|---|---|---|---|---|---|---|
| | | | | | A1 BARS | | J3 BARS | | | | | | H1 BARS | | | H2 BARS | | | A2 BARS | | J4 BARS | | | | | H3 BARS | | | B1 BARS | | B2 BARS | | |
| | | | | | | | | | | K2 | | | | | | | | | | | | K3 | | | | | | | | | |
| | TS | BS | TX | TI | SIZE | SPA. | SIZE | SPA. | C1 | HT=4′ | HT=5′ | HT=6′ | SIZE | SPA. | C5 | SIZE | SPA. | C6 | SIZE | SPA. | SIZE | SPA. | C4 | HT=4′ | HT=5′ | HT=6′ | SIZE | SPA. | C7 | SIZE | SPA. | SIZE | SPA. | G1 |
| 1 FT | 12 | 9 | 8 | 8 | 5 | 7 | 4 | 8.5 | 41.8 | 28.0 | 28.0 | 28.0 | 4 | 12 | 81.5 | 4 | 12 | 26.5 | 4 | 7 | 4 | 8 | 43.0 | 53 | 65 | 77 | 5 | 6.5 | 41.0 | 5 | 12 | 5 | 12 | 12 |
| 2 FT | 13 | 9 | 8 | 8 | 5 | 7.5 | 4 | 7.5 | 41.8 | 29.0 | 29.0 | 29.0 | 4 | 13 | 81.5 | 4 | 13 | 26.5 | 4 | 6.5 | 4 | 7 | 39.1 | 53 | 65 | 77 | 5 | 6 | 40.5 | 5 | 12 | 5 | 12 | 12 |
| 4 FT | 8 | 8 | 8 | 8 | 4 | 6 | 5 | 6.5 | 36.4 | 24.0 | 24.0 | 24.0 | 5 | 15 | 51.0 | 5 | 15 | 26.5 | 4 | 6 | 4 | 6 | 35.3 | 52 | 64 | 76 | 6 | 6.5 | 42.5 | 5 | 9.5 | 5 | 12 | 12 |
| 6 FT | 8 | 9 | 8 | 8 | 4 | 6 | 5 | 6.5 | 34.3 | 24.0 | 24.0 | 24.0 | 5 | 15 | 42.5 | 5 | 15 | 26.0 | 4 | 6 | 4 | 7.5 | 33.1 | 53 | 65 | 77 | 6 | 7 | 42.0 | 5 | 12 | 5 | 12 | 12 |
| 8 FT | 8 | 9 | 8 | 8 | 4 | 6 | 5 | 6 | 33.1 | 24.0 | 24.0 | 24.0 | 5 | 13 | 40.5 | 5 | 13 | 25.5 | 5 | 8.5 | 4 | 7 | 31.6 | 53 | 65 | 77 | 6 | 6.5 | 41.5 | 5 | 12 | 5 | 12 | 0 |
| 10 FT | 9 | 10 | 8 | 8 | 5 | 8.5 | 4 | 6 | 31.9 | 25.0 | 25.0 | 25.0 | 5 | 14 | 39.5 | 5 | 14 | 25.5 | 5 | 8 | 4 | 8 | 30.4 | 54 | 66 | 78 | 6 | 7 | 41.5 | 5 | 12 | 5 | 12 | 0 |
| 12 FT | 10 | 11 | 8 | 8 | 5 | 8 | 4 | 6 | 30.6 | 26.0 | 26.0 | 26.0 | 5 | 14 | 39.0 | 5 | 14 | 25.0 | 5 | 8 | 4 | 8 | 29.3 | 55 | 67 | 79 | 6 | 7 | 41.5 | 5 | 12 | 5 | 12 | 0 |
| 14 FT | 11 | 12 | 8 | 8 | 5 | 8 | 4 | 6 | 29.8 | 27.0 | 27.0 | 27.0 | 5 | 14 | 38.5 | 5 | 14 | 25.0 | 5 | 7.5 | 4 | 7.5 | 28.6 | 56 | 68 | 80 | 6 | 7 | 41.5 | 5 | 12 | 5 | 12 | 0 |
| 16 FT | 11 | 13 | 8 | 8 | 5 | 7.5 | 5 | 8.5 | 29.6 | 27.0 | 27.0 | 27.0 | 5 | 12 | 38.5 | 5 | 12 | 25.0 | 5 | 7.5 | 4 | 8 | 28.0 | 57 | 69 | 81 | 6 | 7 | 41.5 | 5 | 12 | 5 | 12 | 0 |
| 18 FT | 12 | 13 | 8 | 8 | 5 | 7.5 | 4 | 6 | 27.5 | 28.0 | 28.0 | 28.0 | 5 | 13 | 37.5 | 5 | 13 | 25.0 | 5 | 7 | 4 | 7.5 | 26.8 | 57 | 69 | 81 | 6 | 7 | 41.0 | 5 | 12 | 5 | 12 | 0 |
| 20 FT | 12 | 14 | 8 | 8 | 5 | 7 | 5 | 8.5 | 27.8 | 28.0 | 28.0 | 28.0 | 5 | 12 | 37.5 | 5 | 12 | 25.0 | 5 | 7 | 4 | 7.5 | 26.4 | 58 | 70 | 82 | 6 | 7 | 41.5 | 5 | 12 | 5 | 12 | 0 |
| 22 FT | 13 | 15 | 8 | 8 | 5 | 6.5 | 6 | 8.5 | 27.4 | 29.0 | 29.0 | 29.0 | 5 | 12 | 37.5 | 5 | 12 | 25.0 | 5 | 7 | 4 | 7 | 26.4 | 59 | 71 | 83 | 6 | 7 | 41.5 | 5 | 12 | 5 | 12 | 0 |
| 24 FT | 14 | 16 | 8 | 8 | 5 | 6.5 | 5 | 8.5 | 27.3 | 30.0 | 30.0 | 30.0 | 5 | 12 | 37.5 | 5 | 12 | 24.5 | 5 | 7 | 4 | 6.5 | 26.5 | 60 | 72 | 84 | 6 | 7 | 41.5 | 5 | 12 | 5 | 12 | 0 |
| 26 FT | 15 | 16 | 8 | 8 | 5 | 6.5 | 5 | 8 | 31.9 | 31.0 | 31.0 | 31.0 | 6 | 16 | 46.5 | 6 | 16 | 33.0 | 5 | 6.5 | 4 | 6.5 | 26.6 | 60 | 72 | 84 | 6 | 7 | 41.0 | 5 | 12 | 5 | 12 | 0 |
| 28 FT | 16 | 17 | 8 | 8 | 5 | 6 | 5 | 7 | 31.8 | 32.0 | 32.0 | 32.0 | 6 | 15 | 46.0 | 6 | 15 | 32.0 | 5 | 6.5 | 4 | 6 | 26.8 | 61 | 73 | 85 | 6 | 6.5 | 41.0 | 5 | 12 | 5 | 12 | 0 |
| 30 FT | 16 | 18 | 8 | 8 | 5 | 6 | 5 | 7 | 32.0 | 32.0 | 32.0 | 36.0 | 6 | 15 | 46.0 | 6 | 15 | 33.0 | 5 | 6.5 | 5 | 6.5 | 26.6 | 62 | 74 | 86 | 6 | 6.5 | 41.0 | 5 | 12 | 5 | 12 | 0 |
| 32 FT | 17 | 19 | 8 | 8 | 5 | 6 | 5 | 6.5 | 31.9 | 37.0 | 37.0 | 37.0 | 6 | 14 | 45.5 | 6 | 14 | 32.0 | 5 | 6.5 | 5 | 6.5 | 26.8 | 63 | 75 | 87 | 6 | 6.5 | 41.0 | 5 | 12 | 5 | 12 | 0 |
| 34 FT | 18 | 19 | 8 | 8 | 6 | 8.5 | 5 | 6.5 | 31.8 | 38.0 | 38.0 | 38.0 | 6 | 13 | 45.5 | 6 | 13 | 31.0 | 5 | 6 | 5 | 6.5 | 26.9 | 63 | 75 | 87 | 6 | 6 | 41.0 | 5 | 12 | 5 | 11 | 0 |
| 36 FT | 18 | 20 | 8 | 8 | 6 | 8 | 5 | 6.5 | 31.9 | 38.0 | 38.0 | 38.0 | 6 | 13 | 45.5 | 6 | 13 | 32.0 | 5 | 6 | 5 | 6 | 26.9 | 64 | 76 | 88 | 6 | 6 | 41.0 | 5 | 12 | 5 | 10 | 0 |
| 38 FT | 19 | 21 | 8 | 8 | 6 | 8 | 5 | 6 | 32.0 | 39.0 | 39.0 | 39.0 | 6 | 13 | 45.0 | 6 | 13 | 31.0 | 5 | 6 | 6 | 7.5 | 30.1 | 65 | 77 | 89 | 6 | 6 | 41.0 | 5 | 12 | 5 | 9.5 | 0 |
| 40 FT | 20 | 22 | 8 | 8 | 6 | 7.5 | 6 | 7.5 | 36.0 | 44.0 | 44.0 | 44.0 | 6 | 13 | 44.5 | 6 | 13 | 30.5 | 5 | 6 | 6 | 7 | 30.4 | 66 | 78 | 90 | 6 | 6 | 41.0 | 5 | 12 | 5 | 9.5 | 0 |
| 42 FT | 20 | 22 | 8 | 8 | 6 | 7.5 | 6 | 7.5 | 36.0 | 44.0 | 44.0 | 44.0 | 6 | 12 | 44.5 | 6 | 12 | 30.5 | 6 | 8.5 | 6 | 7 | 30.3 | 66 | 78 | 90 | 6 | 6 | 41.0 | 5 | 12 | 5 | 9.5 | 0 |
| 44 FT | 21 | 23 | 8 | 8 | 6 | 7.5 | 6 | 7 | 36.0 | 45.0 | 45.0 | 45.0 | 6 | 12 | 43.5 | 6 | 12 | 30.0 | 6 | 8.5 | 6 | 6.5 | 30.5 | 67 | 79 | 91 | 6 | 6 | 41.0 | 5 | 12 | 5 | 9.5 | 0 |
| 46 FT | 21 | 23 | 8 | 8 | 6 | 7 | 6 | 7 | 36.0 | 45.0 | 45.0 | 45.0 | 6 | 12 | 43.5 | 6 | 12 | 30.0 | 6 | 8 | 6 | 6.5 | 30.5 | 67 | 79 | 91 | 7 | 7.5 | 44.0 | 5 | 12 | 5 | 9.5 | 0 |
| 48 FT | 22 | 24 | 8 | 8 | 6 | 7 | 6 | 6.5 | 36.1 | 46.0 | 46.0 | 46.0 | 6 | 12 | 43.0 | 6 | 12 | 30.0 | 6 | 8 | 6 | 6 | 30.8 | 68 | 80 | 92 | 7 | 7.5 | 44.0 | 5 | 12 | 5 | 9 | 0 |
| 50 FT | 22 | 24 | 8 | 8 | 6 | 6.5 | 6 | 6.5 | 36.1 | 46.0 | 46.0 | 46.0 | 6 | 12 | 43.0 | 6 | 12 | 30.0 | 6 | 7.5 | 6 | 6 | 30.8 | 68 | 80 | 92 | 7 | 7.5 | 44.0 | 5 | 12 | 5 | 8.5 | 0 |

SPAN (S) = 8 FT  HEIGHT (HT) = 7 FT OR 8 FT OR 9 FT

| DESIGN FILL | MEMBER THICKNESS | | | | TOP SLAB BARS | | | | | | | | | | | | BOTTOM SLAB BARS | | | | | | | | | | | | WALL BARS | | | | |
|---|---|---|---|---|---|---|---|---|---|---|---|---|---|---|---|---|---|---|---|---|---|---|---|---|---|---|---|---|---|---|---|---|---|
| | | | | | A1 BARS | | J3 BARS | | | | | | H1 BARS | | | H2 BARS | | | A2 BARS | | J4 BARS | | | | | H3 BARS | | | B1 BARS | | B2 BARS | | |
| | | | | | | | | | | K2 | | | | | | | | | | | | K3 | | | | | | | | | |
| | TS | BS | TX | TI | SIZE | SPA. | SIZE | SPA. | C1 | HT=7′ | HT=8′ | HT=9′ | SIZE | SPA. | C5 | SIZE | SPA. | C6 | SIZE | SPA. | SIZE | SPA. | C4 | HT=7′ | HT=8′ | HT=9′ | SIZE | SPA. | C7 | SIZE | SPA. | SIZE | SPA. | G1 |
| 1 FT | 12 | 9 | 8 | 8 | 5 | 7 | 4 | 6.5 | 41.8 | 28.0 | 28.0 | 28.0 | 4 | 12 | 81.5 | 4 | 12 | 27.5 | 4 | 6 | 5 | 6.5 | 61.6 | 89 | 101 | 113 | 5 | 6 | 41.0 | 5 | 12 | 5 | 12 | 12 |
| 2 FT | 13 | 10 | 8 | 8 | 5 | 7 | 4 | 6.5 | 41.8 | 29.0 | 29.0 | 29.0 | 4 | 13 | 81.5 | 4 | 13 | 27.0 | 4 | 6.5 | 4 | 6 | 58.3 | 90 | 102 | 114 | 5 | 6.5 | 40.5 | 5 | 12 | 5 | 12 | 12 |
| 4 FT | 8 | 9 | 8 | 8 | 4 | 6 | 6 | 7.5 | 43.8 | 24.0 | 24.0 | 28.0 | 5 | 15 | 83.5 | 5 | 15 | 27.0 | 4 | 6 | 5 | 6 | 52.3 | 89 | 101 | 113 | 5 | 6 | 40.0 | 5 | 11 | 5 | 12 | 12 |
| 6 FT | 8 | 10 | 8 | 8 | 4 | 6 | 6 | 7.5 | 51.4 | 24.0 | 24.0 | 28.0 | 5 | 15 | 43.0 | 5 | 15 | 26.0 | 4 | 6.5 | 5 | 6 | 49.0 | 90 | 102 | 114 | 5 | 6.5 | 39.5 | 5 | 12 | 5 | 12 | 12 |
| 8 FT | 8 | 11 | 8 | 8 | 4 | 6 | 6 | 7.5 | 46.6 | 24.0 | 24.0 | 28.0 | 5 | 13 | 40.5 | 5 | 13 | 25.5 | 4 | 6.5 | 5 | 6.5 | 46.3 | 91 | 103 | 115 | 5 | 6 | 39.0 | 5 | 12 | 5 | 12 | 0 |
| 10 FT | 9 | 11 | 8 | 8 | 5 | 8.5 | 6 | 7 | 45.3 | 25.0 | 25.0 | 29.0 | 5 | 14 | 39.5 | 5 | 14 | 25.5 | 5 | 8.5 | 5 | 6 | 43.6 | 91 | 103 | 115 | 5 | 6 | 38.5 | 5 | 12 | 5 | 11 | 0 |
| 12 FT | 10 | 12 | 8 | 8 | 5 | 8 | 6 | 7 | 44.4 | 26.0 | 30.0 | 30.0 | 5 | 14 | 39.0 | 5 | 14 | 25.0 | 5 | 8.5 | 5 | 6 | 42.5 | 92 | 104 | 116 | 5 | 6 | 38.5 | 5 | 12 | 5 | 10 | 0 |
| 14 FT | 11 | 12 | 8 | 8 | 5 | 8 | 6 | 7 | 43.5 | 27.0 | 31.0 | 35.0 | 5 | 14 | 38.5 | 5 | 14 | 25.0 | 5 | 7.5 | 6 | 7 | 44.4 | 92 | 104 | 116 | 6 | 7 | 41.5 | 5 | 12 | 5 | 9.5 | 0 |
| 16 FT | 11 | 13 | 8 | 8 | 5 | 7.5 | 6 | 6.5 | 42.9 | 27.0 | 31.0 | 35.0 | 5 | 12 | 38.0 | 5 | 12 | 25.0 | 5 | 7.5 | 6 | 7 | 44.0 | 93 | 105 | 117 | 6 | 7.5 | 41.5 | 5 | 12 | 5 | 9.5 | 0 |
| 18 FT | 12 | 13 | 8 | 8 | 5 | 7.5 | 5 | 6 | 37.1 | 28.0 | 32.0 | 32.0 | 5 | 13 | 37.5 | 5 | 13 | 25.0 | 5 | 7 | 6 | 7.5 | 41.1 | 93 | 105 | 117 | 6 | 7 | 41.0 | 5 | 12 | 5 | 9.5 | 0 |
| 20 FT | 12 | 14 | 8 | 8 | 5 | 7 | 6 | 7 | 39.9 | 32.0 | 32.0 | 36.0 | 5 | 12 | 37.5 | 5 | 12 | 25.0 | 5 | 7 | 6 | 7.5 | 41.1 | 94 | 106 | 118 | 6 | 7 | 41.0 | 5 | 12 | 5 | 9.5 | 0 |
| 22 FT | 13 | 15 | 8 | 8 | 5 | 6.5 | 6 | 7 | 39.9 | 33.0 | 33.0 | 37.0 | 5 | 12 | 37.0 | 5 | 12 | 25.0 | 5 | 7 | 6 | 7.5 | 41.3 | 95 | 107 | 119 | 6 | 7 | 41.0 | 5 | 12 | 5 | 9.5 | 0 |
| 24 FT | 14 | 16 | 8 | 8 | 5 | 6.5 | 6 | 7 | 40.0 | 34.0 | 34.0 | 38.0 | 5 | 12 | 37.0 | 5 | 12 | 24.0 | 5 | 7 | 6 | 7 | 41.4 | 96 | 108 | 120 | 6 | 7 | 41.0 | 5 | 12 | 5 | 9 | 0 |
| 26 FT | 15 | 16 | 9 | 8 | 5 | 6.5 | 5 | 6 | 42.4 | 35.0 | 35.0 | 35.0 | 6 | 16 | 45.5 | 6 | 16 | 32.0 | 5 | 6.5 | 5 | 6 | 38.5 | 96 | 108 | 120 | 6 | 7 | 41.0 | 5 | 12 | 5 | 8.5 | 0 |
| 28 FT | 15 | 17 | 10 | 8 | 5 | 6 | 5 | 6.5 | 42.9 | 31.0 | 35.0 | 35.0 | 6 | 16 | 45.5 | 6 | 16 | 33.0 | 5 | 6.5 | 5 | 7.5 | 38.8 | 97 | 109 | 121 | 6 | 6.5 | 41.5 | 5 | 12 | 5 | 8 | 0 |
| 30 FT | 16 | 18 | 11 | 8 | 5 | 6 | 5 | 6.5 | 43.6 | 32.0 | 36.0 | 36.0 | 6 | 15 | 44.5 | 6 | 15 | 31.5 | 5 | 6.5 | 5 | 7 | 39.1 | 98 | 110 | 122 | 6 | 6.5 | 41.5 | 5 | 12 | 5 | 8.5 | 0 |
| 32 FT | 17 | 19 | 11 | 8 | 5 | 6 | 5 | 6.5 | 43.6 | 33.0 | 37.0 | 37.0 | 6 | 14 | 44.0 | 6 | 14 | 31.0 | 5 | 6.5 | 5 | 7 | 39.4 | 99 | 111 | 123 | 6 | 6 | 41.5 | 5 | 12 | 5 | 7.5 | 0 |
| 34 FT | 17 | 20 | 11 | 8 | 6 | 8 | 5 | 6 | 43.8 | 37.0 | 37.0 | 37.0 | 6 | 14 | 44.0 | 6 | 14 | 31.5 | 5 | 6.5 | 5 | 7 | 39.5 | 100 | 112 | 124 | 6 | 6 | 41.5 | 5 | 12 | 5 | 7.5 | 0 |
| 36 FT | 18 | 20 | 12 | 8 | 6 | 8 | 5 | 6.5 | 44.3 | 38.0 | 38.0 | 38.0 | 6 | 13 | 43.5 | 6 | 13 | 30.5 | 5 | 6 | 5 | 6.5 | 39.6 | 100 | 112 | 124 | 6 | 6 | 41.5 | 5 | 12 | 5 | 7.5 | 0 |
| 38 FT | 18 | 21 | 12 | 8 | 6 | 7.5 | 5 | 6 | 44.4 | 38.0 | 38.0 | 38.0 | 6 | 13 | 43.5 | 6 | 13 | 31.0 | 5 | 6 | 5 | 6.5 | 39.9 | 101 | 113 | 125 | 6 | 6 | 41.5 | 5 | 12 | 5 | 7 | 0 |
| 40 FT | 19 | 22 | 12 | 8 | 6 | 7.5 | 6 | 8.5 | 48.4 | 39.0 | 39.0 | 39.0 | 6 | 13 | 42.5 | 6 | 13 | 30.0 | 5 | 6 | 5 | 6.5 | 40.1 | 102 | 114 | 126 | 6 | 6 | 41.5 | 5 | 12 | 5 | 7 | 0 |
| 42 FT | 19 | 22 | 13 | 8 | 6 | 7 | 5 | 6 | 45.0 | 39.0 | 39.0 | 39.0 | 6 | 13 | 42.5 | 6 | 13 | 30.5 | 6 | 8 | 5 | 6.5 | 40.3 | 102 | 114 | 126 | 7 | 7.5 | 44.5 | 5 | 12 | 5 | 7 | 0 |
| 44 FT | 20 | 23 | 13 | 8 | 6 | 7 | 6 | 8.5 | 49.1 | 40.0 | 40.0 | 40.0 | 6 | 13 | 42.0 | 6 | 13 | 30.0 | 6 | 8 | 5 | 6 | 40.5 | 103 | 115 | 127 | 7 | 7.5 | 44.5 | 5 | 12 | 5 | 7 | 0 |
| 46 FT | 20 | 24 | 13 | 8 | 6 | 6.5 | 6 | 8 | 49.3 | 40.0 | 40.0 | 40.0 | 6 | 12 | 42.0 | 6 | 12 | 30.0 | 6 | 8 | 5 | 6 | 40.6 | 104 | 116 | 128 | 7 | 7.5 | 44.5 | 5 | 12 | 5 | 6.5 | 0 |
| 48 FT | 21 | 24 | 13 | 8 | 6 | 7 | 6 | 7.5 | 49.1 | 41.0 | 41.0 | 41.0 | 6 | 13 | 41.5 | 6 | 13 | 29.5 | 6 | 8 | 5 | 6 | 40.8 | 104 | 116 | 128 | 7 | 7.5 | 44.5 | 5 | 12 | 5 | 6.5 | 0 |
| 50 FT | 21 | 25 | 14 | 8 | 6 | 6.5 | 6 | 8 | 49.9 | 41.0 | 41.0 | 41.0 | 6 | 13 | 41.5 | 6 | 13 | 29.5 | 6 | 8 | 5 | 6.5 | 41.1 | 105 | 117 | 129 | 7 | 7.5 | 44.5 | 5 | 12 | 5 | 6.5 | 0 |

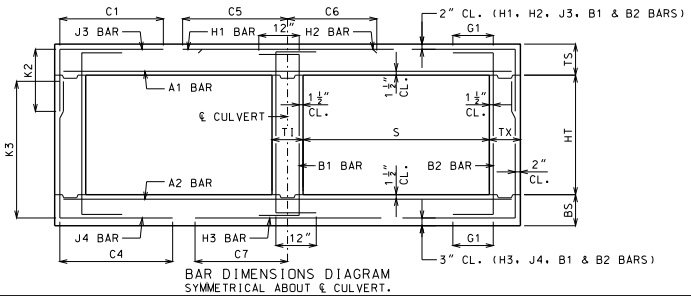


BAR DIMENSIONS DIAGRAM
SYMMETRICAL ABOUT ℄ CULVERT.

GENERAL NOTES:

IF DESIGN FILL IS BETWEEN TABULATED DESIGN FILLS, USE THE NEXT GREATER TABULATED DESIGN FILL, EXCEPT FOR DESIGN FILLS BETWEEN 2 FEET AND 4 FEET. FOR DESIGN FILLS BETWEEN 2 FEET AND 4 FEET USE THE GREATER MEMBER THICKNESS, AREA OF REINFORCEMENT AND BAR DIMENSIONS FROM THE 2 FEET AND 4 FEET TABULATED DESIGN FILLS. AREA OF REINFORCEMENT EQUALS BAR AREA PER FOOT SPACING.

SPECIAL DESIGNS ARE REQUIRED WHEN THE DESIGN FILL IS LESS THAN 1 FOOT OR GREATER THAN 50 FEET.

DIMENSIONS ARE IN INCHES UNLESS OTHERWISE SPECIFIED.

DESIGN FILLS ARE MEASURED FROM THE TOP OF TOP SLAB TO THE TOP OF EARTH FILL OR ROADWAY.

CULVERTS MEET STRENGTH AND SERVICEABILITY REQUIREMENTS FOR THE DESIGN VEHICULAR LIVE LOAD HL-93 MINUS THE LANE LOAD.


MISSOURI HIGHWAYS AND TRANSPORTATION COMMISSION
105 WEST CAPITOL
JEFFERSON CITY, MO 65102
1-888-ASK-MODOT (1-888-275-6636)


STATE OF MISSOURI
DENNIS W. HECKMANN
NUMBER PE-27141
PROFESSIONAL ENGINEER
THIS SHEET HAS BEEN SIGNED, SEALED AND DATED ELECTRONICALLY.

# CONCRETE DOUBLE BOX CULVERT

MEMBER THICKNESS
BAR SIZE, SPACING & DIMENSIONS

SPAN (S): 8 FEET
HEIGHT (HT): 4 THRU 9 FEET

DATE EFFECTIVE: 10/01/2011
DATE PREPARED: 9/8/2011

703.47

SHEET NO.
10 OF 27

IF A SEAL IS PRESENT ON THIS SHEET IT HAS BEEN ELECTRONICALLY SEALED AND DATED.

SPAN (S) = 8 FT  HEIGHT (HT) = 10 FT OR 11 FT

| DESIGN FILL | MEMBER THICKNESS | | | | TOP SLAB BARS | | | | | | | H1 BARS | | | H2 BARS | | | BOTTOM SLAB BARS | | | | | | | | | H3 BARS | | | WALL BARS | | | | |
|---|---|---|---|---|---|---|---|---|---|---|---|---|---|---|---|---|---|---|---|---|---|---|---|---|---|---|---|---|---|---|---|---|---|
| | | | | | A1 BARS | | J3 BARS | | | K2 | | | | | | | | A2 BARS | | J4 BARS | | | K3 | | | | | | B1 BARS | | B2 BARS | | |
| | TS | BS | TX | TI | SIZE | SPA. | SIZE | SPA. | C1 | HT=10' | HT=11' | SIZE | SPA. | C5 | SIZE | SPA. | C6 | SIZE | SPA. | SIZE | SPA. | C4 | HT=10' | HT=11' | SIZE | SPA. | C7 | SIZE | SPA. | SIZE | SPA. | G1 |
| 1 FT | 12 | 9 | 8 | 9 | 5 | 7 | 5 | 7.5 | 41.9 | 32.0 | 32.0 | 4 | 12 | 81.5 | 4 | 12 | 27.5 | 5 | 9 | 6 | 6 | 73.9 | 125 | 137 | 5 | 6 | 41.5 | 5 | 12 | 5 | 10.5 | 12 |
| 2 FT | 13 | 10 | 9 | 9 | 5 | 7 | 5 | 8 | 42.5 | 29.0 | 33.0 | 4 | 13 | 82.0 | 4 | 13 | 27.0 | 4 | 6 | 5 | 6 | 66.8 | 126 | 138 | 5 | 6.5 | 41.0 | 5 | 12 | 5 | 11 | 12 |
| 4 FT | 8 | 11 | 9 | 9 | 4 | 6 | 6 | 7 | 44.5 | 24.0 | 28.0 | 5 | 16 | 84.0 | 5 | 16 | 27.0 | 4 | 7 | 5 | 6 | 66.0 | 127 | 139 | 5 | 7.5 | 41.0 | 5 | 10.5 | 5 | 9.5 | 12 |
| 6 FT | 8 | 11 | 9 | 9 | 4 | 6 | 6 | 7 | 61.5 | 28.0 | 32.0 | 5 | 15 | 43.0 | 5 | 15 | 26.0 | 4 | 6.5 | 6 | 7 | 64.5 | 127 | 139 | 5 | 7 | 40.0 | 5 | 11.5 | 5 | 9 | 12 |
| 8 FT | 8 | 11 | 9 | 9 | 4 | 6 | 6 | 7 | 55.6 | 28.0 | 32.0 | 5 | 14 | 40.5 | 5 | 14 | 25.5 | 4 | 6 | 6 | 6.5 | 60.4 | 127 | 139 | 5 | 6 | 39.5 | 5 | 11.5 | 5 | 8.5 | 0 |
| 10 FT | 9 | 11 | 9 | 9 | 5 | 8.5 | 6 | 7.5 | 54.9 | 29.0 | 33.0 | 5 | 14 | 39.5 | 5 | 14 | 25.5 | 5 | 8.5 | 6 | 6 | 57.5 | 127 | 139 | 5 | 6 | 39.0 | 5 | 12 | 5 | 8.5 | 0 |
| 12 FT | 10 | 11 | 9 | 9 | 5 | 8 | 5 | 6 | 51.1 | 30.0 | 30.0 | 5 | 14 | 39.0 | 5 | 14 | 25.5 | 5 | 7.5 | 6 | 6 | 55.3 | 127 | 139 | 6 | 7 | 41.5 | 5 | 12 | 5 | 8.5 | 0 |
| 14 FT | 10 | 12 | 9 | 9 | 5 | 8 | 6 | 6.5 | 52.0 | 30.0 | 34.0 | 5 | 13 | 38.5 | 5 | 13 | 25.5 | 5 | 7.5 | 6 | 6 | 54.8 | 128 | 140 | 6 | 7 | 41.5 | 5 | 12 | 5 | 8.5 | 0 |
| 16 FT | 11 | 13 | 10 | 9 | 5 | 7.5 | 5 | 6 | 48.6 | 31.0 | 31.0 | 5 | 13 | 38.0 | 5 | 13 | 25.5 | 5 | 7.5 | 6 | 6.5 | 54.1 | 129 | 141 | 6 | 7.5 | 41.5 | 5 | 12 | 5 | 8 | 0 |
| 18 FT | 11 | 13 | 10 | 9 | 5 | 7.5 | 5 | 6 | 45.1 | 31.0 | 31.0 | 5 | 12 | 37.0 | 5 | 12 | 25.0 | 5 | 7 | 6 | 6.5 | 50.4 | 129 | 141 | 6 | 7 | 41.5 | 5 | 12 | 5 | 8 | 0 |
| 20 FT | 12 | 14 | 10 | 9 | 5 | 7 | 6 | 7.5 | 48.4 | 32.0 | 36.0 | 5 | 13 | 37.0 | 5 | 13 | 25.0 | 5 | 7 | 6 | 6.5 | 50.5 | 130 | 142 | 6 | 7.5 | 41.5 | 5 | 12 | 5 | 8 | 0 |
| 22 FT | 13 | 15 | 10 | 9 | 5 | 7 | 6 | 7 | 48.5 | 33.0 | 37.0 | 5 | 12 | 37.0 | 5 | 12 | 24.5 | 5 | 7 | 6 | 6.5 | 50.6 | 131 | 143 | 6 | 7 | 41.5 | 5 | 12 | 5 | 8 | 0 |
| 24 FT | 13 | 16 | 11 | 9 | 5 | 6.5 | 6 | 8 | 48.5 | 33.0 | 33.0 | 5 | 12 | 36.5 | 5 | 12 | 25.0 | 5 | 7 | 5 | 6 | 47.8 | 132 | 144 | 6 | 7 | 41.5 | 5 | 12 | 5 | 7.5 | 0 |
| 26 FT | 14 | 16 | 12 | 9 | 5 | 6.5 | 5 | 6 | 46.0 | 34.0 | 34.0 | 5 | 12 | 36.0 | 5 | 12 | 24.5 | 5 | 6 | 5 | 6 | 47.5 | 132 | 144 | 6 | 7 | 41.5 | 5 | 12 | 5 | 7 | 0 |
| 28 FT | 15 | 17 | 12 | 9 | 5 | 6.5 | 6 | 8 | 55.3 | 35.0 | 35.0 | 6 | 16 | 44.5 | 6 | 16 | 32.5 | 5 | 6.5 | 5 | 6 | 47.8 | 133 | 145 | 6 | 6.5 | 41.5 | 5 | 12 | 5 | 7 | 0 |
| 30 FT | 16 | 18 | 13 | 9 | 5 | 6.5 | 6 | 8 | 55.8 | 36.0 | 36.0 | 6 | 15 | 44.0 | 6 | 15 | 31.5 | 5 | 6.5 | 5 | 6 | 48.0 | 134 | 146 | 6 | 6.5 | 41.5 | 5 | 12 | 5 | 6.5 | 0 |
| 32 FT | 16 | 19 | 13 | 9 | 5 | 6 | 6 | 7.5 | 55.8 | 36.0 | 36.0 | 6 | 15 | 44.0 | 6 | 15 | 32.0 | 5 | 6.5 | 5 | 6 | 48.3 | 135 | 147 | 6 | 6 | 41.5 | 5 | 12 | 5 | 6.5 | 0 |
| 34 FT | 17 | 20 | 13 | 9 | 5 | 6 | 6 | 7 | 56.0 | 37.0 | 37.0 | 6 | 14 | 43.5 | 6 | 14 | 31.0 | 5 | 6.5 | 5 | 6 | 48.5 | 136 | 148 | 6 | 6.5 | 41.5 | 5 | 12 | 5 | 6.5 | 0 |
| 36 FT | 17 | 20 | 14 | 9 | 6 | 8 | 6 | 7.5 | 56.1 | 37.0 | 37.0 | 6 | 14 | 43.0 | 6 | 14 | 31.5 | 5 | 6 | 5 | 6 | 48.6 | 136 | 148 | 6 | 6 | 41.5 | 5 | 12 | 5 | 6 | 0 |
| 38 FT | 18 | 21 | 14 | 9 | 6 | 8 | 6 | 7 | 56.4 | 38.0 | 38.0 | 6 | 13 | 42.5 | 6 | 13 | 30.5 | 5 | 6 | 5 | 6 | 48.9 | 137 | 149 | 6 | 6 | 41.5 | 5 | 12 | 5 | 6 | 0 |
| 40 FT | 18 | 22 | 15 | 9 | 6 | 7 | 6 | 7.5 | 56.8 | 38.0 | 42.0 | 6 | 13 | 42.5 | 6 | 13 | 30.5 | 5 | 6 | 6 | 8 | 52.3 | 138 | 150 | 6 | 6 | 41.5 | 5 | 12 | 6 | 8 | 0 |
| 42 FT | 19 | 22 | 15 | 9 | 6 | 7.5 | 6 | 7 | 57.0 | 39.0 | 43.0 | 6 | 14 | 42.0 | 6 | 14 | 30.0 | 6 | 8.5 | 6 | 8 | 52.3 | 138 | 150 | 7 | 7.5 | 44.5 | 5 | 12 | 6 | 8 | 0 |
| 44 FT | 19 | 23 | 15 | 9 | 6 | 6.5 | 6 | 6.5 | 56.9 | 39.0 | 43.0 | 6 | 13 | 42.0 | 6 | 13 | 30.0 | 6 | 8.5 | 6 | 8 | 52.5 | 139 | 151 | 7 | 8 | 44.5 | 5 | 12 | 6 | 8 | 0 |
| 46 FT | 20 | 24 | 16 | 9 | 6 | 7 | 6 | 7 | 57.6 | 40.0 | 44.0 | 6 | 14 | 41.5 | 6 | 14 | 30.0 | 6 | 8 | 6 | 7.5 | 52.9 | 140 | 152 | 7 | 8 | 44.5 | 5 | 12 | 6 | 8 | 0 |
| 48 FT | 20 | 24 | 16 | 9 | 6 | 6.5 | 6 | 6.5 | 57.5 | 40.0 | 44.0 | 6 | 13 | 41.5 | 6 | 13 | 30.0 | 6 | 8 | 6 | 7.5 | 52.9 | 140 | 152 | 7 | 7.5 | 44.5 | 5 | 12 | 6 | 8 | 0 |
| 50 FT | 21 | 25 | 16 | 9 | 6 | 6.5 | 6 | 6 | 57.8 | 41.0 | 45.0 | 6 | 14 | 41.0 | 6 | 14 | 30.0 | 6 | 8 | 6 | 7.5 | 53.1 | 141 | 153 | 7 | 7.5 | 44.5 | 5 | 12 | 6 | 8 | 0 |

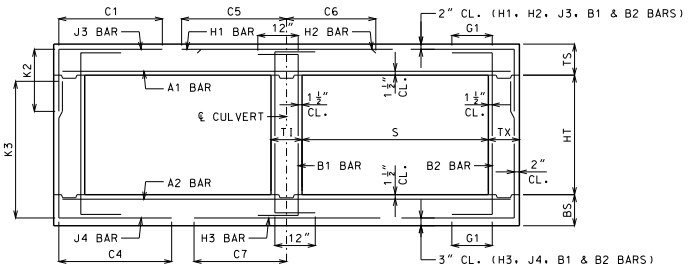


BAR DIMENSIONS DIAGRAM
SYMMETRICAL ABOUT ℄ CULVERT.

GENERAL NOTES:

IF DESIGN FILL IS BETWEEN TABULATED DESIGN FILLS, USE THE NEXT GREATER TABULATED DESIGN FILL, EXCEPT FOR DESIGN FILLS BETWEEN 2 FEET AND 4 FEET. FOR DESIGN FILLS BETWEEN 2 FEET AND 4 FEET USE THE GREATER MEMBER THICKNESS, AREA OF REINFORCEMENT AND BAR DIMENSIONS FROM THE 2 FEET AND 4 FEET TABULATED DESIGN FILLS. AREA OF REINFORCEMENT EQUALS BAR AREA PER FOOT SPACING.

SPECIAL DESIGNS ARE REQUIRED WHEN THE DESIGN FILL IS LESS THAN 1 FOOT OR GREATER THAN 50 FEET.

DIMENSIONS ARE IN INCHES UNLESS OTHERWISE SPECIFIED.

DESIGN FILLS ARE MEASURED FROM THE TOP OF TOP SLAB TO THE TOP OF EARTH FILL OR ROADWAY.

CULVERTS MEET STRENGTH AND SERVICEABILITY REQUIREMENTS FOR THE DESIGN VEHICULAR LIVE LOAD HL-93 MINUS THE LANE LOAD.


MISSOURI HIGHWAYS AND TRANSPORTATION COMMISSION
105 WEST CAPITOL
JEFFERSON CITY, MO 65102
1-888-ASK-MODOT (1-888-275-6636)


STATE OF MISSOURI
DENNIS W. HECKMANN
NUMBER PE-27141
PROFESSIONAL ENGINEER
THIS SHEET HAS BEEN SIGNED, SEALED AND DATED ELECTRONICALLY.

# CONCRETE DOUBLE BOX CULVERT

MEMBER THICKNESS
BAR SIZE, SPACING & DIMENSIONS

SPAN (S): 8 FEET
HEIGHT (HT): 10 THRU 11 FEET

DATE EFFECTIVE: 10/01/2011
DATE PREPARED: 9/8/2011

703.47

SHEET NO.
11 OF 27

IF A SEAL IS PRESENT ON THIS SHEET IT HAS BEEN ELECTRONICALLY SEALED AND DATED.

SPAN (S) = 9 FT  HEIGHT (HT) = 5 FT OR 6 FT OR 7 FT

| DESIGN FILL | MEMBER THICKNESS | | | | TOP SLAB BARS | | | | | | | | | | | | BOTTOM SLAB BARS | | | | | | | | | | | WALL BARS | | | | |
|---|---|---|---|---|---|---|---|---|---|---|---|---|---|---|---|---|---|---|---|---|---|---|---|---|---|---|---|---|---|---|---|---|
| | | | | | A1 BARS | | J3 BARS | | | | | | H1 BARS | | | H2 BARS | | | A2 BARS | | J4 BARS | | | | | H3 BARS | | | B1 BARS | | B2 BARS | | |
| | | | | | | | | | | K2 | | | | | | | | | | | | K3 | | | | | | | | | |
| | TS | BS | TX | TI | SIZE | SPA. | SIZE | SPA. | C1 | HT=5′ | HT=6′ | HT=7′ | SIZE | SPA. | C5 | SIZE | SPA. | C6 | SIZE | SPA. | SIZE | SPA. | C4 | HT=5′ | HT=6′ | HT=7′ | SIZE | SPA. | C7 | SIZE | SPA. | SIZE | SPA. | G1 |
| 1 FT | 13 | 9 | 8 | 8 | 5 | 6.5 | 4 | 7.5 | 45.3 | 29.0 | 29.0 | 29.0 | 5 | 17 | 89.5 | 5 | 17 | 28.5 | 4 | 6 | 4 | 6 | 47.3 | 65 | 77 | 89 | 5 | 6 | 44.0 | 5 | 12 | 5 | 12 | 12 |
| 2 FT | 13 | 10 | 8 | 8 | 5 | 6.5 | 4 | 7.5 | 45.3 | 29.0 | 29.0 | 29.0 | 5 | 16 | 89.5 | 5 | 16 | 27.5 | 4 | 6 | 4 | 7.5 | 44.5 | 66 | 78 | 90 | 5 | 6.5 | 44.0 | 5 | 12 | 5 | 12 | 12 |
| 4 FT | 9 | 9 | 8 | 8 | 5 | 8.5 | 5 | 6.5 | 42.1 | 25.0 | 25.0 | 25.0 | 5 | 15 | 59.0 | 5 | 15 | 28.5 | 5 | 8 | 4 | 6 | 39.5 | 65 | 77 | 89 | 6 | 6.5 | 46.0 | 5 | 11 | 5 | 12 | 12 |
| 6 FT | 9 | 9 | 8 | 8 | 5 | 8.5 | 5 | 6.5 | 36.9 | 25.0 | 25.0 | 29.0 | 5 | 14 | 47.0 | 5 | 14 | 27.5 | 5 | 7.5 | 5 | 7 | 36.5 | 65 | 77 | 89 | 6 | 6 | 45.0 | 5 | 12 | 5 | 12 | 12 |
| 8 FT | 9 | 10 | 8 | 8 | 5 | 8.5 | 5 | 6.5 | 35.6 | 25.0 | 25.0 | 25.0 | 5 | 12 | 44.0 | 5 | 12 | 27.0 | 5 | 7.5 | 4 | 6.5 | 34.6 | 66 | 78 | 90 | 6 | 6.5 | 45.0 | 5 | 12 | 5 | 12 | 0 |
| 10 FT | 10 | 11 | 8 | 8 | 5 | 8 | 5 | 7.5 | 34.3 | 26.0 | 26.0 | 26.0 | 5 | 12 | 43.0 | 5 | 12 | 26.5 | 5 | 7.5 | 4 | 6.5 | 33.3 | 67 | 79 | 91 | 6 | 6.5 | 44.5 | 5 | 12 | 5 | 12 | 0 |
| 12 FT | 11 | 12 | 8 | 8 | 5 | 7.5 | 5 | 8.5 | 33.0 | 27.0 | 27.0 | 27.0 | 5 | 12 | 42.5 | 5 | 12 | 26.5 | 5 | 7 | 4 | 6 | 32.1 | 68 | 80 | 92 | 6 | 6.5 | 44.5 | 5 | 12 | 5 | 12 | 0 |
| 14 FT | 12 | 13 | 8 | 8 | 5 | 7 | 5 | 8.5 | 32.1 | 28.0 | 28.0 | 28.0 | 5 | 12 | 42.0 | 5 | 12 | 26.5 | 5 | 6.5 | 4 | 6 | 31.5 | 69 | 81 | 93 | 6 | 6.5 | 44.5 | 5 | 12 | 5 | 12 | 0 |
| 16 FT | 13 | 14 | 8 | 8 | 5 | 6.5 | 5 | 8.5 | 31.5 | 29.0 | 29.0 | 33.0 | 6 | 16 | 44.5 | 6 | 16 | 29.5 | 5 | 6.5 | 5 | 8.5 | 31.0 | 70 | 82 | 94 | 6 | 6.5 | 44.5 | 5 | 12 | 5 | 12 | 0 |
| 18 FT | 13 | 15 | 8 | 8 | 5 | 6.5 | 5 | 8 | 31.3 | 29.0 | 29.0 | 33.0 | 6 | 15 | 44.5 | 6 | 15 | 29.5 | 5 | 6.5 | 5 | 8.5 | 30.5 | 71 | 83 | 95 | 6 | 6.5 | 44.5 | 5 | 12 | 5 | 12 | 0 |
| 20 FT | 14 | 15 | 8 | 8 | 5 | 6 | 5 | 8.5 | 29.3 | 30.0 | 30.0 | 34.0 | 6 | 16 | 43.5 | 6 | 16 | 29.0 | 5 | 6 | 5 | 8.5 | 29.1 | 71 | 83 | 95 | 6 | 6.5 | 44.5 | 5 | 12 | 5 | 12 | 0 |
| 22 FT | 15 | 16 | 8 | 8 | 5 | 6 | 5 | 8 | 34.1 | 31.0 | 31.0 | 35.0 | 6 | 15 | 49.5 | 6 | 15 | 35.0 | 5 | 6 | 5 | 8 | 29.1 | 72 | 84 | 96 | 6 | 6.5 | 44.5 | 5 | 12 | 5 | 12 | 0 |
| 24 FT | 15 | 17 | 8 | 8 | 6 | 7.5 | 5 | 8 | 34.3 | 31.0 | 31.0 | 35.0 | 6 | 14 | 49.5 | 6 | 14 | 35.0 | 5 | 6 | 5 | 7 | 28.9 | 73 | 85 | 97 | 6 | 6.5 | 44.5 | 5 | 12 | 5 | 12 | 0 |
| 26 FT | 16 | 18 | 8 | 8 | 6 | 8 | 5 | 7 | 34.1 | 32.0 | 36.0 | 36.0 | 6 | 14 | 49.0 | 6 | 14 | 35.0 | 5 | 6 | 5 | 6.5 | 29.0 | 74 | 86 | 98 | 6 | 6.5 | 44.5 | 5 | 12 | 5 | 11 | 0 |
| 28 FT | 17 | 19 | 8 | 8 | 6 | 7.5 | 5 | 6.5 | 34.0 | 37.0 | 37.0 | 37.0 | 6 | 14 | 49.0 | 6 | 14 | 35.0 | 5 | 6 | 5 | 6.5 | 29.1 | 75 | 87 | 99 | 6 | 6 | 44.5 | 5 | 12 | 5 | 10 | 0 |
| 30 FT | 18 | 20 | 8 | 8 | 6 | 7.5 | 5 | 6.5 | 34.0 | 38.0 | 38.0 | 38.0 | 6 | 13 | 48.5 | 6 | 13 | 34.0 | 6 | 8.5 | 5 | 6 | 29.3 | 76 | 88 | 100 | 6 | 6 | 44.5 | 5 | 12 | 5 | 9.5 | 0 |
| 32 FT | 19 | 21 | 8 | 8 | 6 | 7.5 | 5 | 6 | 34.1 | 39.0 | 39.0 | 39.0 | 6 | 13 | 48.0 | 6 | 13 | 33.0 | 6 | 8.5 | 6 | 7.5 | 32.5 | 77 | 89 | 101 | 7 | 7.5 | 47.0 | 5 | 12 | 5 | 9.5 | 0 |
| 34 FT | 20 | 21 | 8 | 8 | 6 | 7.5 | 6 | 7.5 | 38.0 | 44.0 | 44.0 | 44.0 | 6 | 12 | 47.5 | 6 | 12 | 32.5 | 6 | 7.5 | 6 | 7.5 | 32.6 | 77 | 89 | 101 | 7 | 7.5 | 47.0 | 5 | 12 | 5 | 9.5 | 0 |
| 36 FT | 20 | 22 | 8 | 8 | 6 | 7 | 6 | 7.5 | 38.0 | 44.0 | 44.0 | 44.0 | 6 | 12 | 47.5 | 6 | 12 | 33.0 | 6 | 8 | 6 | 7 | 32.6 | 78 | 90 | 102 | 7 | 7.5 | 47.0 | 5 | 12 | 5 | 9.5 | 0 |
| 38 FT | 21 | 23 | 8 | 8 | 6 | 7 | 6 | 7 | 38.1 | 45.0 | 45.0 | 45.0 | 6 | 12 | 47.0 | 6 | 12 | 32.0 | 6 | 7.5 | 6 | 6.5 | 32.8 | 79 | 91 | 103 | 7 | 7 | 47.0 | 5 | 12 | 5 | 9 | 0 |
| 40 FT | 22 | 24 | 8 | 8 | 6 | 6.5 | 6 | 6.5 | 38.3 | 46.0 | 46.0 | 46.0 | 7 | 15 | 51.5 | 7 | 15 | 36.0 | 6 | 7.5 | 6 | 6 | 33.0 | 80 | 92 | 104 | 7 | 7 | 47.0 | 5 | 12 | 5 | 8 | 0 |
| 42 FT | 22 | 24 | 8 | 8 | 6 | 6.5 | 6 | 6 | 38.1 | 46.0 | 46.0 | 46.0 | 7 | 15 | 51.5 | 7 | 15 | 36.5 | 6 | 7.5 | 6 | 6 | 33.0 | 80 | 92 | 104 | 7 | 7 | 47.0 | 5 | 12 | 5 | 7.5 | 0 |
| 44 FT | 23 | 25 | 9 | 8 | 6 | 6.5 | 6 | 7 | 39.0 | 47.0 | 47.0 | 47.0 | 7 | 15 | 50.5 | 7 | 15 | 36.0 | 6 | 7.5 | 6 | 7 | 33.5 | 81 | 93 | 105 | 7 | 7 | 47.0 | 5 | 12 | 5 | 8.5 | 0 |
| 46 FT | 24 | 26 | 9 | 8 | 6 | 6 | 6 | 7 | 39.0 | 48.0 | 48.0 | 48.0 | 7 | 15 | 49.5 | 7 | 15 | 35.5 | 6 | 7.5 | 6 | 6.5 | 33.8 | 82 | 94 | 106 | 7 | 7 | 47.0 | 5 | 12 | 5 | 8 | 0 |
| 48 FT | 24 | 26 | 9 | 8 | 6 | 6 | 6 | 7 | 39.0 | 48.0 | 48.0 | 48.0 | 7 | 15 | 49.5 | 7 | 15 | 35.5 | 6 | 6.5 | 6 | 6.5 | 33.8 | 82 | 94 | 106 | 7 | 6.5 | 47.0 | 5 | 12 | 5 | 8 | 0 |
| 50 FT | 25 | 27 | 9 | 8 | 6 | 6 | 6 | 6.5 | 39.0 | 49.0 | 49.0 | 49.0 | 7 | 15 | 49.0 | 7 | 15 | 35.5 | 6 | 7 | 6 | 6.5 | 34.0 | 83 | 95 | 107 | 7 | 6.5 | 47.0 | 5 | 12 | 5 | 7.5 | 0 |

SPAN (S) = 9 FT  HEIGHT (HT) = 8 FT OR 9 FT OR 10 FT

| DESIGN FILL | MEMBER THICKNESS | | | | TOP SLAB BARS | | | | | | | | | | | | BOTTOM SLAB BARS | | | | | | | | | | | WALL BARS | | | | |
|---|---|---|---|---|---|---|---|---|---|---|---|---|---|---|---|---|---|---|---|---|---|---|---|---|---|---|---|---|---|---|---|---|
| | | | | | A1 BARS | | J3 BARS | | | | | | H1 BARS | | | H2 BARS | | | A2 BARS | | J4 BARS | | | | | H3 BARS | | | B1 BARS | | B2 BARS | | |
| | | | | | | | | | | K2 | | | | | | | | | | | | K3 | | | | | | | | | |
| | TS | BS | TX | TI | SIZE | SPA. | SIZE | SPA. | C1 | HT=8′ | HT=9′ | HT=10′ | SIZE | SPA. | C5 | SIZE | SPA. | C6 | SIZE | SPA. | SIZE | SPA. | C4 | HT=8′ | HT=9′ | HT=10′ | SIZE | SPA. | C7 | SIZE | SPA. | SIZE | SPA. | G1 |
| 1 FT | 13 | 10 | 8 | 8 | 5 | 6.5 | 5 | 8.5 | 47.3 | 29.0 | 29.0 | 33.0 | 5 | 18 | 91.5 | 5 | 18 | 29.0 | 4 | 6 | 5 | 6 | 69.0 | 102 | 114 | 126 | 5 | 6.5 | 44.5 | 5 | 12 | 5 | 12 | 12 |
| 2 FT | 13 | 10 | 8 | 8 | 5 | 6.5 | 5 | 8.5 | 47.3 | 29.0 | 29.0 | 33.0 | 5 | 17 | 91.5 | 5 | 17 | 28.0 | 5 | 9 | 6 | 7 | 66.6 | 102 | 114 | 126 | 5 | 6 | 44.0 | 5 | 12 | 5 | 12 | 12 |
| 4 FT | 9 | 9 | 8 | 8 | 5 | 8.5 | 6 | 7 | 47.3 | 29.0 | 33.0 | 33.0 | 5 | 15 | 91.5 | 5 | 15 | 29.0 | 5 | 7.5 | 6 | 6 | 59.4 | 101 | 113 | 125 | 6 | 6 | 46.0 | 5 | 12 | 5 | 10.5 | 12 |
| 6 FT | 9 | 10 | 9 | 8 | 5 | 8.5 | 5 | 6 | 54.1 | 25.0 | 25.0 | 29.0 | 5 | 14 | 48.0 | 5 | 14 | 27.5 | 5 | 8 | 5 | 6 | 51.8 | 102 | 114 | 126 | 6 | 6.5 | 45.5 | 5 | 12 | 5 | 11.5 | 12 |
| 8 FT | 9 | 11 | 9 | 8 | 5 | 8.5 | 5 | 6 | 48.0 | 25.0 | 29.0 | 29.0 | 5 | 13 | 44.0 | 5 | 13 | 27.0 | 5 | 8 | 5 | 6 | 49.3 | 103 | 115 | 127 | 6 | 7 | 45.0 | 5 | 12 | 5 | 11 | 0 |
| 10 FT | 10 | 11 | 9 | 8 | 5 | 8 | 5 | 6 | 46.6 | 26.0 | 30.0 | 30.0 | 5 | 12 | 43.0 | 5 | 12 | 26.5 | 5 | 7 | 6 | 7 | 50.0 | 103 | 115 | 127 | 6 | 6.5 | 44.5 | 5 | 12 | 5 | 10 | 0 |
| 12 FT | 11 | 12 | 9 | 8 | 5 | 7.5 | 6 | 7 | 48.4 | 31.0 | 31.0 | 35.0 | 5 | 12 | 42.0 | 5 | 12 | 26.5 | 5 | 7 | 6 | 7 | 49.0 | 104 | 116 | 128 | 6 | 6.5 | 44.5 | 5 | 12 | 5 | 9.5 | 0 |
| 14 FT | 12 | 13 | 9 | 8 | 5 | 7 | 6 | 7.5 | 47.4 | 32.0 | 32.0 | 36.0 | 5 | 12 | 41.5 | 5 | 12 | 26.5 | 5 | 6.5 | 6 | 7 | 48.1 | 105 | 117 | 129 | 6 | 6.5 | 44.5 | 5 | 12 | 5 | 8.5 | 0 |
| 16 FT | 12 | 14 | 9 | 8 | 5 | 7 | 6 | 6.5 | 46.4 | 32.0 | 32.0 | 36.0 | 6 | 15 | 44.5 | 6 | 15 | 29.5 | 5 | 6.5 | 6 | 7 | 47.5 | 106 | 118 | 130 | 6 | 6.5 | 44.5 | 5 | 12 | 5 | 8.5 | 0 |
| 18 FT | 13 | 15 | 9 | 8 | 5 | 6.5 | 6 | 6.5 | 46.0 | 33.0 | 33.0 | 37.0 | 6 | 15 | 44.0 | 6 | 15 | 29.0 | 5 | 6.5 | 6 | 7.5 | 47.3 | 107 | 119 | 131 | 6 | 7 | 44.5 | 5 | 12 | 5 | 8.5 | 0 |
| 20 FT | 14 | 15 | 9 | 8 | 5 | 6.5 | 5 | 6 | 40.1 | 34.0 | 34.0 | 34.0 | 6 | 16 | 43.0 | 6 | 16 | 29.0 | 5 | 6 | 6 | 7.5 | 44.4 | 107 | 119 | 131 | 6 | 6.5 | 44.5 | 5 | 12 | 5 | 8.5 | 0 |
| 22 FT | 14 | 16 | 10 | 8 | 5 | 6 | 5 | 6 | 40.5 | 34.0 | 34.0 | 34.0 | 6 | 15 | 43.0 | 6 | 15 | 29.0 | 5 | 6 | 5 | 7 | 41.5 | 108 | 120 | 132 | 6 | 6.5 | 44.5 | 5 | 12 | 5 | 8 | 0 |
| 24 FT | 15 | 17 | 10 | 8 | 6 | 8 | 6 | 8 | 49.5 | 35.0 | 35.0 | 35.0 | 6 | 15 | 48.5 | 6 | 15 | 35.0 | 5 | 6 | 5 | 6.5 | 41.6 | 109 | 121 | 133 | 6 | 6.5 | 44.5 | 5 | 12 | 5 | 8 | 0 |
| 26 FT | 16 | 18 | 11 | 8 | 6 | 8 | 5 | 6 | 46.1 | 36.0 | 36.0 | 36.0 | 6 | 15 | 48.0 | 6 | 15 | 34.5 | 5 | 6 | 5 | 7 | 41.9 | 110 | 122 | 134 | 6 | 6.5 | 44.5 | 5 | 12 | 5 | 7.5 | 0 |
| 28 FT | 17 | 19 | 11 | 8 | 6 | 8 | 6 | 8 | 50.1 | 37.0 | 37.0 | 37.0 | 6 | 14 | 47.5 | 6 | 14 | 33.5 | 5 | 6 | 5 | 7 | 42.0 | 111 | 123 | 135 | 6 | 6 | 44.5 | 5 | 12 | 5 | 7.5 | 0 |
| 30 FT | 18 | 20 | 12 | 8 | 6 | 8 | 5 | 6 | 46.8 | 38.0 | 38.0 | 38.0 | 6 | 13 | 47.0 | 6 | 13 | 32.5 | 6 | 8.5 | 5 | 6.5 | 42.4 | 112 | 124 | 136 | 6 | 6 | 44.5 | 5 | 12 | 5 | 7.5 | 0 |
| 32 FT | 18 | 21 | 12 | 8 | 6 | 7.5 | 6 | 8 | 50.8 | 38.0 | 38.0 | 38.0 | 6 | 13 | 47.0 | 6 | 13 | 33.5 | 6 | 8 | 5 | 6.5 | 42.5 | 113 | 125 | 137 | 7 | 7.5 | 47.5 | 5 | 12 | 5 | 7 | 0 |
| 34 FT | 19 | 22 | 12 | 8 | 6 | 7 | 6 | 7.5 | 50.9 | 39.0 | 39.0 | 39.0 | 6 | 13 | 46.0 | 6 | 13 | 32.5 | 6 | 8 | 5 | 6.5 | 42.8 | 114 | 126 | 138 | 7 | 7.5 | 47.5 | 5 | 12 | 5 | 7 | 0 |
| 36 FT | 20 | 23 | 13 | 8 | 6 | 7 | 6 | 8 | 51.5 | 40.0 | 40.0 | 40.0 | 6 | 12 | 45.0 | 6 | 12 | 31.5 | 6 | 8 | 5 | 6 | 43.1 | 115 | 127 | 139 | 7 | 7 | 47.5 | 5 | 12 | 5 | 6.5 | 0 |
| 38 FT | 20 | 23 | 13 | 8 | 6 | 6.5 | 6 | 7.5 | 51.4 | 40.0 | 40.0 | 40.0 | 6 | 12 | 45.0 | 6 | 12 | 32.0 | 6 | 7.5 | 5 | 6 | 43.0 | 115 | 127 | 139 | 7 | 7 | 47.5 | 5 | 12 | 5 | 6.5 | 0 |
| 40 FT | 21 | 24 | 13 | 8 | 6 | 6.5 | 6 | 7 | 51.5 | 41.0 | 41.0 | 41.0 | 6 | 12 | 44.5 | 6 | 12 | 31.0 | 6 | 7.5 | 5 | 6 | 43.3 | 116 | 128 | 140 | 7 | 7 | 47.5 | 5 | 12 | 5 | 6.5 | 0 |
| 42 FT | 21 | 25 | 14 | 8 | 6 | 6 | 6 | 7.5 | 52.3 | 41.0 | 41.0 | 41.0 | 6 | 12 | 44.5 | 6 | 12 | 31.5 | 6 | 7.5 | 5 | 6 | 43.5 | 117 | 129 | 141 | 7 | 7 | 47.5 | 5 | 12 | 5 | 6 | 0 |
| 44 FT | 22 | 25 | 14 | 8 | 6 | 6.5 | 6 | 7 | 52.1 | 42.0 | 42.0 | 42.0 | 7 | 16 | 49.0 | 7 | 16 | 35.5 | 6 | 6.5 | 5 | 6 | 43.6 | 117 | 129 | 141 | 7 | 6.5 | 47.5 | 5 | 12 | 5 | 6 | 0 |
| 46 FT | 23 | 26 | 14 | 8 | 6 | 6 | 6 | 7 | 52.1 | 43.0 | 43.0 | 43.0 | 6 | 12 | 43.5 | 6 | 12 | 30.5 | 6 | 7 | 5 | 6 | 43.9 | 118 | 130 | 142 | 7 | 6.5 | 47.5 | 5 | 12 | 5 | 6 | 0 |
| 48 FT | 23 | 27 | 15 | 8 | 6 | 6 | 6 | 7 | 53.0 | 43.0 | 43.0 | 47.0 | 6 | 12 | 43.5 | 6 | 12 | 30.0 | 6 | 7 | 6 | 8.5 | 47.1 | 119 | 131 | 143 | 7 | 6.5 | 47.5 | 5 | 12 | 5 | 6 | 0 |
| 50 FT | 24 | 28 | 15 | 8 | 6 | 6 | 6 | 7 | 53.0 | 44.0 | 44.0 | 48.0 | 6 | 12 | 43.0 | 6 | 12 | 30.0 | 6 | 7 | 6 | 8 | 47.5 | 120 | 132 | 144 | 7 | 6.5 | 47.5 | 5 | 12 | 6 | 8 | 0 |

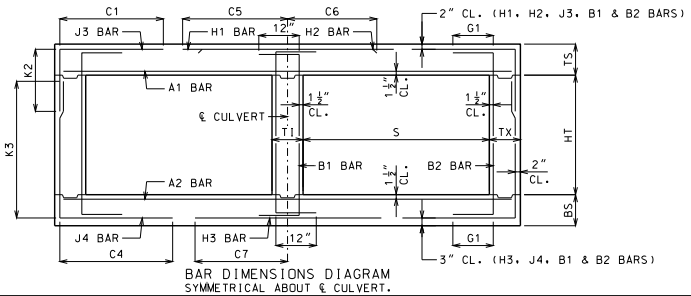


BAR DIMENSIONS DIAGRAM
SYMMETRICAL ABOUT ℄ CULVERT.

GENERAL NOTES:

IF DESIGN FILL IS BETWEEN TABULATED DESIGN FILLS, USE THE NEXT GREATER TABULATED DESIGN FILL, EXCEPT FOR DESIGN FILLS BETWEEN 2 FEET AND 4 FEET. FOR DESIGN FILLS BETWEEN 2 FEET AND 4 FEET USE THE GREATER MEMBER THICKNESS, AREA OF REINFORCEMENT AND BAR DIMENSIONS FROM THE 2 FEET AND 4 FEET TABULATED DESIGN FILLS. AREA OF REINFORCEMENT EQUALS BAR AREA PER FOOT SPACING.

SPECIAL DESIGNS ARE REQUIRED WHEN THE DESIGN FILL IS LESS THAN 1 FOOT OR GREATER THAN 50 FEET.

DIMENSIONS ARE IN INCHES UNLESS OTHERWISE SPECIFIED.

DESIGN FILLS ARE MEASURED FROM THE TOP OF TOP SLAB TO THE TOP OF EARTH FILL OR ROADWAY.

CULVERTS MEET STRENGTH AND SERVICEABILITY REQUIREMENTS FOR THE DESIGN VEHICULAR LIVE LOAD HL-93 MINUS THE LANE LOAD.


MISSOURI HIGHWAYS AND TRANSPORTATION COMMISSION
105 WEST CAPITOL
JEFFERSON CITY, MO 65102
1-888-ASK-MODOT (1-888-275-6636)


STATE OF MISSOURI
DENNIS W. HECKMAN
NUMBER PE-27141
PROFESSIONAL ENGINEER
THIS SHEET HAS BEEN SIGNED, SEALED AND DATED ELECTRONICALLY.

# CONCRETE DOUBLE BOX CULVERT

MEMBER THICKNESS
BAR SIZE, SPACING & DIMENSIONS

SPAN (S): 9 FEET
HEIGHT (HT): 5 THRU 10 FEET

DATE EFFECTIVE: 10/01/2011
DATE PREPARED: 9/8/2011

703.47

SHEET NO.
12 OF 27

IF A SEAL IS PRESENT ON THIS SHEET IT HAS BEEN ELECTRONICALLY SEALED AND DATED.

| SPAN (S) = 9 FT HEIGHT (HT) = 11 FT OR 12 FT | | | | | | | | | | | | | | | | | | | | | | | | | | | | | | | |
|---|---|---|---|---|---|---|---|---|---|---|---|---|---|---|---|---|---|---|---|---|---|---|---|---|---|---|---|---|---|---|---|
| DESIGN FILL | MEMBER THICKNESS | | | | TOP SLAB BARS | | | | | | | | | | | | | | BOTTOM SLAB BARS | | | | | | | | | | WALL BARS | | | | |
| | | | | | A1 BARS | | J3 BARS | | | | | H1 BARS | | | H2 BARS | | | A2 BARS | | J4 BARS | | | | | H3 BARS | | | B1 BARS | | B2 BARS | | |
| | TS | BS | TX | TI | SIZE | SPA. | SIZE | SPA. | C1 | K2 HT=11' | K2 HT=12' | SIZE | SPA. | C5 | SIZE | SPA. | C6 | SIZE | SPA. | SIZE | SPA. | C4 | K3 HT=11' | K3 HT=12' | SIZE | SPA. | C7 | SIZE | SPA. | SIZE | SPA. | G1 |
| 1 FT | 13 | 10 | 9 | 10 | 5 | 6.5 | 5 | 8 | 48.3 | 33.0 | 33.0 | 5 | 17 | 93.0 | 5 | 17 | 29.0 | 5 | 9 | 6 | 6.5 | 79.4 | 138 | 150 | 5 | 6 | 44.5 | 5 | 12 | 5 | 9.5 | 12 |
| 2 FT | 13 | 11 | 9 | 10 | 5 | 6.5 | 5 | 7.5 | 48.3 | 33.0 | 33.0 | 5 | 16 | 93.0 | 5 | 16 | 28.0 | 4 | 6 | 6 | 7 | 77.0 | 139 | 151 | 5 | 6 | 44.5 | 5 | 12 | 5 | 9 | 12 |
| 4 FT | 9 | 10 | 9 | 10 | 5 | 8.5 | 5 | 6 | 48.3 | 29.0 | 29.0 | 5 | 15 | 93.0 | 5 | 15 | 29.0 | 5 | 8 | 6 | 6 | 71.4 | 138 | 150 | 6 | 7 | 46.5 | 5 | 12 | 5 | 8.5 | 12 |
| 6 FT | 9 | 11 | 9 | 10 | 5 | 8.5 | 6 | 7 | 69.3 | 29.0 | 33.0 | 5 | 15 | 47.0 | 5 | 15 | 28.0 | 5 | 8.5 | 6 | 6 | 68.0 | 139 | 151 | 5 | 6 | 43.0 | 5 | 12 | 5 | 8.5 | 12 |
| 8 FT | 9 | 11 | 9 | 10 | 5 | 8.5 | 6 | 6.5 | 61.6 | 29.0 | 33.0 | 5 | 13 | 44.0 | 5 | 13 | 27.5 | 5 | 7.5 | 6 | 6 | 63.8 | 139 | 151 | 6 | 7 | 45.5 | 5 | 12 | 5 | 8.5 | 0 |
| 10 FT | 10 | 11 | 10 | 10 | 5 | 8 | 5 | 6 | 56.4 | 30.0 | 30.0 | 5 | 13 | 43.0 | 5 | 13 | 27.5 | 5 | 7 | 6 | 6 | 60.1 | 139 | 151 | 6 | 6.5 | 45.0 | 5 | 12 | 5 | 8 | 0 |
| 12 FT | 11 | 12 | 10 | 10 | 5 | 7.5 | 5 | 6 | 55.0 | 31.0 | 31.0 | 5 | 13 | 42.5 | 5 | 13 | 27.0 | 5 | 6.5 | 6 | 6.5 | 59.1 | 140 | 152 | 6 | 6.5 | 45.0 | 5 | 12 | 5 | 8 | 0 |
| 14 FT | 11 | 13 | 10 | 10 | 5 | 7.5 | 6 | 7 | 55.6 | 31.0 | 35.0 | 6 | 16 | 45.0 | 6 | 16 | 30.0 | 5 | 6.5 | 6 | 6.5 | 58.5 | 141 | 153 | 6 | 6.5 | 45.0 | 5 | 12 | 5 | 8 | 0 |
| 16 FT | 12 | 14 | 11 | 10 | 5 | 7 | 6 | 8.5 | 54.6 | 32.0 | 36.0 | 6 | 16 | 44.5 | 6 | 16 | 30.0 | 5 | 6.5 | 6 | 7 | 57.4 | 142 | 154 | 6 | 6.5 | 45.0 | 5 | 12 | 5 | 7.5 | 0 |
| 18 FT | 13 | 15 | 11 | 10 | 5 | 6.5 | 6 | 7.5 | 54.6 | 33.0 | 37.0 | 6 | 16 | 44.0 | 6 | 16 | 30.0 | 5 | 6.5 | 6 | 6.5 | 57.1 | 143 | 155 | 6 | 7 | 44.5 | 5 | 12 | 5 | 7.5 | 0 |
| 20 FT | 13 | 15 | 11 | 10 | 5 | 6.5 | 6 | 7.5 | 51.5 | 33.0 | 37.0 | 6 | 15 | 43.5 | 6 | 15 | 29.5 | 5 | 6 | 6 | 6.5 | 53.4 | 143 | 155 | 6 | 6.5 | 44.5 | 5 | 12 | 5 | 7.5 | 0 |
| 22 FT | 14 | 16 | 12 | 10 | 5 | 6 | 6 | 8 | 51.9 | 34.0 | 38.0 | 6 | 16 | 43.0 | 6 | 16 | 29.5 | 5 | 6 | 6 | 7.5 | 53.6 | 144 | 156 | 6 | 6.5 | 44.5 | 5 | 12 | 5 | 7 | 0 |
| 24 FT | 15 | 17 | 12 | 10 | 5 | 6 | 6 | 7.5 | 58.0 | 35.0 | 39.0 | 6 | 16 | 48.5 | 6 | 16 | 35.5 | 5 | 6 | 6 | 7.5 | 53.8 | 145 | 157 | 6 | 6.5 | 44.5 | 5 | 12 | 5 | 7 | 0 |
| 26 FT | 16 | 18 | 13 | 10 | 6 | 8.5 | 6 | 7.5 | 58.5 | 36.0 | 40.0 | 6 | 15 | 48.0 | 6 | 15 | 34.5 | 5 | 6 | 6 | 8 | 54.0 | 146 | 158 | 6 | 6.5 | 44.5 | 5 | 12 | 5 | 6.5 | 0 |
| 28 FT | 17 | 19 | 13 | 10 | 6 | 8 | 6 | 7 | 58.6 | 37.0 | 41.0 | 6 | 14 | 47.5 | 6 | 14 | 33.5 | 6 | 8.5 | 6 | 8 | 54.1 | 147 | 159 | 6 | 6 | 44.5 | 5 | 12 | 5 | 6.5 | 0 |
| 30 FT | 17 | 20 | 13 | 10 | 6 | 7.5 | 6 | 6.5 | 58.5 | 37.0 | 41.0 | 6 | 14 | 47.5 | 6 | 14 | 34.5 | 6 | 8 | 6 | 7 | 54.4 | 148 | 160 | 6 | 6 | 44.5 | 5 | 12 | 5 | 6.5 | 0 |
| 32 FT | 18 | 21 | 14 | 10 | 6 | 7.5 | 6 | 7 | 59.1 | 38.0 | 42.0 | 6 | 13 | 47.0 | 6 | 13 | 33.5 | 6 | 8 | 6 | 8 | 54.6 | 149 | 161 | 7 | 7.5 | 47.5 | 5 | 12 | 5 | 6 | 0 |
| 34 FT | 19 | 22 | 14 | 10 | 6 | 7.5 | 6 | 6.5 | 59.3 | 39.0 | 43.0 | 6 | 13 | 46.5 | 6 | 13 | 32.5 | 6 | 8 | 6 | 8 | 54.9 | 150 | 162 | 7 | 7.5 | 47.5 | 5 | 12 | 5 | 6 | 0 |
| 36 FT | 19 | 22 | 15 | 10 | 6 | 7 | 6 | 6.5 | 59.5 | 43.0 | 43.0 | 6 | 13 | 46.0 | 6 | 13 | 33.0 | 6 | 7 | 6 | 8 | 54.9 | 150 | 162 | 7 | 7.5 | 48.0 | 5 | 12 | 6 | 8 | 0 |
| 38 FT | 20 | 23 | 15 | 10 | 6 | 7 | 6 | 6.5 | 59.6 | 44.0 | 44.0 | 6 | 12 | 45.5 | 6 | 12 | 32.0 | 6 | 7.5 | 6 | 8 | 55.1 | 151 | 163 | 7 | 7 | 47.5 | 5 | 12 | 6 | 8 | 0 |
| 40 FT | 20 | 24 | 16 | 10 | 6 | 6 | 6 | 6.5 | 60.0 | 44.0 | 44.0 | 6 | 12 | 45.0 | 6 | 12 | 32.5 | 6 | 7.5 | 6 | 7.5 | 55.5 | 152 | 164 | 7 | 7 | 48.0 | 5 | 12 | 6 | 8 | 0 |
| 42 FT | 21 | 25 | 16 | 10 | 6 | 6.5 | 6 | 6 | 60.3 | 45.0 | 45.0 | 6 | 12 | 44.5 | 6 | 12 | 31.5 | 6 | 7.5 | 6 | 7.5 | 55.8 | 153 | 165 | 7 | 7 | 48.0 | 5 | 12 | 6 | 8 | 0 |
| 44 FT | 22 | 25 | 17 | 10 | 6 | 6.5 | 6 | 6.5 | 60.8 | 46.0 | 46.0 | 6 | 12 | 44.0 | 6 | 12 | 31.0 | 6 | 6.5 | 6 | 7 | 55.9 | 153 | 165 | 7 | 6.5 | 48.0 | 5 | 12 | 6 | 7.5 | 0 |
| 46 FT | 22 | 26 | 17 | 10 | 6 | 6 | 6 | 6 | 60.8 | 46.0 | 46.0 | 6 | 12 | 44.0 | 6 | 12 | 31.0 | 6 | 7 | 6 | 7 | 56.1 | 154 | 166 | 7 | 6.5 | 48.0 | 5 | 12 | 6 | 7.5 | 0 |
| 48 FT | 23 | 27 | 18 | 10 | 6 | 6 | 6 | 6.5 | 61.5 | 47.0 | 47.0 | 6 | 12 | 43.5 | 6 | 12 | 31.0 | 6 | 7 | 6 | 6.5 | 56.6 | 155 | 167 | 7 | 6.5 | 48.0 | 5 | 12 | 6 | 7 | 0 |
| 50 FT | 23 | 28 | 19 | 10 | 6 | 6 | 6 | 6.5 | 62.0 | 43.0 | 47.0 | 6 | 12 | 43.5 | 6 | 12 | 31.0 | 6 | 7 | 6 | 7 | 57.0 | 156 | 168 | 7 | 6.5 | 48.0 | 5 | 12 | 6 | 7 | 0 |

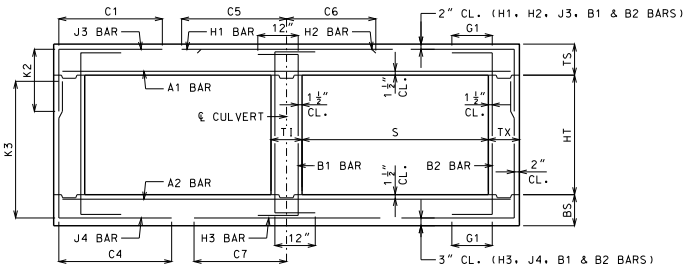


BAR DIMENSIONS DIAGRAM
SYMMETRICAL ABOUT ℄ CULVERT.

GENERAL NOTES:

IF DESIGN FILL IS BETWEEN TABULATED DESIGN FILLS, USE THE NEXT GREATER TABULATED DESIGN FILL, EXCEPT FOR DESIGN FILLS BETWEEN 2 FEET AND 4 FEET. FOR DESIGN FILLS BETWEEN 2 FEET AND 4 FEET USE THE GREATER MEMBER THICKNESS, AREA OF REINFORCEMENT AND BAR DIMENSIONS FROM THE 2 FEET AND 4 FEET TABULATED DESIGN FILLS. AREA OF REINFORCEMENT EQUALS BAR AREA PER FOOT SPACING.

SPECIAL DESIGNS ARE REQUIRED WHEN THE DESIGN FILL IS LESS THAN 1 FOOT OR GREATER THAN 50 FEET.

DIMENSIONS ARE IN INCHES UNLESS OTHERWISE SPECIFIED.

DESIGN FILLS ARE MEASURED FROM THE TOP OF TOP SLAB TO THE TOP OF EARTH FILL OR ROADWAY.

CULVERTS MEET STRENGTH AND SERVICEABILITY REQUIREMENTS FOR THE DESIGN VEHICULAR LIVE LOAD HL-93 MINUS THE LANE LOAD.


MISSOURI HIGHWAYS AND TRANSPORTATION COMMISSION
105 WEST CAPITOL
JEFFERSON CITY, MO 65102
1-888-ASK-MODOT (1-888-275-6636)


STATE OF MISSOURI
DENNIS W. HECKMANN
NUMBER PE-27141
PROFESSIONAL ENGINEER
THIS SHEET HAS BEEN SIGNED, SEALED AND DATED ELECTRONICALLY.

# CONCRETE DOUBLE BOX CULVERT

MEMBER THICKNESS
BAR SIZE, SPACING & DIMENSIONS

SPAN (S): 9 FEET
HEIGHT (HT): 11 THRU 12 FEET

DATE EFFECTIVE: 10/01/2011
DATE PREPARED: 9/8/2011

703.47

SHEET NO.
13 OF 27

IF A SEAL IS PRESENT ON THIS SHEET IT HAS BEEN ELECTRONICALLY SEALED AND DATED.

## SPAN (S) = 10 FT  HEIGHT (HT) = 5 FT OR 6 FT OR 7 FT

| DESIGN FILL | MEMBER THICKNESS | | | | TOP SLAB BARS | | | | | | | | | | | | | BOTTOM SLAB BARS | | | | | | | | | | | | WALL BARS | | | | |
|---|---|---|---|---|---|---|---|---|---|---|---|---|---|---|---|---|---|---|---|---|---|---|---|---|---|---|---|---|---|---|---|---|---|---|
| | | | | | A1 BARS | | J3 BARS | | | | | | H1 BARS | | | H2 BARS | | | A2 BARS | | J4 BARS | | | | | H3 BARS | | | B1 BARS | | B2 BARS | | |
| | | | | | | | | | | K2 | | | | | | | | | | | | K3 | | | | | | | | | | |
| | TS | BS | TX | TI | SIZE | SPA. | SIZE | SPA. | C1 | HT=5′ | HT=6′ | HT=7′ | SIZE | SPA. | C5 | SIZE | SPA. | C6 | SIZE | SPA. | SIZE | SPA. | C4 | HT=5′ | HT=6′ | HT=7′ | SIZE | SPA. | C7 | SIZE | SPA. | SIZE | SPA. | G1 |
| 1 FT | 13 | 10 | 8 | 8 | 5 | 6.5 | 4 | 7 | 48.9 | 29.0 | 29.0 | 29.0 | 5 | 15 | 98.0 | 5 | 15 | 29.0 | 4 | 6 | 4 | 7 | 48.1 | 66 | 78 | 90 | 5 | 6 | 47.5 | 5 | 12 | 5 | 12 | 12 |
| 2 FT | 13 | 10 | 8 | 8 | 5 | 6.5 | 4 | 7 | 48.9 | 29.0 | 29.0 | 29.0 | 5 | 13 | 98.0 | 5 | 13 | 28.5 | 5 | 8.5 | 4 | 6.5 | 43.8 | 66 | 78 | 90 | 6 | 7 | 50.0 | 5 | 12 | 5 | 12 | 12 |
| 4 FT | 9 | 10 | 8 | 8 | 5 | 7.5 | 6 | 7.5 | 43.1 | 25.0 | 25.0 | 25.0 | 5 | 12 | 62.0 | 5 | 12 | 30.0 | 5 | 8 | 4 | 7 | 38.9 | 66 | 78 | 90 | 6 | 6.5 | 49.5 | 5 | 8.5 | 5 | 12 | 12 |
| 6 FT | 9 | 10 | 8 | 8 | 5 | 8.5 | 5 | 6 | 38.0 | 25.0 | 25.0 | 25.0 | 6 | 15 | 53.5 | 6 | 15 | 32.0 | 5 | 7 | 4 | 6.5 | 36.1 | 66 | 78 | 90 | 6 | 6 | 48.5 | 5 | 12 | 5 | 12 | 12 |
| 8 FT | 10 | 11 | 8 | 8 | 5 | 8 | 5 | 7.5 | 36.0 | 26.0 | 26.0 | 26.0 | 6 | 16 | 51.0 | 6 | 16 | 31.5 | 5 | 7 | 4 | 6.5 | 34.1 | 67 | 79 | 91 | 6 | 6 | 48.0 | 5 | 12 | 5 | 12 | 0 |
| 10 FT | 11 | 12 | 8 | 8 | 5 | 7.5 | 5 | 8 | 34.1 | 27.0 | 27.0 | 27.0 | 6 | 15 | 49.5 | 6 | 15 | 31.0 | 5 | 6.5 | 4 | 6 | 32.6 | 68 | 80 | 92 | 6 | 6.5 | 48.0 | 5 | 12 | 5 | 12 | 0 |
| 12 FT | 12 | 13 | 8 | 8 | 5 | 7 | 5 | 8.5 | 32.8 | 28.0 | 28.0 | 28.0 | 6 | 15 | 48.5 | 6 | 15 | 31.0 | 5 | 6.5 | 4 | 6 | 31.5 | 69 | 81 | 93 | 6 | 6.5 | 48.0 | 5 | 12 | 5 | 12 | 0 |
| 14 FT | 13 | 14 | 8 | 8 | 5 | 6.5 | 5 | 8.5 | 31.6 | 29.0 | 29.0 | 33.0 | 6 | 15 | 48.5 | 6 | 15 | 31.0 | 5 | 6 | 5 | 9 | 30.8 | 70 | 82 | 94 | 6 | 6 | 47.5 | 5 | 12 | 5 | 12 | 0 |
| 16 FT | 14 | 15 | 8 | 8 | 5 | 6 | 5 | 8.5 | 30.8 | 30.0 | 30.0 | 34.0 | 6 | 14 | 48.0 | 6 | 14 | 31.0 | 5 | 6 | 5 | 8.5 | 30.1 | 71 | 83 | 95 | 6 | 6 | 47.5 | 5 | 12 | 5 | 12 | 0 |
| 18 FT | 15 | 16 | 8 | 8 | 6 | 8 | 5 | 8 | 35.1 | 31.0 | 31.0 | 35.0 | 6 | 14 | 53.5 | 6 | 14 | 36.5 | 6 | 8 | 5 | 8 | 29.9 | 72 | 84 | 96 | 6 | 6 | 47.5 | 5 | 12 | 5 | 12 | 0 |
| 20 FT | 15 | 17 | 8 | 8 | 6 | 7.5 | 5 | 8 | 35.1 | 31.0 | 31.0 | 35.0 | 6 | 13 | 53.5 | 6 | 13 | 36.5 | 6 | 8 | 5 | 7 | 29.4 | 73 | 85 | 97 | 6 | 6 | 47.5 | 5 | 12 | 5 | 12 | 0 |
| 22 FT | 16 | 18 | 8 | 8 | 6 | 8 | 5 | 7 | 33.4 | 32.0 | 36.0 | 36.0 | 6 | 13 | 52.5 | 6 | 13 | 36.5 | 6 | 8 | 5 | 6.5 | 28.0 | 74 | 86 | 98 | 6 | 6.5 | 47.5 | 5 | 12 | 5 | 12 | 0 |
| 24 FT | 17 | 19 | 8 | 8 | 6 | 7.5 | 5 | 6.5 | 33.3 | 37.0 | 37.0 | 37.0 | 6 | 13 | 52.5 | 6 | 13 | 36.5 | 6 | 8 | 5 | 6.5 | 28.0 | 75 | 87 | 99 | 6 | 6 | 47.5 | 5 | 12 | 5 | 12 | 0 |
| 26 FT | 18 | 20 | 8 | 8 | 6 | 7 | 5 | 6.5 | 33.1 | 38.0 | 38.0 | 38.0 | 6 | 13 | 52.0 | 6 | 13 | 36.5 | 6 | 8 | 5 | 6 | 28.1 | 76 | 88 | 100 | 6 | 6 | 47.5 | 5 | 12 | 5 | 10.5 | 0 |
| 28 FT | 19 | 21 | 8 | 8 | 6 | 7 | 5 | 6 | 33.1 | 39.0 | 39.0 | 39.0 | 6 | 13 | 52.0 | 6 | 13 | 36.0 | 6 | 7.5 | 6 | 7.5 | 31.3 | 77 | 89 | 101 | 7 | 7.5 | 50.5 | 5 | 12 | 5 | 9.5 | 0 |
| 30 FT | 20 | 22 | 8 | 8 | 6 | 7 | 6 | 7.5 | 37.1 | 44.0 | 44.0 | 44.0 | 6 | 12 | 51.5 | 6 | 12 | 35.5 | 6 | 7.5 | 6 | 7 | 31.4 | 78 | 90 | 102 | 7 | 7.5 | 50.5 | 5 | 12 | 5 | 9.5 | 0 |
| 32 FT | 21 | 23 | 8 | 8 | 6 | 6.5 | 6 | 7 | 37.1 | 45.0 | 45.0 | 45.0 | 6 | 12 | 51.0 | 6 | 12 | 34.5 | 6 | 7.5 | 6 | 6.5 | 31.5 | 79 | 91 | 103 | 7 | 7 | 50.5 | 5 | 12 | 5 | 9.5 | 0 |
| 34 FT | 22 | 23 | 8 | 8 | 6 | 6.5 | 6 | 6.5 | 37.0 | 46.0 | 46.0 | 46.0 | 7 | 15 | 55.5 | 7 | 15 | 38.5 | 6 | 6.5 | 6 | 6.5 | 31.6 | 79 | 91 | 103 | 7 | 7 | 50.5 | 5 | 12 | 5 | 9.5 | 0 |
| 36 FT | 22 | 24 | 8 | 8 | 6 | 6 | 6 | 6.5 | 37.1 | 46.0 | 46.0 | 46.0 | 7 | 15 | 55.5 | 7 | 15 | 39.5 | 6 | 7 | 6 | 6 | 31.6 | 80 | 92 | 104 | 7 | 7 | 50.0 | 5 | 12 | 5 | 9 | 0 |
| 38 FT | 23 | 25 | 8 | 8 | 6 | 6 | 6 | 6 | 37.1 | 47.0 | 47.0 | 47.0 | 7 | 15 | 55.0 | 7 | 15 | 38.5 | 6 | 7 | 6 | 6 | 31.9 | 81 | 93 | 105 | 7 | 6.5 | 50.0 | 5 | 12 | 5 | 8.5 | 0 |
| 40 FT | 24 | 26 | 9 | 8 | 6 | 6 | 6 | 7 | 38.0 | 48.0 | 48.0 | 48.0 | 7 | 14 | 54.0 | 7 | 14 | 37.5 | 6 | 7 | 6 | 6.5 | 32.5 | 82 | 94 | 106 | 7 | 6.5 | 50.0 | 5 | 12 | 5 | 8.5 | 0 |
| 42 FT | 25 | 27 | 9 | 8 | 6 | 6 | 6 | 6.5 | 38.0 | 49.0 | 49.0 | 49.0 | 7 | 14 | 53.5 | 7 | 14 | 37.0 | 6 | 7 | 6 | 6.5 | 32.6 | 83 | 95 | 107 | 7 | 6 | 50.0 | 5 | 12 | 5 | 8.5 | 0 |
| 44 FT | 25 | 28 | 9 | 8 | 7 | 7.5 | 6 | 6.5 | 38.1 | 49.0 | 49.0 | 49.0 | 7 | 14 | 53.0 | 7 | 14 | 37.5 | 6 | 6.5 | 6 | 6 | 32.8 | 84 | 96 | 108 | 7 | 6 | 50.0 | 5 | 12 | 5 | 8.5 | 0 |
| 46 FT | 26 | 28 | 9 | 8 | 7 | 7.5 | 6 | 6.5 | 38.1 | 50.0 | 50.0 | 50.0 | 7 | 13 | 52.5 | 7 | 13 | 36.5 | 6 | 6.5 | 6 | 6 | 32.9 | 84 | 96 | 108 | 7 | 6 | 50.0 | 5 | 12 | 5 | 8 | 0 |
| 48 FT | 27 | 29 | 9 | 8 | 7 | 7.5 | 6 | 6 | 38.1 | 51.0 | 51.0 | 51.0 | 7 | 14 | 51.5 | 7 | 14 | 36.5 | 6 | 6.5 | 6 | 6 | 33.0 | 85 | 97 | 109 | 7 | 6 | 50.0 | 5 | 12 | 5 | 7.5 | 0 |
| 50 FT | 27 | 30 | 10 | 8 | 7 | 7 | 6 | 7 | 39.0 | 51.0 | 51.0 | 51.0 | 7 | 13 | 51.5 | 7 | 13 | 36.0 | 6 | 6.5 | 6 | 6.5 | 33.5 | 86 | 98 | 110 | 7 | 6 | 50.0 | 5 | 12 | 5 | 8 | 0 |

## SPAN (S) = 10 FT  HEIGHT (HT) = 8 FT OR 9 FT OR 10 FT

| DESIGN FILL | MEMBER THICKNESS | | | | TOP SLAB BARS | | | | | | | | | | | | | BOTTOM SLAB BARS | | | | | | | | | | | | WALL BARS | | | | |
|---|---|---|---|---|---|---|---|---|---|---|---|---|---|---|---|---|---|---|---|---|---|---|---|---|---|---|---|---|---|---|---|---|---|---|
| | | | | | A1 BARS | | J3 BARS | | | | | | H1 BARS | | | H2 BARS | | | A2 BARS | | J4 BARS | | | | | H3 BARS | | | B1 BARS | | B2 BARS | | |
| | | | | | | | | | | K2 | | | | | | | | | | | | K3 | | | | | | | | | | |
| | TS | BS | TX | TI | SIZE | SPA. | SIZE | SPA. | C1 | HT=8′ | HT=9′ | HT=10′ | SIZE | SPA. | C5 | SIZE | SPA. | C6 | SIZE | SPA. | SIZE | SPA. | C4 | HT=8′ | HT=9′ | HT=10′ | SIZE | SPA. | C7 | SIZE | SPA. | SIZE | SPA. | G1 |
| 1 FT | 13 | 10 | 8 | 8 | 5 | 6.5 | 5 | 8.5 | 50.9 | 29.0 | 33.0 | 33.0 | 5 | 14 | 100.0 | 5 | 14 | 29.5 | 5 | 8.5 | 6 | 7.5 | 71.6 | 102 | 114 | 126 | 5 | 6 | 47.5 | 5 | 12 | 5 | 12 | 12 |
| 2 FT | 13 | 11 | 8 | 8 | 5 | 6.5 | 5 | 8.5 | 50.9 | 29.0 | 33.0 | 33.0 | 5 | 13 | 100.0 | 5 | 13 | 28.5 | 5 | 8.5 | 5 | 6 | 64.1 | 103 | 115 | 127 | 5 | 6 | 47.0 | 5 | 12 | 5 | 12 | 12 |
| 4 FT | 9 | 10 | 9 | 8 | 5 | 7.5 | 5 | 6 | 69.0 | 25.0 | 25.0 | 29.0 | 5 | 12 | 73.0 | 5 | 12 | 30.0 | 5 | 7.5 | 5 | 6 | 55.4 | 102 | 114 | 126 | 6 | 6.5 | 49.5 | 5 | 10 | 5 | 12 | 12 |
| 6 FT | 9 | 10 | 9 | 8 | 5 | 8.5 | 5 | 6 | 51.4 | 25.0 | 29.0 | 29.0 | 6 | 15 | 54.0 | 6 | 15 | 32.0 | 5 | 7 | 6 | 7 | 53.4 | 102 | 114 | 126 | 6 | 6 | 48.5 | 5 | 12 | 5 | 12 | 12 |
| 8 FT | 10 | 11 | 9 | 8 | 5 | 8 | 5 | 6 | 48.0 | 26.0 | 30.0 | 30.0 | 5 | 12 | 48.0 | 5 | 12 | 28.5 | 5 | 7 | 6 | 7.5 | 50.9 | 103 | 115 | 127 | 6 | 6 | 48.0 | 5 | 12 | 5 | 11.5 | 0 |
| 10 FT | 11 | 12 | 9 | 8 | 5 | 7.5 | 5 | 6 | 46.0 | 31.0 | 31.0 | 31.0 | 6 | 16 | 49.5 | 6 | 16 | 31.0 | 5 | 6.5 | 5 | 6 | 46.3 | 104 | 116 | 128 | 6 | 6 | 48.0 | 5 | 12 | 5 | 10.5 | 0 |
| 12 FT | 12 | 13 | 9 | 8 | 5 | 7 | 5 | 6 | 44.5 | 32.0 | 32.0 | 32.0 | 6 | 15 | 48.5 | 6 | 15 | 31.0 | 5 | 6.5 | 5 | 6 | 45.0 | 105 | 117 | 129 | 6 | 6 | 47.5 | 5 | 12 | 5 | 9.5 | 0 |
| 14 FT | 13 | 14 | 9 | 8 | 5 | 6.5 | 5 | 6 | 43.3 | 33.0 | 33.0 | 33.0 | 6 | 15 | 48.0 | 6 | 15 | 30.5 | 5 | 6 | 5 | 6 | 43.9 | 106 | 118 | 130 | 6 | 6 | 47.5 | 5 | 12 | 5 | 8.5 | 0 |
| 16 FT | 14 | 15 | 9 | 8 | 5 | 6 | 5 | 6 | 42.1 | 34.0 | 34.0 | 34.0 | 6 | 15 | 47.5 | 6 | 15 | 30.5 | 5 | 6 | 5 | 6 | 43.0 | 107 | 119 | 131 | 6 | 6 | 47.5 | 5 | 12 | 5 | 8.5 | 0 |
| 18 FT | 15 | 16 | 10 | 8 | 6 | 8.5 | 5 | 6.5 | 47.1 | 35.0 | 35.0 | 35.0 | 6 | 15 | 53.0 | 6 | 15 | 36.5 | 6 | 8 | 5 | 7 | 42.8 | 108 | 120 | 132 | 6 | 6 | 47.5 | 5 | 12 | 5 | 8.5 | 0 |
| 20 FT | 15 | 17 | 10 | 8 | 6 | 8 | 6 | 8 | 50.6 | 35.0 | 35.0 | 35.0 | 6 | 13 | 52.5 | 6 | 13 | 36.5 | 6 | 8 | 5 | 6.5 | 42.3 | 109 | 121 | 133 | 6 | 6 | 47.5 | 5 | 12 | 5 | 8 | 0 |
| 22 FT | 16 | 18 | 10 | 8 | 6 | 8 | 5 | 6 | 44.5 | 36.0 | 36.0 | 36.0 | 6 | 14 | 52.0 | 6 | 14 | 36.0 | 6 | 8 | 5 | 7 | 40.0 | 110 | 122 | 134 | 6 | 6.5 | 47.5 | 5 | 12 | 5 | 8 | 0 |
| 24 FT | 17 | 19 | 10 | 8 | 6 | 7.5 | 6 | 8 | 48.4 | 37.0 | 37.0 | 37.0 | 6 | 14 | 51.5 | 6 | 14 | 36.0 | 6 | 8 | 5 | 6.5 | 40.1 | 111 | 123 | 135 | 6 | 6 | 47.5 | 5 | 12 | 5 | 8 | 0 |
| 26 FT | 18 | 20 | 11 | 8 | 6 | 7.5 | 5 | 6 | 45.0 | 38.0 | 38.0 | 38.0 | 6 | 13 | 51.0 | 6 | 13 | 35.5 | 6 | 7.5 | 5 | 7 | 40.5 | 112 | 124 | 136 | 6 | 6 | 47.5 | 5 | 12 | 5 | 7.5 | 0 |
| 28 FT | 19 | 21 | 11 | 8 | 6 | 7 | 6 | 8 | 49.0 | 39.0 | 39.0 | 39.0 | 6 | 13 | 50.5 | 6 | 13 | 35.0 | 6 | 7.5 | 5 | 7 | 40.5 | 113 | 125 | 137 | 7 | 7.5 | 50.5 | 5 | 12 | 5 | 7.5 | 0 |
| 30 FT | 19 | 22 | 12 | 8 | 6 | 6.5 | 6 | 8 | 49.8 | 39.0 | 39.0 | 39.0 | 6 | 13 | 50.0 | 6 | 13 | 35.5 | 6 | 7.5 | 5 | 6.5 | 40.9 | 114 | 126 | 138 | 7 | 7.5 | 50.5 | 5 | 12 | 5 | 7.5 | 0 |
| 32 FT | 20 | 23 | 12 | 8 | 6 | 6.5 | 6 | 8 | 49.6 | 40.0 | 40.0 | 40.0 | 6 | 12 | 49.5 | 6 | 12 | 34.5 | 6 | 7.5 | 5 | 6.5 | 41.0 | 115 | 127 | 139 | 7 | 7 | 50.5 | 5 | 12 | 5 | 7 | 0 |
| 34 FT | 21 | 24 | 12 | 8 | 6 | 6.5 | 6 | 7.5 | 49.6 | 41.0 | 41.0 | 41.0 | 6 | 12 | 49.0 | 6 | 12 | 33.5 | 6 | 7.5 | 5 | 6.5 | 41.1 | 116 | 128 | 140 | 7 | 7 | 50.5 | 5 | 12 | 5 | 7 | 0 |
| 36 FT | 22 | 25 | 12 | 8 | 6 | 6.5 | 6 | 6.5 | 49.6 | 42.0 | 42.0 | 42.0 | 7 | 15 | 53.0 | 7 | 15 | 38.0 | 6 | 7 | 5 | 6.5 | 41.3 | 117 | 129 | 141 | 7 | 6.5 | 50.5 | 5 | 12 | 5 | 7 | 0 |
| 38 FT | 23 | 26 | 13 | 8 | 6 | 6 | 6 | 7.5 | 50.4 | 43.0 | 43.0 | 43.0 | 7 | 15 | 52.0 | 7 | 15 | 37.0 | 6 | 7 | 5 | 6 | 41.8 | 118 | 130 | 142 | 7 | 6.5 | 50.5 | 5 | 12 | 5 | 6.5 | 0 |
| 40 FT | 23 | 26 | 13 | 8 | 6 | 6 | 6 | 7 | 50.3 | 43.0 | 43.0 | 43.0 | 7 | 15 | 52.0 | 7 | 15 | 37.5 | 6 | 6.5 | 5 | 6 | 41.6 | 118 | 130 | 142 | 7 | 6.5 | 50.5 | 5 | 12 | 5 | 6.5 | 0 |
| 42 FT | 24 | 27 | 14 | 8 | 6 | 6 | 6 | 7.5 | 51.0 | 44.0 | 44.0 | 44.0 | 7 | 14 | 51.5 | 7 | 14 | 36.5 | 6 | 6.5 | 5 | 6 | 42.1 | 119 | 131 | 143 | 7 | 6 | 50.5 | 5 | 12 | 5 | 6 | 0 |
| 44 FT | 24 | 28 | 14 | 8 | 7 | 7 | 6 | 7 | 51.1 | 44.0 | 44.0 | 44.0 | 7 | 14 | 51.5 | 7 | 14 | 37.0 | 6 | 6.5 | 5 | 6 | 42.1 | 120 | 132 | 144 | 7 | 6 | 50.5 | 5 | 12 | 5 | 6 | 0 |
| 46 FT | 25 | 29 | 14 | 8 | 7 | 7.5 | 6 | 6.5 | 51.1 | 45.0 | 49.0 | 49.0 | 7 | 14 | 51.0 | 7 | 14 | 36.0 | 6 | 6.5 | 6 | 8.5 | 45.4 | 121 | 133 | 145 | 7 | 6 | 50.5 | 5 | 12 | 5 | 6 | 0 |
| 48 FT | 26 | 30 | 14 | 8 | 7 | 7 | 6 | 6 | 51.1 | 46.0 | 50.0 | 50.0 | 7 | 15 | 50.5 | 7 | 15 | 36.0 | 6 | 6.5 | 6 | 8 | 45.6 | 122 | 134 | 146 | 7 | 6 | 50.5 | 5 | 12 | 5 | 6 | 0 |
| 50 FT | 26 | 30 | 15 | 8 | 7 | 7 | 6 | 6.5 | 51.9 | 50.0 | 50.0 | 50.0 | 7 | 14 | 50.5 | 7 | 14 | 36.0 | 6 | 6 | 6 | 8 | 45.8 | 122 | 134 | 146 | 8 | 7.5 | 56.5 | 5 | 12 | 6 | 8 | 0 |

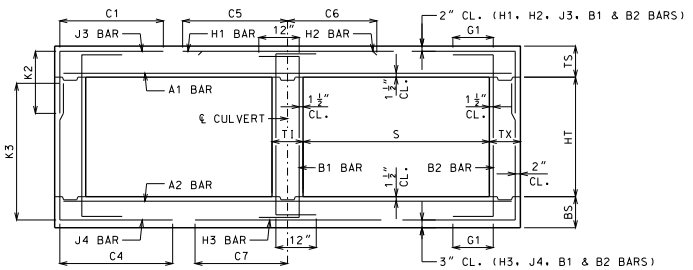


BAR DIMENSIONS DIAGRAM
SYMMETRICAL ABOUT ℄ CULVERT.

GENERAL NOTES:

IF DESIGN FILL IS BETWEEN TABULATED DESIGN FILLS, USE THE NEXT GREATER TABULATED DESIGN FILL, EXCEPT FOR DESIGN FILLS BETWEEN 2 FEET AND 4 FEET. FOR DESIGN FILLS BETWEEN 2 FEET AND 4 FEET USE THE GREATER MEMBER THICKNESS, AREA OF REINFORCEMENT AND BAR DIMENSIONS FROM THE 2 FEET AND 4 FEET TABULATED DESIGN FILLS. AREA OF REINFORCEMENT EQUALS BAR AREA PER FOOT SPACING.

SPECIAL DESIGNS ARE REQUIRED WHEN THE DESIGN FILL IS LESS THAN 1 FOOT OR GREATER THAN 50 FEET.

DIMENSIONS ARE IN INCHES UNLESS OTHERWISE SPECIFIED.

DESIGN FILLS ARE MEASURED FROM THE TOP OF TOP SLAB TO THE TOP OF EARTH FILL OR ROADWAY.

CULVERTS MEET STRENGTH AND SERVICEABILITY REQUIREMENTS FOR THE DESIGN VEHICULAR LIVE LOAD HL-93 MINUS THE LANE LOAD.


MISSOURI HIGHWAYS AND TRANSPORTATION COMMISSION
105 WEST CAPITOL
JEFFERSON CITY, MO 65102
1-888-ASK-MODOT (1-888-275-6636)


STATE OF MISSOURI
DENNIS W. HECKMANN
NUMBER PE-27141
PROFESSIONAL ENGINEER
THIS SHEET HAS BEEN SIGNED, SEALED AND DATED ELECTRONICALLY.

# CONCRETE DOUBLE BOX CULVERT

MEMBER THICKNESS
BAR SIZE, SPACING & DIMENSIONS

SPAN (S): 10 FEET
HEIGHT (HT): 5 THRU 10 FEET

DATE EFFECTIVE: 10/01/2011
DATE PREPARED: 9/8/2011

703.47

SHEET NO.
14 OF 27

IF A SEAL IS PRESENT ON THIS SHEET IT HAS BEEN ELECTRONICALLY SEALED AND DATED.

SPAN (S) = 10 FT  HEIGHT (HT) = 11 FT OR 12 FT OR 13 FT

| DESIGN FILL | MEMBER THICKNESS | | | | TOP SLAB BARS | | | | | | | | | | | | | | BOTTOM SLAB BARS | | | | | | | | | | | | | | WALL BARS | | | | |
|---|---|---|---|---|---|---|---|---|---|---|---|---|---|---|---|---|---|---|---|---|---|---|---|---|---|---|---|---|---|---|---|---|---|---|---|---|---|
| | | | | | A1 BARS | | J3 BARS | | | | | | H1 BARS | | | H2 BARS | | | A2 BARS | | J4 BARS | | | | | | H3 BARS | | | B1 BARS | | B2 BARS | | |
| | | | | | | | | | | K2 | | | | | | | | | | | | | K3 | | | | | | | | | | | |
| | TS | BS | TX | TI | SIZE | SPA. | SIZE | SPA. | C1 | HT=11' | HT=12' | HT=13' | SIZE | SPA. | C5 | SIZE | SPA. | C6 | SIZE | SPA. | SIZE | SPA. | C4 | HT=11' | HT=12' | HT=13' | SIZE | SPA. | C7 | SIZE | SPA. | SIZE | SPA. | G1 |
| 1 FT | 13 | 10 | 9 | 10 | 5 | 6.5 | 5 | 6.5 | 51.9 | 33.0 | 33.0 | 33.0 | 5 | 14 | 101.0 | 5 | 14 | 30.0 | 5 | 7.5 | 6 | 6 | 85.4 | 138 | 150 | 162 | 6 | 7 | 51.0 | 5 | 12 | 5 | 8.5 | 12 |
| 2 FT | 13 | 11 | 9 | 10 | 5 | 6.5 | 5 | 6 | 51.9 | 33.0 | 33.0 | 33.0 | 5 | 13 | 101.0 | 5 | 13 | 29.0 | 5 | 8 | 6 | 6 | 82.6 | 139 | 151 | 163 | 6 | 6 | 47.5 | 5 | 12 | 5 | 8.5 | 12 |
| 4 FT | 9 | 10 | 10 | 10 | 5 | 7.5 | 6 | 7 | 52.5 | 29.0 | 29.0 | 33.0 | 5 | 12 | 101.5 | 5 | 12 | 30.5 | 5 | 7 | 6 | 6 | 74.5 | 138 | 150 | 162 | 6 | 6 | 50.0 | 5 | 10 | 5 | 8 | 12 |
| 6 FT | 9 | 11 | 10 | 10 | 5 | 8.5 | 6 | 7 | 70.4 | 29.0 | 29.0 | 33.0 | 5 | 12 | 50.5 | 5 | 12 | 29.5 | 5 | 7 | 6 | 6 | 71.0 | 139 | 151 | 163 | 6 | 6.5 | 49.5 | 5 | 12 | 5 | 8 | 12 |
| 8 FT | 10 | 12 | 11 | 10 | 5 | 8 | 5 | 6 | 62.6 | 30.0 | 30.0 | 30.0 | 5 | 12 | 47.5 | 5 | 12 | 29.0 | 5 | 7 | 5 | 6 | 64.6 | 140 | 152 | 164 | 6 | 6.5 | 48.5 | 5 | 12 | 5 | 7.5 | 0 |
| 10 FT | 11 | 12 | 11 | 10 | 5 | 7.5 | 5 | 6.5 | 60.9 | 31.0 | 31.0 | 31.0 | 5 | 12 | 46.5 | 5 | 12 | 28.5 | 5 | 6.5 | 6 | 6.5 | 64.4 | 140 | 152 | 164 | 6 | 6 | 48.0 | 5 | 12 | 5 | 7.5 | 0 |
| 12 FT | 11 | 13 | 11 | 10 | 5 | 7.5 | 6 | 7.5 | 60.6 | 31.0 | 31.0 | 35.0 | 6 | 15 | 48.5 | 6 | 15 | 31.5 | 5 | 6 | 6 | 6.5 | 63.6 | 141 | 153 | 165 | 6 | 6 | 48.0 | 5 | 12 | 5 | 7.5 | 0 |
| 14 FT | 12 | 14 | 11 | 10 | 5 | 7 | 6 | 7.5 | 59.6 | 32.0 | 32.0 | 36.0 | 6 | 14 | 48.0 | 6 | 14 | 31.5 | 5 | 6 | 6 | 6.5 | 62.5 | 142 | 154 | 166 | 6 | 6 | 48.0 | 5 | 12 | 5 | 7.5 | 0 |
| 16 FT | 13 | 15 | 12 | 10 | 5 | 6.5 | 6 | 7.5 | 58.4 | 33.0 | 33.0 | 37.0 | 6 | 14 | 47.5 | 6 | 14 | 31.0 | 6 | 8 | 6 | 7 | 61.1 | 143 | 155 | 167 | 6 | 6 | 48.0 | 5 | 12 | 5 | 7 | 0 |
| 18 FT | 14 | 16 | 12 | 10 | 5 | 6 | 6 | 7 | 58.0 | 34.0 | 38.0 | 38.0 | 6 | 14 | 47.0 | 6 | 14 | 31.0 | 6 | 8 | 6 | 6.5 | 60.5 | 144 | 156 | 168 | 6 | 6.5 | 48.0 | 5 | 12 | 5 | 7 | 0 |
| 20 FT | 15 | 17 | 13 | 10 | 6 | 8 | 6 | 7 | 64.0 | 35.0 | 39.0 | 39.0 | 6 | 14 | 52.5 | 6 | 14 | 37.0 | 6 | 8 | 6 | 6.5 | 59.9 | 145 | 157 | 169 | 6 | 6.5 | 48.0 | 5 | 12 | 5 | 6.5 | 0 |
| 22 FT | 15 | 18 | 13 | 10 | 6 | 7.5 | 6 | 7 | 61.1 | 35.0 | 35.0 | 39.0 | 6 | 13 | 52.0 | 6 | 13 | 37.0 | 6 | 8 | 6 | 7.5 | 57.4 | 146 | 158 | 170 | 6 | 6.5 | 48.0 | 5 | 12 | 5 | 6.5 | 0 |
| 24 FT | 16 | 19 | 13 | 10 | 6 | 7.5 | 6 | 6.5 | 61.3 | 36.0 | 36.0 | 40.0 | 6 | 13 | 51.5 | 6 | 13 | 36.5 | 6 | 7.5 | 6 | 7.5 | 57.4 | 147 | 159 | 171 | 6 | 6 | 48.0 | 5 | 12 | 5 | 6.5 | 0 |
| 26 FT | 17 | 20 | 14 | 10 | 6 | 7.5 | 6 | 7 | 61.8 | 37.0 | 37.0 | 41.0 | 6 | 13 | 51.5 | 6 | 13 | 36.5 | 6 | 7.5 | 6 | 7.5 | 57.6 | 148 | 160 | 172 | 6 | 6 | 48.0 | 5 | 12 | 5 | 6 | 0 |
| 28 FT | 18 | 21 | 14 | 10 | 6 | 7 | 6 | 6.5 | 61.9 | 38.0 | 38.0 | 42.0 | 6 | 13 | 51.0 | 6 | 13 | 36.5 | 6 | 7.5 | 6 | 7.5 | 57.8 | 149 | 161 | 173 | 7 | 7.5 | 51.0 | 5 | 12 | 5 | 6 | 0 |
| 30 FT | 19 | 22 | 15 | 10 | 6 | 7 | 6 | 6.5 | 62.4 | 39.0 | 43.0 | 43.0 | 6 | 13 | 50.0 | 6 | 13 | 35.5 | 6 | 7.5 | 6 | 7.5 | 58.0 | 150 | 162 | 174 | 7 | 7.5 | 51.0 | 5 | 12 | 6 | 8 | 0 |
| 32 FT | 20 | 23 | 15 | 10 | 6 | 7 | 6 | 6 | 62.5 | 44.0 | 44.0 | 44.0 | 6 | 12 | 49.5 | 6 | 12 | 34.5 | 6 | 7 | 6 | 7.5 | 58.1 | 151 | 163 | 175 | 7 | 7 | 51.0 | 5 | 12 | 6 | 8 | 0 |
| 34 FT | 21 | 24 | 16 | 10 | 6 | 6.5 | 6 | 6.5 | 63.0 | 41.0 | 45.0 | 45.0 | 6 | 12 | 48.5 | 6 | 12 | 33.5 | 6 | 7 | 6 | 7.5 | 58.5 | 152 | 164 | 176 | 7 | 7 | 51.0 | 5 | 12 | 6 | 8 | 0 |
| 36 FT | 21 | 25 | 16 | 10 | 6 | 6 | 6 | 6 | 62.9 | 45.0 | 45.0 | 45.0 | 6 | 12 | 48.5 | 6 | 12 | 34.0 | 6 | 7 | 6 | 7.5 | 58.6 | 153 | 165 | 177 | 7 | 6.5 | 51.0 | 5 | 12 | 6 | 8 | 0 |
| 38 FT | 22 | 26 | 17 | 10 | 6 | 6.5 | 6 | 6 | 63.5 | 42.0 | 46.0 | 46.0 | 7 | 15 | 52.5 | 7 | 15 | 38.5 | 6 | 7 | 6 | 7 | 59.0 | 154 | 166 | 178 | 7 | 6.5 | 51.0 | 5 | 12 | 6 | 7.5 | 0 |
| 40 FT | 23 | 26 | 17 | 10 | 6 | 6 | 6 | 6 | 63.5 | 47.0 | 47.0 | 47.0 | 7 | 15 | 52.0 | 7 | 15 | 37.5 | 6 | 6 | 6 | 7 | 58.9 | 154 | 166 | 178 | 7 | 6.5 | 51.0 | 5 | 12 | 6 | 7.5 | 0 |
| 42 FT | 24 | 27 | 18 | 10 | 6 | 6 | 6 | 6 | 64.1 | 44.0 | 48.0 | 48.0 | 7 | 15 | 51.5 | 7 | 15 | 37.0 | 6 | 6.5 | 6 | 6.5 | 59.3 | 155 | 167 | 179 | 7 | 6 | 51.0 | 5 | 12 | 6 | 7 | 0 |
| 44 FT | 24 | 28 | 19 | 10 | 7 | 8 | 6 | 6 | 64.6 | 44.0 | 48.0 | 48.0 | 7 | 14 | 51.5 | 7 | 14 | 37.0 | 6 | 6.5 | 6 | 6.5 | 59.6 | 156 | 168 | 180 | 7 | 6 | 51.0 | 5 | 12 | 6 | 7 | 0 |
| 46 FT | 25 | 29 | 19 | 10 | 7 | 7.5 | 6 | 6 | 64.8 | 49.0 | 49.0 | 49.0 | 7 | 15 | 51.0 | 7 | 15 | 36.5 | 6 | 6.5 | 6 | 6.5 | 59.9 | 157 | 169 | 181 | 7 | 6 | 51.0 | 5 | 12 | 6 | 6.5 | 0 |
| 48 FT | 25 | 30 | 20 | 10 | 7 | 7.5 | 7 | 8 | 70.3 | 49.0 | 49.0 | 49.0 | 7 | 15 | 51.0 | 7 | 15 | 36.5 | 6 | 6.5 | 6 | 6.5 | 60.3 | 158 | 170 | 182 | 7 | 6 | 51.0 | 5 | 12 | 6 | 6.5 | 0 |
| 50 FT | 26 | 31 | 20 | 10 | 7 | 7 | 7 | 7 | 70.4 | 50.0 | 50.0 | 50.0 | 7 | 15 | 50.5 | 7 | 15 | 36.5 | 6 | 6 | 6 | 6 | 60.5 | 159 | 171 | 183 | 7 | 6 | 51.0 | 5 | 12 | 6 | 6.5 | 0 |

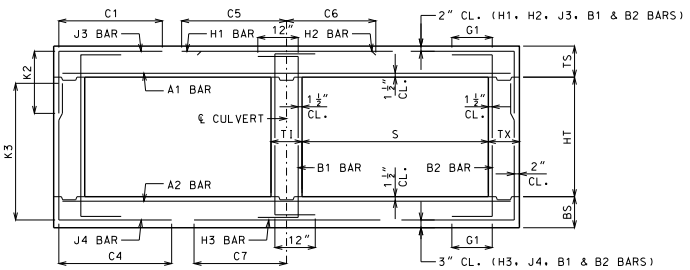


BAR DIMENSIONS DIAGRAM
SYMMETRICAL ABOUT ℄ CULVERT.

GENERAL NOTES:

IF DESIGN FILL IS BETWEEN TABULATED DESIGN FILLS, USE THE NEXT GREATER TABULATED DESIGN FILL, EXCEPT FOR DESIGN FILLS BETWEEN 2 FEET AND 4 FEET. FOR DESIGN FILLS BETWEEN 2 FEET AND 4 FEET USE THE GREATER MEMBER THICKNESS, AREA OF REINFORCEMENT AND BAR DIMENSIONS FROM THE 2 FEET AND 4 FEET TABULATED DESIGN FILLS. AREA OF REINFORCEMENT EQUALS BAR AREA PER FOOT SPACING.

SPECIAL DESIGNS ARE REQUIRED WHEN THE DESIGN FILL IS LESS THAN 1 FOOT OR GREATER THAN 50 FEET.

DIMENSIONS ARE IN INCHES UNLESS OTHERWISE SPECIFIED.

DESIGN FILLS ARE MEASURED FROM THE TOP OF TOP SLAB TO THE TOP OF EARTH FILL OR ROADWAY.

CULVERTS MEET STRENGTH AND SERVICEABILITY REQUIREMENTS FOR THE DESIGN VEHICULAR LIVE LOAD HL-93 MINUS THE LANE LOAD.


MISSOURI HIGHWAYS AND TRANSPORTATION COMMISSION
105 WEST CAPITOL
JEFFERSON CITY, MO 65102
1-888-ASK-MODOT (1-888-275-6636)


STATE OF MISSOURI
DENNIS W. HECKMANN
NUMBER PE-27141
PROFESSIONAL ENGINEER
THIS SHEET HAS BEEN SIGNED, SEALED AND DATED ELECTRONICALLY.

# CONCRETE DOUBLE BOX CULVERT

MEMBER THICKNESS
BAR SIZE, SPACING & DIMENSIONS

SPAN (S): 10 FEET
HEIGHT (HT): 11 THRU 13 FEET

DATE EFFECTIVE: 10/01/2011
DATE PREPARED: 9/8/2011

703.47

SHEET NO.
15 OF 27

IF A SEAL IS PRESENT ON THIS SHEET IT HAS BEEN ELECTRONICALLY SEALED AND DATED.

SPAN (S) = 11 FT  HEIGHT (HT) = 6 FT OR 7 FT OR 8 FT

| DESIGN FILL | MEMBER THICKNESS | | | | TOP SLAB BARS | | | | | | | | | | | | BOTTOM SLAB BARS | | | | | | | | | | WALL BARS | | | | |
|---|---|---|---|---|---|---|---|---|---|---|---|---|---|---|---|---|---|---|---|---|---|---|---|---|---|---|---|---|---|---|---|
| | | | | | A1 BARS | | J3 BARS | | | K2 | | | H1 BARS | | | H2 BARS | | | A2 BARS | | J4 BARS | | | K3 | | | H3 BARS | | | B1 BARS | | B2 BARS | |
| | TS | BS | TX | TI | SIZE | SPA. | SIZE | SPA. | C1 | HT=6′ | HT=7′ | HT=8′ | SIZE | SPA. | C5 | SIZE | SPA. | C6 | SIZE | SPA. | SIZE | SPA. | C4 | HT=6′ | HT=7′ | HT=8′ | SIZE | SPA. | C7 | SIZE | SPA. | SIZE | SPA. | G1 |
| 1 FT | 14 | 10 | 8 | 8 | 5 | 6 | 4 | 6.5 | 52.5 | 30.0 | 30.0 | 30.0 | 5 | 13 | 106.5 | 5 | 13 | 30.0 | 5 | 8 | 5 | 7 | 52.9 | 78 | 90 | 102 | 6 | 7 | 53.5 | 5 | 12 | 5 | 12 | 12 |
| 2 FT | 14 | 11 | 8 | 8 | 5 | 6 | 4 | 6 | 52.5 | 30.0 | 30.0 | 30.0 | 5 | 12 | 106.5 | 5 | 12 | 29.0 | 5 | 8 | 5 | 8 | 49.1 | 79 | 91 | 103 | 6 | 7 | 53.0 | 5 | 12 | 5 | 12 | 12 |
| 4 FT | 10 | 10 | 8 | 8 | 5 | 7 | 5 | 6 | 45.6 | 26.0 | 26.0 | 30.0 | 6 | 16 | 72.5 | 6 | 16 | 35.0 | 5 | 7 | 5 | 6.5 | 43.0 | 78 | 90 | 102 | 6 | 6 | 52.5 | 5 | 10.5 | 5 | 12 | 12 |
| 6 FT | 10 | 11 | 8 | 8 | 5 | 7.5 | 5 | 6 | 40.8 | 26.0 | 26.0 | 30.0 | 6 | 15 | 58.5 | 6 | 15 | 33.5 | 5 | 6.5 | 5 | 7.5 | 39.5 | 79 | 91 | 103 | 6 | 6 | 52.0 | 5 | 12 | 5 | 12 | 12 |
| 8 FT | 11 | 12 | 8 | 8 | 5 | 7.5 | 5 | 7 | 38.6 | 27.0 | 27.0 | 31.0 | 6 | 15 | 54.5 | 6 | 15 | 33.0 | 5 | 6.5 | 5 | 8 | 37.3 | 80 | 92 | 104 | 6 | 6 | 51.5 | 5 | 12 | 5 | 12 | 0 |
| 10 FT | 12 | 13 | 8 | 8 | 5 | 7 | 5 | 7.5 | 36.6 | 28.0 | 28.0 | 32.0 | 6 | 14 | 53.0 | 6 | 14 | 32.5 | 5 | 6 | 5 | 8 | 35.6 | 81 | 93 | 105 | 6 | 6 | 51.0 | 5 | 12 | 5 | 12 | 0 |
| 12 FT | 13 | 14 | 8 | 8 | 5 | 6.5 | 5 | 7.5 | 35.3 | 29.0 | 33.0 | 33.0 | 6 | 14 | 52.0 | 6 | 14 | 32.5 | 6 | 8.5 | 5 | 8.5 | 34.6 | 82 | 94 | 106 | 6 | 6 | 51.0 | 5 | 12 | 5 | 12 | 0 |
| 14 FT | 14 | 15 | 8 | 8 | 5 | 6 | 5 | 8 | 34.1 | 30.0 | 34.0 | 34.0 | 6 | 13 | 51.5 | 6 | 13 | 32.0 | 6 | 8 | 5 | 8.5 | 33.8 | 83 | 95 | 107 | 6 | 6 | 51.0 | 5 | 12 | 5 | 12 | 0 |
| 16 FT | 15 | 16 | 8 | 8 | 6 | 8 | 5 | 7.5 | 38.3 | 31.0 | 35.0 | 35.0 | 6 | 13 | 57.0 | 6 | 13 | 38.0 | 6 | 7.5 | 5 | 8 | 33.1 | 84 | 96 | 108 | 6 | 6 | 51.0 | 5 | 12 | 5 | 12 | 0 |
| 18 FT | 16 | 17 | 8 | 8 | 6 | 8 | 5 | 7 | 37.5 | 32.0 | 36.0 | 36.0 | 6 | 12 | 56.5 | 6 | 12 | 38.0 | 6 | 7 | 5 | 7 | 32.6 | 85 | 97 | 109 | 7 | 7 | 53.5 | 5 | 12 | 5 | 10.5 | 0 |
| 20 FT | 17 | 18 | 8 | 8 | 6 | 7.5 | 5 | 6.5 | 37.1 | 37.0 | 37.0 | 37.0 | 6 | 12 | 56.5 | 6 | 12 | 38.0 | 6 | 7 | 5 | 6.5 | 32.4 | 86 | 98 | 110 | 7 | 7 | 53.5 | 5 | 12 | 5 | 9.5 | 0 |
| 22 FT | 18 | 20 | 8 | 8 | 6 | 7 | 5 | 6.5 | 37.1 | 38.0 | 38.0 | 38.0 | 6 | 12 | 56.0 | 6 | 12 | 37.5 | 6 | 7.5 | 5 | 6 | 32.4 | 88 | 100 | 112 | 6 | 6 | 50.5 | 5 | 12 | 5 | 9.5 | 0 |
| 24 FT | 19 | 20 | 8 | 8 | 6 | 6.5 | 5 | 6 | 35.1 | 39.0 | 39.0 | 39.0 | 6 | 12 | 55.0 | 6 | 12 | 37.5 | 6 | 7 | 5 | 6 | 30.9 | 88 | 100 | 112 | 6 | 6 | 50.5 | 5 | 12 | 5 | 9.5 | 0 |
| 26 FT | 20 | 21 | 8 | 8 | 6 | 6.5 | 6 | 7.5 | 39.1 | 44.0 | 44.0 | 44.0 | 6 | 12 | 54.5 | 6 | 12 | 37.5 | 6 | 6.5 | 6 | 7.5 | 33.9 | 89 | 101 | 113 | 7 | 7 | 53.5 | 5 | 12 | 5 | 9.5 | 0 |
| 28 FT | 21 | 22 | 8 | 8 | 6 | 6.5 | 6 | 7 | 39.1 | 45.0 | 45.0 | 45.0 | 6 | 12 | 54.5 | 6 | 12 | 37.0 | 6 | 6 | 6 | 7 | 34.0 | 90 | 102 | 114 | 7 | 7 | 53.5 | 5 | 12 | 5 | 9.5 | 0 |
| 30 FT | 22 | 23 | 8 | 8 | 6 | 6 | 6 | 6.5 | 39.1 | 46.0 | 46.0 | 46.0 | 7 | 15 | 59.0 | 7 | 15 | 41.0 | 6 | 6 | 6 | 6.5 | 34.1 | 91 | 103 | 115 | 7 | 7 | 53.5 | 5 | 12 | 5 | 8.5 | 0 |
| 32 FT | 23 | 24 | 8 | 8 | 6 | 6 | 6 | 6 | 39.1 | 47.0 | 47.0 | 47.0 | 7 | 15 | 58.5 | 7 | 15 | 40.5 | 6 | 6 | 6 | 6 | 34.3 | 92 | 104 | 116 | 7 | 7 | 53.5 | 5 | 12 | 5 | 8 | 0 |
| 34 FT | 23 | 26 | 9 | 8 | 7 | 7.5 | 6 | 7 | 40.3 | 47.0 | 47.0 | 47.0 | 7 | 15 | 58.0 | 7 | 15 | 41.0 | 6 | 6.5 | 6 | 6.5 | 34.8 | 94 | 106 | 118 | 7 | 6.5 | 53.5 | 5 | 12 | 5 | 8.5 | 0 |
| 36 FT | 24 | 27 | 9 | 8 | 7 | 7.5 | 6 | 7 | 40.3 | 48.0 | 48.0 | 48.0 | 7 | 14 | 57.5 | 7 | 14 | 40.5 | 6 | 6.5 | 6 | 6.5 | 34.9 | 95 | 107 | 119 | 7 | 6 | 53.5 | 5 | 12 | 5 | 8 | 0 |
| 38 FT | 25 | 27 | 9 | 8 | 7 | 7.5 | 6 | 6.5 | 40.1 | 49.0 | 49.0 | 49.0 | 7 | 14 | 57.0 | 7 | 14 | 39.5 | 6 | 6 | 6 | 6.5 | 35.0 | 95 | 107 | 119 | 7 | 6 | 53.5 | 5 | 12 | 5 | 7.5 | 0 |
| 40 FT | 26 | 28 | 10 | 8 | 7 | 7.5 | 6 | 7 | 40.9 | 50.0 | 50.0 | 50.0 | 7 | 13 | 56.0 | 7 | 13 | 38.5 | 6 | 6 | 6 | 7 | 35.5 | 96 | 108 | 120 | 7 | 6 | 53.5 | 5 | 12 | 5 | 8 | 0 |
| 42 FT | 27 | 29 | 10 | 8 | 7 | 7 | 6 | 7 | 41.0 | 51.0 | 51.0 | 51.0 | 7 | 13 | 55.0 | 7 | 13 | 37.5 | 6 | 6 | 6 | 6.5 | 35.8 | 97 | 109 | 121 | 8 | 7.5 | 59.5 | 5 | 12 | 5 | 8 | 0 |
| 44 FT | 27 | 30 | 11 | 8 | 7 | 6.5 | 5 | 6 | 37.9 | 47.0 | 47.0 | 47.0 | 7 | 13 | 54.5 | 7 | 13 | 38.0 | 6 | 6 | 6 | 7 | 36.1 | 98 | 110 | 122 | 8 | 7.5 | 59.5 | 5 | 12 | 5 | 7.5 | 0 |
| 46 FT | 28 | 31 | 11 | 8 | 7 | 6.5 | 6 | 7.5 | 41.9 | 52.0 | 52.0 | 52.0 | 7 | 12 | 54.0 | 7 | 12 | 37.5 | 6 | 6 | 6 | 7 | 36.4 | 99 | 111 | 123 | 8 | 7 | 59.5 | 5 | 12 | 5 | 7.5 | 0 |
| 48 FT | 29 | 32 | 11 | 8 | 7 | 6.5 | 6 | 7 | 41.9 | 53.0 | 53.0 | 53.0 | 7 | 12 | 53.5 | 7 | 12 | 37.0 | 6 | 6 | 6 | 6.5 | 36.5 | 100 | 112 | 124 | 8 | 7 | 59.0 | 5 | 12 | 5 | 7.5 | 0 |
| 50 FT | 29 | 33 | 11 | 8 | 7 | 6.5 | 6 | 7 | 42.0 | 53.0 | 53.0 | 53.0 | 7 | 12 | 53.5 | 7 | 12 | 37.0 | 6 | 6 | 6 | 6.5 | 36.6 | 101 | 113 | 125 | 8 | 7 | 59.0 | 5 | 12 | 5 | 7 | 0 |

SPAN (S) = 11 FT  HEIGHT (HT) = 9 FT OR 10 FT OR 11 FT

| DESIGN FILL | MEMBER THICKNESS | | | | TOP SLAB BARS | | | | | | | | | | | | BOTTOM SLAB BARS | | | | | | | | | | WALL BARS | | | | |
|---|---|---|---|---|---|---|---|---|---|---|---|---|---|---|---|---|---|---|---|---|---|---|---|---|---|---|---|---|---|---|---|
| | | | | | A1 BARS | | J3 BARS | | | K2 | | | H1 BARS | | | H2 BARS | | | A2 BARS | | J4 BARS | | | K3 | | | H3 BARS | | | B1 BARS | | B2 BARS | |
| | TS | BS | TX | TI | SIZE | SPA. | SIZE | SPA. | C1 | HT=9′ | HT=10′ | HT=11′ | SIZE | SPA. | C5 | SIZE | SPA. | C6 | SIZE | SPA. | SIZE | SPA. | C4 | HT=9′ | HT=10′ | HT=11′ | SIZE | SPA. | C7 | SIZE | SPA. | SIZE | SPA. | G1 |
| 1 FT | 14 | 10 | 8 | 9 | 5 | 6 | 5 | 8 | 54.6 | 34.0 | 34.0 | 34.0 | 5 | 13 | 109.0 | 5 | 13 | 30.5 | 5 | 7.5 | 6 | 6 | 76.4 | 114 | 126 | 138 | 6 | 6.5 | 54.0 | 5 | 12 | 5 | 10 | 12 |
| 2 FT | 14 | 11 | 8 | 9 | 5 | 6 | 5 | 8 | 54.6 | 34.0 | 34.0 | 34.0 | 5 | 12 | 109.0 | 5 | 12 | 29.5 | 5 | 7.5 | 6 | 6.5 | 71.8 | 115 | 127 | 139 | 6 | 7 | 53.5 | 5 | 12 | 5 | 10 | 12 |
| 4 FT | 10 | 10 | 9 | 9 | 5 | 7 | 5 | 6 | 82.4 | 30.0 | 30.0 | 30.0 | 6 | 16 | 84.0 | 6 | 16 | 35.0 | 5 | 7 | 6 | 6.5 | 62.1 | 114 | 126 | 138 | 7 | 7 | 55.5 | 5 | 10.5 | 5 | 10 | 12 |
| 6 FT | 10 | 11 | 9 | 9 | 5 | 7.5 | 5 | 6 | 56.3 | 30.0 | 30.0 | 30.0 | 6 | 15 | 58.5 | 6 | 15 | 33.5 | 5 | 6.5 | 6 | 6.5 | 58.1 | 115 | 127 | 139 | 6 | 6 | 52.0 | 5 | 12 | 5 | 9.5 | 12 |
| 8 FT | 11 | 12 | 10 | 9 | 5 | 7.5 | 5 | 6 | 52.4 | 31.0 | 31.0 | 31.0 | 6 | 15 | 54.5 | 6 | 15 | 33.0 | 5 | 6 | 5 | 6 | 52.1 | 116 | 128 | 140 | 6 | 6 | 51.5 | 5 | 12 | 5 | 10.5 | 0 |
| 10 FT | 11 | 13 | 10 | 9 | 5 | 7.5 | 5 | 6 | 49.6 | 31.0 | 31.0 | 31.0 | 6 | 14 | 52.5 | 6 | 14 | 32.5 | 5 | 6 | 5 | 6 | 50.5 | 117 | 129 | 141 | 6 | 6 | 51.5 | 5 | 12 | 5 | 9.5 | 0 |
| 12 FT | 12 | 14 | 10 | 9 | 5 | 6.5 | 5 | 6 | 48.1 | 32.0 | 32.0 | 32.0 | 6 | 13 | 52.0 | 6 | 13 | 32.5 | 6 | 8 | 5 | 6 | 49.0 | 118 | 130 | 142 | 6 | 6 | 51.0 | 5 | 12 | 5 | 9 | 0 |
| 14 FT | 14 | 15 | 10 | 9 | 5 | 6 | 5 | 6 | 47.1 | 34.0 | 34.0 | 34.0 | 6 | 14 | 51.5 | 6 | 14 | 32.5 | 6 | 8 | 5 | 6 | 47.9 | 119 | 131 | 143 | 6 | 6 | 51.0 | 5 | 12 | 5 | 8 | 0 |
| 16 FT | 15 | 16 | 10 | 9 | 6 | 8 | 6 | 8 | 55.0 | 35.0 | 35.0 | 35.0 | 6 | 13 | 57.0 | 6 | 13 | 38.5 | 6 | 7.5 | 5 | 6 | 46.9 | 120 | 132 | 144 | 6 | 6 | 51.0 | 5 | 12 | 5 | 8 | 0 |
| 18 FT | 16 | 17 | 10 | 9 | 6 | 8 | 6 | 7.5 | 53.9 | 36.0 | 36.0 | 40.0 | 6 | 13 | 56.5 | 6 | 13 | 38.0 | 6 | 7 | 6 | 7 | 49.0 | 121 | 133 | 145 | 6 | 6 | 51.0 | 5 | 12 | 5 | 8 | 0 |
| 20 FT | 17 | 18 | 11 | 9 | 6 | 7.5 | 6 | 8 | 54.0 | 37.0 | 37.0 | 37.0 | 6 | 13 | 56.0 | 6 | 13 | 38.0 | 6 | 6.5 | 5 | 6 | 45.9 | 122 | 134 | 146 | 6 | 6 | 51.0 | 5 | 12 | 5 | 7.5 | 0 |
| 22 FT | 18 | 20 | 12 | 9 | 6 | 7 | 6 | 8 | 54.4 | 38.0 | 38.0 | 38.0 | 6 | 13 | 55.5 | 6 | 13 | 38.0 | 6 | 7.5 | 5 | 6.5 | 46.0 | 124 | 136 | 148 | 6 | 6 | 51.0 | 5 | 12 | 5 | 7 | 0 |
| 24 FT | 18 | 20 | 12 | 9 | 6 | 7 | 6 | 8 | 52.1 | 38.0 | 38.0 | 38.0 | 6 | 12 | 54.5 | 6 | 12 | 37.5 | 6 | 6.5 | 5 | 6.5 | 43.5 | 124 | 136 | 148 | 6 | 6 | 51.0 | 5 | 12 | 5 | 7.5 | 0 |
| 26 FT | 19 | 22 | 12 | 9 | 6 | 6.5 | 6 | 7.5 | 52.1 | 39.0 | 39.0 | 39.0 | 6 | 12 | 54.5 | 6 | 12 | 37.5 | 6 | 7 | 5 | 6.5 | 43.6 | 126 | 138 | 150 | 7 | 7.5 | 54.0 | 5 | 12 | 5 | 7 | 0 |
| 28 FT | 20 | 23 | 12 | 9 | 6 | 6.5 | 6 | 7 | 52.1 | 40.0 | 40.0 | 40.0 | 6 | 12 | 54.0 | 6 | 12 | 37.5 | 6 | 7 | 5 | 6 | 43.8 | 127 | 139 | 151 | 7 | 7 | 54.0 | 5 | 12 | 5 | 7 | 0 |
| 30 FT | 21 | 24 | 13 | 9 | 6 | 6 | 6 | 7.5 | 52.8 | 41.0 | 41.0 | 41.0 | 6 | 12 | 53.0 | 6 | 12 | 37.0 | 6 | 6.5 | 5 | 6 | 44.1 | 128 | 140 | 152 | 7 | 7 | 54.0 | 5 | 12 | 5 | 6.5 | 0 |
| 32 FT | 22 | 25 | 13 | 9 | 6 | 6 | 6 | 7 | 52.8 | 42.0 | 42.0 | 42.0 | 7 | 15 | 56.5 | 7 | 15 | 41.0 | 6 | 6.5 | 5 | 6 | 44.3 | 129 | 141 | 153 | 7 | 6.5 | 54.0 | 5 | 12 | 5 | 6.5 | 0 |
| 34 FT | 23 | 26 | 13 | 9 | 6 | 6 | 6 | 6.5 | 52.8 | 43.0 | 43.0 | 43.0 | 7 | 15 | 57.0 | 7 | 15 | 40.0 | 6 | 6.5 | 5 | 6 | 44.4 | 130 | 142 | 154 | 7 | 6.5 | 54.0 | 5 | 12 | 5 | 6.5 | 0 |
| 36 FT | 24 | 27 | 14 | 9 | 7 | 8 | 6 | 7 | 53.4 | 44.0 | 44.0 | 44.0 | 7 | 14 | 56.0 | 7 | 14 | 39.5 | 6 | 6.5 | 5 | 6 | 44.8 | 131 | 143 | 155 | 7 | 6 | 54.0 | 5 | 12 | 5 | 6 | 0 |
| 38 FT | 25 | 28 | 14 | 9 | 7 | 7.5 | 6 | 7 | 53.4 | 45.0 | 45.0 | 45.0 | 7 | 14 | 55.0 | 7 | 14 | 38.5 | 6 | 6.5 | 5 | 6 | 44.9 | 132 | 144 | 156 | 7 | 6 | 54.0 | 5 | 12 | 5 | 6 | 0 |
| 40 FT | 25 | 29 | 14 | 9 | 7 | 7 | 6 | 6 | 53.4 | 45.0 | 49.0 | 49.0 | 7 | 14 | 55.0 | 7 | 14 | 39.0 | 6 | 6 | 6 | 8.5 | 47.9 | 133 | 145 | 157 | 8 | 7.5 | 60.0 | 5 | 12 | 5 | 6 | 0 |
| 42 FT | 26 | 30 | 15 | 9 | 7 | 7 | 6 | 6.5 | 54.1 | 50.0 | 50.0 | 50.0 | 7 | 13 | 54.0 | 7 | 13 | 38.0 | 6 | 6 | 6 | 8 | 48.4 | 134 | 146 | 158 | 8 | 7.5 | 60.0 | 5 | 12 | 6 | 8 | 0 |
| 44 FT | 27 | 31 | 15 | 9 | 7 | 7 | 6 | 6.5 | 54.1 | 51.0 | 51.0 | 51.0 | 7 | 13 | 54.0 | 7 | 13 | 37.0 | 6 | 6 | 6 | 7.5 | 48.6 | 135 | 147 | 159 | 8 | 7 | 60.0 | 5 | 12 | 6 | 8 | 0 |
| 46 FT | 27 | 32 | 16 | 9 | 7 | 6.5 | 6 | 6.5 | 55.0 | 51.0 | 51.0 | 51.0 | 7 | 13 | 53.5 | 7 | 13 | 37.5 | 6 | 6 | 6 | 7.5 | 48.9 | 136 | 148 | 160 | 8 | 7 | 60.0 | 5 | 12 | 6 | 8 | 0 |
| 48 FT | 28 | 32 | 16 | 9 | 7 | 6.5 | 6 | 6 | 54.9 | 52.0 | 52.0 | 52.0 | 7 | 13 | 53.0 | 7 | 13 | 37.0 | 7 | 8 | 6 | 7.5 | 49.0 | 136 | 148 | 160 | 8 | 7 | 60.0 | 5 | 12 | 6 | 8 | 0 |
| 50 FT | 29 | 33 | 17 | 9 | 7 | 6.5 | 6 | 6.5 | 55.6 | 53.0 | 53.0 | 53.0 | 7 | 13 | 52.5 | 7 | 13 | 37.0 | 7 | 7.5 | 6 | 7 | 49.5 | 137 | 149 | 161 | 8 | 7 | 60.0 | 5 | 12 | 6 | 7.5 | 0 |

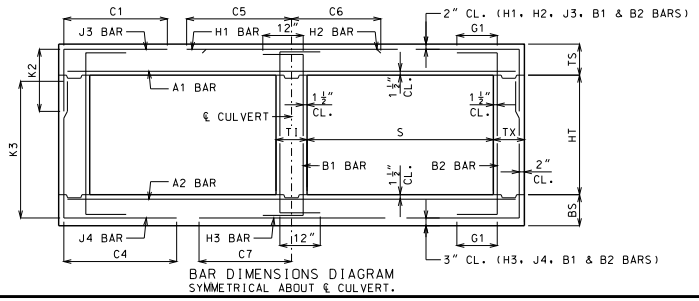


BAR DIMENSIONS DIAGRAM
SYMMETRICAL ABOUT ℄ CULVERT.

GENERAL NOTES:

IF DESIGN FILL IS BETWEEN TABULATED DESIGN FILLS, USE THE NEXT GREATER TABULATED DESIGN FILL, EXCEPT FOR DESIGN FILLS BETWEEN 2 FEET AND 4 FEET. FOR DESIGN FILLS BETWEEN 2 FEET AND 4 FEET USE THE GREATER MEMBER THICKNESS, AREA OF REINFORCEMENT AND BAR DIMENSIONS FROM THE 2 FEET AND 4 FEET TABULATED DESIGN FILLS. AREA OF REINFORCEMENT EQUALS BAR AREA PER FOOT SPACING.

SPECIAL DESIGNS ARE REQUIRED WHEN THE DESIGN FILL IS LESS THAN 1 FOOT OR GREATER THAN 50 FEET.

DIMENSIONS ARE IN INCHES UNLESS OTHERWISE SPECIFIED.

DESIGN FILLS ARE MEASURED FROM THE TOP OF TOP SLAB TO THE TOP OF EARTH FILL OR ROADWAY.

CULVERTS MEET STRENGTH AND SERVICEABILITY REQUIREMENTS FOR THE DESIGN VEHICULAR LIVE LOAD HL-93 MINUS THE LANE LOAD.


MISSOURI HIGHWAYS AND TRANSPORTATION COMMISSION
105 WEST CAPITOL
JEFFERSON CITY, MO 65102
1-888-ASK-MODOT (1-888-275-6636)


STATE OF MISSOURI
DENNIS W. HECKMANN
NUMBER PE-27141
PROFESSIONAL ENGINEER
THIS SHEET HAS BEEN SIGNED, SEALED AND DATED ELECTRONICALLY.

# CONCRETE DOUBLE BOX CULVERT

MEMBER THICKNESS
BAR SIZE, SPACING & DIMENSIONS

SPAN (S): 11 FEET
HEIGHT (HT): 6 THRU 11 FEET

DATE EFFECTIVE: 10/01/2011
DATE PREPARED: 9/8/2011

703.47

SHEET NO.
16 OF 27

IF A SEAL IS PRESENT ON THIS SHEET IT HAS BEEN ELECTRONICALLY SEALED AND DATED.

SPAN (S) = 11 FT  HEIGHT (HT) = 12 FT OR 13 FT OR 14 FT

| DESIGN FILL | MEMBER THICKNESS | | | | TOP SLAB BARS | | | | | | | | | | | | | | BOTTOM SLAB BARS | | | | | | | | | | | | | WALL BARS | | | | |
|---|---|---|---|---|---|---|---|---|---|---|---|---|---|---|---|---|---|---|---|---|---|---|---|---|---|---|---|---|---|---|---|---|---|---|---|
| | | | | | A1 BARS | | J3 BARS | | | | | | H1 BARS | | | H2 BARS | | | A2 BARS | | J4 BARS | | | | | H3 BARS | | | B1 BARS | | B2 BARS | | |
| | | | | | | | | | | K2 | | | | | | | | | | | | | K3 | | | | | | | | | |
| | TS | BS | TX | TI | SIZE | SPA. | SIZE | SPA. | C1 | HT=12' | HT=13' | HT=14' | SIZE | SPA. | C5 | SIZE | SPA. | C6 | SIZE | SPA. | SIZE | SPA. | C4 | HT=12' | HT=13' | HT=14' | SIZE | SPA. | C7 | SIZE | SPA. | SIZE | SPA. | G1 |
| 1 FT | 14 | 12 | 9 | 11 | 5 | 6 | 5 | 6 | 55.6 | 34.0 | 34.0 | 34.0 | 5 | 13 | 110.0 | 5 | 13 | 30.5 | 5 | 8 | 6 | 6 | 94.6 | 152 | 164 | 176 | 5 | 6 | 51.5 | 5 | 12 | 5 | 8.5 | 12 |
| 2 FT | 14 | 12 | 9 | 11 | 5 | 6 | 6 | 7.5 | 55.6 | 34.0 | 34.0 | 38.0 | 5 | 12 | 110.0 | 5 | 12 | 30.0 | 5 | 7.5 | 6 | 6 | 89.4 | 152 | 164 | 176 | 5 | 6 | 51.0 | 5 | 12 | 5 | 8.5 | 12 |
| 4 FT | 10 | 12 | 10 | 11 | 5 | 7 | 6 | 7 | 58.3 | 30.0 | 30.0 | 34.0 | 6 | 16 | 112.5 | 6 | 16 | 35.5 | 5 | 7 | 6 | 6.5 | 83.4 | 152 | 164 | 176 | 6 | 7 | 53.5 | 5 | 11.5 | 5 | 8 | 12 |
| 6 FT | 10 | 12 | 10 | 11 | 5 | 7.5 | 6 | 6.5 | 78.8 | 30.0 | 34.0 | 34.0 | 6 | 15 | 57.5 | 6 | 15 | 34.0 | 5 | 6.5 | 6 | 6 | 77.1 | 152 | 164 | 176 | 6 | 6.5 | 52.5 | 5 | 12 | 5 | 7.5 | 12 |
| 8 FT | 10 | 13 | 10 | 11 | 5 | 7.5 | 6 | 6 | 70.1 | 34.0 | 34.0 | 34.0 | 6 | 14 | 54.0 | 6 | 14 | 33.5 | 5 | 6 | 6 | 6 | 74.1 | 153 | 165 | 177 | 6 | 6.5 | 52.0 | 5 | 12 | 5 | 7 | 0 |
| 10 FT | 11 | 13 | 11 | 11 | 5 | 7.5 | 6 | 7 | 67.0 | 31.0 | 31.0 | 35.0 | 6 | 14 | 52.5 | 6 | 14 | 33.0 | 5 | 6 | 6 | 6 | 69.9 | 153 | 165 | 177 | 6 | 6 | 51.5 | 5 | 12 | 5 | 7.5 | 0 |
| 12 FT | 12 | 14 | 12 | 11 | 5 | 7 | 6 | 8 | 64.6 | 32.0 | 32.0 | 36.0 | 6 | 14 | 51.5 | 6 | 14 | 33.0 | 6 | 8 | 6 | 7 | 67.6 | 154 | 166 | 178 | 6 | 6 | 51.5 | 5 | 12 | 5 | 7 | 0 |
| 14 FT | 13 | 15 | 12 | 11 | 5 | 6.5 | 6 | 7 | 63.4 | 33.0 | 37.0 | 37.0 | 6 | 13 | 51.0 | 6 | 13 | 33.0 | 6 | 7.5 | 6 | 6.5 | 66.4 | 155 | 167 | 179 | 6 | 6 | 51.0 | 5 | 12 | 5 | 7 | 0 |
| 16 FT | 14 | 16 | 13 | 11 | 5 | 6 | 6 | 7 | 62.3 | 34.0 | 38.0 | 38.0 | 6 | 13 | 51.0 | 6 | 13 | 33.0 | 6 | 7 | 6 | 7 | 64.8 | 156 | 168 | 180 | 6 | 6 | 51.0 | 5 | 12 | 5 | 6.5 | 0 |
| 18 FT | 15 | 17 | 13 | 11 | 6 | 8 | 6 | 6.5 | 67.6 | 35.0 | 39.0 | 39.0 | 6 | 12 | 56.5 | 6 | 12 | 38.5 | 6 | 6.5 | 6 | 6 | 63.8 | 157 | 169 | 181 | 6 | 6 | 51.0 | 5 | 12 | 5 | 6.5 | 0 |
| 20 FT | 16 | 19 | 14 | 11 | 6 | 8 | 6 | 6.5 | 67.4 | 36.0 | 40.0 | 40.0 | 6 | 12 | 56.0 | 6 | 12 | 38.5 | 6 | 7.5 | 6 | 6.5 | 63.8 | 159 | 171 | 183 | 6 | 6 | 51.5 | 5 | 12 | 5 | 6 | 0 |
| 22 FT | 17 | 20 | 14 | 11 | 6 | 7.5 | 6 | 6 | 67.3 | 37.0 | 41.0 | 41.0 | 6 | 12 | 55.5 | 6 | 12 | 38.5 | 6 | 7 | 6 | 6 | 63.5 | 160 | 172 | 184 | 6 | 6 | 51.0 | 5 | 12 | 5 | 6 | 0 |
| 24 FT | 18 | 21 | 15 | 11 | 6 | 7 | 6 | 6.5 | 67.4 | 42.0 | 42.0 | 42.0 | 6 | 12 | 55.0 | 6 | 12 | 38.5 | 6 | 7 | 6 | 6.5 | 63.4 | 161 | 173 | 185 | 7 | 7.5 | 54.5 | 5 | 12 | 6 | 8 | 0 |
| 26 FT | 19 | 22 | 15 | 11 | 6 | 6.5 | 6 | 6.5 | 65.3 | 43.0 | 43.0 | 43.0 | 6 | 13 | 54.5 | 6 | 13 | 38.0 | 6 | 7 | 6 | 7 | 61.1 | 162 | 174 | 186 | 7 | 7.5 | 54.0 | 5 | 12 | 6 | 8 | 0 |
| 28 FT | 20 | 23 | 15 | 11 | 6 | 6.5 | 6 | 6 | 65.3 | 44.0 | 44.0 | 44.0 | 6 | 12 | 54.0 | 6 | 12 | 38.0 | 6 | 7 | 6 | 6.5 | 61.3 | 163 | 175 | 187 | 7 | 7 | 54.0 | 5 | 12 | 6 | 8 | 0 |
| 30 FT | 21 | 24 | 16 | 11 | 6 | 6.5 | 6 | 6 | 65.8 | 45.0 | 45.0 | 45.0 | 6 | 12 | 53.0 | 6 | 12 | 37.0 | 6 | 6.5 | 6 | 7 | 61.4 | 164 | 176 | 188 | 7 | 7 | 54.0 | 5 | 12 | 6 | 8 | 0 |
| 32 FT | 22 | 25 | 16 | 11 | 6 | 6 | 7 | 7.5 | 70.8 | 46.0 | 46.0 | 46.0 | 7 | 15 | 57.5 | 7 | 15 | 41.0 | 6 | 6.5 | 6 | 6.5 | 61.6 | 165 | 177 | 189 | 7 | 6.5 | 54.0 | 5 | 12 | 6 | 8 | 0 |
| 34 FT | 23 | 26 | 17 | 11 | 6 | 6 | 6 | 6 | 66.4 | 47.0 | 47.0 | 47.0 | 7 | 15 | 56.5 | 7 | 15 | 40.0 | 6 | 6.5 | 6 | 7 | 61.9 | 166 | 178 | 190 | 7 | 6.5 | 54.5 | 5 | 12 | 6 | 7.5 | 0 |
| 36 FT | 23 | 27 | 17 | 11 | 7 | 7.5 | 7 | 7 | 71.3 | 47.0 | 47.0 | 47.0 | 7 | 15 | 56.5 | 7 | 15 | 41.0 | 6 | 6.5 | 6 | 6.5 | 62.0 | 167 | 179 | 191 | 7 | 6 | 54.5 | 5 | 12 | 6 | 7.5 | 0 |
| 38 FT | 24 | 28 | 18 | 11 | 7 | 7.5 | 7 | 7.5 | 71.8 | 48.0 | 48.0 | 48.0 | 7 | 14 | 55.5 | 7 | 14 | 40.0 | 6 | 6 | 6 | 6.5 | 62.4 | 168 | 180 | 192 | 7 | 6 | 54.5 | 5 | 12 | 6 | 7 | 0 |
| 40 FT | 25 | 29 | 19 | 11 | 7 | 7.5 | 7 | 7.5 | 72.4 | 49.0 | 49.0 | 49.0 | 7 | 14 | 55.0 | 7 | 14 | 39.0 | 6 | 6 | 6 | 6.5 | 62.6 | 169 | 181 | 193 | 8 | 7.5 | 60.5 | 5 | 12 | 6 | 6.5 | 0 |
| 42 FT | 26 | 30 | 19 | 11 | 7 | 7.5 | 7 | 7 | 72.5 | 50.0 | 50.0 | 50.0 | 7 | 13 | 54.5 | 7 | 13 | 38.0 | 6 | 6 | 6 | 6.5 | 62.9 | 170 | 182 | 194 | 8 | 7.5 | 60.5 | 5 | 12 | 6 | 6.5 | 0 |
| 44 FT | 27 | 31 | 20 | 11 | 7 | 7 | 7 | 7.5 | 73.0 | 51.0 | 51.0 | 51.0 | 7 | 14 | 54.0 | 7 | 14 | 38.0 | 6 | 6 | 6 | 6 | 63.3 | 171 | 183 | 195 | 8 | 7 | 60.5 | 5 | 12 | 6 | 6.5 | 0 |
| 46 FT | 28 | 32 | 20 | 11 | 7 | 7 | 7 | 6.5 | 73.1 | 52.0 | 52.0 | 52.0 | 7 | 14 | 53.5 | 7 | 14 | 38.0 | 6 | 6 | 6 | 6 | 63.5 | 172 | 184 | 196 | 8 | 7 | 60.5 | 5 | 12 | 6 | 6.5 | 0 |
| 48 FT | 28 | 32 | 21 | 11 | 7 | 6.5 | 7 | 6.5 | 73.6 | 52.0 | 52.0 | 52.0 | 7 | 14 | 53.5 | 7 | 14 | 37.5 | 7 | 7 | 6 | 6 | 63.5 | 172 | 184 | 196 | 8 | 7 | 60.5 | 5 | 12 | 6 | 6 | 0 |
| 50 FT | 28 | 33 | 22 | 11 | 7 | 6.5 | 7 | 6.5 | 74.1 | 52.0 | 52.0 | 52.0 | 7 | 13 | 53.5 | 7 | 13 | 37.5 | 7 | 7.5 | 6 | 6 | 63.9 | 173 | 185 | 197 | 8 | 7 | 60.5 | 5 | 12 | 6 | 6 | 0 |

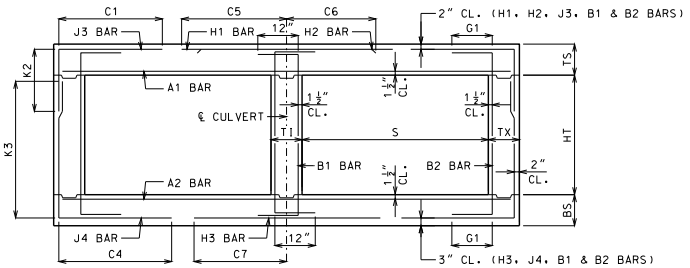


BAR DIMENSIONS DIAGRAM
SYMMETRICAL ABOUT ℄ CULVERT.

GENERAL NOTES:

IF DESIGN FILL IS BETWEEN TABULATED DESIGN FILLS, USE THE NEXT GREATER TABULATED DESIGN FILL, EXCEPT FOR DESIGN FILLS BETWEEN 2 FEET AND 4 FEET. FOR DESIGN FILLS BETWEEN 2 FEET AND 4 FEET USE THE GREATER MEMBER THICKNESS, AREA OF REINFORCEMENT AND BAR DIMENSIONS FROM THE 2 FEET AND 4 FEET TABULATED DESIGN FILLS. AREA OF REINFORCEMENT EQUALS BAR AREA PER FOOT SPACING.

SPECIAL DESIGNS ARE REQUIRED WHEN THE DESIGN FILL IS LESS THAN 1 FOOT OR GREATER THAN 50 FEET.

DIMENSIONS ARE IN INCHES UNLESS OTHERWISE SPECIFIED.

DESIGN FILLS ARE MEASURED FROM THE TOP OF TOP SLAB TO THE TOP OF EARTH FILL OR ROADWAY.

CULVERTS MEET STRENGTH AND SERVICEABILITY REQUIREMENTS FOR THE DESIGN VEHICULAR LIVE LOAD HL-93 MINUS THE LANE LOAD.


MISSOURI HIGHWAYS AND TRANSPORTATION COMMISSION
105 WEST CAPITOL
JEFFERSON CITY, MO 65102
1-888-ASK-MODOT (1-888-275-6636)


STATE OF MISSOURI
DENNIS W. HECKMANN
NUMBER PE-27141
PROFESSIONAL ENGINEER
THIS SHEET HAS BEEN SIGNED, SEALED AND DATED ELECTRONICALLY.

# CONCRETE DOUBLE BOX CULVERT

MEMBER THICKNESS
BAR SIZE, SPACING & DIMENSIONS

SPAN (S): 11 FEET
HEIGHT (HT): 12 THRU 14 FEET

DATE EFFECTIVE: 10/01/2011
DATE PREPARED: 9/8/2011

703.47

SHEET NO.
17 OF 27

IF A SEAL IS PRESENT ON THIS SHEET IT HAS BEEN ELECTRONICALLY SEALED AND DATED.

## SPAN (S) = 12 FT  HEIGHT (HT) = 6 FT OR 7 FT OR 8 FT

| DESIGN FILL | MEMBER THICKNESS | | | | TOP SLAB BARS | | | | | | | | | | | | | BOTTOM SLAB BARS | | | | | | | | | | | WALL BARS | | | | |
|---|---|---|---|---|---|---|---|---|---|---|---|---|---|---|---|---|---|---|---|---|---|---|---|---|---|---|---|---|---|---|---|---|---|
| | | | | | A1 BARS | | J3 BARS | | | K2 | | | H1 BARS | | | H2 BARS | | A2 BARS | | J4 BARS | | | K3 | | | H3 BARS | | | B1 BARS | | B2 BARS | | |
| | TS | BS | TX | TI | SIZE | SPA. | SIZE | SPA. | C1 | HT=6′ | HT=7′ | HT=8′ | SIZE | SPA. | C5 | SIZE | SPA. | C6 | SIZE | SPA. | SIZE | SPA. | C4 | HT=6′ | HT=7′ | HT=8′ | SIZE | SPA. | C7 | SIZE | SPA. | SIZE | SPA. | G1 |
| 1 FT | 14 | 10 | 8 | 8 | 5 | 6 | 4 | 6 | 56.1 | 30.0 | 30.0 | 30.0 | 5 | 12 | 115.0 | 5 | 12 | 31.5 | 5 | 7.5 | 5 | 6.5 | 52.4 | 78 | 90 | 102 | 6 | 6.5 | 56.5 | 5 | 12 | 5 | 12 | 12 |
| 2 FT | 15 | 11 | 8 | 8 | 6 | 8 | 4 | 6.5 | 59.1 | 31.0 | 31.0 | 31.0 | 6 | 16 | 118.0 | 6 | 16 | 39.0 | 5 | 7.5 | 5 | 7.5 | 47.9 | 79 | 91 | 103 | 6 | 6.5 | 56.0 | 5 | 12 | 5 | 12 | 12 |
| 4 FT | 11 | 10 | 8 | 8 | 5 | 6.5 | 5 | 7 | 43.6 | 31.0 | 31.0 | 31.0 | 6 | 15 | 77.5 | 6 | 15 | 36.5 | 5 | 6.5 | 5 | 6 | 42.6 | 78 | 90 | 102 | 7 | 6.5 | 58.5 | 5 | 12 | 5 | 12 | 12 |
| 6 FT | 11 | 11 | 8 | 8 | 5 | 7 | 5 | 6.5 | 40.9 | 27.0 | 31.0 | 31.0 | 6 | 14 | 63.0 | 6 | 14 | 35.0 | 5 | 6.5 | 5 | 7 | 39.3 | 79 | 91 | 103 | 7 | 6.5 | 57.5 | 5 | 12 | 5 | 12 | 12 |
| 8 FT | 11 | 13 | 8 | 8 | 5 | 7 | 5 | 6 | 39.1 | 27.0 | 27.0 | 31.0 | 6 | 12 | 58.0 | 6 | 12 | 34.0 | 5 | 6 | 5 | 8.5 | 36.3 | 81 | 93 | 105 | 6 | 6 | 54.5 | 5 | 12 | 5 | 12 | 0 |
| 10 FT | 12 | 14 | 8 | 8 | 5 | 6.5 | 5 | 6.5 | 37.0 | 28.0 | 28.0 | 32.0 | 6 | 12 | 56.5 | 6 | 12 | 33.5 | 6 | 8 | 5 | 8.5 | 34.5 | 82 | 94 | 106 | 6 | 6 | 54.5 | 5 | 12 | 5 | 12 | 0 |
| 12 FT | 14 | 15 | 8 | 8 | 5 | 6 | 5 | 8 | 34.6 | 30.0 | 34.0 | 34.0 | 6 | 13 | 55.5 | 6 | 13 | 33.5 | 6 | 7.5 | 5 | 8.5 | 33.8 | 83 | 95 | 107 | 7 | 7 | 57.0 | 5 | 12 | 5 | 12 | 0 |
| 14 FT | 15 | 16 | 8 | 8 | 6 | 8 | 5 | 7.5 | 38.4 | 31.0 | 35.0 | 35.0 | 6 | 12 | 61.0 | 6 | 12 | 39.5 | 6 | 7.5 | 5 | 8 | 32.9 | 84 | 96 | 108 | 7 | 7 | 57.0 | 5 | 12 | 5 | 12 | 0 |
| 16 FT | 16 | 17 | 8 | 8 | 6 | 8 | 5 | 7 | 37.5 | 32.0 | 36.0 | 36.0 | 7 | 16 | 65.5 | 7 | 16 | 44.5 | 6 | 7 | 5 | 7 | 32.3 | 85 | 97 | 109 | 7 | 6.5 | 57.0 | 5 | 12 | 5 | 12 | 0 |
| 18 FT | 17 | 19 | 8 | 8 | 6 | 7.5 | 5 | 6.5 | 37.0 | 37.0 | 37.0 | 37.0 | 7 | 15 | 65.0 | 7 | 15 | 44.0 | 6 | 7 | 5 | 6.5 | 31.6 | 87 | 99 | 111 | 7 | 7 | 57.0 | 5 | 12 | 5 | 10.5 | 0 |
| 20 FT | 18 | 20 | 8 | 8 | 6 | 7 | 5 | 6.5 | 36.4 | 38.0 | 38.0 | 38.0 | 7 | 15 | 64.5 | 7 | 15 | 44.0 | 6 | 6.5 | 5 | 6 | 31.3 | 88 | 100 | 112 | 7 | 7 | 57.0 | 5 | 12 | 5 | 9.5 | 0 |
| 22 FT | 19 | 21 | 8 | 8 | 6 | 6 | 5 | 6 | 36.0 | 39.0 | 39.0 | 39.0 | 7 | 14 | 64.0 | 7 | 14 | 44.0 | 6 | 6.5 | 6 | 7.5 | 34.1 | 89 | 101 | 113 | 7 | 7 | 57.0 | 5 | 12 | 5 | 9.5 | 0 |
| 24 FT | 21 | 22 | 8 | 8 | 6 | 6 | 6 | 7 | 39.6 | 45.0 | 45.0 | 45.0 | 7 | 15 | 63.5 | 7 | 15 | 44.0 | 6 | 6.5 | 6 | 7 | 34.4 | 90 | 102 | 114 | 7 | 7 | 56.5 | 5 | 12 | 5 | 9.5 | 0 |
| 26 FT | 21 | 23 | 8 | 8 | 6 | 6 | 6 | 7 | 38.3 | 45.0 | 45.0 | 45.0 | 7 | 14 | 63.0 | 7 | 14 | 43.5 | 6 | 6.5 | 6 | 6.5 | 32.8 | 91 | 103 | 115 | 7 | 7 | 56.5 | 5 | 12 | 5 | 9.5 | 0 |
| 28 FT | 23 | 24 | 8 | 8 | 6 | 6 | 6 | 6 | 38.3 | 47.0 | 47.0 | 47.0 | 7 | 15 | 62.0 | 7 | 15 | 43.0 | 6 | 6 | 6 | 6 | 33.0 | 92 | 104 | 116 | 7 | 7 | 56.5 | 5 | 12 | 5 | 9 | 0 |
| 30 FT | 23 | 25 | 8 | 8 | 7 | 7 | 6 | 6 | 38.3 | 47.0 | 47.0 | 47.0 | 7 | 14 | 62.0 | 7 | 14 | 43.5 | 6 | 6 | 6 | 6 | 33.0 | 93 | 105 | 117 | 7 | 6.5 | 56.5 | 5 | 12 | 5 | 8.5 | 0 |
| 32 FT | 25 | 27 | 9 | 8 | 7 | 7.5 | 6 | 6.5 | 39.1 | 49.0 | 49.0 | 49.0 | 7 | 14 | 61.0 | 7 | 14 | 41.5 | 6 | 6 | 6 | 6.5 | 33.8 | 95 | 107 | 119 | 7 | 6 | 56.5 | 5 | 12 | 5 | 8.5 | 0 |
| 34 FT | 25 | 28 | 9 | 8 | 7 | 6.5 | 6 | 6.5 | 39.3 | 49.0 | 49.0 | 49.0 | 7 | 13 | 61.0 | 7 | 13 | 42.5 | 6 | 6 | 6 | 6 | 33.8 | 96 | 108 | 120 | 7 | 6 | 56.5 | 5 | 12 | 5 | 8.5 | 0 |
| 36 FT | 26 | 29 | 9 | 8 | 7 | 6.5 | 6 | 6.5 | 39.3 | 50.0 | 50.0 | 50.0 | 7 | 13 | 60.0 | 7 | 13 | 41.5 | 6 | 6 | 6 | 6 | 33.9 | 97 | 109 | 121 | 8 | 7.5 | 62.5 | 5 | 12 | 5 | 8 | 0 |
| 38 FT | 27 | 30 | 10 | 8 | 7 | 6.5 | 6 | 7 | 40.1 | 51.0 | 51.0 | 51.0 | 7 | 13 | 59.0 | 7 | 13 | 41.0 | 6 | 6 | 6 | 6.5 | 34.5 | 98 | 110 | 122 | 8 | 7.5 | 62.5 | 5 | 12 | 5 | 8 | 0 |
| 40 FT | 28 | 31 | 10 | 8 | 7 | 6.5 | 6 | 6.5 | 40.1 | 52.0 | 52.0 | 52.0 | 7 | 12 | 58.5 | 7 | 12 | 40.0 | 7 | 8 | 6 | 6 | 34.6 | 99 | 111 | 123 | 8 | 7 | 62.5 | 5 | 12 | 5 | 8 | 0 |
| 42 FT | 29 | 32 | 10 | 8 | 7 | 6.5 | 6 | 6.5 | 40.1 | 53.0 | 53.0 | 53.0 | 7 | 12 | 57.5 | 7 | 12 | 39.0 | 7 | 8 | 6 | 6 | 34.9 | 100 | 112 | 124 | 8 | 7 | 62.5 | 5 | 12 | 5 | 7.5 | 0 |
| 44 FT | 30 | 33 | 10 | 8 | 7 | 6.5 | 6 | 6 | 40.3 | 54.0 | 54.0 | 54.0 | 7 | 12 | 56.5 | 7 | 12 | 38.5 | 7 | 7.5 | 7 | 6.5 | 38.1 | 101 | 113 | 125 | 8 | 6.5 | 62.0 | 5 | 12 | 5 | 7 | 0 |
| 46 FT | 31 | 34 | 10 | 8 | 7 | 6 | 6 | 6 | 40.3 | 55.0 | 55.0 | 55.0 | 8 | 15 | 64.0 | 8 | 15 | 45.5 | 7 | 7.5 | 7 | 6.5 | 38.3 | 102 | 114 | 126 | 8 | 6.5 | 62.0 | 5 | 12 | 5 | 6.5 | 0 |
| 48 FT | 31 | 34 | 11 | 8 | 7 | 6 | 6 | 6.5 | 41.0 | 55.0 | 55.0 | 55.0 | 8 | 15 | 64.0 | 8 | 15 | 46.0 | 7 | 6.5 | 6 | 6 | 35.6 | 102 | 114 | 126 | 8 | 6.5 | 62.5 | 5 | 12 | 5 | 7.5 | 0 |
| 50 FT | 32 | 35 | 11 | 8 | 8 | 7.5 | 6 | 6.5 | 41.0 | 56.0 | 56.0 | 56.0 | 8 | 15 | 63.5 | 8 | 15 | 45.5 | 7 | 7 | 6 | 6 | 35.8 | 103 | 115 | 127 | 8 | 6.5 | 62.0 | 5 | 12 | 5 | 7 | 0 |

## SPAN (S) = 12 FT  HEIGHT (HT) = 9 FT OR 10 FT OR 11 FT

| DESIGN FILL | MEMBER THICKNESS | | | | TOP SLAB BARS | | | | | | | | | | | | | BOTTOM SLAB BARS | | | | | | | | | | | WALL BARS | | | | |
|---|---|---|---|---|---|---|---|---|---|---|---|---|---|---|---|---|---|---|---|---|---|---|---|---|---|---|---|---|---|---|---|---|---|
| | | | | | A1 BARS | | J3 BARS | | | K2 | | | H1 BARS | | | H2 BARS | | A2 BARS | | J4 BARS | | | K3 | | | H3 BARS | | | B1 BARS | | B2 BARS | | |
| | TS | BS | TX | TI | SIZE | SPA. | SIZE | SPA. | C1 | HT=9′ | HT=10′ | HT=11′ | SIZE | SPA. | C5 | SIZE | SPA. | C6 | SIZE | SPA. | SIZE | SPA. | C4 | HT=9′ | HT=10′ | HT=11′ | SIZE | SPA. | C7 | SIZE | SPA. | SIZE | SPA. | G1 |
| 1 FT | 14 | 11 | 8 | 9 | 5 | 6 | 5 | 8 | 58.3 | 34.0 | 34.0 | 34.0 | 5 | 12 | 117.5 | 5 | 12 | 32.0 | 5 | 7.5 | 6 | 6.5 | 77.5 | 115 | 127 | 139 | 6 | 7 | 57.0 | 5 | 12 | 5 | 10 | 12 |
| 2 FT | 15 | 12 | 8 | 9 | 6 | 8 | 5 | 8 | 62.3 | 35.0 | 35.0 | 35.0 | 6 | 16 | 121.5 | 6 | 16 | 39.5 | 5 | 7.5 | 6 | 7 | 71.9 | 116 | 128 | 140 | 6 | 7 | 56.5 | 5 | 12 | 5 | 10 | 12 |
| 4 FT | 11 | 11 | 9 | 9 | 5 | 6.5 | 6 | 7 | 76.1 | 31.0 | 31.0 | 35.0 | 6 | 15 | 86.0 | 6 | 15 | 37.0 | 5 | 6.5 | 6 | 7 | 61.8 | 115 | 127 | 139 | 6 | 6 | 56.0 | 5 | 11.5 | 5 | 10.5 | 12 |
| 6 FT | 11 | 12 | 9 | 9 | 5 | 7 | 6 | 7 | 59.0 | 31.0 | 31.0 | 35.0 | 6 | 14 | 63.0 | 6 | 14 | 35.5 | 5 | 6 | 6 | 7 | 57.6 | 116 | 128 | 140 | 6 | 6 | 55.0 | 5 | 12 | 5 | 10 | 12 |
| 8 FT | 11 | 13 | 9 | 9 | 5 | 7 | 6 | 7 | 54.0 | 31.0 | 31.0 | 35.0 | 6 | 13 | 58.0 | 6 | 13 | 34.5 | 5 | 6 | 6 | 7 | 54.5 | 117 | 129 | 141 | 6 | 6 | 55.0 | 5 | 12 | 5 | 9.5 | 0 |
| 10 FT | 12 | 14 | 10 | 9 | 5 | 7 | 5 | 6 | 49.0 | 32.0 | 32.0 | 32.0 | 6 | 12 | 56.0 | 6 | 12 | 34.0 | 6 | 8 | 5 | 6.5 | 49.3 | 118 | 130 | 142 | 7 | 7 | 57.5 | 5 | 12 | 5 | 10 | 0 |
| 12 FT | 13 | 15 | 10 | 9 | 5 | 6.5 | 6 | 7.5 | 50.1 | 33.0 | 33.0 | 33.0 | 6 | 12 | 55.0 | 6 | 12 | 33.5 | 6 | 7.5 | 5 | 6.5 | 47.6 | 119 | 131 | 143 | 7 | 7 | 57.5 | 5 | 12 | 5 | 9 | 0 |
| 14 FT | 15 | 16 | 10 | 9 | 6 | 8 | 5 | 6 | 50.6 | 35.0 | 35.0 | 35.0 | 6 | 12 | 60.5 | 6 | 12 | 39.5 | 6 | 7 | 5 | 6 | 46.4 | 120 | 132 | 144 | 7 | 7 | 57.0 | 5 | 12 | 5 | 8 | 0 |
| 16 FT | 16 | 17 | 10 | 9 | 6 | 8 | 6 | 7.5 | 53.8 | 36.0 | 36.0 | 36.0 | 6 | 12 | 60.0 | 6 | 12 | 39.5 | 6 | 6.5 | 5 | 6 | 45.4 | 121 | 133 | 145 | 7 | 6.5 | 57.0 | 5 | 12 | 5 | 8 | 0 |
| 18 FT | 17 | 19 | 10 | 9 | 6 | 7.5 | 6 | 7 | 53.1 | 37.0 | 37.0 | 41.0 | 7 | 16 | 64.5 | 7 | 16 | 44.5 | 6 | 7 | 6 | 7.5 | 47.8 | 123 | 135 | 147 | 7 | 7 | 57.0 | 5 | 12 | 5 | 8 | 0 |
| 20 FT | 18 | 20 | 11 | 9 | 6 | 7 | 6 | 7.5 | 53.1 | 38.0 | 38.0 | 38.0 | 7 | 15 | 64.0 | 7 | 15 | 44.0 | 6 | 6.5 | 5 | 6 | 44.6 | 124 | 136 | 148 | 7 | 7 | 57.0 | 5 | 12 | 5 | 7.5 | 0 |
| 22 FT | 19 | 21 | 12 | 9 | 6 | 6.5 | 6 | 7.5 | 53.5 | 39.0 | 39.0 | 39.0 | 7 | 15 | 63.5 | 7 | 15 | 44.0 | 6 | 6.5 | 5 | 6.5 | 44.8 | 125 | 137 | 149 | 7 | 7 | 57.0 | 5 | 12 | 5 | 7.5 | 0 |
| 24 FT | 20 | 23 | 12 | 9 | 6 | 6.5 | 6 | 7 | 53.4 | 40.0 | 40.0 | 40.0 | 7 | 15 | 63.0 | 7 | 15 | 44.0 | 6 | 6.5 | 5 | 6.5 | 44.6 | 127 | 139 | 151 | 7 | 7 | 57.0 | 5 | 12 | 5 | 7 | 0 |
| 26 FT | 21 | 23 | 12 | 9 | 6 | 6 | 6 | 7.5 | 51.4 | 41.0 | 41.0 | 41.0 | 7 | 15 | 62.0 | 7 | 15 | 43.5 | 6 | 6 | 5 | 6.5 | 42.8 | 127 | 139 | 151 | 7 | 7 | 57.0 | 5 | 12 | 5 | 7 | 0 |
| 28 FT | 22 | 25 | 12 | 9 | 6 | 6 | 6 | 7 | 51.4 | 42.0 | 42.0 | 42.0 | 7 | 15 | 61.5 | 7 | 15 | 43.5 | 6 | 6.5 | 5 | 6.5 | 42.9 | 129 | 141 | 153 | 7 | 6.5 | 57.0 | 5 | 12 | 5 | 7 | 0 |
| 30 FT | 23 | 26 | 12 | 9 | 7 | 7.5 | 6 | 6.5 | 51.3 | 43.0 | 43.0 | 43.0 | 7 | 15 | 61.0 | 7 | 15 | 43.5 | 6 | 6 | 5 | 6 | 43.0 | 130 | 142 | 154 | 7 | 6.5 | 57.0 | 5 | 12 | 5 | 7 | 0 |
| 32 FT | 24 | 27 | 13 | 9 | 7 | 7.5 | 6 | 7 | 52.0 | 44.0 | 44.0 | 44.0 | 7 | 14 | 60.5 | 7 | 14 | 42.5 | 6 | 6 | 5 | 6 | 43.4 | 131 | 143 | 155 | 7 | 6 | 57.0 | 5 | 12 | 5 | 6.5 | 0 |
| 34 FT | 25 | 28 | 13 | 9 | 7 | 7 | 6 | 7 | 52.0 | 45.0 | 45.0 | 45.0 | 7 | 14 | 59.5 | 7 | 14 | 41.5 | 6 | 6 | 5 | 6 | 43.5 | 132 | 144 | 156 | 7 | 6 | 57.0 | 5 | 12 | 5 | 6.5 | 0 |
| 36 FT | 26 | 29 | 13 | 9 | 7 | 7 | 6 | 6 | 51.9 | 46.0 | 50.0 | 50.0 | 7 | 13 | 58.5 | 7 | 13 | 41.0 | 6 | 6 | 6 | 8.5 | 46.6 | 133 | 145 | 157 | 8 | 7.5 | 63.0 | 5 | 12 | 5 | 6.5 | 0 |
| 38 FT | 27 | 30 | 14 | 9 | 7 | 7 | 6 | 6.5 | 52.6 | 47.0 | 51.0 | 51.0 | 7 | 13 | 57.5 | 7 | 13 | 40.0 | 7 | 8 | 6 | 8 | 47.1 | 134 | 146 | 158 | 8 | 7.5 | 63.0 | 5 | 12 | 5 | 6 | 0 |
| 40 FT | 28 | 31 | 14 | 9 | 7 | 6.5 | 6 | 6.5 | 52.6 | 52.0 | 52.0 | 52.0 | 7 | 12 | 56.5 | 7 | 12 | 39.0 | 7 | 7.5 | 6 | 7.5 | 47.3 | 135 | 147 | 159 | 8 | 7 | 63.0 | 5 | 12 | 5 | 6 | 0 |
| 42 FT | 28 | 32 | 15 | 9 | 7 | 6 | 6 | 6.5 | 53.5 | 52.0 | 52.0 | 52.0 | 7 | 12 | 56.5 | 7 | 12 | 39.5 | 7 | 7.5 | 6 | 7.5 | 47.5 | 136 | 148 | 160 | 8 | 7 | 63.0 | 5 | 12 | 6 | 8 | 0 |
| 44 FT | 29 | 33 | 15 | 9 | 7 | 6 | 6 | 6.5 | 53.4 | 53.0 | 53.0 | 53.0 | 7 | 12 | 56.0 | 7 | 12 | 38.5 | 7 | 7.5 | 6 | 7 | 47.8 | 137 | 149 | 161 | 8 | 6.5 | 63.0 | 5 | 12 | 6 | 8 | 0 |
| 46 FT | 30 | 34 | 15 | 9 | 7 | 6 | 6 | 6 | 53.4 | 54.0 | 54.0 | 54.0 | 7 | 12 | 55.5 | 7 | 12 | 38.0 | 7 | 7.5 | 6 | 7 | 47.9 | 138 | 150 | 162 | 8 | 6.5 | 63.0 | 5 | 12 | 6 | 8 | 0 |
| 48 FT | 31 | 35 | 16 | 9 | 7 | 6 | 6 | 6.5 | 54.1 | 55.0 | 55.0 | 55.0 | 7 | 12 | 55.0 | 7 | 12 | 37.5 | 7 | 7 | 6 | 6.5 | 48.4 | 139 | 151 | 163 | 8 | 6.5 | 63.0 | 5 | 12 | 6 | 8 | 0 |
| 50 FT | 31 | 36 | 16 | 9 | 8 | 7.5 | 6 | 6 | 54.3 | 55.0 | 55.0 | 55.0 | 7 | 12 | 55.0 | 7 | 12 | 37.5 | 7 | 7 | 6 | 6.5 | 48.4 | 140 | 152 | 164 | 8 | 6.5 | 63.0 | 5 | 12 | 6 | 8 | 0 |

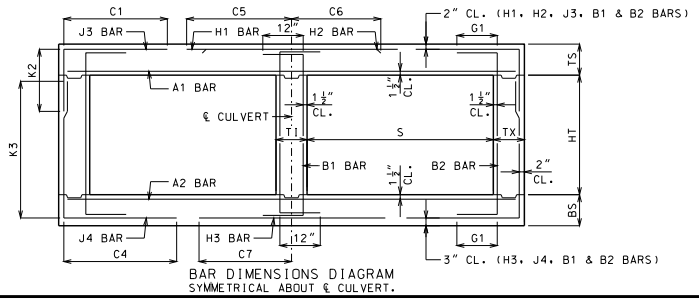


BAR DIMENSIONS DIAGRAM
SYMMETRICAL ABOUT ℄ CULVERT.

GENERAL NOTES:

IF DESIGN FILL IS BETWEEN TABULATED DESIGN FILLS, USE THE NEXT GREATER TABULATED DESIGN FILL, EXCEPT FOR DESIGN FILLS BETWEEN 2 FEET AND 4 FEET. FOR DESIGN FILLS BETWEEN 2 FEET AND 4 FEET USE THE GREATER MEMBER THICKNESS, AREA OF REINFORCEMENT AND BAR DIMENSIONS FROM THE 2 FEET AND 4 FEET TABULATED DESIGN FILLS. AREA OF REINFORCEMENT EQUALS BAR AREA PER FOOT SPACING.

SPECIAL DESIGNS ARE REQUIRED WHEN THE DESIGN FILL IS LESS THAN 1 FOOT OR GREATER THAN 50 FEET.

DIMENSIONS ARE IN INCHES UNLESS OTHERWISE SPECIFIED.

DESIGN FILLS ARE MEASURED FROM THE TOP OF TOP SLAB TO THE TOP OF EARTH FILL OR ROADWAY.

CULVERTS MEET STRENGTH AND SERVICEABILITY REQUIREMENTS FOR THE DESIGN VEHICULAR LIVE LOAD HL-93 MINUS THE LANE LOAD.


MISSOURI HIGHWAYS AND TRANSPORTATION COMMISSION
105 WEST CAPITOL
JEFFERSON CITY, MO 65102
1-888-ASK-MODOT (1-888-275-6636)


STATE OF MISSOURI
DENNIS W. HECKMAN
NUMBER PE-27141
PROFESSIONAL ENGINEER
THIS SHEET HAS BEEN SIGNED, SEALED AND DATED ELECTRONICALLY.

# CONCRETE DOUBLE BOX CULVERT

MEMBER THICKNESS
BAR SIZE, SPACING & DIMENSIONS

SPAN (S): 12 FEET
HEIGHT (HT): 6 THRU 11 FEET

DATE EFFECTIVE: 10/01/2011
DATE PREPARED: 9/8/2011

703.47

SHEET NO.
18 OF 27

IF A SEAL IS PRESENT ON THIS SHEET IT HAS BEEN ELECTRONICALLY SEALED AND DATED.

| SPAN (S) = 12 FT HEIGHT (HT) = 12 FT OR 13 FT | | | | | | | | | | | | | | | | | | | | | | | | | | | | | | | |
|---|---|---|---|---|---|---|---|---|---|---|---|---|---|---|---|---|---|---|---|---|---|---|---|---|---|---|---|---|---|---|---|
| DESIGN FILL | MEMBER THICKNESS | | | | TOP SLAB BARS | | | | | | | | | | | | BOTTOM SLAB BARS | | | | | | | | | | | WALL BARS | | | | |
| | | | | | A1 BARS | | J3 BARS | | | | | H1 BARS | | | H2 BARS | | | A2 BARS | | J4 BARS | | | | | H3 BARS | | | B1 BARS | | B2 BARS | | |
| | TS | BS | TX | TI | SIZE | SPA. | SIZE | SPA. | C1 | K2 HT=12' | K2 HT=13' | SIZE | SPA. | C5 | SIZE | SPA. | C6 | SIZE | SPA. | SIZE | SPA. | C4 | K3 HT=12' | K3 HT=13' | SIZE | SPA. | C7 | SIZE | SPA. | SIZE | SPA. | G1 |
| 1 FT | 14 | 11 | 9 | 10 | 5 | 6 | 5 | 6.5 | 59.0 | 34.0 | 34.0 | 5 | 12 | 118.0 | 5 | 12 | 32.5 | 5 | 7 | 6 | 6 | 88.9 | 151 | 163 | 6 | 6.5 | 57.5 | 5 | 12 | 5 | 8.5 | 12 |
| 2 FT | 15 | 12 | 9 | 10 | 6 | 8 | 5 | 7 | 63.0 | 35.0 | 35.0 | 6 | 16 | 122.0 | 6 | 16 | 39.5 | 5 | 7 | 6 | 6 | 83.6 | 152 | 164 | 6 | 7 | 57.0 | 5 | 12 | 5 | 8.5 | 12 |
| 4 FT | 11 | 12 | 9 | 10 | 5 | 6.5 | 6 | 7 | 61.0 | 35.0 | 35.0 | 6 | 15 | 120.0 | 6 | 15 | 37.0 | 5 | 6.5 | 6 | 6 | 76.5 | 152 | 164 | 6 | 6.5 | 56.5 | 5 | 12 | 5 | 8.5 | 12 |
| 6 FT | 11 | 12 | 9 | 10 | 5 | 7 | 6 | 6.5 | 73.5 | 35.0 | 35.0 | 6 | 14 | 63.5 | 6 | 14 | 35.5 | 5 | 6 | 6 | 6 | 70.0 | 152 | 164 | 6 | 6 | 55.5 | 5 | 12 | 5 | 8.5 | 12 |
| 8 FT | 11 | 13 | 10 | 10 | 5 | 7 | 6 | 7 | 63.9 | 31.0 | 35.0 | 6 | 13 | 58.0 | 6 | 13 | 34.5 | 5 | 6 | 6 | 6.5 | 65.8 | 153 | 165 | 6 | 6 | 55.0 | 5 | 12 | 5 | 8 | 0 |
| 10 FT | 12 | 14 | 10 | 10 | 5 | 7 | 6 | 7 | 61.6 | 36.0 | 36.0 | 6 | 12 | 56.5 | 6 | 12 | 34.5 | 6 | 8 | 6 | 6 | 63.1 | 154 | 166 | 7 | 7 | 57.5 | 5 | 12 | 5 | 8 | 0 |
| 12 FT | 13 | 15 | 11 | 10 | 5 | 6.5 | 6 | 7.5 | 59.9 | 33.0 | 37.0 | 6 | 12 | 55.0 | 6 | 12 | 34.0 | 6 | 7.5 | 6 | 6.5 | 61.4 | 155 | 167 | 7 | 7 | 57.5 | 5 | 12 | 5 | 7.5 | 0 |
| 14 FT | 14 | 16 | 12 | 10 | 5 | 6 | 6 | 7.5 | 58.8 | 34.0 | 38.0 | 6 | 12 | 54.5 | 6 | 12 | 34.0 | 6 | 7 | 6 | 7.5 | 60.0 | 156 | 168 | 7 | 7 | 57.5 | 5 | 12 | 5 | 7 | 0 |
| 16 FT | 16 | 18 | 12 | 10 | 6 | 8 | 6 | 7 | 64.1 | 36.0 | 40.0 | 6 | 12 | 60.0 | 6 | 12 | 40.0 | 6 | 7 | 6 | 7.5 | 59.5 | 158 | 170 | 6 | 6 | 54.0 | 5 | 12 | 5 | 7 | 0 |
| 18 FT | 17 | 19 | 12 | 10 | 6 | 7.5 | 6 | 6.5 | 63.1 | 37.0 | 41.0 | 6 | 12 | 59.5 | 6 | 12 | 39.5 | 6 | 7 | 6 | 6.5 | 58.5 | 159 | 171 | 7 | 7 | 57.0 | 5 | 12 | 5 | 7 | 0 |
| 20 FT | 18 | 20 | 13 | 10 | 6 | 7 | 6 | 6.5 | 62.6 | 38.0 | 42.0 | 6 | 12 | 58.5 | 6 | 12 | 39.5 | 6 | 6.5 | 6 | 7.5 | 57.9 | 160 | 172 | 7 | 7 | 57.0 | 5 | 12 | 5 | 6.5 | 0 |
| 22 FT | 19 | 21 | 13 | 10 | 6 | 6.5 | 6 | 6.5 | 62.3 | 39.0 | 43.0 | 7 | 16 | 63.0 | 7 | 16 | 44.5 | 6 | 6 | 6 | 6.5 | 57.5 | 161 | 173 | 7 | 7 | 57.0 | 5 | 12 | 5 | 6.5 | 0 |
| 24 FT | 20 | 23 | 14 | 10 | 6 | 6.5 | 6 | 6.5 | 62.5 | 40.0 | 44.0 | 7 | 16 | 62.5 | 7 | 16 | 44.0 | 6 | 6.5 | 6 | 7.5 | 57.8 | 163 | 175 | 7 | 7 | 57.0 | 5 | 12 | 5 | 6 | 0 |
| 26 FT | 21 | 24 | 14 | 10 | 6 | 6 | 6 | 6 | 62.3 | 41.0 | 45.0 | 7 | 15 | 62.0 | 7 | 15 | 44.0 | 6 | 6.5 | 6 | 7 | 57.6 | 164 | 176 | 7 | 7 | 57.0 | 5 | 12 | 5 | 6 | 0 |
| 28 FT | 22 | 25 | 14 | 10 | 6 | 6 | 6 | 6 | 59.8 | 42.0 | 46.0 | 7 | 15 | 61.0 | 7 | 15 | 43.5 | 6 | 6.5 | 6 | 7.5 | 55.1 | 165 | 177 | 7 | 6.5 | 57.0 | 5 | 12 | 5 | 6 | 0 |
| 30 FT | 23 | 26 | 15 | 10 | 7 | 8 | 6 | 6 | 60.3 | 47.0 | 47.0 | 7 | 15 | 60.0 | 7 | 15 | 42.5 | 6 | 6 | 6 | 7.5 | 55.4 | 166 | 178 | 7 | 6.5 | 57.0 | 5 | 12 | 6 | 8 | 0 |
| 32 FT | 24 | 27 | 15 | 10 | 7 | 7.5 | 6 | 6 | 60.3 | 48.0 | 48.0 | 7 | 14 | 59.5 | 7 | 14 | 42.0 | 6 | 6 | 6 | 7.5 | 55.5 | 167 | 179 | 7 | 6 | 57.0 | 5 | 12 | 6 | 8 | 0 |
| 34 FT | 25 | 28 | 16 | 10 | 7 | 7.5 | 6 | 6 | 60.9 | 49.0 | 49.0 | 7 | 14 | 58.5 | 7 | 14 | 41.0 | 6 | 6 | 6 | 7.5 | 55.8 | 168 | 180 | 7 | 6 | 57.0 | 5 | 12 | 6 | 8 | 0 |
| 36 FT | 25 | 29 | 16 | 10 | 7 | 6.5 | 7 | 7.5 | 65.8 | 49.0 | 49.0 | 7 | 13 | 58.5 | 7 | 13 | 41.5 | 6 | 6 | 6 | 7.5 | 55.8 | 169 | 181 | 8 | 7.5 | 63.0 | 5 | 12 | 6 | 8 | 0 |
| 38 FT | 26 | 30 | 17 | 10 | 7 | 7 | 6 | 6 | 61.5 | 50.0 | 50.0 | 7 | 13 | 57.5 | 7 | 13 | 40.5 | 7 | 7.5 | 6 | 7 | 56.1 | 170 | 182 | 8 | 7.5 | 63.0 | 5 | 12 | 6 | 7.5 | 0 |
| 40 FT | 27 | 31 | 17 | 10 | 7 | 6.5 | 7 | 7.5 | 66.5 | 51.0 | 51.0 | 7 | 13 | 57.0 | 7 | 13 | 40.0 | 7 | 7.5 | 6 | 7 | 56.3 | 171 | 183 | 8 | 7 | 63.0 | 5 | 12 | 6 | 7.5 | 0 |
| 42 FT | 28 | 32 | 18 | 10 | 7 | 6.5 | 7 | 7.5 | 67.1 | 52.0 | 52.0 | 7 | 12 | 56.5 | 7 | 12 | 39.0 | 7 | 7.5 | 6 | 6.5 | 56.6 | 172 | 184 | 8 | 7 | 63.0 | 5 | 12 | 6 | 7 | 0 |
| 44 FT | 29 | 33 | 18 | 10 | 7 | 6.5 | 7 | 7 | 67.1 | 53.0 | 53.0 | 7 | 12 | 56.0 | 7 | 12 | 38.0 | 7 | 7.5 | 6 | 6.5 | 56.9 | 173 | 185 | 8 | 6.5 | 63.0 | 5 | 12 | 6 | 7 | 0 |
| 46 FT | 29 | 34 | 19 | 10 | 7 | 6 | 7 | 7.5 | 67.9 | 53.0 | 53.0 | 7 | 12 | 56.0 | 7 | 12 | 38.5 | 7 | 7.5 | 6 | 6.5 | 57.0 | 174 | 186 | 8 | 6.5 | 63.0 | 5 | 12 | 6 | 6.5 | 0 |
| 48 FT | 30 | 35 | 19 | 10 | 7 | 6 | 7 | 6.5 | 67.9 | 54.0 | 54.0 | 7 | 12 | 55.0 | 7 | 12 | 38.0 | 7 | 7 | 6 | 6.5 | 57.3 | 175 | 187 | 8 | 6.5 | 63.0 | 5 | 12 | 6 | 6.5 | 0 |
| 50 FT | 31 | 36 | 20 | 10 | 7 | 6 | 7 | 7 | 68.6 | 55.0 | 55.0 | 7 | 13 | 54.5 | 7 | 13 | 37.5 | 7 | 7 | 6 | 6.5 | 57.6 | 176 | 188 | 8 | 6 | 63.0 | 5 | 12 | 6 | 6.5 | 0 |

| SPAN (S) = 12 FT HEIGHT (HT) = 14 FT OR 15 FT | | | | | | | | | | | | | | | | | | | | | | | | | | | | | | | |
|---|---|---|---|---|---|---|---|---|---|---|---|---|---|---|---|---|---|---|---|---|---|---|---|---|---|---|---|---|---|---|---|
| DESIGN FILL | MEMBER THICKNESS | | | | TOP SLAB BARS | | | | | | | | | | | | BOTTOM SLAB BARS | | | | | | | | | | | WALL BARS | | | | |
| | | | | | A1 BARS | | J3 BARS | | | | | H1 BARS | | | H2 BARS | | | A2 BARS | | J4 BARS | | | | | H3 BARS | | | B1 BARS | | B2 BARS | | |
| | TS | BS | TX | TI | SIZE | SPA. | SIZE | SPA. | C1 | K2 HT=14' | K2 HT=15' | SIZE | SPA. | C5 | SIZE | SPA. | C6 | SIZE | SPA. | SIZE | SPA. | C4 | K3 HT=14' | K3 HT=15' | SIZE | SPA. | C7 | SIZE | SPA. | SIZE | SPA. | G1 |
| 1 FT | 14 | 12 | 10 | 12 | 5 | 6 | 5 | 6 | 60.0 | 34.0 | 34.0 | 5 | 12 | 119.0 | 5 | 12 | 32.5 | 5 | 7 | 6 | 6 | 98.8 | 176 | 188 | 6 | 7 | 58.0 | 5 | 12 | 5 | 8 | 12 |
| 2 FT | 15 | 12 | 10 | 12 | 6 | 8 | 6 | 8 | 67.0 | 35.0 | 39.0 | 6 | 16 | 126.0 | 6 | 16 | 40.0 | 5 | 6.5 | 6 | 6 | 92.5 | 176 | 188 | 6 | 6.5 | 57.0 | 5 | 12 | 5 | 8 | 12 |
| 4 FT | 11 | 13 | 10 | 12 | 5 | 6.5 | 6 | 6.5 | 62.0 | 35.0 | 35.0 | 6 | 16 | 121.0 | 6 | 16 | 37.5 | 5 | 6.5 | 6 | 6 | 89.8 | 177 | 189 | 6 | 7 | 57.0 | 5 | 12 | 5 | 7 | 12 |
| 6 FT | 11 | 13 | 11 | 12 | 5 | 7 | 6 | 7 | 83.8 | 31.0 | 35.0 | 6 | 15 | 61.0 | 6 | 15 | 36.0 | 5 | 6 | 6 | 6.5 | 81.4 | 177 | 189 | 6 | 6.5 | 56.0 | 5 | 12 | 5 | 7 | 12 |
| 8 FT | 11 | 13 | 12 | 12 | 5 | 7 | 6 | 7.5 | 73.9 | 35.0 | 35.0 | 6 | 13 | 57.5 | 6 | 13 | 35.0 | 5 | 6 | 6 | 6.5 | 76.1 | 177 | 189 | 7 | 7 | 58.0 | 5 | 12 | 5 | 7 | 0 |
| 10 FT | 12 | 14 | 12 | 12 | 5 | 7 | 6 | 7 | 71.4 | 36.0 | 36.0 | 6 | 13 | 56.0 | 6 | 13 | 35.0 | 6 | 8 | 6 | 6.5 | 74.1 | 178 | 190 | 7 | 7 | 58.0 | 5 | 12 | 5 | 7 | 0 |
| 12 FT | 13 | 15 | 13 | 12 | 5 | 6.5 | 6 | 7.5 | 68.8 | 37.0 | 37.0 | 6 | 13 | 55.0 | 6 | 13 | 34.5 | 6 | 7.5 | 6 | 6.5 | 71.6 | 179 | 191 | 7 | 7 | 57.5 | 5 | 12 | 5 | 6.5 | 0 |
| 14 FT | 14 | 16 | 13 | 12 | 5 | 6 | 6 | 6.5 | 67.3 | 38.0 | 38.0 | 6 | 12 | 54.5 | 6 | 12 | 34.5 | 6 | 6.5 | 6 | 6 | 70.1 | 180 | 192 | 7 | 7 | 57.5 | 5 | 12 | 5 | 6.5 | 0 |
| 16 FT | 15 | 18 | 14 | 12 | 6 | 8 | 6 | 6.5 | 72.1 | 39.0 | 39.0 | 6 | 12 | 60.0 | 6 | 12 | 40.5 | 6 | 7 | 6 | 6.5 | 69.5 | 182 | 194 | 6 | 6 | 54.5 | 5 | 12 | 5 | 6 | 0 |
| 18 FT | 17 | 19 | 14 | 12 | 6 | 7.5 | 6 | 6 | 72.1 | 41.0 | 41.0 | 6 | 12 | 59.5 | 6 | 12 | 40.5 | 6 | 6.5 | 6 | 6 | 68.1 | 183 | 195 | 6 | 6 | 54.5 | 5 | 12 | 5 | 6 | 0 |
| 20 FT | 18 | 20 | 15 | 12 | 6 | 7 | 6 | 6 | 71.5 | 42.0 | 42.0 | 6 | 12 | 59.0 | 6 | 12 | 40.0 | 6 | 6.5 | 6 | 6 | 67.1 | 184 | 196 | 7 | 7 | 57.5 | 5 | 12 | 6 | 8 | 0 |
| 22 FT | 19 | 22 | 16 | 12 | 6 | 6.5 | 6 | 6 | 71.4 | 43.0 | 43.0 | 6 | 12 | 58.5 | 6 | 12 | 40.0 | 6 | 6.5 | 6 | 6 | 67.4 | 186 | 198 | 7 | 7 | 57.5 | 5 | 12 | 6 | 8 | 0 |
| 24 FT | 20 | 23 | 16 | 12 | 6 | 6.5 | 6 | 6 | 71.3 | 44.0 | 44.0 | 6 | 12 | 58.0 | 6 | 12 | 40.0 | 6 | 6.5 | 6 | 6 | 67.1 | 187 | 199 | 7 | 7 | 57.5 | 5 | 12 | 6 | 8 | 0 |
| 26 FT | 21 | 24 | 17 | 12 | 6 | 6 | 6 | 6 | 71.4 | 45.0 | 45.0 | 6 | 12 | 57.0 | 6 | 12 | 39.5 | 6 | 6 | 6 | 6 | 67.1 | 188 | 200 | 7 | 7 | 57.5 | 5 | 12 | 6 | 7.5 | 0 |
| 28 FT | 22 | 25 | 17 | 12 | 6 | 6 | 6 | 6 | 69.1 | 46.0 | 46.0 | 7 | 15 | 61.5 | 7 | 15 | 44.0 | 6 | 6 | 6 | 6.5 | 64.9 | 189 | 201 | 7 | 6.5 | 57.5 | 5 | 12 | 6 | 7.5 | 0 |
| 30 FT | 23 | 26 | 17 | 12 | 6 | 6 | 7 | 7.5 | 74.1 | 47.0 | 47.0 | 7 | 15 | 61.0 | 7 | 15 | 43.0 | 6 | 6 | 6 | 6.5 | 64.9 | 190 | 202 | 7 | 6.5 | 57.5 | 5 | 12 | 6 | 7.5 | 0 |
| 32 FT | 23 | 27 | 17 | 12 | 7 | 7 | 7 | 6.5 | 74.0 | 47.0 | 47.0 | 7 | 14 | 61.0 | 7 | 14 | 44.0 | 6 | 6 | 6 | 6 | 65.0 | 191 | 203 | 7 | 6 | 57.5 | 5 | 12 | 6 | 7.5 | 0 |
| 34 FT | 24 | 28 | 18 | 12 | 7 | 7 | 7 | 7 | 74.5 | 48.0 | 48.0 | 7 | 14 | 60.0 | 7 | 14 | 43.0 | 6 | 6 | 6 | 6 | 65.3 | 192 | 204 | 7 | 6 | 57.5 | 5 | 12 | 6 | 7 | 0 |
| 36 FT | 25 | 29 | 19 | 12 | 7 | 7 | 7 | 7 | 75.0 | 49.0 | 49.0 | 7 | 14 | 59.0 | 7 | 14 | 42.0 | 7 | 7.5 | 6 | 6.5 | 65.5 | 193 | 205 | 8 | 7.5 | 63.5 | 5 | 12 | 6 | 6.5 | 0 |
| 38 FT | 26 | 30 | 20 | 12 | 7 | 7 | 7 | 7.5 | 75.5 | 50.0 | 50.0 | 7 | 13 | 58.0 | 7 | 13 | 41.5 | 7 | 7.5 | 6 | 6 | 65.9 | 194 | 206 | 8 | 7.5 | 63.5 | 5 | 12 | 6 | 6.5 | 0 |
| 40 FT | 27 | 31 | 20 | 12 | 7 | 7 | 7 | 6.5 | 75.6 | 51.0 | 51.0 | 7 | 13 | 57.5 | 7 | 13 | 40.5 | 7 | 7.5 | 6 | 6 | 66.0 | 195 | 207 | 8 | 7 | 63.5 | 5 | 12 | 6 | 6.5 | 0 |
| 42 FT | 28 | 32 | 21 | 12 | 7 | 6.5 | 7 | 7 | 76.3 | 52.0 | 52.0 | 7 | 12 | 57.0 | 7 | 12 | 39.5 | 7 | 7 | 6 | 6 | 66.4 | 196 | 208 | 8 | 7 | 63.5 | 5 | 12 | 6 | 6 | 0 |
| 44 FT | 28 | 33 | 22 | 12 | 7 | 6.5 | 7 | 7 | 76.6 | 52.0 | 58.0 | 7 | 12 | 57.0 | 7 | 12 | 40.0 | 7 | 7 | 7 | 7.5 | 69.6 | 197 | 209 | 8 | 6.5 | 63.5 | 5 | 12 | 6 | 6 | 0 |
| 46 FT | 29 | 34 | 22 | 12 | 7 | 6.5 | 7 | 6 | 76.8 | 53.0 | 59.0 | 7 | 12 | 56.5 | 7 | 12 | 39.0 | 7 | 7 | 7 | 7.5 | 69.9 | 198 | 210 | 8 | 6.5 | 63.5 | 5 | 12 | 6 | 6 | 0 |
| 48 FT | 30 | 35 | 24 | 12 | 7 | 6 | 7 | 7 | 78.0 | 54.0 | 60.0 | 7 | 12 | 56.0 | 7 | 12 | 39.0 | 7 | 7 | 7 | 7.5 | 70.4 | 199 | 211 | 8 | 6.5 | 64.0 | 5 | 12 | 6 | 6 | 0 |
| 50 FT | 30 | 36 | 24 | 12 | 7 | 6 | 7 | 6 | 78.0 | 54.0 | 60.0 | 7 | 12 | 56.0 | 7 | 12 | 39.0 | 7 | 7 | 7 | 7.5 | 70.5 | 200 | 212 | 8 | 6 | 64.0 | 5 | 12 | 7 | 8 | 0 |

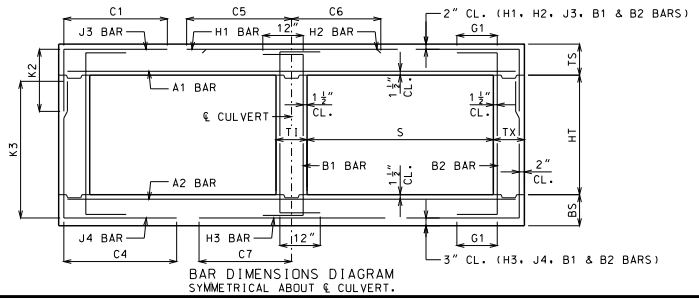


BAR DIMENSIONS DIAGRAM
SYMMETRICAL ABOUT ℄ CULVERT.

GENERAL NOTES:

IF DESIGN FILL IS BETWEEN TABULATED DESIGN FILLS, USE THE NEXT GREATER TABULATED DESIGN FILL, EXCEPT FOR DESIGN FILLS BETWEEN 2 FEET AND 4 FEET. FOR DESIGN FILLS BETWEEN 2 FEET AND 4 FEET USE THE GREATER MEMBER THICKNESS, AREA OF REINFORCEMENT AND BAR DIMENSIONS FROM THE 2 FEET AND 4 FEET TABULATED DESIGN FILLS. AREA OF REINFORCEMENT EQUALS BAR AREA PER FOOT SPACING.

SPECIAL DESIGNS ARE REQUIRED WHEN THE DESIGN FILL IS LESS THAN 1 FOOT OR GREATER THAN 50 FEET.

DIMENSIONS ARE IN INCHES UNLESS OTHERWISE SPECIFIED.

DESIGN FILLS ARE MEASURED FROM THE TOP OF TOP SLAB TO THE TOP OF EARTH FILL OR ROADWAY.

CULVERTS MEET STRENGTH AND SERVICEABILITY REQUIREMENTS FOR THE DESIGN VEHICULAR LIVE LOAD HL-93 MINUS THE LANE LOAD.


MISSOURI HIGHWAYS AND TRANSPORTATION COMMISSION
105 WEST CAPITOL
JEFFERSON CITY, MO 65102
1-888-ASK-MODOT (1-888-275-6636)


STATE OF MISSOURI
DENNIS W. HECKMANN
NUMBER PE-27141
PROFESSIONAL ENGINEER
THIS SHEET HAS BEEN SIGNED, SEALED AND DATED ELECTRONICALLY.

# CONCRETE DOUBLE BOX CULVERT

MEMBER THICKNESS
BAR SIZE, SPACING & DIMENSIONS

SPAN (S): 12 FEET
HEIGHT (HT): 12 THRU 15 FEET

DATE EFFECTIVE: 10/01/2011
DATE PREPARED: 9/8/2011

703.47

SHEET NO.
19 OF 27

IF A SEAL IS PRESENT ON THIS SHEET IT HAS BEEN ELECTRONICALLY SEALED AND DATED.

## SPAN (S) = 13 FT  HEIGHT (HT) = 7 FT OR 8 FT OR 9 FT

| DESIGN FILL | MEMBER THICKNESS | | | | TOP SLAB BARS | | | | | | | | | | | | BOTTOM SLAB BARS | | | | | | | | | | | WALL BARS | | | | |
|---|---|---|---|---|---|---|---|---|---|---|---|---|---|---|---|---|---|---|---|---|---|---|---|---|---|---|---|---|---|---|---|---|
| | | | | | A1 BARS | | J3 BARS | | | | | | H1 BARS | | | H2 BARS | | | A2 BARS | | J4 BARS | | | | | | H3 BARS | | | B1 BARS | | B2 BARS | |
| | | | | | | | | | | K2 | | | | | | | | | | | | K3 | | | | | | | | | |
| | TS | BS | TX | TI | SIZE | SPA. | SIZE | SPA. | C1 | HT=7′ | HT=8′ | HT=9′ | SIZE | SPA. | C5 | SIZE | SPA. | C6 | SIZE | SPA. | SIZE | SPA. | C4 | HT=7′ | HT=8′ | HT=9′ | SIZE | SPA. | C7 | SIZE | SPA. | SIZE | SPA. | G1 |
| 1 FT | 14 | 10 | 8 | 8 | 5 | 6 | 5 | 8.5 | 61.8 | 30.0 | 34.0 | 34.0 | 5 | 12 | 125.5 | 5 | 12 | 36.5 | 5 | 7 | 6 | 7 | 61.0 | 90 | 102 | 114 | 6 | 6 | 60.0 | 5 | 12 | 5 | 12 | 12 |
| 2 FT | 15 | 12 | 8 | 8 | 6 | 8 | 5 | 8 | 65.8 | 31.0 | 35.0 | 35.0 | 6 | 16 | 129.5 | 6 | 16 | 43.5 | 5 | 7 | 5 | 7 | 53.8 | 92 | 104 | 116 | 6 | 6.5 | 59.5 | 5 | 12 | 5 | 12 | 12 |
| 4 FT | 11 | 11 | 8 | 8 | 6 | 8 | 6 | 7 | 52.1 | 31.0 | 31.0 | 31.0 | 6 | 13 | 82.0 | 6 | 13 | 38.0 | 5 | 6.5 | 5 | 6 | 46.5 | 91 | 103 | 115 | 7 | 6.5 | 62.0 | 5 | 11 | 5 | 12 | 12 |
| 6 FT | 12 | 12 | 8 | 8 | 5 | 6.5 | 5 | 6.5 | 44.1 | 32.0 | 32.0 | 32.0 | 6 | 13 | 68.0 | 6 | 13 | 36.5 | 5 | 6 | 5 | 6.5 | 42.8 | 92 | 104 | 116 | 7 | 6.5 | 61.0 | 5 | 12 | 5 | 12 | 12 |
| 8 FT | 12 | 13 | 8 | 8 | 5 | 6 | 5 | 6 | 41.5 | 32.0 | 32.0 | 32.0 | 7 | 16 | 65.0 | 7 | 16 | 38.5 | 5 | 6 | 5 | 6.5 | 40.0 | 93 | 105 | 117 | 7 | 6.5 | 60.5 | 5 | 12 | 5 | 12 | 0 |
| 10 FT | 13 | 15 | 8 | 8 | 5 | 6 | 5 | 6 | 39.5 | 29.0 | 33.0 | 33.0 | 7 | 15 | 63.0 | 7 | 15 | 38.0 | 6 | 7.5 | 5 | 8 | 38.0 | 95 | 107 | 119 | 7 | 7 | 60.5 | 5 | 12 | 5 | 12 | 0 |
| 12 FT | 15 | 16 | 8 | 8 | 6 | 8 | 5 | 6.5 | 42.4 | 35.0 | 35.0 | 35.0 | 7 | 16 | 70.0 | 7 | 16 | 46.0 | 6 | 7 | 5 | 7.5 | 37.1 | 96 | 108 | 120 | 7 | 6.5 | 60.0 | 5 | 12 | 5 | 11 | 0 |
| 14 FT | 16 | 17 | 8 | 8 | 6 | 8 | 5 | 6 | 41.1 | 36.0 | 36.0 | 36.0 | 7 | 15 | 69.0 | 7 | 15 | 46.0 | 6 | 7 | 5 | 7 | 36.1 | 97 | 109 | 121 | 7 | 6.5 | 60.0 | 5 | 12 | 5 | 10 | 0 |
| 16 FT | 17 | 18 | 8 | 8 | 6 | 7.5 | 5 | 6 | 40.1 | 37.0 | 37.0 | 37.0 | 7 | 14 | 68.5 | 7 | 14 | 45.5 | 6 | 6 | 5 | 6.5 | 35.4 | 98 | 110 | 122 | 7 | 6.5 | 60.0 | 5 | 12 | 5 | 9.5 | 0 |
| 18 FT | 18 | 20 | 8 | 8 | 6 | 6.5 | 6 | 8 | 43.5 | 38.0 | 38.0 | 38.0 | 7 | 14 | 68.0 | 7 | 14 | 45.5 | 6 | 6.5 | 5 | 6 | 34.8 | 100 | 112 | 124 | 7 | 6.5 | 60.0 | 5 | 12 | 5 | 9.5 | 0 |
| 20 FT | 20 | 21 | 8 | 8 | 6 | 6.5 | 6 | 7.5 | 42.6 | 44.0 | 44.0 | 44.0 | 7 | 14 | 67.0 | 7 | 14 | 45.5 | 6 | 6 | 6 | 7.5 | 37.5 | 101 | 113 | 125 | 7 | 6.5 | 60.0 | 5 | 12 | 5 | 9 | 0 |
| 22 FT | 21 | 23 | 8 | 8 | 6 | 6 | 6 | 6.5 | 42.5 | 45.0 | 45.0 | 45.0 | 7 | 14 | 66.5 | 7 | 14 | 45.0 | 6 | 6 | 6 | 6.5 | 37.3 | 103 | 115 | 127 | 7 | 6.5 | 60.0 | 5 | 12 | 5 | 8 | 0 |
| 24 FT | 22 | 24 | 9 | 8 | 6 | 6 | 6 | 7.5 | 43.1 | 42.0 | 42.0 | 46.0 | 7 | 13 | 66.0 | 7 | 13 | 45.0 | 6 | 6 | 6 | 7 | 37.6 | 104 | 116 | 128 | 7 | 6.5 | 60.0 | 5 | 12 | 5 | 8.5 | 0 |
| 26 FT | 23 | 25 | 9 | 8 | 7 | 7.5 | 6 | 6.5 | 42.9 | 47.0 | 47.0 | 47.0 | 7 | 13 | 65.5 | 7 | 13 | 45.0 | 6 | 6 | 6 | 7 | 37.6 | 105 | 117 | 129 | 7 | 6.5 | 60.0 | 5 | 12 | 5 | 8.5 | 0 |
| 28 FT | 24 | 26 | 9 | 8 | 7 | 7.5 | 6 | 7 | 41.3 | 48.0 | 48.0 | 48.0 | 7 | 13 | 64.5 | 7 | 13 | 44.5 | 7 | 8 | 6 | 6.5 | 36.1 | 106 | 118 | 130 | 7 | 6.5 | 59.5 | 5 | 12 | 5 | 8.5 | 0 |
| 30 FT | 25 | 27 | 9 | 8 | 7 | 7 | 6 | 6 | 41.3 | 49.0 | 49.0 | 49.0 | 7 | 13 | 64.0 | 7 | 13 | 44.5 | 7 | 7.5 | 6 | 6.5 | 36.3 | 107 | 119 | 131 | 7 | 6 | 59.5 | 5 | 12 | 5 | 7.5 | 0 |
| 32 FT | 26 | 29 | 10 | 8 | 7 | 7 | 6 | 7 | 42.3 | 50.0 | 50.0 | 50.0 | 7 | 13 | 63.5 | 7 | 13 | 44.0 | 7 | 8 | 6 | 6.5 | 36.9 | 109 | 121 | 133 | 8 | 7.5 | 65.5 | 5 | 12 | 5 | 8 | 0 |
| 34 FT | 27 | 30 | 10 | 8 | 7 | 6.5 | 6 | 6.5 | 42.3 | 51.0 | 51.0 | 51.0 | 7 | 13 | 62.5 | 7 | 13 | 43.5 | 7 | 7.5 | 6 | 6.5 | 37.0 | 110 | 122 | 134 | 8 | 7.5 | 65.5 | 5 | 12 | 5 | 7.5 | 0 |
| 36 FT | 28 | 31 | 11 | 8 | 7 | 6.5 | 6 | 7.5 | 43.1 | 52.0 | 52.0 | 52.0 | 7 | 12 | 62.0 | 7 | 12 | 42.5 | 7 | 7.5 | 6 | 7 | 37.5 | 111 | 123 | 135 | 8 | 7 | 65.5 | 5 | 12 | 5 | 7.5 | 0 |
| 38 FT | 29 | 32 | 11 | 8 | 7 | 6 | 6 | 7 | 43.1 | 53.0 | 53.0 | 53.0 | 7 | 12 | 61.0 | 7 | 12 | 41.5 | 7 | 7.5 | 6 | 6.5 | 37.6 | 112 | 124 | 136 | 8 | 7 | 65.5 | 5 | 12 | 5 | 7.5 | 0 |
| 40 FT | 30 | 33 | 11 | 8 | 7 | 6 | 6 | 7 | 43.1 | 54.0 | 54.0 | 54.0 | 7 | 12 | 60.0 | 7 | 12 | 41.0 | 7 | 7 | 6 | 6.5 | 37.9 | 113 | 125 | 137 | 8 | 6.5 | 65.5 | 5 | 12 | 5 | 7 | 0 |
| 42 FT | 31 | 34 | 12 | 8 | 7 | 6 | 6 | 7.5 | 44.0 | 55.0 | 55.0 | 55.0 | 8 | 15 | 67.0 | 8 | 15 | 48.0 | 7 | 7 | 6 | 7 | 38.4 | 114 | 126 | 138 | 8 | 6.5 | 65.5 | 5 | 12 | 5 | 7 | 0 |
| 44 FT | 32 | 35 | 12 | 8 | 8 | 7.5 | 6 | 7 | 44.0 | 56.0 | 56.0 | 56.0 | 8 | 14 | 66.5 | 8 | 14 | 47.0 | 7 | 7 | 6 | 6.5 | 38.5 | 115 | 127 | 139 | 8 | 6.5 | 65.5 | 5 | 12 | 5 | 7 | 0 |
| 46 FT | 33 | 36 | 12 | 8 | 8 | 7 | 6 | 7 | 44.0 | 57.0 | 57.0 | 57.0 | 8 | 14 | 66.0 | 8 | 14 | 46.0 | 7 | 7 | 6 | 6.5 | 38.8 | 116 | 128 | 140 | 8 | 6 | 65.5 | 5 | 12 | 5 | 6.5 | 0 |
| 48 FT | 33 | 37 | 12 | 8 | 8 | 6.5 | 6 | 7 | 44.0 | 57.0 | 57.0 | 57.0 | 8 | 13 | 66.0 | 8 | 13 | 46.5 | 7 | 6.5 | 6 | 6.5 | 38.8 | 117 | 129 | 141 | 8 | 6 | 65.5 | 5 | 12 | 5 | 6.5 | 0 |
| 50 FT | 34 | 38 | 12 | 8 | 8 | 7 | 6 | 6 | 44.0 | 58.0 | 58.0 | 58.0 | 8 | 14 | 65.0 | 8 | 14 | 46.0 | 7 | 6.5 | 6 | 6 | 39.0 | 118 | 130 | 142 | 8 | 6 | 65.5 | 5 | 12 | 5 | 6 | 0 |

## SPAN (S) = 13 FT  HEIGHT (HT) = 10 FT OR 11 FT OR 12 FT

| DESIGN FILL | MEMBER THICKNESS | | | | TOP SLAB BARS | | | | | | | | | | | | BOTTOM SLAB BARS | | | | | | | | | | | WALL BARS | | | | |
|---|---|---|---|---|---|---|---|---|---|---|---|---|---|---|---|---|---|---|---|---|---|---|---|---|---|---|---|---|---|---|---|---|
| | | | | | A1 BARS | | J3 BARS | | | | | | H1 BARS | | | H2 BARS | | | A2 BARS | | J4 BARS | | | | | | H3 BARS | | | B1 BARS | | B2 BARS | |
| | | | | | | | | | | K2 | | | | | | | | | | | | K3 | | | | | | | | | |
| | TS | BS | TX | TI | SIZE | SPA. | SIZE | SPA. | C1 | HT=10′ | HT=11′ | HT=12′ | SIZE | SPA. | C5 | SIZE | SPA. | C6 | SIZE | SPA. | SIZE | SPA. | C4 | HT=10′ | HT=11′ | HT=12′ | SIZE | SPA. | C7 | SIZE | SPA. | SIZE | SPA. | G1 |
| 1 FT | 14 | 11 | 9 | 10 | 5 | 6 | 5 | 7.5 | 62.6 | 34.0 | 34.0 | 34.0 | 5 | 12 | 126.5 | 5 | 12 | 36.5 | 5 | 6.5 | 6 | 6.5 | 81.1 | 127 | 139 | 151 | 6 | 6.5 | 60.5 | 5 | 11.5 | 5 | 9.5 | 12 |
| 2 FT | 15 | 12 | 9 | 10 | 6 | 8 | 5 | 7.5 | 66.6 | 35.0 | 35.0 | 35.0 | 6 | 16 | 130.5 | 6 | 16 | 43.5 | 5 | 6.5 | 6 | 6.5 | 75.6 | 128 | 140 | 152 | 6 | 6.5 | 60.0 | 5 | 12 | 5 | 9 | 12 |
| 4 FT | 11 | 11 | 9 | 10 | 6 | 8 | 6 | 7 | 78.5 | 35.0 | 35.0 | 35.0 | 6 | 13 | 84.0 | 6 | 13 | 38.0 | 5 | 6.5 | 6 | 6 | 66.3 | 127 | 139 | 151 | 7 | 6.5 | 62.0 | 5 | 9 | 5 | 8.5 | 12 |
| 6 FT | 12 | 12 | 9 | 10 | 5 | 6.5 | 6 | 6.5 | 63.6 | 32.0 | 36.0 | 36.0 | 6 | 13 | 67.0 | 6 | 13 | 37.0 | 5 | 6 | 6 | 6 | 61.5 | 128 | 140 | 152 | 7 | 6.5 | 61.5 | 5 | 12 | 5 | 8.5 | 12 |
| 8 FT | 12 | 14 | 9 | 10 | 5 | 6 | 6 | 6.5 | 58.3 | 32.0 | 32.0 | 36.0 | 6 | 12 | 61.5 | 6 | 12 | 36.0 | 6 | 8 | 6 | 6.5 | 59.1 | 130 | 142 | 154 | 7 | 7 | 61.0 | 5 | 12 | 5 | 8.5 | 0 |
| 10 FT | 13 | 15 | 9 | 10 | 5 | 6 | 6 | 6 | 55.4 | 33.0 | 33.0 | 37.0 | 7 | 15 | 63.0 | 7 | 15 | 38.5 | 6 | 7.5 | 6 | 6.5 | 56.6 | 131 | 143 | 155 | 7 | 7 | 61.0 | 5 | 12 | 5 | 8.5 | 0 |
| 12 FT | 14 | 16 | 10 | 10 | 5 | 6 | 6 | 6.5 | 53.6 | 34.0 | 34.0 | 38.0 | 7 | 15 | 61.5 | 7 | 15 | 38.5 | 6 | 7 | 6 | 7 | 54.6 | 132 | 144 | 156 | 7 | 6.5 | 60.5 | 5 | 12 | 5 | 8 | 0 |
| 14 FT | 16 | 17 | 10 | 10 | 6 | 8 | 6 | 7 | 58.0 | 36.0 | 36.0 | 40.0 | 7 | 15 | 69.0 | 7 | 15 | 46.5 | 6 | 7 | 6 | 6.5 | 53.3 | 133 | 145 | 157 | 7 | 6.5 | 60.5 | 5 | 12 | 5 | 8 | 0 |
| 16 FT | 17 | 19 | 11 | 10 | 6 | 7.5 | 6 | 7 | 57.5 | 37.0 | 37.0 | 41.0 | 7 | 15 | 68.5 | 7 | 15 | 46.0 | 6 | 6.5 | 6 | 8 | 52.4 | 135 | 147 | 159 | 7 | 7 | 60.5 | 5 | 12 | 5 | 7.5 | 0 |
| 18 FT | 18 | 20 | 12 | 10 | 6 | 7 | 6 | 7.5 | 57.4 | 38.0 | 38.0 | 38.0 | 7 | 14 | 68.0 | 7 | 14 | 46.0 | 6 | 6.5 | 5 | 6 | 48.8 | 136 | 148 | 160 | 7 | 6.5 | 60.5 | 5 | 12 | 5 | 7 | 0 |
| 20 FT | 19 | 21 | 12 | 10 | 6 | 6.5 | 6 | 7 | 56.6 | 39.0 | 39.0 | 43.0 | 7 | 14 | 67.5 | 7 | 14 | 46.0 | 6 | 6 | 6 | 8 | 51.1 | 137 | 149 | 161 | 7 | 6.5 | 60.5 | 5 | 12 | 5 | 7 | 0 |
| 22 FT | 21 | 23 | 12 | 10 | 6 | 6 | 6 | 6.5 | 56.1 | 41.0 | 41.0 | 45.0 | 7 | 14 | 66.5 | 7 | 14 | 45.5 | 6 | 6 | 6 | 7.5 | 51.0 | 139 | 151 | 163 | 7 | 6.5 | 60.5 | 5 | 12 | 5 | 7 | 0 |
| 24 FT | 22 | 24 | 13 | 10 | 6 | 6 | 6 | 7 | 56.5 | 42.0 | 42.0 | 46.0 | 7 | 14 | 66.0 | 7 | 14 | 45.5 | 6 | 6 | 6 | 8 | 51.1 | 140 | 152 | 164 | 7 | 6.5 | 60.5 | 5 | 12 | 5 | 6.5 | 0 |
| 26 FT | 23 | 25 | 13 | 10 | 7 | 7.5 | 6 | 6.5 | 56.3 | 43.0 | 43.0 | 47.0 | 7 | 14 | 65.5 | 7 | 14 | 45.5 | 7 | 7.5 | 6 | 7.5 | 51.0 | 141 | 153 | 165 | 7 | 6.5 | 60.5 | 5 | 12 | 5 | 6.5 | 0 |
| 28 FT | 24 | 26 | 13 | 10 | 7 | 7.5 | 6 | 6.5 | 54.4 | 44.0 | 44.0 | 48.0 | 7 | 14 | 64.5 | 7 | 14 | 45.0 | 7 | 7.5 | 6 | 8 | 49.1 | 142 | 154 | 166 | 7 | 6.5 | 60.0 | 5 | 12 | 5 | 6.5 | 0 |
| 30 FT | 25 | 28 | 13 | 10 | 7 | 7 | 6 | 6 | 54.4 | 45.0 | 45.0 | 49.0 | 7 | 14 | 64.0 | 7 | 14 | 45.0 | 7 | 8 | 6 | 8 | 49.3 | 144 | 156 | 168 | 7 | 6 | 60.0 | 5 | 12 | 5 | 6.5 | 0 |
| 32 FT | 26 | 29 | 14 | 10 | 7 | 7 | 6 | 6.5 | 55.1 | 46.0 | 50.0 | 50.0 | 7 | 13 | 63.5 | 7 | 13 | 44.0 | 7 | 7.5 | 6 | 8.5 | 49.8 | 145 | 157 | 169 | 8 | 7.5 | 66.0 | 5 | 12 | 5 | 6 | 0 |
| 34 FT | 27 | 30 | 14 | 10 | 7 | 6.5 | 6 | 6 | 55.0 | 47.0 | 51.0 | 51.0 | 7 | 13 | 62.5 | 7 | 13 | 43.0 | 7 | 7.5 | 6 | 8 | 49.8 | 146 | 158 | 170 | 8 | 7.5 | 66.0 | 5 | 12 | 5 | 6 | 0 |
| 36 FT | 28 | 31 | 15 | 10 | 7 | 6.5 | 6 | 6.5 | 55.8 | 52.0 | 52.0 | 52.0 | 7 | 12 | 61.5 | 7 | 12 | 42.5 | 7 | 7 | 6 | 7.5 | 50.3 | 147 | 159 | 171 | 8 | 7 | 66.0 | 5 | 12 | 6 | 8 | 0 |
| 38 FT | 29 | 32 | 15 | 10 | 7 | 6 | 6 | 6 | 55.6 | 53.0 | 53.0 | 53.0 | 7 | 12 | 60.5 | 7 | 12 | 41.5 | 7 | 7 | 6 | 7.5 | 50.4 | 148 | 160 | 172 | 8 | 7 | 66.0 | 5 | 12 | 6 | 8 | 0 |
| 40 FT | 30 | 33 | 16 | 10 | 7 | 6 | 6 | 6 | 56.4 | 54.0 | 54.0 | 54.0 | 7 | 12 | 59.5 | 7 | 12 | 41.0 | 7 | 6.5 | 6 | 7 | 50.8 | 149 | 161 | 173 | 8 | 6.5 | 66.0 | 5 | 12 | 6 | 8 | 0 |
| 42 FT | 31 | 35 | 16 | 10 | 7 | 6 | 6 | 6 | 56.5 | 55.0 | 55.0 | 55.0 | 8 | 15 | 67.0 | 8 | 15 | 48.0 | 7 | 7 | 6 | 6.5 | 51.0 | 151 | 163 | 175 | 8 | 6.5 | 66.0 | 5 | 12 | 6 | 8 | 0 |
| 44 FT | 31 | 35 | 16 | 10 | 8 | 7 | 7 | 7.5 | 61.4 | 55.0 | 55.0 | 55.0 | 8 | 14 | 67.0 | 8 | 14 | 48.5 | 7 | 6 | 6 | 6.5 | 50.9 | 151 | 163 | 175 | 8 | 6.5 | 66.0 | 5 | 12 | 6 | 8 | 0 |
| 46 FT | 32 | 36 | 17 | 10 | 8 | 7.5 | 6 | 6 | 57.1 | 56.0 | 56.0 | 56.0 | 8 | 14 | 66.5 | 8 | 14 | 47.5 | 7 | 6 | 6 | 6.5 | 51.4 | 152 | 164 | 176 | 8 | 6 | 66.0 | 5 | 12 | 6 | 7.5 | 0 |
| 48 FT | 33 | 37 | 17 | 10 | 8 | 7 | 7 | 7.5 | 62.1 | 57.0 | 57.0 | 57.0 | 8 | 14 | 66.0 | 8 | 14 | 47.0 | 7 | 6 | 6 | 6.5 | 51.5 | 153 | 165 | 177 | 8 | 6 | 66.0 | 5 | 12 | 6 | 7.5 | 0 |
| 50 FT | 34 | 38 | 17 | 10 | 8 | 7 | 7 | 7 | 62.1 | 58.0 | 58.0 | 58.0 | 8 | 14 | 65.5 | 8 | 14 | 46.5 | 7 | 6 | 6 | 6 | 51.8 | 154 | 166 | 178 | 8 | 6 | 66.0 | 5 | 12 | 6 | 7.5 | 0 |

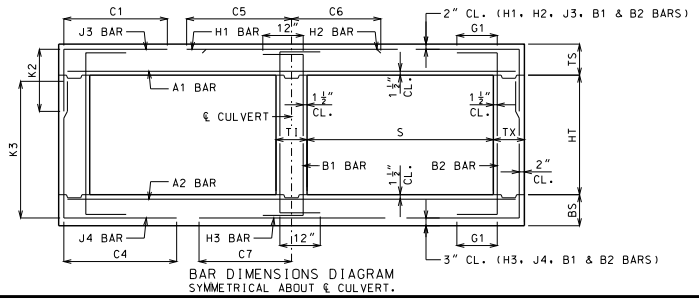


BAR DIMENSIONS DIAGRAM
SYMMETRICAL ABOUT ℄ CULVERT.

GENERAL NOTES:

IF DESIGN FILL IS BETWEEN TABULATED DESIGN FILLS, USE THE NEXT GREATER TABULATED DESIGN FILL, EXCEPT FOR DESIGN FILLS BETWEEN 2 FEET AND 4 FEET. FOR DESIGN FILLS BETWEEN 2 FEET AND 4 FEET USE THE GREATER MEMBER THICKNESS, AREA OF REINFORCEMENT AND BAR DIMENSIONS FROM THE 2 FEET AND 4 FEET TABULATED DESIGN FILLS. AREA OF REINFORCEMENT EQUALS BAR AREA PER FOOT SPACING.

SPECIAL DESIGNS ARE REQUIRED WHEN THE DESIGN FILL IS LESS THAN 1 FOOT OR GREATER THAN 50 FEET.

DIMENSIONS ARE IN INCHES UNLESS OTHERWISE SPECIFIED.

DESIGN FILLS ARE MEASURED FROM THE TOP OF TOP SLAB TO THE TOP OF EARTH FILL OR ROADWAY.

CULVERTS MEET STRENGTH AND SERVICEABILITY REQUIREMENTS FOR THE DESIGN VEHICULAR LIVE LOAD HL-93 MINUS THE LANE LOAD.


MISSOURI HIGHWAYS AND TRANSPORTATION COMMISSION
105 WEST CAPITOL
JEFFERSON CITY, MO 65102
1-888-ASK-MODOT (1-888-275-6636)


STATE OF MISSOURI
DENNIS W. HECKMAN
NUMBER PE-27141
PROFESSIONAL ENGINEER
THIS SHEET HAS BEEN SIGNED, SEALED AND DATED ELECTRONICALLY.

# CONCRETE DOUBLE BOX CULVERT

MEMBER THICKNESS
BAR SIZE, SPACING & DIMENSIONS

SPAN (S): 13 FEET
HEIGHT (HT): 7 THRU 12 FEET

DATE EFFECTIVE: 10/01/2011
DATE PREPARED: 9/8/2011

703.47

SHEET NO.
20 OF 27

IF A SEAL IS PRESENT ON THIS SHEET IT HAS BEEN ELECTRONICALLY SEALED AND DATED.

SPAN (S) = 13 FT  HEIGHT (HT) = 13 FT OR 14 FT

| DESIGN FILL | MEMBER THICKNESS | | | | TOP SLAB BARS | | | | | | | | | | | | BOTTOM SLAB BARS | | | | | | | | | | WALL BARS | | | | |
|---|---|---|---|---|---|---|---|---|---|---|---|---|---|---|---|---|---|---|---|---|---|---|---|---|---|---|---|---|---|---|---|
| | | | | | A1 BARS | | J3 BARS | | | | | H1 BARS | | | H2 BARS | | | A2 BARS | | J4 BARS | | | | | H3 BARS | | | B1 BARS | | B2 BARS | | |
| | | | | | | | | | | K2 | | | | | | | | | | | K3 | | | | | | | | | | |
| | TS | BS | TX | TI | SIZE | SPA. | SIZE | SPA. | C1 | HT=13' | HT=14' | SIZE | SPA. | C5 | SIZE | SPA. | C6 | SIZE | SPA. | SIZE | SPA. | C4 | HT=13' | HT=14' | SIZE | SPA. | C7 | SIZE | SPA. | SIZE | SPA. | G1 |
| 1 FT | 14 | 11 | 11 | 11 | 5 | 6 | 5 | 7 | 64.1 | 34.0 | 34.0 | 5 | 12 | 127.5 | 5 | 12 | 36.5 | 5 | 6.5 | 5 | 6 | 85.3 | 163 | 175 | 6 | 6 | 60.5 | 5 | 12 | 5 | 8 | 12 |
| 2 FT | 15 | 12 | 11 | 11 | 6 | 8 | 5 | 7 | 68.1 | 35.0 | 35.0 | 6 | 16 | 131.5 | 6 | 16 | 43.5 | 5 | 6.5 | 5 | 6 | 80.9 | 164 | 176 | 6 | 6.5 | 60.0 | 5 | 12 | 5 | 7.5 | 12 |
| 4 FT | 11 | 12 | 11 | 11 | 5 | 6 | 5 | 6 | 92.9 | 31.0 | 31.0 | 6 | 13 | 82.5 | 6 | 13 | 38.0 | 5 | 6 | 5 | 6 | 75.5 | 164 | 176 | 7 | 7 | 62.5 | 5 | 11.5 | 5 | 7.5 | 12 |
| 6 FT | 11 | 12 | 11 | 11 | 5 | 6 | 6 | 7.5 | 74.6 | 31.0 | 35.0 | 6 | 12 | 64.5 | 6 | 12 | 37.0 | 5 | 6 | 6 | 6.5 | 72.1 | 164 | 176 | 7 | 6.5 | 61.5 | 5 | 12 | 5 | 7.5 | 12 |
| 8 FT | 12 | 14 | 11 | 11 | 5 | 6.5 | 6 | 7.5 | 68.5 | 32.0 | 36.0 | 6 | 12 | 61.5 | 6 | 12 | 36.5 | 6 | 8 | 6 | 7 | 70.1 | 166 | 178 | 7 | 7 | 61.5 | 5 | 12 | 5 | 7.5 | 0 |
| 10 FT | 13 | 15 | 11 | 11 | 5 | 6.5 | 6 | 7 | 65.9 | 37.0 | 37.0 | 6 | 12 | 59.5 | 6 | 12 | 36.0 | 6 | 7.5 | 6 | 6.5 | 67.4 | 167 | 179 | 7 | 6.5 | 61.0 | 5 | 12 | 5 | 7.5 | 0 |
| 12 FT | 14 | 16 | 12 | 11 | 5 | 6 | 6 | 7 | 64.0 | 38.0 | 38.0 | 7 | 15 | 61.5 | 7 | 15 | 38.5 | 6 | 7 | 6 | 7 | 65.5 | 168 | 180 | 7 | 6.5 | 60.5 | 5 | 12 | 5 | 7 | 0 |
| 14 FT | 15 | 17 | 12 | 11 | 6 | 7.5 | 6 | 6.5 | 68.5 | 39.0 | 39.0 | 7 | 15 | 69.0 | 7 | 15 | 46.5 | 6 | 6.5 | 6 | 6 | 64.1 | 169 | 181 | 7 | 6.5 | 60.5 | 5 | 12 | 5 | 7 | 0 |
| 16 FT | 17 | 19 | 13 | 11 | 6 | 7.5 | 6 | 6.5 | 68.0 | 41.0 | 41.0 | 7 | 15 | 68.0 | 7 | 15 | 46.5 | 6 | 6.5 | 6 | 7 | 63.4 | 171 | 183 | 7 | 6.5 | 60.5 | 5 | 12 | 5 | 6.5 | 0 |
| 18 FT | 18 | 20 | 13 | 11 | 6 | 7 | 6 | 6 | 66.9 | 42.0 | 42.0 | 7 | 15 | 67.5 | 7 | 15 | 46.5 | 6 | 6 | 6 | 6 | 62.4 | 172 | 184 | 7 | 6.5 | 60.5 | 5 | 12 | 5 | 6.5 | 0 |
| 20 FT | 19 | 22 | 14 | 11 | 6 | 6.5 | 6 | 6 | 66.5 | 43.0 | 43.0 | 7 | 14 | 67.0 | 7 | 14 | 46.0 | 6 | 6 | 6 | 7 | 62.0 | 174 | 186 | 7 | 7 | 60.5 | 5 | 12 | 5 | 6 | 0 |
| 22 FT | 20 | 23 | 14 | 11 | 6 | 6 | 7 | 8 | 70.6 | 44.0 | 44.0 | 7 | 14 | 66.5 | 7 | 14 | 46.0 | 6 | 6 | 6 | 6 | 61.3 | 175 | 187 | 7 | 6.5 | 60.5 | 5 | 12 | 5 | 6 | 0 |
| 24 FT | 22 | 25 | 15 | 11 | 6 | 6 | 6 | 6 | 66.1 | 46.0 | 46.0 | 7 | 15 | 65.5 | 7 | 15 | 45.5 | 6 | 6 | 6 | 7 | 61.5 | 177 | 189 | 7 | 6.5 | 60.5 | 5 | 12 | 6 | 8 | 0 |
| 26 FT | 23 | 25 | 15 | 11 | 7 | 7.5 | 7 | 7.5 | 70.6 | 47.0 | 47.0 | 7 | 14 | 65.0 | 7 | 14 | 45.5 | 7 | 7 | 6 | 6 | 60.9 | 177 | 189 | 7 | 6.5 | 60.5 | 5 | 12 | 6 | 8 | 0 |
| 28 FT | 24 | 27 | 16 | 11 | 7 | 7.5 | 7 | 8 | 71.0 | 48.0 | 48.0 | 7 | 14 | 64.5 | 7 | 14 | 45.0 | 7 | 8 | 6 | 7 | 61.3 | 179 | 191 | 7 | 6 | 60.5 | 5 | 12 | 6 | 8 | 0 |
| 30 FT | 25 | 28 | 16 | 11 | 7 | 7 | 7 | 8 | 68.5 | 49.0 | 49.0 | 7 | 14 | 63.5 | 7 | 14 | 44.0 | 7 | 7.5 | 6 | 7 | 58.9 | 180 | 192 | 7 | 6 | 60.5 | 5 | 12 | 6 | 8 | 0 |
| 32 FT | 26 | 29 | 16 | 11 | 7 | 7 | 7 | 7.5 | 68.4 | 50.0 | 50.0 | 7 | 13 | 62.5 | 7 | 13 | 43.5 | 7 | 7.5 | 6 | 6.5 | 58.9 | 181 | 193 | 8 | 7.5 | 66.5 | 5 | 12 | 6 | 8 | 0 |
| 34 FT | 27 | 30 | 17 | 11 | 7 | 6.5 | 7 | 7.5 | 69.0 | 51.0 | 51.0 | 7 | 13 | 61.5 | 7 | 13 | 42.5 | 7 | 7.5 | 6 | 7 | 59.1 | 182 | 194 | 8 | 7.5 | 66.5 | 5 | 12 | 6 | 7.5 | 0 |
| 36 FT | 27 | 31 | 17 | 11 | 7 | 6 | 7 | 6.5 | 68.9 | 51.0 | 51.0 | 7 | 12 | 61.5 | 7 | 12 | 43.5 | 7 | 7 | 6 | 7 | 59.1 | 183 | 195 | 8 | 7 | 66.5 | 5 | 12 | 6 | 7.5 | 0 |
| 38 FT | 28 | 33 | 18 | 11 | 7 | 6 | 7 | 7 | 69.8 | 52.0 | 52.0 | 7 | 12 | 60.0 | 7 | 12 | 42.5 | 7 | 7 | 6 | 6.5 | 59.6 | 185 | 197 | 8 | 6.5 | 66.5 | 5 | 12 | 6 | 7 | 0 |
| 40 FT | 29 | 34 | 19 | 11 | 7 | 6 | 7 | 7 | 70.4 | 53.0 | 53.0 | 7 | 12 | 59.5 | 7 | 12 | 41.5 | 7 | 7 | 6 | 6.5 | 60.0 | 186 | 198 | 8 | 6.5 | 66.5 | 5 | 12 | 6 | 6.5 | 0 |
| 42 FT | 30 | 35 | 19 | 11 | 7 | 6 | 7 | 6.5 | 70.4 | 54.0 | 54.0 | 7 | 12 | 59.0 | 7 | 12 | 40.5 | 7 | 7 | 6 | 6.5 | 60.1 | 187 | 199 | 8 | 6.5 | 66.5 | 5 | 12 | 6 | 6.5 | 0 |
| 44 FT | 31 | 36 | 20 | 11 | 7 | 6 | 7 | 7 | 71.0 | 55.0 | 55.0 | 8 | 15 | 66.5 | 8 | 15 | 47.5 | 7 | 7 | 6 | 6 | 60.5 | 188 | 200 | 8 | 6 | 66.5 | 5 | 12 | 6 | 6.5 | 0 |
| 46 FT | 32 | 37 | 21 | 11 | 8 | 7.5 | 7 | 7 | 71.8 | 56.0 | 56.0 | 8 | 15 | 66.0 | 8 | 15 | 47.0 | 7 | 6.5 | 6 | 6 | 60.8 | 189 | 201 | 8 | 6 | 66.5 | 5 | 12 | 6 | 6 | 0 |
| 48 FT | 32 | 38 | 21 | 11 | 8 | 7 | 7 | 6 | 71.8 | 56.0 | 56.0 | 8 | 14 | 66.0 | 8 | 14 | 47.0 | 7 | 6.5 | 6 | 6 | 60.9 | 190 | 202 | 8 | 6 | 66.5 | 5 | 12 | 6 | 6 | 0 |
| 50 FT | 33 | 39 | 22 | 11 | 8 | 7 | 7 | 6.5 | 72.5 | 57.0 | 57.0 | 8 | 15 | 65.5 | 8 | 15 | 47.0 | 7 | 6.5 | 6 | 6 | 61.3 | 191 | 203 | 8 | 6 | 66.5 | 5 | 12 | 6 | 6 | 0 |

SPAN (S) = 13 FT  HEIGHT (HT) = 15 FT OR 16 FT

| DESIGN FILL | MEMBER THICKNESS | | | | TOP SLAB BARS | | | | | | | | | | | | BOTTOM SLAB BARS | | | | | | | | | | WALL BARS | | | | |
|---|---|---|---|---|---|---|---|---|---|---|---|---|---|---|---|---|---|---|---|---|---|---|---|---|---|---|---|---|---|---|---|
| | | | | | A1 BARS | | J3 BARS | | | | | H1 BARS | | | H2 BARS | | | A2 BARS | | J4 BARS | | | | | H3 BARS | | | B1 BARS | | B2 BARS | | |
| | | | | | | | | | | K2 | | | | | | | | | | | K3 | | | | | | | | | | |
| | TS | BS | TX | TI | SIZE | SPA. | SIZE | SPA. | C1 | HT=15' | HT=16' | SIZE | SPA. | C5 | SIZE | SPA. | C6 | SIZE | SPA. | SIZE | SPA. | C4 | HT=15' | HT=16' | SIZE | SPA. | C7 | SIZE | SPA. | SIZE | SPA. | G1 |
| 1 FT | 14 | 12 | 12 | 13 | 5 | 6 | 5 | 6 | 65.0 | 34.0 | 34.0 | 5 | 12 | 128.5 | 5 | 12 | 36.0 | 5 | 6.5 | 6 | 7 | 99.8 | 188 | 200 | 6 | 6.5 | 61.0 | 5 | 12 | 5 | 7 | 12 |
| 2 FT | 15 | 13 | 12 | 13 | 6 | 8 | 6 | 8.5 | 72.0 | 35.0 | 39.0 | 6 | 16 | 135.5 | 6 | 16 | 43.5 | 5 | 6.5 | 6 | 7 | 96.4 | 189 | 201 | 6 | 6.5 | 60.5 | 5 | 12 | 5 | 7 | 12 |
| 4 FT | 11 | 13 | 12 | 13 | 5 | 6 | 6 | 7 | 115.0 | 35.0 | 35.0 | 6 | 14 | 81.0 | 6 | 14 | 38.5 | 5 | 6 | 6 | 6.5 | 91.6 | 189 | 201 | 6 | 6 | 60.5 | 5 | 12 | 5 | 7 | 12 |
| 6 FT | 11 | 13 | 12 | 13 | 5 | 6.5 | 6 | 6.5 | 84.8 | 35.0 | 35.0 | 6 | 13 | 63.5 | 6 | 13 | 37.5 | 5 | 6 | 6 | 6 | 84.8 | 189 | 201 | 7 | 7 | 62.0 | 5 | 12 | 5 | 6.5 | 12 |
| 8 FT | 12 | 14 | 13 | 13 | 5 | 6.5 | 6 | 7 | 78.8 | 36.0 | 36.0 | 6 | 13 | 61.0 | 6 | 13 | 37.0 | 6 | 8 | 6 | 6.5 | 80.6 | 190 | 202 | 7 | 7 | 61.5 | 5 | 12 | 5 | 6.5 | 0 |
| 10 FT | 13 | 15 | 13 | 13 | 5 | 6.5 | 6 | 7 | 75.9 | 37.0 | 37.0 | 6 | 12 | 59.5 | 6 | 12 | 36.5 | 6 | 7.5 | 6 | 6.5 | 78.4 | 191 | 203 | 7 | 6.5 | 61.0 | 5 | 12 | 5 | 6.5 | 0 |
| 12 FT | 14 | 16 | 14 | 13 | 5 | 6 | 6 | 7 | 72.9 | 38.0 | 38.0 | 6 | 12 | 58.5 | 6 | 12 | 36.5 | 6 | 6.5 | 6 | 6.5 | 75.6 | 192 | 204 | 7 | 6.5 | 61.0 | 5 | 12 | 5 | 6 | 0 |
| 14 FT | 15 | 18 | 14 | 13 | 6 | 8 | 6 | 6 | 77.1 | 39.0 | 39.0 | 7 | 16 | 69.0 | 7 | 16 | 47.0 | 6 | 6.5 | 6 | 6 | 75.3 | 194 | 206 | 7 | 7 | 61.0 | 5 | 12 | 5 | 6 | 0 |
| 16 FT | 16 | 19 | 15 | 13 | 6 | 7.5 | 6 | 6 | 76.0 | 40.0 | 40.0 | 7 | 15 | 68.0 | 7 | 15 | 47.0 | 6 | 6.5 | 6 | 6 | 73.3 | 195 | 207 | 7 | 6.5 | 61.0 | 5 | 12 | 6 | 8 | 0 |
| 18 FT | 18 | 20 | 16 | 13 | 6 | 7 | 6 | 6 | 76.0 | 42.0 | 42.0 | 7 | 15 | 67.5 | 7 | 15 | 47.0 | 6 | 6 | 6 | 6 | 71.6 | 196 | 208 | 7 | 6.5 | 61.0 | 5 | 12 | 6 | 8 | 0 |
| 20 FT | 19 | 22 | 16 | 13 | 6 | 6.5 | 7 | 8 | 80.4 | 43.0 | 49.0 | 7 | 15 | 67.5 | 7 | 15 | 47.0 | 6 | 6 | 7 | 7.5 | 74.5 | 198 | 210 | 7 | 7 | 61.0 | 5 | 12 | 6 | 8 | 0 |
| 22 FT | 20 | 23 | 17 | 13 | 6 | 6.5 | 7 | 8 | 79.9 | 44.0 | 50.0 | 7 | 14 | 67.0 | 7 | 14 | 46.5 | 6 | 6 | 7 | 7.5 | 73.9 | 199 | 211 | 7 | 6.5 | 61.0 | 5 | 12 | 6 | 7.5 | 0 |
| 24 FT | 21 | 24 | 17 | 13 | 6 | 6 | 7 | 7.5 | 79.6 | 45.0 | 51.0 | 7 | 14 | 66.5 | 7 | 14 | 46.5 | 7 | 7 | 7 | 7 | 73.6 | 200 | 212 | 7 | 6.5 | 61.0 | 5 | 12 | 6 | 7.5 | 0 |
| 26 FT | 23 | 26 | 18 | 13 | 7 | 7.5 | 7 | 7.5 | 80.1 | 47.0 | 53.0 | 7 | 15 | 65.5 | 7 | 15 | 46.0 | 7 | 8 | 7 | 8 | 73.9 | 202 | 214 | 7 | 6.5 | 61.0 | 5 | 12 | 6 | 7 | 0 |
| 28 FT | 23 | 27 | 19 | 13 | 7 | 7.5 | 7 | 7.5 | 80.0 | 47.0 | 47.0 | 7 | 14 | 65.0 | 7 | 14 | 46.0 | 7 | 7.5 | 6 | 6 | 70.9 | 203 | 215 | 7 | 6 | 61.0 | 5 | 12 | 6 | 6.5 | 0 |
| 30 FT | 24 | 28 | 19 | 13 | 7 | 7.5 | 7 | 7.5 | 77.8 | 48.0 | 48.0 | 7 | 14 | 64.5 | 7 | 14 | 46.0 | 7 | 7.5 | 6 | 6 | 68.5 | 204 | 216 | 7 | 6 | 61.0 | 5 | 12 | 6 | 6.5 | 0 |
| 32 FT | 25 | 29 | 19 | 13 | 7 | 7 | 7 | 7 | 77.8 | 49.0 | 49.0 | 7 | 14 | 63.5 | 7 | 14 | 45.5 | 7 | 7.5 | 6 | 6 | 68.6 | 205 | 217 | 8 | 7.5 | 67.0 | 5 | 12 | 6 | 6.5 | 0 |
| 34 FT | 26 | 30 | 20 | 13 | 7 | 7 | 7 | 7 | 78.3 | 50.0 | 50.0 | 7 | 13 | 63.0 | 7 | 13 | 44.5 | 7 | 6.5 | 6 | 6 | 68.9 | 206 | 218 | 8 | 7.5 | 67.0 | 5 | 12 | 6 | 6.5 | 0 |
| 36 FT | 27 | 32 | 21 | 13 | 7 | 6.5 | 7 | 7 | 78.9 | 51.0 | 51.0 | 7 | 13 | 62.0 | 7 | 13 | 43.5 | 7 | 7 | 6 | 6 | 69.4 | 208 | 220 | 8 | 7 | 67.0 | 5 | 12 | 6 | 6 | 0 |
| 38 FT | 28 | 33 | 22 | 13 | 7 | 6.5 | 7 | 7 | 79.4 | 52.0 | 58.0 | 7 | 12 | 61.0 | 7 | 12 | 43.0 | 7 | 7 | 7 | 7.5 | 72.6 | 209 | 221 | 8 | 6.5 | 67.0 | 5 | 12 | 6 | 6 | 0 |
| 40 FT | 29 | 34 | 22 | 13 | 7 | 6.5 | 7 | 6.5 | 79.5 | 59.0 | 59.0 | 7 | 12 | 60.0 | 7 | 12 | 42.0 | 7 | 7 | 7 | 7.5 | 72.9 | 210 | 222 | 8 | 6.5 | 67.0 | 5 | 12 | 6 | 6 | 0 |
| 42 FT | 30 | 35 | 23 | 13 | 7 | 6 | 7 | 6.5 | 80.1 | 60.0 | 60.0 | 7 | 12 | 60.0 | 7 | 12 | 41.0 | 7 | 7 | 7 | 7.5 | 73.1 | 211 | 223 | 8 | 6.5 | 67.0 | 5 | 12 | 7 | 7.5 | 0 |
| 44 FT | 31 | 36 | 24 | 13 | 7 | 6 | 7 | 6.5 | 80.8 | 55.0 | 61.0 | 8 | 15 | 67.5 | 8 | 15 | 48.5 | 7 | 6.5 | 7 | 7 | 73.5 | 212 | 224 | 8 | 6 | 67.0 | 5 | 12 | 7 | 7.5 | 0 |
| 46 FT | 32 | 37 | 24 | 13 | 7 | 6 | 7 | 6 | 80.8 | 56.0 | 62.0 | 8 | 15 | 67.0 | 8 | 15 | 48.0 | 7 | 6.5 | 7 | 7 | 73.6 | 213 | 225 | 8 | 6 | 67.0 | 5 | 12 | 7 | 7.5 | 0 |
| 48 FT | 32 | 38 | 26 | 13 | 8 | 7.5 | 7 | 6 | 81.9 | 56.0 | 62.0 | 8 | 14 | 67.0 | 8 | 14 | 48.0 | 7 | 6.5 | 7 | 7.5 | 74.1 | 214 | 226 | 8 | 6 | 67.0 | 5 | 12 | 7 | 7.5 | 0 |
| 50 FT | 33 | 39 | 27 | 13 | 8 | 7 | 7 | 6 | 82.6 | 57.0 | 63.0 | 8 | 15 | 66.0 | 8 | 15 | 47.5 | 7 | 6.5 | 7 | 7.5 | 74.5 | 215 | 227 | 8 | 6 | 67.0 | 5 | 12 | 7 | 8 | 0 |

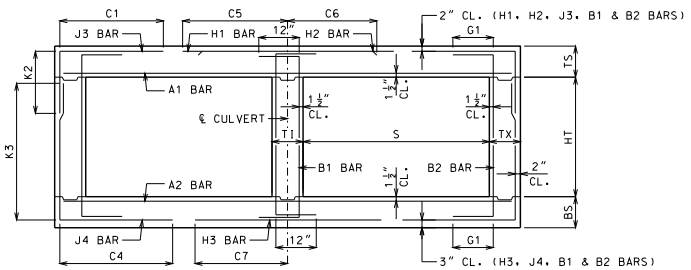


BAR DIMENSIONS DIAGRAM
SYMMETRICAL ABOUT ℄ CULVERT.

GENERAL NOTES:

IF DESIGN FILL IS BETWEEN TABULATED DESIGN FILLS, USE THE NEXT GREATER TABULATED DESIGN FILL, EXCEPT FOR DESIGN FILLS BETWEEN 2 FEET AND 4 FEET. FOR DESIGN FILLS BETWEEN 2 FEET AND 4 FEET USE THE GREATER MEMBER THICKNESS, AREA OF REINFORCEMENT AND BAR DIMENSIONS FROM THE 2 FEET AND 4 FEET TABULATED DESIGN FILLS. AREA OF REINFORCEMENT EQUALS BAR AREA PER FOOT SPACING.

SPECIAL DESIGNS ARE REQUIRED WHEN THE DESIGN FILL IS LESS THAN 1 FOOT OR GREATER THAN 50 FEET.

DIMENSIONS ARE IN INCHES UNLESS OTHERWISE SPECIFIED.

DESIGN FILLS ARE MEASURED FROM THE TOP OF TOP SLAB TO THE TOP OF EARTH FILL OR ROADWAY.

CULVERTS MEET STRENGTH AND SERVICEABILITY REQUIREMENTS FOR THE DESIGN VEHICULAR LIVE LOAD HL-93 MINUS THE LANE LOAD.


MISSOURI HIGHWAYS AND TRANSPORTATION COMMISSION
105 WEST CAPITOL
JEFFERSON CITY, MO 65102
1-888-ASK-MODOT (1-888-275-6636)


STATE OF MISSOURI
DENNIS W. HECKMANN
NUMBER PE-27141
PROFESSIONAL ENGINEER
THIS SHEET HAS BEEN SIGNED, SEALED AND DATED ELECTRONICALLY.

# CONCRETE DOUBLE BOX CULVERT

MEMBER THICKNESS
BAR SIZE, SPACING & DIMENSIONS

SPAN (S): 13 FEET
HEIGHT (HT): 13 THRU 16 FEET

DATE EFFECTIVE: 10/01/2011
DATE PREPARED: 9/8/2011

703.47

SHEET NO.
21 OF 27

IF A SEAL IS PRESENT ON THIS SHEET IT HAS BEEN ELECTRONICALLY SEALED AND DATED.

## SPAN (S) = 14 FT  HEIGHT (HT) = 7 FT OR 8 FT OR 9 FT

| DESIGN FILL | MEMBER THICKNESS | | | | TOP SLAB BARS | | | | | | | | | | | | BOTTOM SLAB BARS | | | | | | | | | | | | WALL BARS | | | | |
|---|---|---|---|---|---|---|---|---|---|---|---|---|---|---|---|---|---|---|---|---|---|---|---|---|---|---|---|---|---|---|---|---|---|
| | | | | | A1 BARS | | J3 BARS | | | K2 | | | H1 BARS | | | H2 BARS | | | A2 BARS | | J4 BARS | | | K3 | | | H3 BARS | | | B1 BARS | | B2 BARS | |
| | TS | BS | TX | TI | SIZE | SPA. | SIZE | SPA. | C1 | HT=7′ | HT=8′ | HT=9′ | SIZE | SPA. | C5 | SIZE | SPA. | C6 | SIZE | SPA. | SIZE | SPA. | C4 | HT=7′ | HT=8′ | HT=9′ | SIZE | SPA. | C7 | SIZE | SPA. | SIZE | SPA. | G1 |
| 1 FT | 15 | 11 | 8 | 8 | 6 | 8 | 5 | 8 | 69.3 | 31.0 | 35.0 | 35.0 | 6 | 16 | 137.5 | 6 | 16 | 46.5 | 5 | 6.5 | 5 | 6 | 57.8 | 91 | 103 | 115 | 6 | 6 | 63.0 | 5 | 12 | 5 | 12 | 12 |
| 2 FT | 15 | 12 | 8 | 8 | 6 | 8 | 5 | 8 | 69.3 | 35.0 | 35.0 | 35.0 | 6 | 16 | 137.5 | 6 | 16 | 48.0 | 5 | 6 | 5 | 6.5 | 52.5 | 92 | 104 | 116 | 6 | 6 | 62.5 | 5 | 12 | 5 | 12 | 12 |
| 4 FT | 12 | 11 | 8 | 8 | 6 | 7.5 | 5 | 6 | 48.0 | 32.0 | 32.0 | 32.0 | 6 | 12 | 86.0 | 6 | 12 | 39.5 | 5 | 6.5 | 6 | 7 | 49.3 | 91 | 103 | 115 | 7 | 6 | 64.5 | 5 | 12 | 5 | 12 | 12 |
| 6 FT | 12 | 13 | 8 | 8 | 6 | 8 | 6 | 7.5 | 47.6 | 32.0 | 32.0 | 32.0 | 7 | 15 | 74.0 | 7 | 15 | 41.0 | 5 | 6 | 5 | 7 | 41.9 | 93 | 105 | 117 | 7 | 6.5 | 64.5 | 5 | 12 | 5 | 12 | 12 |
| 8 FT | 13 | 14 | 8 | 8 | 5 | 6 | 5 | 6.5 | 41.1 | 33.0 | 33.0 | 33.0 | 7 | 15 | 68.5 | 7 | 15 | 40.0 | 6 | 8 | 5 | 7.5 | 39.1 | 94 | 106 | 118 | 7 | 6.5 | 64.0 | 5 | 12 | 5 | 12 | 0 |
| 10 FT | 14 | 15 | 8 | 8 | 6 | 8 | 5 | 6.5 | 38.6 | 34.0 | 34.0 | 34.0 | 7 | 14 | 66.5 | 7 | 14 | 39.5 | 6 | 7.5 | 5 | 7.5 | 37.4 | 95 | 107 | 119 | 7 | 6 | 63.5 | 5 | 12 | 5 | 12 | 0 |
| 12 FT | 16 | 17 | 8 | 8 | 6 | 8 | 5 | 6.5 | 41.5 | 36.0 | 36.0 | 36.0 | 7 | 14 | 73.0 | 7 | 14 | 47.5 | 6 | 7 | 5 | 7 | 36.1 | 97 | 109 | 121 | 7 | 6.5 | 63.5 | 5 | 12 | 5 | 11 | 0 |
| 14 FT | 17 | 18 | 8 | 8 | 6 | 7.5 | 5 | 6 | 40.3 | 37.0 | 37.0 | 37.0 | 7 | 14 | 72.5 | 7 | 14 | 47.0 | 6 | 6.5 | 5 | 6.5 | 35.1 | 98 | 110 | 122 | 7 | 6.5 | 63.0 | 5 | 12 | 5 | 10 | 0 |
| 16 FT | 18 | 20 | 8 | 8 | 6 | 7 | 6 | 8 | 43.4 | 38.0 | 38.0 | 38.0 | 7 | 13 | 71.5 | 7 | 13 | 47.0 | 6 | 6 | 5 | 6 | 34.4 | 100 | 112 | 124 | 7 | 6.5 | 63.0 | 5 | 12 | 5 | 9.5 | 0 |
| 18 FT | 20 | 21 | 8 | 8 | 6 | 6.5 | 6 | 7.5 | 42.4 | 44.0 | 44.0 | 44.0 | 7 | 13 | 71.0 | 7 | 13 | 46.5 | 6 | 6 | 6 | 7.5 | 37.0 | 101 | 113 | 125 | 7 | 6.5 | 63.0 | 5 | 12 | 5 | 9.5 | 0 |
| 20 FT | 21 | 22 | 8 | 8 | 6 | 6 | 6 | 7 | 41.8 | 45.0 | 45.0 | 45.0 | 7 | 13 | 70.5 | 7 | 13 | 46.5 | 7 | 7.5 | 6 | 7 | 36.5 | 102 | 114 | 126 | 7 | 6 | 63.0 | 5 | 12 | 5 | 9 | 0 |
| 22 FT | 23 | 24 | 8 | 8 | 7 | 7.5 | 6 | 6 | 41.3 | 47.0 | 47.0 | 47.0 | 7 | 13 | 69.5 | 7 | 13 | 46.5 | 7 | 7.5 | 6 | 6 | 36.4 | 104 | 116 | 128 | 7 | 6 | 63.0 | 5 | 12 | 5 | 8 | 0 |
| 24 FT | 24 | 26 | 9 | 8 | 7 | 7.5 | 6 | 7 | 42.1 | 48.0 | 48.0 | 48.0 | 7 | 13 | 69.0 | 7 | 13 | 46.0 | 7 | 7.5 | 6 | 6.5 | 36.8 | 106 | 118 | 130 | 7 | 6.5 | 63.0 | 5 | 12 | 5 | 8.5 | 0 |
| 26 FT | 25 | 27 | 9 | 8 | 7 | 7 | 6 | 6.5 | 41.9 | 49.0 | 49.0 | 49.0 | 7 | 12 | 68.5 | 7 | 12 | 46.0 | 7 | 7.5 | 6 | 6.5 | 36.6 | 107 | 119 | 131 | 7 | 6 | 63.0 | 5 | 12 | 5 | 8 | 0 |
| 28 FT | 26 | 28 | 9 | 8 | 7 | 7 | 6 | 6 | 41.8 | 50.0 | 50.0 | 50.0 | 7 | 12 | 68.0 | 7 | 12 | 46.0 | 7 | 7.5 | 6 | 6 | 36.6 | 108 | 120 | 132 | 7 | 6 | 63.0 | 5 | 12 | 5 | 7.5 | 0 |
| 30 FT | 27 | 29 | 9 | 8 | 7 | 6.5 | 6 | 6 | 41.1 | 51.0 | 51.0 | 51.0 | 7 | 12 | 67.0 | 7 | 12 | 45.5 | 7 | 7 | 6 | 6 | 35.4 | 109 | 121 | 133 | 8 | 7.5 | 68.5 | 5 | 12 | 5 | 7.5 | 0 |
| 32 FT | 28 | 31 | 10 | 8 | 7 | 6.5 | 6 | 6.5 | 41.8 | 52.0 | 52.0 | 52.0 | 7 | 12 | 66.0 | 7 | 12 | 45.0 | 7 | 7 | 6 | 6 | 35.9 | 111 | 123 | 135 | 8 | 7 | 68.5 | 5 | 12 | 5 | 8 | 0 |
| 34 FT | 29 | 32 | 10 | 8 | 7 | 6 | 6 | 6.5 | 41.8 | 53.0 | 53.0 | 53.0 | 7 | 12 | 65.5 | 7 | 12 | 44.5 | 7 | 7 | 6 | 6 | 36.0 | 112 | 124 | 136 | 8 | 7 | 68.5 | 5 | 12 | 5 | 7.5 | 0 |
| 36 FT | 31 | 33 | 10 | 8 | 7 | 6 | 6 | 6 | 41.8 | 55.0 | 55.0 | 55.0 | 8 | 15 | 71.5 | 8 | 15 | 50.5 | 7 | 7 | 7 | 6.5 | 39.4 | 113 | 125 | 137 | 8 | 6.5 | 68.5 | 5 | 12 | 5 | 6.5 | 0 |
| 38 FT | 31 | 34 | 11 | 8 | 8 | 7 | 6 | 6.5 | 42.3 | 55.0 | 55.0 | 55.0 | 8 | 14 | 71.5 | 8 | 14 | 51.0 | 7 | 6.5 | 6 | 6 | 36.8 | 114 | 126 | 138 | 8 | 6.5 | 68.5 | 5 | 12 | 5 | 7.5 | 0 |
| 40 FT | 33 | 35 | 11 | 8 | 8 | 7.5 | 6 | 6 | 42.3 | 57.0 | 57.0 | 57.0 | 8 | 14 | 69.5 | 8 | 14 | 49.0 | 7 | 6 | 6 | 6 | 37.0 | 115 | 127 | 139 | 8 | 6.5 | 68.5 | 5 | 12 | 5 | 7 | 0 |
| 42 FT | 33 | 37 | 11 | 8 | 8 | 7 | 6 | 6 | 42.3 | 57.0 | 57.0 | 57.0 | 8 | 14 | 69.5 | 8 | 14 | 49.5 | 7 | 6.5 | 7 | 6.5 | 40.1 | 117 | 129 | 141 | 8 | 6 | 68.5 | 5 | 12 | 5 | 6.5 | 0 |
| 44 FT | 34 | 38 | 12 | 8 | 8 | 7 | 6 | 6.5 | 43.3 | 58.0 | 58.0 | 58.0 | 8 | 14 | 69.0 | 8 | 14 | 48.5 | 7 | 6.5 | 6 | 6 | 37.6 | 118 | 130 | 142 | 8 | 6 | 68.5 | 5 | 12 | 5 | 7 | 0 |
| 46 FT | 35 | 39 | 12 | 8 | 8 | 6.5 | 6 | 6.5 | 43.1 | 59.0 | 59.0 | 59.0 | 8 | 13 | 68.5 | 8 | 13 | 47.5 | 7 | 6.5 | 6 | 6 | 37.9 | 119 | 131 | 143 | 8 | 6 | 68.5 | 5 | 12 | 5 | 6.5 | 0 |
| 48 FT | 36 | 40 | 12 | 8 | 8 | 6.5 | 6 | 6.5 | 43.1 | 60.0 | 60.0 | 60.0 | 8 | 13 | 67.5 | 8 | 13 | 46.5 | 7 | 6.5 | 6 | 6 | 38.1 | 120 | 132 | 144 | 9 | 7 | 74.5 | 5 | 11.5 | 5 | 6 | 0 |
| 50 FT | 37 | 41 | 12 | 8 | 8 | 6.5 | 6 | 6 | 43.3 | 61.0 | 61.0 | 61.0 | 8 | 13 | 67.0 | 8 | 13 | 46.5 | 7 | 6 | 7 | 6.5 | 41.3 | 121 | 133 | 145 | 9 | 7 | 74.5 | 5 | 8.5 | 6 | 8 | 0 |

## SPAN (S) = 14 FT  HEIGHT (HT) = 10 FT OR 11 FT OR 12 FT

| DESIGN FILL | MEMBER THICKNESS | | | | TOP SLAB BARS | | | | | | | | | | | | BOTTOM SLAB BARS | | | | | | | | | | | | WALL BARS | | | | |
|---|---|---|---|---|---|---|---|---|---|---|---|---|---|---|---|---|---|---|---|---|---|---|---|---|---|---|---|---|---|---|---|---|---|
| | | | | | A1 BARS | | J3 BARS | | | K2 | | | H1 BARS | | | H2 BARS | | | A2 BARS | | J4 BARS | | | K3 | | | H3 BARS | | | B1 BARS | | B2 BARS | |
| | TS | BS | TX | TI | SIZE | SPA. | SIZE | SPA. | C1 | HT=10′ | HT=11′ | HT=12′ | SIZE | SPA. | C5 | SIZE | SPA. | C6 | SIZE | SPA. | SIZE | SPA. | C4 | HT=10′ | HT=11′ | HT=12′ | SIZE | SPA. | C7 | SIZE | SPA. | SIZE | SPA. | G1 |
| 1 FT | 15 | 12 | 8 | 10 | 6 | 8 | 5 | 7 | 69.6 | 35.0 | 35.0 | 35.0 | 6 | 16 | 138.5 | 6 | 16 | 47.0 | 5 | 6.5 | 6 | 6 | 83.9 | 128 | 140 | 152 | 6 | 6.5 | 63.5 | 5 | 12 | 5 | 9.5 | 12 |
| 2 FT | 15 | 13 | 8 | 10 | 6 | 8 | 5 | 6.5 | 69.6 | 35.0 | 35.0 | 35.0 | 6 | 16 | 138.5 | 6 | 16 | 48.0 | 5 | 6 | 6 | 6 | 77.4 | 129 | 141 | 153 | 6 | 6.5 | 63.0 | 5 | 12 | 5 | 9.5 | 12 |
| 4 FT | 12 | 12 | 10 | 10 | 6 | 8 | 5 | 6 | 70.1 | 32.0 | 32.0 | 32.0 | 6 | 13 | 85.5 | 6 | 13 | 40.0 | 5 | 6 | 6 | 7 | 65.5 | 128 | 140 | 152 | 7 | 6.5 | 65.5 | 5 | 10 | 5 | 9.5 | 12 |
| 6 FT | 12 | 13 | 10 | 10 | 6 | 8.5 | 5 | 6 | 58.6 | 32.0 | 32.0 | 32.0 | 6 | 12 | 69.0 | 6 | 12 | 38.0 | 5 | 6 | 6 | 7 | 60.8 | 129 | 141 | 153 | 7 | 6.5 | 64.5 | 5 | 12 | 5 | 9.5 | 12 |
| 8 FT | 13 | 14 | 10 | 10 | 5 | 6 | 6 | 7 | 57.1 | 33.0 | 33.0 | 37.0 | 7 | 15 | 68.0 | 7 | 15 | 40.5 | 6 | 8 | 6 | 7 | 57.4 | 130 | 142 | 154 | 7 | 6.5 | 64.0 | 5 | 12 | 5 | 9 | 0 |
| 10 FT | 14 | 16 | 10 | 10 | 5 | 6 | 6 | 7 | 54.4 | 34.0 | 34.0 | 34.0 | 7 | 15 | 66.5 | 7 | 15 | 40.0 | 6 | 7 | 5 | 6 | 52.0 | 132 | 144 | 156 | 7 | 6.5 | 64.0 | 5 | 12 | 5 | 8 | 0 |
| 12 FT | 15 | 17 | 10 | 10 | 6 | 8 | 6 | 7 | 58.6 | 35.0 | 35.0 | 39.0 | 7 | 14 | 73.0 | 7 | 14 | 48.0 | 6 | 7 | 6 | 7.5 | 53.1 | 133 | 145 | 157 | 7 | 6.5 | 63.5 | 5 | 12 | 5 | 8 | 0 |
| 14 FT | 17 | 18 | 10 | 10 | 6 | 7.5 | 6 | 7 | 57.1 | 37.0 | 37.0 | 41.0 | 7 | 14 | 72.5 | 7 | 14 | 47.5 | 6 | 6.5 | 6 | 6.5 | 52.0 | 134 | 146 | 158 | 7 | 6.5 | 63.5 | 5 | 12 | 5 | 8 | 0 |
| 16 FT | 18 | 20 | 11 | 10 | 6 | 7 | 6 | 7 | 57.0 | 38.0 | 38.0 | 42.0 | 7 | 14 | 71.5 | 7 | 14 | 47.5 | 6 | 6 | 6 | 8 | 51.5 | 136 | 148 | 160 | 7 | 6.5 | 63.5 | 5 | 12 | 5 | 7.5 | 0 |
| 18 FT | 19 | 21 | 12 | 10 | 6 | 6.5 | 6 | 7 | 56.9 | 39.0 | 39.0 | 43.0 | 7 | 13 | 71.0 | 7 | 13 | 47.5 | 6 | 6 | 6 | 8.5 | 51.1 | 137 | 149 | 161 | 7 | 6.5 | 63.5 | 5 | 12 | 5 | 7 | 0 |
| 20 FT | 21 | 23 | 12 | 10 | 6 | 6 | 6 | 7 | 56.1 | 41.0 | 41.0 | 45.0 | 7 | 13 | 70.5 | 7 | 13 | 47.0 | 7 | 8 | 6 | 8 | 50.8 | 139 | 151 | 163 | 7 | 6.5 | 63.5 | 5 | 12 | 5 | 7 | 0 |
| 22 FT | 22 | 24 | 12 | 10 | 6 | 6 | 6 | 6.5 | 55.5 | 42.0 | 42.0 | 46.0 | 7 | 13 | 70.0 | 7 | 13 | 47.0 | 7 | 7.5 | 6 | 7.5 | 50.1 | 140 | 152 | 164 | 7 | 6.5 | 63.5 | 5 | 12 | 5 | 7 | 0 |
| 24 FT | 23 | 26 | 13 | 10 | 7 | 7 | 6 | 6.5 | 55.9 | 43.0 | 43.0 | 47.0 | 7 | 12 | 69.5 | 7 | 12 | 47.0 | 7 | 7.5 | 6 | 8.5 | 50.3 | 142 | 154 | 166 | 7 | 6.5 | 63.5 | 5 | 12 | 5 | 6.5 | 0 |
| 26 FT | 25 | 27 | 13 | 10 | 7 | 7 | 6 | 6.5 | 55.5 | 45.0 | 45.0 | 49.0 | 7 | 13 | 68.5 | 7 | 13 | 46.5 | 7 | 7.5 | 6 | 8 | 50.3 | 143 | 155 | 167 | 7 | 6 | 63.5 | 5 | 12 | 5 | 6.5 | 0 |
| 28 FT | 26 | 29 | 14 | 10 | 7 | 7 | 6 | 6.5 | 56.3 | 46.0 | 50.0 | 50.0 | 7 | 13 | 67.5 | 7 | 13 | 46.5 | 7 | 7.5 | 6 | 8.5 | 50.5 | 145 | 157 | 169 | 8 | 7.5 | 69.5 | 5 | 12 | 5 | 6 | 0 |
| 30 FT | 27 | 30 | 14 | 10 | 7 | 6.5 | 6 | 6.5 | 56.0 | 47.0 | 51.0 | 51.0 | 7 | 13 | 67.0 | 7 | 13 | 46.0 | 7 | 7 | 6 | 8 | 50.5 | 146 | 158 | 170 | 8 | 7.5 | 69.5 | 5 | 12 | 5 | 6 | 0 |
| 32 FT | 28 | 31 | 14 | 10 | 7 | 6.5 | 6 | 6.5 | 54.3 | 52.0 | 52.0 | 52.0 | 7 | 12 | 66.0 | 7 | 12 | 45.5 | 7 | 7 | 6 | 7.5 | 48.9 | 147 | 159 | 171 | 8 | 7 | 69.5 | 5 | 12 | 5 | 6 | 0 |
| 34 FT | 29 | 32 | 14 | 10 | 7 | 6 | 6 | 6 | 54.1 | 53.0 | 53.0 | 53.0 | 7 | 12 | 65.0 | 7 | 12 | 44.5 | 7 | 7 | 6 | 7.5 | 48.9 | 148 | 160 | 172 | 8 | 7 | 69.0 | 5 | 12 | 5 | 6 | 0 |
| 36 FT | 30 | 33 | 15 | 10 | 7 | 6 | 6 | 6.5 | 54.9 | 54.0 | 54.0 | 54.0 | 7 | 12 | 64.0 | 7 | 12 | 44.0 | 7 | 6 | 6 | 7 | 49.4 | 149 | 161 | 173 | 8 | 6.5 | 69.5 | 5 | 12 | 6 | 8 | 0 |
| 38 FT | 31 | 35 | 15 | 10 | 8 | 7.5 | 6 | 6 | 55.0 | 55.0 | 55.0 | 55.0 | 8 | 15 | 71.0 | 8 | 15 | 51.0 | 7 | 6.5 | 6 | 6.5 | 49.6 | 151 | 163 | 175 | 8 | 6.5 | 69.0 | 5 | 12 | 6 | 8 | 0 |
| 40 FT | 32 | 36 | 16 | 10 | 8 | 7.5 | 6 | 6 | 55.8 | 56.0 | 56.0 | 56.0 | 8 | 14 | 70.0 | 8 | 14 | 50.0 | 7 | 6.5 | 6 | 6.5 | 50.0 | 152 | 164 | 176 | 8 | 6 | 69.5 | 5 | 12 | 6 | 8 | 0 |
| 42 FT | 33 | 37 | 16 | 10 | 8 | 7 | 6 | 6 | 55.8 | 57.0 | 57.0 | 57.0 | 8 | 14 | 69.5 | 8 | 14 | 49.5 | 7 | 6.5 | 6 | 6.5 | 50.1 | 153 | 165 | 177 | 8 | 6 | 69.0 | 5 | 12 | 6 | 8 | 0 |
| 44 FT | 34 | 38 | 16 | 10 | 8 | 7 | 6 | 6 | 55.6 | 58.0 | 58.0 | 58.0 | 8 | 14 | 69.0 | 8 | 14 | 48.5 | 7 | 6.5 | 6 | 6 | 50.3 | 154 | 166 | 178 | 8 | 6 | 69.0 | 5 | 12 | 6 | 8 | 0 |
| 46 FT | 35 | 39 | 17 | 10 | 8 | 7 | 6 | 6 | 56.5 | 59.0 | 59.0 | 59.0 | 8 | 13 | 68.5 | 8 | 13 | 47.5 | 7 | 6 | 6 | 6 | 50.8 | 155 | 167 | 179 | 8 | 6 | 69.0 | 5 | 12 | 6 | 7.5 | 0 |
| 48 FT | 35 | 40 | 17 | 10 | 8 | 6 | 7 | 7.5 | 61.5 | 59.0 | 59.0 | 59.0 | 8 | 12 | 68.5 | 8 | 12 | 48.0 | 7 | 6 | 6 | 6 | 50.8 | 156 | 168 | 180 | 9 | 7 | 75.0 | 5 | 12 | 6 | 7.5 | 0 |
| 50 FT | 36 | 41 | 17 | 10 | 8 | 6.5 | 7 | 7 | 61.5 | 60.0 | 60.0 | 66.0 | 8 | 13 | 68.0 | 8 | 13 | 47.5 | 7 | 6 | 7 | 8 | 53.9 | 157 | 169 | 181 | 9 | 7 | 75.0 | 5 | 12 | 6 | 7.5 | 0 |

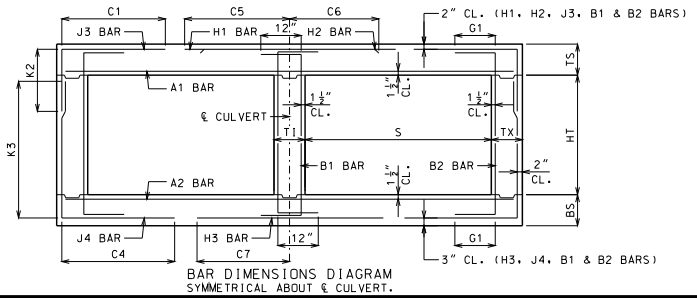


BAR DIMENSIONS DIAGRAM
SYMMETRICAL ABOUT ℄ CULVERT.

GENERAL NOTES:

IF DESIGN FILL IS BETWEEN TABULATED DESIGN FILLS, USE THE NEXT GREATER TABULATED DESIGN FILL, EXCEPT FOR DESIGN FILLS BETWEEN 2 FEET AND 4 FEET. FOR DESIGN FILLS BETWEEN 2 FEET AND 4 FEET USE THE GREATER MEMBER THICKNESS, AREA OF REINFORCEMENT AND BAR DIMENSIONS FROM THE 2 FEET AND 4 FEET TABULATED DESIGN FILLS. AREA OF REINFORCEMENT EQUALS BAR AREA PER FOOT SPACING.

SPECIAL DESIGNS ARE REQUIRED WHEN THE DESIGN FILL IS LESS THAN 1 FOOT OR GREATER THAN 50 FEET.

DIMENSIONS ARE IN INCHES UNLESS OTHERWISE SPECIFIED.

DESIGN FILLS ARE MEASURED FROM THE TOP OF TOP SLAB TO THE TOP OF EARTH FILL OR ROADWAY.

CULVERTS MEET STRENGTH AND SERVICEABILITY REQUIREMENTS FOR THE DESIGN VEHICULAR LIVE LOAD HL-93 MINUS THE LANE LOAD.


MISSOURI HIGHWAYS AND TRANSPORTATION COMMISSION
105 WEST CAPITOL
JEFFERSON CITY, MO 65102
1-888-ASK-MODOT (1-888-275-6636)


STATE OF MISSOURI
DENNIS W. HECKMANN
NUMBER PE-27141
PROFESSIONAL ENGINEER
THIS SHEET HAS BEEN SIGNED, SEALED AND DATED ELECTRONICALLY.

# CONCRETE DOUBLE BOX CULVERT

MEMBER THICKNESS
BAR SIZE, SPACING & DIMENSIONS

SPAN (S): 14 FEET
HEIGHT (HT): 7 THRU 12 FEET

DATE EFFECTIVE: 10/01/2011
DATE PREPARED: 9/8/2011

703.47

SHEET NO.
22 OF 27

IF A SEAL IS PRESENT ON THIS SHEET IT HAS BEEN ELECTRONICALLY SEALED AND DATED.

| SPAN (S) = 14 FT HEIGHT (HT) = 13 FT OR 14 FT | | | | | | | | | | | | | | | | | | | | | | | | | | | | | | | |
|---|---|---|---|---|---|---|---|---|---|---|---|---|---|---|---|---|---|---|---|---|---|---|---|---|---|---|---|---|---|---|---|
| DESIGN FILL | MEMBER THICKNESS | | | | TOP SLAB BARS | | | | | | | | | | | | | BOTTOM SLAB BARS | | | | | | | | | | | WALL BARS | | | | |
| | | | | | A1 BARS | | J3 BARS | | | | | H1 BARS | | | H2 BARS | | | A2 BARS | | J4 BARS | | | | | H3 BARS | | | B1 BARS | | B2 BARS | | |
| | TS | BS | TX | TI | SIZE | SPA. | SIZE | SPA. | C1 | K2 HT=13' | K2 HT=14' | SIZE | SPA. | C5 | SIZE | SPA. | C6 | SIZE | SPA. | SIZE | SPA. | C4 | K3 HT=13' | K3 HT=14' | SIZE | SPA. | C7 | SIZE | SPA. | SIZE | SPA. | G1 |
| 1 FT | 15 | 12 | 9 | 11 | 6 | 8 | 5 | 6 | 70.4 | 35.0 | 35.0 | 6 | 16 | 139.0 | 6 | 16 | 47.0 | 5 | 6 | 6 | 6 | 96.1 | 164 | 176 | 6 | 6 | 64.0 | 5 | 12 | 5 | 8.5 | 12 |
| 2 FT | 15 | 13 | 10 | 11 | 6 | 8 | 5 | 6 | 71.0 | 35.0 | 35.0 | 6 | 16 | 139.5 | 6 | 16 | 47.5 | 5 | 6 | 6 | 6.5 | 87.6 | 165 | 177 | 6 | 6.5 | 63.5 | 5 | 12 | 5 | 8 | 12 |
| 4 FT | 12 | 12 | 10 | 11 | 6 | 7.5 | 6 | 7.5 | 100.0 | 36.0 | 36.0 | 6 | 13 | 94.5 | 6 | 13 | 40.0 | 5 | 6 | 6 | 6 | 77.9 | 164 | 176 | 7 | 6.5 | 65.5 | 5 | 12 | 5 | 8 | 12 |
| 6 FT | 12 | 13 | 10 | 11 | 6 | 8 | 6 | 7 | 74.8 | 36.0 | 36.0 | 6 | 12 | 69.0 | 6 | 12 | 38.5 | 5 | 6 | 6 | 6 | 72.4 | 165 | 177 | 7 | 6.5 | 65.0 | 5 | 12 | 5 | 8 | 12 |
| 8 FT | 13 | 14 | 11 | 11 | 5 | 6 | 6 | 7 | 68.4 | 37.0 | 37.0 | 7 | 16 | 68.0 | 7 | 16 | 41.0 | 6 | 8 | 6 | 7 | 68.4 | 166 | 178 | 7 | 6 | 64.0 | 5 | 12 | 5 | 7.5 | 0 |
| 10 FT | 14 | 16 | 11 | 11 | 5 | 6 | 6 | 6.5 | 65.4 | 38.0 | 38.0 | 7 | 15 | 66.5 | 7 | 15 | 40.5 | 6 | 7 | 6 | 6.5 | 66.8 | 168 | 180 | 7 | 6.5 | 64.0 | 5 | 12 | 5 | 7.5 | 0 |
| 12 FT | 15 | 17 | 12 | 11 | 6 | 8 | 6 | 6.5 | 69.4 | 39.0 | 39.0 | 7 | 14 | 73.0 | 7 | 14 | 48.0 | 6 | 7 | 6 | 7 | 64.6 | 169 | 181 | 7 | 6.5 | 64.0 | 5 | 12 | 5 | 7 | 0 |
| 14 FT | 17 | 18 | 12 | 11 | 6 | 7.5 | 6 | 6.5 | 67.9 | 41.0 | 41.0 | 7 | 15 | 72.0 | 7 | 15 | 48.0 | 6 | 6 | 6 | 6 | 63.0 | 170 | 182 | 7 | 6 | 63.5 | 5 | 12 | 5 | 7 | 0 |
| 16 FT | 18 | 20 | 13 | 11 | 6 | 7 | 6 | 6.5 | 66.9 | 42.0 | 42.0 | 7 | 14 | 71.5 | 7 | 14 | 47.5 | 6 | 6 | 6 | 7 | 62.1 | 172 | 184 | 7 | 6.5 | 63.5 | 5 | 12 | 5 | 6.5 | 0 |
| 18 FT | 19 | 21 | 13 | 11 | 6 | 6.5 | 6 | 6 | 65.6 | 43.0 | 43.0 | 7 | 13 | 71.0 | 7 | 13 | 47.5 | 7 | 8 | 6 | 6 | 61.0 | 173 | 185 | 7 | 6.5 | 63.5 | 5 | 12 | 5 | 6.5 | 0 |
| 20 FT | 21 | 23 | 14 | 11 | 6 | 6 | 6 | 6 | 65.4 | 45.0 | 45.0 | 7 | 14 | 70.0 | 7 | 14 | 47.5 | 7 | 8 | 6 | 7 | 60.6 | 175 | 187 | 7 | 6.5 | 63.5 | 5 | 12 | 5 | 6 | 0 |
| 22 FT | 22 | 24 | 14 | 11 | 6 | 6 | 7 | 8 | 69.4 | 46.0 | 46.0 | 7 | 13 | 69.5 | 7 | 13 | 47.0 | 7 | 7 | 6 | 6 | 59.8 | 176 | 188 | 7 | 6.5 | 63.5 | 5 | 12 | 5 | 6 | 0 |
| 24 FT | 23 | 26 | 15 | 11 | 7 | 7.5 | 7 | 8 | 69.5 | 47.0 | 47.0 | 7 | 13 | 69.0 | 7 | 13 | 47.0 | 7 | 7.5 | 6 | 7 | 59.5 | 178 | 190 | 7 | 6.5 | 63.5 | 5 | 12 | 6 | 8 | 0 |
| 26 FT | 24 | 27 | 15 | 11 | 7 | 7 | 7 | 7.5 | 69.0 | 48.0 | 48.0 | 7 | 13 | 68.5 | 7 | 13 | 47.0 | 7 | 7 | 6 | 6.5 | 59.3 | 179 | 191 | 7 | 6 | 63.5 | 5 | 12 | 6 | 8 | 0 |
| 28 FT | 25 | 29 | 16 | 11 | 7 | 6.5 | 7 | 7.5 | 69.5 | 49.0 | 49.0 | 7 | 13 | 67.5 | 7 | 13 | 46.5 | 7 | 7 | 6 | 7 | 59.5 | 181 | 193 | 8 | 7.5 | 69.5 | 5 | 12 | 6 | 8 | 0 |
| 30 FT | 27 | 30 | 16 | 11 | 7 | 6.5 | 7 | 7 | 69.3 | 51.0 | 51.0 | 7 | 13 | 66.0 | 7 | 13 | 45.5 | 7 | 7 | 6 | 6.5 | 59.5 | 182 | 194 | 8 | 7.5 | 69.5 | 5 | 12 | 6 | 8 | 0 |
| 32 FT | 28 | 31 | 16 | 11 | 7 | 6.5 | 7 | 7.5 | 67.1 | 52.0 | 52.0 | 7 | 12 | 65.0 | 7 | 12 | 44.5 | 7 | 7 | 6 | 7 | 57.1 | 183 | 195 | 8 | 7 | 69.5 | 5 | 12 | 6 | 8 | 0 |
| 34 FT | 29 | 32 | 17 | 11 | 7 | 6 | 7 | 7.5 | 67.8 | 53.0 | 53.0 | 7 | 12 | 64.0 | 7 | 12 | 44.0 | 7 | 6.5 | 6 | 7 | 57.5 | 184 | 196 | 8 | 7 | 69.5 | 5 | 12 | 6 | 7.5 | 0 |
| 36 FT | 30 | 34 | 17 | 11 | 7 | 6 | 7 | 6.5 | 67.8 | 54.0 | 54.0 | 7 | 12 | 63.0 | 7 | 12 | 43.0 | 7 | 7 | 6 | 7 | 57.6 | 186 | 198 | 8 | 6.5 | 69.5 | 5 | 12 | 6 | 7.5 | 0 |
| 38 FT | 31 | 35 | 18 | 11 | 7 | 6 | 7 | 7 | 68.5 | 55.0 | 55.0 | 8 | 15 | 70.0 | 8 | 15 | 50.5 | 7 | 6.5 | 6 | 6.5 | 58.0 | 187 | 199 | 8 | 6.5 | 69.5 | 5 | 12 | 6 | 7 | 0 |
| 40 FT | 32 | 36 | 18 | 11 | 8 | 7.5 | 7 | 6.5 | 68.4 | 56.0 | 56.0 | 8 | 14 | 69.5 | 8 | 14 | 49.5 | 7 | 6.5 | 6 | 6.5 | 58.1 | 188 | 200 | 8 | 6 | 69.5 | 5 | 12 | 6 | 7 | 0 |
| 42 FT | 33 | 37 | 19 | 11 | 8 | 7 | 7 | 7 | 69.1 | 57.0 | 57.0 | 8 | 14 | 69.0 | 8 | 14 | 48.5 | 7 | 6.5 | 6 | 6.5 | 58.5 | 189 | 201 | 8 | 6 | 69.5 | 5 | 12 | 6 | 6.5 | 0 |
| 44 FT | 33 | 38 | 20 | 11 | 8 | 7 | 7 | 7 | 69.9 | 57.0 | 57.0 | 8 | 14 | 69.0 | 8 | 14 | 49.0 | 7 | 6 | 6 | 6 | 58.9 | 190 | 202 | 8 | 6 | 69.5 | 5 | 12 | 6 | 6.5 | 0 |
| 46 FT | 34 | 39 | 20 | 11 | 8 | 7 | 7 | 6 | 69.8 | 58.0 | 58.0 | 8 | 14 | 68.5 | 8 | 14 | 48.5 | 7 | 6 | 6 | 6 | 59.0 | 191 | 203 | 8 | 6 | 69.5 | 5 | 12 | 6 | 6.5 | 0 |
| 48 FT | 35 | 41 | 21 | 11 | 8 | 6.5 | 7 | 6.5 | 70.6 | 65.0 | 65.0 | 8 | 13 | 68.0 | 8 | 13 | 47.5 | 7 | 6 | 7 | 8 | 62.5 | 193 | 205 | 9 | 7 | 75.5 | 5 | 12 | 6 | 6 | 0 |
| 50 FT | 36 | 42 | 22 | 11 | 8 | 6.5 | 7 | 6.5 | 71.4 | 66.0 | 66.0 | 8 | 14 | 67.0 | 8 | 14 | 47.5 | 7 | 6 | 7 | 7.5 | 63.0 | 194 | 206 | 9 | 7 | 75.5 | 5 | 12 | 6 | 6 | 0 |

| SPAN (S) = 14 FT HEIGHT (HT) = 15 FT OR 16 FT | | | | | | | | | | | | | | | | | | | | | | | | | | | | | | | |
|---|---|---|---|---|---|---|---|---|---|---|---|---|---|---|---|---|---|---|---|---|---|---|---|---|---|---|---|---|---|---|---|
| DESIGN FILL | MEMBER THICKNESS | | | | TOP SLAB BARS | | | | | | | | | | | | | BOTTOM SLAB BARS | | | | | | | | | | | WALL BARS | | | | |
| | | | | | A1 BARS | | J3 BARS | | | | | H1 BARS | | | H2 BARS | | | A2 BARS | | J4 BARS | | | | | H3 BARS | | | B1 BARS | | B2 BARS | | |
| | TS | BS | TX | TI | SIZE | SPA. | SIZE | SPA. | C1 | K2 HT=15' | K2 HT=16' | SIZE | SPA. | C5 | SIZE | SPA. | C6 | SIZE | SPA. | SIZE | SPA. | C4 | K3 HT=15' | K3 HT=16' | SIZE | SPA. | C7 | SIZE | SPA. | SIZE | SPA. | G1 |
| 1 FT | 15 | 13 | 12 | 13 | 6 | 8 | 5 | 6 | 72.6 | 35.0 | 35.0 | 6 | 16 | 141.0 | 6 | 16 | 46.0 | 5 | 6.5 | 6 | 7.5 | 102.5 | 189 | 201 | 6 | 6.5 | 64.5 | 5 | 12 | 5 | 7 | 12 |
| 2 FT | 15 | 13 | 12 | 13 | 6 | 8 | 6 | 8 | 75.6 | 35.0 | 39.0 | 6 | 16 | 144.0 | 6 | 16 | 47.5 | 5 | 6 | 6 | 7 | 95.8 | 189 | 201 | 6 | 6 | 63.5 | 5 | 12 | 5 | 7 | 12 |
| 4 FT | 12 | 12 | 12 | 13 | 6 | 8 | 6 | 7.5 | 118.3 | 36.0 | 36.0 | 6 | 13 | 86.5 | 6 | 13 | 40.0 | 5 | 6 | 6 | 6 | 86.6 | 188 | 200 | 7 | 6.5 | 65.5 | 5 | 12 | 5 | 7 | 12 |
| 6 FT | 12 | 13 | 12 | 13 | 5 | 6 | 6 | 7 | 86.4 | 36.0 | 36.0 | 6 | 12 | 68.0 | 6 | 12 | 39.0 | 5 | 6 | 6 | 6 | 83.0 | 189 | 201 | 7 | 6 | 65.0 | 5 | 12 | 5 | 7 | 12 |
| 8 FT | 13 | 15 | 13 | 13 | 5 | 6 | 6 | 7 | 78.9 | 37.0 | 37.0 | 6 | 12 | 64.5 | 6 | 12 | 38.0 | 6 | 7.5 | 6 | 6.5 | 80.3 | 191 | 203 | 7 | 6.5 | 64.5 | 5 | 12 | 5 | 6.5 | 0 |
| 10 FT | 14 | 16 | 13 | 13 | 5 | 6 | 6 | 6.5 | 75.0 | 38.0 | 38.0 | 7 | 15 | 66.0 | 7 | 15 | 41.0 | 6 | 7 | 6 | 6.5 | 77.3 | 192 | 204 | 7 | 6.5 | 64.5 | 5 | 12 | 5 | 6.5 | 0 |
| 12 FT | 15 | 17 | 14 | 13 | 6 | 8 | 6 | 6.5 | 78.5 | 39.0 | 39.0 | 7 | 15 | 73.0 | 7 | 15 | 48.5 | 6 | 6.5 | 6 | 6.5 | 74.1 | 193 | 205 | 7 | 6.5 | 64.0 | 5 | 12 | 5 | 6 | 0 |
| 14 FT | 16 | 19 | 14 | 13 | 6 | 8 | 6 | 6 | 77.0 | 40.0 | 40.0 | 7 | 14 | 72.0 | 7 | 14 | 48.5 | 6 | 6 | 6 | 6 | 73.6 | 195 | 207 | 7 | 6.5 | 64.0 | 5 | 12 | 5 | 6 | 0 |
| 16 FT | 18 | 20 | 15 | 13 | 6 | 7 | 6 | 6 | 76.5 | 42.0 | 42.0 | 7 | 14 | 71.5 | 7 | 14 | 48.5 | 6 | 6 | 6 | 6 | 72.1 | 196 | 208 | 7 | 6.5 | 64.0 | 5 | 12 | 6 | 8 | 0 |
| 18 FT | 19 | 21 | 15 | 13 | 6 | 6.5 | 7 | 7.5 | 80.5 | 43.0 | 49.0 | 7 | 14 | 71.0 | 7 | 14 | 48.5 | 7 | 8 | 7 | 7 | 74.1 | 197 | 209 | 7 | 6.5 | 64.0 | 5 | 12 | 6 | 8 | 0 |
| 20 FT | 20 | 23 | 16 | 13 | 6 | 6.5 | 7 | 7.5 | 79.9 | 44.0 | 50.0 | 7 | 13 | 70.5 | 7 | 13 | 48.0 | 7 | 7.5 | 7 | 8 | 73.8 | 199 | 211 | 7 | 6.5 | 64.0 | 5 | 12 | 6 | 8 | 0 |
| 22 FT | 22 | 25 | 17 | 13 | 6 | 6 | 7 | 7.5 | 79.8 | 46.0 | 46.0 | 7 | 14 | 69.5 | 7 | 14 | 48.0 | 7 | 7.5 | 6 | 6 | 70.5 | 201 | 213 | 7 | 6.5 | 64.0 | 5 | 12 | 6 | 7.5 | 0 |
| 24 FT | 23 | 26 | 18 | 13 | 7 | 7.5 | 7 | 7.5 | 79.5 | 47.0 | 47.0 | 7 | 13 | 69.0 | 7 | 13 | 47.5 | 7 | 7.5 | 6 | 6 | 69.9 | 202 | 214 | 7 | 6.5 | 64.0 | 5 | 12 | 6 | 7 | 0 |
| 26 FT | 24 | 27 | 18 | 13 | 7 | 7.5 | 7 | 7 | 79.1 | 48.0 | 48.0 | 7 | 13 | 68.5 | 7 | 13 | 47.5 | 7 | 6.5 | 6 | 6 | 69.6 | 203 | 215 | 7 | 6 | 64.0 | 5 | 12 | 6 | 7 | 0 |
| 28 FT | 25 | 29 | 19 | 13 | 7 | 7 | 7 | 7 | 79.5 | 49.0 | 49.0 | 7 | 13 | 68.0 | 7 | 13 | 47.5 | 7 | 7 | 6 | 6 | 70.0 | 205 | 217 | 8 | 7.5 | 70.0 | 5 | 12 | 6 | 6.5 | 0 |
| 30 FT | 26 | 30 | 20 | 13 | 7 | 6.5 | 7 | 7 | 79.8 | 50.0 | 50.0 | 7 | 13 | 67.0 | 7 | 13 | 47.0 | 7 | 6.5 | 6 | 6 | 69.9 | 206 | 218 | 8 | 7.5 | 70.0 | 5 | 12 | 6 | 6.5 | 0 |
| 32 FT | 27 | 31 | 20 | 13 | 7 | 6.5 | 7 | 7 | 77.4 | 51.0 | 51.0 | 7 | 13 | 66.5 | 7 | 13 | 47.0 | 7 | 6.5 | 6 | 6 | 67.5 | 207 | 219 | 8 | 7 | 70.0 | 5 | 12 | 6 | 6.5 | 0 |
| 34 FT | 28 | 32 | 20 | 13 | 7 | 6 | 7 | 7 | 77.4 | 52.0 | 52.0 | 7 | 12 | 65.5 | 7 | 12 | 46.0 | 7 | 6 | 6 | 6 | 67.6 | 208 | 220 | 8 | 7 | 70.0 | 5 | 12 | 6 | 6.5 | 0 |
| 36 FT | 29 | 34 | 21 | 13 | 7 | 6 | 7 | 7 | 78.0 | 53.0 | 53.0 | 7 | 12 | 64.5 | 7 | 12 | 45.0 | 7 | 6.5 | 6 | 6 | 68.1 | 210 | 222 | 8 | 6.5 | 70.0 | 5 | 12 | 6 | 6 | 0 |
| 38 FT | 30 | 35 | 22 | 13 | 7 | 6 | 7 | 6.5 | 78.6 | 54.0 | 60.0 | 7 | 12 | 63.5 | 7 | 12 | 44.5 | 7 | 6.5 | 7 | 7.5 | 71.4 | 211 | 223 | 8 | 6.5 | 70.0 | 5 | 12 | 6 | 6 | 0 |
| 40 FT | 31 | 36 | 22 | 13 | 8 | 7.5 | 7 | 6 | 78.6 | 61.0 | 61.0 | 8 | 15 | 71.0 | 8 | 15 | 51.5 | 7 | 6.5 | 7 | 7.5 | 71.5 | 212 | 224 | 8 | 6 | 70.0 | 5 | 12 | 6 | 6 | 0 |
| 42 FT | 32 | 37 | 23 | 13 | 8 | 7.5 | 7 | 6.5 | 79.3 | 56.0 | 62.0 | 8 | 14 | 70.0 | 8 | 14 | 51.0 | 7 | 6 | 7 | 7.5 | 71.8 | 213 | 225 | 8 | 6 | 70.0 | 5 | 12 | 7 | 7.5 | 0 |
| 44 FT | 33 | 39 | 24 | 13 | 8 | 7 | 7 | 6.5 | 80.0 | 57.0 | 63.0 | 8 | 14 | 70.0 | 8 | 14 | 50.0 | 7 | 6 | 7 | 7 | 72.4 | 215 | 227 | 8 | 6 | 70.0 | 5 | 12 | 7 | 7.5 | 0 |
| 46 FT | 34 | 40 | 25 | 13 | 8 | 7 | 7 | 6.5 | 80.6 | 58.0 | 64.0 | 8 | 14 | 69.5 | 8 | 14 | 49.0 | 7 | 6 | 7 | 7.5 | 72.6 | 216 | 228 | 9 | 7 | 76.0 | 5 | 12 | 7 | 7.5 | 0 |
| 48 FT | 35 | 41 | 26 | 13 | 8 | 7 | 7 | 6 | 81.4 | 65.0 | 65.0 | 8 | 14 | 68.5 | 8 | 14 | 48.5 | 7 | 6 | 7 | 7.5 | 73.0 | 217 | 229 | 9 | 7 | 76.5 | 5 | 12 | 7 | 8 | 0 |
| 50 FT | 35 | 42 | 27 | 13 | 8 | 6.5 | 7 | 6 | 82.0 | 65.0 | 65.0 | 8 | 13 | 68.5 | 8 | 13 | 48.5 | 7 | 6 | 7 | 7.5 | 73.3 | 218 | 230 | 9 | 7 | 76.5 | 5 | 12 | 7 | 8 | 0 |

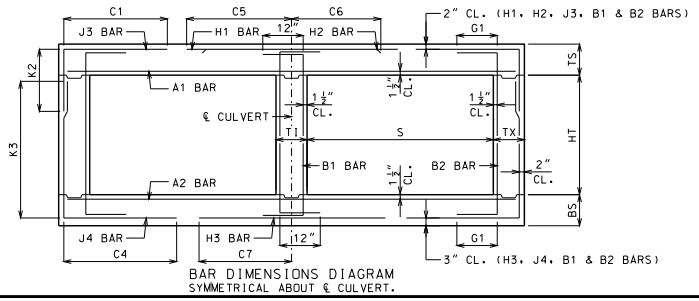


BAR DIMENSIONS DIAGRAM
SYMMETRICAL ABOUT ℄ CULVERT.

GENERAL NOTES:

IF DESIGN FILL IS BETWEEN TABULATED DESIGN FILLS, USE THE NEXT GREATER TABULATED DESIGN FILL, EXCEPT FOR DESIGN FILLS BETWEEN 2 FEET AND 4 FEET. FOR DESIGN FILLS BETWEEN 2 FEET AND 4 FEET USE THE GREATER MEMBER THICKNESS, AREA OF REINFORCEMENT AND BAR DIMENSIONS FROM THE 2 FEET AND 4 FEET TABULATED DESIGN FILLS. AREA OF REINFORCEMENT EQUALS BAR AREA PER FOOT SPACING.

SPECIAL DESIGNS ARE REQUIRED WHEN THE DESIGN FILL IS LESS THAN 1 FOOT OR GREATER THAN 50 FEET.

DIMENSIONS ARE IN INCHES UNLESS OTHERWISE SPECIFIED.

DESIGN FILLS ARE MEASURED FROM THE TOP OF TOP SLAB TO THE TOP OF EARTH FILL OR ROADWAY.

CULVERTS MEET STRENGTH AND SERVICEABILITY REQUIREMENTS FOR THE DESIGN VEHICULAR LIVE LOAD HL-93 MINUS THE LANE LOAD.


MISSOURI HIGHWAYS AND TRANSPORTATION COMMISSION
105 WEST CAPITOL
JEFFERSON CITY, MO 65102
1-888-ASK-MODOT (1-888-275-6636)


STATE OF MISSOURI
DENNIS W. HECKMAN
NUMBER PE-27141
PROFESSIONAL ENGINEER
THIS SHEET HAS BEEN SIGNED, SEALED AND DATED ELECTRONICALLY.

# CONCRETE DOUBLE BOX CULVERT

MEMBER THICKNESS
BAR SIZE, SPACING & DIMENSIONS

SPAN (S): 14 FEET
HEIGHT (HT): 13 THRU 16 FEET

DATE EFFECTIVE: 10/01/2011
DATE PREPARED: 9/8/2011

703.47

SHEET NO.
23 OF 27

IF A SEAL IS PRESENT ON THIS SHEET IT HAS BEEN ELECTRONICALLY SEALED AND DATED.

## SPAN (S) = 15 FT  HEIGHT (HT) = 8 FT OR 9 FT OR 10 FT

| DESIGN FILL | MEMBER THICKNESS | | | | TOP SLAB BARS | | | | | | | | | | | | BOTTOM SLAB BARS | | | | | | | | | | | | WALL BARS | | | | |
|---|---|---|---|---|---|---|---|---|---|---|---|---|---|---|---|---|---|---|---|---|---|---|---|---|---|---|---|---|---|---|---|---|---|
| | | | | | A1 BARS | | J3 BARS | | | K2 | | | H1 BARS | | | H2 BARS | | | A2 BARS | | J4 BARS | | | K3 | | | H3 BARS | | | B1 BARS | | B2 BARS | | |
| | TS | BS | TX | TI | SIZE | SPA. | SIZE | SPA. | C1 | HT=8′ | HT=9′ | HT=10′ | SIZE | SPA. | C5 | SIZE | SPA. | C6 | SIZE | SPA. | SIZE | SPA. | C4 | HT=8′ | HT=9′ | HT=10′ | SIZE | SPA. | C7 | SIZE | SPA. | SIZE | SPA. | G1 |
| 1 FT | 15 | 12 | 8 | 8 | 6 | 8 | 5 | 8 | 72.9 | 35.0 | 35.0 | 35.0 | 6 | 16 | 146.0 | 6 | 16 | 51.0 | 5 | 6 | 5 | 6 | 64.9 | 104 | 116 | 128 | 6 | 6 | 66.5 | 5 | 12 | 5 | 12 | 12 |
| 2 FT | 17 | 13 | 8 | 8 | 6 | 7.5 | 5 | 6.5 | 72.9 | 37.0 | 37.0 | 37.0 | 6 | 14 | 146.0 | 6 | 14 | 45.5 | 5 | 6 | 5 | 6 | 57.8 | 105 | 117 | 129 | 6 | 6 | 65.5 | 5 | 12 | 5 | 12 | 12 |
| 4 FT | 13 | 12 | 8 | 8 | 6 | 7 | 5 | 6 | 53.1 | 33.0 | 33.0 | 33.0 | 6 | 12 | 92.5 | 6 | 12 | 41.5 | 5 | 6 | 6 | 6.5 | 53.3 | 104 | 116 | 128 | 7 | 6 | 68.0 | 5 | 12 | 5 | 12 | 12 |
| 6 FT | 13 | 13 | 8 | 8 | 6 | 7.5 | 6 | 7.5 | 50.4 | 33.0 | 33.0 | 37.0 | 7 | 15 | 78.5 | 7 | 15 | 42.5 | 5 | 6 | 6 | 7 | 48.9 | 105 | 117 | 129 | 7 | 6 | 67.0 | 5 | 12 | 5 | 12 | 12 |
| 8 FT | 14 | 15 | 8 | 8 | 6 | 8 | 5 | 6 | 44.0 | 34.0 | 34.0 | 34.0 | 7 | 14 | 72.5 | 7 | 14 | 41.5 | 6 | 7.5 | 5 | 6.5 | 42.8 | 107 | 119 | 131 | 7 | 6 | 67.0 | 5 | 12 | 5 | 11 | 0 |
| 10 FT | 15 | 16 | 8 | 8 | 6 | 7.5 | 6 | 8 | 50.5 | 35.0 | 35.0 | 35.0 | 7 | 13 | 78.0 | 7 | 13 | 49.0 | 6 | 7 | 5 | 6.5 | 40.9 | 108 | 120 | 132 | 7 | 6 | 66.5 | 5 | 12 | 5 | 10 | 0 |
| 12 FT | 17 | 18 | 8 | 8 | 6 | 7.5 | 6 | 8 | 48.4 | 37.0 | 37.0 | 37.0 | 7 | 13 | 76.5 | 7 | 13 | 48.5 | 6 | 6.5 | 5 | 6 | 39.6 | 110 | 122 | 134 | 7 | 6 | 66.5 | 5 | 12 | 5 | 9.5 | 0 |
| 14 FT | 18 | 19 | 8 | 8 | 6 | 7 | 6 | 7.5 | 47.0 | 38.0 | 38.0 | 42.0 | 7 | 13 | 75.5 | 7 | 13 | 48.5 | 6 | 6 | 6 | 8 | 41.5 | 111 | 123 | 135 | 7 | 6 | 66.5 | 5 | 12 | 5 | 9.5 | 0 |
| 16 FT | 19 | 21 | 8 | 8 | 6 | 6 | 6 | 6.5 | 46.1 | 39.0 | 43.0 | 43.0 | 7 | 12 | 75.0 | 7 | 12 | 48.0 | 6 | 6 | 6 | 7 | 40.8 | 113 | 125 | 137 | 7 | 6 | 66.5 | 5 | 12 | 5 | 9 | 0 |
| 18 FT | 21 | 22 | 9 | 8 | 6 | 6 | 6 | 7.5 | 46.0 | 41.0 | 41.0 | 41.0 | 7 | 12 | 74.0 | 7 | 12 | 48.0 | 7 | 7.5 | 5 | 6 | 37.8 | 114 | 126 | 138 | 7 | 6 | 66.0 | 5 | 12 | 5 | 8.5 | 0 |
| 20 FT | 22 | 24 | 9 | 8 | 6 | 6 | 6 | 6.5 | 45.5 | 42.0 | 42.0 | 46.0 | 7 | 12 | 73.5 | 7 | 12 | 47.5 | 7 | 7.5 | 6 | 7 | 40.3 | 116 | 128 | 140 | 7 | 6 | 66.0 | 5 | 12 | 5 | 8.5 | 0 |
| 22 FT | 24 | 26 | 10 | 8 | 7 | 7.5 | 6 | 7.5 | 46.0 | 44.0 | 44.0 | 44.0 | 7 | 12 | 72.5 | 7 | 12 | 47.5 | 7 | 7.5 | 5 | 6 | 37.5 | 118 | 130 | 142 | 7 | 6 | 66.0 | 5 | 12 | 5 | 8 | 0 |
| 24 FT | 25 | 27 | 11 | 8 | 7 | 7 | 6 | 8 | 46.5 | 45.0 | 45.0 | 45.0 | 7 | 12 | 71.5 | 7 | 12 | 47.0 | 7 | 6.5 | 5 | 6 | 37.5 | 119 | 131 | 143 | 8 | 7 | 72.0 | 5 | 12 | 5 | 7.5 | 0 |
| 26 FT | 27 | 29 | 11 | 8 | 7 | 6.5 | 6 | 8 | 46.1 | 47.0 | 47.0 | 51.0 | 7 | 12 | 70.5 | 7 | 12 | 47.0 | 7 | 7 | 6 | 7.5 | 40.6 | 121 | 133 | 145 | 8 | 7 | 72.0 | 5 | 12 | 5 | 7.5 | 0 |
| 28 FT | 28 | 30 | 11 | 8 | 7 | 6.5 | 6 | 7 | 45.9 | 52.0 | 52.0 | 52.0 | 7 | 12 | 69.5 | 7 | 12 | 46.5 | 7 | 6.5 | 6 | 7 | 40.5 | 122 | 134 | 146 | 8 | 7 | 72.0 | 5 | 12 | 5 | 7.5 | 0 |
| 30 FT | 29 | 32 | 12 | 8 | 7 | 6 | 6 | 7.5 | 46.9 | 53.0 | 53.0 | 53.0 | 7 | 12 | 69.0 | 7 | 12 | 46.5 | 7 | 7 | 6 | 7.5 | 41.0 | 124 | 136 | 148 | 8 | 7 | 72.0 | 5 | 12 | 5 | 7 | 0 |
| 32 FT | 30 | 33 | 12 | 8 | 7 | 6 | 6 | 7.5 | 45.4 | 54.0 | 54.0 | 54.0 | 7 | 12 | 67.5 | 7 | 12 | 46.0 | 7 | 6.5 | 6 | 7 | 39.5 | 125 | 137 | 149 | 8 | 6.5 | 72.0 | 5 | 12 | 5 | 7 | 0 |
| 34 FT | 31 | 34 | 12 | 8 | 8 | 7.5 | 6 | 7.5 | 45.3 | 55.0 | 55.0 | 55.0 | 8 | 15 | 75.0 | 8 | 15 | 53.0 | 7 | 6.5 | 6 | 7 | 39.6 | 126 | 138 | 150 | 8 | 6.5 | 72.0 | 5 | 12 | 5 | 7 | 0 |
| 36 FT | 32 | 36 | 12 | 8 | 8 | 7 | 6 | 7 | 45.4 | 56.0 | 56.0 | 56.0 | 8 | 14 | 73.5 | 8 | 14 | 52.5 | 7 | 6.5 | 6 | 6.5 | 39.9 | 128 | 140 | 152 | 8 | 6 | 72.0 | 5 | 12 | 5 | 7 | 0 |
| 38 FT | 33 | 37 | 12 | 8 | 8 | 6.5 | 6 | 6.5 | 45.4 | 57.0 | 57.0 | 57.0 | 8 | 13 | 72.5 | 8 | 13 | 51.5 | 7 | 6.5 | 6 | 6.5 | 40.0 | 129 | 141 | 153 | 8 | 6 | 72.0 | 5 | 12 | 5 | 6.5 | 0 |
| 40 FT | 35 | 38 | 12 | 8 | 8 | 6.5 | 6 | 6.5 | 45.1 | 59.0 | 59.0 | 59.0 | 8 | 13 | 71.0 | 8 | 13 | 49.5 | 7 | 6 | 6 | 6 | 40.3 | 130 | 142 | 154 | 8 | 6 | 71.5 | 5 | 12 | 5 | 6 | 0 |
| 42 FT | 35 | 39 | 13 | 8 | 8 | 6 | 6 | 6.5 | 46.1 | 59.0 | 59.0 | 59.0 | 8 | 12 | 71.0 | 8 | 12 | 50.0 | 7 | 6 | 6 | 6 | 40.6 | 131 | 143 | 155 | 8 | 6 | 72.0 | 5 | 12 | 5 | 6.5 | 0 |
| 44 FT | 36 | 41 | 13 | 8 | 8 | 6 | 6 | 6.5 | 46.3 | 60.0 | 60.0 | 60.0 | 8 | 12 | 70.5 | 8 | 12 | 49.0 | 7 | 6 | 7 | 7 | 43.9 | 133 | 145 | 157 | 9 | 7 | 77.5 | 5 | 9 | 5 | 6 | 0 |
| 46 FT | 37 | 42 | 13 | 8 | 8 | 6 | 6 | 6 | 46.3 | 61.0 | 61.0 | 61.0 | 8 | 12 | 70.0 | 8 | 12 | 48.0 | 7 | 6 | 7 | 7 | 44.1 | 134 | 146 | 158 | 9 | 7 | 77.5 | 5 | 6.5 | 6 | 8.5 | 0 |
| 48 FT | 38 | 43 | 13 | 9 | 8 | 6 | 6 | 6 | 46.3 | 62.0 | 62.0 | 62.0 | 8 | 12 | 70.5 | 8 | 12 | 48.5 | 7 | 6 | 7 | 6.5 | 44.3 | 135 | 147 | 159 | 9 | 7 | 77.5 | 5 | 12 | 6 | 8 | 0 |
| 50 FT | 39 | 44 | 14 | 9 | 8 | 6 | 6 | 6 | 47.1 | 63.0 | 63.0 | 63.0 | 8 | 12 | 70.0 | 8 | 12 | 47.5 | 8 | 7.5 | 7 | 7 | 44.8 | 136 | 148 | 160 | 9 | 6.5 | 77.5 | 5 | 12 | 6 | 8 | 0 |

## SPAN (S) = 15 FT  HEIGHT (HT) = 11 FT OR 12 FT OR 13 FT

| DESIGN FILL | MEMBER THICKNESS | | | | TOP SLAB BARS | | | | | | | | | | | | BOTTOM SLAB BARS | | | | | | | | | | | | WALL BARS | | | | |
|---|---|---|---|---|---|---|---|---|---|---|---|---|---|---|---|---|---|---|---|---|---|---|---|---|---|---|---|---|---|---|---|---|---|
| | | | | | A1 BARS | | J3 BARS | | | K2 | | | H1 BARS | | | H2 BARS | | | A2 BARS | | J4 BARS | | | K3 | | | H3 BARS | | | B1 BARS | | B2 BARS | | |
| | TS | BS | TX | TI | SIZE | SPA. | SIZE | SPA. | C1 | HT=11′ | HT=12′ | HT=13′ | SIZE | SPA. | C5 | SIZE | SPA. | C6 | SIZE | SPA. | SIZE | SPA. | C4 | HT=11′ | HT=12′ | HT=13′ | SIZE | SPA. | C7 | SIZE | SPA. | SIZE | SPA. | G1 |
| 1 FT | 15 | 12 | 9 | 10 | 6 | 8 | 5 | 6.5 | 73.9 | 35.0 | 35.0 | 35.0 | 6 | 16 | 147.0 | 6 | 16 | 51.0 | 5 | 6 | 6 | 6 | 88.3 | 140 | 152 | 164 | 6 | 6 | 67.0 | 5 | 12 | 5 | 8.5 | 12 |
| 2 FT | 17 | 13 | 9 | 10 | 6 | 7.5 | 5 | 6.5 | 73.9 | 37.0 | 37.0 | 37.0 | 6 | 14 | 147.0 | 6 | 14 | 46.0 | 5 | 6 | 6 | 6 | 80.4 | 141 | 153 | 165 | 6 | 6 | 66.0 | 5 | 12 | 5 | 8.5 | 12 |
| 4 FT | 13 | 12 | 9 | 10 | 6 | 7 | 6 | 6 | 85.5 | 33.0 | 37.0 | 37.0 | 6 | 12 | 96.0 | 6 | 12 | 42.0 | 5 | 6 | 6 | 6 | 70.6 | 140 | 152 | 164 | 7 | 6 | 68.5 | 5 | 12 | 5 | 8.5 | 12 |
| 6 FT | 13 | 14 | 10 | 10 | 6 | 8 | 6 | 7 | 67.4 | 33.0 | 33.0 | 37.0 | 7 | 15 | 76.5 | 7 | 15 | 43.0 | 6 | 8 | 6 | 6.5 | 66.0 | 142 | 154 | 166 | 7 | 6.5 | 68.0 | 5 | 12 | 5 | 8 | 12 |
| 8 FT | 14 | 15 | 10 | 10 | 6 | 8 | 6 | 6.5 | 62.0 | 34.0 | 34.0 | 38.0 | 7 | 14 | 72.0 | 7 | 14 | 42.0 | 6 | 7.5 | 6 | 6.5 | 62.1 | 143 | 155 | 167 | 7 | 6 | 67.0 | 5 | 12 | 5 | 8 | 0 |
| 10 FT | 15 | 17 | 10 | 10 | 6 | 8 | 6 | 6.5 | 64.6 | 35.0 | 35.0 | 39.0 | 7 | 14 | 78.0 | 7 | 14 | 49.5 | 6 | 7 | 6 | 6.5 | 59.6 | 145 | 157 | 169 | 7 | 6.5 | 67.0 | 5 | 12 | 5 | 8 | 0 |
| 12 FT | 16 | 18 | 11 | 10 | 6 | 7.5 | 6 | 6.5 | 62.6 | 36.0 | 36.0 | 40.0 | 7 | 13 | 76.5 | 7 | 13 | 49.0 | 6 | 6.5 | 6 | 7.5 | 57.4 | 146 | 158 | 170 | 7 | 6 | 67.0 | 5 | 12 | 5 | 7.5 | 0 |
| 14 FT | 18 | 20 | 12 | 10 | 6 | 7 | 6 | 7 | 62.0 | 38.0 | 38.0 | 42.0 | 7 | 13 | 75.5 | 7 | 13 | 49.0 | 6 | 6 | 6 | 8 | 56.4 | 148 | 160 | 172 | 7 | 6.5 | 67.0 | 5 | 12 | 5 | 7 | 0 |
| 16 FT | 19 | 21 | 12 | 10 | 6 | 6.5 | 6 | 6.5 | 60.9 | 39.0 | 39.0 | 43.0 | 7 | 13 | 74.5 | 7 | 13 | 48.5 | 7 | 8 | 6 | 7.5 | 55.4 | 149 | 161 | 173 | 7 | 6 | 66.5 | 5 | 12 | 5 | 7 | 0 |
| 18 FT | 21 | 22 | 12 | 10 | 6 | 6 | 6 | 6.5 | 59.8 | 41.0 | 45.0 | 45.0 | 7 | 13 | 74.0 | 7 | 13 | 48.5 | 7 | 7 | 6 | 6 | 54.6 | 150 | 162 | 174 | 7 | 6 | 66.5 | 5 | 12 | 5 | 7 | 0 |
| 20 FT | 22 | 24 | 13 | 10 | 6 | 6 | 6 | 6.5 | 59.9 | 42.0 | 42.0 | 46.0 | 7 | 12 | 73.5 | 7 | 12 | 48.5 | 7 | 7 | 6 | 7.5 | 54.4 | 152 | 164 | 176 | 7 | 6 | 66.5 | 5 | 12 | 5 | 6.5 | 0 |
| 22 FT | 23 | 26 | 13 | 10 | 7 | 7 | 6 | 6 | 59.3 | 43.0 | 43.0 | 47.0 | 7 | 12 | 72.5 | 7 | 12 | 48.0 | 7 | 7 | 6 | 7 | 53.9 | 154 | 166 | 178 | 7 | 6 | 66.5 | 5 | 12 | 5 | 6.5 | 0 |
| 24 FT | 25 | 28 | 14 | 10 | 7 | 7 | 6 | 6 | 59.5 | 45.0 | 45.0 | 49.0 | 7 | 12 | 71.5 | 7 | 12 | 48.0 | 7 | 7 | 6 | 7.5 | 54.0 | 156 | 168 | 180 | 7 | 6 | 66.5 | 5 | 12 | 5 | 6 | 0 |
| 26 FT | 26 | 29 | 14 | 10 | 7 | 6.5 | 6 | 6 | 59.0 | 50.0 | 50.0 | 50.0 | 7 | 12 | 71.0 | 7 | 12 | 47.5 | 7 | 7 | 6 | 7.5 | 53.6 | 157 | 169 | 181 | 8 | 7 | 72.5 | 5 | 12 | 5 | 6 | 0 |
| 28 FT | 27 | 31 | 15 | 10 | 7 | 6 | 6 | 6 | 59.6 | 51.0 | 51.0 | 51.0 | 7 | 12 | 70.5 | 7 | 12 | 47.5 | 7 | 7 | 6 | 7.5 | 53.9 | 159 | 171 | 183 | 8 | 7 | 72.5 | 5 | 12 | 6 | 8 | 0 |
| 30 FT | 29 | 32 | 15 | 10 | 7 | 6 | 7 | 8 | 64.3 | 53.0 | 53.0 | 53.0 | 7 | 12 | 69.0 | 7 | 12 | 47.0 | 7 | 6.5 | 6 | 7.5 | 54.0 | 160 | 172 | 184 | 8 | 7 | 72.5 | 5 | 12 | 6 | 8 | 0 |
| 32 FT | 30 | 33 | 16 | 10 | 7 | 6 | 6 | 6 | 59.9 | 54.0 | 54.0 | 54.0 | 7 | 12 | 68.0 | 7 | 12 | 46.5 | 7 | 6 | 6 | 7 | 54.3 | 161 | 173 | 185 | 8 | 6.5 | 72.5 | 5 | 12 | 6 | 8 | 0 |
| 34 FT | 31 | 35 | 16 | 10 | 8 | 7.5 | 6 | 6 | 58.3 | 55.0 | 55.0 | 55.0 | 8 | 15 | 75.0 | 8 | 15 | 53.0 | 7 | 6.5 | 6 | 6.5 | 52.6 | 163 | 175 | 187 | 8 | 6.5 | 72.5 | 5 | 12 | 6 | 8 | 0 |
| 36 FT | 32 | 36 | 16 | 10 | 8 | 7.5 | 7 | 7.5 | 63.1 | 56.0 | 56.0 | 56.0 | 8 | 14 | 74.0 | 8 | 14 | 52.5 | 7 | 6.5 | 6 | 6.5 | 52.8 | 164 | 176 | 188 | 8 | 6 | 72.5 | 5 | 12 | 6 | 8 | 0 |
| 38 FT | 33 | 37 | 16 | 10 | 8 | 7 | 7 | 7 | 63.1 | 57.0 | 57.0 | 57.0 | 8 | 14 | 72.5 | 8 | 14 | 52.0 | 7 | 6 | 6 | 6.5 | 52.9 | 165 | 177 | 189 | 8 | 6 | 72.5 | 5 | 12 | 6 | 8 | 0 |
| 40 FT | 34 | 38 | 17 | 10 | 8 | 7 | 7 | 7.5 | 63.9 | 58.0 | 58.0 | 58.0 | 8 | 14 | 72.0 | 8 | 14 | 51.0 | 7 | 6 | 6 | 6 | 53.3 | 166 | 178 | 190 | 8 | 6 | 72.5 | 5 | 12 | 6 | 7.5 | 0 |
| 42 FT | 35 | 40 | 18 | 10 | 8 | 6.5 | 7 | 7.5 | 64.8 | 59.0 | 59.0 | 59.0 | 8 | 13 | 71.5 | 8 | 13 | 50.0 | 7 | 6 | 6 | 6 | 53.8 | 168 | 180 | 192 | 9 | 7 | 78.5 | 5 | 12 | 6 | 7 | 0 |
| 44 FT | 36 | 41 | 18 | 10 | 8 | 6.5 | 7 | 7.5 | 64.6 | 60.0 | 60.0 | 66.0 | 8 | 13 | 71.0 | 8 | 13 | 49.5 | 7 | 6 | 7 | 8 | 56.9 | 169 | 181 | 193 | 9 | 7 | 78.5 | 5 | 12 | 6 | 7 | 0 |
| 46 FT | 37 | 42 | 18 | 10 | 8 | 6.5 | 7 | 6.5 | 64.6 | 61.0 | 61.0 | 67.0 | 8 | 12 | 70.5 | 8 | 12 | 48.5 | 7 | 6 | 7 | 7.5 | 57.0 | 170 | 182 | 194 | 9 | 7 | 78.5 | 5 | 12 | 6 | 7 | 0 |
| 48 FT | 38 | 43 | 19 | 10 | 8 | 6 | 7 | 7 | 65.4 | 62.0 | 62.0 | 68.0 | 8 | 13 | 69.5 | 8 | 13 | 48.0 | 8 | 7.5 | 7 | 7.5 | 57.5 | 171 | 183 | 195 | 9 | 7 | 78.5 | 5 | 12 | 6 | 6.5 | 0 |
| 50 FT | 39 | 44 | 19 | 10 | 8 | 6 | 7 | 6.5 | 65.3 | 63.0 | 63.0 | 69.0 | 8 | 13 | 69.0 | 8 | 13 | 47.5 | 8 | 7.5 | 7 | 7 | 57.6 | 172 | 184 | 196 | 9 | 6.5 | 78.5 | 5 | 12 | 6 | 6.5 | 0 |

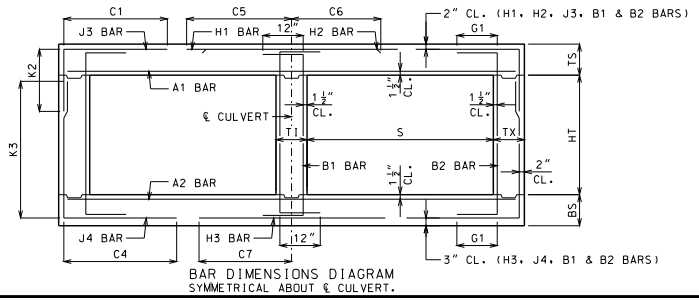


BAR DIMENSIONS DIAGRAM
SYMMETRICAL ABOUT ℄ CULVERT.

GENERAL NOTES:

IF DESIGN FILL IS BETWEEN TABULATED DESIGN FILLS, USE THE NEXT GREATER TABULATED DESIGN FILL, EXCEPT FOR DESIGN FILLS BETWEEN 2 FEET AND 4 FEET. FOR DESIGN FILLS BETWEEN 2 FEET AND 4 FEET USE THE GREATER MEMBER THICKNESS, AREA OF REINFORCEMENT AND BAR DIMENSIONS FROM THE 2 FEET AND 4 FEET TABULATED DESIGN FILLS. AREA OF REINFORCEMENT EQUALS BAR AREA PER FOOT SPACING.

SPECIAL DESIGNS ARE REQUIRED WHEN THE DESIGN FILL IS LESS THAN 1 FOOT OR GREATER THAN 50 FEET.

DIMENSIONS ARE IN INCHES UNLESS OTHERWISE SPECIFIED.

DESIGN FILLS ARE MEASURED FROM THE TOP OF TOP SLAB TO THE TOP OF EARTH FILL OR ROADWAY.

CULVERTS MEET STRENGTH AND SERVICEABILITY REQUIREMENTS FOR THE DESIGN VEHICULAR LIVE LOAD HL-93 MINUS THE LANE LOAD.


MISSOURI HIGHWAYS AND TRANSPORTATION COMMISSION
105 WEST CAPITOL
JEFFERSON CITY, MO 65102
1-888-ASK-MODOT (1-888-275-6636)


STATE OF MISSOURI
DENNIS W. HECKMANN
NUMBER PE-27141
PROFESSIONAL ENGINEER
THIS SHEET HAS BEEN SIGNED, SEALED AND DATED ELECTRONICALLY.

# CONCRETE DOUBLE BOX CULVERT

MEMBER THICKNESS
BAR SIZE, SPACING & DIMENSIONS

SPAN (S): 15 FEET
HEIGHT (HT): 8 THRU 13 FEET

DATE EFFECTIVE: 10/01/2011
DATE PREPARED: 9/8/2011

703.47

SHEET NO.
24 OF 27

IF A SEAL IS PRESENT ON THIS SHEET IT HAS BEEN ELECTRONICALLY SEALED AND DATED.

SPAN (S) = 15 FT  HEIGHT (HT) = 14 FT OR 15 FT OR 16 FT

| DESIGN FILL | MEMBER THICKNESS | | | | TOP SLAB BARS | | | | | | | | | | | | | BOTTOM SLAB BARS | | | | | | | | | | | | WALL BARS | | | | |
|---|---|---|---|---|---|---|---|---|---|---|---|---|---|---|---|---|---|---|---|---|---|---|---|---|---|---|---|---|---|---|---|---|---|
| | | | | | A1 BARS | | J3 BARS | | | | | | H1 BARS | | | H2 BARS | | | A2 BARS | | J4 BARS | | | | | H3 BARS | | | B1 BARS | | B2 BARS | | |
| | | | | | | | | | | K2 | | | | | | | | | | | | | K3 | | | | | | | | | |
| | TS | BS | TX | TI | SIZE | SPA. | SIZE | SPA. | C1 | HT=14' | HT=15' | HT=16' | SIZE | SPA. | C5 | SIZE | SPA. | C6 | SIZE | SPA. | SIZE | SPA. | C4 | HT=14' | HT=15' | HT=16' | SIZE | SPA. | C7 | SIZE | SPA. | SIZE | SPA. | G1 |
| 1 FT | 15 | 13 | 12 | 13 | 6 | 8 | 6 | 8.5 | 79.3 | 35.0 | 35.0 | 39.0 | 6 | 16 | 152.5 | 6 | 16 | 50.0 | 5 | 6 | 6 | 7 | 102.4 | 177 | 189 | 201 | 6 | 6 | 67.5 | 5 | 11 | 5 | 7 | 12 |
| 2 FT | 16 | 14 | 12 | 13 | 6 | 7.5 | 5 | 6 | 76.3 | 36.0 | 36.0 | 36.0 | 6 | 15 | 149.5 | 6 | 15 | 48.5 | 6 | 8 | 6 | 7.5 | 96.3 | 178 | 190 | 202 | 6 | 6 | 67.0 | 5 | 12 | 5 | 7 | 12 |
| 4 FT | 12 | 13 | 12 | 13 | 6 | 7 | 6 | 7 | 101.4 | 36.0 | 36.0 | 36.0 | 6 | 12 | 86.5 | 6 | 12 | 41.5 | 5 | 6 | 6 | 6.5 | 88.5 | 177 | 189 | 201 | 7 | 6.5 | 69.0 | 5 | 10.5 | 5 | 7 | 12 |
| 6 FT | 13 | 14 | 12 | 13 | 6 | 8 | 6 | 6.5 | 86.3 | 37.0 | 37.0 | 37.0 | 7 | 16 | 74.5 | 7 | 16 | 43.5 | 6 | 8 | 6 | 6.5 | 82.9 | 178 | 190 | 202 | 7 | 6 | 68.0 | 5 | 12 | 5 | 7 | 12 |
| 8 FT | 13 | 15 | 13 | 13 | 6 | 8 | 6 | 6.5 | 76.4 | 37.0 | 37.0 | 37.0 | 7 | 14 | 70.5 | 7 | 14 | 42.5 | 6 | 7.5 | 6 | 6.5 | 77.9 | 179 | 191 | 203 | 7 | 6 | 68.0 | 5 | 12 | 5 | 6.5 | 0 |
| 10 FT | 15 | 17 | 13 | 13 | 6 | 8 | 6 | 6 | 80.6 | 39.0 | 39.0 | 39.0 | 7 | 14 | 77.5 | 7 | 14 | 50.5 | 6 | 7 | 6 | 6.5 | 76.0 | 181 | 193 | 205 | 7 | 6.5 | 67.5 | 5 | 12 | 5 | 6.5 | 0 |
| 12 FT | 16 | 18 | 14 | 13 | 6 | 8 | 6 | 6 | 78.4 | 40.0 | 40.0 | 40.0 | 7 | 14 | 76.5 | 7 | 14 | 50.0 | 6 | 6.5 | 6 | 6.5 | 73.8 | 182 | 194 | 206 | 7 | 6 | 67.5 | 5 | 12 | 5 | 6 | 0 |
| 14 FT | 17 | 20 | 14 | 13 | 6 | 7.5 | 7 | 7.5 | 81.6 | 41.0 | 41.0 | 41.0 | 7 | 13 | 75.5 | 7 | 13 | 50.0 | 6 | 6 | 6 | 6 | 72.9 | 184 | 196 | 208 | 7 | 6 | 67.5 | 5 | 12 | 5 | 6 | 0 |
| 16 FT | 19 | 21 | 15 | 13 | 6 | 6.5 | 7 | 8 | 80.9 | 43.0 | 43.0 | 49.0 | 7 | 13 | 75.0 | 7 | 13 | 49.5 | 7 | 8 | 7 | 8 | 74.4 | 185 | 197 | 209 | 7 | 6 | 67.0 | 5 | 12 | 6 | 8 | 0 |
| 18 FT | 20 | 23 | 16 | 13 | 6 | 6.5 | 7 | 8 | 80.1 | 44.0 | 44.0 | 44.0 | 7 | 13 | 74.0 | 7 | 13 | 49.5 | 7 | 7.5 | 6 | 6 | 70.8 | 187 | 199 | 211 | 7 | 6 | 67.0 | 5 | 12 | 6 | 8 | 0 |
| 20 FT | 21 | 24 | 17 | 13 | 6 | 6 | 7 | 7.5 | 79.5 | 45.0 | 45.0 | 45.0 | 7 | 12 | 73.5 | 7 | 12 | 49.5 | 7 | 7 | 6 | 6 | 69.8 | 188 | 200 | 212 | 7 | 6 | 67.0 | 5 | 12 | 6 | 7.5 | 0 |
| 22 FT | 23 | 26 | 17 | 13 | 7 | 7.5 | 7 | 7.5 | 78.9 | 47.0 | 47.0 | 47.0 | 7 | 12 | 73.0 | 7 | 12 | 49.0 | 7 | 7 | 6 | 6 | 69.4 | 190 | 202 | 214 | 7 | 6 | 67.0 | 5 | 12 | 6 | 7.5 | 0 |
| 24 FT | 24 | 28 | 18 | 13 | 7 | 7 | 7 | 7.5 | 78.6 | 48.0 | 48.0 | 48.0 | 7 | 12 | 72.5 | 7 | 12 | 49.0 | 7 | 7 | 6 | 6.5 | 69.0 | 192 | 204 | 216 | 7 | 6 | 67.0 | 5 | 12 | 6 | 7 | 0 |
| 26 FT | 26 | 29 | 18 | 13 | 7 | 7 | 7 | 7 | 78.1 | 50.0 | 50.0 | 50.0 | 7 | 12 | 71.5 | 7 | 12 | 49.0 | 7 | 6 | 6 | 6 | 68.5 | 193 | 205 | 217 | 8 | 7 | 73.0 | 5 | 12 | 6 | 7 | 0 |
| 28 FT | 27 | 31 | 19 | 13 | 7 | 6.5 | 7 | 7 | 78.5 | 51.0 | 51.0 | 51.0 | 7 | 12 | 71.0 | 7 | 12 | 48.5 | 7 | 6.5 | 6 | 6 | 68.6 | 195 | 207 | 219 | 8 | 7 | 73.0 | 5 | 12 | 6 | 6.5 | 0 |
| 30 FT | 28 | 32 | 19 | 13 | 7 | 6 | 7 | 6 | 78.1 | 52.0 | 52.0 | 52.0 | 7 | 12 | 70.5 | 7 | 12 | 48.5 | 7 | 6.5 | 6 | 6 | 68.5 | 196 | 208 | 220 | 8 | 7 | 73.0 | 5 | 12 | 6 | 6.5 | 0 |
| 32 FT | 30 | 34 | 20 | 13 | 7 | 6.5 | 7 | 6.5 | 78.8 | 54.0 | 54.0 | 54.0 | 7 | 12 | 69.0 | 7 | 12 | 47.0 | 7 | 6.5 | 6 | 6 | 68.9 | 198 | 210 | 222 | 8 | 6.5 | 73.0 | 5 | 12 | 6 | 6.5 | 0 |
| 34 FT | 31 | 35 | 20 | 13 | 7 | 6 | 7 | 6.5 | 76.3 | 55.0 | 55.0 | 55.0 | 8 | 15 | 76.0 | 8 | 15 | 54.0 | 7 | 6.5 | 6 | 6 | 66.4 | 199 | 211 | 223 | 8 | 6.5 | 73.0 | 5 | 12 | 6 | 6.5 | 0 |
| 36 FT | 32 | 36 | 21 | 13 | 8 | 7.5 | 7 | 6.5 | 76.8 | 56.0 | 56.0 | 56.0 | 8 | 14 | 75.0 | 8 | 14 | 53.5 | 7 | 6 | 6 | 6 | 66.6 | 200 | 212 | 224 | 8 | 6 | 73.0 | 5 | 12 | 6 | 6 | 0 |
| 38 FT | 33 | 37 | 21 | 13 | 8 | 7 | 7 | 6 | 76.8 | 57.0 | 57.0 | 57.0 | 8 | 14 | 74.0 | 8 | 14 | 53.0 | 7 | 6 | 6 | 6 | 66.6 | 201 | 213 | 225 | 8 | 6 | 73.0 | 5 | 12 | 6 | 6 | 0 |
| 40 FT | 34 | 39 | 22 | 13 | 8 | 7 | 7 | 6 | 77.5 | 58.0 | 58.0 | 64.0 | 8 | 14 | 73.0 | 8 | 14 | 52.0 | 7 | 6 | 7 | 7.5 | 70.1 | 203 | 215 | 227 | 8 | 6 | 73.0 | 5 | 12 | 6 | 6 | 0 |
| 42 FT | 35 | 40 | 23 | 13 | 8 | 7 | 7 | 6.5 | 78.1 | 59.0 | 59.0 | 65.0 | 8 | 13 | 72.5 | 8 | 13 | 51.0 | 7 | 6 | 7 | 7.5 | 70.4 | 204 | 216 | 228 | 9 | 7 | 79.0 | 5 | 12 | 7 | 7.5 | 0 |
| 44 FT | 35 | 41 | 24 | 13 | 8 | 6 | 7 | 6 | 78.9 | 65.0 | 65.0 | 65.0 | 8 | 12 | 72.5 | 8 | 12 | 52.0 | 8 | 7.5 | 7 | 7 | 70.6 | 205 | 217 | 229 | 9 | 7 | 79.5 | 5 | 12 | 7 | 8 | 0 |
| 46 FT | 36 | 42 | 25 | 13 | 8 | 6 | 7 | 6 | 79.5 | 66.0 | 66.0 | 66.0 | 8 | 12 | 72.0 | 8 | 12 | 51.0 | 8 | 7 | 7 | 7.5 | 70.9 | 206 | 218 | 230 | 9 | 7 | 79.5 | 5 | 12 | 7 | 8 | 0 |
| 48 FT | 37 | 43 | 26 | 13 | 8 | 6.5 | 7 | 6 | 80.3 | 67.0 | 67.0 | 67.0 | 8 | 12 | 71.5 | 8 | 12 | 50.0 | 8 | 6.5 | 7 | 7.5 | 71.3 | 207 | 219 | 231 | 9 | 7 | 79.5 | 5 | 12 | 7 | 8 | 0 |
| 50 FT | 38 | 45 | 27 | 13 | 8 | 6 | 7 | 6 | 81.1 | 68.0 | 68.0 | 68.0 | 8 | 12 | 71.0 | 8 | 12 | 49.0 | 8 | 7 | 7 | 7 | 71.8 | 209 | 221 | 233 | 9 | 6.5 | 79.5 | 5 | 12 | 7 | 8 | 0 |

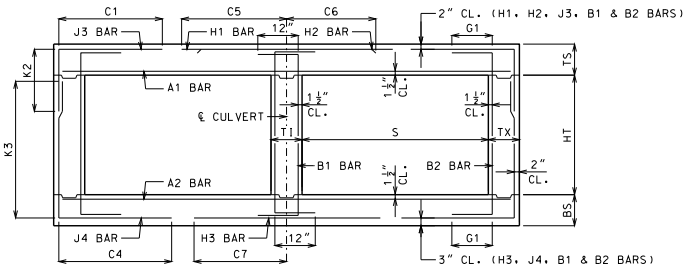


BAR DIMENSIONS DIAGRAM
SYMMETRICAL ABOUT ℄ CULVERT.

GENERAL NOTES:

IF DESIGN FILL IS BETWEEN TABULATED DESIGN FILLS, USE THE NEXT GREATER TABULATED DESIGN FILL, EXCEPT FOR DESIGN FILLS BETWEEN 2 FEET AND 4 FEET. FOR DESIGN FILLS BETWEEN 2 FEET AND 4 FEET USE THE GREATER MEMBER THICKNESS, AREA OF REINFORCEMENT AND BAR DIMENSIONS FROM THE 2 FEET AND 4 FEET TABULATED DESIGN FILLS. AREA OF REINFORCEMENT EQUALS BAR AREA PER FOOT SPACING.

SPECIAL DESIGNS ARE REQUIRED WHEN THE DESIGN FILL IS LESS THAN 1 FOOT OR GREATER THAN 50 FEET.

DIMENSIONS ARE IN INCHES UNLESS OTHERWISE SPECIFIED.

DESIGN FILLS ARE MEASURED FROM THE TOP OF TOP SLAB TO THE TOP OF EARTH FILL OR ROADWAY.

CULVERTS MEET STRENGTH AND SERVICEABILITY REQUIREMENTS FOR THE DESIGN VEHICULAR LIVE LOAD HL-93 MINUS THE LANE LOAD.


MISSOURI HIGHWAYS AND TRANSPORTATION COMMISSION
105 WEST CAPITOL
JEFFERSON CITY, MO 65102
1-888-ASK-MODOT (1-888-275-6636)


STATE OF MISSOURI
DENNIS W. HECKMANN
NUMBER PE-27141
PROFESSIONAL ENGINEER
THIS SHEET HAS BEEN SIGNED, SEALED AND DATED ELECTRONICALLY.

# CONCRETE DOUBLE BOX CULVERT

MEMBER THICKNESS
BAR SIZE, SPACING & DIMENSIONS

SPAN (S): 15 FEET
HEIGHT (HT): 14 THRU 16 FEET

DATE EFFECTIVE: 10/01/2011
DATE PREPARED: 9/8/2011

703.47

SHEET NO.
25 OF 27

IF A SEAL IS PRESENT ON THIS SHEET IT HAS BEEN ELECTRONICALLY SEALED AND DATED.

## SPAN (S) = 16 FT  HEIGHT (HT) = 8 FT OR 9 FT OR 10 FT

| DESIGN FILL | MEMBER THICKNESS | | | | TOP SLAB BARS | | | | | | | | | | | | BOTTOM SLAB BARS | | | | | | | | | | | WALL BARS | | | | |
|---|---|---|---|---|---|---|---|---|---|---|---|---|---|---|---|---|---|---|---|---|---|---|---|---|---|---|---|---|---|---|---|---|
| | | | | | A1 BARS | | J3 BARS | | | | | | H1 BARS | | | H2 BARS | | | A2 BARS | | J4 BARS | | | | | H3 BARS | | | B1 BARS | | B2 BARS | | |
| | | | | | | | | | | K2 | | | | | | | | | | | | | K3 | | | | | | | | | |
| | TS | BS | TX | TI | SIZE | SPA. | SIZE | SPA. | C1 | HT=8′ | HT=9′ | HT=10′ | SIZE | SPA. | C5 | SIZE | SPA. | C6 | SIZE | SPA. | SIZE | SPA. | C4 | HT=8′ | HT=9′ | HT=10′ | SIZE | SPA. | C7 | SIZE | SPA. | SIZE | SPA. | G1 |
| 1 FT | 15 | 12 | 8 | 8 | 6 | 7.5 | 5 | 8 | 76.5 | 35.0 | 35.0 | 35.0 | 6 | 15 | 154.5 | 6 | 15 | 54.0 | 5 | 6 | 6 | 7 | 66.9 | 104 | 116 | 128 | 7 | 7 | 72.5 | 5 | 12 | 5 | 12 | 12 |
| 2 FT | 17 | 13 | 8 | 8 | 6 | 7 | 5 | 6.5 | 76.5 | 37.0 | 37.0 | 37.0 | 6 | 14 | 154.5 | 6 | 14 | 50.0 | 5 | 6 | 5 | 6 | 56.4 | 105 | 117 | 129 | 7 | 7 | 71.5 | 5 | 12 | 5 | 12 | 12 |
| 4 FT | 13 | 13 | 8 | 8 | 6 | 6.5 | 6 | 7 | 55.6 | 33.0 | 33.0 | 33.0 | 7 | 14 | 97.0 | 7 | 14 | 45.5 | 5 | 6 | 5 | 6 | 49.6 | 105 | 117 | 129 | 7 | 6 | 71.0 | 5 | 12 | 5 | 12 | 12 |
| 6 FT | 14 | 14 | 8 | 8 | 6 | 7 | 5 | 6 | 47.1 | 34.0 | 34.0 | 34.0 | 7 | 14 | 82.0 | 7 | 14 | 44.0 | 6 | 8 | 5 | 6 | 45.1 | 106 | 118 | 130 | 7 | 6 | 70.5 | 5 | 12 | 5 | 12 | 12 |
| 8 FT | 15 | 16 | 8 | 8 | 6 | 7.5 | 5 | 6 | 48.4 | 35.0 | 35.0 | 35.0 | 7 | 13 | 84.0 | 7 | 13 | 51.0 | 6 | 7 | 5 | 7 | 41.9 | 108 | 120 | 132 | 7 | 6 | 70.0 | 5 | 12 | 5 | 11 | 0 |
| 10 FT | 16 | 17 | 8 | 8 | 6 | 7 | 6 | 8 | 49.6 | 36.0 | 36.0 | 36.0 | 7 | 12 | 81.5 | 7 | 12 | 50.5 | 6 | 7 | 5 | 6.5 | 39.9 | 109 | 121 | 133 | 7 | 6 | 69.5 | 5 | 12 | 5 | 10 | 0 |
| 12 FT | 18 | 19 | 8 | 8 | 6 | 7 | 6 | 7.5 | 47.5 | 38.0 | 38.0 | 38.0 | 7 | 12 | 80.0 | 7 | 12 | 50.0 | 6 | 6 | 5 | 6 | 38.6 | 111 | 123 | 135 | 7 | 6 | 69.5 | 5 | 12 | 5 | 9.5 | 0 |
| 14 FT | 19 | 20 | 8 | 8 | 6 | 6.5 | 6 | 7 | 46.0 | 39.0 | 39.0 | 43.0 | 7 | 12 | 79.0 | 7 | 12 | 49.5 | 6 | 6 | 6 | 7.5 | 40.5 | 112 | 124 | 136 | 7 | 6 | 69.5 | 5 | 12 | 5 | 9.5 | 0 |
| 16 FT | 21 | 22 | 8 | 8 | 6 | 6 | 6 | 7 | 44.9 | 45.0 | 45.0 | 45.0 | 7 | 12 | 78.0 | 7 | 12 | 49.5 | 7 | 7.5 | 6 | 7 | 39.9 | 114 | 126 | 138 | 7 | 6 | 69.5 | 5 | 12 | 5 | 8.5 | 0 |
| 18 FT | 22 | 23 | 9 | 8 | 6 | 6 | 6 | 7.5 | 45.1 | 42.0 | 42.0 | 42.0 | 8 | 15 | 85.0 | 8 | 15 | 57.0 | 7 | 6.5 | 5 | 6 | 36.8 | 115 | 127 | 139 | 8 | 6.5 | 75.5 | 5 | 12 | 5 | 8.5 | 0 |
| 20 FT | 24 | 25 | 9 | 8 | 7 | 7.5 | 6 | 7 | 44.4 | 48.0 | 48.0 | 48.0 | 8 | 15 | 84.0 | 8 | 15 | 57.0 | 7 | 7 | 6 | 7 | 39.4 | 117 | 129 | 141 | 8 | 7 | 75.5 | 5 | 12 | 5 | 8.5 | 0 |
| 22 FT | 25 | 27 | 10 | 8 | 7 | 7 | 6 | 7.5 | 45.0 | 45.0 | 45.0 | 49.0 | 8 | 14 | 83.5 | 8 | 14 | 56.5 | 7 | 6.5 | 6 | 7 | 39.5 | 119 | 131 | 143 | 8 | 7 | 75.5 | 5 | 12 | 5 | 8 | 0 |
| 24 FT | 27 | 29 | 10 | 8 | 7 | 6.5 | 6 | 6.5 | 44.5 | 51.0 | 51.0 | 51.0 | 8 | 14 | 82.5 | 8 | 14 | 56.5 | 7 | 6.5 | 6 | 6.5 | 39.3 | 121 | 133 | 145 | 8 | 7 | 75.0 | 5 | 12 | 5 | 8 | 0 |
| 26 FT | 28 | 31 | 11 | 8 | 7 | 6 | 6 | 7.5 | 45.3 | 52.0 | 52.0 | 52.0 | 8 | 14 | 81.5 | 8 | 14 | 56.0 | 7 | 6.5 | 6 | 7 | 39.5 | 123 | 135 | 147 | 8 | 7 | 75.0 | 5 | 12 | 5 | 7.5 | 0 |
| 28 FT | 30 | 32 | 11 | 8 | 7 | 6 | 6 | 7 | 44.9 | 54.0 | 54.0 | 54.0 | 8 | 14 | 80.5 | 8 | 14 | 56.0 | 7 | 6.5 | 6 | 6.5 | 39.6 | 124 | 136 | 148 | 8 | 7 | 75.0 | 5 | 12 | 5 | 7.5 | 0 |
| 30 FT | 31 | 34 | 11 | 8 | 8 | 7.5 | 6 | 6 | 44.9 | 55.0 | 55.0 | 55.0 | 8 | 14 | 79.5 | 8 | 14 | 55.5 | 7 | 6.5 | 6 | 6 | 39.6 | 126 | 138 | 150 | 8 | 6.5 | 75.0 | 5 | 12 | 5 | 7 | 0 |
| 32 FT | 32 | 35 | 12 | 8 | 8 | 7 | 6 | 7 | 45.8 | 56.0 | 56.0 | 56.0 | 8 | 14 | 78.5 | 8 | 14 | 55.0 | 7 | 6 | 6 | 6.5 | 40.0 | 127 | 139 | 151 | 8 | 6.5 | 75.0 | 5 | 12 | 5 | 7 | 0 |
| 34 FT | 33 | 36 | 12 | 8 | 8 | 7 | 6 | 7 | 45.3 | 57.0 | 57.0 | 57.0 | 8 | 14 | 77.5 | 8 | 14 | 54.5 | 7 | 6 | 6 | 6.5 | 39.3 | 128 | 140 | 152 | 8 | 6 | 75.0 | 5 | 12 | 5 | 7 | 0 |
| 36 FT | 35 | 38 | 12 | 8 | 8 | 6.5 | 6 | 6.5 | 45.3 | 59.0 | 59.0 | 59.0 | 8 | 13 | 75.0 | 8 | 13 | 52.0 | 7 | 6 | 6 | 6 | 39.3 | 130 | 142 | 154 | 8 | 6 | 75.0 | 5 | 12 | 5 | 7 | 0 |
| 38 FT | 36 | 39 | 12 | 8 | 8 | 6.5 | 6 | 6.5 | 45.3 | 60.0 | 60.0 | 60.0 | 8 | 13 | 74.0 | 8 | 13 | 51.5 | 7 | 6 | 6 | 6 | 39.3 | 131 | 143 | 155 | 8 | 6 | 75.0 | 5 | 12 | 5 | 6.5 | 0 |
| 40 FT | 37 | 41 | 12 | 8 | 8 | 6.5 | 6 | 6 | 45.3 | 61.0 | 61.0 | 61.0 | 8 | 12 | 73.5 | 8 | 12 | 50.5 | 7 | 6 | 7 | 6.5 | 42.5 | 133 | 145 | 157 | 9 | 7 | 80.5 | 5 | 11 | 5 | 6 | 0 |
| 42 FT | 38 | 42 | 12 | 8 | 8 | 6 | 6 | 6 | 45.3 | 62.0 | 62.0 | 62.0 | 8 | 12 | 73.0 | 8 | 12 | 50.0 | 7 | 6 | 7 | 6 | 42.6 | 134 | 146 | 158 | 9 | 7 | 80.5 | 5 | 7 | 6 | 8 | 0 |
| 44 FT | 39 | 43 | 13 | 9 | 8 | 6 | 6 | 6 | 45.8 | 63.0 | 63.0 | 63.0 | 8 | 12 | 73.5 | 8 | 12 | 50.5 | 8 | 7.5 | 7 | 6.5 | 43.1 | 135 | 147 | 159 | 9 | 7 | 81.0 | 5 | 12 | 5 | 6 | 0 |
| 46 FT | 40 | 44 | 13 | 9 | 8 | 6 | 7 | 7 | 50.8 | 70.0 | 70.0 | 70.0 | 8 | 12 | 73.0 | 8 | 12 | 49.5 | 8 | 7.5 | 7 | 6.5 | 43.4 | 136 | 148 | 160 | 9 | 6.5 | 80.5 | 5 | 12 | 6 | 8 | 0 |
| 48 FT | 41 | 45 | 13 | 9 | 9 | 7.5 | 7 | 7 | 50.8 | 71.0 | 71.0 | 71.0 | 9 | 15 | 80.5 | 9 | 15 | 56.5 | 8 | 7 | 7 | 6.5 | 43.5 | 137 | 149 | 161 | 9 | 6.5 | 80.5 | 5 | 12 | 6 | 7.5 | 0 |
| 50 FT | 42 | 46 | 13 | 9 | 9 | 7 | 7 | 6.5 | 50.8 | 72.0 | 72.0 | 72.0 | 9 | 14 | 80.0 | 9 | 14 | 56.0 | 8 | 7 | 7 | 6 | 43.8 | 138 | 150 | 162 | 9 | 6.5 | 80.5 | 5 | 9.5 | 6 | 7 | 0 |

## SPAN (S) = 16 FT  HEIGHT (HT) = 11 FT OR 12 FT OR 13 FT

| DESIGN FILL | MEMBER THICKNESS | | | | TOP SLAB BARS | | | | | | | | | | | | BOTTOM SLAB BARS | | | | | | | | | | | WALL BARS | | | | |
|---|---|---|---|---|---|---|---|---|---|---|---|---|---|---|---|---|---|---|---|---|---|---|---|---|---|---|---|---|---|---|---|---|
| | | | | | A1 BARS | | J3 BARS | | | | | | H1 BARS | | | H2 BARS | | | A2 BARS | | J4 BARS | | | | | H3 BARS | | | B1 BARS | | B2 BARS | | |
| | | | | | | | | | | K2 | | | | | | | | | | | | | K3 | | | | | | | | | |
| | TS | BS | TX | TI | SIZE | SPA. | SIZE | SPA. | C1 | HT=11′ | HT=12′ | HT=13′ | SIZE | SPA. | C5 | SIZE | SPA. | C6 | SIZE | SPA. | SIZE | SPA. | C4 | HT=11′ | HT=12′ | HT=13′ | SIZE | SPA. | C7 | SIZE | SPA. | SIZE | SPA. | G1 |
| 1 FT | 15 | 13 | 9 | 10 | 6 | 7.5 | 5 | 6 | 77.5 | 35.0 | 35.0 | 35.0 | 6 | 15 | 155.5 | 6 | 15 | 53.5 | 5 | 6 | 6 | 6 | 89.5 | 141 | 153 | 165 | 6 | 6 | 70.0 | 5 | 11.5 | 5 | 8.5 | 12 |
| 2 FT | 17 | 14 | 9 | 10 | 6 | 7.5 | 5 | 6.5 | 77.5 | 37.0 | 37.0 | 37.0 | 6 | 14 | 155.5 | 6 | 14 | 50.0 | 6 | 8 | 6 | 6.5 | 79.8 | 142 | 154 | 166 | 6 | 6 | 69.5 | 5 | 12 | 5 | 8.5 | 12 |
| 4 FT | 13 | 13 | 10 | 10 | 6 | 6.5 | 6 | 7 | 76.9 | 33.0 | 37.0 | 37.0 | 7 | 15 | 96.5 | 7 | 15 | 46.0 | 5 | 6 | 6 | 6.5 | 70.0 | 141 | 153 | 165 | 7 | 6 | 71.5 | 5 | 11 | 5 | 8.5 | 12 |
| 6 FT | 13 | 14 | 10 | 10 | 6 | 7 | 6 | 7 | 65.3 | 33.0 | 37.0 | 37.0 | 7 | 13 | 79.5 | 7 | 13 | 44.0 | 6 | 8 | 6 | 6.5 | 64.5 | 142 | 154 | 166 | 7 | 6 | 71.0 | 5 | 12 | 5 | 8 | 12 |
| 8 FT | 14 | 16 | 10 | 10 | 6 | 7 | 6 | 6.5 | 60.3 | 34.0 | 34.0 | 38.0 | 7 | 13 | 75.0 | 7 | 13 | 43.0 | 6 | 7 | 6 | 7 | 60.6 | 144 | 156 | 168 | 7 | 6 | 70.5 | 5 | 12 | 5 | 8 | 0 |
| 10 FT | 16 | 17 | 10 | 10 | 6 | 7 | 6 | 6.5 | 63.1 | 36.0 | 40.0 | 40.0 | 7 | 13 | 81.5 | 7 | 13 | 51.0 | 6 | 7 | 6 | 6.5 | 57.8 | 145 | 157 | 169 | 7 | 6 | 70.0 | 5 | 12 | 5 | 8 | 0 |
| 12 FT | 17 | 19 | 11 | 10 | 6 | 7 | 6 | 6.5 | 62.3 | 37.0 | 37.0 | 41.0 | 7 | 12 | 80.0 | 7 | 12 | 50.5 | 6 | 6 | 6 | 7.5 | 56.5 | 147 | 159 | 171 | 7 | 6 | 70.0 | 5 | 12 | 5 | 7.5 | 0 |
| 14 FT | 19 | 21 | 12 | 10 | 6 | 6.5 | 6 | 7 | 61.5 | 39.0 | 39.0 | 43.0 | 7 | 12 | 78.5 | 7 | 12 | 50.5 | 7 | 8 | 6 | 8 | 55.8 | 149 | 161 | 173 | 7 | 6 | 70.0 | 5 | 12 | 5 | 7 | 0 |
| 16 FT | 20 | 22 | 12 | 10 | 6 | 6.5 | 6 | 6.5 | 60.3 | 40.0 | 40.0 | 44.0 | 7 | 12 | 78.0 | 7 | 12 | 50.0 | 7 | 7.5 | 6 | 7 | 54.6 | 150 | 162 | 174 | 7 | 6 | 70.0 | 5 | 12 | 5 | 7 | 0 |
| 18 FT | 22 | 24 | 12 | 10 | 6 | 6 | 6 | 6 | 59.3 | 42.0 | 46.0 | 46.0 | 7 | 12 | 77.0 | 7 | 12 | 50.0 | 7 | 7 | 6 | 6.5 | 54.0 | 152 | 164 | 176 | 7 | 6 | 69.5 | 5 | 12 | 5 | 7 | 0 |
| 20 FT | 23 | 25 | 13 | 10 | 7 | 7.5 | 6 | 6 | 59.1 | 43.0 | 43.0 | 47.0 | 8 | 15 | 84.5 | 8 | 15 | 57.5 | 7 | 6.5 | 6 | 7 | 53.6 | 153 | 165 | 177 | 8 | 7 | 75.5 | 5 | 12 | 5 | 6.5 | 0 |
| 22 FT | 25 | 27 | 13 | 10 | 7 | 7 | 6 | 6 | 58.4 | 45.0 | 45.0 | 49.0 | 8 | 15 | 83.5 | 8 | 15 | 57.5 | 7 | 6.5 | 6 | 7 | 53.1 | 155 | 167 | 179 | 8 | 7 | 75.5 | 5 | 12 | 5 | 6.5 | 0 |
| 24 FT | 27 | 29 | 14 | 10 | 7 | 6.5 | 6 | 6 | 58.6 | 51.0 | 51.0 | 51.0 | 8 | 15 | 82.5 | 8 | 15 | 57.0 | 7 | 6.5 | 6 | 7.5 | 53.3 | 157 | 169 | 181 | 8 | 7 | 75.5 | 5 | 12 | 5 | 6 | 0 |
| 26 FT | 28 | 31 | 14 | 10 | 7 | 6.5 | 6 | 6 | 58.3 | 52.0 | 52.0 | 52.0 | 8 | 14 | 82.0 | 8 | 14 | 57.0 | 7 | 6.5 | 6 | 7.5 | 52.9 | 159 | 171 | 183 | 8 | 7 | 75.5 | 5 | 12 | 5 | 6 | 0 |
| 28 FT | 30 | 33 | 15 | 10 | 7 | 6 | 6 | 6 | 58.8 | 54.0 | 54.0 | 54.0 | 8 | 15 | 80.5 | 8 | 15 | 56.5 | 7 | 6.5 | 6 | 7 | 53.3 | 161 | 173 | 185 | 8 | 6.5 | 75.5 | 5 | 12 | 6 | 8 | 0 |
| 30 FT | 31 | 34 | 15 | 10 | 8 | 7.5 | 7 | 8 | 63.5 | 55.0 | 55.0 | 55.0 | 8 | 15 | 79.5 | 8 | 15 | 56.0 | 7 | 6 | 6 | 7 | 53.1 | 162 | 174 | 186 | 8 | 6.5 | 75.5 | 5 | 12 | 6 | 8 | 0 |
| 32 FT | 32 | 35 | 15 | 10 | 8 | 7.5 | 7 | 7 | 63.3 | 56.0 | 56.0 | 56.0 | 8 | 14 | 79.0 | 8 | 14 | 55.5 | 7 | 6 | 6 | 6.5 | 53.0 | 163 | 175 | 187 | 8 | 6.5 | 75.5 | 5 | 12 | 6 | 8 | 0 |
| 34 FT | 33 | 37 | 16 | 10 | 8 | 7 | 7 | 7.5 | 64.0 | 57.0 | 57.0 | 57.0 | 8 | 14 | 77.5 | 8 | 14 | 55.0 | 7 | 6 | 6 | 6.5 | 53.5 | 165 | 177 | 189 | 8 | 6 | 75.5 | 5 | 12 | 6 | 8 | 0 |
| 36 FT | 34 | 38 | 16 | 10 | 8 | 7 | 7 | 7.5 | 62.4 | 58.0 | 58.0 | 58.0 | 8 | 14 | 76.5 | 8 | 14 | 54.0 | 7 | 6 | 6 | 6 | 51.9 | 166 | 178 | 190 | 8 | 6 | 75.5 | 5 | 12 | 6 | 8 | 0 |
| 38 FT | 35 | 40 | 16 | 10 | 8 | 6.5 | 7 | 7 | 62.4 | 59.0 | 59.0 | 59.0 | 8 | 13 | 75.0 | 8 | 13 | 53.5 | 7 | 6 | 6 | 6 | 52.0 | 168 | 180 | 192 | 9 | 7 | 81.5 | 5 | 12 | 6 | 8 | 0 |
| 40 FT | 36 | 41 | 17 | 10 | 8 | 6 | 7 | 7.5 | 63.1 | 60.0 | 60.0 | 66.0 | 8 | 12 | 74.5 | 8 | 12 | 52.5 | 8 | 7.5 | 7 | 8 | 55.5 | 169 | 181 | 193 | 9 | 7 | 81.5 | 5 | 12 | 6 | 7.5 | 0 |
| 42 FT | 38 | 42 | 17 | 10 | 8 | 6 | 7 | 7.5 | 62.9 | 62.0 | 62.0 | 68.0 | 8 | 12 | 73.5 | 8 | 12 | 50.0 | 8 | 7.5 | 7 | 7.5 | 55.8 | 170 | 182 | 194 | 9 | 7 | 81.5 | 5 | 12 | 6 | 7.5 | 0 |
| 44 FT | 39 | 43 | 18 | 10 | 8 | 6 | 7 | 7.5 | 63.8 | 63.0 | 63.0 | 69.0 | 8 | 12 | 73.0 | 8 | 12 | 49.0 | 8 | 7 | 7 | 7.5 | 56.1 | 171 | 183 | 195 | 9 | 7 | 81.5 | 5 | 12 | 6 | 7 | 0 |
| 46 FT | 40 | 44 | 18 | 10 | 8 | 6 | 7 | 7.5 | 63.6 | 70.0 | 70.0 | 70.0 | 8 | 12 | 72.0 | 8 | 12 | 48.5 | 8 | 6.5 | 7 | 7 | 56.3 | 172 | 184 | 196 | 9 | 6.5 | 81.5 | 5 | 12 | 6 | 7 | 0 |
| 48 FT | 40 | 46 | 19 | 10 | 8 | 6 | 7 | 7 | 64.8 | 70.0 | 70.0 | 70.0 | 8 | 12 | 72.0 | 8 | 12 | 49.0 | 8 | 7 | 7 | 7 | 56.6 | 174 | 186 | 198 | 9 | 6.5 | 81.5 | 5 | 12 | 6 | 6.5 | 0 |
| 50 FT | 41 | 47 | 19 | 10 | 9 | 7.5 | 7 | 6.5 | 64.6 | 71.0 | 71.0 | 71.0 | 8 | 12 | 71.5 | 8 | 12 | 48.5 | 8 | 7 | 7 | 6.5 | 56.9 | 175 | 187 | 199 | 9 | 6 | 81.5 | 5 | 12 | 6 | 6.5 | 0 |

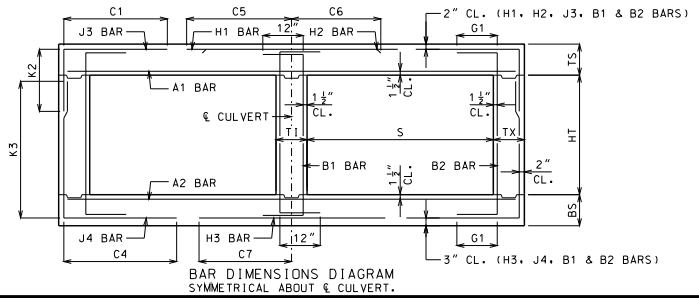


BAR DIMENSIONS DIAGRAM
SYMMETRICAL ABOUT ℄ CULVERT.

GENERAL NOTES:

IF DESIGN FILL IS BETWEEN TABULATED DESIGN FILLS, USE THE NEXT GREATER TABULATED DESIGN FILL, EXCEPT FOR DESIGN FILLS BETWEEN 2 FEET AND 4 FEET. FOR DESIGN FILLS BETWEEN 2 FEET AND 4 FEET USE THE GREATER MEMBER THICKNESS, AREA OF REINFORCEMENT AND BAR DIMENSIONS FROM THE 2 FEET AND 4 FEET TABULATED DESIGN FILLS. AREA OF REINFORCEMENT EQUALS BAR AREA PER FOOT SPACING.

SPECIAL DESIGNS ARE REQUIRED WHEN THE DESIGN FILL IS LESS THAN 1 FOOT OR GREATER THAN 50 FEET.

DIMENSIONS ARE IN INCHES UNLESS OTHERWISE SPECIFIED.

DESIGN FILLS ARE MEASURED FROM THE TOP OF TOP SLAB TO THE TOP OF EARTH FILL OR ROADWAY.

CULVERTS MEET STRENGTH AND SERVICEABILITY REQUIREMENTS FOR THE DESIGN VEHICULAR LIVE LOAD HL-93 MINUS THE LANE LOAD.


MISSOURI HIGHWAYS AND TRANSPORTATION COMMISSION
105 WEST CAPITOL
JEFFERSON CITY, MO 65102
1-888-ASK-MODOT (1-888-275-6636)


STATE OF MISSOURI
DENNIS W. HECKMAN
NUMBER PE-27141
PROFESSIONAL ENGINEER
THIS SHEET HAS BEEN SIGNED, SEALED AND DATED ELECTRONICALLY.

# CONCRETE DOUBLE BOX CULVERT

MEMBER THICKNESS
BAR SIZE, SPACING & DIMENSIONS

SPAN (S): 16 FEET
HEIGHT (HT): 8 THRU 13 FEET

DATE EFFECTIVE: 10/01/2011
DATE PREPARED: 9/8/2011

703.47

SHEET NO. 26 OF 27

IF A SEAL IS PRESENT ON THIS SHEET IT HAS BEEN ELECTRONICALLY SEALED AND DATED.

SPAN (S) = 16 FT  HEIGHT (HT) = 14 FT OR 15 FT OR 16 FT

| DESIGN FILL | MEMBER THICKNESS | | | | TOP SLAB BARS | | | | | | | | | | | | | BOTTOM SLAB BARS | | | | | | | | | | | | WALL BARS | | | | |
|---|---|---|---|---|---|---|---|---|---|---|---|---|---|---|---|---|---|---|---|---|---|---|---|---|---|---|---|---|---|---|---|---|---|
| | | | | | A1 BARS | | J3 BARS | | | K2 | | | H1 BARS | | | H2 BARS | | A2 BARS | | J4 BARS | | | K3 | | | H3 BARS | | | B1 BARS | | B2 BARS | | |
| | TS | BS | TX | TI | SIZE | SPA. | SIZE | SPA. | C1 | HT=14' | HT=15' | HT=16' | SIZE | SPA. | C5 | SIZE | SPA. | C6 | SIZE | SPA. | SIZE | SPA. | C4 | HT=14' | HT=15' | HT=16' | SIZE | SPA. | C7 | SIZE | SPA. | SIZE | SPA. | G1 |
| 1 FT | 15 | 13 | 12 | 13 | 6 | 7.5 | 6 | 8 | 82.9 | 35.0 | 35.0 | 39.0 | 6 | 15 | 160.5 | 6 | 15 | 53.0 | 5 | 6 | 6 | 7 | 101.1 | 177 | 189 | 201 | 6 | 6 | 70.5 | 5 | 10 | 5 | 7 | 12 |
| 2 FT | 17 | 14 | 12 | 13 | 6 | 7.5 | 6 | 8.5 | 82.9 | 37.0 | 37.0 | 41.0 | 6 | 14 | 160.5 | 6 | 14 | 50.0 | 6 | 8 | 6 | 7 | 95.1 | 178 | 190 | 202 | 7 | 7 | 73.0 | 5 | 12 | 5 | 7 | 12 |
| 4 FT | 13 | 13 | 12 | 13 | 6 | 7 | 6 | 7 | 99.8 | 37.0 | 37.0 | 37.0 | 7 | 15 | 94.0 | 7 | 15 | 46.0 | 6 | 8.5 | 6 | 6 | 86.1 | 177 | 189 | 201 | 7 | 6 | 72.0 | 5 | 11 | 5 | 7 | 12 |
| 6 FT | 13 | 15 | 12 | 13 | 6 | 7 | 6 | 6.5 | 82.6 | 37.0 | 37.0 | 37.0 | 7 | 14 | 77.5 | 7 | 14 | 44.5 | 6 | 7.5 | 6 | 6.5 | 82.5 | 179 | 191 | 203 | 7 | 6 | 71.5 | 5 | 12 | 5 | 7 | 12 |
| 8 FT | 14 | 16 | 13 | 13 | 6 | 7.5 | 6 | 6.5 | 76.6 | 38.0 | 38.0 | 38.0 | 7 | 13 | 74.5 | 7 | 13 | 44.0 | 6 | 7 | 6 | 6.5 | 77.6 | 180 | 192 | 204 | 7 | 6 | 71.0 | 5 | 12 | 5 | 6.5 | 0 |
| 10 FT | 15 | 18 | 13 | 13 | 6 | 6.5 | 6 | 6 | 79.5 | 39.0 | 39.0 | 39.0 | 7 | 13 | 80.5 | 7 | 13 | 51.5 | 6 | 6.5 | 6 | 6 | 75.6 | 182 | 194 | 206 | 7 | 6 | 71.0 | 5 | 12 | 5 | 6.5 | 0 |
| 12 FT | 17 | 19 | 14 | 13 | 6 | 7 | 6 | 6 | 77.8 | 41.0 | 41.0 | 41.0 | 7 | 13 | 79.5 | 7 | 13 | 51.5 | 6 | 6 | 6 | 6 | 73.1 | 183 | 195 | 207 | 7 | 6 | 70.5 | 5 | 12 | 5 | 6 | 0 |
| 14 FT | 18 | 21 | 15 | 13 | 6 | 7 | 6 | 6 | 76.3 | 42.0 | 42.0 | 42.0 | 7 | 12 | 78.5 | 7 | 12 | 51.0 | 7 | 8 | 6 | 6 | 71.8 | 185 | 197 | 209 | 7 | 6 | 70.5 | 5 | 12 | 6 | 8 | 0 |
| 16 FT | 20 | 22 | 15 | 13 | 6 | 6.5 | 7 | 7.5 | 79.9 | 44.0 | 44.0 | 44.0 | 7 | 12 | 78.0 | 7 | 12 | 51.0 | 7 | 7.5 | 6 | 6 | 70.3 | 186 | 198 | 210 | 7 | 6 | 70.0 | 5 | 12 | 6 | 8 | 0 |
| 18 FT | 22 | 24 | 15 | 13 | 6 | 6 | 7 | 7 | 78.8 | 46.0 | 46.0 | 52.0 | 7 | 12 | 77.5 | 7 | 12 | 51.0 | 7 | 7 | 7 | 7 | 72.4 | 188 | 200 | 212 | 7 | 6 | 70.0 | 5 | 12 | 6 | 8 | 0 |
| 20 FT | 23 | 25 | 16 | 13 | 7 | 7.5 | 7 | 7 | 78.0 | 47.0 | 47.0 | 53.0 | 8 | 15 | 85.0 | 8 | 15 | 58.5 | 7 | 6 | 7 | 7.5 | 71.4 | 189 | 201 | 213 | 8 | 7 | 76.0 | 5 | 12 | 6 | 8 | 0 |
| 22 FT | 25 | 27 | 17 | 13 | 7 | 7 | 7 | 7.5 | 77.8 | 49.0 | 49.0 | 49.0 | 7 | 12 | 76.0 | 7 | 12 | 50.5 | 7 | 6 | 6 | 6 | 68.0 | 191 | 203 | 215 | 8 | 7 | 76.0 | 5 | 12 | 6 | 7.5 | 0 |
| 24 FT | 26 | 29 | 17 | 13 | 7 | 7 | 7 | 7 | 76.9 | 50.0 | 50.0 | 56.0 | 8 | 15 | 83.5 | 8 | 15 | 58.5 | 7 | 6.5 | 7 | 7.5 | 70.4 | 193 | 205 | 217 | 8 | 7 | 76.0 | 5 | 12 | 6 | 7.5 | 0 |
| 26 FT | 28 | 31 | 18 | 13 | 7 | 6.5 | 7 | 7 | 76.9 | 52.0 | 52.0 | 52.0 | 8 | 15 | 82.5 | 8 | 15 | 58.0 | 7 | 6.5 | 6 | 6 | 67.1 | 195 | 207 | 219 | 8 | 7 | 76.5 | 5 | 12 | 6 | 7 | 0 |
| 28 FT | 29 | 33 | 19 | 13 | 7 | 6 | 7 | 7 | 77.1 | 53.0 | 53.0 | 53.0 | 8 | 15 | 82.0 | 8 | 15 | 58.0 | 7 | 6 | 6 | 6 | 67.1 | 197 | 209 | 221 | 8 | 6.5 | 76.5 | 5 | 12 | 6 | 6.5 | 0 |
| 30 FT | 31 | 34 | 19 | 13 | 8 | 7.5 | 7 | 6.5 | 76.8 | 55.0 | 55.0 | 55.0 | 8 | 15 | 80.5 | 8 | 15 | 57.0 | 7 | 6 | 6 | 6 | 67.0 | 198 | 210 | 222 | 8 | 6.5 | 76.0 | 5 | 12 | 6 | 6.5 | 0 |
| 32 FT | 32 | 36 | 20 | 13 | 8 | 7.5 | 7 | 6.5 | 77.3 | 56.0 | 56.0 | 56.0 | 8 | 14 | 79.5 | 8 | 14 | 56.5 | 7 | 6 | 6 | 6 | 67.3 | 200 | 212 | 224 | 8 | 6 | 76.5 | 5 | 12 | 6 | 6.5 | 0 |
| 34 FT | 33 | 37 | 21 | 13 | 8 | 7 | 7 | 6.5 | 77.6 | 57.0 | 57.0 | 57.0 | 8 | 14 | 78.5 | 8 | 14 | 55.5 | 7 | 6 | 6 | 6 | 67.3 | 201 | 213 | 225 | 8 | 6 | 76.5 | 5 | 12 | 6 | 6 | 0 |
| 36 FT | 34 | 38 | 21 | 13 | 8 | 7 | 7 | 6.5 | 75.5 | 58.0 | 58.0 | 58.0 | 8 | 14 | 77.5 | 8 | 14 | 55.0 | 8 | 7 | 6 | 6 | 64.9 | 202 | 214 | 226 | 8 | 6 | 76.5 | 5 | 12 | 6 | 6 | 0 |
| 38 FT | 35 | 40 | 21 | 13 | 8 | 6.5 | 7 | 6 | 75.5 | 59.0 | 59.0 | 59.0 | 8 | 13 | 76.5 | 8 | 13 | 54.0 | 8 | 7.5 | 6 | 6 | 65.1 | 204 | 216 | 228 | 9 | 7 | 82.0 | 5 | 12 | 6 | 6 | 0 |
| 40 FT | 36 | 41 | 22 | 13 | 8 | 6.5 | 7 | 6 | 76.1 | 66.0 | 66.0 | 66.0 | 8 | 13 | 75.5 | 8 | 13 | 53.5 | 8 | 7.5 | 7 | 7.5 | 68.5 | 205 | 217 | 229 | 9 | 7 | 82.0 | 5 | 12 | 6 | 6 | 0 |
| 42 FT | 37 | 42 | 23 | 13 | 8 | 6.5 | 7 | 6.5 | 76.9 | 67.0 | 67.0 | 67.0 | 8 | 12 | 75.0 | 8 | 12 | 52.5 | 8 | 6.5 | 7 | 7.5 | 68.8 | 206 | 218 | 230 | 9 | 7 | 82.5 | 5 | 12 | 7 | 7.5 | 0 |
| 44 FT | 38 | 44 | 24 | 13 | 8 | 6 | 7 | 6 | 77.6 | 68.0 | 68.0 | 68.0 | 8 | 12 | 74.5 | 8 | 12 | 52.0 | 8 | 7 | 7 | 7 | 69.4 | 208 | 220 | 232 | 9 | 6.5 | 82.5 | 5 | 12 | 7 | 7.5 | 0 |
| 46 FT | 39 | 45 | 25 | 13 | 8 | 6 | 7 | 6 | 78.4 | 69.0 | 69.0 | 69.0 | 8 | 12 | 74.0 | 8 | 12 | 51.0 | 8 | 7 | 7 | 7 | 69.8 | 209 | 221 | 233 | 9 | 6.5 | 82.5 | 5 | 12 | 7 | 7.5 | 0 |
| 48 FT | 40 | 46 | 26 | 13 | 8 | 6 | 7 | 6 | 79.1 | 70.0 | 70.0 | 70.0 | 8 | 12 | 73.5 | 8 | 12 | 50.0 | 8 | 6.5 | 7 | 7 | 70.1 | 210 | 222 | 234 | 9 | 6.5 | 82.5 | 5 | 12 | 7 | 8 | 0 |
| 50 FT | 41 | 47 | 27 | 13 | 9 | 7.5 | 7 | 6 | 79.9 | 71.0 | 71.0 | 71.0 | 8 | 12 | 73.0 | 8 | 12 | 49.5 | 8 | 6 | 7 | 6.5 | 70.5 | 211 | 223 | 235 | 9 | 6 | 82.5 | 5 | 12 | 7 | 8 | 0 |

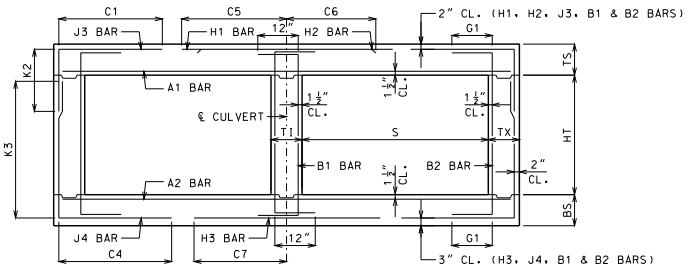


BAR DIMENSIONS DIAGRAM
SYMMETRICAL ABOUT ℄ CULVERT.

GENERAL NOTES:

IF DESIGN FILL IS BETWEEN TABULATED DESIGN FILLS, USE THE NEXT GREATER TABULATED DESIGN FILL, EXCEPT FOR DESIGN FILLS BETWEEN 2 FEET AND 4 FEET. FOR DESIGN FILLS BETWEEN 2 FEET AND 4 FEET USE THE GREATER MEMBER THICKNESS, AREA OF REINFORCEMENT AND BAR DIMENSIONS FROM THE 2 FEET AND 4 FEET TABULATED DESIGN FILLS. AREA OF REINFORCEMENT EQUALS BAR AREA PER FOOT SPACING.

SPECIAL DESIGNS ARE REQUIRED WHEN THE DESIGN FILL IS LESS THAN 1 FOOT OR GREATER THAN 50 FEET.

DIMENSIONS ARE IN INCHES UNLESS OTHERWISE SPECIFIED.

DESIGN FILLS ARE MEASURED FROM THE TOP OF TOP SLAB TO THE TOP OF EARTH FILL OR ROADWAY.

CULVERTS MEET STRENGTH AND SERVICEABILITY REQUIREMENTS FOR THE DESIGN VEHICULAR LIVE LOAD HL-93 MINUS THE LANE LOAD.


MISSOURI HIGHWAYS AND TRANSPORTATION COMMISSION
105 WEST CAPITOL
JEFFERSON CITY, MO 65102
1-888-ASK-MODOT (1-888-275-6636)


STATE OF MISSOURI
DENNIS W. HECKMANN
NUMBER PE-27141
PROFESSIONAL ENGINEER
THIS SHEET HAS BEEN SIGNED, SEALED AND DATED ELECTRONICALLY.

# CONCRETE DOUBLE BOX CULVERT

MEMBER THICKNESS
BAR SIZE, SPACING & DIMENSIONS

SPAN (S): 16 FEET
HEIGHT (HT): 14 THRU 16 FEET

DATE EFFECTIVE: 10/01/2011
DATE PREPARED: 9/8/2011

703.47

SHEET NO.
27 OF 27

IF A SEAL IS PRESENT ON THIS SHEET IT HAS BEEN ELECTRONICALLY SEALED AND DATED.

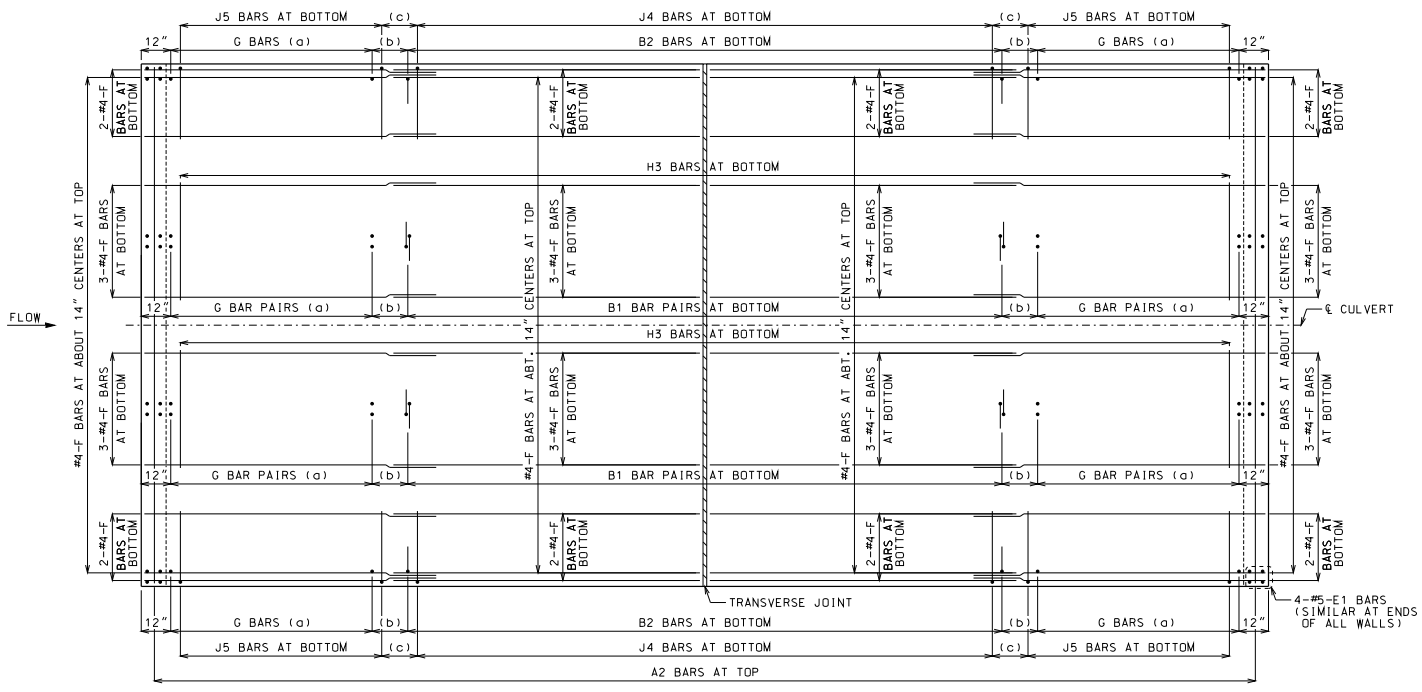


PLAN OF BOTTOM SLAB

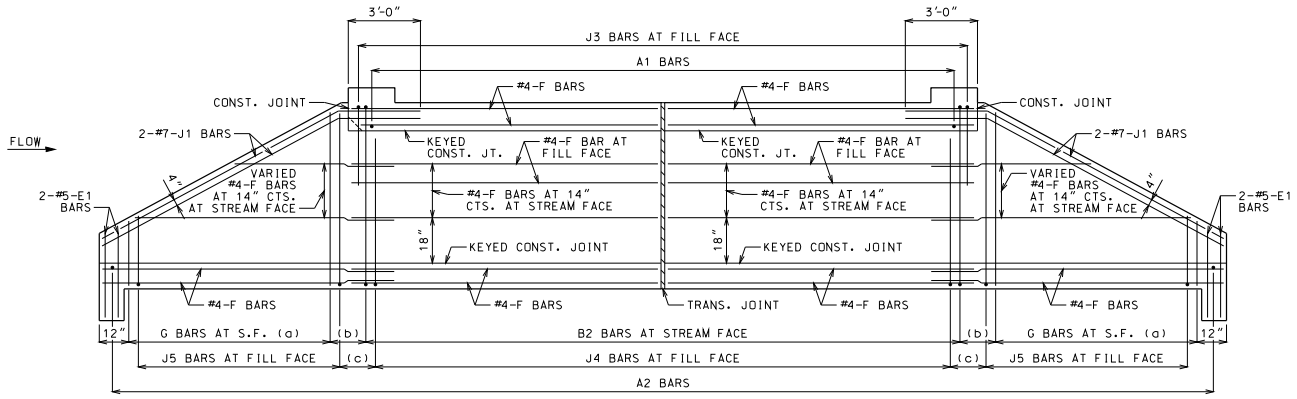


ELEVATION OF EXTERIOR WALL

J1 BARS MAY BE BENT IN FIELD OR SHOP.

## LAYING OUT TRANVERSE JOINTS

UNLESS SHOWN ON BRIDGE PLANS

USE A TRANSVERSE JOINT WHEN BARREL LENGTH IS OVER 80 FEET. USE ADDITIONAL JOINTS TO LIMIT CUT SECTION LENGTH AND END SECTION BARREL LENGTH MEASURED ALONG CENTERLINE OF CULVERT TO 50 FEET.

MINIMUM END SECTION LENGTH SHALL BE 3 FEET MEASURED ALONG THE SHORTEST WALL FROM THE INSIDE FACE OF HEADWALL TO THE TRANSVERSE JOINT.

TO AVOID LOCATING TRANSVERSE JOINTS UNDER A TRAVELED WAY WITH DESIGN FILLS 2 FEET OR LESS THE FOLLOWING SHALL APPLY:

BARREL LENGTH UP TO 90 FEET WITHOUT A TRANSVERSE JOINT

CUT SECTION LENGTHS UP TO 60 FEET

WHEN BARREL AND CUT SECTION LENGTH RESTRICTIONS REQUIRE TRANSVERSE JOINTS TO BE LOCATED UNDER A TRAVELED WAY WITH DESIGN FILLS 2 FEET OR LESS, THE JOINTS SHALL BE LOCATED TO MINIMIZE THE LENGTH OF JOINT UNDER THE TRAVELED WAY.

TRAVELED WAY IS THE ROADWAY WIDTH MINUS SHOULDER WIDTHS.

FOR CUT SECTION DETAILS, SEE 703.86.

## GENERAL NOTES:

FOR SECTIONS THRU BARREL, WINGS AND HEADWALLS, SEE SHEET 3 OF 3. FOR BAR SIZES, SPACING AND DIMENSIONS OF ALL REINFORCEMENT EXCEPT J5 BARS, SEE 703.87. FOR J5 BARS, SEE 703.37.

CONSTRUCTION JOINT KEY NOT SHOWN FOR CLARITY IN PLAN AND ELEVATION, SEE SHEET 3 OF 3 FOR DETAILS.

DRAWING NOT TO SCALE. FOLLOW DIMENSIONS.

MINIMUM CLEARANCE TO REINFORCING STEEL SHALL BE 1½".

LAP LONGITUDINAL BARS A MINIMUM OF 23" AT SPLICES.

BEVELED HEADWALL SHALL BE LOCATED AT UPSTREAM END.

(a) SAME SIZE AND SPACING AS ADJACENT B BARS

(b) VARIES, 12" MAXIMUM

(c) J4 BAR SPACING

MISSOURI HIGHWAYS AND TRANSPORTATION COMMISSION
105 WEST CAPITOL
JEFFERSON CITY, MO 65102
1-888-ASK-MODOT (1-888-275-6636)

STATE OF MISSOURI
DENNIS W. HECKMAN
NUMBER PE-27141
PROFESSIONAL ENGINEER
THIS SHEET HAS BEEN SIGNED, SEALED AND DATED ELECTRONICALLY.

# CONCRETE TRIPLE BOX CULVERT

SKEW: SQUARE
WINGS: STRAIGHT

REINFORCEMENT

| DATE EFFECTIVE: | 12/01/2011 | 703.80H | SHEET NO. 1 OF 3 |
|---|---|---|---|
| DATE PREPARED: | 9/29/2011 | | |

IF A SEAL IS PRESENT ON THIS SHEET IT HAS BEEN ELECTRONICALLY SEALED AND DATED.

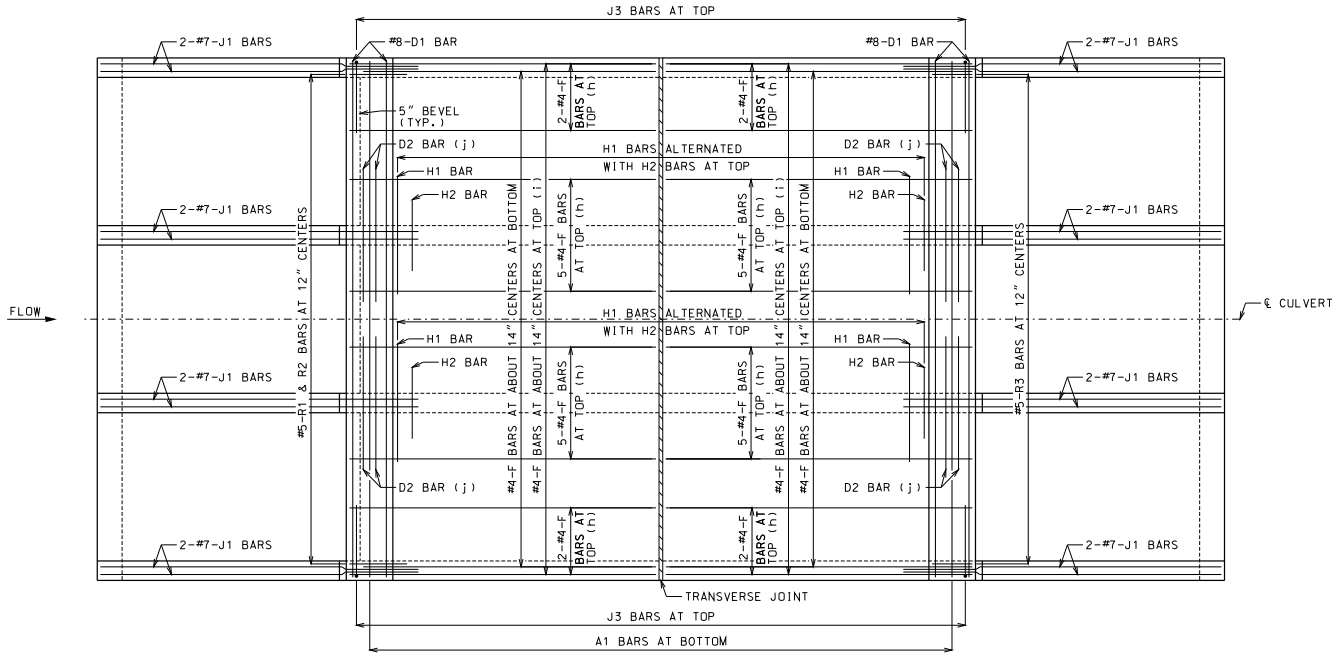


PLAN OF TOP SLAB

B BARS IN WALLS ARE NOT SHOWN FOR CLARITY.
FOR PLACEMENT, SEE SHEET 1 OF 3.

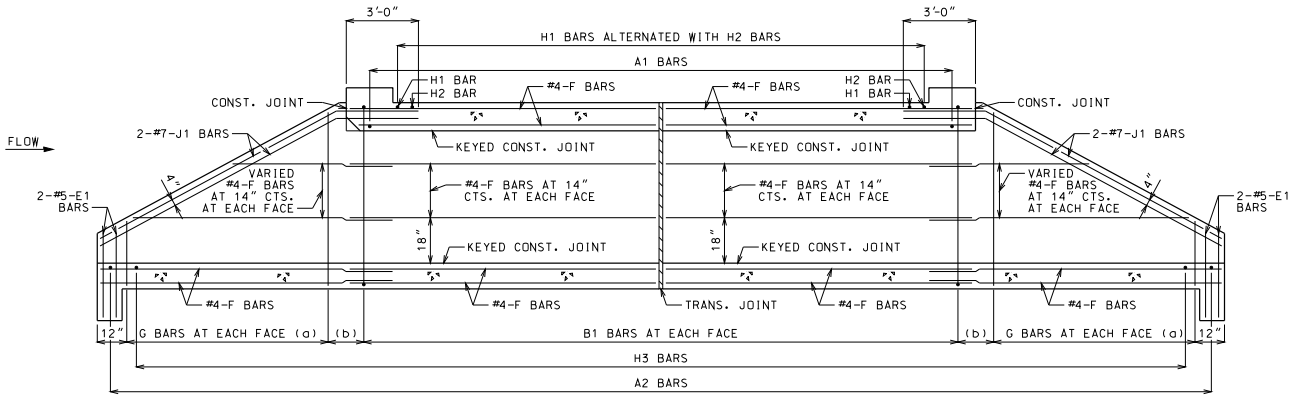


SECTION NEAR INTERIOR WALL

J1 BARS MAY BE BENT IN FIELD OR SHOP.

## GENERAL NOTES:

FOR SECTIONS THRU BARREL, WINGS AND HEADWALLS, SEE SHEET 3 OF 3. FOR BAR SIZES, SPACING AND DIMENSIONS OF ALL REINFORCEMENT EXCEPT J5 BARS, SEE 703.87. FOR J5 BARS, SEE 703.37.

CONSTRUCTION JOINT KEY NOT SHOWN FOR CLARITY IN PLAN AND SECTION, SEE SHEET 3 OF 3 FOR DETAILS.

DRAWING NOT TO SCALE. FOLLOW DIMENSIONS.

MINIMUM CLEARANCE TO REINFORCING STEEL SHALL BE 1½".

LAP LONGITUDINAL BARS A MINIMUM OF 23" AT SPLICES.

BEVELED HEADWALL SHALL BE LOCATED AT UPSTREAM END.

(a) SAME SIZE AND SPACING AS ADJACENT B BARS

(b) VARIES, 12" MAXIMUM

(c) NOT SPECIFIED ON THIS SHEET

(d) NOT SPECIFIED ON THIS SHEET

(e) NOT SPECIFIED ON THIS SHEET

(f) NOT SPECIFIED ON THIS SHEET

(g) NOT SPECIFIED ON THIS SHEET

(h) FOR DESIGN FILLS OVER 2'-0"

(i) FOR DESIGN FILLS 2'-0" OR LESS

(j) NOT REQUIRED FOR CLEAR SPANS ≤ 10'-0"
#8 FOR CLEAR SPAN > 10'-0"
#9 FOR CLEAR SPAN > 13'-0"

IF REQUIRED, THE MINIMUM LENGTH EACH SIDE OF ℄ WALL SHALL BE THE GREATER OF 48 BAR DIAMETERS OR ¼ CLEAR SPAN. THE CLEAR SPAN IS PARALLEL TO LONG DIRECTION OF HEADWALL.

IF A SEAL IS PRESENT ON THIS SHEET IT HAS BEEN ELECTRONICALLY SEALED AND DATED.

MISSOURI HIGHWAYS AND TRANSPORTATION COMMISSION
105 WEST CAPITOL
JEFFERSON CITY, MO 65102
1-888-ASK-MODOT (1-888-275-6636)

STATE OF MISSOURI
DENNIS W. HECKMAN
NUMBER PE-27141
PROFESSIONAL ENGINEER
THIS SHEET HAS BEEN SIGNED, SEALED AND DATED ELECTRONICALLY.

# CONCRETE TRIPLE BOX CULVERT

SKEW: SQUARE
WINGS: STRAIGHT

REINFORCEMENT

| DATE EFFECTIVE: | 12/01/2011 | 703.80H | SHEET NO. 2 OF 3 |
|---|---|---|---|
| DATE PREPARED: | 9/29/2011 | | |

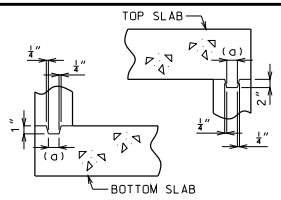


KEYED CONSTRUCTION JOINT

(a) APPROXIMATELY ONE-THIRD OF WALL THICKNESS

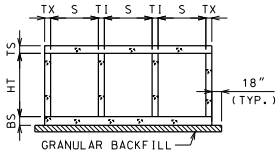


GRANULAR BACKFILL LIMITS AND MEMBER DIMENSIONS

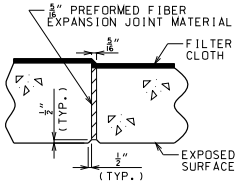


TRANSVERSE JOINT THRU BARREL

PREFORMED FIBER EXPANSION JOINT MATERIAL SHALL BE SECURELY STITCHED TO ONE FACE OF THE CONCRETE WITH NO. 10 GAGE COPPER WIRE OR NO. 12 GAGE SOFT DRAWN GALVANIZED STEEL WIRE.

FILTER CLOTH 3 FEET IN WIDTH AND DOUBLE THICKNESS SHALL BE CENTERED ON TRANSVERSE JOINTS IN TOP SLAB AND SIDEWALLS WITH EDGES SEALED WITH MASTIC OR TWO SIDED TAPE. FILTER CLOTH SHALL BE A SUBSURFACE DRAINAGE GEOTEXTILE IN ACCORDANCE WITH SECTION 1011 OF THE STANDARD SPECIFICATIONS FOR HIGHWAY CONSTRUCTION. COST OF FURNISHING AND INSTALLING FILTER CLOTH WILL BE CONSIDERED COMPLETELY COVERED BY THE CONTRACT UNIT PRICE FOR OTHER ITEMS.

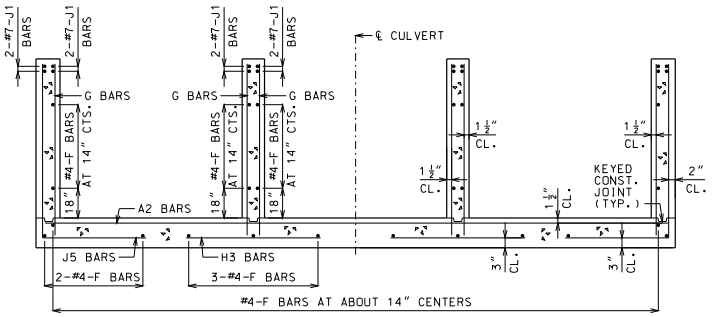


UPSTREAM AND DOWNSTREAM WINGS REINFORCEMENT

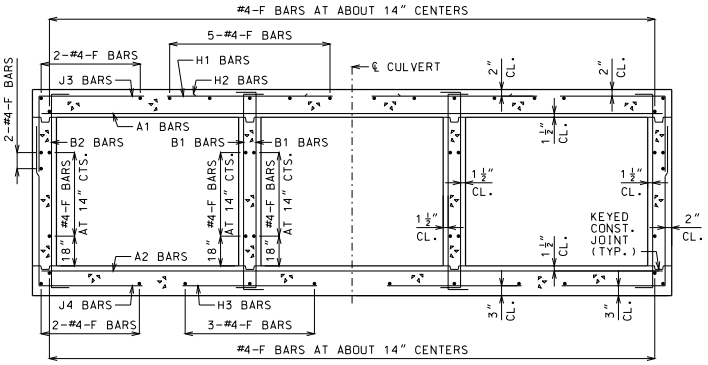


BARREL REINFORCEMENT

FOR DESIGN FILLS OVER 2'-0"

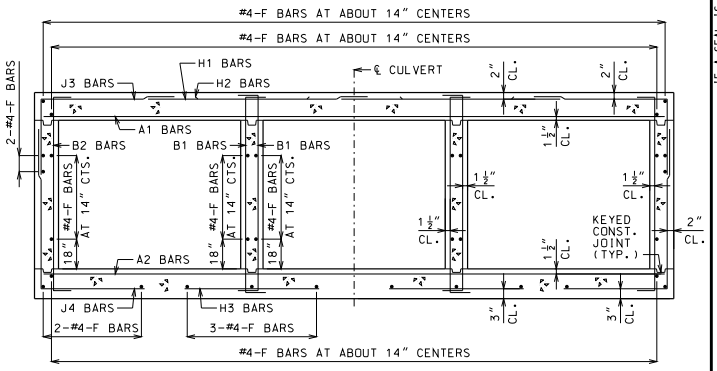


BARREL REINFORCEMENT

FOR DESIGN FILLS 2'-0" OR LESS

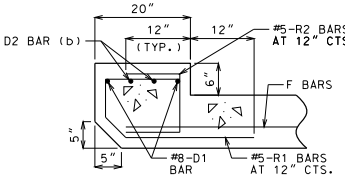


UPSTREAM HEADWALL REINFORCEMENT

NEAR INTERIOR WALL

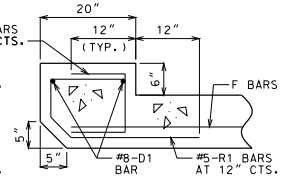


UPSTREAM HEADWALL REINFORCEMENT

NEAR MIDSPAN

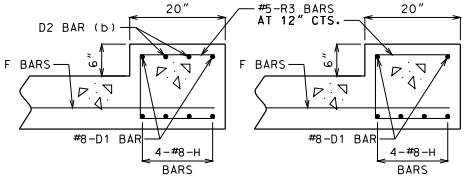


DOWNSTREAM HEADWALL REINFORCEMENT

NEAR INTERIOR WALL




DOWNSTREAM HEADWALL REINFORCEMENT

NEAR MIDSPAN

(b) NOT REQUIRED FOR CLEAR SPANS ≤ 10'-0"
#8 FOR CLEAR SPAN > 10'-0"
#9 FOR CLEAR SPAN > 13'-0"

IF D2 BARS ARE REQUIRED, THE MINIMUM LENGTH EACH SIDE OF ℄ WALL SHALL BE THE GREATER OF 48 BAR DIAMETERS OR ¼ CLEAR SPAN. THE CLEAR SPAN IS PARALLEL TO LONG DIRECTION OF HEADWALL.

GENERAL NOTES:

FOR MEMBER THICKNESS AND FOR BAR SIZES, SPACING AND DIMENSIONS OF ALL REINFORCEMENT EXCEPT J5 BARS, SEE 703.87. FOR J5 BARS, SEE 703.37.

BARREL AND WINGS SECTIONS ARE SYMMETRICAL ABOUT AND NORMAL TO ℄ CULVERT. HEADWALL SECTIONS ARE NORMAL TO LONG DIRECTION OF HEADWALL.

DRAWING NOT TO SCALE. FOLLOW DIMENSIONS.

MINIMUM CLEARANCE TO REINFORCING STEEL SHALL BE 1½".

MISSOURI HIGHWAYS AND TRANSPORTATION COMMISSION
105 WEST CAPITOL
JEFFERSON CITY, MO 65102
1-888-ASK-MODOT (1-888-275-6636)

STATE OF MISSOURI
DENNIS W. HECKMAN
NUMBER PE-27141
PROFESSIONAL ENGINEER
THIS SHEET HAS BEEN SIGNED, SEALED AND DATED ELECTRONICALLY.

# CONCRETE TRIPLE BOX CULVERT

SKEW: SQUARE
WINGS: STRAIGHT

SECTIONS

| DATE EFFECTIVE: | 12/01/2011 | 703.80H | SHEET NO. 3 OF 3 |
|---|---|---|---|
| DATE PREPARED: | 9/29/2011 | | |

IF A SEAL IS PRESENT ON THIS SHEET IT HAS BEEN ELECTRONICALLY SEALED AND DATED.

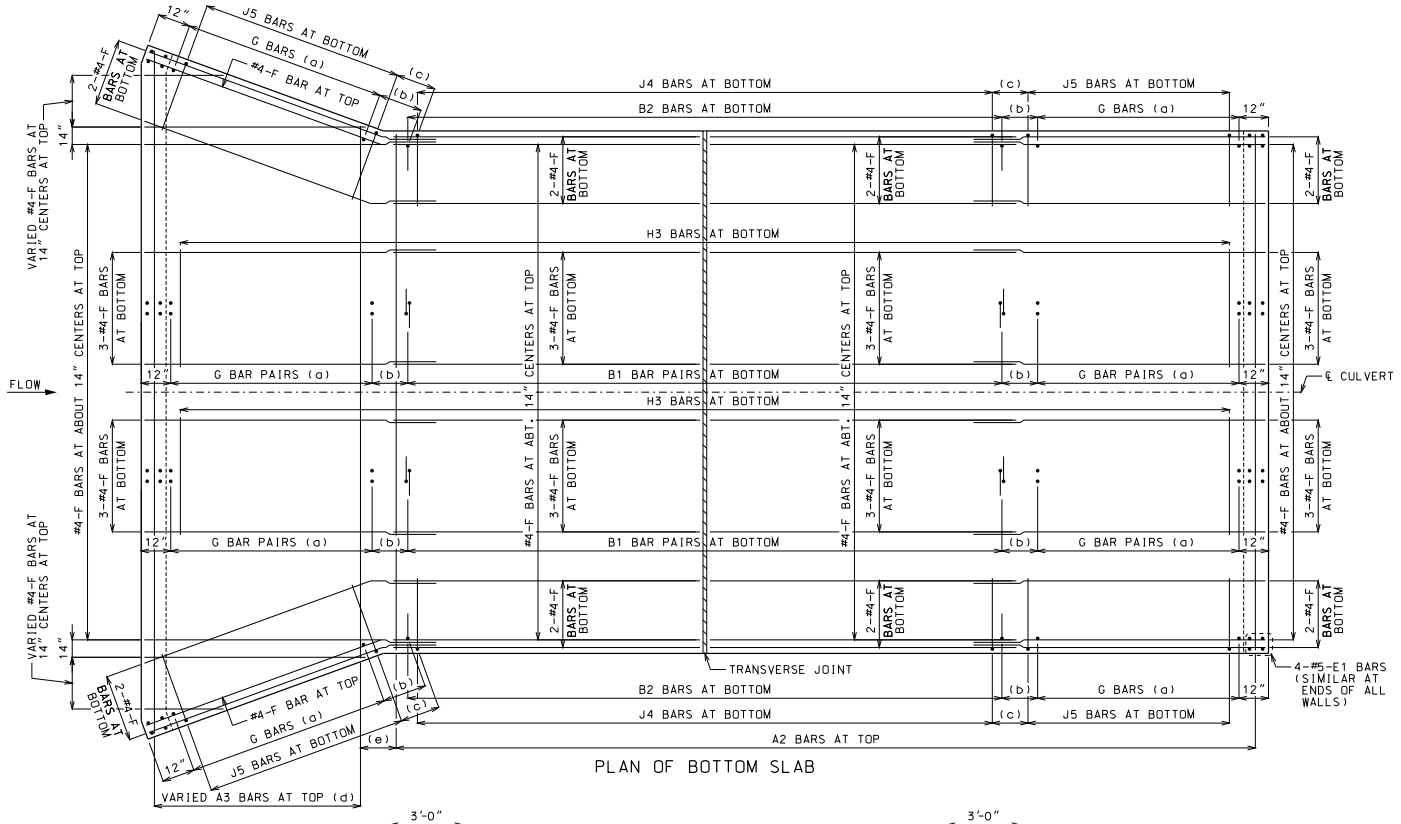


PLAN OF BOTTOM SLAB

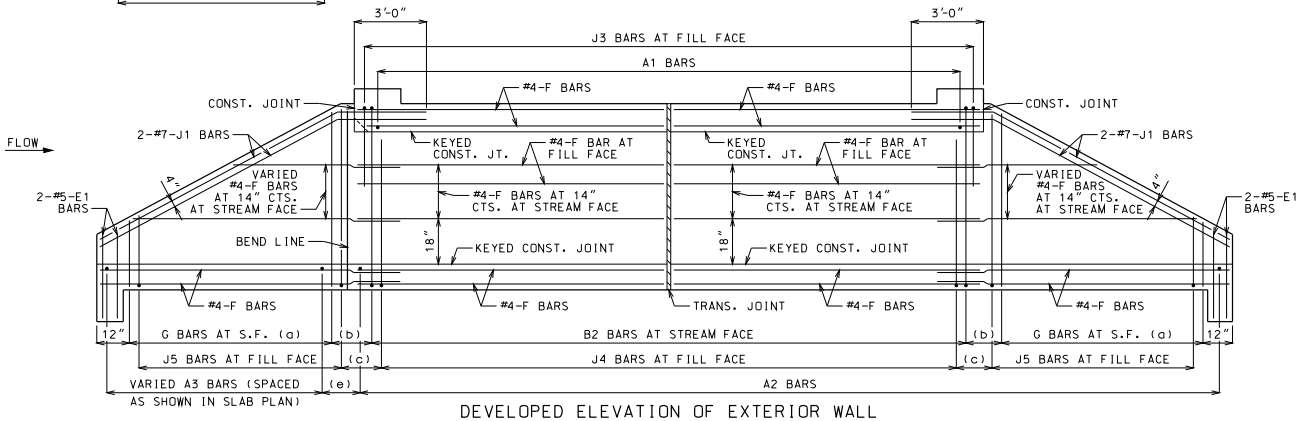


DEVELOPED ELEVATION OF EXTERIOR WALL

J1 BARS MAY BE BENT IN FIELD OR SHOP.

## LAYING OUT TRANVERSE JOINTS

UNLESS SHOWN ON BRIDGE PLANS

USE A TRANSVERSE JOINT WHEN BARREL LENGTH IS OVER 80 FEET. USE ADDITIONAL JOINTS TO LIMIT CUT SECTION LENGTH AND END SECTION BARREL LENGTH MEASURED ALONG CENTERLINE OF CULVERT TO 50 FEET.

MINIMUM END SECTION LENGTH SHALL BE 3 FEET MEASURED ALONG THE SHORTEST WALL FROM THE INSIDE FACE OF HEADWALL TO THE TRANSVERSE JOINT.

TO AVOID LOCATING TRANSVERSE JOINTS UNDER A TRAVELED WAY WITH DESIGN FILLS 2 FEET OR LESS THE FOLLOWING SHALL APPLY:

BARREL LENGTH UP TO 90 FEET WITHOUT A TRANSVERSE JOINT

CUT SECTION LENGTHS UP TO 60 FEET

WHEN BARREL AND CUT SECTION LENGTH RESTRICTIONS REQUIRE TRANSVERSE JOINTS TO BE LOCATED UNDER A TRAVELED WAY WITH DESIGN FILLS 2 FEET OR LESS, THE JOINTS SHALL BE LOCATED TO MINIMIZE THE LENGTH OF JOINT UNDER THE TRAVELED WAY.

TRAVELED WAY IS THE ROADWAY WIDTH MINUS SHOULDER WIDTHS.

FOR CUT SECTION DETAILS, SEE 703.86.

## GENERAL NOTES:

FOR SECTIONS THRU BARREL, WINGS AND HEADWALLS, SEE SHEET 3 OF 3. FOR BAR SIZES, SPACING AND DIMENSIONS OF ALL REINFORCEMENT EXCEPT J5 BARS, SEE 703.87. FOR J5 BARS, SEE 703.37.

CONSTRUCTION JOINT KEY NOT SHOWN FOR CLARITY IN PLAN AND ELEVATION, SEE SHEET 3 OF 3 FOR DETAILS.

DRAWING NOT TO SCALE. FOLLOW DIMENSIONS.

MINIMUM CLEARANCE TO REINFORCING STEEL SHALL BE 1½".

LAP LONGITUDINAL BARS A MINIMUM OF 23" AT SPLICES.

BEVELED HEADWALL SHALL BE LOCATED AT UPSTREAM END.

(a) SAME SIZE AND SPACING AS ADJACENT B BARS

(b) VARIES, 12" MAXIMUM

(c) J4 BAR SPACING

(d) SAME SIZE AND SPACING AS A2 BARS

(e) A2 BAR SPACING

MISSOURI HIGHWAYS AND TRANSPORTATION COMMISSION
105 WEST CAPITOL
JEFFERSON CITY, MO 65102
1-888-ASK-MODOT (1-888-275-6636)

STATE OF MISSOURI
DENNIS W. HECKMAN
NUMBER PE-27141
PROFESSIONAL ENGINEER
THIS SHEET WAS SIGNED, SEALED AND DATED ELECTRONICALLY.

# CONCRETE TRIPLE BOX CULVERT

SKEW: SQUARE
WINGS: FLARED

REINFORCEMENT

| DATE EFFECTIVE: | 12/01/2011 | 703.81H | SHEET NO. 1 OF 3 |
|---|---|---|---|
| DATE PREPARED: | 9/29/2011 | | |

IF A SEAL IS PRESENT ON THIS SHEET IT HAS BEEN ELECTRONICALLY SEALED AND DATED.

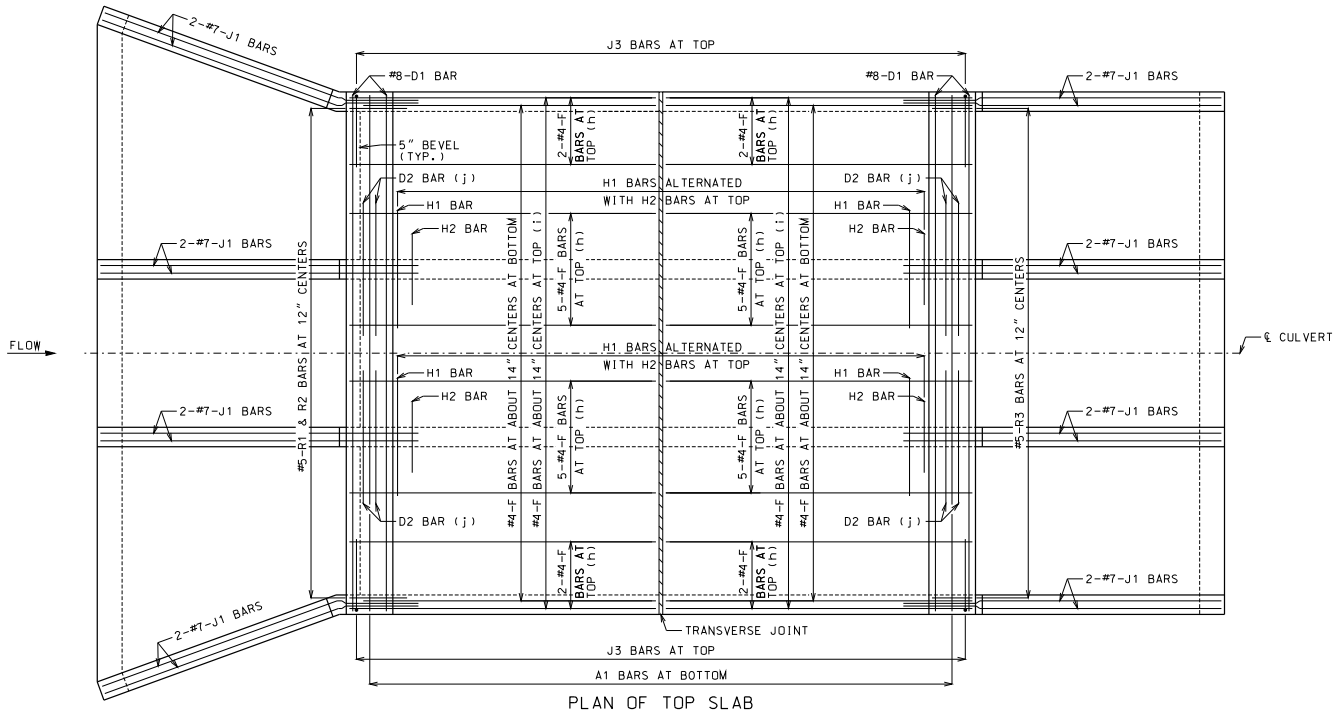


PLAN OF TOP SLAB

B BARS IN WALLS ARE NOT SHOWN FOR CLARITY.
FOR PLACEMENT, SEE SHEET 1 OF 3.

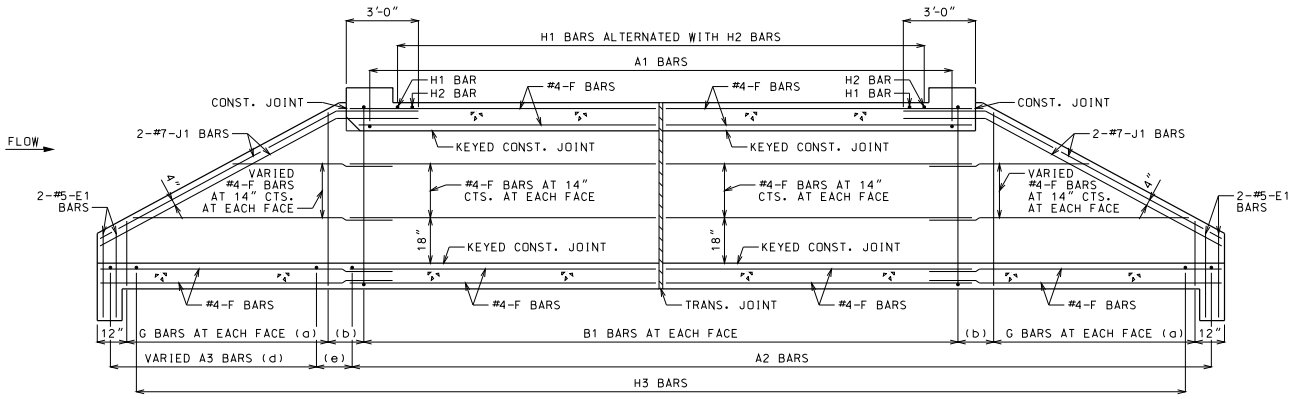


SECTION NEAR INTERIOR WALL

J1 BARS MAY BE BENT IN FIELD OR SHOP.

## GENERAL NOTES:

FOR SECTIONS THRU BARREL, WINGS AND HEADWALLS, SEE SHEET 3 OF 3. FOR BAR SIZES, SPACING AND DIMENSIONS OF ALL REINFORCEMENT EXCEPT J5 BARS, SEE 703.87. FOR J5 BARS, SEE 703.37.

CONSTRUCTION JOINT KEY NOT SHOWN FOR CLARITY IN PLAN AND SECTION, SEE SHEET 3 OF 3 FOR DETAILS.

DRAWING NOT TO SCALE. FOLLOW DIMENSIONS.

MINIMUM CLEARANCE TO REINFORCING STEEL SHALL BE 1½".

LAP LONGITUDINAL BARS A MINIMUM OF 23" AT SPLICES.

BEVELED HEADWALL SHALL BE LOCATED AT UPSTREAM END.

(a) SAME SIZE AND SPACING AS ADJACENT B BARS

(b) VARIES, 12" MAXIMUM

(c) NOT SPECIFIED ON THIS SHEET

(d) SAME SIZE AND SPACING AS A2 BARS

(e) A2 BAR SPACING

(f) NOT SPECIFIED ON THIS SHEET

(g) NOT SPECIFIED ON THIS SHEET

(h) FOR DESIGN FILLS OVER 2'-0"

(i) FOR DESIGN FILLS 2'-0" OR LESS

(j) NOT REQUIRED FOR CLEAR SPANS ≤ 10'-0"
#8 FOR CLEAR SPAN > 10'-0"
#9 FOR CLEAR SPAN > 13'-0"

IF REQUIRED, THE MINIMUM LENGTH EACH SIDE OF ℄ WALL SHALL BE THE GREATER OF 48 BAR DIAMETERS OR ¼ CLEAR SPAN. THE CLEAR SPAN IS PARALLEL TO LONG DIRECTION OF HEADWALL.

IF A SEAL IS PRESENT ON THIS SHEET IT HAS BEEN ELECTRONICALLY SEALED AND DATED.

MISSOURI HIGHWAYS AND TRANSPORTATION COMMISSION
105 WEST CAPITOL
JEFFERSON CITY, MO 65102
1-888-ASK-MODOT (1-888-275-6636)

STATE OF MISSOURI
DENNIS W. HECKMAN
NUMBER PE-27141
PROFESSIONAL ENGINEER
THIS SHEET HAS BEEN SIGNED, SEALED AND DATED ELECTRONICALLY.

# CONCRETE TRIPLE BOX CULVERT

SKEW: SQUARE
WINGS: FLARED

REINFORCEMENT

DATE EFFECTIVE: 12/01/2011
DATE PREPARED: 9/29/2011

703.81H

SHEET NO. 2 OF 3

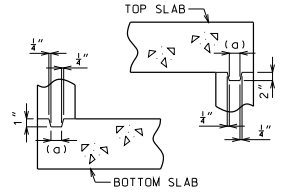


KEYED CONSTRUCTION JOINT

(a) APPROXIMATELY ONE-THIRD OF WALL THICKNESS

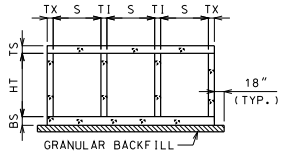


GRANULAR BACKFILL LIMITS AND MEMBER DIMENSIONS

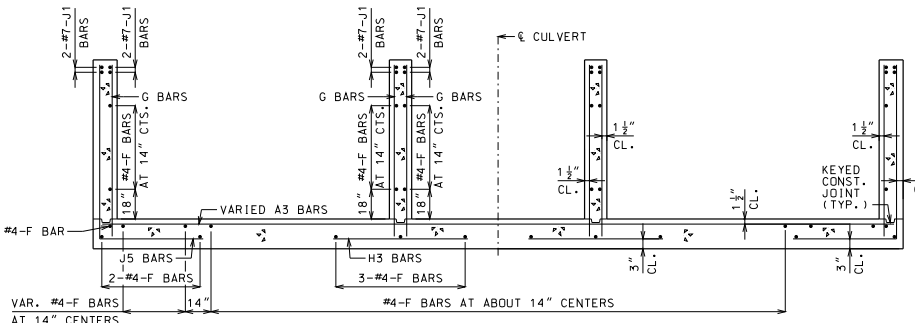


UPSTREAM FLARED WINGS REINFORCEMENT

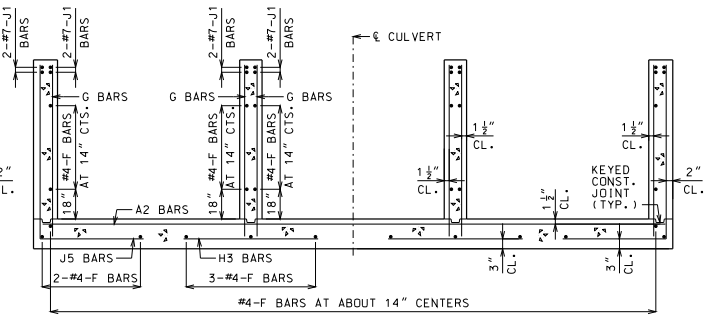


DOWNSTREAM WINGS REINFORCEMENT

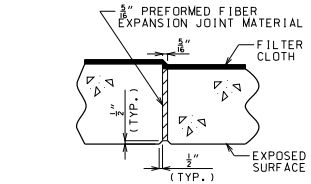


TRANSVERSE JOINT THRU BARREL

PREFORMED FIBER EXPANSION JOINT MATERIAL SHALL BE SECURELY STITCHED TO ONE FACE OF THE CONCRETE WITH NO. 10 GAGE COPPER WIRE OR NO. 12 GAGE SOFT DRAWN GALVANIZED STEEL WIRE.

FILTER CLOTH 3 FEET IN WIDTH AND DOUBLE THICKNESS SHALL BE CENTERED ON TRANSVERSE JOINTS IN TOP SLAB AND SIDEWALLS WITH EDGES SEALED WITH MASTIC OR TWO SIDED TAPE. FILTER CLOTH SHALL BE A SUBSURFACE DRAINAGE GEOTEXTILE IN ACCORDANCE WITH SECTION 1011 OF THE STANDARD SPECIFICATIONS FOR HIGHWAY CONSTRUCTION. COST OF FURNISHING AND INSTALLING FILTER CLOTH WILL BE CONSIDERED COMPLETELY COVERED BY THE CONTRACT UNIT PRICE FOR OTHER ITEMS.

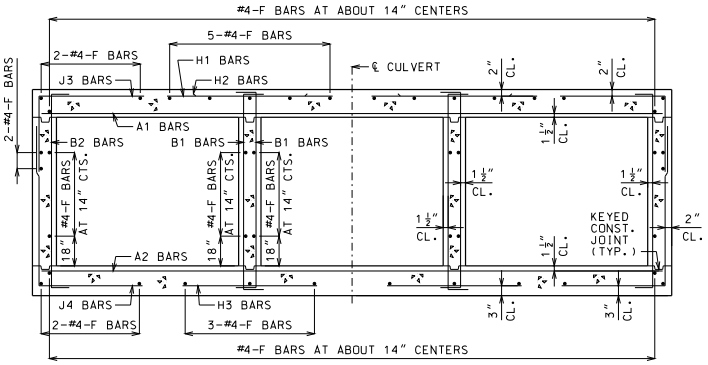


BARREL REINFORCEMENT

FOR DESIGN FILLS OVER 2'-0"

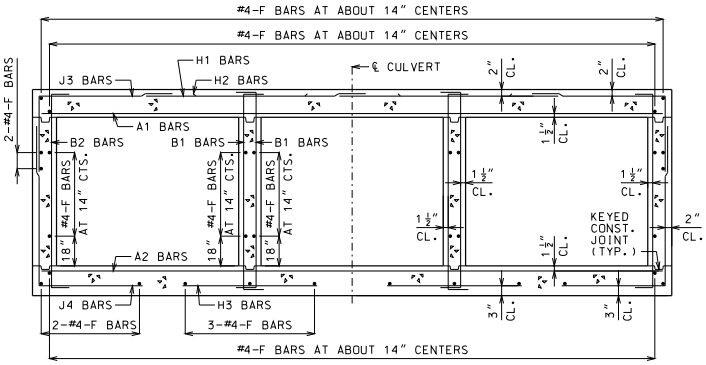


BARREL REINFORCEMENT

FOR DESIGN FILLS 2'-0" OR LESS

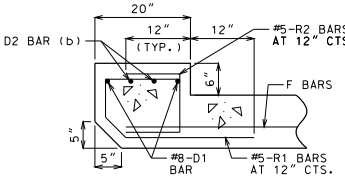


UPSTREAM HEADWALL REINFORCEMENT

NEAR INTERIOR WALL

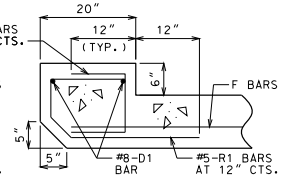


UPSTREAM HEADWALL REINFORCEMENT

NEAR MIDSPAN

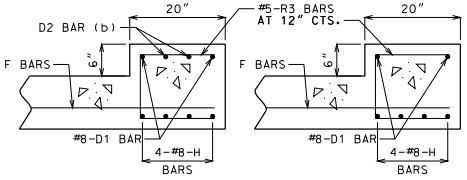


DOWNSTREAM HEADWALL REINFORCEMENT

NEAR INTERIOR WALL




DOWNSTREAM HEADWALL REINFORCEMENT

NEAR MIDSPAN

(b) NOT REQUIRED FOR CLEAR SPANS ≤ 10'-0"
#8 FOR CLEAR SPAN > 10'-0"
#9 FOR CLEAR SPAN > 13'-0"

IF D2 BARS ARE REQUIRED, THE MINIMUM LENGTH EACH SIDE OF ℄ WALL SHALL BE THE GREATER OF 48 BAR DIAMETERS OR ¼ CLEAR SPAN. THE CLEAR SPAN IS PARALLEL TO LONG DIRECTION OF HEADWALL.

GENERAL NOTES:

FOR MEMBER THICKNESS AND FOR BAR SIZES, SPACING AND DIMENSIONS OF ALL REINFORCEMENT EXCEPT J5 BARS, SEE 703.87. FOR J5 BARS, SEE 703.37.

BARREL AND WINGS SECTIONS ARE SYMMETRICAL ABOUT AND NORMAL TO ℄ CULVERT. HEADWALL SECTIONS ARE NORMAL TO LONG DIRECTION OF HEADWALL.

DRAWING NOT TO SCALE. FOLLOW DIMENSIONS.

MINIMUM CLEARANCE TO REINFORCING STEEL SHALL BE 1½".


MISSOURI HIGHWAYS AND TRANSPORTATION COMMISSION
105 WEST CAPITOL
JEFFERSON CITY, MO 65102
1-888-ASK-MODOT (1-888-275-6636)


STATE OF MISSOURI
DENNIS W. HECKMAN
NUMBER PE-27141
PROFESSIONAL ENGINEER
THIS SHEET HAS BEEN SIGNED, SEALED AND DATED ELECTRONICALLY.

# CONCRETE TRIPLE BOX CULVERT

SKEW: SQUARE
WINGS: FLARED

SECTIONS

| DATE EFFECTIVE: | 12/01/2011 | 703.81H | SHEET NO. 3 OF 3 |
|---|---|---|---|
| DATE PREPARED: | 9/29/2011 | | |

IF A SEAL IS PRESENT ON THIS SHEET IT HAS BEEN ELECTRONICALLY SEALED AND DATED.

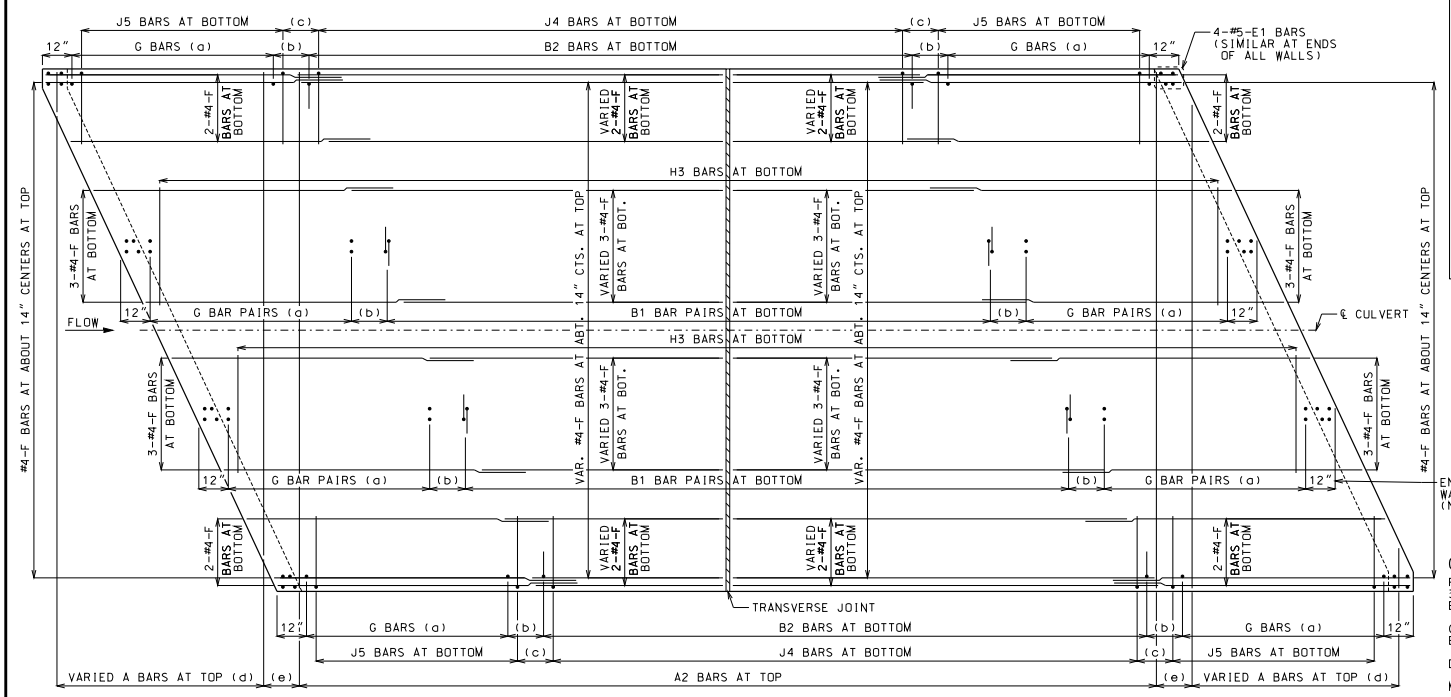


PLAN OF BOTTOM SLAB

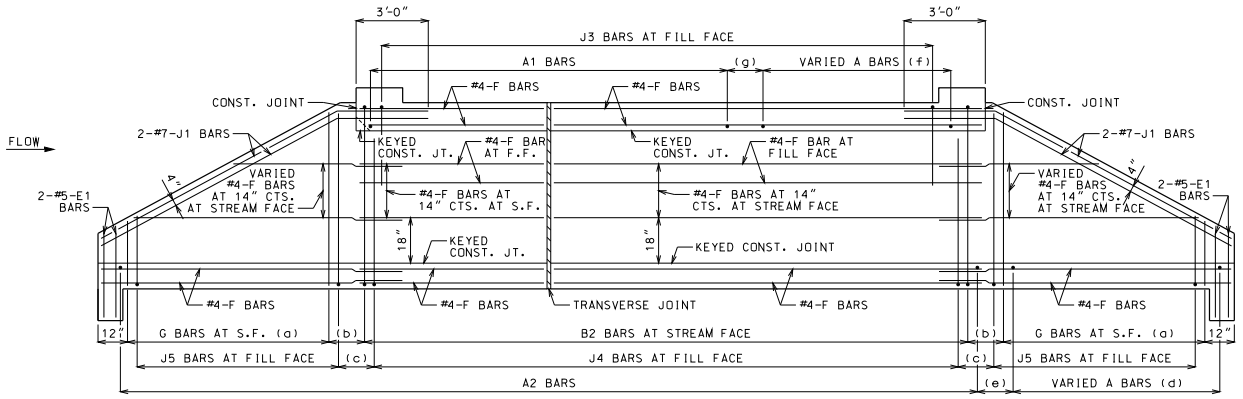


ELEVATION OF EXTERIOR WALL

J1 BARS MAY BE BENT IN FIELD OR SHOP.

## LAYING OUT TRANVERSE JOINTS

UNLESS SHOWN ON BRIDGE PLANS

USE A TRANSVERSE JOINT WHEN BARREL LENGTH IS OVER 80 FEET. USE ADDITIONAL JOINTS TO LIMIT CUT SECTION LENGTH AND END SECTION BARREL LENGTH MEASURED ALONG CENTERLINE OF CULVERT TO 50 FEET.

MINIMUM END SECTION LENGTH SHALL BE 3 FEET MEASURED ALONG THE SHORTEST WALL FROM THE INSIDE FACE OF HEADWALL TO THE TRANSVERSE JOINT.

TO AVOID LOCATING TRANSVERSE JOINTS UNDER A TRAVELED WAY WITH DESIGN FILLS 2 FEET OR LESS THE FOLLOWING SHALL APPLY:

BARREL LENGTH UP TO 90 FEET WITHOUT A TRANSVERSE JOINT

CUT SECTION LENGTHS UP TO 60 FEET

WHEN BARREL AND CUT SECTION LENGTH RESTRICTIONS REQUIRE TRANSVERSE JOINTS TO BE LOCATED UNDER A TRAVELED WAY WITH DESIGN FILLS 2 FEET OR LESS, THE JOINTS SHALL BE LOCATED TO MINIMIZE THE LENGTH OF JOINT UNDER THE TRAVELED WAY.

TRAVELED WAY IS THE ROADWAY WIDTH MINUS SHOULDER WIDTHS.

FOR CUT SECTION DETAILS, SEE 703.86.

## GENERAL NOTES:

FOR SECTIONS THRU BARREL, WINGS AND HEADWALLS, SEE SHEET 3 OF 3. FOR BAR SIZES, SPACING AND DIMENSIONS OF ALL REINFORCEMENT EXCEPT J5 BARS, SEE 703.87. FOR J5 BARS, SEE 703.37.

CONSTRUCTION JOINT KEY NOT SHOWN FOR CLARITY IN PLAN AND ELEVATION, SEE SHEET 3 OF 3 FOR DETAILS.

DRAWING NOT TO SCALE. FOLLOW DIMENSIONS.

MINIMUM CLEARANCE TO REINFORCING STEEL SHALL BE 1½".

LAP LONGITUDINAL BARS A MINIMUM OF 23" AT SPLICES.

BEVELED HEADWALL SHALL BE LOCATED AT UPSTREAM END.

(a) SAME SIZE AND SPACING AS ADJACENT B BARS

(b) VARIES, 12" MAXIMUM

(c) J4 BAR SPACING

(d) SAME SIZE AND SPACING AS A2 BARS

(e) A2 BAR SPACING

(f) SAME SIZE AND SPACING AS A1 BARS

(g) A1 BAR SPACING

MISSOURI HIGHWAYS AND TRANSPORTATION COMMISSION
105 WEST CAPITOL
JEFFERSON CITY, MO 65102
1-888-ASK-MODOT (1-888-275-6636)

STATE OF MISSOURI
DENNIS W. HECKMAN
NUMBER PE-27141
PROFESSIONAL ENGINEER
THIS SHEET HAS BEEN SIGNED, SEALED AND DATED ELECTRONICALLY.

# CONCRETE TRIPLE BOX CULVERT

SKEW: LEFT ADVANCE
WINGS: STRAIGHT

REINFORCEMENT

| DATE EFFECTIVE: | 12/01/2011 | 703.82H | SHEET NO. 1 OF 3 |
|---|---|---|---|
| DATE PREPARED: | 9/29/2011 | | |

IF A SEAL IS PRESENT ON THIS SHEET IT HAS BEEN ELECTRONICALLY SEALED AND DATED.

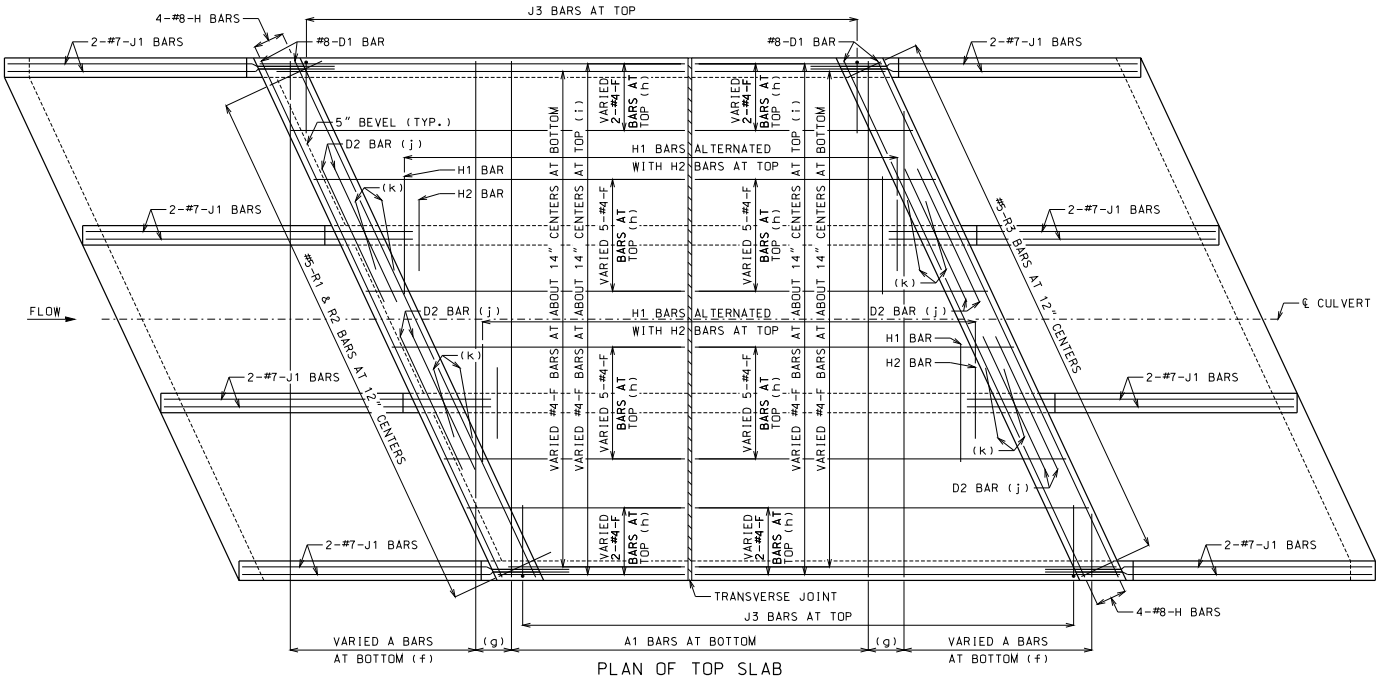


PLAN OF TOP SLAB

B BARS IN WALLS ARE NOT SHOWN FOR CLARITY.
FOR PLACEMENT, SEE SHEET 1 OF 3.

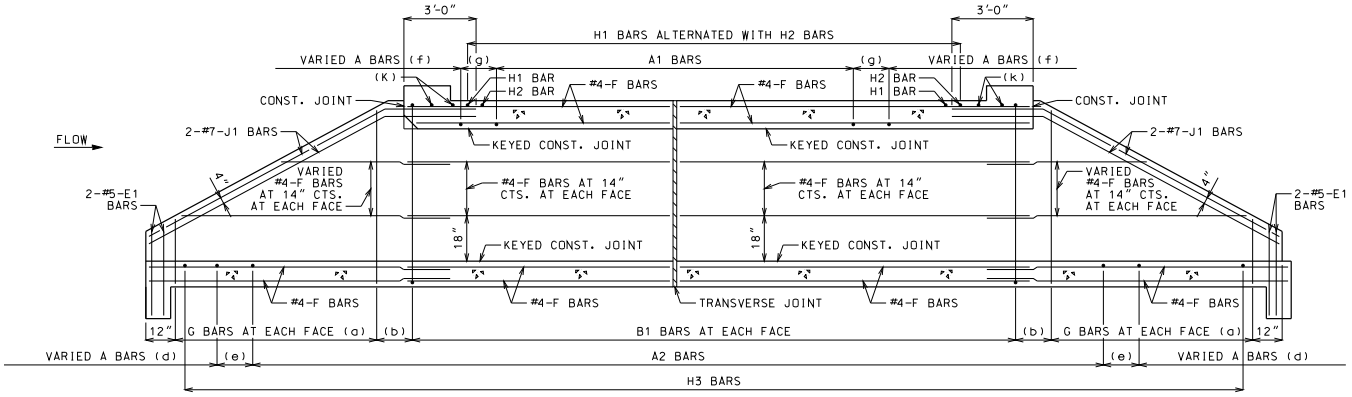


SECTION NEAR INTERIOR WALL

J1 BARS MAY BE BENT IN FIELD OR SHOP.

## GENERAL NOTES:

FOR SECTIONS THRU BARREL, WINGS AND HEADWALLS, SEE SHEET 3 OF 3. FOR BAR SIZES, SPACING AND DIMENSIONS OF ALL REINFORCEMENT EXCEPT J5 BARS, SEE 703.87. FOR J5 BARS, SEE 703.37.

CONSTRUCTION JOINT KEY NOT SHOWN FOR CLARITY IN PLAN AND SECTION, SEE SHEET 3 OF 3 FOR DETAILS.

DRAWING NOT TO SCALE. FOLLOW DIMENSIONS.

MINIMUM CLEARANCE TO REINFORCING STEEL SHALL BE 1½".

LAP LONGITUDINAL BARS A MINIMUM OF 23" AT SPLICES.

BEVELED HEADWALL SHALL BE LOCATED AT UPSTREAM END.

(a) SAME SIZE AND SPACING AS ADJACENT B BARS

(b) VARIES, 12" MAXIMUM

(c) NOT SPECIFIED ON THIS SHEET

(d) SAME SIZE AND SPACING AS A2 BARS

(e) A2 BAR SPACING

(f) SAME SIZE AND SPACING AS A1 BARS

(g) A1 BAR SPACING

(h) FOR DESIGN FILLS OVER 2'-0"

(i) FOR DESIGN FILLS 2'-0" OR LESS

(j) NOT REQUIRED FOR CLEAR SPANS ≤ 10'-0"
#8 FOR CLEAR SPAN > 10'-0"
#9 FOR CLEAR SPAN > 13'-0"

IF REQUIRED, THE MINIMUM LENGTH EACH SIDE OF ℄ WALL SHALL BE THE GREATER OF 48 BAR DIAMETERS OR ¼ CLEAR SPAN. THE CLEAR SPAN IS PARALLEL TO LONG DIRECTION OF HEADWALL.

(k) H2 BARS AS REQUIRED, QUANTITY OF BARS VARIES WITH SKEW.

MISSOURI HIGHWAYS AND TRANSPORTATION COMMISSION
105 WEST CAPITOL
JEFFERSON CITY, MO 65102
1-888-ASK-MODOT (1-888-275-6636)

STATE OF MISSOURI
DENNIS W. HECKMAN
NUMBER PE-27141
PROFESSIONAL ENGINEER
THIS SHEET HAS BEEN SIGNED, SEALED AND DATED ELECTRONICALLY.

# CONCRETE TRIPLE BOX CULVERT

SKEW: LEFT ADVANCE
WINGS: STRAIGHT

REINFORCEMENT

DATE EFFECTIVE: 12/01/2011
DATE PREPARED: 9/29/2011

703.82H

SHEET NO. 2 OF 3

IF A SEAL IS PRESENT ON THIS SHEET IT HAS BEEN ELECTRONICALLY SEALED AND DATED.

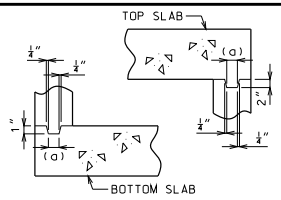


KEYED CONSTRUCTION JOINT

(a) APPROXIMATELY ONE-THIRD OF WALL THICKNESS

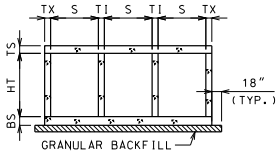


GRANULAR BACKFILL LIMITS AND MEMBER DIMENSIONS

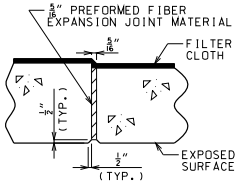


TRANSVERSE JOINT THRU BARREL

PREFORMED FIBER EXPANSION JOINT MATERIAL SHALL BE SECURELY STITCHED TO ONE FACE OF THE CONCRETE WITH NO. 10 GAGE COPPER WIRE OR NO. 12 GAGE SOFT DRAWN GALVANIZED STEEL WIRE.

FILTER CLOTH 3 FEET IN WIDTH AND DOUBLE THICKNESS SHALL BE CENTERED ON TRANSVERSE JOINTS IN TOP SLAB AND SIDEWALLS WITH EDGES SEALED WITH MASTIC OR TWO SIDED TAPE. FILTER CLOTH SHALL BE A SUBSURFACE DRAINAGE GEOTEXTILE IN ACCORDANCE WITH SECTION 1011 OF THE STANDARD SPECIFICATIONS FOR HIGHWAY CONSTRUCTION. COST OF FURNISHING AND INSTALLING FILTER CLOTH WILL BE CONSIDERED COMPLETELY COVERED BY THE CONTRACT UNIT PRICE FOR OTHER ITEMS.

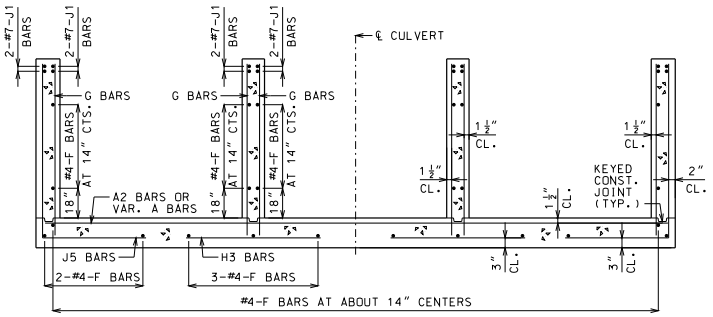


UPSTREAM AND DOWNSTREAM WINGS REINFORCEMENT

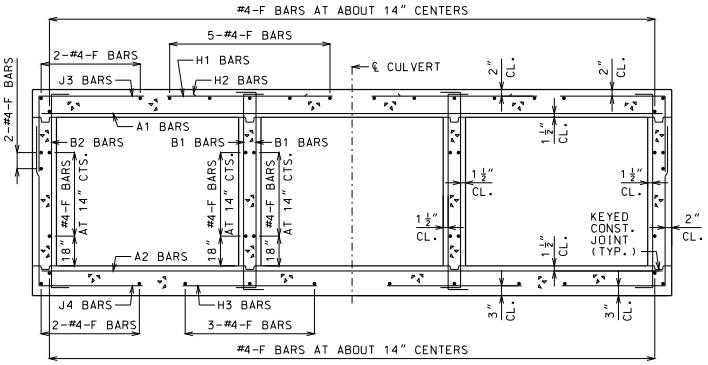


BARREL REINFORCEMENT

FOR DESIGN FILLS OVER 2'-0"

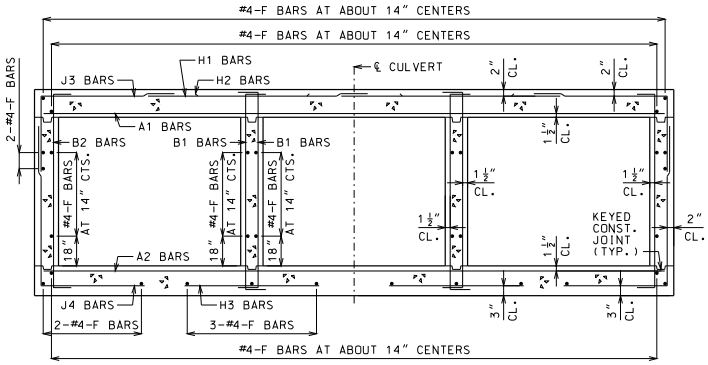


BARREL REINFORCEMENT

FOR DESIGN FILLS 2'-0" OR LESS

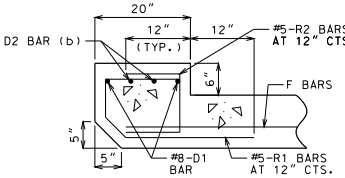


UPSTREAM HEADWALL REINFORCEMENT

NEAR INTERIOR WALL

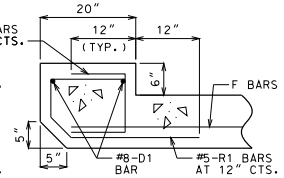


UPSTREAM HEADWALL REINFORCEMENT

NEAR MIDSPAN

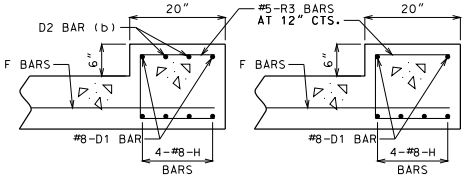


DOWNSTREAM HEADWALL REINFORCEMENT

NEAR INTERIOR WALL




DOWNSTREAM HEADWALL REINFORCEMENT

NEAR MIDSPAN

(b) NOT REQUIRED FOR CLEAR SPANS ≤ 10'-0"
#8 FOR CLEAR SPAN > 10'-0"
#9 FOR CLEAR SPAN > 13'-0"

IF D2 BARS ARE REQUIRED, THE MINIMUM LENGTH EACH SIDE OF ℄ WALL SHALL BE THE GREATER OF 48 BAR DIAMETERS OR ¼ CLEAR SPAN. THE CLEAR SPAN IS PARALLEL TO LONG DIRECTION OF HEADWALL.

GENERAL NOTES:

FOR MEMBER THICKNESS AND FOR BAR SIZES, SPACING AND DIMENSIONS OF ALL REINFORCEMENT EXCEPT J5 BARS, SEE 703.87. FOR J5 BARS, SEE 703.37.

BARREL AND WINGS SECTIONS ARE SYMMETRICAL ABOUT AND NORMAL TO ℄ CULVERT. HEADWALL SECTIONS ARE NORMAL TO LONG DIRECTION OF HEADWALL.

DRAWING NOT TO SCALE. FOLLOW DIMENSIONS.

MINIMUM CLEARANCE TO REINFORCING STEEL SHALL BE 1½".

MISSOURI HIGHWAYS AND TRANSPORTATION COMMISSION
105 WEST CAPITOL
JEFFERSON CITY, MO 65102
1-888-ASK-MODOT (1-888-275-6636)

STATE OF MISSOURI
DENNIS W. HECKMAN
NUMBER PE-27141
PROFESSIONAL ENGINEER
THIS SHEET HAS BEEN SIGNED, SEALED AND DATED ELECTRONICALLY.

# CONCRETE TRIPLE BOX CULVERT

SKEW: LEFT ADVANCE
WINGS: STRAIGHT

SECTIONS

| DATE EFFECTIVE: | 12/01/2011 | 703.82H | SHEET NO. 3 OF 3 |
|---|---|---|---|
| DATE PREPARED: | 9/29/2011 | | |

IF A SEAL IS PRESENT ON THIS SHEET IT HAS BEEN ELECTRONICALLY SEALED AND DATED.

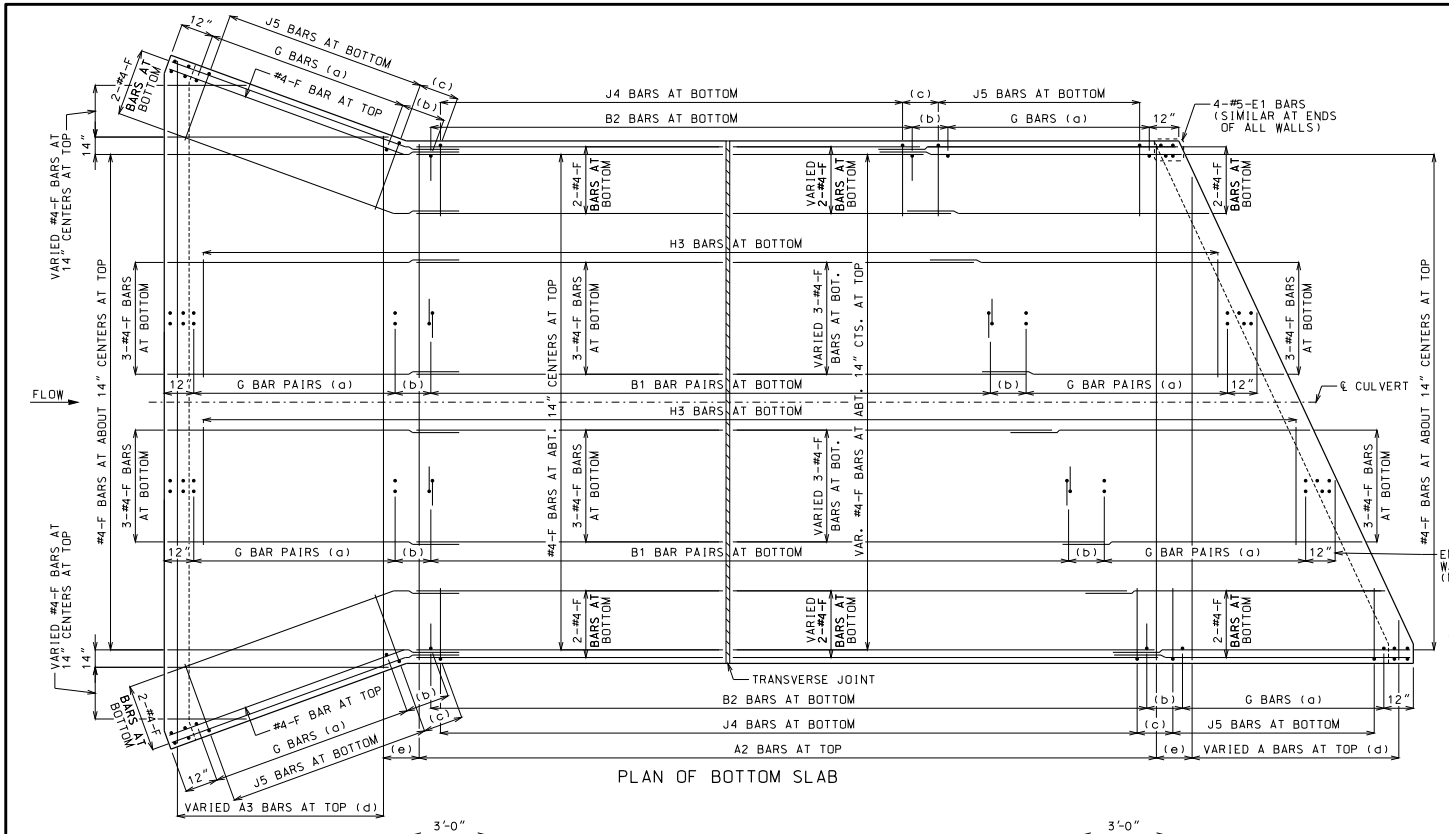


PLAN OF BOTTOM SLAB

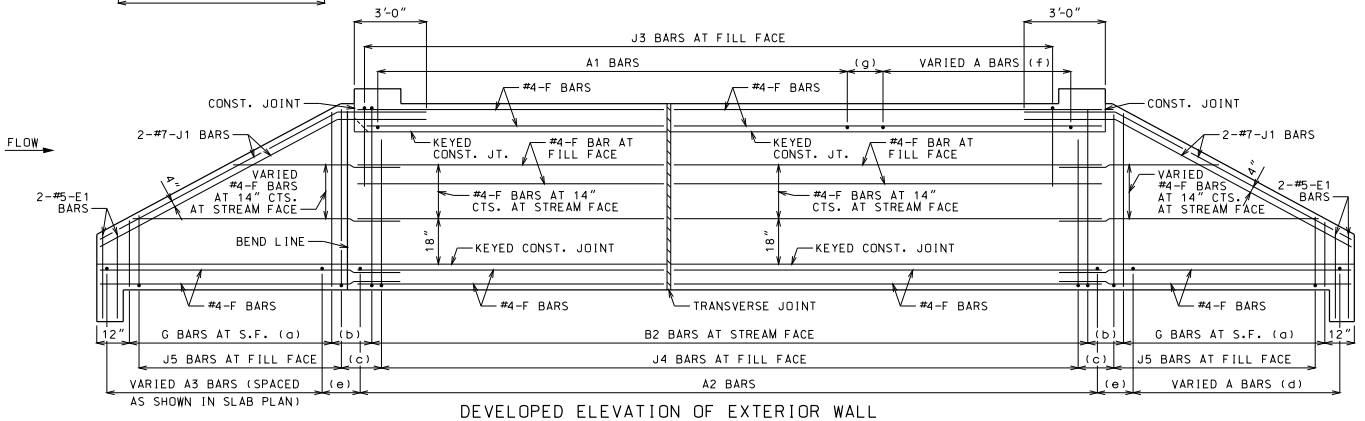


DEVELOPED ELEVATION OF EXTERIOR WALL

J1 BARS MAY BE BENT IN FIELD OR SHOP.

## LAYING OUT TRANVERSE JOINTS

UNLESS SHOWN ON BRIDGE PLANS

USE A TRANSVERSE JOINT WHEN BARREL LENGTH IS OVER 80 FEET. USE ADDITIONAL JOINTS TO LIMIT CUT SECTION LENGTH AND END SECTION BARREL LENGTH MEASURED ALONG CENTERLINE OF CULVERT TO 50 FEET.

MINIMUM END SECTION LENGTH SHALL BE 3 FEET MEASURED ALONG THE SHORTEST WALL FROM THE INSIDE FACE OF HEADWALL TO THE TRANSVERSE JOINT.

TO AVOID LOCATING TRANSVERSE JOINTS UNDER A TRAVELED WAY WITH DESIGN FILLS 2 FEET OR LESS THE FOLLOWING SHALL APPLY:

BARREL LENGTH UP TO 90 FEET WITHOUT A TRANSVERSE JOINT

CUT SECTION LENGTHS UP TO 60 FEET

WHEN BARREL AND CUT SECTION LENGTH RESTRICTIONS REQUIRE TRANSVERSE JOINTS TO BE LOCATED UNDER A TRAVELED WAY WITH DESIGN FILLS 2 FEET OR LESS, THE JOINTS SHALL BE LOCATED TO MINIMIZE THE LENGTH OF JOINT UNDER THE TRAVELED WAY.

TRAVELED WAY IS THE ROADWAY WIDTH MINUS SHOULDER WIDTHS.

FOR CUT SECTION DETAILS, SEE 703.86.

## GENERAL NOTES:

FOR SECTIONS THRU BARREL, WINGS AND HEADWALLS, SEE SHEET 3 OF 3. FOR BAR SIZES, SPACING AND DIMENSIONS OF ALL REINFORCEMENT EXCEPT J5 BARS, SEE 703.87. FOR J5 BARS, SEE 703.37.

CONSTRUCTION JOINT KEY NOT SHOWN FOR CLARITY IN PLAN AND ELEVATION, SEE SHEET 3 OF 3 FOR DETAILS.

DRAWING NOT TO SCALE. FOLLOW DIMENSIONS.

MINIMUM CLEARANCE TO REINFORCING STEEL SHALL BE 1½".

LAP LONGITUDINAL BARS A MINIMUM OF 23" AT SPLICES.

BEVELED HEADWALL SHALL BE LOCATED AT UPSTREAM END.

(a) SAME SIZE AND SPACING AS ADJACENT B BARS

(b) VARIES, 12" MAXIMUM

(c) J4 BAR SPACING

(d) SAME SIZE AND SPACING AS A2 BARS

(e) A2 BAR SPACING

(f) SAME SIZE AND SPACING AS A1 BARS

(g) A1 BAR SPACING

MISSOURI HIGHWAYS AND TRANSPORTATION COMMISSION
105 WEST CAPITOL
JEFFERSON CITY, MO 65102
1-888-ASK-MODOT (1-888-275-6636)

STATE OF MISSOURI
DENNIS W. HECKMAN
NUMBER PE-27141
PROFESSIONAL ENGINEER
THIS SHEET HAS BEEN SIGNED, SEALED AND DATED ELECTRONICALLY.

# CONCRETE TRIPLE BOX CULVERT

SKEW: LEFT ADVANCE
WINGS: FLARED

REINFORCEMENT

| DATE EFFECTIVE: | 12/01/2011 | 703.83H | SHEET NO. 1 OF 3 |
|---|---|---|---|
| DATE PREPARED: | 9/29/2011 | | |

IF A SEAL IS PRESENT ON THIS SHEET IT HAS BEEN ELECTRONICALLY SEALED AND DATED.

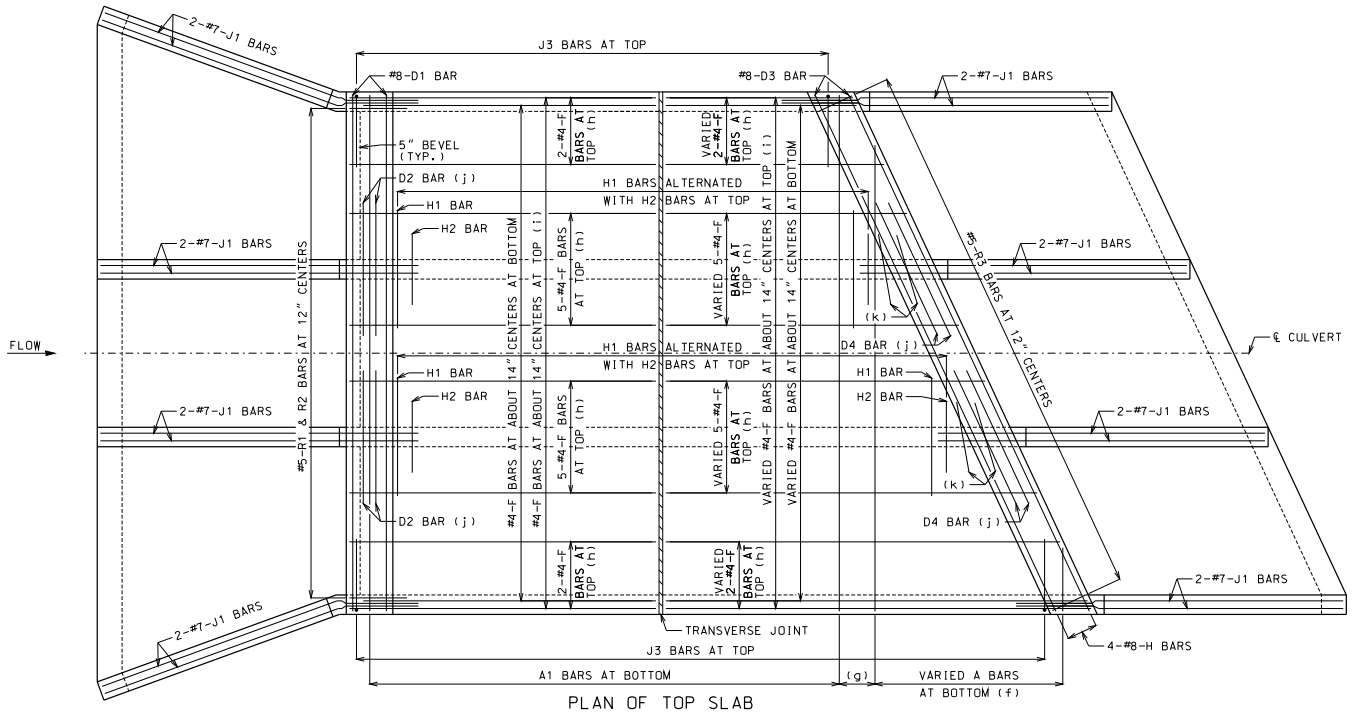


PLAN OF TOP SLAB

B BARS IN WALLS ARE NOT SHOWN FOR CLARITY. FOR PLACEMENT, SEE SHEET 1 OF 3.

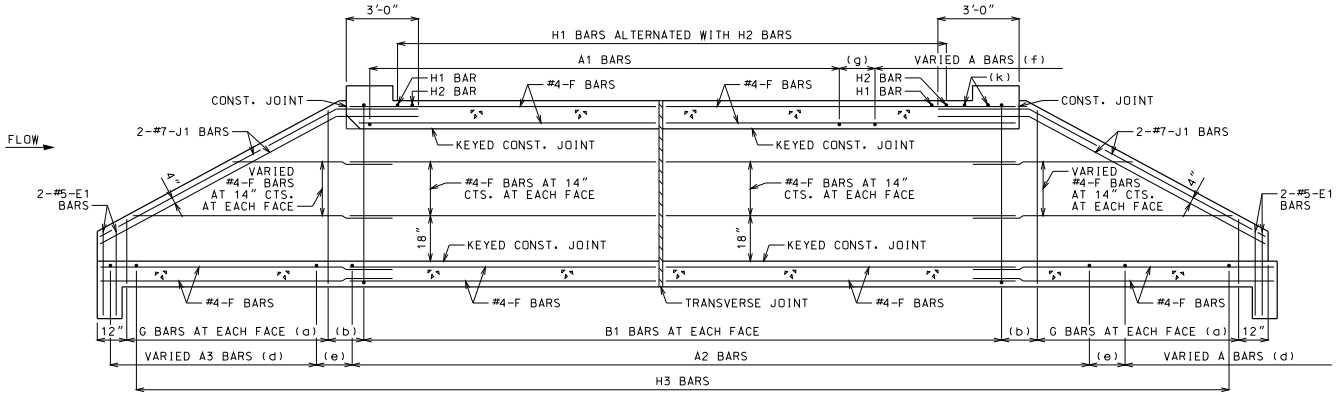


SECTION NEAR INTERIOR WALL

J1 BARS MAY BE BENT IN FIELD OR SHOP.

## GENERAL NOTES:

FOR SECTIONS THRU BARREL, WINGS AND HEADWALLS, SEE SHEET 3 OF 3. FOR BAR SIZES, SPACING AND DIMENSIONS OF ALL REINFORCEMENT EXCEPT J5 BARS, SEE 703.87. FOR J5 BARS, SEE 703.37.

CONSTRUCTION JOINT KEY NOT SHOWN FOR CLARITY IN PLAN AND SECTION, SEE SHEET 3 OF 3 FOR DETAILS.

DRAWING NOT TO SCALE. FOLLOW DIMENSIONS.

MINIMUM CLEARANCE TO REINFORCING STEEL SHALL BE 1½".

LAP LONGITUDINAL BARS A MINIMUM OF 23" AT SPLICES.

BEVELED HEADWALL SHALL BE LOCATED AT UPSTREAM END.

(a) SAME SIZE AND SPACING AS ADJACENT B BARS

(b) VARIES, 12" MAXIMUM

(c) NOT SPECIFIED ON THIS SHEET

(d) SAME SIZE AND SPACING AS A2 BARS

(e) A2 BAR SPACING

(f) SAME SIZE AND SPACING AS A1 BARS

(g) A1 BAR SPACING

(h) FOR DESIGN FILLS OVER 2'-0"

(i) FOR DESIGN FILLS 2'-0" OR LESS

(j) NOT REQUIRED FOR CLEAR SPANS ≤ 10'-0"
#8 FOR CLEAR SPAN > 10'-0"
#9 FOR CLEAR SPAN > 13'-0"

IF REQUIRED, THE MINIMUM LENGTH EACH SIDE OF ℄ WALL SHALL BE THE GREATER OF 48 BAR DIAMETERS OR ¼ CLEAR SPAN. THE CLEAR SPAN IS PARALLEL TO LONG DIRECTION OF HEADWALL.

(k) H2 BARS AS REQUIRED, QUANTITY OF BARS VARIES WITH SKEW.

IF A SEAL IS PRESENT ON THIS SHEET IT HAS BEEN ELECTRONICALLY SEALED AND DATED.

MISSOURI HIGHWAYS AND TRANSPORTATION COMMISSION
105 WEST CAPITOL
JEFFERSON CITY, MO 65102
1-888-ASK-MODOT (1-888-275-6636)

STATE OF MISSOURI — DENNIS W. HECKMAN — NUMBER PE-27141 — PROFESSIONAL ENGINEER
THIS SHEET HAS BEEN SIGNED, SEALED AND DATED ELECTRONICALLY.

# CONCRETE TRIPLE BOX CULVERT

SKEW: LEFT ADVANCE
WINGS: FLARED

REINFORCEMENT

| DATE EFFECTIVE: | 12/01/2011 | 703.83H | SHEET NO. 2 OF 3 |
|---|---|---|---|
| DATE PREPARED: | 9/29/2011 | | |

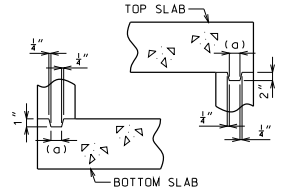


KEYED CONSTRUCTION JOINT

(a) APPROXIMATELY ONE-THIRD OF WALL THICKNESS

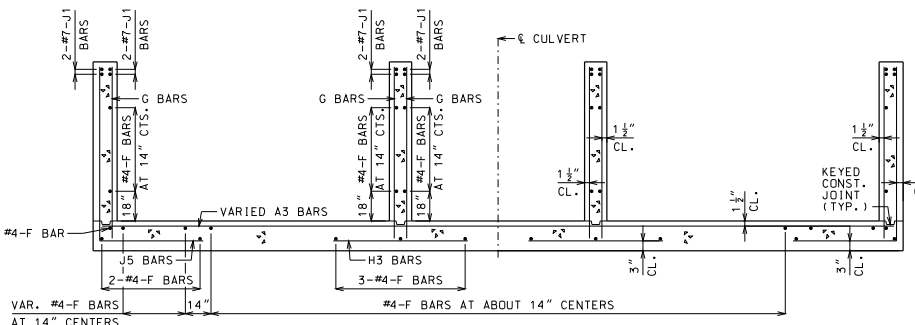


UPSTREAM FLARED WINGS REINFORCEMENT

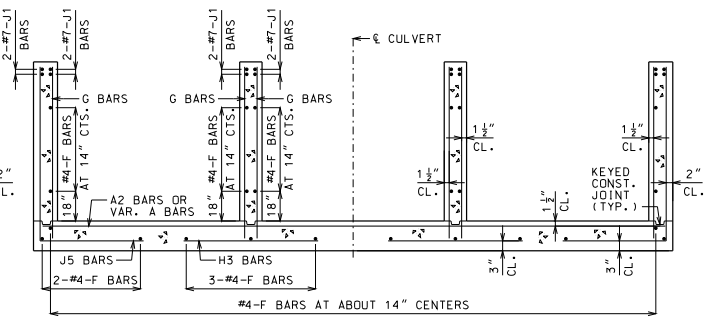


DOWNSTREAM WINGS REINFORCEMENT

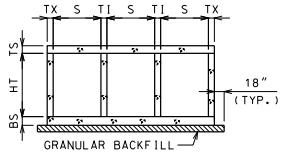


GRANULAR BACKFILL LIMITS AND MEMBER DIMENSIONS

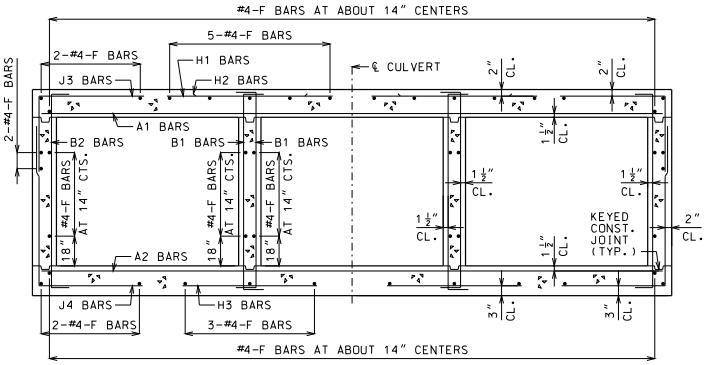


BARREL REINFORCEMENT

FOR DESIGN FILLS OVER 2'-0"

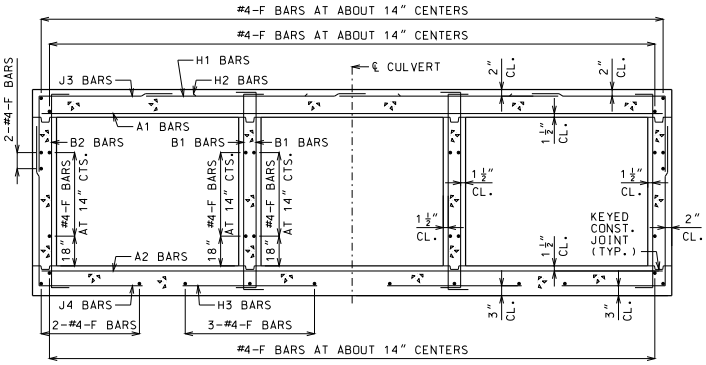


BARREL REINFORCEMENT

FOR DESIGN FILLS 2'-0" OR LESS

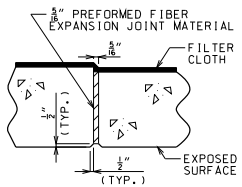


TRANSVERSE JOINT THRU BARREL

PREFORMED FIBER EXPANSION JOINT MATERIAL SHALL BE SECURELY STITCHED TO ONE FACE OF THE CONCRETE WITH NO. 10 GAGE COPPER WIRE OR NO. 12 GAGE SOFT DRAWN GALVANIZED STEEL WIRE.

FILTER CLOTH 3 FEET IN WIDTH AND DOUBLE THICKNESS SHALL BE CENTERED ON TRANSVERSE JOINTS IN TOP SLAB AND SIDEWALLS WITH EDGES SEALED WITH MASTIC OR TWO SIDED TAPE. FILTER CLOTH SHALL BE A SUBSURFACE DRAINAGE GEOTEXTILE IN ACCORDANCE WITH SECTION 1011 OF THE STANDARD SPECIFICATIONS FOR HIGHWAY CONSTRUCTION. COST OF FURNISHING AND INSTALLING FILTER CLOTH WILL BE CONSIDERED COMPLETELY COVERED BY THE CONTRACT UNIT PRICE FOR OTHER ITEMS.

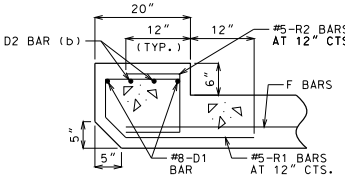


UPSTREAM HEADWALL REINFORCEMENT

NEAR INTERIOR WALL

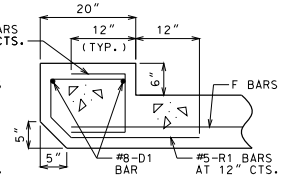


UPSTREAM HEADWALL REINFORCEMENT

NEAR MIDSPAN

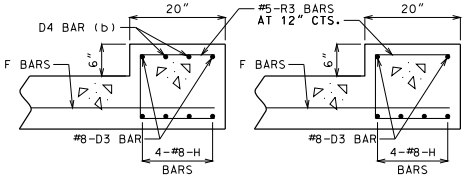


DOWNSTREAM HEADWALL REINFORCEMENT

NEAR INTERIOR WALL




DOWNSTREAM HEADWALL REINFORCEMENT

NEAR MIDSPAN

(b) NOT REQUIRED FOR CLEAR SPANS ≤ 10'-0"
#8 FOR CLEAR SPAN > 10'-0"
#9 FOR CLEAR SPAN > 13'-0"

IF D2 AND D4 BARS ARE REQUIRED, THE MINIMUM LENGTH EACH SIDE OF ℄ WALL SHALL BE THE GREATER OF 48 BAR DIAMETERS OR ¼ CLEAR SPAN. THE CLEAR SPAN IS PARALLEL TO LONG DIRECTION OF HEADWALL.

## GENERAL NOTES:

FOR MEMBER THICKNESS AND FOR BAR SIZES, SPACING AND DIMENSIONS OF ALL REINFORCEMENT EXCEPT J5 BARS, SEE 703.87. FOR J5 BARS, SEE 703.37.

BARREL AND WINGS SECTIONS ARE SYMMETRICAL ABOUT AND NORMAL TO ℄ CULVERT. HEADWALL SECTIONS ARE NORMAL TO LONG DIRECTION OF HEADWALL.

DRAWING NOT TO SCALE. FOLLOW DIMENSIONS.

MINIMUM CLEARANCE TO REINFORCING STEEL SHALL BE 1½".

MISSOURI HIGHWAYS AND TRANSPORTATION COMMISSION
105 WEST CAPITOL
JEFFERSON CITY, MO 65102
1-888-ASK-MODOT (1-888-275-6636)

STATE OF MISSOURI
DENNIS W. HECKMAN
NUMBER PE-27141
PROFESSIONAL ENGINEER
THIS SHEET HAS BEEN SIGNED, SEALED AND DATED ELECTRONICALLY.

# CONCRETE TRIPLE BOX CULVERT

SKEW: LEFT ADVANCE
WINGS: FLARED

SECTIONS

| DATE EFFECTIVE: | 12/01/2011 | 703.83H | SHEET NO. 3 OF 3 |
|---|---|---|---|
| DATE PREPARED: | 9/29/2011 | | |

IF A SEAL IS PRESENT ON THIS SHEET IT HAS BEEN ELECTRONICALLY SEALED AND DATED.

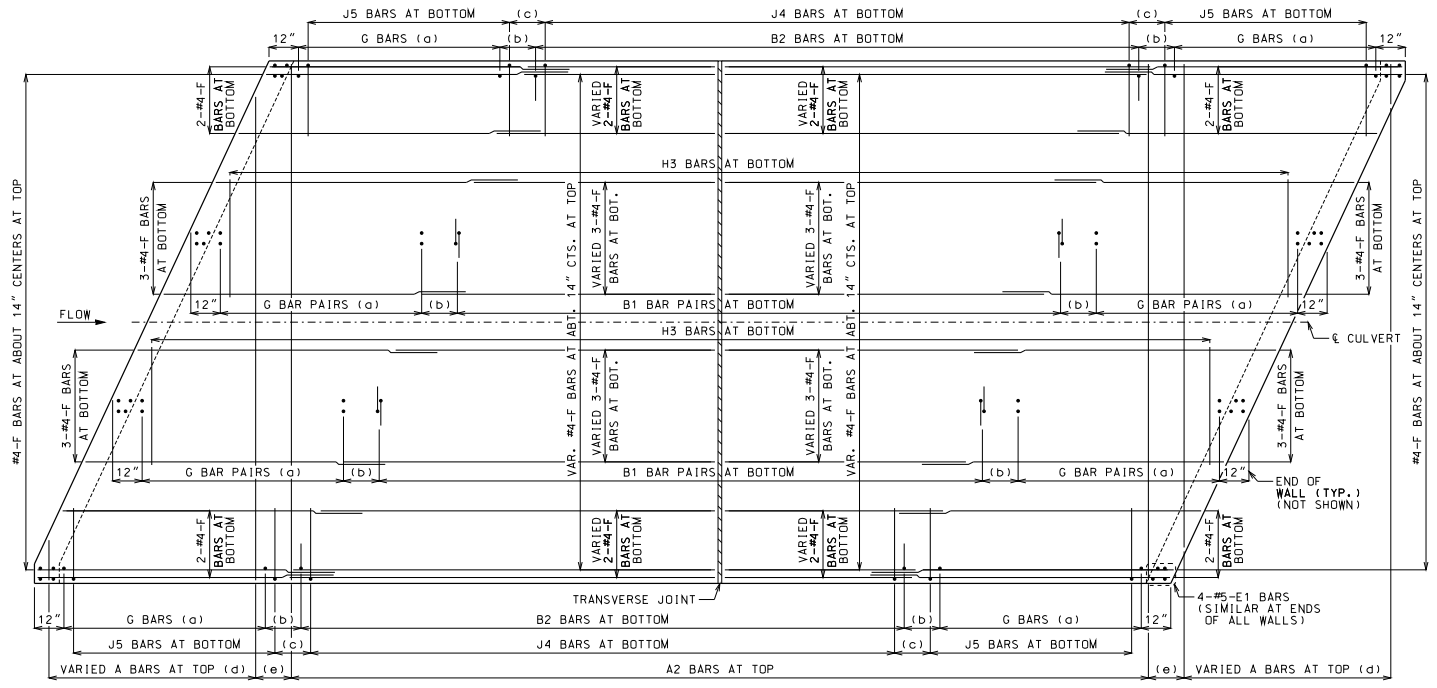


PLAN OF BOTTOM SLAB

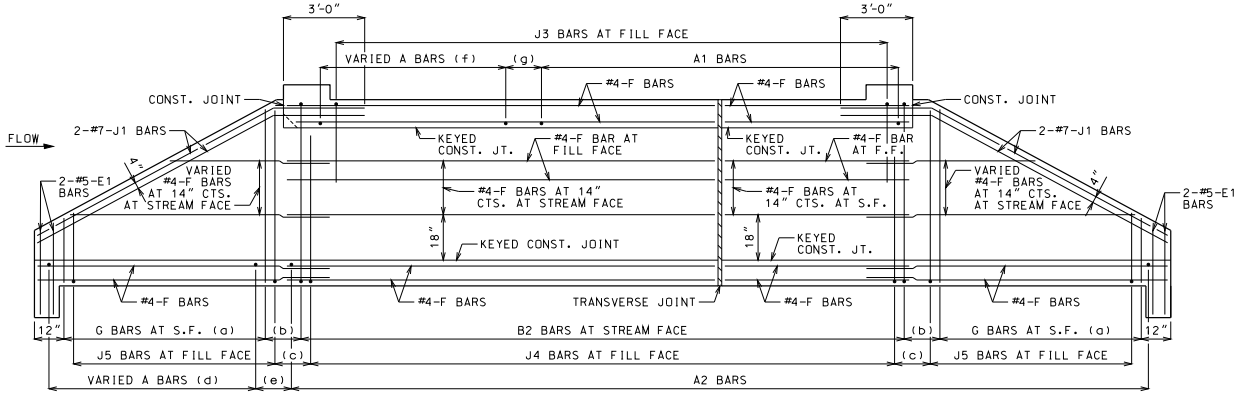


ELEVATION OF EXTERIOR WALL

J1 BARS MAY BE BENT IN FIELD OR SHOP.

## LAYING OUT TRANVERSE JOINTS

UNLESS SHOWN ON BRIDGE PLANS

USE A TRANSVERSE JOINT WHEN BARREL LENGTH IS OVER 80 FEET. USE ADDITIONAL JOINTS TO LIMIT CUT SECTION LENGTH AND END SECTION BARREL LENGTH MEASURED ALONG CENTERLINE OF CULVERT TO 50 FEET.

MINIMUM END SECTION LENGTH SHALL BE 3 FEET MEASURED ALONG THE SHORTEST WALL FROM THE INSIDE FACE OF HEADWALL TO THE TRANSVERSE JOINT.

TO AVOID LOCATING TRANSVERSE JOINTS UNDER A TRAVELED WAY WITH DESIGN FILLS 2 FEET OR LESS THE FOLLOWING SHALL APPLY:

BARREL LENGTH UP TO 90 FEET WITHOUT A TRANSVERSE JOINT

CUT SECTION LENGTHS UP TO 60 FEET

WHEN BARREL AND CUT SECTION LENGTH RESTRICTIONS REQUIRE TRANSVERSE JOINTS TO BE LOCATED UNDER A TRAVELED WAY WITH DESIGN FILLS 2 FEET OR LESS, THE JOINTS SHALL BE LOCATED TO MINIMIZE THE LENGTH OF JOINT UNDER THE TRAVELED WAY.

TRAVELED WAY IS THE ROADWAY WIDTH MINUS SHOULDER WIDTHS.

FOR CUT SECTION DETAILS, SEE 703.86.

## GENERAL NOTES:

FOR SECTIONS THRU BARREL, WINGS AND HEADWALLS, SEE SHEET 3 OF 3. FOR BAR SIZES, SPACING AND DIMENSIONS OF ALL REINFORCEMENT EXCEPT J5 BARS, SEE 703.87. FOR J5 BARS, SEE 703.37.

CONSTRUCTION JOINT KEY NOT SHOWN FOR CLARITY IN PLAN AND ELEVATION, SEE SHEET 3 OF 3 FOR DETAILS.

DRAWING NOT TO SCALE. FOLLOW DIMENSIONS.

MINIMUM CLEARANCE TO REINFORCING STEEL SHALL BE 1½".

LAP LONGITUDINAL BARS A MINIMUM OF 23" AT SPLICES.

BEVELED HEADWALL SHALL BE LOCATED AT UPSTREAM END.

(a) SAME SIZE AND SPACING AS ADJACENT B BARS

(b) VARIES, 12" MAXIMUM

(c) J4 BAR SPACING

(d) SAME SIZE AND SPACING AS A2 BARS

(e) A2 BAR SPACING

(f) SAME SIZE AND SPACING AS A1 BARS

(g) A1 BAR SPACING


MISSOURI HIGHWAYS AND TRANSPORTATION COMMISSION
105 WEST CAPITOL
JEFFERSON CITY, MO 65102
1-888-ASK-MODOT (1-888-275-6636)


STATE OF MISSOURI
DENNIS W. HECKMAN
NUMBER PE-27141
PROFESSIONAL ENGINEER
THIS SHEET HAS BEEN SIGNED, SEALED AND DATED ELECTRONICALLY.

# CONCRETE TRIPLE BOX CULVERT

SKEW: RIGHT ADVANCE
WINGS: STRAIGHT

REINFORCEMENT

| DATE EFFECTIVE: | 12/01/2011 | 703.84H | SHEET NO. 1 OF 3 |
|---|---|---|---|
| DATE PREPARED: | 9/29/2011 | | |

IF A SEAL IS PRESENT ON THIS SHEET IT HAS BEEN ELECTRONICALLY SEALED AND DATED.

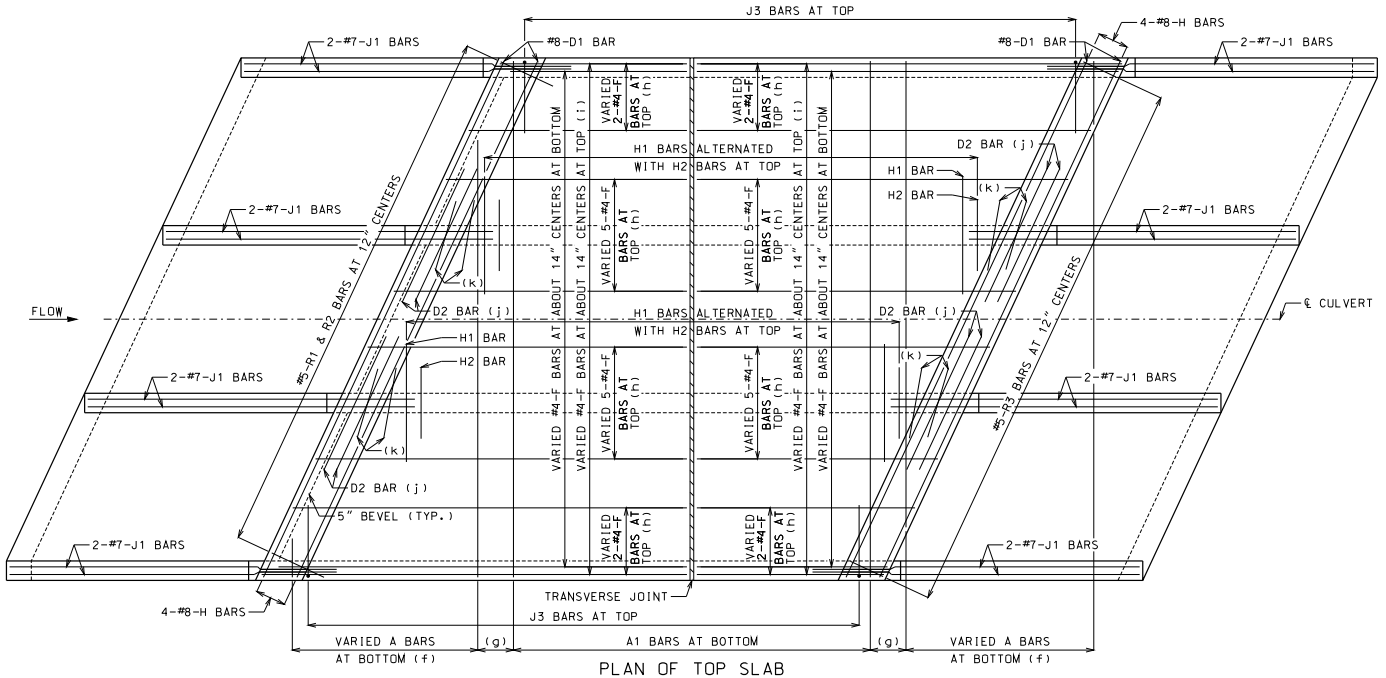


PLAN OF TOP SLAB

B BARS IN WALLS ARE NOT SHOWN FOR CLARITY.
FOR PLACEMENT, SEE SHEET 1 OF 3.

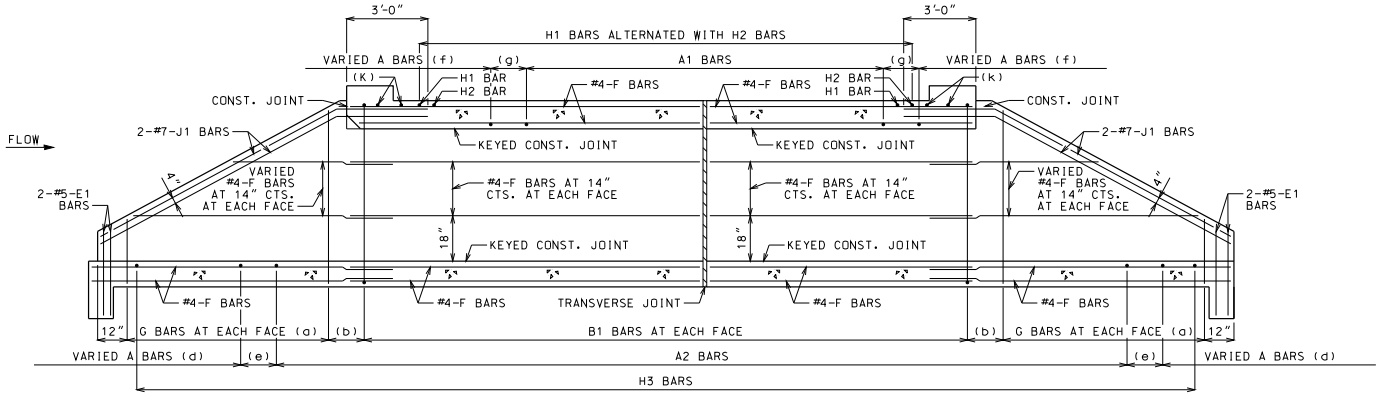


SECTION NEAR INTERIOR WALL

J1 BARS MAY BE BENT IN FIELD OR SHOP.

## GENERAL NOTES:

FOR SECTIONS THRU BARREL, WINGS AND HEADWALLS, SEE SHEET 3 OF 3. FOR BAR SIZES, SPACING AND DIMENSIONS OF ALL REINFORCEMENT EXCEPT J5 BARS, SEE 703.87. FOR J5 BARS, SEE 703.37.

CONSTRUCTION JOINT KEY NOT SHOWN FOR CLARITY IN PLAN AND SECTION, SEE SHEET 3 OF 3 FOR DETAILS.

DRAWING NOT TO SCALE. FOLLOW DIMENSIONS.

MINIMUM CLEARANCE TO REINFORCING STEEL SHALL BE 1½".

LAP LONGITUDINAL BARS A MINIMUM OF 23" AT SPLICES.

BEVELED HEADWALL SHALL BE LOCATED AT UPSTREAM END.

(a) SAME SIZE AND SPACING AS ADJACENT B BARS

(b) VARIES, 12" MAXIMUM

(c) NOT SPECIFIED ON THIS SHEET

(d) SAME SIZE AND SPACING AS A2 BARS

(e) A2 BAR SPACING

(f) SAME SIZE AND SPACING AS A1 BARS

(g) A1 BAR SPACING

(h) FOR DESIGN FILLS OVER 2'-0"

(i) FOR DESIGN FILLS 2'-0" OR LESS

(j) NOT REQUIRED FOR CLEAR SPANS ≤ 10'-0"
#8 FOR CLEAR SPAN > 10'-0"
#9 FOR CLEAR SPAN > 13'-0"

IF REQUIRED, THE MINIMUM LENGTH EACH SIDE OF ℄ WALL SHALL BE THE GREATER OF 48 BAR DIAMETERS OR ¼ CLEAR SPAN. THE CLEAR SPAN IS PARALLEL TO LONG DIRECTION OF HEADWALL.

(k) H2 BARS AS REQUIRED, QUANTITY OF BARS VARIES WITH SKEW.

MISSOURI HIGHWAYS AND TRANSPORTATION COMMISSION
105 WEST CAPITOL
JEFFERSON CITY, MO 65102
1-888-ASK-MODOT (1-888-275-6636)

STATE OF MISSOURI
DENNIS W. HECKMAN
NUMBER PE-27141
PROFESSIONAL ENGINEER
THIS SHEET HAS BEEN SIGNED, SEALED AND DATED ELECTRONICALLY.

# CONCRETE TRIPLE BOX CULVERT

SKEW: RIGHT ADVANCE
WINGS: STRAIGHT

REINFORCEMENT

DATE EFFECTIVE: 12/01/2011
DATE PREPARED: 9/29/2011

703.84H

SHEET NO. 2 OF 3

IF A SEAL IS PRESENT ON THIS SHEET IT HAS BEEN ELECTRONICALLY SEALED AND DATED.

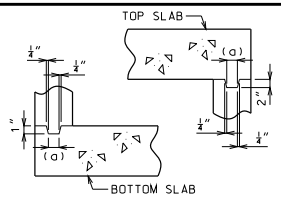


KEYED CONSTRUCTION JOINT

(a) APPROXIMATELY ONE-THIRD OF WALL THICKNESS

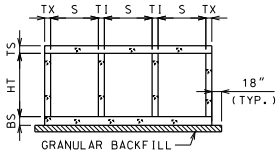


GRANULAR BACKFILL LIMITS AND MEMBER DIMENSIONS

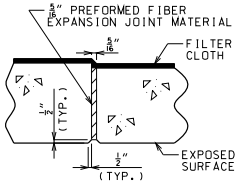


TRANSVERSE JOINT THRU BARREL

PREFORMED FIBER EXPANSION JOINT MATERIAL SHALL BE SECURELY STITCHED TO ONE FACE OF THE CONCRETE WITH NO. 10 GAGE COPPER WIRE OR NO. 12 GAGE SOFT DRAWN GALVANIZED STEEL WIRE.

FILTER CLOTH 3 FEET IN WIDTH AND DOUBLE THICKNESS SHALL BE CENTERED ON TRANSVERSE JOINTS IN TOP SLAB AND SIDEWALLS WITH EDGES SEALED WITH MASTIC OR TWO SIDED TAPE. FILTER CLOTH SHALL BE A SUBSURFACE DRAINAGE GEOTEXTILE IN ACCORDANCE WITH SECTION 1011 OF THE STANDARD SPECIFICATIONS FOR HIGHWAY CONSTRUCTION. COST OF FURNISHING AND INSTALLING FILTER CLOTH WILL BE CONSIDERED COMPLETELY COVERED BY THE CONTRACT UNIT PRICE FOR OTHER ITEMS.

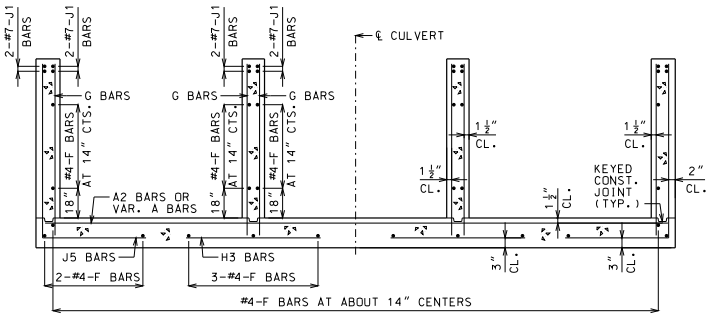


UPSTREAM AND DOWNSTREAM WINGS REINFORCEMENT

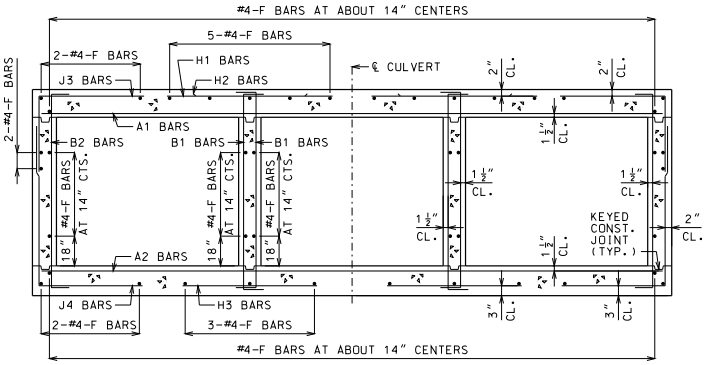


BARREL REINFORCEMENT

FOR DESIGN FILLS OVER 2'-0"

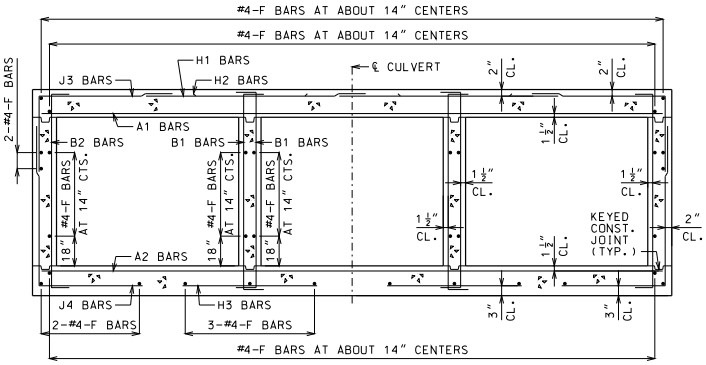


BARREL REINFORCEMENT

FOR DESIGN FILLS 2'-0" OR LESS

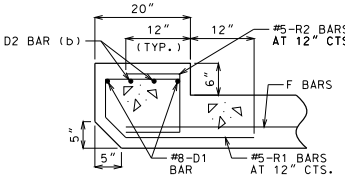


UPSTREAM HEADWALL REINFORCEMENT

NEAR INTERIOR WALL

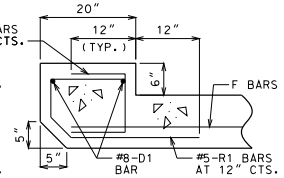


UPSTREAM HEADWALL REINFORCEMENT

NEAR MIDSPAN

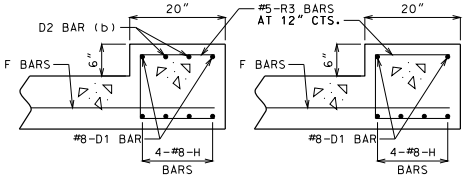


DOWNSTREAM HEADWALL REINFORCEMENT

NEAR INTERIOR WALL




DOWNSTREAM HEADWALL REINFORCEMENT

NEAR MIDSPAN

(b) NOT REQUIRED FOR CLEAR SPANS ≤ 10'-0"
#8 FOR CLEAR SPAN > 10'-0"
#9 FOR CLEAR SPAN > 13'-0"

IF D2 BARS ARE REQUIRED, THE MINIMUM LENGTH EACH SIDE OF ℄ WALL SHALL BE THE GREATER OF 48 BAR DIAMETERS OR ¼ CLEAR SPAN. THE CLEAR SPAN IS PARALLEL TO LONG DIRECTION OF HEADWALL.

GENERAL NOTES:

FOR MEMBER THICKNESS AND FOR BAR SIZES, SPACING AND DIMENSIONS OF ALL REINFORCEMENT EXCEPT J5 BARS, SEE 703.87. FOR J5 BARS, SEE 703.37.

BARREL AND WINGS SECTIONS ARE SYMMETRICAL ABOUT AND NORMAL TO ℄ CULVERT. HEADWALL SECTIONS ARE NORMAL TO LONG DIRECTION OF HEADWALL.

DRAWING NOT TO SCALE. FOLLOW DIMENSIONS.

MINIMUM CLEARANCE TO REINFORCING STEEL SHALL BE 1½".

MISSOURI HIGHWAYS AND TRANSPORTATION COMMISSION
105 WEST CAPITOL
JEFFERSON CITY, MO 65102
1-888-ASK-MODOT (1-888-275-6636)

STATE OF MISSOURI
DENNIS W. HECKMAN
NUMBER PE-27141
PROFESSIONAL ENGINEER
THIS SHEET HAS BEEN SIGNED, SEALED AND DATED ELECTRONICALLY.

# CONCRETE TRIPLE BOX CULVERT

SKEW: RIGHT ADVANCE
WINGS: STRAIGHT

SECTIONS

| DATE EFFECTIVE: | 12/01/2011 | 703.84H | SHEET NO. 3 OF 3 |
|---|---|---|---|
| DATE PREPARED: | 9/29/2011 | | |

IF A SEAL IS PRESENT ON THIS SHEET IT HAS BEEN ELECTRONICALLY SEALED AND DATED.

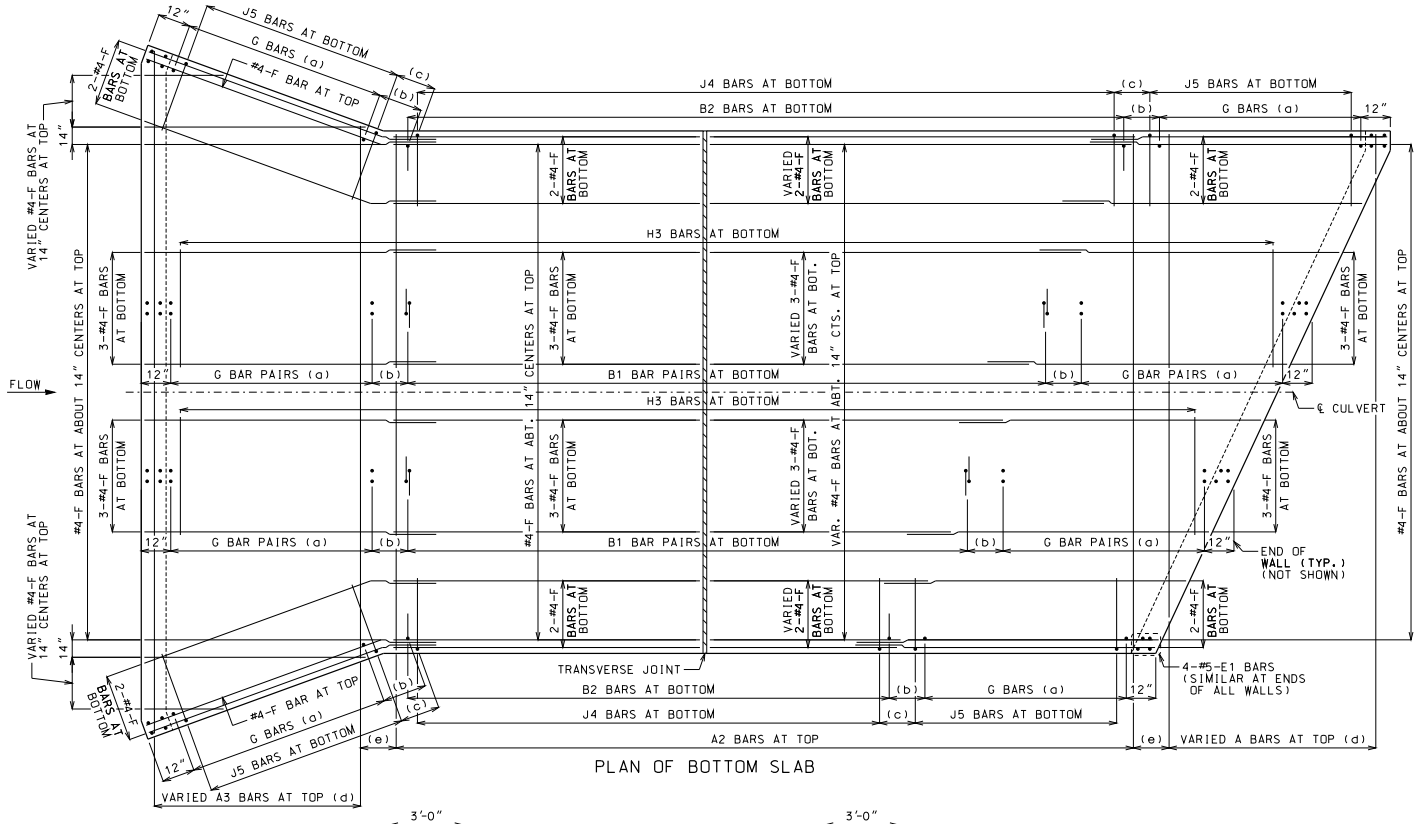


PLAN OF BOTTOM SLAB

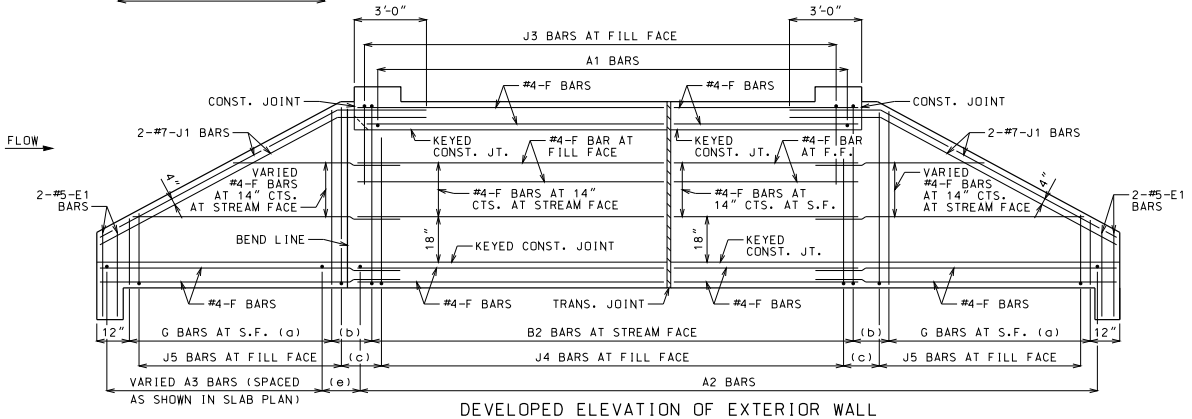


DEVELOPED ELEVATION OF EXTERIOR WALL

J1 BARS MAY BE BENT IN FIELD OR SHOP.

## LAYING OUT TRANVERSE JOINTS

UNLESS SHOWN ON BRIDGE PLANS

USE A TRANSVERSE JOINT WHEN BARREL LENGTH IS OVER 80 FEET. USE ADDITIONAL JOINTS TO LIMIT CUT SECTION LENGTH AND END SECTION BARREL LENGTH MEASURED ALONG CENTERLINE OF CULVERT TO 50 FEET.

MINIMUM END SECTION LENGTH SHALL BE 3 FEET MEASURED ALONG THE SHORTEST WALL FROM THE INSIDE FACE OF HEADWALL TO THE TRANSVERSE JOINT.

TO AVOID LOCATING TRANSVERSE JOINTS UNDER A TRAVELED WAY WITH DESIGN FILLS 2 FEET OR LESS THE FOLLOWING SHALL APPLY:

BARREL LENGTH UP TO 90 FEET WITHOUT A TRANSVERSE JOINT

CUT SECTION LENGTHS UP TO 60 FEET

WHEN BARREL AND CUT SECTION LENGTH RESTRICTIONS REQUIRE TRANSVERSE JOINTS TO BE LOCATED UNDER A TRAVELED WAY WITH DESIGN FILLS 2 FEET OR LESS, THE JOINTS SHALL BE LOCATED TO MINIMIZE THE LENGTH OF JOINT UNDER THE TRAVELED WAY.

TRAVELED WAY IS THE ROADWAY WIDTH MINUS SHOULDER WIDTHS.

FOR CUT SECTION DETAILS, SEE 703.86.

## GENERAL NOTES:

FOR SECTIONS THRU BARREL, WINGS AND HEADWALLS, SEE SHEET 3 OF 3. FOR BAR SIZES, SPACING AND DIMENSIONS OF ALL REINFORCEMENT EXCEPT J5 BARS, SEE 703.87. FOR J5 BARS, SEE 703.37.

CONSTRUCTION JOINT KEY NOT SHOWN FOR CLARITY IN PLAN AND ELEVATION, SEE SHEET 3 OF 3 FOR DETAILS.

DRAWING NOT TO SCALE. FOLLOW DIMENSIONS.

MINIMUM CLEARANCE TO REINFORCING STEEL SHALL BE 1½".

LAP LONGITUDINAL BARS A MINIMUM OF 23" AT SPLICES.

BEVELED HEADWALL SHALL BE LOCATED AT UPSTREAM END.

(a) SAME SIZE AND SPACING AS ADJACENT B BARS

(b) VARIES, 12" MAXIMUM

(c) J4 BAR SPACING

(d) SAME SIZE AND SPACING AS A2 BARS

(e) A2 BAR SPACING

MISSOURI HIGHWAYS AND TRANSPORTATION COMMISSION
105 WEST CAPITOL
JEFFERSON CITY, MO 65102
1-888-ASK-MODOT (1-888-275-6636)

STATE OF MISSOURI
DENNIS W. HECKMANN
NUMBER PE-27141
PROFESSIONAL ENGINEER
THIS SHEET HAS BEEN SIGNED, SEALED AND DATED ELECTRONICALLY.

# CONCRETE TRIPLE BOX CULVERT

SKEW: RIGHT ADVANCE
WINGS: FLARED

REINFORCEMENT

| DATE EFFECTIVE: | 12/01/2011 | 703.85C | SHEET NO. 1 OF 3 |
|---|---|---|---|
| DATE PREPARED: | 9/29/2011 | | |

IF A SEAL IS PRESENT ON THIS SHEET IT HAS BEEN ELECTRONICALLY SEALED AND DATED.

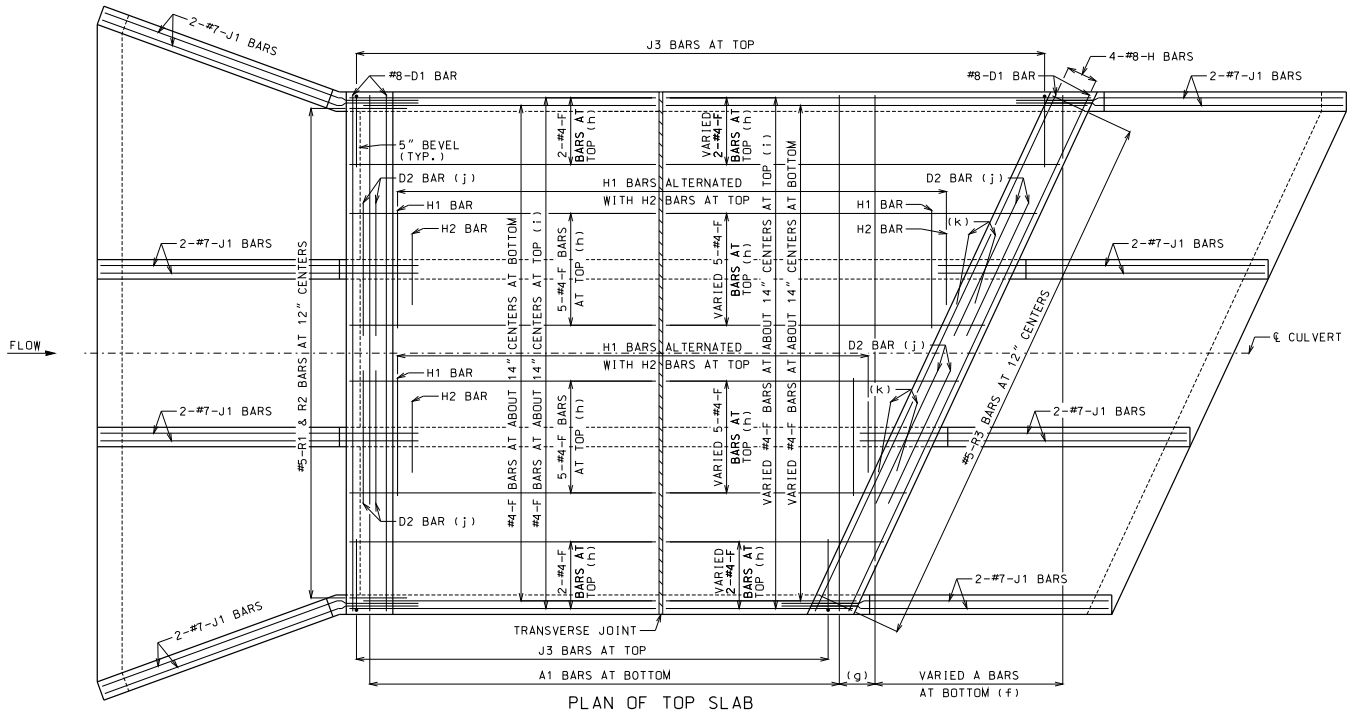


PLAN OF TOP SLAB

B BARS IN WALLS ARE NOT SHOWN FOR CLARITY.
FOR PLACEMENT, SEE SHEET 1 OF 3.

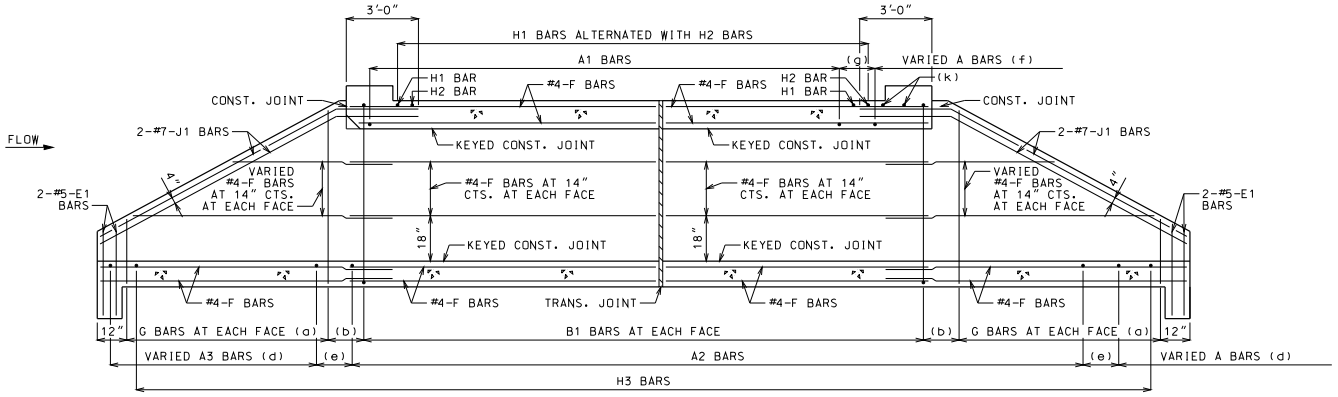


SECTION NEAR INTERIOR WALL

J1 BARS MAY BE BENT IN FIELD OR SHOP.

## GENERAL NOTES:

FOR SECTIONS THRU BARREL, WINGS AND HEADWALLS, SEE SHEET 3 OF 3. FOR BAR SIZES, SPACING AND DIMENSIONS OF ALL REINFORCEMENT EXCEPT J5 BARS, SEE 703.87. FOR J5 BARS, SEE 703.37.

CONSTRUCTION JOINT KEY NOT SHOWN FOR CLARITY IN PLAN AND SECTION, SEE SHEET 3 OF 3 FOR DETAILS.

DRAWING NOT TO SCALE. FOLLOW DIMENSIONS.

MINIMUM CLEARANCE TO REINFORCING STEEL SHALL BE 1½".

LAP LONGITUDINAL BARS A MINIMUM OF 23" AT SPLICES.

BEVELED HEADWALL SHALL BE LOCATED AT UPSTREAM END.

(a) SAME SIZE AND SPACING AS ADJACENT B BARS

(b) VARIES, 12" MAXIMUM

(c) NOT SPECIFIED ON THIS SHEET

(d) SAME SIZE AND SPACING AS A2 BARS

(e) A2 BAR SPACING

(f) SAME SIZE AND SPACING AS A1 BARS

(g) A1 BAR SPACING

(h) FOR DESIGN FILLS OVER 2'-0"

(i) FOR DESIGN FILLS 2'-0" OR LESS

(j) NOT REQUIRED FOR CLEAR SPANS ≤ 10'-0"
#8 FOR CLEAR SPAN > 10'-0"
#9 FOR CLEAR SPAN > 13'-0"

IF REQUIRED, THE MINIMUM LENGTH EACH SIDE OF ℄ WALL SHALL BE THE GREATER OF 48 BAR DIAMETERS OR ¼ CLEAR SPAN. THE CLEAR SPAN IS PARALLEL TO LONG DIRECTION OF HEADWALL.

(k) H2 BARS AS REQUIRED, QUANTITY OF BARS VARIES WITH SKEW.

IF A SEAL IS PRESENT ON THIS SHEET IT HAS BEEN ELECTRONICALLY SEALED AND DATED.


MISSOURI HIGHWAYS AND TRANSPORTATION COMMISSION
105 WEST CAPITOL
JEFFERSON CITY, MO 65102
1-888-ASK-MODOT (1-888-275-6636)


STATE OF MISSOURI
DENNIS W. HECKMANN
NUMBER PE-27141
PROFESSIONAL ENGINEER
THIS SHEET HAS BEEN SIGNED, SEALED AND DATED ELECTRONICALLY.

# CONCRETE TRIPLE BOX CULVERT

SKEW: RIGHT ADVANCE
WINGS: FLARED

REINFORCEMENT

| DATE EFFECTIVE: | 12/01/2011 | 703.85C | SHEET NO. 2 OF 3 |
|---|---|---|---|
| DATE PREPARED: | 9/29/2011 | | |

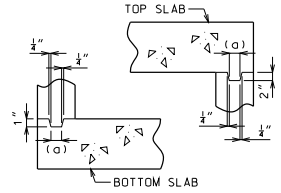


KEYED CONSTRUCTION JOINT

(a) APPROXIMATELY ONE-THIRD OF WALL THICKNESS

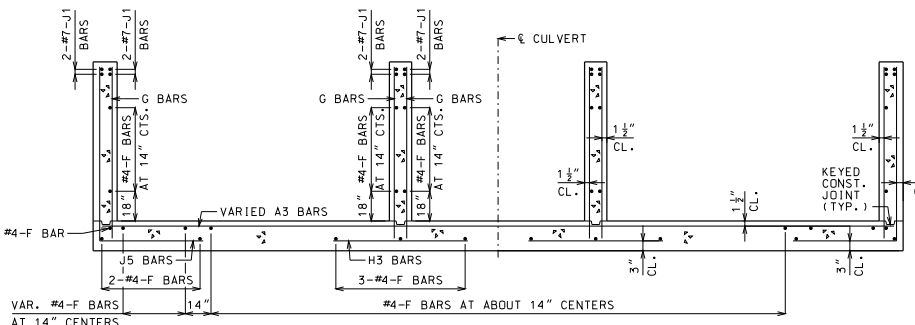


UPSTREAM FLARED WINGS REINFORCEMENT

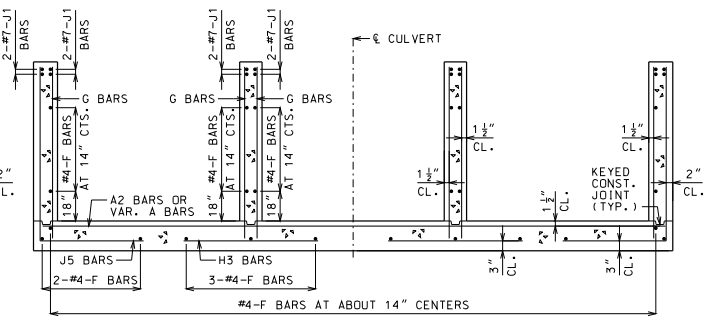


DOWNSTREAM WINGS REINFORCEMENT

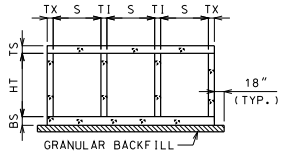


GRANULAR BACKFILL LIMITS AND MEMBER DIMENSIONS

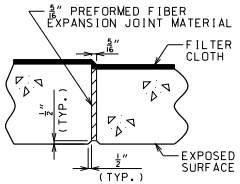


TRANSVERSE JOINT THRU BARREL

PREFORMED FIBER EXPANSION JOINT MATERIAL SHALL BE SECURELY STITCHED TO ONE FACE OF THE CONCRETE WITH NO. 10 GAGE COPPER WIRE OR NO. 12 GAGE SOFT DRAWN GALVANIZED STEEL WIRE.

FILTER CLOTH 3 FEET IN WIDTH AND DOUBLE THICKNESS SHALL BE CENTERED ON TRANSVERSE JOINTS IN TOP SLAB AND SIDEWALLS WITH EDGES SEALED WITH MASTIC OR TWO SIDED TAPE. FILTER CLOTH SHALL BE A SUBSURFACE DRAINAGE GEOTEXTILE IN ACCORDANCE WITH SECTION 1011 OF THE STANDARD SPECIFICATIONS FOR HIGHWAY CONSTRUCTION. COST OF FURNISHING AND INSTALLING FILTER CLOTH WILL BE CONSIDERED COMPLETELY COVERED BY THE CONTRACT UNIT PRICE FOR OTHER ITEMS.

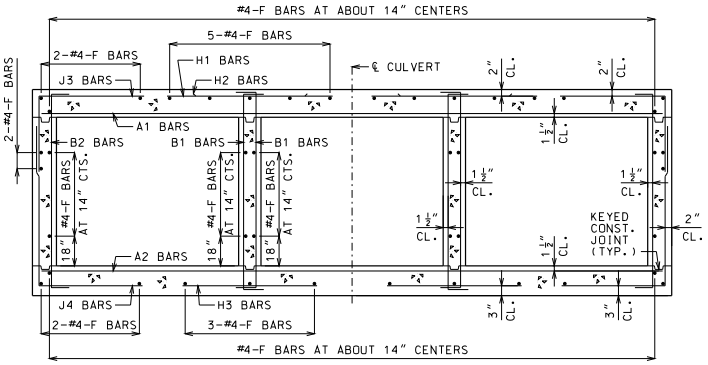


BARREL REINFORCEMENT

FOR DESIGN FILLS OVER 2'-0"

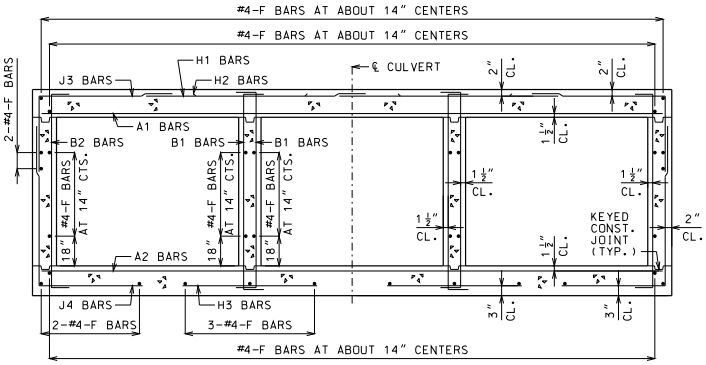


BARREL REINFORCEMENT

FOR DESIGN FILLS 2'-0" OR LESS

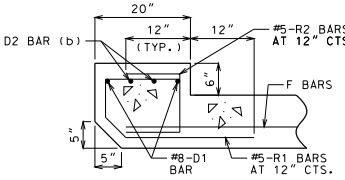


UPSTREAM HEADWALL REINFORCEMENT

NEAR INTERIOR WALL

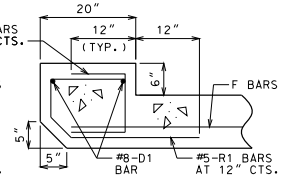


UPSTREAM HEADWALL REINFORCEMENT

NEAR MIDSPAN

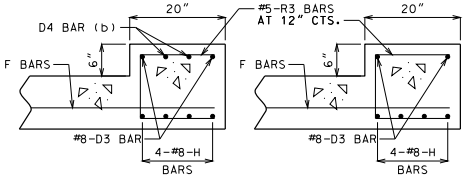


DOWNSTREAM HEADWALL REINFORCEMENT

NEAR INTERIOR WALL




DOWNSTREAM HEADWALL REINFORCEMENT

NEAR MIDSPAN

(b) NOT REQUIRED FOR CLEAR SPANS ≤ 10'-0"
#8 FOR CLEAR SPAN > 10'-0"
#9 FOR CLEAR SPAN > 13'-0"

IF D2 AND D4 BARS ARE REQUIRED, THE MINIMUM LENGTH EACH SIDE OF ℄ WALL SHALL BE THE GREATER OF 48 BAR DIAMETERS OR ¼ CLEAR SPAN. THE CLEAR SPAN IS PARALLEL TO LONG DIRECTION OF HEADWALL.

GENERAL NOTES:

FOR MEMBER THICKNESS AND FOR BAR SIZES, SPACING AND DIMENSIONS OF ALL REINFORCEMENT EXCEPT J5 BARS, SEE 703.87. FOR J5 BARS, SEE 703.37.

BARREL AND WINGS SECTIONS ARE SYMMETRICAL ABOUT AND NORMAL TO ℄ CULVERT. HEADWALL SECTIONS ARE NORMAL TO LONG DIRECTION OF HEADWALL.

DRAWING NOT TO SCALE. FOLLOW DIMENSIONS.

MINIMUM CLEARANCE TO REINFORCING STEEL SHALL BE 1½".

MISSOURI HIGHWAYS AND TRANSPORTATION COMMISSION
105 WEST CAPITOL
JEFFERSON CITY, MO 65102
1-888-ASK-MODOT (1-888-275-6636)

STATE OF MISSOURI
DENNIS W. HECKMAN
NUMBER PE-27141
PROFESSIONAL ENGINEER
THIS SHEET HAS BEEN SIGNED, SEALED AND DATED ELECTRONICALLY.

# CONCRETE TRIPLE BOX CULVERT

SKEW: RIGHT ADVANCE
WINGS: FLARED

SECTIONS

| DATE EFFECTIVE: | 12/01/2011 | 703.85C | SHEET NO. 3 OF 3 |
|---|---|---|---|
| DATE PREPARED: | 9/29/2011 | | |

IF A SEAL IS PRESENT ON THIS SHEET IT HAS BEEN ELECTRONICALLY SEALED AND DATED.

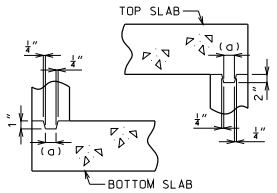


KEYED CONSTRUCTION JOINT

(a) APPROXIMATELY ONE-THIRD OF WALL THICKNESS

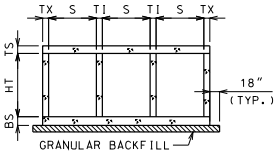


GRANULAR BACKFILL LIMITS AND MEMBER DIMENSIONS

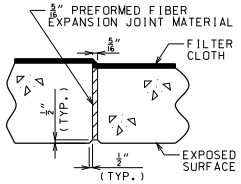


TRANSVERSE JOINT THRU BARREL

PREFORMED FIBER EXPANSION JOINT MATERIAL SHALL BE SECURELY STITCHED TO ONE FACE OF THE CONCRETE WITH NO. 10 GAGE COPPER WIRE OR NO. 12 GAGE SOFT DRAWN GALVANIZED STEEL WIRE.

FILTER CLOTH 3 FEET IN WIDTH AND DOUBLE THICKNESS SHALL BE CENTERED ON TRANSVERSE JOINTS IN TOP SLAB AND SIDEWALLS WITH EDGES SEALED WITH MASTIC OR TWO SIDED TAPE. FILTER CLOTH SHALL BE A SUBSURFACE DRAINAGE GEOTEXTILE IN ACCORDANCE WITH SECTION 1011 OF THE STANDARD SPECIFICATIONS FOR HIGHWAY CONSTRUCTION. COST OF FURNISHING AND INSTALLING FILTER CLOTH WILL BE CONSIDERED COMPLETELY COVERED BY THE CONTRACT UNIT PRICE FOR OTHER ITEMS.

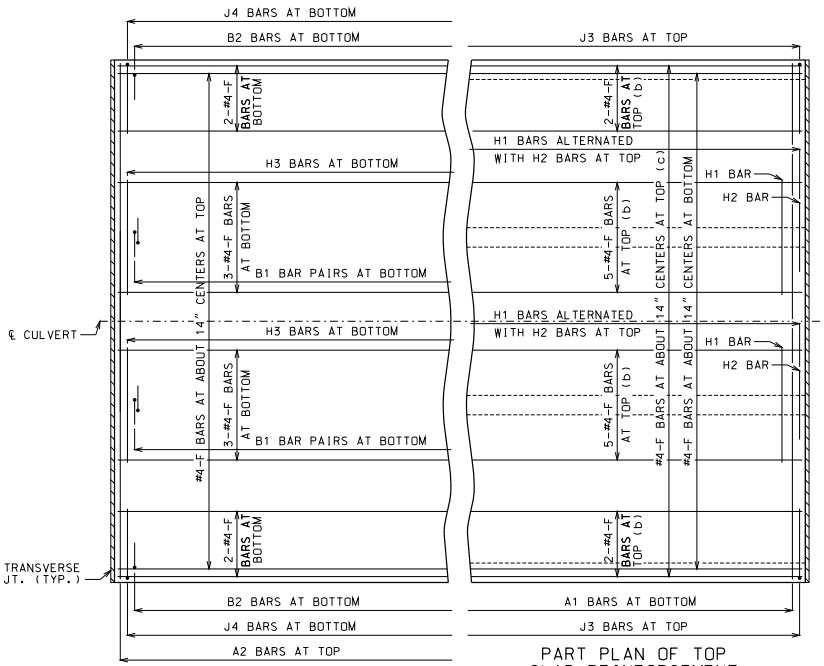


PART PLAN OF BOTTOM SLAB REINFORCEMENT

PART PLAN OF TOP SLAB REINFORCEMENT

(b) FOR DESIGN FILLS OVER 2'-0"
(c) FOR DESIGN FILLS 2'-0" OR LESS

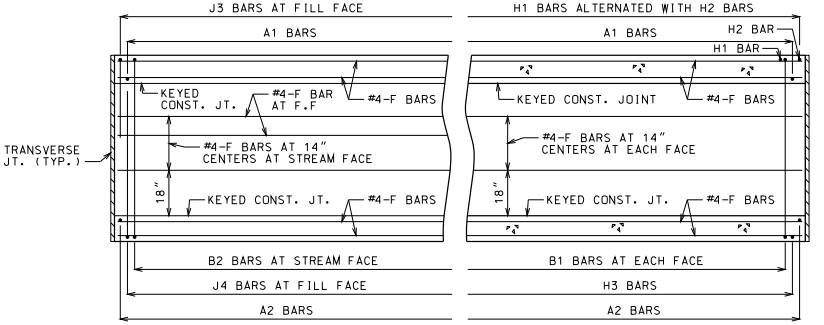


PART ELEVATION OF EXTERIOR WALL REINFORCEMENT

PART SECTION NEAR INTERIOR WALL REINFORCEMENT

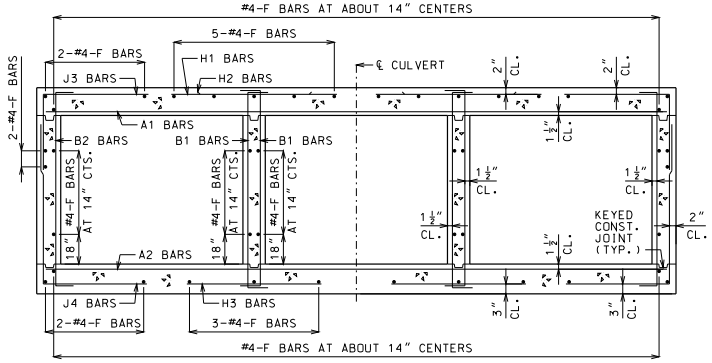


BARREL REINFORCEMENT

FOR DESIGN FILLS OVER 2'-0"
SYMMETRICAL ABOUT AND NORMAL TO ℄ CULVERT.

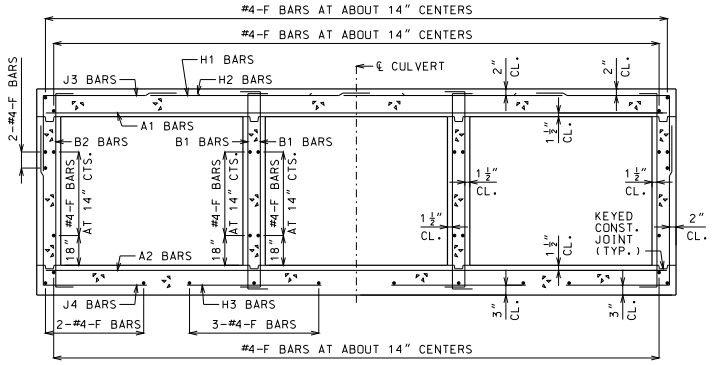


BARREL REINFORCEMENT

FOR DESIGN FILLS 2'-0" OR LESS
SYMMETRICAL ABOUT AND NORMAL TO ℄ CULVERT.

## GENERAL NOTES

DESIGN SPECIFICATIONS: 2010 AASHTO LRFD BRIDGE DESIGN SPECFICATIONS AND 2010 INTERIM REVISIONS

DESIGN UNIT STRESSES: CLASS B-1 CONCRETE f'c = 4,000 PSI
REINFORCING STEEL (GRADE 60) fy = 60,000 PSI

DESIGN LOADS: VEHICULAR = HL-93 MINUS LANE LOAD
EARTH = 120 LB/FT³
EQUIVALENT FLUID PRESSURE = 30 LB/FT³ (MIN.) - 60 LB/FT³ (MAX.)

FOR MEMBER THICKNESS AND FOR BAR SIZES, SPACING AND DIMENSIONS, SEE 703.87.

CONSTRUCTION JOINT KEY NOT SHOWN FOR CLARITY IN PART PLANS, PART ELEVATION AND PART SECTION.

DRAWING NOT TO SCALE. FOLLOW DIMENSIONS.

MINIMUM CLEARANCE TO REINFORCING STEEL SHALL BE 1½".

IF A SEAL IS PRESENT ON THIS SHEET IT HAS BEEN ELECTRONICALLY SEALED AND DATED.

MISSOURI HIGHWAYS AND TRANSPORTATION COMMISSION
105 WEST CAPITOL
JEFFERSON CITY, MO 65102
1-888-ASK-MODOT (1-888-275-6636)

STATE OF MISSOURI
DENNIS W. HECKMAN
NUMBER PE-27141
PROFESSIONAL ENGINEER
THIS SHEET HAS BEEN SIGNED, SEALED AND DATED ELECTRONICALLY.

# CONCRETE TRIPLE BOX CULVERT

CUT SECTION

DATE EFFECTIVE: 12/01/2011
DATE PREPARED: 9/29/2011

703.86

SHEET NO. 1 OF 1

SPAN (S) = 3 FT  HEIGHT (HT) = 2 FT OR 3 FT OR 4 FT

| DESIGN FILL | MEMBER THICKNESS | | | | TOP SLAB BARS | | | | | | | | | | | | | | BOTTOM SLAB BARS | | | | | | | | | | | | WALL BARS | | | | |
|---|---|---|---|---|---|---|---|---|---|---|---|---|---|---|---|---|---|---|---|---|---|---|---|---|---|---|---|---|---|---|---|---|---|---|---|
| | | | | | A1 BARS | | J3 BARS | | | | | H1 BARS | | | | H2 BARS | | | | A2 BARS | | J4 BARS | | | | | H3 BARS | | | | B1 BARS | | B2 BARS | | |
| | | | | | | | | | | K2 | | | | | | | | | | | | | K3 | | | | | | | | | | |
| | TS | BS | TX | TI | SIZE | SPA. | SIZE | SPA. | C1 | HT=2′ | HT=3′ | HT=4′ | SIZE | SPA. | C5 | Q8 | SIZE | SPA. | C6 | Q9 | SIZE | SPA. | SIZE | SPA. | C4 | HT=2′ | HT=3′ | HT=4′ | SIZE | SPA. | C7 | Q10 | SIZE | SPA. | SIZE | SPA. | G1 |
| 1 FT | 10 | 8 | 8 | 8 | 4 | 8.5 | 4 | 10.5 | 26.8 | 26.0 | 26.0 | 26.0 | 4 | 24 | 39.5 | 30.5 | 4 | 24 | 20.0 | 20.0 | 4 | 12 | 4 | 12 | 36.0 | 28 | 40 | 52 | 4 | 12 | 25.0 | 25.0 | 5 | 12 | 5 | 12 | 12 |
| 2 FT | 10 | 8 | 8 | 8 | 4 | 8.5 | 4 | 10.5 | 26.8 | 26.0 | 26.0 | 26.0 | 4 | 24 | 39.5 | 30.5 | 4 | 24 | 20.0 | 20.0 | 4 | 12 | 4 | 12 | 35.0 | 28 | 40 | 52 | 4 | 12 | 24.0 | 24.0 | 5 | 12 | 5 | 12 | 12 |
| 4 FT | 8 | 8 | 8 | 8 | 4 | 12 | 4 | 12 | 26.8 | 24.0 | 24.0 | 24.0 | 4 | 24 | 39.5 | 34.0 | 4 | 24 | 19.0 | 19.0 | 4 | 12 | 4 | 12 | 31.1 | 28 | 40 | 52 | 4 | 12 | 23.0 | 24.0 | 5 | 12 | 5 | 12 | 12 |
| 6 FT | 8 | 8 | 8 | 8 | 4 | 12 | 4 | 12 | 31.1 | 24.0 | 24.0 | 24.0 | 4 | 24 | 26.0 | 26.0 | 4 | 24 | 18.0 | 18.0 | 4 | 12 | 4 | 12 | 28.9 | 28 | 40 | 52 | 4 | 12 | 22.0 | 23.0 | 5 | 12 | 5 | 12 | 12 |
| 8 FT | 8 | 8 | 8 | 8 | 4 | 12 | 4 | 12 | 28.5 | 24.0 | 24.0 | 24.0 | 4 | 24 | 24.0 | 24.0 | 4 | 24 | 18.0 | 18.0 | 4 | 12 | 4 | 12 | 27.3 | 28 | 40 | 52 | 4 | 12 | 22.0 | 23.0 | 5 | 12 | 5 | 12 | 0 |
| 10 FT | 8 | 8 | 8 | 8 | 4 | 12 | 4 | 12 | 27.1 | 24.0 | 24.0 | 24.0 | 4 | 24 | 23.0 | 24.0 | 4 | 24 | 18.0 | 18.0 | 4 | 12 | 4 | 12 | 26.5 | 28 | 40 | 52 | 4 | 12 | 22.0 | 23.0 | 5 | 12 | 5 | 12 | 0 |
| 12 FT | 8 | 8 | 8 | 8 | 4 | 12 | 4 | 12 | 25.0 | 24.0 | 24.0 | 24.0 | 4 | 24 | 21.0 | 23.0 | 4 | 24 | 18.0 | 18.0 | 4 | 12 | 4 | 12 | 24.5 | 28 | 40 | 52 | 4 | 12 | 22.0 | 23.0 | 5 | 12 | 5 | 12 | 0 |
| 14 FT | 8 | 8 | 8 | 8 | 4 | 12 | 4 | 12 | 24.9 | 24.0 | 24.0 | 24.0 | 4 | 24 | 21.0 | 23.0 | 4 | 24 | 18.0 | 18.0 | 4 | 12 | 4 | 12 | 24.5 | 28 | 40 | 52 | 4 | 12 | 22.0 | 23.0 | 5 | 12 | 5 | 12 | 0 |
| 16 FT | 8 | 8 | 8 | 8 | 4 | 12 | 4 | 12 | 24.8 | 24.0 | 24.0 | 24.0 | 4 | 24 | 21.0 | 22.0 | 4 | 24 | 18.0 | 18.0 | 4 | 12 | 4 | 12 | 24.4 | 28 | 40 | 52 | 4 | 11.5 | 22.0 | 23.0 | 5 | 12 | 5 | 12 | 0 |
| 18 FT | 8 | 8 | 8 | 8 | 4 | 12 | 4 | 12 | 24.8 | 24.0 | 24.0 | 24.0 | 4 | 24 | 21.0 | 22.0 | 4 | 24 | 18.0 | 18.0 | 4 | 12 | 4 | 12 | 24.4 | 28 | 40 | 52 | 4 | 11 | 22.0 | 23.0 | 5 | 12 | 5 | 12 | 0 |
| 20 FT | 8 | 8 | 8 | 8 | 4 | 12 | 4 | 12 | 24.6 | 24.0 | 24.0 | 24.0 | 4 | 24 | 21.0 | 22.0 | 4 | 24 | 18.0 | 18.0 | 4 | 12 | 4 | 12 | 24.3 | 28 | 40 | 52 | 4 | 10.5 | 22.0 | 23.0 | 5 | 12 | 5 | 12 | 0 |
| 22 FT | 8 | 8 | 8 | 8 | 4 | 12 | 4 | 12 | 24.6 | 24.0 | 24.0 | 24.0 | 4 | 24 | 21.0 | 22.0 | 4 | 24 | 18.0 | 18.0 | 4 | 12 | 4 | 12 | 24.3 | 28 | 40 | 52 | 4 | 9.5 | 22.0 | 23.0 | 5 | 12 | 5 | 12 | 0 |
| 24 FT | 8 | 8 | 8 | 8 | 4 | 12 | 4 | 12 | 24.5 | 24.0 | 24.0 | 24.0 | 4 | 24 | 21.0 | 22.0 | 4 | 24 | 18.0 | 18.0 | 4 | 11.5 | 4 | 12 | 24.3 | 28 | 40 | 52 | 4 | 9 | 22.0 | 23.0 | 5 | 12 | 5 | 12 | 0 |
| 26 FT | 8 | 8 | 8 | 8 | 4 | 12 | 4 | 12 | 24.5 | 24.0 | 24.0 | 24.0 | 4 | 24 | 21.0 | 22.0 | 4 | 24 | 18.0 | 18.0 | 4 | 10.5 | 4 | 11 | 24.1 | 28 | 40 | 52 | 4 | 9 | 22.0 | 23.0 | 5 | 12 | 5 | 12 | 0 |
| 28 FT | 8 | 8 | 8 | 8 | 4 | 12 | 4 | 11 | 24.5 | 24.0 | 24.0 | 24.0 | 4 | 24 | 21.0 | 22.0 | 4 | 24 | 18.0 | 18.0 | 4 | 10 | 4 | 10 | 24.1 | 28 | 40 | 52 | 4 | 8.5 | 22.0 | 23.0 | 5 | 12 | 5 | 12 | 0 |
| 30 FT | 8 | 8 | 8 | 8 | 4 | 11 | 4 | 10.5 | 24.5 | 24.0 | 24.0 | 24.0 | 4 | 24 | 21.0 | 22.0 | 4 | 24 | 18.0 | 18.0 | 4 | 9 | 4 | 9.5 | 24.1 | 28 | 40 | 52 | 4 | 8 | 22.0 | 23.0 | 5 | 12 | 5 | 12 | 0 |
| 32 FT | 8 | 9 | 8 | 8 | 4 | 10.5 | 4 | 9.5 | 24.5 | 24.0 | 24.0 | 24.0 | 4 | 23 | 21.0 | 22.0 | 4 | 23 | 18.0 | 18.0 | 4 | 9.5 | 4 | 12 | 24.5 | 29 | 41 | 53 | 4 | 9.5 | 21.0 | 23.0 | 5 | 12 | 5 | 12 | 0 |
| 34 FT | 8 | 9 | 8 | 8 | 4 | 10 | 4 | 9 | 24.5 | 24.0 | 24.0 | 24.0 | 4 | 22 | 21.0 | 22.0 | 4 | 22 | 18.0 | 18.0 | 4 | 9 | 4 | 11 | 24.4 | 29 | 41 | 53 | 4 | 9 | 21.0 | 23.0 | 5 | 12 | 5 | 12 | 0 |
| 36 FT | 8 | 9 | 8 | 8 | 4 | 9.5 | 4 | 8.5 | 24.5 | 24.0 | 24.0 | 24.0 | 4 | 21 | 21.0 | 22.0 | 4 | 21 | 18.0 | 18.0 | 4 | 8.5 | 4 | 10.5 | 24.4 | 29 | 41 | 53 | 4 | 8.5 | 21.0 | 23.0 | 5 | 12 | 5 | 12 | 0 |
| 38 FT | 8 | 9 | 8 | 8 | 4 | 9 | 4 | 8 | 24.5 | 24.0 | 24.0 | 24.0 | 4 | 20 | 21.0 | 22.0 | 4 | 20 | 18.0 | 18.0 | 4 | 8 | 4 | 10 | 24.4 | 29 | 41 | 53 | 4 | 8.5 | 21.0 | 23.0 | 5 | 12 | 5 | 12 | 0 |
| 40 FT | 8 | 10 | 8 | 8 | 4 | 8.5 | 4 | 7.5 | 24.5 | 24.0 | 24.0 | 24.0 | 4 | 19 | 21.0 | 22.0 | 4 | 19 | 18.0 | 18.0 | 4 | 8.5 | 4 | 12 | 24.8 | 30 | 42 | 54 | 4 | 9 | 21.0 | 23.0 | 5 | 12 | 5 | 12 | 0 |
| 42 FT | 9 | 10 | 8 | 8 | 4 | 9 | 4 | 9 | 24.8 | 25.0 | 25.0 | 25.0 | 4 | 21 | 21.0 | 23.0 | 4 | 21 | 17.0 | 18.0 | 4 | 8 | 4 | 11.5 | 24.8 | 30 | 42 | 54 | 4 | 9 | 21.0 | 23.0 | 5 | 12 | 5 | 12 | 0 |
| 44 FT | 9 | 10 | 8 | 8 | 4 | 8.5 | 4 | 8.5 | 24.8 | 25.0 | 25.0 | 25.0 | 4 | 20 | 21.0 | 23.0 | 4 | 20 | 17.0 | 18.0 | 4 | 8 | 4 | 11 | 24.8 | 30 | 42 | 54 | 4 | 9 | 21.0 | 23.0 | 5 | 12 | 5 | 12 | 0 |
| 46 FT | 9 | 10 | 8 | 8 | 4 | 8 | 4 | 8 | 24.8 | 25.0 | 25.0 | 25.0 | 4 | 19 | 21.0 | 23.0 | 4 | 19 | 17.0 | 18.0 | 4 | 7.5 | 4 | 10.5 | 24.8 | 30 | 42 | 54 | 4 | 8.5 | 21.0 | 23.0 | 5 | 12 | 5 | 12 | 0 |
| 48 FT | 9 | 11 | 8 | 8 | 4 | 8 | 4 | 7.5 | 24.9 | 25.0 | 25.0 | 25.0 | 4 | 19 | 21.0 | 22.0 | 4 | 19 | 18.0 | 18.0 | 4 | 8 | 4 | 10.5 | 25.0 | 31 | 43 | 55 | 4 | 9.5 | 21.0 | 23.0 | 5 | 12 | 5 | 12 | 0 |
| 50 FT | 10 | 11 | 8 | 8 | 4 | 8 | 4 | 8 | 25.1 | 26.0 | 26.0 | 26.0 | 4 | 20 | 21.0 | 23.0 | 4 | 20 | 17.0 | 18.0 | 4 | 7.5 | 4 | 10.5 | 25.1 | 31 | 43 | 55 | 4 | 9 | 21.0 | 23.0 | 5 | 12 | 5 | 12 | 0 |

SPAN (S) = 3 FT  HEIGHT (HT) = 5 FT OR 6 FT

| DESIGN FILL | MEMBER THICKNESS | | | | TOP SLAB BARS | | | | | | | | | | | | | | | BOTTOM SLAB BARS | | | | | | | | | | | | | WALL BARS | | | | |
|---|---|---|---|---|---|---|---|---|---|---|---|---|---|---|---|---|---|---|---|---|---|---|---|---|---|---|---|---|---|---|---|---|---|---|---|---|
| | | | | | A1 BARS | | J3 BARS | | | | | | H1 BARS | | | | H2 BARS | | | | A2 BARS | | J4 BARS | | | | | | H3 BARS | | | | | B1 BARS | | B2 BARS | | |
| | | | | | | | | | | K2 | | | | | | | | | | | | | | | | K3 | | | | | | | | | | | |
| | TS | BS | TX | TI | SIZE | SPA. | SIZE | SPA. | C1 | HT=5′ | HT=6′ | | SIZE | SPA. | C5 | Q8 | SIZE | SPA. | C6 | Q9 | SIZE | SPA. | SIZE | SPA. | C4 | HT=5′ | HT=6′ | | SIZE | SPA. | C7 | Q10 | | SIZE | SPA. | SIZE | SPA. | G1 |
| 1 FT | 10 | 8 | 8 | 8 | 4 | 8.5 | 4 | 10.5 | 26.8 | 26.0 | 26.0 | | 4 | 24 | 39.5 | 30.5 | 4 | 24 | 21.0 | 20.0 | 4 | 12 | 4 | 11.5 | 36.0 | 64 | 76 | | 4 | 12 | 34.0 | 25.0 | | 5 | 12 | 5 | 12 | 12 |
| 2 FT | 10 | 8 | 8 | 8 | 4 | 8.5 | 4 | 10.5 | 26.8 | 26.0 | 26.0 | | 4 | 24 | 39.5 | 30.5 | 4 | 24 | 20.0 | 20.0 | 4 | 12 | 4 | 11 | 36.0 | 64 | 76 | | 4 | 12 | 34.0 | 24.0 | | 5 | 12 | 5 | 12 | 12 |
| 4 FT | 8 | 8 | 8 | 8 | 4 | 12 | 4 | 12 | 26.8 | 24.0 | 24.0 | | 4 | 24 | 39.5 | 34.0 | 4 | 24 | 19.0 | 19.0 | 4 | 12 | 4 | 10 | 36.0 | 64 | 76 | | 4 | 12 | 34.0 | 24.0 | | 5 | 12 | 5 | 12 | 12 |
| 6 FT | 8 | 8 | 8 | 8 | 4 | 12 | 4 | 12 | 26.8 | 24.0 | 24.0 | | 4 | 24 | 39.5 | 26.0 | 4 | 24 | 18.0 | 19.0 | 4 | 12 | 4 | 9.5 | 36.0 | 64 | 76 | | 4 | 12 | 34.0 | 23.0 | | 5 | 12 | 5 | 12 | 12 |
| 8 FT | 8 | 8 | 8 | 8 | 4 | 12 | 4 | 12 | 26.8 | 24.0 | 24.0 | | 4 | 24 | 39.5 | 24.0 | 4 | 24 | 18.0 | 18.0 | 4 | 12 | 4 | 9 | 36.0 | 64 | 76 | | 4 | 12 | 24.0 | 23.0 | | 5 | 12 | 5 | 12 | 0 |
| 10 FT | 8 | 8 | 8 | 8 | 4 | 12 | 4 | 12 | 26.8 | 24.0 | 24.0 | | 4 | 24 | 39.5 | 23.0 | 4 | 24 | 18.0 | 18.0 | 4 | 12 | 4 | 8.5 | 36.0 | 64 | 76 | | 4 | 12 | 23.0 | 23.0 | | 5 | 12 | 5 | 12 | 0 |
| 12 FT | 8 | 8 | 8 | 8 | 4 | 12 | 4 | 12 | 34.9 | 24.0 | 24.0 | | 4 | 24 | 22.0 | 22.0 | 4 | 24 | 17.0 | 18.0 | 4 | 12 | 4 | 9 | 34.4 | 64 | 76 | | 4 | 12 | 22.0 | 23.0 | | 5 | 12 | 5 | 12 | 0 |
| 14 FT | 8 | 8 | 8 | 8 | 4 | 12 | 4 | 11 | 34.5 | 24.0 | 24.0 | | 4 | 24 | 22.0 | 22.0 | 4 | 24 | 17.0 | 18.0 | 4 | 12 | 4 | 8.5 | 34.1 | 64 | 76 | | 4 | 12 | 22.0 | 23.0 | | 5 | 12 | 5 | 12 | 0 |
| 16 FT | 8 | 8 | 8 | 8 | 4 | 12 | 4 | 10 | 34.3 | 24.0 | 24.0 | | 4 | 24 | 22.0 | 22.0 | 4 | 24 | 17.0 | 18.0 | 4 | 12 | 4 | 8 | 33.9 | 64 | 76 | | 4 | 12 | 22.0 | 23.0 | | 5 | 12 | 5 | 12 | 0 |
| 18 FT | 8 | 8 | 8 | 8 | 4 | 12 | 4 | 9 | 34.0 | 24.0 | 24.0 | | 4 | 24 | 22.0 | 22.0 | 4 | 24 | 17.0 | 18.0 | 4 | 12 | 4 | 7.5 | 33.8 | 64 | 76 | | 4 | 12 | 22.0 | 23.0 | | 5 | 12 | 5 | 12 | 0 |
| 20 FT | 8 | 8 | 8 | 8 | 4 | 12 | 4 | 8 | 33.8 | 24.0 | 24.0 | | 4 | 24 | 22.0 | 22.0 | 4 | 24 | 17.0 | 18.0 | 4 | 12 | 4 | 7 | 33.6 | 64 | 76 | | 4 | 11.5 | 22.0 | 23.0 | | 5 | 12 | 5 | 12 | 0 |
| 22 FT | 8 | 8 | 8 | 8 | 4 | 12 | 4 | 7.5 | 33.6 | 24.0 | 24.0 | | 4 | 24 | 22.0 | 22.0 | 4 | 24 | 17.0 | 18.0 | 4 | 12 | 4 | 6.5 | 33.5 | 64 | 76 | | 4 | 10.5 | 22.0 | 23.0 | | 5 | 12 | 5 | 12 | 0 |
| 24 FT | 8 | 8 | 8 | 8 | 4 | 12 | 4 | 7 | 33.5 | 24.0 | 24.0 | | 4 | 24 | 22.0 | 22.0 | 4 | 24 | 17.0 | 18.0 | 4 | 11.5 | 4 | 6 | 33.4 | 64 | 76 | | 4 | 10.5 | 22.0 | 23.0 | | 5 | 12 | 5 | 12 | 0 |
| 26 FT | 8 | 8 | 8 | 8 | 4 | 12 | 4 | 6.5 | 33.4 | 24.0 | 24.0 | | 4 | 24 | 21.0 | 22.0 | 4 | 24 | 17.0 | 18.0 | 4 | 10.5 | 5 | 6.5 | 33.3 | 64 | 76 | | 4 | 10 | 22.0 | 22.0 | | 5 | 12 | 5 | 12 | 0 |
| 28 FT | 8 | 8 | 8 | 8 | 4 | 12 | 4 | 6 | 33.3 | 24.0 | 24.0 | | 4 | 24 | 21.0 | 22.0 | 4 | 24 | 17.0 | 18.0 | 4 | 10 | 5 | 6 | 33.1 | 64 | 76 | | 4 | 9.5 | 22.0 | 22.0 | | 5 | 12 | 5 | 12 | 0 |
| 30 FT | 8 | 8 | 9 | 8 | 4 | 11.5 | 4 | 6.5 | 32.3 | 24.0 | 24.0 | | 4 | 24 | 21.0 | 22.0 | 4 | 24 | 17.0 | 18.0 | 4 | 9.5 | 4 | 6 | 32.1 | 64 | 76 | | 4 | 9 | 22.0 | 23.0 | | 5 | 12 | 5 | 12 | 0 |
| 32 FT | 8 | 9 | 9 | 8 | 4 | 11 | 4 | 6.5 | 32.1 | 24.0 | 24.0 | | 4 | 24 | 21.0 | 22.0 | 4 | 24 | 17.0 | 18.0 | 4 | 10 | 4 | 6.5 | 34.1 | 65 | 77 | | 4 | 10.5 | 22.0 | 23.0 | | 5 | 12 | 5 | 12 | 0 |
| 34 FT | 8 | 9 | 9 | 8 | 4 | 10 | 4 | 6 | 32.0 | 24.0 | 24.0 | | 4 | 23 | 21.0 | 22.0 | 4 | 23 | 17.0 | 18.0 | 4 | 9.5 | 4 | 6 | 34.0 | 65 | 77 | | 4 | 10 | 22.0 | 23.0 | | 5 | 12 | 5 | 11.5 | 0 |
| 36 FT | 8 | 9 | 9 | 8 | 4 | 9.5 | 5 | 7 | 32.0 | 24.0 | 24.0 | | 4 | 22 | 21.0 | 22.0 | 4 | 22 | 17.0 | 18.0 | 4 | 9 | 4 | 6 | 34.0 | 65 | 77 | | 4 | 10 | 22.0 | 23.0 | | 5 | 12 | 5 | 11 | 0 |
| 38 FT | 8 | 9 | 9 | 8 | 4 | 9 | 5 | 6.5 | 32.0 | 24.0 | 28.0 | | 4 | 21 | 21.0 | 22.0 | 4 | 21 | 17.0 | 18.0 | 4 | 8.5 | 5 | 7 | 34.0 | 65 | 77 | | 4 | 9.5 | 22.0 | 23.0 | | 5 | 12 | 5 | 10 | 0 |
| 40 FT | 8 | 10 | 9 | 8 | 4 | 8.5 | 5 | 6 | 31.9 | 24.0 | 24.0 | | 4 | 20 | 21.0 | 22.0 | 4 | 20 | 17.0 | 18.0 | 4 | 9 | 4 | 6 | 35.5 | 66 | 78 | | 4 | 10.5 | 23.0 | 23.0 | | 5 | 12 | 5 | 10 | 0 |
| 42 FT | 9 | 10 | 9 | 8 | 4 | 9.5 | 5 | 6.5 | 33.4 | 25.0 | 29.0 | | 4 | 22 | 21.0 | 22.0 | 4 | 22 | 17.0 | 18.0 | 4 | 9 | 5 | 7 | 35.3 | 66 | 78 | | 4 | 10 | 23.0 | 23.0 | | 5 | 12 | 5 | 9.5 | 0 |
| 44 FT | 9 | 10 | 9 | 8 | 4 | 9 | 5 | 6.5 | 33.3 | 25.0 | 29.0 | | 4 | 21 | 21.0 | 22.0 | 4 | 21 | 17.0 | 18.0 | 4 | 8.5 | 5 | 6.5 | 35.3 | 66 | 78 | | 4 | 10 | 23.0 | 23.0 | | 5 | 12 | 5 | 9 | 0 |
| 46 FT | 9 | 10 | 9 | 8 | 4 | 8.5 | 5 | 6 | 33.3 | 25.0 | 29.0 | | 4 | 21 | 21.0 | 22.0 | 4 | 21 | 17.0 | 18.0 | 4 | 8 | 5 | 6.5 | 35.1 | 66 | 78 | | 4 | 9.5 | 23.0 | 23.0 | | 5 | 12 | 5 | 8.5 | 0 |
| 48 FT | 9 | 11 | 9 | 8 | 4 | 8 | 5 | 6 | 33.1 | 25.0 | 29.0 | | 4 | 20 | 21.0 | 22.0 | 4 | 20 | 17.0 | 18.0 | 4 | 8.5 | 5 | 6.5 | 36.4 | 67 | 79 | | 4 | 10 | 23.0 | 23.0 | | 5 | 12 | 5 | 8.5 | 0 |
| 50 FT | 9 | 11 | 9 | 8 | 4 | 7.5 | 5 | 6 | 33.1 | 25.0 | 29.0 | | 4 | 19 | 21.0 | 22.0 | 4 | 19 | 17.0 | 18.0 | 4 | 8.5 | 5 | 6.5 | 36.4 | 67 | 79 | | 4 | 10 | 23.0 | 23.0 | | 5 | 12 | 5 | 8.5 | 0 |

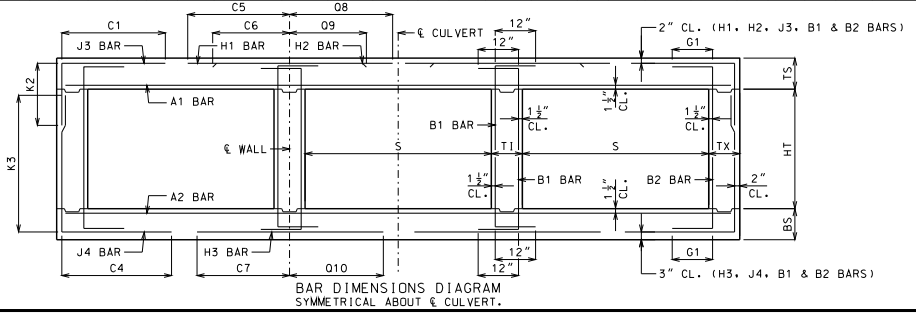


BAR DIMENSIONS DIAGRAM
SYMMETRICAL ABOUT ℄ CULVERT.

GENERAL NOTES:

IF DESIGN FILL IS BETWEEN TABULATED DESIGN FILLS, USE THE NEXT GREATER TABULATED DESIGN FILL, EXCEPT FOR DESIGN FILLS BETWEEN 2 FEET AND 4 FEET. FOR DESIGN FILLS BETWEEN 2 FEET AND 4 FEET USE THE GREATER MEMBER THICKNESS, AREA OF REINFORCEMENT AND BAR DIMENSIONS FROM THE 2 FEET AND 4 FEET TABULATED DESIGN FILLS. AREA OF REINFORCEMENT EQUALS BAR AREA PER FOOT SPACING.

SPECIAL DESIGNS ARE REQUIRED WHEN THE DESIGN FILL IS LESS THAN 1 FOOT OR GREATER THAN 50 FEET.

DIMENSIONS ARE IN INCHES UNLESS OTHERWISE SPECIFIED.

DESIGN FILLS ARE MEASURED FROM THE TOP OF TOP SLAB TO THE TOP OF EARTH FILL OR ROADWAY.

CULVERTS MEET STRENGTH AND SERVICEABILITY REQUIREMENTS FOR THE DESIGN VEHICULAR LIVE LOAD HL-93 MINUS THE LANE LOAD.


MISSOURI HIGHWAYS AND TRANSPORTATION COMMISSION
105 WEST CAPITOL
JEFFERSON CITY, MO 65102
1-888-ASK-MODOT (1-888-275-6636)


STATE OF MISSOURI
DENNIS W. HECKMANN
NUMBER PE-27141
PROFESSIONAL ENGINEER
THIS SHEET HAS BEEN SIGNED, SEALED AND DATED ELECTRONICALLY.

# CONCRETE TRIPLE BOX CULVERT

MEMBER THICKNESS
BAR SIZE, SPACING & DIMENSIONS

SPAN (S): 3 FEET
HEIGHT (HT): 2 THRU 6 FEET

DATE EFFECTIVE: 12/01/2011
DATE PREPARED: 9/29/2011

703.87

SHEET NO.
1 OF 27

IF A SEAL IS PRESENT ON THIS SHEET IT HAS BEEN ELECTRONICALLY SEALED AND DATED.

## SPAN (S) = 4 FT  HEIGHT (HT) = 2 FT OR 3 FT

| DESIGN FILL | MEMBER THICKNESS | | | | TOP SLAB BARS | | | | | | | | | | | | | | BOTTOM SLAB BARS | | | | | | | | | | WALL BARS | | | | |
|---|---|---|---|---|---|---|---|---|---|---|---|---|---|---|---|---|---|---|---|---|---|---|---|---|---|---|---|---|---|---|---|---|---|
| | | | | | A1 BARS | | J3 BARS | | | K2 | | H1 BARS | | | | H2 BARS | | | | A2 BARS | | J4 BARS | | | K3 | | H3 BARS | | | | B1 BARS | | B2 BARS | |
| | TS | BS | TX | TI | SIZE | SPA. | SIZE | SPA. | C1 | HT=2′ | HT=3′ | SIZE | SPA. | C5 | O8 | SIZE | SPA. | C6 | O9 | SIZE | SPA. | SIZE | SPA. | C4 | HT=2′ | HT=3′ | SIZE | SPA. | C7 | O10 | SIZE | SPA. | SIZE | SPA. | G1 |
| 1 FT | 10 | 8 | 8 | 8 | 4 | 7 | 4 | 10.5 | 30.3 | 26.0 | 26.0 | 4 | 24 | 47.5 | 36.5 | 4 | 24 | 21.0 | 20.0 | 4 | 12 | 4 | 12 | 29.4 | 28 | 40 | 4 | 12 | 27.0 | 28.0 | 5 | 12 | 5 | 12 | 12 |
| 2 FT | 10 | 8 | 8 | 8 | 4 | 7 | 4 | 10.5 | 30.3 | 26.0 | 26.0 | 4 | 24 | 47.5 | 36.5 | 4 | 24 | 21.0 | 20.0 | 4 | 12 | 4 | 12 | 27.3 | 28 | 40 | 4 | 11.5 | 27.0 | 27.0 | 5 | 12 | 5 | 12 | 12 |
| 4 FT | 8 | 8 | 8 | 8 | 4 | 12 | 4 | 12 | 28.6 | 24.0 | 24.0 | 4 | 24 | 33.0 | 36.0 | 4 | 24 | 20.0 | 20.0 | 4 | 12 | 4 | 12 | 25.0 | 28 | 40 | 4 | 11.5 | 26.0 | 27.0 | 5 | 12 | 5 | 12 | 12 |
| 6 FT | 8 | 8 | 8 | 8 | 4 | 12 | 4 | 12 | 26.0 | 24.0 | 24.0 | 4 | 24 | 28.0 | 29.0 | 4 | 24 | 19.0 | 19.0 | 4 | 12 | 4 | 12 | 24.1 | 28 | 40 | 4 | 10.5 | 25.0 | 26.0 | 5 | 12 | 5 | 12 | 12 |
| 8 FT | 8 | 8 | 8 | 8 | 4 | 12 | 4 | 12 | 24.8 | 24.0 | 24.0 | 4 | 24 | 26.0 | 28.0 | 4 | 24 | 19.0 | 19.0 | 4 | 12 | 4 | 12 | 23.5 | 28 | 40 | 4 | 10 | 25.0 | 26.0 | 5 | 12 | 5 | 12 | 0 |
| 10 FT | 8 | 8 | 8 | 8 | 4 | 12 | 4 | 12 | 24.1 | 24.0 | 24.0 | 4 | 24 | 26.0 | 27.0 | 4 | 24 | 19.0 | 19.0 | 4 | 12 | 4 | 12 | 23.1 | 28 | 40 | 4 | 9 | 25.0 | 26.0 | 5 | 12 | 5 | 12 | 0 |
| 12 FT | 8 | 8 | 8 | 8 | 4 | 12 | 4 | 12 | 23.6 | 24.0 | 24.0 | 4 | 23 | 25.0 | 26.0 | 4 | 23 | 18.0 | 19.0 | 4 | 12 | 4 | 12 | 22.9 | 28 | 40 | 4 | 8 | 25.0 | 26.0 | 5 | 12 | 5 | 12 | 0 |
| 14 FT | 8 | 8 | 8 | 8 | 4 | 12 | 4 | 12 | 23.4 | 24.0 | 24.0 | 4 | 22 | 25.0 | 26.0 | 4 | 22 | 18.0 | 18.0 | 4 | 11 | 4 | 12 | 22.6 | 28 | 40 | 4 | 7.5 | 24.0 | 26.0 | 5 | 12 | 5 | 12 | 0 |
| 16 FT | 8 | 8 | 8 | 8 | 4 | 12 | 4 | 12 | 22.5 | 24.0 | 24.0 | 4 | 21 | 24.0 | 25.0 | 4 | 21 | 18.0 | 18.0 | 4 | 10.5 | 4 | 12 | 22.1 | 28 | 40 | 4 | 7.5 | 24.0 | 25.0 | 5 | 12 | 5 | 12 | 0 |
| 18 FT | 8 | 8 | 8 | 8 | 4 | 11.5 | 4 | 12 | 22.5 | 24.0 | 24.0 | 4 | 20 | 24.0 | 25.0 | 4 | 20 | 18.0 | 18.0 | 4 | 9.5 | 4 | 10.5 | 22.1 | 28 | 40 | 4 | 7 | 24.0 | 25.0 | 5 | 12 | 5 | 12 | 0 |
| 20 FT | 8 | 8 | 8 | 8 | 4 | 10.5 | 4 | 11 | 22.4 | 24.0 | 24.0 | 4 | 18 | 24.0 | 25.0 | 4 | 18 | 18.0 | 18.0 | 4 | 8.5 | 4 | 9.5 | 22.1 | 28 | 40 | 4 | 6.5 | 24.0 | 25.0 | 5 | 12 | 5 | 12 | 0 |
| 22 FT | 8 | 8 | 8 | 8 | 4 | 9.5 | 4 | 10 | 22.4 | 24.0 | 24.0 | 4 | 17 | 24.0 | 25.0 | 4 | 17 | 18.0 | 18.0 | 4 | 7.5 | 4 | 9 | 22.0 | 28 | 40 | 4 | 6 | 24.0 | 25.0 | 5 | 12 | 5 | 12 | 0 |
| 24 FT | 8 | 9 | 8 | 8 | 4 | 8.5 | 4 | 9 | 22.6 | 24.0 | 24.0 | 4 | 15 | 24.0 | 25.0 | 4 | 15 | 18.0 | 18.0 | 4 | 8 | 4 | 11.5 | 21.4 | 29 | 41 | 4 | 7 | 24.0 | 26.0 | 5 | 12 | 5 | 12 | 0 |
| 26 FT | 8 | 9 | 8 | 8 | 4 | 8 | 4 | 8.5 | 22.5 | 24.0 | 24.0 | 4 | 14 | 24.0 | 25.0 | 4 | 14 | 18.0 | 18.0 | 4 | 7 | 4 | 11 | 21.4 | 29 | 41 | 4 | 6.5 | 24.0 | 26.0 | 5 | 12 | 5 | 12 | 0 |
| 28 FT | 8 | 10 | 8 | 8 | 4 | 7.5 | 4 | 8 | 22.8 | 24.0 | 24.0 | 4 | 13 | 24.0 | 25.0 | 4 | 13 | 18.0 | 18.0 | 4 | 7.5 | 4 | 12 | 20.9 | 30 | 42 | 4 | 7 | 24.0 | 26.0 | 5 | 12 | 5 | 12 | 0 |
| 30 FT | 9 | 10 | 8 | 8 | 4 | 7.5 | 4 | 10 | 22.1 | 25.0 | 25.0 | 4 | 15 | 24.0 | 26.0 | 4 | 15 | 18.0 | 18.0 | 4 | 7 | 4 | 12 | 21.0 | 30 | 42 | 4 | 7 | 24.0 | 26.0 | 5 | 12 | 5 | 12 | 0 |
| 32 FT | 9 | 10 | 8 | 8 | 4 | 7 | 4 | 9.5 | 22.1 | 25.0 | 25.0 | 4 | 14 | 24.0 | 26.0 | 4 | 14 | 18.0 | 18.0 | 4 | 6 | 4 | 12 | 21.0 | 30 | 42 | 4 | 6 | 24.0 | 26.0 | 5 | 12 | 5 | 12 | 0 |
| 34 FT | 9 | 11 | 8 | 8 | 4 | 6.5 | 4 | 9 | 22.3 | 25.0 | 25.0 | 4 | 13 | 24.0 | 26.0 | 4 | 13 | 18.0 | 18.0 | 4 | 6.5 | 4 | 10.5 | 20.6 | 31 | 43 | 4 | 7 | 24.0 | 26.0 | 5 | 12 | 5 | 12 | 0 |
| 36 FT | 10 | 11 | 8 | 8 | 4 | 7 | 4 | 10 | 21.9 | 26.0 | 26.0 | 4 | 14 | 24.0 | 26.0 | 4 | 14 | 18.0 | 19.0 | 4 | 6.5 | 4 | 10.5 | 20.9 | 31 | 43 | 4 | 7 | 24.0 | 26.0 | 5 | 12 | 5 | 12 | 0 |
| 38 FT | 10 | 12 | 8 | 8 | 4 | 6.5 | 4 | 9.5 | 22.0 | 26.0 | 26.0 | 4 | 13 | 24.0 | 26.0 | 4 | 13 | 18.0 | 19.0 | 4 | 6.5 | 4 | 9.5 | 20.5 | 32 | 44 | 4 | 7.5 | 24.0 | 27.0 | 5 | 12 | 5 | 12 | 0 |
| 40 FT | 10 | 12 | 8 | 8 | 4 | 6 | 4 | 9 | 22.0 | 26.0 | 26.0 | 4 | 13 | 24.0 | 26.0 | 4 | 13 | 18.0 | 19.0 | 4 | 6.5 | 4 | 9.5 | 20.5 | 32 | 44 | 4 | 7 | 24.0 | 27.0 | 5 | 12 | 5 | 12 | 0 |
| 42 FT | 11 | 12 | 8 | 8 | 4 | 6.5 | 4 | 9.5 | 21.6 | 27.0 | 27.0 | 4 | 14 | 23.0 | 26.0 | 4 | 14 | 18.0 | 19.0 | 4 | 6 | 4 | 9.5 | 20.8 | 32 | 44 | 4 | 6.5 | 24.0 | 26.0 | 5 | 12 | 5 | 12 | 0 |
| 44 FT | 11 | 12 | 8 | 8 | 4 | 6 | 4 | 9.5 | 21.6 | 27.0 | 27.0 | 4 | 13 | 23.0 | 26.0 | 4 | 13 | 18.0 | 19.0 | 4 | 6 | 4 | 9.5 | 20.8 | 32 | 44 | 4 | 6 | 24.0 | 26.0 | 5 | 12 | 5 | 12 | 0 |
| 46 FT | 11 | 13 | 8 | 8 | 4 | 6 | 4 | 8.5 | 21.8 | 27.0 | 27.0 | 4 | 12 | 23.0 | 26.0 | 4 | 12 | 18.0 | 19.0 | 4 | 6 | 4 | 8.5 | 20.5 | 33 | 45 | 4 | 6.5 | 23.0 | 27.0 | 5 | 12 | 5 | 12 | 0 |
| 48 FT | 12 | 13 | 8 | 8 | 4 | 6 | 4 | 8.5 | 21.5 | 28.0 | 28.0 | 4 | 13 | 23.0 | 26.0 | 4 | 13 | 18.0 | 19.0 | 4 | 6 | 4 | 8.5 | 20.8 | 33 | 45 | 4 | 6.5 | 24.0 | 27.0 | 5 | 12 | 5 | 12 | 0 |
| 50 FT | 12 | 13 | 8 | 8 | 5 | 9 | 4 | 8.5 | 21.5 | 28.0 | 28.0 | 4 | 13 | 23.0 | 26.0 | 4 | 13 | 18.0 | 19.0 | 5 | 8.5 | 4 | 8.5 | 20.8 | 33 | 45 | 4 | 6 | 24.0 | 27.0 | 5 | 12 | 5 | 12 | 0 |

## SPAN (S) = 4 FT  HEIGHT (HT) = 4 FT OR 5 FT

| DESIGN FILL | MEMBER THICKNESS | | | | TOP SLAB BARS | | | | | | | | | | | | | | BOTTOM SLAB BARS | | | | | | | | | | WALL BARS | | | | |
|---|---|---|---|---|---|---|---|---|---|---|---|---|---|---|---|---|---|---|---|---|---|---|---|---|---|---|---|---|---|---|---|---|---|
| | | | | | A1 BARS | | J3 BARS | | | K2 | | H1 BARS | | | | H2 BARS | | | | A2 BARS | | J4 BARS | | | K3 | | H3 BARS | | | | B1 BARS | | B2 BARS | |
| | TS | BS | TX | TI | SIZE | SPA. | SIZE | SPA. | C1 | HT=4′ | HT=5′ | SIZE | SPA. | C5 | O8 | SIZE | SPA. | C6 | O9 | SIZE | SPA. | SIZE | SPA. | C4 | HT=4′ | HT=5′ | SIZE | SPA. | C7 | O10 | SIZE | SPA. | SIZE | SPA. | G1 |
| 1 FT | 10 | 8 | 8 | 8 | 4 | 7 | 4 | 10.5 | 30.3 | 26.0 | 26.0 | 4 | 24 | 47.5 | 36.5 | 4 | 24 | 21.0 | 21.0 | 4 | 12 | 4 | 12 | 42.0 | 52 | 64 | 4 | 12 | 28.0 | 28.0 | 5 | 12 | 5 | 12 | 12 |
| 2 FT | 10 | 8 | 8 | 8 | 4 | 7 | 4 | 10.5 | 30.3 | 26.0 | 26.0 | 4 | 24 | 47.5 | 36.5 | 4 | 24 | 21.0 | 21.0 | 4 | 12 | 4 | 12 | 39.1 | 52 | 64 | 4 | 11 | 27.0 | 28.0 | 5 | 12 | 5 | 12 | 12 |
| 4 FT | 8 | 8 | 8 | 8 | 4 | 12 | 4 | 12 | 30.3 | 24.0 | 24.0 | 4 | 24 | 47.5 | 37.0 | 4 | 24 | 20.0 | 20.0 | 4 | 12 | 4 | 12 | 34.8 | 52 | 64 | 4 | 11 | 26.0 | 27.0 | 5 | 12 | 5 | 12 | 12 |
| 6 FT | 8 | 8 | 8 | 8 | 4 | 12 | 4 | 12 | 34.6 | 24.0 | 24.0 | 4 | 24 | 29.0 | 30.0 | 4 | 24 | 19.0 | 19.0 | 4 | 12 | 4 | 11.5 | 32.1 | 52 | 64 | 4 | 10.5 | 25.0 | 26.0 | 5 | 12 | 5 | 12 | 12 |
| 8 FT | 8 | 8 | 8 | 8 | 4 | 12 | 4 | 12 | 31.4 | 24.0 | 24.0 | 4 | 24 | 27.0 | 28.0 | 4 | 24 | 19.0 | 19.0 | 4 | 12 | 4 | 11 | 30.3 | 52 | 64 | 4 | 9.5 | 25.0 | 26.0 | 5 | 12 | 5 | 12 | 0 |
| 10 FT | 8 | 8 | 8 | 8 | 4 | 12 | 4 | 12 | 29.9 | 24.0 | 24.0 | 4 | 24 | 26.0 | 27.0 | 4 | 24 | 19.0 | 19.0 | 4 | 12 | 4 | 10.5 | 29.3 | 52 | 64 | 4 | 9 | 25.0 | 26.0 | 5 | 12 | 5 | 12 | 0 |
| 12 FT | 8 | 8 | 8 | 8 | 4 | 12 | 4 | 12 | 29.1 | 24.0 | 24.0 | 4 | 24 | 25.0 | 27.0 | 4 | 24 | 18.0 | 19.0 | 4 | 11.5 | 4 | 10 | 28.5 | 52 | 64 | 4 | 8.5 | 24.0 | 26.0 | 5 | 12 | 5 | 12 | 0 |
| 14 FT | 8 | 8 | 8 | 8 | 4 | 12 | 4 | 11 | 28.5 | 24.0 | 24.0 | 4 | 23 | 25.0 | 26.0 | 4 | 23 | 18.0 | 19.0 | 4 | 10.5 | 4 | 9.5 | 28.1 | 52 | 64 | 4 | 7.5 | 24.0 | 26.0 | 5 | 12 | 5 | 12 | 0 |
| 16 FT | 8 | 8 | 8 | 8 | 4 | 12 | 4 | 11 | 26.9 | 24.0 | 24.0 | 4 | 22 | 24.0 | 26.0 | 4 | 22 | 18.0 | 19.0 | 4 | 10 | 4 | 9.5 | 26.6 | 52 | 64 | 4 | 7.5 | 24.0 | 26.0 | 5 | 12 | 5 | 12 | 0 |
| 18 FT | 8 | 8 | 8 | 8 | 4 | 11 | 4 | 10 | 26.8 | 24.0 | 24.0 | 4 | 21 | 24.0 | 26.0 | 4 | 21 | 18.0 | 19.0 | 4 | 9 | 4 | 8.5 | 26.5 | 52 | 64 | 4 | 7 | 24.0 | 26.0 | 5 | 12 | 5 | 12 | 0 |
| 20 FT | 8 | 8 | 8 | 8 | 4 | 10 | 4 | 9 | 26.8 | 24.0 | 24.0 | 4 | 19 | 24.0 | 26.0 | 4 | 19 | 18.0 | 19.0 | 4 | 8 | 4 | 8 | 26.4 | 52 | 64 | 4 | 6.5 | 24.0 | 26.0 | 5 | 12 | 5 | 12 | 0 |
| 22 FT | 8 | 8 | 8 | 8 | 4 | 9 | 4 | 8 | 26.6 | 24.0 | 24.0 | 4 | 17 | 24.0 | 26.0 | 4 | 17 | 18.0 | 18.0 | 4 | 7 | 4 | 7 | 26.4 | 52 | 64 | 4 | 6 | 24.0 | 26.0 | 5 | 12 | 5 | 12 | 0 |
| 24 FT | 8 | 9 | 8 | 8 | 4 | 8.5 | 4 | 7.5 | 26.6 | 24.0 | 24.0 | 4 | 16 | 24.0 | 25.0 | 4 | 16 | 18.0 | 18.0 | 4 | 7.5 | 4 | 8.5 | 26.6 | 53 | 65 | 4 | 7 | 24.0 | 26.0 | 5 | 12 | 5 | 12 | 0 |
| 26 FT | 8 | 9 | 8 | 8 | 4 | 8 | 4 | 7 | 26.6 | 24.0 | 24.0 | 4 | 14 | 24.0 | 25.0 | 4 | 14 | 18.0 | 18.0 | 4 | 7 | 4 | 8 | 26.5 | 53 | 65 | 4 | 6.5 | 24.0 | 26.0 | 5 | 12 | 5 | 12 | 0 |
| 28 FT | 8 | 10 | 8 | 8 | 4 | 7.5 | 4 | 6 | 26.6 | 24.0 | 24.0 | 4 | 13 | 24.0 | 25.0 | 4 | 13 | 18.0 | 18.0 | 4 | 7.5 | 4 | 9.5 | 26.8 | 54 | 66 | 4 | 7.5 | 24.0 | 26.0 | 5 | 12 | 5 | 12 | 0 |
| 30 FT | 9 | 10 | 8 | 8 | 4 | 7.5 | 4 | 7.5 | 26.9 | 25.0 | 25.0 | 4 | 15 | 24.0 | 26.0 | 4 | 15 | 18.0 | 19.0 | 4 | 7 | 4 | 9 | 26.9 | 54 | 66 | 4 | 7 | 24.0 | 26.0 | 5 | 12 | 5 | 12 | 0 |
| 32 FT | 9 | 10 | 8 | 8 | 4 | 7 | 4 | 7 | 26.9 | 25.0 | 25.0 | 4 | 14 | 24.0 | 26.0 | 4 | 14 | 18.0 | 19.0 | 4 | 6 | 4 | 8 | 26.8 | 54 | 66 | 4 | 6 | 24.0 | 26.0 | 5 | 12 | 5 | 12 | 0 |
| 34 FT | 9 | 11 | 8 | 8 | 4 | 6.5 | 4 | 6.5 | 26.9 | 25.0 | 25.0 | 4 | 13 | 24.0 | 26.0 | 4 | 13 | 18.0 | 18.0 | 4 | 6.5 | 4 | 8.5 | 27.0 | 55 | 67 | 4 | 7 | 24.0 | 26.0 | 5 | 12 | 5 | 12 | 0 |
| 36 FT | 10 | 11 | 8 | 8 | 4 | 7 | 4 | 6.5 | 27.1 | 26.0 | 26.0 | 4 | 14 | 23.0 | 26.0 | 4 | 14 | 18.0 | 19.0 | 4 | 6.5 | 4 | 8 | 27.1 | 55 | 67 | 4 | 7 | 24.0 | 26.0 | 5 | 12 | 5 | 12 | 0 |
| 38 FT | 10 | 12 | 8 | 8 | 4 | 6.5 | 4 | 6 | 27.3 | 26.0 | 26.0 | 4 | 14 | 23.0 | 26.0 | 4 | 14 | 18.0 | 19.0 | 4 | 6.5 | 4 | 8 | 27.4 | 56 | 68 | 4 | 7.5 | 24.0 | 26.0 | 5 | 12 | 5 | 12 | 0 |
| 40 FT | 10 | 12 | 8 | 8 | 4 | 6 | 5 | 8 | 27.1 | 26.0 | 26.0 | 4 | 13 | 23.0 | 26.0 | 4 | 13 | 18.0 | 19.0 | 4 | 6.5 | 4 | 7.5 | 27.4 | 56 | 68 | 4 | 7 | 24.0 | 26.0 | 5 | 12 | 5 | 12 | 0 |
| 42 FT | 11 | 12 | 8 | 8 | 4 | 6.5 | 5 | 9 | 27.4 | 27.0 | 27.0 | 4 | 14 | 23.0 | 26.0 | 4 | 14 | 18.0 | 19.0 | 4 | 6 | 4 | 7 | 27.4 | 56 | 68 | 4 | 6.5 | 24.0 | 26.0 | 5 | 12 | 5 | 12 | 0 |
| 44 FT | 11 | 12 | 8 | 8 | 4 | 6 | 5 | 8.5 | 27.4 | 27.0 | 27.0 | 4 | 13 | 23.0 | 26.0 | 4 | 13 | 18.0 | 19.0 | 4 | 6 | 4 | 6.5 | 27.4 | 56 | 68 | 4 | 6.5 | 24.0 | 26.0 | 5 | 12 | 5 | 12 | 0 |
| 46 FT | 11 | 13 | 8 | 8 | 4 | 6 | 5 | 8.5 | 27.5 | 27.0 | 27.0 | 4 | 13 | 23.0 | 26.0 | 4 | 13 | 18.0 | 19.0 | 4 | 6 | 4 | 7 | 27.6 | 57 | 69 | 4 | 6.5 | 24.0 | 26.0 | 5 | 12 | 5 | 12 | 0 |
| 48 FT | 12 | 13 | 8 | 8 | 4 | 6 | 5 | 8.5 | 27.6 | 28.0 | 28.0 | 4 | 14 | 23.0 | 25.0 | 4 | 14 | 18.0 | 18.0 | 4 | 6 | 4 | 6.5 | 27.8 | 57 | 69 | 4 | 6.5 | 24.0 | 26.0 | 5 | 12 | 5 | 11.5 | 0 |
| 50 FT | 12 | 13 | 8 | 8 | 4 | 6 | 5 | 8.5 | 27.6 | 28.0 | 28.0 | 4 | 13 | 23.0 | 25.0 | 4 | 13 | 18.0 | 18.0 | 5 | 9 | 4 | 6 | 27.8 | 57 | 69 | 4 | 6 | 24.0 | 26.0 | 5 | 12 | 5 | 11 | 0 |

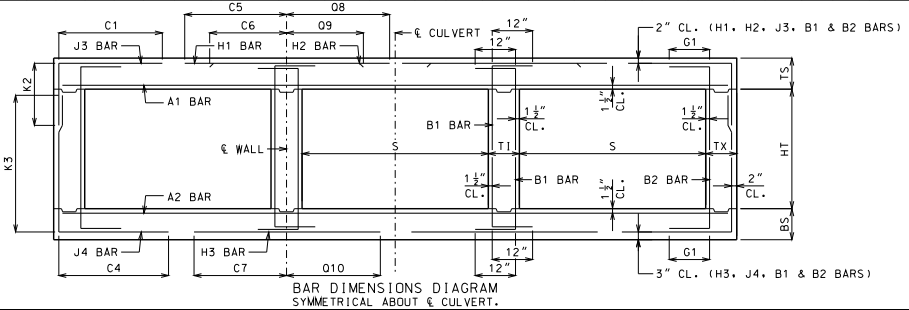


BAR DIMENSIONS DIAGRAM
SYMMETRICAL ABOUT ℄ CULVERT.

GENERAL NOTES:

IF DESIGN FILL IS BETWEEN TABULATED DESIGN FILLS, USE THE NEXT GREATER TABULATED DESIGN FILL, EXCEPT FOR DESIGN FILLS BETWEEN 2 FEET AND 4 FEET. FOR DESIGN FILLS BETWEEN 2 FEET AND 4 FEET USE THE GREATER MEMBER THICKNESS, AREA OF REINFORCEMENT AND BAR DIMENSIONS FROM THE 2 FEET AND 4 FEET TABULATED DESIGN FILLS. AREA OF REINFORCEMENT EQUALS BAR AREA PER FOOT SPACING.

SPECIAL DESIGNS ARE REQUIRED WHEN THE DESIGN FILL IS LESS THAN 1 FOOT OR GREATER THAN 50 FEET.

DIMENSIONS ARE IN INCHES UNLESS OTHERWISE SPECIFIED.

DESIGN FILLS ARE MEASURED FROM THE TOP OF TOP SLAB TO THE TOP OF EARTH FILL OR ROADWAY.

CULVERTS MEET STRENGTH AND SERVICEABILITY REQUIREMENTS FOR THE DESIGN VEHICULAR LIVE LOAD HL-93 MINUS THE LANE LOAD.


MISSOURI HIGHWAYS AND TRANSPORTATION COMMISSION
105 WEST CAPITOL
JEFFERSON CITY, MO 65102
1-888-ASK-MODOT (1-888-275-6636)


STATE OF MISSOURI — DENNIS W. HECKMANN — NUMBER PE-27141 — PROFESSIONAL ENGINEER
THIS SHEET HAS BEEN SIGNED, SEALED AND DATED ELECTRONICALLY.

# CONCRETE TRIPLE BOX CULVERT

MEMBER THICKNESS
BAR SIZE, SPACING & DIMENSIONS

SPAN (S): 4 FEET
HEIGHT (HT): 2 THRU 5 FEET

DATE EFFECTIVE: 12/01/2011
DATE PREPARED: 9/29/2011

703.87

SHEET NO. 2 OF 27

IF A SEAL IS PRESENT ON THIS SHEET IT HAS BEEN ELECTRONICALLY SEALED AND DATED.

SPAN (S) = 4 FT  HEIGHT (HT) = 6 FT OR 7 FT

| DESIGN FILL | MEMBER THICKNESS | | | | TOP SLAB BARS | | | | | | | | | | | | | | BOTTOM SLAB BARS | | | | | | | | | | WALL BARS | | | | |
|---|---|---|---|---|---|---|---|---|---|---|---|---|---|---|---|---|---|---|---|---|---|---|---|---|---|---|---|---|---|---|---|---|---|
| | | | | | A1 BARS | | J3 BARS | | | | | H1 BARS | | | | H2 BARS | | | | A2 BARS | | J4 BARS | | | | H3 BARS | | | | B1 BARS | | B2 BARS | |
| | TS | BS | TX | TI | SIZE | SPA. | SIZE | SPA. | C1 | K2 HT=6′ | K2 HT=7′ | SIZE | SPA. | C5 | O8 | SIZE | SPA. | C6 | O9 | SIZE | SPA. | SIZE | SPA. | C4 | K3 HT=6′ | K3 HT=7′ | SIZE | SPA. | C7 | O10 | SIZE | SPA. | SIZE | SPA. | G1 |
| 1 FT | 10 | 8 | 8 | 8 | 4 | 6.5 | 4 | 10.5 | 30.3 | 26.0 | 26.0 | 4 | 24 | 47.5 | 36.5 | 4 | 24 | 22.0 | 21.0 | 4 | 12 | 4 | 9 | 42.0 | 76 | 88 | 4 | 11.5 | 40.0 | 28.0 | 5 | 12 | 5 | 12 | 12 |
| 2 FT | 10 | 8 | 8 | 8 | 4 | 6.5 | 4 | 10.5 | 30.3 | 26.0 | 26.0 | 4 | 24 | 47.5 | 36.5 | 4 | 24 | 21.0 | 21.0 | 4 | 12 | 4 | 8.5 | 42.0 | 76 | 88 | 4 | 11 | 40.0 | 28.0 | 5 | 12 | 5 | 12 | 12 |
| 4 FT | 8 | 8 | 8 | 8 | 4 | 12 | 4 | 10 | 30.3 | 24.0 | 24.0 | 4 | 24 | 47.5 | 37.0 | 4 | 24 | 20.0 | 20.0 | 4 | 12 | 4 | 7.5 | 42.0 | 76 | 88 | 4 | 11 | 29.0 | 27.0 | 5 | 12 | 5 | 12 | 12 |
| 6 FT | 8 | 8 | 8 | 8 | 4 | 12 | 4 | 10 | 30.3 | 24.0 | 24.0 | 4 | 24 | 47.5 | 29.0 | 4 | 24 | 19.0 | 19.0 | 4 | 12 | 4 | 7 | 42.0 | 76 | 88 | 4 | 10 | 27.0 | 26.0 | 5 | 12 | 5 | 12 | 12 |
| 8 FT | 8 | 8 | 8 | 8 | 4 | 12 | 4 | 9 | 30.3 | 24.0 | 24.0 | 4 | 24 | 47.5 | 28.0 | 4 | 24 | 19.0 | 19.0 | 4 | 12 | 4 | 6.5 | 42.0 | 76 | 88 | 4 | 9.5 | 26.0 | 26.0 | 5 | 12 | 5 | 12 | 0 |
| 10 FT | 8 | 8 | 8 | 8 | 4 | 12 | 4 | 8 | 43.1 | 24.0 | 24.0 | 4 | 24 | 28.0 | 27.0 | 4 | 24 | 18.0 | 19.0 | 4 | 12 | 4 | 6.5 | 40.6 | 76 | 88 | 4 | 9 | 25.0 | 26.0 | 5 | 12 | 5 | 12 | 0 |
| 12 FT | 8 | 8 | 8 | 8 | 4 | 12 | 4 | 7.5 | 40.5 | 24.0 | 24.0 | 4 | 24 | 27.0 | 26.0 | 4 | 24 | 18.0 | 19.0 | 4 | 11.5 | 4 | 6 | 39.1 | 76 | 88 | 4 | 8.5 | 25.0 | 26.0 | 5 | 12 | 5 | 12 | 0 |
| 14 FT | 8 | 8 | 8 | 8 | 4 | 12 | 4 | 6.5 | 39.3 | 24.0 | 24.0 | 4 | 23 | 26.0 | 26.0 | 4 | 23 | 18.0 | 19.0 | 4 | 10.5 | 5 | 6.5 | 38.4 | 76 | 88 | 4 | 8 | 25.0 | 26.0 | 5 | 12 | 5 | 12 | 0 |
| 16 FT | 8 | 8 | 8 | 8 | 4 | 12 | 4 | 6.5 | 35.5 | 24.0 | 24.0 | 4 | 23 | 24.0 | 25.0 | 4 | 23 | 18.0 | 19.0 | 4 | 10 | 5 | 6.5 | 35.4 | 76 | 88 | 4 | 7.5 | 24.0 | 26.0 | 5 | 12 | 5 | 12 | 0 |
| 18 FT | 8 | 8 | 8 | 8 | 4 | 11.5 | 4 | 6 | 35.3 | 24.0 | 24.0 | 4 | 21 | 24.0 | 25.0 | 4 | 21 | 18.0 | 18.0 | 4 | 9 | 5 | 6 | 35.1 | 76 | 88 | 4 | 7 | 24.0 | 26.0 | 5 | 12 | 5 | 12 | 0 |
| 20 FT | 8 | 8 | 8 | 8 | 4 | 10 | 5 | 6.5 | 35.0 | 24.0 | 28.0 | 4 | 19 | 24.0 | 25.0 | 4 | 19 | 18.0 | 18.0 | 4 | 8 | 6 | 6.5 | 38.0 | 76 | 88 | 4 | 6.5 | 24.0 | 26.0 | 5 | 12 | 5 | 12 | 0 |
| 22 FT | 8 | 9 | 8 | 8 | 4 | 9.5 | 5 | 6 | 34.6 | 24.0 | 28.0 | 4 | 18 | 24.0 | 25.0 | 4 | 18 | 18.0 | 18.0 | 4 | 8.5 | 5 | 6 | 36.1 | 77 | 89 | 4 | 8 | 25.0 | 26.0 | 5 | 12 | 5 | 11.5 | 0 |
| 24 FT | 8 | 9 | 9 | 8 | 4 | 8.5 | 5 | 6.5 | 34.1 | 24.0 | 28.0 | 4 | 16 | 24.0 | 25.0 | 4 | 16 | 18.0 | 18.0 | 4 | 8 | 5 | 7 | 35.6 | 77 | 89 | 4 | 7.5 | 25.0 | 26.0 | 5 | 12 | 5 | 11.5 | 0 |
| 26 FT | 8 | 9 | 9 | 8 | 4 | 8 | 5 | 6 | 34.0 | 24.0 | 28.0 | 4 | 15 | 24.0 | 25.0 | 4 | 15 | 18.0 | 18.0 | 4 | 7.5 | 5 | 6.5 | 35.5 | 77 | 89 | 4 | 7 | 25.0 | 26.0 | 5 | 12 | 5 | 11 | 0 |
| 28 FT | 8 | 10 | 9 | 8 | 4 | 7.5 | 6 | 7.5 | 36.8 | 24.0 | 28.0 | 4 | 14 | 24.0 | 25.0 | 4 | 14 | 18.0 | 18.0 | 4 | 7.5 | 5 | 7 | 36.6 | 78 | 90 | 4 | 7.5 | 25.0 | 26.0 | 5 | 12 | 5 | 10.5 | 0 |
| 30 FT | 9 | 10 | 9 | 8 | 4 | 8 | 5 | 6 | 35.0 | 25.0 | 29.0 | 4 | 15 | 24.0 | 25.0 | 4 | 15 | 18.0 | 18.0 | 4 | 7 | 5 | 6.5 | 36.4 | 78 | 90 | 4 | 7 | 25.0 | 26.0 | 5 | 12 | 5 | 10 | 0 |
| 32 FT | 9 | 10 | 9 | 8 | 4 | 7.5 | 5 | 6 | 35.0 | 25.0 | 29.0 | 4 | 14 | 24.0 | 25.0 | 4 | 14 | 18.0 | 18.0 | 4 | 6.5 | 5 | 6 | 36.3 | 78 | 90 | 4 | 6.5 | 25.0 | 26.0 | 5 | 12 | 5 | 9.5 | 0 |
| 34 FT | 9 | 11 | 9 | 8 | 4 | 7 | 5 | 6 | 34.9 | 25.0 | 29.0 | 4 | 13 | 24.0 | 25.0 | 4 | 13 | 18.0 | 18.0 | 4 | 7 | 5 | 6.5 | 37.4 | 79 | 91 | 4 | 7 | 25.0 | 26.0 | 5 | 12 | 5 | 9 | 0 |
| 36 FT | 10 | 11 | 9 | 8 | 4 | 7 | 5 | 6.5 | 35.9 | 26.0 | 30.0 | 4 | 15 | 24.0 | 25.0 | 4 | 15 | 18.0 | 18.0 | 4 | 7 | 5 | 6 | 37.0 | 79 | 91 | 4 | 7 | 25.0 | 26.0 | 5 | 12 | 5 | 8.5 | 0 |
| 38 FT | 10 | 11 | 9 | 8 | 4 | 7 | 5 | 6 | 35.8 | 26.0 | 30.0 | 4 | 14 | 24.0 | 25.0 | 4 | 14 | 18.0 | 18.0 | 4 | 6.5 | 6 | 7.5 | 40.0 | 79 | 91 | 4 | 6.5 | 25.0 | 26.0 | 5 | 12 | 5 | 8.5 | 0 |
| 40 FT | 10 | 12 | 9 | 8 | 4 | 6.5 | 5 | 6 | 35.6 | 26.0 | 30.0 | 4 | 13 | 24.0 | 25.0 | 4 | 13 | 18.0 | 18.0 | 4 | 6.5 | 5 | 6 | 38.3 | 80 | 92 | 4 | 7 | 25.0 | 26.0 | 5 | 12 | 5 | 8.5 | 0 |
| 42 FT | 10 | 12 | 9 | 8 | 4 | 6 | 5 | 6 | 35.6 | 30.0 | 30.0 | 4 | 12 | 24.0 | 25.0 | 4 | 12 | 18.0 | 18.0 | 4 | 6.5 | 6 | 7.5 | 41.1 | 80 | 92 | 4 | 6.5 | 25.0 | 26.0 | 5 | 12 | 5 | 8.5 | 0 |
| 44 FT | 11 | 12 | 9 | 8 | 4 | 6.5 | 6 | 7.5 | 39.5 | 31.0 | 35.0 | 4 | 14 | 24.0 | 25.0 | 4 | 14 | 18.0 | 18.0 | 4 | 6 | 6 | 7 | 40.9 | 80 | 92 | 4 | 6.5 | 25.0 | 26.0 | 5 | 12 | 5 | 8.5 | 0 |
| 46 FT | 11 | 13 | 9 | 8 | 4 | 6 | 6 | 6.5 | 39.4 | 31.0 | 35.0 | 4 | 13 | 24.0 | 25.0 | 4 | 13 | 18.0 | 18.0 | 4 | 6.5 | 6 | 7.5 | 42.0 | 81 | 93 | 4 | 6.5 | 26.0 | 26.0 | 5 | 12 | 5 | 8.5 | 0 |
| 48 FT | 11 | 13 | 10 | 8 | 4 | 6 | 5 | 6 | 36.3 | 27.0 | 31.0 | 4 | 13 | 23.0 | 25.0 | 4 | 13 | 18.0 | 18.0 | 4 | 6 | 5 | 6.5 | 38.4 | 81 | 93 | 4 | 6.5 | 25.0 | 26.0 | 5 | 12 | 5 | 8 | 0 |
| 50 FT | 12 | 13 | 11 | 8 | 4 | 6 | 5 | 7 | 37.0 | 28.0 | 32.0 | 4 | 14 | 23.0 | 25.0 | 4 | 14 | 18.0 | 18.0 | 4 | 6 | 5 | 7.5 | 37.9 | 81 | 93 | 4 | 6 | 25.0 | 26.0 | 5 | 12 | 5 | 7.5 | 0 |

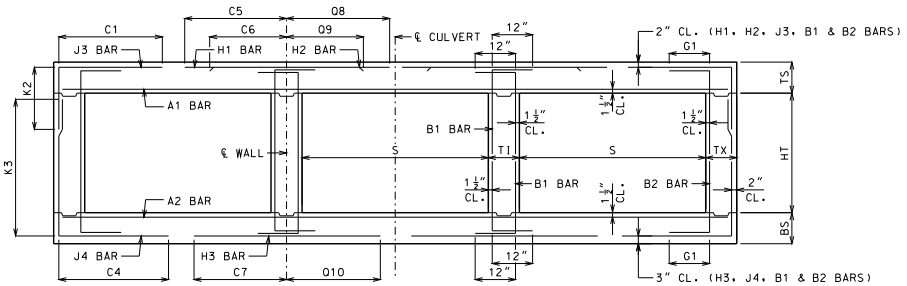


BAR DIMENSIONS DIAGRAM
SYMMETRICAL ABOUT ℄ CULVERT.

GENERAL NOTES:

IF DESIGN FILL IS BETWEEN TABULATED DESIGN FILLS, USE THE NEXT GREATER TABULATED DESIGN FILL, EXCEPT FOR DESIGN FILLS BETWEEN 2 FEET AND 4 FEET. FOR DESIGN FILLS BETWEEN 2 FEET AND 4 FEET USE THE GREATER MEMBER THICKNESS, AREA OF REINFORCEMENT AND BAR DIMENSIONS FROM THE 2 FEET AND 4 FEET TABULATED DESIGN FILLS. AREA OF REINFORCEMENT EQUALS BAR AREA PER FOOT SPACING.

SPECIAL DESIGNS ARE REQUIRED WHEN THE DESIGN FILL IS LESS THAN 1 FOOT OR GREATER THAN 50 FEET.

DIMENSIONS ARE IN INCHES UNLESS OTHERWISE SPECIFIED.

DESIGN FILLS ARE MEASURED FROM THE TOP OF TOP SLAB TO THE TOP OF EARTH FILL OR ROADWAY.

CULVERTS MEET STRENGTH AND SERVICEABILITY REQUIREMENTS FOR THE DESIGN VEHICULAR LIVE LOAD HL-93 MINUS THE LANE LOAD.


MISSOURI HIGHWAYS AND TRANSPORTATION COMMISSION
105 WEST CAPITOL
JEFFERSON CITY, MO 65102
1-888-ASK-MODOT (1-888-275-6636)


STATE OF MISSOURI
DENNIS W. HECKMAN
NUMBER PE-27141
PROFESSIONAL ENGINEER
THIS SHEET HAS BEEN SIGNED, SEALED AND DATED ELECTRONICALLY.

# CONCRETE TRIPLE BOX CULVERT

MEMBER THICKNESS
BAR SIZE, SPACING & DIMENSIONS

SPAN (S): 4 FEET
HEIGHT (HT): 6 THRU 7 FEET

DATE EFFECTIVE: 12/01/2011
DATE PREPARED: 9/29/2011

703.87

SHEET NO.
3 OF 27

IF A SEAL IS PRESENT ON THIS SHEET IT HAS BEEN ELECTRONICALLY SEALED AND DATED.

SPAN (S) = 5 FT  HEIGHT (HT) = 3 FT OR 4 FT

| DESIGN FILL | MEMBER THICKNESS | | | | TOP SLAB BARS | | | | | | | | | | | | | | BOTTOM SLAB BARS | | | | | | | | | | WALL BARS | | | | |
|---|---|---|---|---|---|---|---|---|---|---|---|---|---|---|---|---|---|---|---|---|---|---|---|---|---|---|---|---|---|---|---|---|---|
| | | | | | A1 BARS | | J3 BARS | | | K2 | | H1 BARS | | | | H2 BARS | | | | A2 BARS | | J4 BARS | | | K3 | | H3 BARS | | | | B1 BARS | | B2 BARS | |
| | TS | BS | TX | TI | SIZE | SPA. | SIZE | SPA. | C1 | HT=3′ | HT=4′ | SIZE | SPA. | C5 | O8 | SIZE | SPA. | C6 | O9 | SIZE | SPA. | SIZE | SPA. | C4 | HT=3′ | HT=4′ | SIZE | SPA. | C7 | O10 | SIZE | SPA. | SIZE | SPA. | G1 |
| 1 FT | 10 | 8 | 8 | 8 | 5 | 9 | 4 | 10.5 | 33.9 | 26.0 | 26.0 | 4 | 19 | 56.5 | 42.5 | 4 | 19 | 22.0 | 21.0 | 4 | 12 | 4 | 12 | 33.9 | 40 | 52 | 4 | 8.5 | 30.0 | 31.0 | 5 | 12 | 5 | 12 | 12 |
| 2 FT | 11 | 8 | 8 | 8 | 4 | 6 | 4 | 9.5 | 33.9 | 27.0 | 27.0 | 4 | 21 | 56.5 | 42.5 | 4 | 21 | 22.0 | 21.0 | 4 | 12 | 4 | 12 | 31.1 | 40 | 52 | 4 | 8.5 | 30.0 | 31.0 | 5 | 12 | 5 | 12 | 12 |
| 4 FT | 8 | 8 | 8 | 8 | 4 | 10.5 | 4 | 12 | 32.1 | 24.0 | 24.0 | 4 | 20 | 38.0 | 46.0 | 4 | 20 | 20.0 | 20.0 | 4 | 12 | 4 | 12 | 28.4 | 40 | 52 | 4 | 8.5 | 29.0 | 30.0 | 5 | 12 | 5 | 12 | 12 |
| 6 FT | 8 | 8 | 8 | 8 | 4 | 12 | 4 | 12 | 29.3 | 24.0 | 24.0 | 4 | 21 | 31.0 | 34.0 | 4 | 21 | 20.0 | 20.0 | 4 | 12 | 4 | 12 | 27.0 | 40 | 52 | 4 | 8 | 28.0 | 29.0 | 5 | 12 | 5 | 12 | 12 |
| 8 FT | 8 | 8 | 8 | 8 | 4 | 12 | 4 | 12 | 27.5 | 24.0 | 24.0 | 4 | 20 | 30.0 | 31.0 | 4 | 20 | 19.0 | 19.0 | 4 | 11 | 4 | 11 | 26.3 | 40 | 52 | 4 | 7 | 28.0 | 29.0 | 5 | 12 | 5 | 12 | 0 |
| 10 FT | 8 | 8 | 8 | 8 | 4 | 11 | 4 | 12 | 26.6 | 24.0 | 24.0 | 4 | 18 | 29.0 | 30.0 | 4 | 18 | 19.0 | 19.0 | 4 | 9.5 | 4 | 10.5 | 25.6 | 40 | 52 | 4 | 6.5 | 27.0 | 29.0 | 5 | 12 | 5 | 12 | 0 |
| 12 FT | 8 | 8 | 8 | 8 | 4 | 10 | 4 | 10.5 | 26.1 | 24.0 | 24.0 | 4 | 16 | 28.0 | 30.0 | 4 | 16 | 19.0 | 19.0 | 4 | 8 | 4 | 9.5 | 25.3 | 40 | 52 | 4 | 6 | 27.0 | 29.0 | 5 | 12 | 5 | 12 | 0 |
| 14 FT | 8 | 8 | 8 | 8 | 4 | 8.5 | 4 | 9.5 | 25.6 | 24.0 | 24.0 | 4 | 14 | 28.0 | 29.0 | 4 | 14 | 19.0 | 19.0 | 4 | 7 | 4 | 8.5 | 25.0 | 40 | 52 | 5 | 7 | 27.0 | 29.0 | 5 | 12 | 5 | 12 | 0 |
| 16 FT | 8 | 9 | 8 | 8 | 4 | 8 | 4 | 8.5 | 25.6 | 24.0 | 24.0 | 4 | 13 | 28.0 | 29.0 | 4 | 13 | 19.0 | 19.0 | 4 | 7 | 4 | 11 | 24.3 | 41 | 53 | 4 | 6 | 27.0 | 29.0 | 5 | 12 | 5 | 12 | 0 |
| 18 FT | 8 | 9 | 8 | 8 | 4 | 7.5 | 4 | 8 | 24.8 | 24.0 | 24.0 | 4 | 12 | 27.0 | 28.0 | 4 | 12 | 19.0 | 19.0 | 4 | 7 | 4 | 10.5 | 23.5 | 41 | 53 | 4 | 6 | 27.0 | 29.0 | 5 | 12 | 5 | 12 | 0 |
| 20 FT | 8 | 9 | 8 | 8 | 4 | 7 | 4 | 7.5 | 24.6 | 24.0 | 24.0 | 5 | 17 | 27.0 | 28.0 | 5 | 17 | 19.0 | 19.0 | 4 | 6 | 4 | 9.5 | 23.5 | 41 | 53 | 5 | 7 | 27.0 | 29.0 | 5 | 12 | 5 | 12 | 0 |
| 22 FT | 9 | 10 | 8 | 8 | 4 | 7 | 4 | 9 | 24.3 | 25.0 | 25.0 | 4 | 12 | 27.0 | 29.0 | 4 | 12 | 19.0 | 19.0 | 4 | 6.5 | 4 | 12 | 23.1 | 42 | 54 | 4 | 6 | 27.0 | 29.0 | 5 | 12 | 5 | 12 | 0 |
| 24 FT | 9 | 11 | 8 | 8 | 4 | 6.5 | 4 | 8 | 24.4 | 25.0 | 25.0 | 5 | 17 | 27.0 | 29.0 | 5 | 17 | 19.0 | 19.0 | 4 | 6.5 | 4 | 10.5 | 22.6 | 43 | 55 | 4 | 6 | 26.0 | 30.0 | 5 | 12 | 5 | 12 | 0 |
| 26 FT | 10 | 11 | 8 | 8 | 4 | 6.5 | 4 | 8.5 | 23.9 | 26.0 | 26.0 | 5 | 18 | 26.0 | 29.0 | 5 | 18 | 19.0 | 19.0 | 4 | 6 | 4 | 10.5 | 22.9 | 43 | 55 | 5 | 8 | 26.0 | 29.0 | 5 | 12 | 5 | 12 | 0 |
| 28 FT | 10 | 11 | 8 | 8 | 4 | 6 | 4 | 8 | 23.9 | 26.0 | 26.0 | 5 | 17 | 26.0 | 29.0 | 5 | 17 | 19.0 | 19.0 | 5 | 8.5 | 4 | 10.5 | 22.9 | 43 | 55 | 5 | 8 | 26.0 | 29.0 | 5 | 12 | 5 | 12 | 0 |
| 30 FT | 10 | 12 | 8 | 8 | 5 | 8 | 4 | 7 | 24.0 | 26.0 | 26.0 | 5 | 16 | 26.0 | 29.0 | 5 | 16 | 19.0 | 19.0 | 5 | 9 | 4 | 9.5 | 22.5 | 44 | 56 | 5 | 8.5 | 26.0 | 30.0 | 5 | 12 | 5 | 12 | 0 |
| 32 FT | 11 | 12 | 8 | 8 | 5 | 9 | 4 | 8 | 23.6 | 27.0 | 27.0 | 5 | 17 | 26.0 | 29.0 | 5 | 17 | 19.0 | 19.0 | 5 | 8.5 | 4 | 9.5 | 22.8 | 44 | 56 | 5 | 8 | 26.0 | 30.0 | 5 | 12 | 5 | 12 | 0 |
| 34 FT | 11 | 13 | 8 | 8 | 5 | 8.5 | 4 | 7 | 23.8 | 27.0 | 27.0 | 5 | 16 | 26.0 | 29.0 | 5 | 16 | 19.0 | 19.0 | 5 | 8.5 | 4 | 8.5 | 22.5 | 45 | 57 | 5 | 8.5 | 26.0 | 30.0 | 5 | 12 | 5 | 12 | 0 |
| 36 FT | 12 | 13 | 8 | 8 | 5 | 8.5 | 4 | 8 | 23.5 | 28.0 | 28.0 | 5 | 17 | 26.0 | 29.0 | 5 | 17 | 19.0 | 19.0 | 5 | 8 | 4 | 8.5 | 22.8 | 45 | 57 | 5 | 8 | 26.0 | 30.0 | 5 | 12 | 5 | 12 | 0 |
| 38 FT | 12 | 14 | 8 | 8 | 5 | 8 | 4 | 7 | 23.6 | 28.0 | 28.0 | 5 | 16 | 26.0 | 29.0 | 5 | 16 | 19.0 | 19.0 | 5 | 8 | 4 | 7.5 | 22.6 | 46 | 58 | 5 | 8.5 | 26.0 | 30.0 | 5 | 12 | 5 | 12 | 0 |
| 40 FT | 13 | 14 | 8 | 8 | 5 | 8 | 4 | 7.5 | 23.4 | 29.0 | 29.0 | 5 | 16 | 26.0 | 29.0 | 5 | 16 | 19.0 | 19.0 | 5 | 8 | 4 | 7.5 | 22.8 | 46 | 58 | 5 | 8 | 26.0 | 30.0 | 5 | 12 | 5 | 12 | 0 |
| 42 FT | 13 | 14 | 8 | 8 | 5 | 7.5 | 4 | 7.5 | 23.4 | 29.0 | 29.0 | 5 | 16 | 26.0 | 29.0 | 5 | 16 | 19.0 | 19.0 | 5 | 7.5 | 4 | 7.5 | 22.8 | 46 | 58 | 5 | 7.5 | 26.0 | 30.0 | 5 | 12 | 5 | 12 | 0 |
| 44 FT | 13 | 15 | 8 | 8 | 5 | 7.5 | 4 | 7 | 23.6 | 29.0 | 29.0 | 5 | 15 | 26.0 | 29.0 | 5 | 15 | 19.0 | 19.0 | 5 | 7.5 | 4 | 7 | 22.8 | 47 | 59 | 5 | 8 | 26.0 | 30.0 | 5 | 12 | 5 | 12 | 0 |
| 46 FT | 14 | 15 | 8 | 8 | 5 | 7.5 | 4 | 7 | 23.4 | 30.0 | 30.0 | 5 | 16 | 25.0 | 29.0 | 5 | 16 | 18.0 | 19.0 | 5 | 7.5 | 4 | 7 | 22.9 | 47 | 59 | 5 | 7.5 | 26.0 | 30.0 | 5 | 12 | 5 | 12 | 0 |
| 48 FT | 14 | 15 | 8 | 8 | 5 | 7 | 4 | 7 | 23.4 | 30.0 | 30.0 | 5 | 15 | 25.0 | 29.0 | 5 | 15 | 18.0 | 19.0 | 5 | 7 | 4 | 7 | 22.9 | 47 | 59 | 5 | 7 | 26.0 | 30.0 | 5 | 12 | 5 | 12 | 0 |
| 50 FT | 14 | 16 | 8 | 8 | 5 | 7 | 4 | 6.5 | 23.6 | 30.0 | 30.0 | 5 | 15 | 25.0 | 29.0 | 5 | 15 | 18.0 | 19.0 | 5 | 7 | 4 | 6.5 | 22.9 | 48 | 60 | 5 | 7.5 | 26.0 | 30.0 | 5 | 12 | 5 | 12 | 0 |

SPAN (S) = 5 FT  HEIGHT (HT) = 5 FT OR 6 FT

| DESIGN FILL | MEMBER THICKNESS | | | | TOP SLAB BARS | | | | | | | | | | | | | | BOTTOM SLAB BARS | | | | | | | | | | WALL BARS | | | | |
|---|---|---|---|---|---|---|---|---|---|---|---|---|---|---|---|---|---|---|---|---|---|---|---|---|---|---|---|---|---|---|---|---|---|
| | | | | | A1 BARS | | J3 BARS | | | K2 | | H1 BARS | | | | H2 BARS | | | | A2 BARS | | J4 BARS | | | K3 | | H3 BARS | | | | B1 BARS | | B2 BARS | |
| | TS | BS | TX | TI | SIZE | SPA. | SIZE | SPA. | C1 | HT=5′ | HT=6′ | SIZE | SPA. | C5 | O8 | SIZE | SPA. | C6 | O9 | SIZE | SPA. | SIZE | SPA. | C4 | HT=5′ | HT=6′ | SIZE | SPA. | C7 | O10 | SIZE | SPA. | SIZE | SPA. | G1 |
| 1 FT | 11 | 8 | 8 | 8 | 4 | 6 | 4 | 9.5 | 33.9 | 27.0 | 27.0 | 4 | 22 | 56.5 | 42.5 | 4 | 22 | 23.0 | 23.0 | 4 | 12 | 4 | 10 | 47.5 | 64 | 76 | 4 | 8.5 | 31.0 | 31.0 | 5 | 12 | 5 | 12 | 12 |
| 2 FT | 11 | 8 | 8 | 8 | 4 | 6 | 4 | 9.5 | 33.9 | 27.0 | 27.0 | 4 | 21 | 56.5 | 42.5 | 4 | 21 | 22.0 | 22.0 | 4 | 11 | 4 | 9.5 | 42.8 | 64 | 76 | 4 | 8 | 30.0 | 31.0 | 5 | 12 | 5 | 12 | 12 |
| 4 FT | 8 | 8 | 8 | 8 | 4 | 10 | 4 | 10 | 33.9 | 24.0 | 24.0 | 4 | 20 | 56.5 | 46.0 | 4 | 20 | 21.0 | 21.0 | 4 | 12 | 4 | 9 | 38.9 | 64 | 76 | 4 | 8.5 | 29.0 | 30.0 | 5 | 12 | 5 | 12 | 12 |
| 6 FT | 8 | 8 | 8 | 8 | 4 | 12 | 4 | 10.5 | 38.3 | 24.0 | 24.0 | 4 | 21 | 33.0 | 35.0 | 4 | 21 | 20.0 | 20.0 | 4 | 12 | 4 | 8.5 | 35.5 | 64 | 76 | 4 | 7.5 | 28.0 | 30.0 | 5 | 12 | 5 | 12 | 12 |
| 8 FT | 8 | 8 | 8 | 8 | 4 | 12 | 4 | 10 | 34.4 | 24.0 | 24.0 | 4 | 20 | 30.0 | 31.0 | 4 | 20 | 19.0 | 20.0 | 4 | 10.5 | 4 | 8 | 33.5 | 64 | 76 | 4 | 7 | 28.0 | 29.0 | 5 | 12 | 5 | 12 | 0 |
| 10 FT | 8 | 8 | 8 | 8 | 4 | 10.5 | 4 | 9 | 32.9 | 24.0 | 24.0 | 4 | 18 | 29.0 | 30.0 | 4 | 18 | 19.0 | 19.0 | 4 | 9 | 4 | 7.5 | 32.3 | 64 | 76 | 4 | 6.5 | 27.0 | 29.0 | 5 | 12 | 5 | 12 | 0 |
| 12 FT | 8 | 8 | 8 | 8 | 4 | 9.5 | 4 | 8 | 31.9 | 24.0 | 24.0 | 4 | 16 | 28.0 | 30.0 | 4 | 16 | 19.0 | 19.0 | 4 | 7.5 | 4 | 7 | 31.3 | 64 | 76 | 4 | 6 | 27.0 | 29.0 | 5 | 12 | 5 | 12 | 0 |
| 14 FT | 8 | 8 | 8 | 8 | 4 | 8.5 | 4 | 7 | 31.1 | 24.0 | 24.0 | 4 | 14 | 28.0 | 29.0 | 4 | 14 | 19.0 | 19.0 | 4 | 7 | 4 | 6 | 30.8 | 64 | 76 | 5 | 7 | 27.0 | 29.0 | 5 | 12 | 5 | 12 | 0 |
| 16 FT | 8 | 9 | 8 | 8 | 4 | 8 | 4 | 6.5 | 30.8 | 24.0 | 24.0 | 4 | 13 | 28.0 | 29.0 | 4 | 13 | 19.0 | 19.0 | 4 | 7 | 4 | 7 | 30.9 | 65 | 77 | 4 | 6 | 27.0 | 29.0 | 5 | 12 | 5 | 12 | 0 |
| 18 FT | 8 | 9 | 8 | 8 | 4 | 7.5 | 4 | 6.5 | 29.1 | 24.0 | 24.0 | 4 | 12 | 27.0 | 28.0 | 4 | 12 | 19.0 | 19.0 | 4 | 6.5 | 4 | 7 | 29.1 | 65 | 77 | 4 | 6 | 27.0 | 29.0 | 5 | 12 | 5 | 12 | 0 |
| 20 FT | 8 | 9 | 8 | 8 | 4 | 7 | 5 | 7 | 29.0 | 24.0 | 24.0 | 5 | 17 | 27.0 | 28.0 | 5 | 17 | 19.0 | 19.0 | 4 | 6 | 4 | 6.5 | 29.0 | 65 | 77 | 5 | 7.5 | 27.0 | 29.0 | 5 | 12 | 5 | 12 | 0 |
| 22 FT | 9 | 10 | 8 | 8 | 4 | 7 | 4 | 6.5 | 29.1 | 25.0 | 25.0 | 4 | 12 | 26.0 | 29.0 | 4 | 12 | 19.0 | 19.0 | 4 | 6 | 4 | 7.5 | 29.3 | 66 | 78 | 4 | 6 | 27.0 | 29.0 | 5 | 12 | 5 | 12 | 0 |
| 24 FT | 9 | 10 | 8 | 8 | 4 | 6.5 | 4 | 6 | 29.1 | 25.0 | 25.0 | 5 | 17 | 26.0 | 29.0 | 5 | 17 | 19.0 | 19.0 | 5 | 8.5 | 4 | 7 | 29.1 | 66 | 78 | 5 | 7.5 | 27.0 | 29.0 | 5 | 12 | 5 | 12 | 0 |
| 26 FT | 10 | 11 | 8 | 8 | 4 | 6.5 | 5 | 8 | 29.4 | 26.0 | 26.0 | 4 | 12 | 26.0 | 29.0 | 4 | 12 | 19.0 | 19.0 | 4 | 6 | 4 | 6.5 | 29.4 | 67 | 79 | 5 | 8.5 | 26.0 | 29.0 | 5 | 12 | 5 | 12 | 0 |
| 28 FT | 10 | 11 | 8 | 8 | 4 | 6 | 5 | 7.5 | 29.3 | 26.0 | 26.0 | 5 | 17 | 26.0 | 29.0 | 5 | 17 | 19.0 | 19.0 | 5 | 8.5 | 4 | 6 | 29.4 | 67 | 79 | 5 | 8 | 26.0 | 29.0 | 5 | 12 | 5 | 12 | 0 |
| 30 FT | 10 | 12 | 8 | 8 | 5 | 8.5 | 5 | 7.5 | 29.3 | 26.0 | 26.0 | 5 | 16 | 26.0 | 29.0 | 5 | 16 | 19.0 | 19.0 | 5 | 9 | 4 | 6 | 29.5 | 68 | 80 | 5 | 8.5 | 26.0 | 30.0 | 5 | 12 | 5 | 12 | 0 |
| 32 FT | 11 | 12 | 8 | 8 | 5 | 9 | 5 | 8 | 29.5 | 27.0 | 31.0 | 5 | 17 | 26.0 | 29.0 | 5 | 17 | 19.0 | 19.0 | 5 | 8.5 | 5 | 8 | 29.6 | 68 | 80 | 5 | 8 | 26.0 | 30.0 | 5 | 12 | 5 | 12 | 0 |
| 34 FT | 11 | 13 | 8 | 8 | 5 | 8.5 | 5 | 7.5 | 29.5 | 27.0 | 31.0 | 5 | 16 | 26.0 | 29.0 | 5 | 16 | 19.0 | 19.0 | 5 | 8.5 | 5 | 8.5 | 29.8 | 69 | 81 | 5 | 8.5 | 26.0 | 30.0 | 5 | 12 | 5 | 11.5 | 0 |
| 36 FT | 12 | 13 | 8 | 8 | 5 | 8.5 | 5 | 8 | 29.8 | 28.0 | 32.0 | 5 | 17 | 26.0 | 29.0 | 5 | 17 | 18.0 | 19.0 | 5 | 8 | 5 | 8 | 29.9 | 69 | 81 | 5 | 8 | 26.0 | 30.0 | 5 | 12 | 5 | 11 | 0 |
| 38 FT | 12 | 14 | 8 | 8 | 5 | 8 | 5 | 7.5 | 29.8 | 28.0 | 32.0 | 5 | 16 | 26.0 | 29.0 | 5 | 16 | 18.0 | 19.0 | 5 | 8.5 | 5 | 8.5 | 30.1 | 70 | 82 | 5 | 8.5 | 26.0 | 30.0 | 5 | 12 | 5 | 10 | 0 |
| 40 FT | 12 | 14 | 8 | 8 | 5 | 7.5 | 5 | 7 | 29.8 | 28.0 | 32.0 | 5 | 15 | 26.0 | 29.0 | 5 | 15 | 18.0 | 19.0 | 5 | 8 | 5 | 8 | 30.0 | 70 | 82 | 5 | 8 | 26.0 | 30.0 | 5 | 12 | 5 | 9.5 | 0 |
| 42 FT | 13 | 14 | 8 | 8 | 5 | 8 | 5 | 7.5 | 29.9 | 29.0 | 33.0 | 5 | 16 | 26.0 | 29.0 | 5 | 16 | 18.0 | 19.0 | 5 | 7.5 | 5 | 7.5 | 30.1 | 70 | 82 | 5 | 7.5 | 26.0 | 30.0 | 5 | 12 | 5 | 9.5 | 0 |
| 44 FT | 13 | 15 | 8 | 8 | 5 | 7.5 | 5 | 7 | 30.0 | 29.0 | 33.0 | 5 | 15 | 26.0 | 29.0 | 5 | 15 | 18.0 | 19.0 | 5 | 8 | 5 | 8 | 30.4 | 71 | 83 | 5 | 8 | 27.0 | 30.0 | 5 | 12 | 5 | 9.5 | 0 |
| 46 FT | 14 | 15 | 8 | 8 | 5 | 7.5 | 5 | 6.5 | 30.1 | 30.0 | 34.0 | 5 | 16 | 26.0 | 28.0 | 5 | 16 | 18.0 | 19.0 | 5 | 7.5 | 5 | 7.5 | 30.5 | 71 | 83 | 5 | 7.5 | 27.0 | 30.0 | 5 | 12 | 5 | 9.5 | 0 |
| 48 FT | 14 | 15 | 9 | 8 | 5 | 7.5 | 5 | 8 | 30.6 | 30.0 | 34.0 | 5 | 16 | 26.0 | 28.0 | 5 | 16 | 18.0 | 19.0 | 5 | 7.5 | 5 | 8 | 30.8 | 71 | 83 | 5 | 7.5 | 27.0 | 30.0 | 5 | 12 | 5 | 9 | 0 |
| 50 FT | 14 | 16 | 9 | 8 | 5 | 7 | 5 | 7.5 | 30.8 | 30.0 | 34.0 | 5 | 15 | 26.0 | 28.0 | 5 | 15 | 18.0 | 19.0 | 5 | 7.5 | 5 | 8 | 31.0 | 72 | 84 | 5 | 7.5 | 27.0 | 30.0 | 5 | 12 | 5 | 8.5 | 0 |

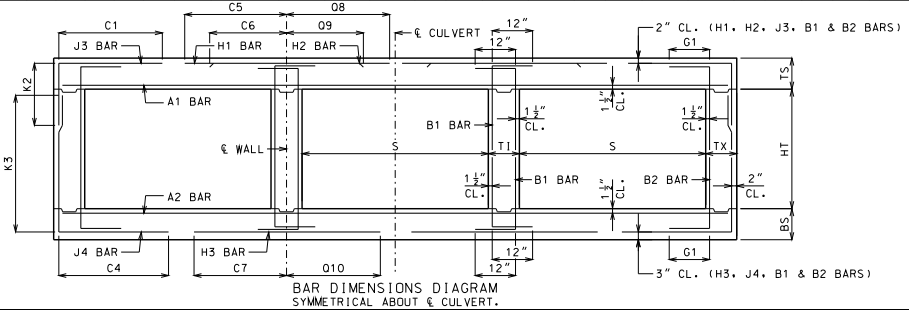


BAR DIMENSIONS DIAGRAM
SYMMETRICAL ABOUT ℄ CULVERT.

GENERAL NOTES:

IF DESIGN FILL IS BETWEEN TABULATED DESIGN FILLS, USE THE NEXT GREATER TABULATED DESIGN FILL, EXCEPT FOR DESIGN FILLS BETWEEN 2 FEET AND 4 FEET. FOR DESIGN FILLS BETWEEN 2 FEET AND 4 FEET USE THE GREATER MEMBER THICKNESS, AREA OF REINFORCEMENT AND BAR DIMENSIONS FROM THE 2 FEET AND 4 FEET TABULATED DESIGN FILLS. AREA OF REINFORCEMENT EQUALS BAR AREA PER FOOT SPACING.

SPECIAL DESIGNS ARE REQUIRED WHEN THE DESIGN FILL IS LESS THAN 1 FOOT OR GREATER THAN 50 FEET.

DIMENSIONS ARE IN INCHES UNLESS OTHERWISE SPECIFIED.

DESIGN FILLS ARE MEASURED FROM THE TOP OF TOP SLAB TO THE TOP OF EARTH FILL OR ROADWAY.

CULVERTS MEET STRENGTH AND SERVICEABILITY REQUIREMENTS FOR THE DESIGN VEHICULAR LIVE LOAD HL-93 MINUS THE LANE LOAD.


MISSOURI HIGHWAYS AND TRANSPORTATION COMMISSION
105 WEST CAPITOL
JEFFERSON CITY, MO 65102
1-888-ASK-MODOT (1-888-275-6636)


STATE OF MISSOURI — DENNIS W. HECKMANN — NUMBER PE-27141 — PROFESSIONAL ENGINEER
THIS SHEET WAS SIGNED, SEALED AND DATED ELECTRONICALLY.

# CONCRETE TRIPLE BOX CULVERT

MEMBER THICKNESS
BAR SIZE, SPACING & DIMENSIONS

SPAN (S): 5 FEET
HEIGHT (HT): 3 THRU 6 FEET

DATE EFFECTIVE: 12/01/2011
DATE PREPARED: 9/29/2011

703.87

SHEET NO. 4 OF 27

IF A SEAL IS PRESENT ON THIS SHEET IT HAS BEEN ELECTRONICALLY SEALED AND DATED.

SPAN (S) = 5 FT  HEIGHT (HT) = 7 FT OR 8 FT

| DESIGN FILL | MEMBER THICKNESS | | | | TOP SLAB BARS | | | | | | | | | | | | | | BOTTOM SLAB BARS | | | | | | | | | | WALL BARS | | | | |
|---|---|---|---|---|---|---|---|---|---|---|---|---|---|---|---|---|---|---|---|---|---|---|---|---|---|---|---|---|---|---|---|---|---|
| | | | | | A1 BARS | | J3 BARS | | | | | H1 BARS | | | | H2 BARS | | | | A2 BARS | | J4 BARS | | | | | H3 BARS | | | | B1 BARS | | B2 BARS | |
| | TS | BS | TX | TI | SIZE | SPA. | SIZE | SPA. | C1 | K2 HT=7′ | K2 HT=8′ | SIZE | SPA. | C5 | O8 | SIZE | SPA. | C6 | O9 | SIZE | SPA. | SIZE | SPA. | C4 | K3 HT=7′ | K3 HT=8′ | SIZE | SPA. | C7 | O10 | SIZE | SPA. | SIZE | SPA. | G1 |
| 1 FT | 11 | 8 | 8 | 8 | 4 | 6 | 4 | 9 | 33.9 | 27.0 | 27.0 | 4 | 22 | 56.5 | 42.5 | 4 | 22 | 23.0 | 23.0 | 4 | 11 | 4 | 7 | 48.0 | 88 | 100 | 4 | 8 | 46.0 | 31.0 | 5 | 12 | 5 | 12 | 12 |
| 2 FT | 11 | 8 | 8 | 8 | 4 | 6 | 4 | 8.5 | 33.9 | 27.0 | 27.0 | 4 | 21 | 56.5 | 42.5 | 4 | 21 | 23.0 | 23.0 | 4 | 10.5 | 4 | 6.5 | 48.0 | 88 | 100 | 4 | 8 | 32.0 | 31.0 | 5 | 12 | 5 | 12 | 12 |
| 4 FT | 8 | 8 | 8 | 8 | 4 | 9.5 | 4 | 7 | 33.9 | 24.0 | 24.0 | 4 | 20 | 56.5 | 46.0 | 4 | 20 | 21.0 | 21.0 | 4 | 11.5 | 4 | 6 | 48.0 | 88 | 100 | 4 | 8 | 31.0 | 30.0 | 5 | 12 | 5 | 12 | 12 |
| 6 FT | 8 | 8 | 8 | 8 | 4 | 12 | 4 | 7 | 33.9 | 24.0 | 24.0 | 4 | 21 | 56.5 | 35.0 | 4 | 21 | 20.0 | 20.0 | 4 | 11 | 5 | 6 | 48.0 | 88 | 100 | 4 | 7.5 | 29.0 | 30.0 | 5 | 12 | 5 | 12 | 12 |
| 8 FT | 8 | 8 | 8 | 8 | 4 | 12 | 4 | 6.5 | 51.8 | 24.0 | 24.0 | 4 | 20 | 34.0 | 31.0 | 4 | 20 | 19.0 | 20.0 | 4 | 10 | 5 | 6 | 46.0 | 88 | 100 | 4 | 7 | 28.0 | 29.0 | 5 | 12 | 5 | 12 | 0 |
| 10 FT | 8 | 8 | 9 | 8 | 4 | 11 | 4 | 7 | 43.8 | 24.0 | 24.0 | 4 | 18 | 30.0 | 30.0 | 4 | 18 | 19.0 | 20.0 | 4 | 9 | 4 | 6 | 41.6 | 88 | 100 | 4 | 6.5 | 28.0 | 29.0 | 5 | 12 | 5 | 12 | 0 |
| 12 FT | 8 | 8 | 9 | 8 | 4 | 9.5 | 4 | 6 | 41.3 | 24.0 | 24.0 | 4 | 16 | 29.0 | 30.0 | 4 | 16 | 19.0 | 19.0 | 4 | 8 | 5 | 6 | 40.4 | 88 | 100 | 4 | 6 | 27.0 | 29.0 | 5 | 12 | 5 | 12 | 0 |
| 14 FT | 8 | 9 | 9 | 8 | 4 | 9 | 5 | 7 | 39.9 | 24.0 | 28.0 | 4 | 15 | 28.0 | 29.0 | 4 | 15 | 19.0 | 19.0 | 4 | 8 | 5 | 6.5 | 41.4 | 89 | 101 | 4 | 6.5 | 27.0 | 29.0 | 5 | 12 | 5 | 11.5 | 0 |
| 16 FT | 8 | 9 | 9 | 8 | 4 | 8 | 5 | 6 | 39.1 | 24.0 | 28.0 | 4 | 13 | 28.0 | 29.0 | 4 | 13 | 19.0 | 19.0 | 4 | 7 | 5 | 6 | 40.8 | 89 | 101 | 4 | 6 | 27.0 | 29.0 | 5 | 12 | 5 | 11 | 0 |
| 18 FT | 8 | 9 | 9 | 8 | 4 | 7.5 | 5 | 6 | 36.5 | 24.0 | 28.0 | 4 | 13 | 26.0 | 28.0 | 4 | 13 | 19.0 | 19.0 | 4 | 7 | 5 | 6 | 38.1 | 89 | 101 | 4 | 6 | 27.0 | 29.0 | 5 | 12 | 5 | 11.5 | 0 |
| 20 FT | 8 | 9 | 9 | 8 | 4 | 7 | 6 | 7 | 39.1 | 24.0 | 32.0 | 5 | 18 | 26.0 | 28.0 | 5 | 18 | 19.0 | 19.0 | 4 | 6 | 6 | 7 | 40.9 | 89 | 101 | 5 | 7.5 | 27.0 | 29.0 | 5 | 12 | 5 | 10.5 | 0 |
| 22 FT | 8 | 10 | 9 | 8 | 4 | 6.5 | 6 | 7 | 38.8 | 24.0 | 28.0 | 5 | 17 | 27.0 | 28.0 | 5 | 17 | 19.0 | 20.0 | 4 | 6.5 | 5 | 6 | 39.0 | 90 | 102 | 5 | 8 | 27.0 | 29.0 | 5 | 12 | 5 | 10 | 0 |
| 24 FT | 9 | 11 | 9 | 8 | 4 | 6.5 | 5 | 6 | 37.0 | 25.0 | 29.0 | 5 | 18 | 26.0 | 28.0 | 5 | 18 | 19.0 | 19.0 | 4 | 6.5 | 5 | 6 | 39.8 | 91 | 103 | 4 | 6 | 27.0 | 29.0 | 5 | 12 | 5 | 9.5 | 0 |
| 26 FT | 9 | 11 | 9 | 8 | 4 | 6 | 5 | 6 | 36.9 | 25.0 | 29.0 | 5 | 16 | 26.0 | 28.0 | 5 | 16 | 19.0 | 19.0 | 4 | 6 | 5 | 6 | 39.6 | 91 | 103 | 5 | 8.5 | 27.0 | 29.0 | 5 | 12 | 5 | 8.5 | 0 |
| 28 FT | 10 | 12 | 9 | 8 | 4 | 6 | 5 | 6 | 37.9 | 30.0 | 30.0 | 5 | 17 | 26.0 | 28.0 | 5 | 17 | 19.0 | 19.0 | 4 | 6 | 5 | 6 | 40.3 | 92 | 104 | 4 | 6 | 27.0 | 29.0 | 5 | 12 | 5 | 8.5 | 0 |
| 30 FT | 10 | 12 | 9 | 8 | 4 | 6 | 5 | 6 | 37.8 | 30.0 | 30.0 | 5 | 16 | 26.0 | 28.0 | 5 | 16 | 19.0 | 19.0 | 4 | 6 | 6 | 7.5 | 43.1 | 92 | 104 | 5 | 8.5 | 27.0 | 29.0 | 5 | 12 | 5 | 8.5 | 0 |
| 32 FT | 11 | 12 | 10 | 8 | 4 | 6 | 5 | 6.5 | 38.4 | 31.0 | 31.0 | 5 | 17 | 26.0 | 28.0 | 5 | 17 | 18.0 | 19.0 | 5 | 9 | 5 | 6.5 | 39.6 | 92 | 104 | 5 | 8 | 27.0 | 29.0 | 5 | 12 | 5 | 8 | 0 |
| 34 FT | 11 | 13 | 10 | 8 | 5 | 9 | 5 | 6.5 | 38.3 | 31.0 | 31.0 | 5 | 16 | 26.0 | 28.0 | 5 | 16 | 19.0 | 19.0 | 5 | 9 | 5 | 6.5 | 40.4 | 93 | 105 | 5 | 8.5 | 28.0 | 30.0 | 5 | 12 | 5 | 8 | 0 |
| 36 FT | 12 | 13 | 10 | 8 | 5 | 9 | 5 | 6.5 | 39.1 | 32.0 | 32.0 | 5 | 17 | 26.0 | 28.0 | 5 | 17 | 18.0 | 19.0 | 5 | 8.5 | 5 | 6.5 | 40.3 | 93 | 105 | 5 | 8 | 27.0 | 30.0 | 5 | 12 | 5 | 8 | 0 |
| 38 FT | 12 | 14 | 10 | 8 | 5 | 8.5 | 5 | 6 | 39.0 | 32.0 | 32.0 | 5 | 17 | 26.0 | 28.0 | 5 | 17 | 18.0 | 19.0 | 5 | 9 | 5 | 6.5 | 40.9 | 94 | 106 | 5 | 8.5 | 28.0 | 30.0 | 5 | 12 | 5 | 8 | 0 |
| 40 FT | 12 | 14 | 11 | 8 | 5 | 8 | 5 | 7 | 38.9 | 32.0 | 32.0 | 5 | 16 | 26.0 | 28.0 | 5 | 16 | 18.0 | 19.0 | 5 | 8.5 | 5 | 7 | 40.8 | 94 | 106 | 5 | 8 | 28.0 | 30.0 | 5 | 12 | 5 | 7.5 | 0 |
| 42 FT | 13 | 14 | 11 | 8 | 5 | 8.5 | 5 | 7 | 39.6 | 33.0 | 33.0 | 5 | 17 | 26.0 | 28.0 | 5 | 17 | 18.0 | 19.0 | 5 | 8 | 5 | 7 | 40.5 | 94 | 106 | 5 | 7.5 | 28.0 | 30.0 | 5 | 12 | 5 | 7.5 | 0 |
| 44 FT | 13 | 15 | 11 | 8 | 5 | 8 | 5 | 6.5 | 39.5 | 33.0 | 33.0 | 5 | 16 | 26.0 | 28.0 | 5 | 16 | 18.0 | 19.0 | 5 | 8 | 5 | 7 | 41.3 | 95 | 107 | 5 | 8 | 28.0 | 30.0 | 5 | 12 | 5 | 7.5 | 0 |
| 46 FT | 13 | 15 | 12 | 8 | 5 | 7.5 | 5 | 6.5 | 39.5 | 33.0 | 33.0 | 5 | 15 | 26.0 | 28.0 | 5 | 15 | 18.0 | 19.0 | 5 | 8 | 5 | 6.5 | 41.0 | 95 | 107 | 5 | 7.5 | 28.0 | 30.0 | 5 | 12 | 5 | 7 | 0 |
| 48 FT | 14 | 15 | 12 | 8 | 5 | 8 | 5 | 6.5 | 40.3 | 34.0 | 34.0 | 5 | 17 | 26.0 | 27.0 | 5 | 17 | 18.0 | 19.0 | 5 | 7.5 | 5 | 6.5 | 40.9 | 95 | 107 | 5 | 7 | 28.0 | 30.0 | 5 | 12 | 5 | 7 | 0 |
| 50 FT | 14 | 16 | 12 | 8 | 5 | 7.5 | 5 | 6.5 | 40.1 | 34.0 | 34.0 | 5 | 16 | 26.0 | 27.0 | 5 | 16 | 18.0 | 19.0 | 5 | 8 | 5 | 6.5 | 41.6 | 96 | 108 | 5 | 7.5 | 28.0 | 30.0 | 5 | 12 | 5 | 7 | 0 |

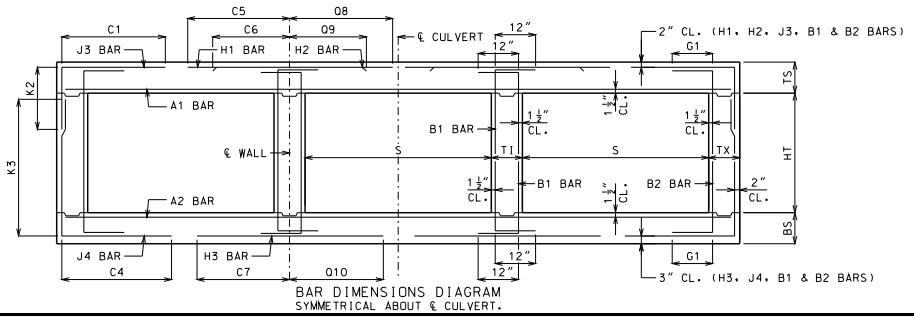


BAR DIMENSIONS DIAGRAM
SYMMETRICAL ABOUT ℄ CULVERT.

GENERAL NOTES:

IF DESIGN FILL IS BETWEEN TABULATED DESIGN FILLS, USE THE NEXT GREATER TABULATED DESIGN FILL, EXCEPT FOR DESIGN FILLS BETWEEN 2 FEET AND 4 FEET. FOR DESIGN FILLS BETWEEN 2 FEET AND 4 FEET USE THE GREATER MEMBER THICKNESS, AREA OF REINFORCEMENT AND BAR DIMENSIONS FROM THE 2 FEET AND 4 FEET TABULATED DESIGN FILLS. AREA OF REINFORCEMENT EQUALS BAR AREA PER FOOT SPACING.

SPECIAL DESIGNS ARE REQUIRED WHEN THE DESIGN FILL IS LESS THAN 1 FOOT OR GREATER THAN 50 FEET.

DIMENSIONS ARE IN INCHES UNLESS OTHERWISE SPECIFIED.

DESIGN FILLS ARE MEASURED FROM THE TOP OF TOP SLAB TO THE TOP OF EARTH FILL OR ROADWAY.

CULVERTS MEET STRENGTH AND SERVICEABILITY REQUIREMENTS FOR THE DESIGN VEHICULAR LIVE LOAD HL-93 MINUS THE LANE LOAD.


MISSOURI HIGHWAYS AND TRANSPORTATION COMMISSION
105 WEST CAPITOL
JEFFERSON CITY, MO 65102
1-888-ASK-MODOT (1-888-275-6636)


STATE OF MISSOURI — DENNIS W. HECKMAN — NUMBER PE-27141 — PROFESSIONAL ENGINEER
THIS SHEET HAS BEEN SIGNED, SEALED AND DATED ELECTRONICALLY.

# CONCRETE TRIPLE BOX CULVERT

MEMBER THICKNESS
BAR SIZE, SPACING & DIMENSIONS

SPAN (S): 5 FEET
HEIGHT (HT): 7 THRU 8 FEET

DATE EFFECTIVE: 12/01/2011
DATE PREPARED: 9/29/2011

703.87

SHEET NO.
5 OF 27

IF A SEAL IS PRESENT ON THIS SHEET IT HAS BEEN ELECTRONICALLY SEALED AND DATED.

SPAN (S) = 6 FT  HEIGHT (HT) = 3 FT OR 4 FT OR 5 FT

| DESIGN FILL | MEMBER THICKNESS | | | | TOP SLAB BARS | | | | | | | | | | | | | | | BOTTOM SLAB BARS | | | | | | | | | | | | WALL BARS | | | | |
|---|---|---|---|---|---|---|---|---|---|---|---|---|---|---|---|---|---|---|---|---|---|---|---|---|---|---|---|---|---|---|---|---|---|---|---|
| | | | | | A1 BARS | | J3 BARS | | | K2 | | | H1 BARS | | | | H2 BARS | | | | A2 BARS | | J4 BARS | | | K3 | | | H3 BARS | | | | B1 BARS | | B2 BARS | | |
| | TS | BS | TX | TI | SIZE | SPA. | SIZE | SPA. | C1 | HT=3′ | HT=4′ | HT=5′ | SIZE | SPA. | C5 | Q8 | SIZE | SPA. | C6 | Q9 | SIZE | SPA. | SIZE | SPA. | C4 | HT=3′ | HT=4′ | HT=5′ | SIZE | SPA. | C7 | Q10 | SIZE | SPA. | SIZE | SPA. | G1 |
| 1 FT | 11 | 8 | 8 | 8 | 5 | 8 | 4 | 9.5 | 37.5 | 27.0 | 27.0 | 27.0 | 4 | 17 | 64.5 | 48.5 | 4 | 17 | 24.0 | 23.0 | 4 | 10 | 4 | 10 | 38.1 | 40 | 52 | 64 | 4 | 7.5 | 33.0 | 34.0 | 5 | 12 | 5 | 12 | 12 |
| 2 FT | 11 | 8 | 8 | 8 | 5 | 8 | 4 | 9.5 | 37.5 | 27.0 | 27.0 | 27.0 | 4 | 17 | 64.5 | 48.5 | 4 | 17 | 23.0 | 22.0 | 4 | 9.5 | 4 | 9 | 35.1 | 40 | 52 | 64 | 4 | 7 | 33.0 | 34.0 | 5 | 12 | 5 | 12 | 12 |
| 4 FT | 8 | 8 | 8 | 8 | 4 | 7.5 | 4 | 8.5 | 35.8 | 24.0 | 24.0 | 24.0 | 4 | 14 | 43.0 | 52.0 | 4 | 14 | 21.0 | 21.0 | 4 | 9 | 4 | 9.5 | 32.1 | 40 | 52 | 64 | 4 | 6.5 | 32.0 | 33.0 | 5 | 12 | 5 | 12 | 12 |
| 6 FT | 8 | 8 | 8 | 8 | 4 | 9 | 4 | 9.5 | 32.6 | 24.0 | 24.0 | 24.0 | 4 | 14 | 35.0 | 38.0 | 4 | 14 | 21.0 | 20.0 | 4 | 8.5 | 4 | 8.5 | 30.0 | 40 | 52 | 64 | 4 | 6 | 31.0 | 32.0 | 5 | 12 | 5 | 12 | 12 |
| 8 FT | 8 | 8 | 8 | 8 | 4 | 9 | 4 | 9 | 30.4 | 24.0 | 24.0 | 24.0 | 4 | 13 | 33.0 | 35.0 | 4 | 13 | 20.0 | 20.0 | 4 | 8 | 4 | 8 | 29.0 | 40 | 52 | 64 | 5 | 7.5 | 30.0 | 32.0 | 5 | 12 | 5 | 12 | 0 |
| 10 FT | 8 | 8 | 8 | 8 | 4 | 8 | 4 | 8 | 29.4 | 24.0 | 24.0 | 24.0 | 4 | 12 | 32.0 | 34.0 | 4 | 12 | 20.0 | 20.0 | 4 | 7 | 4 | 7 | 28.4 | 40 | 52 | 64 | 5 | 6.5 | 30.0 | 32.0 | 5 | 12 | 5 | 12 | 0 |
| 12 FT | 8 | 9 | 8 | 8 | 4 | 7 | 4 | 7 | 28.8 | 24.0 | 24.0 | 24.0 | 5 | 17 | 31.0 | 33.0 | 5 | 17 | 20.0 | 20.0 | 4 | 6.5 | 4 | 9 | 27.4 | 41 | 53 | 65 | 5 | 7 | 30.0 | 32.0 | 5 | 12 | 5 | 12 | 0 |
| 14 FT | 8 | 9 | 8 | 8 | 4 | 6.5 | 4 | 6.5 | 28.3 | 24.0 | 24.0 | 24.0 | 5 | 16 | 31.0 | 32.0 | 5 | 16 | 21.0 | 21.0 | 5 | 9 | 4 | 8 | 26.9 | 41 | 53 | 65 | 5 | 6.5 | 30.0 | 32.0 | 5 | 12 | 5 | 12 | 0 |
| 16 FT | 9 | 10 | 8 | 8 | 4 | 6 | 4 | 7.5 | 27.6 | 25.0 | 25.0 | 25.0 | 5 | 16 | 30.0 | 33.0 | 5 | 16 | 20.0 | 20.0 | 5 | 9 | 4 | 9.5 | 26.5 | 42 | 54 | 66 | 5 | 7 | 29.0 | 32.0 | 5 | 12 | 5 | 12 | 0 |
| 18 FT | 9 | 10 | 8 | 8 | 5 | 9 | 4 | 6.5 | 27.4 | 25.0 | 25.0 | 25.0 | 5 | 16 | 30.0 | 32.0 | 5 | 16 | 21.0 | 21.0 | 5 | 8 | 4 | 8.5 | 26.3 | 42 | 54 | 66 | 5 | 6.5 | 29.0 | 32.0 | 5 | 12 | 5 | 12 | 0 |
| 20 FT | 10 | 11 | 8 | 8 | 5 | 9 | 4 | 7 | 27.0 | 26.0 | 26.0 | 26.0 | 5 | 15 | 30.0 | 33.0 | 5 | 15 | 20.0 | 20.0 | 5 | 8 | 4 | 8.5 | 26.0 | 43 | 55 | 67 | 5 | 7 | 29.0 | 33.0 | 5 | 12 | 5 | 12 | 0 |
| 22 FT | 10 | 11 | 8 | 8 | 5 | 8.5 | 4 | 6.5 | 26.0 | 26.0 | 26.0 | 26.0 | 5 | 15 | 29.0 | 32.0 | 5 | 15 | 20.0 | 20.0 | 5 | 7.5 | 4 | 8.5 | 25.0 | 43 | 55 | 67 | 5 | 7 | 29.0 | 33.0 | 5 | 12 | 5 | 12 | 0 |
| 24 FT | 11 | 12 | 8 | 8 | 5 | 8.5 | 4 | 6.5 | 25.8 | 27.0 | 27.0 | 27.0 | 5 | 15 | 29.0 | 32.0 | 5 | 15 | 20.0 | 20.0 | 5 | 8 | 4 | 8.5 | 24.9 | 44 | 56 | 68 | 5 | 7 | 29.0 | 33.0 | 5 | 12 | 5 | 12 | 0 |
| 26 FT | 11 | 12 | 8 | 8 | 5 | 7.5 | 4 | 6 | 25.6 | 27.0 | 27.0 | 27.0 | 5 | 14 | 29.0 | 32.0 | 5 | 14 | 20.0 | 20.0 | 5 | 6.5 | 4 | 8 | 24.9 | 44 | 56 | 68 | 5 | 6.5 | 29.0 | 33.0 | 5 | 12 | 5 | 12 | 0 |
| 28 FT | 12 | 13 | 8 | 8 | 5 | 7.5 | 4 | 6.5 | 25.5 | 28.0 | 28.0 | 28.0 | 5 | 14 | 29.0 | 32.0 | 5 | 14 | 19.0 | 20.0 | 5 | 7.5 | 4 | 8 | 24.9 | 45 | 57 | 69 | 5 | 7 | 29.0 | 33.0 | 5 | 12 | 5 | 12 | 0 |
| 30 FT | 12 | 14 | 8 | 8 | 5 | 7 | 4 | 6 | 25.6 | 28.0 | 28.0 | 28.0 | 5 | 13 | 29.0 | 32.0 | 5 | 13 | 19.0 | 20.0 | 5 | 7.5 | 4 | 7.5 | 24.8 | 46 | 58 | 70 | 5 | 7 | 28.0 | 33.0 | 5 | 12 | 5 | 12 | 0 |
| 32 FT | 13 | 14 | 8 | 8 | 5 | 7 | 4 | 6 | 25.4 | 29.0 | 29.0 | 29.0 | 5 | 14 | 28.0 | 33.0 | 5 | 14 | 19.0 | 20.0 | 5 | 7 | 4 | 7.5 | 24.9 | 46 | 58 | 70 | 5 | 6.5 | 28.0 | 33.0 | 5 | 12 | 5 | 12 | 0 |
| 34 FT | 13 | 15 | 8 | 8 | 5 | 7 | 5 | 8.5 | 25.6 | 29.0 | 29.0 | 29.0 | 5 | 13 | 28.0 | 32.0 | 5 | 13 | 19.0 | 20.0 | 5 | 7 | 4 | 7 | 24.8 | 47 | 59 | 71 | 5 | 7 | 28.0 | 33.0 | 5 | 12 | 5 | 12 | 0 |
| 36 FT | 14 | 15 | 8 | 8 | 5 | 7 | 4 | 6 | 25.4 | 30.0 | 30.0 | 30.0 | 5 | 13 | 28.0 | 33.0 | 5 | 13 | 19.0 | 20.0 | 5 | 6.5 | 4 | 7 | 25.0 | 47 | 59 | 71 | 5 | 6.5 | 28.0 | 33.0 | 5 | 12 | 5 | 12 | 0 |
| 38 FT | 14 | 16 | 8 | 8 | 5 | 6.5 | 5 | 8.5 | 25.5 | 30.0 | 30.0 | 30.0 | 5 | 13 | 28.0 | 32.0 | 5 | 13 | 19.0 | 20.0 | 5 | 7 | 4 | 6.5 | 24.9 | 48 | 60 | 72 | 5 | 6.5 | 28.0 | 33.0 | 5 | 12 | 5 | 12 | 0 |
| 40 FT | 15 | 16 | 8 | 8 | 5 | 6.5 | 5 | 8 | 30.4 | 31.0 | 31.0 | 31.0 | 5 | 13 | 33.0 | 38.0 | 5 | 13 | 24.0 | 25.0 | 5 | 6.5 | 4 | 6.5 | 25.1 | 48 | 60 | 72 | 5 | 6.5 | 28.0 | 33.0 | 5 | 12 | 5 | 12 | 0 |
| 42 FT | 15 | 17 | 8 | 8 | 5 | 6.5 | 5 | 8 | 30.6 | 31.0 | 31.0 | 31.0 | 5 | 12 | 33.0 | 37.0 | 5 | 12 | 24.0 | 25.0 | 5 | 6.5 | 4 | 6 | 25.1 | 49 | 61 | 73 | 5 | 6.5 | 28.0 | 33.0 | 5 | 12 | 5 | 12 | 0 |
| 44 FT | 16 | 17 | 8 | 8 | 5 | 6.5 | 5 | 7 | 30.5 | 32.0 | 32.0 | 32.0 | 5 | 13 | 33.0 | 37.0 | 5 | 13 | 24.0 | 25.0 | 5 | 6.5 | 4 | 6 | 25.3 | 49 | 61 | 73 | 5 | 6 | 28.0 | 33.0 | 5 | 12 | 5 | 12 | 0 |
| 46 FT | 16 | 17 | 8 | 8 | 5 | 6 | 5 | 7 | 30.5 | 32.0 | 32.0 | 32.0 | 5 | 12 | 33.0 | 37.0 | 5 | 12 | 24.0 | 25.0 | 5 | 6 | 4 | 6 | 25.3 | 49 | 61 | 73 | 5 | 6 | 28.0 | 33.0 | 5 | 12 | 5 | 12 | 0 |
| 48 FT | 17 | 18 | 8 | 8 | 5 | 6 | 5 | 6.5 | 30.6 | 37.0 | 37.0 | 37.0 | 5 | 13 | 33.0 | 37.0 | 5 | 13 | 24.0 | 25.0 | 5 | 6 | 5 | 6.5 | 25.5 | 50 | 62 | 74 | 5 | 6 | 28.0 | 33.0 | 5 | 12 | 5 | 11 | 0 |
| 50 FT | 17 | 18 | 8 | 8 | 5 | 6 | 5 | 6.5 | 30.6 | 37.0 | 37.0 | 37.0 | 5 | 12 | 33.0 | 37.0 | 5 | 12 | 24.0 | 25.0 | 5 | 6 | 5 | 6.5 | 25.4 | 50 | 62 | 74 | 5 | 6 | 28.0 | 33.0 | 5 | 12 | 5 | 10.5 | 0 |

SPAN (S) = 6 FT  HEIGHT (HT) = 6 FT OR 7 FT

| DESIGN FILL | MEMBER THICKNESS | | | | TOP SLAB BARS | | | | | | | | | | | | | | | BOTTOM SLAB BARS | | | | | | | | | | | | WALL BARS | | | | |
|---|---|---|---|---|---|---|---|---|---|---|---|---|---|---|---|---|---|---|---|---|---|---|---|---|---|---|---|---|---|---|---|---|---|---|---|
| | | | | | A1 BARS | | J3 BARS | | | K2 | | | H1 BARS | | | | H2 BARS | | | | A2 BARS | | J4 BARS | | | K3 | | | H3 BARS | | | | B1 BARS | | B2 BARS | | |
| | TS | BS | TX | TI | SIZE | SPA. | SIZE | SPA. | C1 | HT=6′ | HT=7′ | | SIZE | SPA. | C5 | Q8 | SIZE | SPA. | C6 | Q9 | SIZE | SPA. | SIZE | SPA. | C4 | HT=6′ | HT=7′ | | SIZE | SPA. | C7 | Q10 | SIZE | SPA. | SIZE | SPA. | G1 |
| 1 FT | 11 | 8 | 8 | 8 | 5 | 8 | 4 | 9.5 | 37.5 | 27.0 | 27.0 | | 4 | 17 | 64.5 | 48.5 | 4 | 17 | 24.0 | 24.0 | 4 | 9.5 | 4 | 7.5 | 52.8 | 76 | 88 | | 4 | 7 | 34.0 | 34.0 | 5 | 12 | 5 | 12 | 12 |
| 2 FT | 11 | 8 | 8 | 8 | 5 | 8 | 4 | 9.5 | 37.5 | 27.0 | 27.0 | | 4 | 17 | 64.5 | 48.5 | 4 | 17 | 23.0 | 23.0 | 4 | 8.5 | 4 | 7 | 47.3 | 76 | 88 | | 4 | 6.5 | 33.0 | 34.0 | 5 | 12 | 5 | 12 | 12 |
| 4 FT | 8 | 8 | 8 | 8 | 4 | 7 | 4 | 7 | 37.5 | 24.0 | 24.0 | | 4 | 14 | 64.5 | 52.0 | 4 | 14 | 21.0 | 22.0 | 4 | 8.5 | 4 | 7 | 43.0 | 76 | 88 | | 4 | 6.5 | 32.0 | 34.0 | 5 | 12 | 5 | 12 | 12 |
| 6 FT | 8 | 8 | 8 | 8 | 4 | 8.5 | 4 | 7.5 | 41.9 | 24.0 | 24.0 | | 4 | 14 | 37.0 | 39.0 | 4 | 14 | 21.0 | 21.0 | 4 | 8 | 4 | 6.5 | 39.1 | 76 | 88 | | 4 | 6 | 31.0 | 33.0 | 5 | 12 | 5 | 12 | 12 |
| 8 FT | 8 | 8 | 8 | 8 | 4 | 8.5 | 4 | 7 | 37.6 | 24.0 | 24.0 | | 4 | 13 | 34.0 | 35.0 | 4 | 13 | 20.0 | 20.0 | 4 | 7.5 | 4 | 6 | 36.9 | 76 | 88 | | 5 | 7 | 30.0 | 32.0 | 5 | 12 | 5 | 12 | 0 |
| 10 FT | 8 | 8 | 8 | 8 | 4 | 8 | 4 | 6 | 36.0 | 24.0 | 24.0 | | 4 | 12 | 32.0 | 34.0 | 4 | 12 | 20.0 | 20.0 | 4 | 6.5 | 5 | 6 | 35.4 | 76 | 88 | | 5 | 6.5 | 30.0 | 32.0 | 5 | 12 | 5 | 12 | 0 |
| 12 FT | 8 | 9 | 8 | 8 | 4 | 7 | 5 | 6.5 | 34.8 | 24.0 | 24.0 | | 5 | 17 | 31.0 | 33.0 | 5 | 17 | 20.0 | 20.0 | 4 | 6.5 | 4 | 6 | 35.0 | 77 | 89 | | 5 | 7 | 30.0 | 32.0 | 5 | 12 | 5 | 12 | 0 |
| 14 FT | 8 | 9 | 8 | 8 | 4 | 6 | 5 | 6 | 33.9 | 24.0 | 28.0 | | 5 | 16 | 31.0 | 33.0 | 5 | 16 | 21.0 | 21.0 | 5 | 8.5 | 5 | 6.5 | 34.1 | 77 | 89 | | 5 | 6.5 | 30.0 | 32.0 | 5 | 12 | 5 | 12 | 0 |
| 16 FT | 9 | 10 | 8 | 8 | 4 | 6 | 5 | 6.5 | 33.8 | 25.0 | 25.0 | | 5 | 16 | 30.0 | 33.0 | 5 | 16 | 20.0 | 20.0 | 5 | 9 | 4 | 6 | 34.0 | 78 | 90 | | 5 | 7 | 29.0 | 33.0 | 5 | 12 | 5 | 12 | 0 |
| 18 FT | 9 | 10 | 8 | 8 | 5 | 9 | 5 | 6.5 | 33.4 | 25.0 | 29.0 | | 5 | 16 | 30.0 | 32.0 | 5 | 16 | 21.0 | 21.0 | 5 | 8 | 5 | 6.5 | 33.6 | 78 | 90 | | 5 | 6.5 | 29.0 | 32.0 | 5 | 12 | 5 | 12 | 0 |
| 20 FT | 9 | 11 | 8 | 8 | 5 | 8 | 5 | 6 | 33.1 | 25.0 | 29.0 | | 5 | 16 | 30.0 | 32.0 | 5 | 16 | 21.0 | 22.0 | 5 | 8 | 5 | 7 | 33.8 | 79 | 91 | | 5 | 7.5 | 29.0 | 33.0 | 5 | 12 | 5 | 12 | 0 |
| 22 FT | 10 | 11 | 8 | 8 | 5 | 8.5 | 5 | 7 | 31.6 | 26.0 | 30.0 | | 5 | 15 | 29.0 | 32.0 | 5 | 15 | 20.0 | 20.0 | 5 | 7.5 | 5 | 7 | 31.9 | 79 | 91 | | 5 | 7 | 29.0 | 33.0 | 5 | 12 | 5 | 12 | 0 |
| 24 FT | 10 | 12 | 8 | 8 | 5 | 7.5 | 5 | 6.5 | 31.6 | 26.0 | 30.0 | | 5 | 15 | 29.0 | 32.0 | 5 | 15 | 20.0 | 21.0 | 5 | 8 | 5 | 7.5 | 32.0 | 80 | 92 | | 5 | 7 | 29.0 | 33.0 | 5 | 12 | 5 | 12 | 0 |
| 26 FT | 11 | 13 | 8 | 8 | 5 | 8 | 5 | 6.5 | 31.9 | 27.0 | 31.0 | | 5 | 14 | 29.0 | 32.0 | 5 | 14 | 20.0 | 20.0 | 5 | 8 | 5 | 7.5 | 32.3 | 81 | 93 | | 5 | 7.5 | 29.0 | 33.0 | 5 | 12 | 5 | 11 | 0 |
| 28 FT | 12 | 13 | 8 | 8 | 5 | 8 | 5 | 7 | 31.9 | 28.0 | 32.0 | | 5 | 14 | 29.0 | 32.0 | 5 | 14 | 19.0 | 20.0 | 5 | 7.5 | 5 | 7 | 32.3 | 81 | 93 | | 5 | 7 | 29.0 | 33.0 | 5 | 12 | 5 | 10 | 0 |
| 30 FT | 12 | 14 | 8 | 8 | 5 | 7.5 | 5 | 6.5 | 32.0 | 28.0 | 32.0 | | 5 | 13 | 29.0 | 32.0 | 5 | 13 | 19.0 | 20.0 | 5 | 7.5 | 5 | 7.5 | 32.4 | 82 | 94 | | 5 | 7 | 29.0 | 33.0 | 5 | 12 | 5 | 9.5 | 0 |
| 32 FT | 13 | 14 | 8 | 8 | 5 | 7.5 | 5 | 6.5 | 32.0 | 33.0 | 33.0 | | 5 | 14 | 28.0 | 32.0 | 5 | 14 | 19.0 | 20.0 | 5 | 7 | 5 | 7 | 32.5 | 82 | 94 | | 5 | 6.5 | 29.0 | 33.0 | 5 | 12 | 5 | 9.5 | 0 |
| 34 FT | 13 | 15 | 8 | 8 | 5 | 7 | 5 | 6.5 | 32.1 | 33.0 | 33.0 | | 5 | 13 | 28.0 | 32.0 | 5 | 13 | 19.0 | 20.0 | 5 | 7 | 5 | 7 | 32.6 | 83 | 95 | | 5 | 7 | 29.0 | 33.0 | 5 | 12 | 5 | 9.5 | 0 |
| 36 FT | 14 | 15 | 8 | 8 | 5 | 7 | 5 | 6 | 32.3 | 34.0 | 34.0 | | 5 | 14 | 28.0 | 32.0 | 5 | 14 | 19.0 | 20.0 | 5 | 7 | 5 | 6.5 | 32.8 | 83 | 95 | | 5 | 6.5 | 29.0 | 33.0 | 5 | 12 | 5 | 9.5 | 0 |
| 38 FT | 14 | 16 | 9 | 8 | 5 | 6.5 | 5 | 7 | 32.9 | 30.0 | 34.0 | | 5 | 13 | 28.0 | 32.0 | 5 | 13 | 19.0 | 20.0 | 5 | 7 | 5 | 8 | 33.1 | 84 | 96 | | 5 | 6.5 | 29.0 | 33.0 | 5 | 12 | 5 | 8.5 | 0 |
| 40 FT | 14 | 16 | 10 | 8 | 5 | 6 | 5 | 7.5 | 33.3 | 30.0 | 34.0 | | 5 | 12 | 28.0 | 32.0 | 5 | 12 | 19.0 | 20.0 | 5 | 6.5 | 5 | 7.5 | 33.4 | 84 | 96 | | 5 | 6.5 | 29.0 | 33.0 | 5 | 12 | 5 | 9.5 | 0 |
| 42 FT | 15 | 17 | 10 | 8 | 5 | 6.5 | 5 | 7.5 | 38.5 | 31.0 | 35.0 | | 5 | 13 | 33.0 | 37.0 | 5 | 13 | 24.0 | 25.0 | 5 | 7 | 5 | 7.5 | 33.6 | 85 | 97 | | 5 | 6.5 | 29.0 | 33.0 | 5 | 12 | 5 | 9 | 0 |
| 44 FT | 15 | 17 | 10 | 8 | 5 | 6.5 | 5 | 7.5 | 38.5 | 31.0 | 35.0 | | 5 | 12 | 33.0 | 37.0 | 5 | 12 | 24.0 | 25.0 | 5 | 6.5 | 5 | 7.5 | 33.6 | 85 | 97 | | 5 | 6 | 29.0 | 33.0 | 5 | 12 | 5 | 8.5 | 0 |
| 46 FT | 16 | 17 | 10 | 8 | 5 | 6.5 | 5 | 7 | 38.6 | 32.0 | 36.0 | | 5 | 13 | 33.0 | 36.0 | 5 | 13 | 24.0 | 25.0 | 5 | 6 | 5 | 7.5 | 33.8 | 85 | 97 | | 5 | 6 | 29.0 | 33.0 | 5 | 12 | 5 | 8 | 0 |
| 48 FT | 16 | 18 | 11 | 8 | 5 | 6 | 5 | 7 | 39.3 | 32.0 | 36.0 | | 5 | 12 | 33.0 | 36.0 | 5 | 12 | 24.0 | 25.0 | 5 | 6.5 | 5 | 7.5 | 34.1 | 86 | 98 | | 5 | 6 | 29.0 | 34.0 | 5 | 12 | 5 | 8.5 | 0 |
| 50 FT | 17 | 18 | 11 | 8 | 5 | 6 | 5 | 7 | 39.4 | 33.0 | 37.0 | | 5 | 13 | 33.0 | 36.0 | 5 | 13 | 24.0 | 25.0 | 5 | 6 | 5 | 7.5 | 34.3 | 86 | 98 | | 5 | 6 | 29.0 | 33.0 | 5 | 12 | 5 | 8 | 0 |

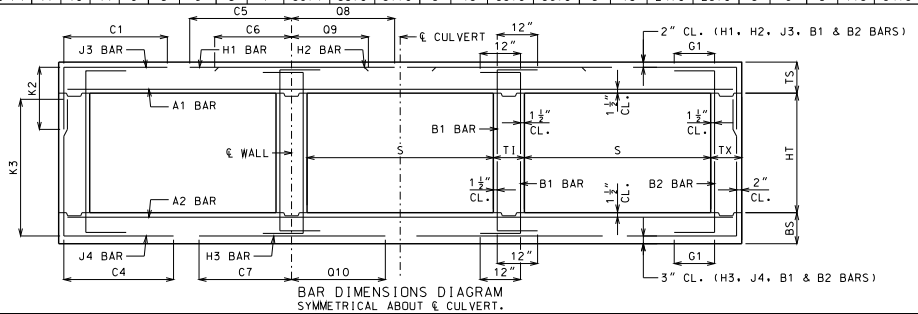


BAR DIMENSIONS DIAGRAM
SYMMETRICAL ABOUT ℄ CULVERT.

GENERAL NOTES:

IF DESIGN FILL IS BETWEEN TABULATED DESIGN FILLS, USE THE NEXT GREATER TABULATED DESIGN FILL, EXCEPT FOR DESIGN FILLS BETWEEN 2 FEET AND 4 FEET. FOR DESIGN FILLS BETWEEN 2 FEET AND 4 FEET USE THE GREATER MEMBER THICKNESS, AREA OF REINFORCEMENT AND BAR DIMENSIONS FROM THE 2 FEET AND 4 FEET TABULATED DESIGN FILLS. AREA OF REINFORCEMENT EQUALS BAR AREA PER FOOT SPACING.

SPECIAL DESIGNS ARE REQUIRED WHEN THE DESIGN FILL IS LESS THAN 1 FOOT OR GREATER THAN 50 FEET.

DIMENSIONS ARE IN INCHES UNLESS OTHERWISE SPECIFIED.

DESIGN FILLS ARE MEASURED FROM THE TOP OF TOP SLAB TO THE TOP OF EARTH FILL OR ROADWAY.

CULVERTS MEET STRENGTH AND SERVICEABILITY REQUIREMENTS FOR THE DESIGN VEHICULAR LIVE LOAD HL-93 MINUS THE LANE LOAD.


MISSOURI HIGHWAYS AND TRANSPORTATION COMMISSION
105 WEST CAPITOL
JEFFERSON CITY, MO 65102
1-888-ASK-MODOT (1-888-275-6636)


STATE OF MISSOURI
DENNIS W. HECKMAN
NUMBER PE-27141
PROFESSIONAL ENGINEER
THIS SHEET HAS BEEN SIGNED, SEALED AND DATED ELECTRONICALLY.

# CONCRETE TRIPLE BOX CULVERT

MEMBER THICKNESS
BAR SIZE, SPACING & DIMENSIONS

SPAN (S): 6 FEET
HEIGHT (HT): 3 THRU 7 FEET

DATE EFFECTIVE: 12/01/2011
DATE PREPARED: 9/29/2011

703.87

SHEET NO.
6 OF 27

IF A SEAL IS PRESENT ON THIS SHEET IT HAS BEEN ELECTRONICALLY SEALED AND DATED.

SPAN (S) = 6 FT  HEIGHT (HT) = 8 FT OR 9 FT

| DESIGN FILL | MEMBER THICKNESS | | | | TOP SLAB BARS | | | | | | | | | | | | | | BOTTOM SLAB BARS | | | | | | | | | | WALL BARS | | | | |
|---|---|---|---|---|---|---|---|---|---|---|---|---|---|---|---|---|---|---|---|---|---|---|---|---|---|---|---|---|---|---|---|---|---|
| | | | | | A1 BARS | | J3 BARS | | | | | H1 BARS | | | | H2 BARS | | | | A2 BARS | | J4 BARS | | | | H3 BARS | | | | B1 BARS | | B2 BARS | |
| | TS | BS | TX | TI | SIZE | SPA. | SIZE | SPA. | C1 | K2 HT=8′ | K2 HT=9′ | SIZE | SPA. | C5 | O8 | SIZE | SPA. | C6 | O9 | SIZE | SPA. | SIZE | SPA. | C4 | K3 HT=8′ | K3 HT=9′ | SIZE | SPA. | C7 | O10 | SIZE | SPA. | SIZE | SPA. | G1 |
| 1 FT | 11 | 8 | 8 | 8 | 5 | 7.5 | 4 | 7 | 37.5 | 27.0 | 27.0 | 4 | 17 | 64.5 | 48.5 | 4 | 17 | 24.0 | 25.0 | 4 | 8.5 | 5 | 6.5 | 54.0 | 100 | 112 | 4 | 7 | 52.0 | 35.0 | 5 | 12 | 5 | 12 | 12 |
| 2 FT | 11 | 8 | 8 | 8 | 5 | 7.5 | 4 | 6.5 | 37.5 | 27.0 | 27.0 | 4 | 17 | 64.5 | 48.5 | 4 | 17 | 23.0 | 24.0 | 4 | 8 | 5 | 6 | 54.0 | 100 | 112 | 4 | 6.5 | 35.0 | 34.0 | 5 | 12 | 5 | 12 | 12 |
| 4 FT | 8 | 8 | 9 | 8 | 4 | 7 | 4 | 6 | 38.1 | 24.0 | 24.0 | 4 | 14 | 64.5 | 52.0 | 4 | 14 | 22.0 | 22.0 | 4 | 8 | 5 | 6.5 | 54.8 | 100 | 112 | 4 | 6 | 33.0 | 34.0 | 5 | 12 | 5 | 12 | 12 |
| 6 FT | 8 | 8 | 9 | 8 | 4 | 8.5 | 4 | 6 | 38.1 | 24.0 | 24.0 | 4 | 14 | 64.5 | 40.0 | 4 | 14 | 21.0 | 21.0 | 4 | 8 | 5 | 6 | 50.8 | 100 | 112 | 4 | 6 | 32.0 | 33.0 | 5 | 12 | 5 | 12 | 12 |
| 8 FT | 8 | 9 | 9 | 8 | 4 | 8.5 | 4 | 6 | 50.1 | 24.0 | 24.0 | 4 | 14 | 35.0 | 35.0 | 4 | 14 | 20.0 | 20.0 | 4 | 8.5 | 5 | 6.5 | 50.8 | 101 | 113 | 4 | 6.5 | 31.0 | 33.0 | 5 | 12 | 5 | 12 | 0 |
| 10 FT | 8 | 9 | 9 | 8 | 4 | 8 | 5 | 6.5 | 45.8 | 24.0 | 28.0 | 4 | 12 | 33.0 | 33.0 | 4 | 12 | 20.0 | 20.0 | 4 | 7.5 | 5 | 6 | 47.5 | 101 | 113 | 4 | 6 | 31.0 | 33.0 | 5 | 12 | 5 | 11 | 0 |
| 12 FT | 8 | 9 | 10 | 8 | 4 | 7 | 5 | 6.5 | 43.0 | 24.0 | 28.0 | 5 | 17 | 32.0 | 33.0 | 5 | 17 | 20.0 | 20.0 | 4 | 6.5 | 5 | 6.5 | 44.8 | 101 | 113 | 5 | 7 | 30.0 | 32.0 | 5 | 12 | 5 | 11 | 0 |
| 14 FT | 8 | 9 | 10 | 8 | 4 | 6.5 | 5 | 6 | 41.6 | 28.0 | 28.0 | 5 | 17 | 31.0 | 32.0 | 5 | 17 | 21.0 | 21.0 | 4 | 6 | 5 | 6 | 43.5 | 101 | 113 | 5 | 6.5 | 30.0 | 32.0 | 5 | 12 | 5 | 10 | 0 |
| 16 FT | 8 | 10 | 10 | 8 | 4 | 6 | 6 | 7 | 43.3 | 28.0 | 28.0 | 5 | 16 | 30.0 | 32.0 | 5 | 16 | 22.0 | 22.0 | 5 | 9 | 5 | 6 | 44.4 | 102 | 114 | 5 | 7 | 30.0 | 33.0 | 5 | 12 | 5 | 9.5 | 0 |
| 18 FT | 9 | 10 | 10 | 8 | 4 | 6 | 5 | 6 | 41.8 | 29.0 | 29.0 | 5 | 16 | 30.0 | 32.0 | 5 | 16 | 20.0 | 21.0 | 5 | 8.5 | 6 | 7.5 | 46.4 | 102 | 114 | 5 | 7 | 30.0 | 32.0 | 5 | 12 | 5 | 9 | 0 |
| 20 FT | 9 | 11 | 10 | 8 | 5 | 8.5 | 5 | 6 | 41.0 | 29.0 | 29.0 | 5 | 16 | 30.0 | 32.0 | 5 | 16 | 21.0 | 22.0 | 5 | 8.5 | 5 | 6 | 44.4 | 103 | 115 | 5 | 7 | 30.0 | 33.0 | 5 | 12 | 5 | 8.5 | 0 |
| 22 FT | 10 | 11 | 10 | 8 | 5 | 9 | 5 | 6.5 | 39.9 | 30.0 | 30.0 | 5 | 15 | 29.0 | 32.0 | 5 | 15 | 20.0 | 20.0 | 5 | 8 | 5 | 6 | 41.4 | 103 | 115 | 5 | 7 | 30.0 | 33.0 | 5 | 12 | 5 | 9 | 0 |
| 24 FT | 10 | 12 | 10 | 8 | 5 | 8 | 5 | 6.5 | 39.5 | 30.0 | 30.0 | 5 | 15 | 29.0 | 32.0 | 5 | 15 | 20.0 | 21.0 | 5 | 8 | 5 | 6 | 42.3 | 104 | 116 | 5 | 7 | 30.0 | 33.0 | 5 | 12 | 5 | 8.5 | 0 |
| 26 FT | 11 | 12 | 10 | 8 | 5 | 8 | 5 | 6 | 40.5 | 31.0 | 31.0 | 5 | 14 | 29.0 | 32.0 | 5 | 14 | 19.0 | 20.0 | 5 | 7 | 5 | 6 | 41.9 | 104 | 116 | 5 | 6.5 | 30.0 | 33.0 | 5 | 12 | 5 | 8 | 0 |
| 28 FT | 11 | 13 | 10 | 8 | 5 | 7.5 | 5 | 6 | 40.3 | 31.0 | 31.0 | 5 | 14 | 29.0 | 32.0 | 5 | 14 | 20.0 | 20.0 | 5 | 7.5 | 5 | 6 | 42.8 | 105 | 117 | 5 | 7 | 30.0 | 33.0 | 5 | 12 | 5 | 8 | 0 |
| 30 FT | 12 | 14 | 10 | 8 | 5 | 8 | 5 | 6 | 41.0 | 32.0 | 32.0 | 5 | 14 | 29.0 | 31.0 | 5 | 14 | 19.0 | 20.0 | 5 | 8 | 5 | 6 | 43.3 | 106 | 118 | 5 | 7 | 30.0 | 33.0 | 5 | 12 | 5 | 8 | 0 |
| 32 FT | 12 | 14 | 11 | 8 | 5 | 7.5 | 5 | 6.5 | 40.8 | 32.0 | 32.0 | 5 | 13 | 29.0 | 31.0 | 5 | 13 | 19.0 | 20.0 | 5 | 7.5 | 5 | 7 | 42.9 | 106 | 118 | 5 | 6.5 | 30.0 | 33.0 | 5 | 12 | 5 | 7.5 | 0 |
| 34 FT | 13 | 15 | 11 | 8 | 5 | 7.5 | 5 | 6.5 | 41.5 | 33.0 | 33.0 | 5 | 13 | 28.0 | 31.0 | 5 | 13 | 19.0 | 20.0 | 5 | 7.5 | 5 | 7 | 43.5 | 107 | 119 | 5 | 7 | 30.0 | 33.0 | 5 | 12 | 5 | 7.5 | 0 |
| 36 FT | 13 | 15 | 11 | 8 | 5 | 7 | 5 | 6 | 41.4 | 33.0 | 33.0 | 5 | 13 | 28.0 | 31.0 | 5 | 13 | 19.0 | 20.0 | 5 | 7 | 5 | 6.5 | 43.4 | 107 | 119 | 5 | 6.5 | 30.0 | 33.0 | 5 | 12 | 5 | 7.5 | 0 |
| 38 FT | 14 | 16 | 12 | 8 | 5 | 7 | 5 | 6.5 | 42.1 | 34.0 | 34.0 | 5 | 13 | 28.0 | 31.0 | 5 | 13 | 19.0 | 20.0 | 5 | 7 | 5 | 6.5 | 43.8 | 108 | 120 | 5 | 6.5 | 30.0 | 33.0 | 5 | 12 | 5 | 7 | 0 |
| 40 FT | 14 | 16 | 12 | 8 | 5 | 7 | 5 | 6 | 42.0 | 34.0 | 34.0 | 5 | 13 | 28.0 | 31.0 | 5 | 13 | 19.0 | 20.0 | 5 | 7 | 5 | 6.5 | 43.6 | 108 | 120 | 5 | 6.5 | 30.0 | 33.0 | 5 | 12 | 5 | 7 | 0 |
| 42 FT | 15 | 17 | 12 | 8 | 5 | 7 | 5 | 6 | 47.6 | 35.0 | 35.0 | 5 | 13 | 33.0 | 36.0 | 5 | 13 | 24.0 | 25.0 | 5 | 7 | 5 | 6.5 | 44.3 | 109 | 121 | 5 | 6.5 | 30.0 | 33.0 | 5 | 12 | 5 | 7 | 0 |
| 44 FT | 15 | 17 | 13 | 8 | 5 | 6.5 | 5 | 6 | 47.6 | 35.0 | 35.0 | 5 | 13 | 33.0 | 36.0 | 5 | 13 | 24.0 | 25.0 | 5 | 6.5 | 5 | 6 | 44.0 | 109 | 121 | 5 | 6 | 30.0 | 33.0 | 5 | 12 | 5 | 6.5 | 0 |
| 46 FT | 15 | 17 | 13 | 8 | 5 | 6 | 5 | 6 | 47.6 | 35.0 | 35.0 | 5 | 12 | 33.0 | 36.0 | 5 | 12 | 24.0 | 25.0 | 5 | 6 | 5 | 6 | 43.9 | 109 | 121 | 5 | 6 | 30.0 | 33.0 | 5 | 12 | 5 | 6.5 | 0 |
| 48 FT | 16 | 18 | 13 | 8 | 5 | 6.5 | 5 | 6 | 48.3 | 36.0 | 36.0 | 5 | 13 | 33.0 | 35.0 | 5 | 13 | 24.0 | 25.0 | 5 | 6.5 | 5 | 6 | 44.5 | 110 | 122 | 5 | 6 | 30.0 | 33.0 | 5 | 12 | 5 | 6.5 | 0 |
| 50 FT | 16 | 18 | 14 | 8 | 5 | 6 | 5 | 6 | 48.3 | 36.0 | 36.0 | 5 | 12 | 33.0 | 35.0 | 5 | 12 | 24.0 | 25.0 | 5 | 6 | 5 | 6 | 44.3 | 110 | 122 | 6 | 8.5 | 32.0 | 37.0 | 5 | 12 | 5 | 6.5 | 0 |

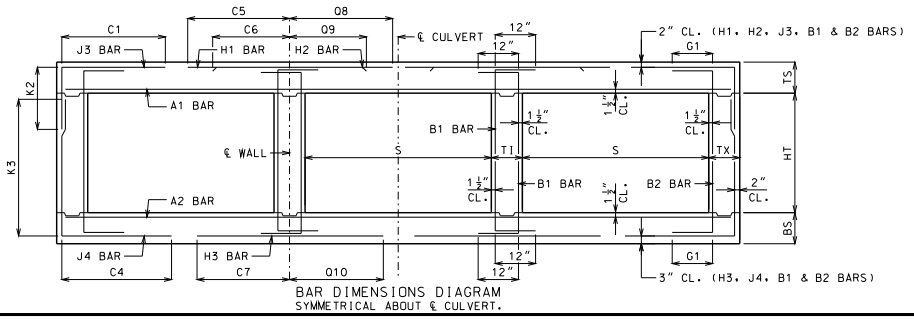


BAR DIMENSIONS DIAGRAM
SYMMETRICAL ABOUT ℄ CULVERT.

GENERAL NOTES:

IF DESIGN FILL IS BETWEEN TABULATED DESIGN FILLS, USE THE NEXT GREATER TABULATED DESIGN FILL, EXCEPT FOR DESIGN FILLS BETWEEN 2 FEET AND 4 FEET. FOR DESIGN FILLS BETWEEN 2 FEET AND 4 FEET USE THE GREATER MEMBER THICKNESS, AREA OF REINFORCEMENT AND BAR DIMENSIONS FROM THE 2 FEET AND 4 FEET TABULATED DESIGN FILLS. AREA OF REINFORCEMENT EQUALS BAR AREA PER FOOT SPACING.

SPECIAL DESIGNS ARE REQUIRED WHEN THE DESIGN FILL IS LESS THAN 1 FOOT OR GREATER THAN 50 FEET.

DIMENSIONS ARE IN INCHES UNLESS OTHERWISE SPECIFIED.

DESIGN FILLS ARE MEASURED FROM THE TOP OF TOP SLAB TO THE TOP OF EARTH FILL OR ROADWAY.

CULVERTS MEET STRENGTH AND SERVICEABILITY REQUIREMENTS FOR THE DESIGN VEHICULAR LIVE LOAD HL-93 MINUS THE LANE LOAD.


MISSOURI HIGHWAYS AND TRANSPORTATION COMMISSION
105 WEST CAPITOL
JEFFERSON CITY, MO 65102
1-888-ASK-MODOT (1-888-275-6636)


STATE OF MISSOURI
DENNIS W. HECKMAN
NUMBER PE-27141
PROFESSIONAL ENGINEER
THIS SHEET HAS BEEN SIGNED, SEALED AND DATED ELECTRONICALLY.

# CONCRETE TRIPLE BOX CULVERT

MEMBER THICKNESS
BAR SIZE, SPACING & DIMENSIONS

SPAN (S): 6 FEET
HEIGHT (HT): 8 THRU 9 FEET

DATE EFFECTIVE: 12/01/2011
DATE PREPARED: 9/29/2011

703.87

SHEET NO.
7 OF 27

IF A SEAL IS PRESENT ON THIS SHEET IT HAS BEEN ELECTRONICALLY SEALED AND DATED.

SPAN (S) = 7 FT  HEIGHT (HT) = 4 FT OR 5 FT OR 6 FT

| DESIGN FILL | MEMBER THICKNESS | | | | TOP SLAB BARS | | | | | | | | | | | | | | BOTTOM SLAB BARS | | | | | | | | | | | | WALL BARS | | | | |
|---|---|---|---|---|---|---|---|---|---|---|---|---|---|---|---|---|---|---|---|---|---|---|---|---|---|---|---|---|---|---|---|---|---|---|---|
| | | | | | A1 BARS | | J3 BARS | | | K2 | | | H1 BARS | | | | H2 BARS | | | | A2 BARS | | J4 BARS | | | K3 | | | H3 BARS | | | | B1 BARS | | B2 BARS | | |
| | TS | BS | TX | TI | SIZE | SPA. | SIZE | SPA. | C1 | HT=4′ | HT=5′ | HT=6′ | SIZE | SPA. | C5 | Q8 | SIZE | SPA. | C6 | Q9 | SIZE | SPA. | SIZE | SPA. | C4 | HT=4′ | HT=5′ | HT=6′ | SIZE | SPA. | C7 | Q10 | SIZE | SPA. | SIZE | SPA. | G1 |
| 1 FT | 12 | 8 | 8 | 8 | 5 | 7.5 | 4 | 8.5 | 41.1 | 28.0 | 28.0 | 28.0 | 4 | 16 | 72.5 | 54.5 | 4 | 16 | 25.0 | 25.0 | 4 | 8.5 | 4 | 7.5 | 42.5 | 52 | 64 | 76 | 4 | 6 | 36.0 | 37.0 | 5 | 12 | 5 | 12 | 12 |
| 2 FT | 12 | 8 | 8 | 8 | 5 | 7.5 | 4 | 8.5 | 41.1 | 28.0 | 28.0 | 28.0 | 4 | 15 | 72.5 | 54.5 | 4 | 15 | 24.0 | 24.0 | 4 | 7.5 | 4 | 7 | 39.0 | 52 | 64 | 76 | 5 | 7.5 | 35.0 | 37.0 | 5 | 12 | 5 | 12 | 12 |
| 4 FT | 8 | 8 | 8 | 8 | 4 | 6 | 4 | 6.5 | 39.5 | 24.0 | 24.0 | 24.0 | 5 | 17 | 47.0 | 58.0 | 5 | 17 | 23.0 | 23.0 | 4 | 7 | 4 | 7 | 36.0 | 52 | 64 | 76 | 5 | 7 | 35.0 | 37.0 | 5 | 12 | 5 | 12 | 12 |
| 6 FT | 8 | 8 | 8 | 8 | 4 | 6.5 | 4 | 7 | 36.0 | 24.0 | 24.0 | 24.0 | 5 | 17 | 38.0 | 42.0 | 5 | 17 | 22.0 | 22.0 | 4 | 6.5 | 4 | 6.5 | 33.4 | 52 | 64 | 76 | 5 | 6.5 | 34.0 | 36.0 | 5 | 12 | 5 | 12 | 12 |
| 8 FT | 8 | 8 | 8 | 8 | 4 | 6.5 | 4 | 6.5 | 33.5 | 24.0 | 24.0 | 24.0 | 5 | 17 | 36.0 | 38.0 | 5 | 17 | 23.0 | 22.0 | 5 | 9 | 4 | 6 | 32.0 | 52 | 64 | 76 | 5 | 6 | 33.0 | 35.0 | 5 | 12 | 5 | 12 | 0 |
| 10 FT | 8 | 9 | 8 | 8 | 4 | 6 | 5 | 7 | 32.3 | 24.0 | 24.0 | 24.0 | 5 | 16 | 35.0 | 37.0 | 5 | 16 | 23.0 | 23.0 | 5 | 9 | 4 | 7 | 30.9 | 53 | 65 | 77 | 5 | 6.5 | 33.0 | 35.0 | 5 | 12 | 5 | 12 | 0 |
| 12 FT | 8 | 9 | 8 | 8 | 4 | 6 | 5 | 6 | 31.4 | 24.0 | 24.0 | 24.0 | 5 | 14 | 34.0 | 36.0 | 5 | 14 | 23.0 | 23.0 | 5 | 7.5 | 4 | 6 | 30.1 | 53 | 65 | 77 | 5 | 6 | 32.0 | 35.0 | 5 | 12 | 5 | 12 | 0 |
| 14 FT | 9 | 10 | 8 | 8 | 5 | 8.5 | 4 | 6 | 30.5 | 25.0 | 25.0 | 25.0 | 5 | 15 | 33.0 | 36.0 | 5 | 15 | 23.0 | 23.0 | 5 | 7.5 | 4 | 7 | 29.5 | 54 | 66 | 78 | 5 | 6 | 32.0 | 36.0 | 5 | 12 | 5 | 12 | 0 |
| 16 FT | 10 | 11 | 8 | 8 | 5 | 8 | 5 | 8 | 29.9 | 26.0 | 26.0 | 26.0 | 5 | 15 | 33.0 | 36.0 | 5 | 15 | 22.0 | 22.0 | 5 | 7.5 | 4 | 7 | 29.0 | 55 | 67 | 79 | 5 | 6.5 | 32.0 | 36.0 | 5 | 12 | 5 | 12 | 0 |
| 18 FT | 10 | 11 | 8 | 8 | 5 | 8 | 5 | 7.5 | 29.5 | 26.0 | 26.0 | 26.0 | 5 | 15 | 33.0 | 36.0 | 5 | 15 | 23.0 | 24.0 | 5 | 6 | 4 | 6.5 | 28.6 | 55 | 67 | 79 | 5 | 6 | 32.0 | 36.0 | 5 | 12 | 5 | 12 | 0 |
| 20 FT | 11 | 12 | 8 | 8 | 5 | 7.5 | 5 | 8.5 | 29.1 | 27.0 | 27.0 | 27.0 | 5 | 14 | 32.0 | 36.0 | 5 | 14 | 22.0 | 23.0 | 5 | 6.5 | 4 | 6.5 | 28.4 | 56 | 68 | 80 | 5 | 6 | 31.0 | 36.0 | 5 | 12 | 5 | 12 | 0 |
| 22 FT | 12 | 13 | 8 | 8 | 5 | 7 | 5 | 8.5 | 28.9 | 28.0 | 28.0 | 28.0 | 5 | 13 | 32.0 | 36.0 | 5 | 13 | 21.0 | 22.0 | 5 | 6.5 | 4 | 6 | 28.3 | 57 | 69 | 81 | 5 | 6 | 31.0 | 36.0 | 5 | 12 | 5 | 12 | 0 |
| 24 FT | 12 | 13 | 8 | 8 | 5 | 7 | 5 | 8.5 | 27.6 | 28.0 | 28.0 | 28.0 | 5 | 13 | 31.0 | 36.0 | 5 | 13 | 21.0 | 22.0 | 5 | 6 | 4 | 6 | 27.1 | 57 | 69 | 81 | 6 | 8 | 34.0 | 39.0 | 5 | 12 | 5 | 12 | 0 |
| 26 FT | 13 | 14 | 8 | 8 | 5 | 6.5 | 5 | 8.5 | 27.5 | 29.0 | 29.0 | 29.0 | 5 | 12 | 31.0 | 36.0 | 5 | 12 | 20.0 | 21.0 | 5 | 6.5 | 4 | 6 | 27.1 | 58 | 70 | 82 | 5 | 6 | 31.0 | 36.0 | 5 | 12 | 5 | 12 | 0 |
| 28 FT | 13 | 15 | 8 | 8 | 5 | 6.5 | 5 | 8.5 | 27.6 | 29.0 | 29.0 | 29.0 | 5 | 12 | 31.0 | 36.0 | 5 | 12 | 21.0 | 22.0 | 5 | 6.5 | 4 | 6.5 | 27.0 | 59 | 71 | 83 | 5 | 6 | 31.0 | 37.0 | 5 | 12 | 5 | 12 | 0 |
| 30 FT | 14 | 15 | 8 | 8 | 5 | 6 | 5 | 8.5 | 27.5 | 30.0 | 30.0 | 34.0 | 5 | 12 | 31.0 | 36.0 | 5 | 12 | 20.0 | 21.0 | 5 | 6 | 5 | 8.5 | 27.1 | 59 | 71 | 83 | 6 | 8 | 34.0 | 39.0 | 5 | 12 | 5 | 12 | 0 |
| 32 FT | 15 | 16 | 8 | 8 | 5 | 6 | 5 | 8 | 32.5 | 31.0 | 31.0 | 35.0 | 6 | 17 | 39.0 | 45.0 | 6 | 17 | 29.0 | 30.0 | 5 | 6 | 5 | 8 | 27.3 | 60 | 72 | 84 | 6 | 8 | 34.0 | 40.0 | 5 | 12 | 5 | 12 | 0 |
| 34 FT | 15 | 17 | 8 | 8 | 5 | 6 | 5 | 8 | 32.6 | 31.0 | 31.0 | 31.0 | 6 | 16 | 39.0 | 45.0 | 6 | 16 | 29.0 | 30.0 | 5 | 6 | 4 | 6 | 27.3 | 61 | 73 | 85 | 6 | 8.5 | 34.0 | 40.0 | 5 | 12 | 5 | 11.5 | 0 |
| 36 FT | 16 | 17 | 8 | 8 | 5 | 6 | 5 | 7 | 32.5 | 32.0 | 32.0 | 36.0 | 6 | 16 | 39.0 | 45.0 | 6 | 16 | 29.0 | 30.0 | 6 | 8.5 | 5 | 7 | 27.4 | 61 | 73 | 85 | 6 | 8 | 34.0 | 40.0 | 5 | 12 | 5 | 11 | 0 |
| 38 FT | 16 | 18 | 8 | 8 | 6 | 8 | 5 | 7 | 32.6 | 32.0 | 36.0 | 36.0 | 6 | 15 | 39.0 | 45.0 | 6 | 15 | 29.0 | 30.0 | 5 | 6 | 5 | 6.5 | 27.4 | 62 | 74 | 86 | 6 | 8 | 34.0 | 40.0 | 5 | 12 | 5 | 10 | 0 |
| 40 FT | 17 | 18 | 8 | 8 | 6 | 8 | 5 | 6.5 | 32.6 | 37.0 | 37.0 | 37.0 | 6 | 16 | 39.0 | 45.0 | 6 | 16 | 29.0 | 30.0 | 6 | 8 | 5 | 6.5 | 27.6 | 62 | 74 | 86 | 6 | 7.5 | 34.0 | 40.0 | 5 | 12 | 5 | 9.5 | 0 |
| 42 FT | 17 | 19 | 8 | 8 | 6 | 7.5 | 5 | 6.5 | 32.8 | 37.0 | 37.0 | 37.0 | 6 | 15 | 39.0 | 45.0 | 6 | 15 | 29.0 | 30.0 | 6 | 8 | 5 | 6.5 | 27.6 | 63 | 75 | 87 | 6 | 8 | 34.0 | 40.0 | 5 | 12 | 5 | 9.5 | 0 |
| 44 FT | 18 | 19 | 8 | 8 | 6 | 7.5 | 5 | 6.5 | 32.6 | 38.0 | 38.0 | 38.0 | 6 | 15 | 39.0 | 45.0 | 6 | 15 | 29.0 | 30.0 | 6 | 7.5 | 5 | 6.5 | 27.8 | 63 | 75 | 87 | 6 | 7.5 | 34.0 | 40.0 | 5 | 12 | 5 | 9.5 | 0 |
| 46 FT | 18 | 20 | 8 | 8 | 6 | 7.5 | 5 | 6.5 | 32.8 | 38.0 | 38.0 | 38.0 | 6 | 15 | 39.0 | 44.0 | 6 | 15 | 29.0 | 30.0 | 6 | 8 | 5 | 6 | 27.8 | 64 | 76 | 88 | 6 | 7.5 | 34.0 | 40.0 | 5 | 12 | 5 | 9.5 | 0 |
| 48 FT | 19 | 20 | 8 | 8 | 6 | 7.5 | 5 | 6 | 32.8 | 39.0 | 39.0 | 39.0 | 6 | 15 | 39.0 | 44.0 | 6 | 15 | 29.0 | 30.0 | 6 | 7.5 | 5 | 6 | 27.9 | 64 | 76 | 88 | 6 | 7 | 34.0 | 40.0 | 5 | 12 | 5 | 9.5 | 0 |
| 50 FT | 19 | 21 | 8 | 8 | 6 | 7 | 5 | 6 | 32.9 | 39.0 | 39.0 | 39.0 | 6 | 14 | 39.0 | 44.0 | 6 | 14 | 29.0 | 30.0 | 6 | 7.5 | 6 | 7.5 | 31.0 | 65 | 77 | 89 | 6 | 7.5 | 34.0 | 40.0 | 5 | 12 | 5 | 9 | 0 |

SPAN (S) = 7 FT  HEIGHT (HT) = 7 FT OR 8 FT

| DESIGN FILL | MEMBER THICKNESS | | | | TOP SLAB BARS | | | | | | | | | | | | | | BOTTOM SLAB BARS | | | | | | | | | | | | WALL BARS | | | | |
|---|---|---|---|---|---|---|---|---|---|---|---|---|---|---|---|---|---|---|---|---|---|---|---|---|---|---|---|---|---|---|---|---|---|---|---|
| | | | | | A1 BARS | | J3 BARS | | | K2 | | | H1 BARS | | | | H2 BARS | | | | A2 BARS | | J4 BARS | | | K3 | | | H3 BARS | | | | B1 BARS | | B2 BARS | | |
| | TS | BS | TX | TI | SIZE | SPA. | SIZE | SPA. | C1 | HT=7′ | HT=8′ | SIZE | SPA. | C5 | Q8 | SIZE | SPA. | C6 | Q9 | SIZE | SPA. | SIZE | SPA. | C4 | HT=7′ | HT=8′ | SIZE | SPA. | C7 | Q10 | SIZE | SPA. | SIZE | SPA. | G1 |
| 1 FT | 12 | 8 | 8 | 8 | 5 | 7.5 | 4 | 8 | 41.1 | 28.0 | 28.0 | 4 | 16 | 72.5 | 54.5 | 4 | 16 | 25.0 | 26.0 | 4 | 8 | 4 | 6 | 57.4 | 88 | 100 | 4 | 6 | 37.0 | 37.0 | 5 | 12 | 5 | 12 | 12 |
| 2 FT | 12 | 8 | 8 | 8 | 5 | 7.5 | 4 | 7.5 | 41.1 | 28.0 | 28.0 | 4 | 15 | 72.5 | 54.5 | 4 | 15 | 25.0 | 25.0 | 4 | 7 | 5 | 6.5 | 51.3 | 88 | 100 | 5 | 7 | 36.0 | 37.0 | 5 | 12 | 5 | 12 | 12 |
| 4 FT | 8 | 8 | 9 | 8 | 4 | 6 | 4 | 6 | 41.8 | 24.0 | 24.0 | 5 | 17 | 73.5 | 58.0 | 5 | 17 | 23.0 | 23.0 | 4 | 7 | 4 | 6.5 | 45.9 | 88 | 100 | 5 | 7 | 35.0 | 37.0 | 5 | 12 | 5 | 12 | 12 |
| 6 FT | 8 | 8 | 9 | 8 | 4 | 6.5 | 4 | 6 | 44.3 | 24.0 | 24.0 | 5 | 17 | 40.0 | 43.0 | 5 | 17 | 22.0 | 22.0 | 4 | 6.5 | 5 | 6.5 | 41.8 | 88 | 100 | 5 | 6.5 | 34.0 | 36.0 | 5 | 12 | 5 | 12 | 12 |
| 8 FT | 8 | 8 | 9 | 8 | 4 | 6.5 | 4 | 6 | 40.9 | 24.0 | 24.0 | 5 | 17 | 37.0 | 38.0 | 5 | 17 | 22.0 | 23.0 | 5 | 9 | 5 | 6 | 39.9 | 88 | 100 | 5 | 6 | 33.0 | 35.0 | 5 | 12 | 5 | 12 | 0 |
| 10 FT | 8 | 9 | 9 | 8 | 4 | 6 | 5 | 6.5 | 39.1 | 24.0 | 28.0 | 5 | 16 | 35.0 | 37.0 | 5 | 16 | 23.0 | 23.0 | 5 | 9 | 5 | 7 | 39.4 | 89 | 101 | 5 | 6.5 | 33.0 | 36.0 | 5 | 12 | 5 | 12 | 0 |
| 12 FT | 8 | 9 | 9 | 8 | 4 | 6 | 6 | 7 | 41.0 | 24.0 | 28.0 | 5 | 15 | 34.0 | 36.0 | 5 | 15 | 23.0 | 24.0 | 5 | 7 | 5 | 6 | 38.3 | 89 | 101 | 5 | 6 | 32.0 | 35.0 | 5 | 12 | 5 | 12 | 0 |
| 14 FT | 9 | 10 | 9 | 8 | 5 | 8.5 | 5 | 6 | 37.8 | 25.0 | 29.0 | 5 | 15 | 34.0 | 36.0 | 5 | 15 | 23.0 | 23.0 | 5 | 7.5 | 5 | 6.5 | 37.9 | 90 | 102 | 5 | 6 | 32.0 | 36.0 | 5 | 12 | 5 | 12 | 0 |
| 16 FT | 10 | 11 | 9 | 8 | 5 | 8 | 5 | 7 | 37.4 | 26.0 | 30.0 | 5 | 15 | 33.0 | 36.0 | 5 | 15 | 22.0 | 22.0 | 5 | 7.5 | 5 | 7 | 37.6 | 91 | 103 | 5 | 6.5 | 32.0 | 36.0 | 5 | 12 | 5 | 12 | 0 |
| 18 FT | 10 | 11 | 9 | 8 | 5 | 8 | 5 | 6.5 | 36.8 | 30.0 | 30.0 | 5 | 15 | 33.0 | 36.0 | 5 | 15 | 23.0 | 23.0 | 5 | 6 | 5 | 6.5 | 36.9 | 91 | 103 | 5 | 6 | 32.0 | 36.0 | 5 | 12 | 5 | 12 | 0 |
| 20 FT | 11 | 12 | 9 | 8 | 5 | 7.5 | 5 | 6.5 | 36.8 | 31.0 | 31.0 | 5 | 14 | 32.0 | 36.0 | 5 | 14 | 21.0 | 22.0 | 5 | 7 | 5 | 6.5 | 37.0 | 92 | 104 | 5 | 6 | 32.0 | 36.0 | 5 | 12 | 5 | 11 | 0 |
| 22 FT | 11 | 13 | 9 | 8 | 5 | 7 | 5 | 6 | 36.5 | 31.0 | 31.0 | 5 | 14 | 32.0 | 35.0 | 5 | 14 | 22.0 | 23.0 | 5 | 7 | 5 | 7 | 37.0 | 93 | 105 | 5 | 6 | 32.0 | 36.0 | 5 | 12 | 5 | 10 | 0 |
| 24 FT | 12 | 13 | 9 | 8 | 5 | 7 | 5 | 7 | 34.8 | 32.0 | 32.0 | 5 | 13 | 31.0 | 35.0 | 5 | 13 | 21.0 | 22.0 | 5 | 6 | 5 | 7 | 35.0 | 93 | 105 | 6 | 8 | 34.0 | 39.0 | 5 | 12 | 5 | 10.5 | 0 |
| 26 FT | 13 | 14 | 9 | 8 | 5 | 7 | 5 | 7 | 34.9 | 33.0 | 33.0 | 5 | 12 | 31.0 | 35.0 | 5 | 12 | 20.0 | 21.0 | 5 | 6.5 | 5 | 7.5 | 35.3 | 94 | 106 | 5 | 6 | 31.0 | 36.0 | 5 | 12 | 5 | 9.5 | 0 |
| 28 FT | 13 | 15 | 9 | 8 | 5 | 6.5 | 5 | 6.5 | 34.9 | 33.0 | 33.0 | 5 | 12 | 31.0 | 35.0 | 5 | 12 | 21.0 | 22.0 | 5 | 6.5 | 5 | 7.5 | 35.4 | 95 | 107 | 5 | 6 | 31.0 | 36.0 | 5 | 12 | 5 | 9 | 0 |
| 30 FT | 14 | 15 | 9 | 8 | 5 | 6.5 | 5 | 7 | 35.0 | 34.0 | 34.0 | 5 | 12 | 31.0 | 35.0 | 5 | 12 | 20.0 | 21.0 | 5 | 6 | 5 | 7 | 35.4 | 95 | 107 | 6 | 8 | 34.0 | 39.0 | 5 | 12 | 5 | 8.5 | 0 |
| 32 FT | 14 | 16 | 9 | 8 | 5 | 6 | 5 | 6 | 35.0 | 34.0 | 34.0 | 5 | 12 | 31.0 | 35.0 | 5 | 12 | 20.0 | 21.0 | 5 | 6 | 5 | 7 | 35.5 | 96 | 108 | 6 | 8 | 35.0 | 39.0 | 5 | 12 | 5 | 8.5 | 0 |
| 34 FT | 15 | 17 | 10 | 8 | 5 | 6 | 5 | 7 | 40.8 | 35.0 | 35.0 | 6 | 16 | 40.0 | 44.0 | 6 | 16 | 29.0 | 30.0 | 5 | 6 | 5 | 7.5 | 36.0 | 97 | 109 | 6 | 8.5 | 35.0 | 40.0 | 5 | 12 | 5 | 8.5 | 0 |
| 36 FT | 16 | 17 | 10 | 8 | 5 | 6 | 5 | 7 | 40.8 | 36.0 | 36.0 | 6 | 17 | 39.0 | 44.0 | 6 | 17 | 29.0 | 30.0 | 5 | 6 | 5 | 7.5 | 36.0 | 97 | 109 | 6 | 8 | 35.0 | 40.0 | 5 | 12 | 5 | 8 | 0 |
| 38 FT | 16 | 18 | 11 | 8 | 5 | 6 | 5 | 7 | 41.5 | 36.0 | 36.0 | 6 | 16 | 39.0 | 44.0 | 6 | 16 | 29.0 | 30.0 | 5 | 6 | 5 | 7 | 36.5 | 98 | 110 | 6 | 8 | 35.0 | 40.0 | 5 | 12 | 5 | 8.5 | 0 |
| 40 FT | 17 | 18 | 11 | 8 | 5 | 6 | 5 | 7 | 41.5 | 37.0 | 37.0 | 6 | 16 | 39.0 | 43.0 | 6 | 16 | 29.0 | 30.0 | 6 | 8 | 5 | 7 | 36.5 | 98 | 110 | 6 | 7.5 | 35.0 | 40.0 | 5 | 12 | 5 | 8 | 0 |
| 42 FT | 17 | 19 | 11 | 8 | 6 | 8 | 5 | 6.5 | 41.6 | 37.0 | 37.0 | 6 | 16 | 39.0 | 43.0 | 6 | 16 | 29.0 | 30.0 | 6 | 8.5 | 5 | 7 | 36.8 | 99 | 111 | 6 | 7.5 | 35.0 | 40.0 | 5 | 12 | 5 | 7.5 | 0 |
| 44 FT | 18 | 19 | 12 | 8 | 6 | 8 | 5 | 6.5 | 42.3 | 38.0 | 38.0 | 6 | 16 | 39.0 | 43.0 | 6 | 16 | 29.0 | 29.0 | 6 | 8 | 5 | 6.5 | 37.0 | 99 | 111 | 6 | 7.5 | 35.0 | 40.0 | 5 | 12 | 5 | 8 | 0 |
| 46 FT | 18 | 20 | 12 | 8 | 6 | 8 | 5 | 6.5 | 42.4 | 38.0 | 38.0 | 6 | 15 | 39.0 | 43.0 | 6 | 15 | 29.0 | 29.0 | 6 | 8 | 5 | 6.5 | 37.1 | 100 | 112 | 6 | 7.5 | 35.0 | 40.0 | 5 | 12 | 5 | 7.5 | 0 |
| 48 FT | 18 | 20 | 12 | 8 | 6 | 7.5 | 5 | 6.5 | 42.4 | 38.0 | 38.0 | 6 | 15 | 39.0 | 43.0 | 6 | 15 | 29.0 | 29.0 | 6 | 7.5 | 5 | 6.5 | 37.1 | 100 | 112 | 6 | 7 | 35.0 | 40.0 | 5 | 12 | 5 | 7.5 | 0 |
| 50 FT | 19 | 21 | 12 | 8 | 6 | 7.5 | 5 | 6 | 42.5 | 39.0 | 39.0 | 6 | 15 | 39.0 | 43.0 | 6 | 15 | 28.0 | 29.0 | 6 | 8 | 5 | 6.5 | 37.5 | 101 | 113 | 6 | 7.5 | 35.0 | 40.0 | 5 | 12 | 5 | 7 | 0 |

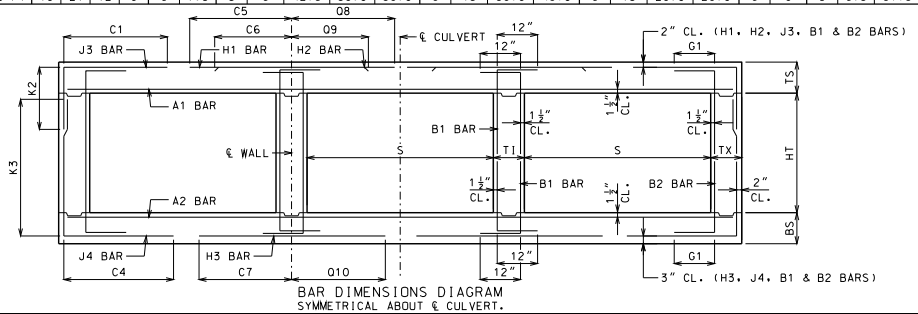


BAR DIMENSIONS DIAGRAM
SYMMETRICAL ABOUT ℄ CULVERT.

GENERAL NOTES:

IF DESIGN FILL IS BETWEEN TABULATED DESIGN FILLS, USE THE NEXT GREATER TABULATED DESIGN FILL, EXCEPT FOR DESIGN FILLS BETWEEN 2 FEET AND 4 FEET. FOR DESIGN FILLS BETWEEN 2 FEET AND 4 FEET USE THE GREATER MEMBER THICKNESS, AREA OF REINFORCEMENT AND BAR DIMENSIONS FROM THE 2 FEET AND 4 FEET TABULATED DESIGN FILLS. AREA OF REINFORCEMENT EQUALS BAR AREA PER FOOT SPACING.

SPECIAL DESIGNS ARE REQUIRED WHEN THE DESIGN FILL IS LESS THAN 1 FOOT OR GREATER THAN 50 FEET.

DIMENSIONS ARE IN INCHES UNLESS OTHERWISE SPECIFIED.

DESIGN FILLS ARE MEASURED FROM THE TOP OF TOP SLAB TO THE TOP OF EARTH FILL OR ROADWAY.

CULVERTS MEET STRENGTH AND SERVICEABILITY REQUIREMENTS FOR THE DESIGN VEHICULAR LIVE LOAD HL-93 MINUS THE LANE LOAD.


MISSOURI HIGHWAYS AND TRANSPORTATION COMMISSION
105 WEST CAPITOL
JEFFERSON CITY, MO 65102
1-888-ASK-MODOT (1-888-275-6636)


STATE OF MISSOURI
DENNIS W. HECKMAN
NUMBER PE-27141
PROFESSIONAL ENGINEER
THIS SHEET HAS BEEN SIGNED, SEALED AND DATED ELECTRONICALLY.

# CONCRETE TRIPLE BOX CULVERT

MEMBER THICKNESS
BAR SIZE, SPACING & DIMENSIONS

SPAN (S): 7 FEET
HEIGHT (HT): 4 THRU 8 FEET

DATE EFFECTIVE: 12/01/2011
DATE PREPARED: 9/29/2011

703.87

SHEET NO.
8 OF 27

IF A SEAL IS PRESENT ON THIS SHEET IT HAS BEEN ELECTRONICALLY SEALED AND DATED.

SPAN (S) = 7 FT  HEIGHT (HT) = 9 FT OR 10 FT

| DESIGN FILL | MEMBER THICKNESS | | | | TOP SLAB BARS | | | | | | | | | | | | | | BOTTOM SLAB BARS | | | | | | | | | | WALL BARS | | | | |
|---|---|---|---|---|---|---|---|---|---|---|---|---|---|---|---|---|---|---|---|---|---|---|---|---|---|---|---|---|---|---|---|---|---|
| | | | | | A1 BARS | | J3 BARS | | | | | H1 BARS | | | | H2 BARS | | | | A2 BARS | | J4 BARS | | | | | H3 BARS | | | | B1 BARS | | B2 BARS | |
| | TS | BS | TX | TI | SIZE | SPA. | SIZE | SPA. | C1 | K2 HT=9′ | K2 HT=10′ | SIZE | SPA. | C5 | O8 | SIZE | SPA. | C6 | O9 | SIZE | SPA. | SIZE | SPA. | C4 | K3 HT=9′ | K3 HT=10′ | SIZE | SPA. | C7 | O10 | SIZE | SPA. | SIZE | SPA. | G1 |
| 1 FT | 12 | 9 | 8 | 8 | 5 | 7.5 | 5 | 9 | 41.1 | 28.0 | 32.0 | 4 | 16 | 72.5 | 54.5 | 4 | 16 | 26.0 | 27.0 | 4 | 8 | 5 | 6 | 60.0 | 113 | 125 | 4 | 7 | 58.0 | 38.0 | 5 | 12 | 5 | 12 | 12 |
| 2 FT | 12 | 9 | 8 | 8 | 5 | 7 | 5 | 8.5 | 41.1 | 28.0 | 32.0 | 4 | 15 | 72.5 | 54.5 | 4 | 15 | 25.0 | 26.0 | 4 | 7.5 | 6 | 7 | 63.0 | 113 | 125 | 4 | 6.5 | 39.0 | 38.0 | 5 | 12 | 5 | 12 | 12 |
| 4 FT | 8 | 9 | 9 | 8 | 4 | 6 | 5 | 6 | 44.8 | 24.0 | 28.0 | 5 | 17 | 75.5 | 58.0 | 5 | 17 | 23.0 | 23.0 | 4 | 7 | 5 | 6 | 60.8 | 113 | 125 | 4 | 6 | 37.0 | 38.0 | 5 | 12 | 5 | 11 | 12 |
| 6 FT | 8 | 9 | 10 | 8 | 4 | 6.5 | 5 | 6.5 | 59.1 | 24.0 | 28.0 | 5 | 17 | 45.0 | 43.0 | 5 | 17 | 22.0 | 22.0 | 4 | 7 | 5 | 6.5 | 56.3 | 113 | 125 | 5 | 7.5 | 34.0 | 37.0 | 5 | 12 | 5 | 11 | 12 |
| 8 FT | 8 | 9 | 10 | 8 | 4 | 6.5 | 5 | 6.5 | 50.8 | 28.0 | 28.0 | 5 | 17 | 38.0 | 38.0 | 5 | 17 | 22.0 | 22.0 | 4 | 6.5 | 5 | 6 | 51.8 | 113 | 125 | 5 | 7 | 33.0 | 36.0 | 5 | 12 | 5 | 10.5 | 0 |
| 10 FT | 8 | 9 | 10 | 8 | 4 | 6 | 6 | 7.5 | 50.9 | 28.0 | 32.0 | 5 | 16 | 36.0 | 37.0 | 5 | 16 | 23.0 | 23.0 | 5 | 9 | 6 | 6.5 | 52.6 | 113 | 125 | 5 | 6 | 33.0 | 36.0 | 5 | 12 | 5 | 9.5 | 0 |
| 12 FT | 8 | 10 | 10 | 8 | 4 | 6 | 6 | 6.5 | 48.5 | 28.0 | 32.0 | 5 | 15 | 35.0 | 36.0 | 5 | 15 | 23.0 | 24.0 | 5 | 8.5 | 6 | 7 | 53.1 | 114 | 126 | 5 | 6.5 | 33.0 | 36.0 | 5 | 12 | 5 | 9 | 0 |
| 14 FT | 9 | 10 | 10 | 8 | 5 | 8.5 | 5 | 6 | 46.4 | 29.0 | 29.0 | 5 | 16 | 34.0 | 36.0 | 5 | 16 | 23.0 | 23.0 | 5 | 8 | 6 | 7 | 51.3 | 114 | 126 | 5 | 6 | 33.0 | 36.0 | 5 | 12 | 5 | 8.5 | 0 |
| 16 FT | 9 | 11 | 10 | 8 | 5 | 8 | 5 | 6 | 44.8 | 29.0 | 29.0 | 5 | 15 | 33.0 | 35.0 | 5 | 15 | 23.0 | 24.0 | 5 | 7.5 | 6 | 7 | 51.8 | 115 | 127 | 5 | 6 | 33.0 | 36.0 | 5 | 12 | 5 | 8 | 0 |
| 18 FT | 10 | 12 | 10 | 8 | 5 | 8 | 5 | 6.5 | 45.3 | 30.0 | 30.0 | 5 | 15 | 33.0 | 35.0 | 5 | 15 | 22.0 | 23.0 | 5 | 7.5 | 6 | 7 | 51.8 | 116 | 128 | 5 | 6.5 | 33.0 | 36.0 | 5 | 12 | 5 | 8 | 0 |
| 20 FT | 11 | 12 | 10 | 8 | 5 | 7.5 | 5 | 6 | 46.1 | 31.0 | 31.0 | 5 | 14 | 33.0 | 35.0 | 5 | 14 | 21.0 | 22.0 | 5 | 7 | 6 | 6.5 | 50.8 | 116 | 128 | 5 | 6 | 33.0 | 36.0 | 5 | 12 | 5 | 8 | 0 |
| 22 FT | 11 | 13 | 10 | 8 | 5 | 7.5 | 5 | 6 | 45.4 | 31.0 | 31.0 | 5 | 14 | 32.0 | 35.0 | 5 | 14 | 22.0 | 23.0 | 5 | 7 | 6 | 6.5 | 51.4 | 117 | 129 | 5 | 6 | 33.0 | 36.0 | 5 | 12 | 5 | 8 | 0 |
| 24 FT | 12 | 13 | 10 | 8 | 5 | 7 | 5 | 6 | 43.4 | 32.0 | 32.0 | 5 | 13 | 31.0 | 35.0 | 5 | 13 | 21.0 | 22.0 | 5 | 6 | 6 | 6.5 | 48.0 | 117 | 129 | 6 | 8 | 35.0 | 39.0 | 5 | 12 | 5 | 8 | 0 |
| 26 FT | 12 | 14 | 10 | 8 | 5 | 7 | 6 | 7.5 | 46.1 | 32.0 | 36.0 | 5 | 13 | 31.0 | 35.0 | 5 | 13 | 21.0 | 22.0 | 5 | 6.5 | 6 | 7 | 48.6 | 118 | 130 | 6 | 8.5 | 35.0 | 39.0 | 5 | 12 | 5 | 8 | 0 |
| 28 FT | 13 | 15 | 11 | 8 | 5 | 6.5 | 5 | 6 | 43.6 | 33.0 | 33.0 | 5 | 12 | 31.0 | 35.0 | 5 | 12 | 20.0 | 21.0 | 5 | 6.5 | 5 | 6.5 | 45.9 | 119 | 131 | 5 | 6 | 32.0 | 36.0 | 5 | 12 | 5 | 7.5 | 0 |
| 30 FT | 14 | 15 | 11 | 8 | 5 | 6.5 | 5 | 6 | 44.3 | 34.0 | 34.0 | 5 | 12 | 31.0 | 35.0 | 5 | 12 | 20.0 | 21.0 | 5 | 6 | 5 | 6 | 45.5 | 119 | 131 | 6 | 8 | 35.0 | 39.0 | 5 | 12 | 5 | 7.5 | 0 |
| 32 FT | 14 | 16 | 12 | 8 | 5 | 6.5 | 5 | 6 | 44.1 | 34.0 | 34.0 | 5 | 12 | 31.0 | 34.0 | 5 | 12 | 20.0 | 21.0 | 5 | 6.5 | 5 | 6 | 45.9 | 120 | 132 | 6 | 8 | 35.0 | 40.0 | 5 | 12 | 5 | 7 | 0 |
| 34 FT | 15 | 17 | 12 | 8 | 5 | 6.5 | 5 | 6 | 49.6 | 35.0 | 35.0 | 6 | 17 | 40.0 | 43.0 | 6 | 17 | 29.0 | 30.0 | 5 | 6.5 | 5 | 6.5 | 46.5 | 121 | 133 | 6 | 8 | 36.0 | 40.0 | 5 | 12 | 5 | 7 | 0 |
| 36 FT | 15 | 17 | 13 | 8 | 5 | 6 | 5 | 6 | 49.6 | 35.0 | 35.0 | 6 | 16 | 40.0 | 43.0 | 6 | 16 | 29.0 | 30.0 | 5 | 6 | 5 | 6 | 46.0 | 121 | 133 | 6 | 7.5 | 35.0 | 40.0 | 5 | 12 | 5 | 6.5 | 0 |
| 38 FT | 16 | 18 | 13 | 8 | 5 | 6 | 6 | 8.5 | 54.1 | 36.0 | 36.0 | 6 | 16 | 40.0 | 43.0 | 6 | 16 | 29.0 | 29.0 | 5 | 6 | 5 | 6 | 46.6 | 122 | 134 | 6 | 8 | 36.0 | 40.0 | 5 | 12 | 5 | 6.5 | 0 |
| 40 FT | 16 | 18 | 13 | 8 | 6 | 8.5 | 6 | 8 | 54.0 | 36.0 | 36.0 | 6 | 15 | 40.0 | 43.0 | 6 | 15 | 29.0 | 30.0 | 5 | 6 | 5 | 6 | 46.5 | 122 | 134 | 6 | 7.5 | 36.0 | 40.0 | 5 | 12 | 5 | 6.5 | 0 |
| 42 FT | 17 | 19 | 14 | 8 | 5 | 6 | 6 | 8 | 54.8 | 37.0 | 37.0 | 6 | 16 | 39.0 | 42.0 | 6 | 16 | 29.0 | 29.0 | 5 | 6 | 5 | 6 | 46.9 | 123 | 135 | 6 | 7.5 | 36.0 | 40.0 | 5 | 12 | 5 | 6 | 0 |
| 44 FT | 17 | 19 | 14 | 8 | 6 | 8 | 6 | 8 | 54.6 | 37.0 | 37.0 | 6 | 15 | 39.0 | 42.0 | 6 | 15 | 29.0 | 29.0 | 6 | 8 | 5 | 6 | 46.8 | 123 | 135 | 6 | 7 | 36.0 | 40.0 | 5 | 12 | 5 | 6 | 0 |
| 46 FT | 18 | 20 | 14 | 8 | 6 | 8 | 6 | 7.5 | 55.3 | 38.0 | 38.0 | 6 | 16 | 39.0 | 42.0 | 6 | 16 | 28.0 | 29.0 | 6 | 8 | 5 | 6 | 47.3 | 124 | 136 | 6 | 7.5 | 36.0 | 40.0 | 5 | 12 | 5 | 6 | 0 |
| 48 FT | 18 | 20 | 15 | 8 | 6 | 7.5 | 6 | 8 | 55.4 | 38.0 | 42.0 | 6 | 15 | 39.0 | 42.0 | 6 | 15 | 28.0 | 29.0 | 6 | 7.5 | 6 | 8 | 50.0 | 124 | 136 | 6 | 7 | 36.0 | 40.0 | 5 | 12 | 6 | 8.5 | 0 |
| 50 FT | 18 | 21 | 15 | 8 | 6 | 7 | 6 | 7.5 | 55.4 | 38.0 | 42.0 | 6 | 14 | 39.0 | 42.0 | 6 | 14 | 28.0 | 29.0 | 6 | 8 | 6 | 8 | 50.6 | 125 | 137 | 6 | 7 | 36.0 | 40.0 | 5 | 12 | 6 | 8 | 0 |

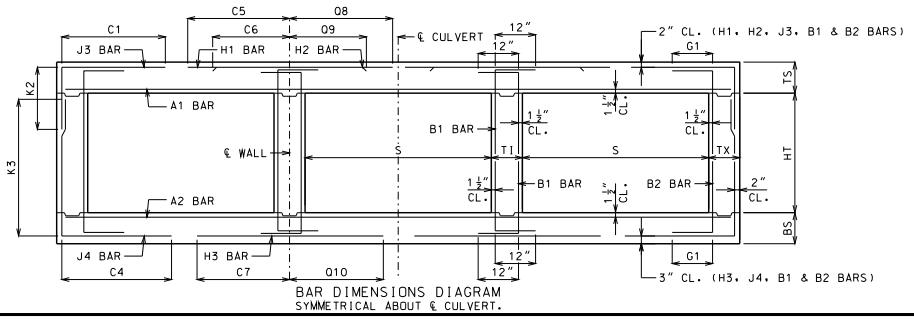


BAR DIMENSIONS DIAGRAM
SYMMETRICAL ABOUT ℄ CULVERT.

GENERAL NOTES:

IF DESIGN FILL IS BETWEEN TABULATED DESIGN FILLS, USE THE NEXT GREATER TABULATED DESIGN FILL, EXCEPT FOR DESIGN FILLS BETWEEN 2 FEET AND 4 FEET. FOR DESIGN FILLS BETWEEN 2 FEET AND 4 FEET USE THE GREATER MEMBER THICKNESS, AREA OF REINFORCEMENT AND BAR DIMENSIONS FROM THE 2 FEET AND 4 FEET TABULATED DESIGN FILLS. AREA OF REINFORCEMENT EQUALS BAR AREA PER FOOT SPACING.

SPECIAL DESIGNS ARE REQUIRED WHEN THE DESIGN FILL IS LESS THAN 1 FOOT OR GREATER THAN 50 FEET.

DIMENSIONS ARE IN INCHES UNLESS OTHERWISE SPECIFIED.

DESIGN FILLS ARE MEASURED FROM THE TOP OF TOP SLAB TO THE TOP OF EARTH FILL OR ROADWAY.

CULVERTS MEET STRENGTH AND SERVICEABILITY REQUIREMENTS FOR THE DESIGN VEHICULAR LIVE LOAD HL-93 MINUS THE LANE LOAD.


MISSOURI HIGHWAYS AND TRANSPORTATION COMMISSION
105 WEST CAPITOL
JEFFERSON CITY, MO 65102
1-888-ASK-MODOT (1-888-275-6636)


STATE OF MISSOURI
DENNIS W. HECKMAN
NUMBER PE-27141
PROFESSIONAL ENGINEER
THIS SHEET HAS BEEN SIGNED, SEALED AND DATED ELECTRONICALLY.

# CONCRETE TRIPLE BOX CULVERT

MEMBER THICKNESS
BAR SIZE, SPACING & DIMENSIONS

SPAN (S): 7 FEET
HEIGHT (HT): 9 THRU 10 FEET

DATE EFFECTIVE: 12/01/2011
DATE PREPARED: 9/29/2011

703.87

SHEET NO.
9 OF 27

IF A SEAL IS PRESENT ON THIS SHEET IT HAS BEEN ELECTRONICALLY SEALED AND DATED.

## SPAN (S) = 8 FT  HEIGHT (HT) = 4 FT OR 5 FT OR 6 FT

| DESIGN FILL | MEMBER THICKNESS | | | | TOP SLAB BARS | | | | | | | | | | | | | | BOTTOM SLAB BARS | | | | | | | | | | | | WALL BARS | | | | |
|---|---|---|---|---|---|---|---|---|---|---|---|---|---|---|---|---|---|---|---|---|---|---|---|---|---|---|---|---|---|---|---|---|---|---|---|
| | | | | | A1 BARS | | J3 BARS | | | K2 | | | H1 BARS | | | | H2 BARS | | | | A2 BARS | | J4 BARS | | | K3 | | | H3 BARS | | | | B1 BARS | | B2 BARS | | |
| | TS | BS | TX | TI | SIZE | SPA. | SIZE | SPA. | C1 | HT=4′ | HT=5′ | HT=6′ | SIZE | SPA. | C5 | Q8 | SIZE | SPA. | C6 | Q9 | SIZE | SPA. | SIZE | SPA. | C4 | HT=4′ | HT=5′ | HT=6′ | SIZE | SPA. | C7 | Q10 | SIZE | SPA. | SIZE | SPA. | G1 |
| 1 FT | 12 | 8 | 8 | 8 | 5 | 7 | 4 | 8.5 | 44.8 | 28.0 | 28.0 | 28.0 | 4 | 13 | 81.5 | 60.5 | 4 | 13 | 27.0 | 23.0 | 4 | 7.5 | 4 | 6.5 | 42.0 | 52 | 64 | 76 | 5 | 7 | 39.0 | 40.0 | 5 | 12 | 5 | 12 | 12 |
| 2 FT | 12 | 8 | 8 | 8 | 5 | 7 | 4 | 8.5 | 44.8 | 28.0 | 28.0 | 28.0 | 4 | 12 | 81.5 | 60.5 | 4 | 12 | 26.0 | 25.0 | 4 | 6.5 | 4 | 6.5 | 38.8 | 52 | 64 | 76 | 5 | 6.5 | 38.0 | 40.0 | 5 | 12 | 5 | 12 | 12 |
| 4 FT | 8 | 8 | 8 | 8 | 4 | 6 | 5 | 6 | 40.6 | 24.0 | 24.0 | 24.0 | 5 | 16 | 50.0 | 64.0 | 5 | 16 | 27.0 | 27.0 | 4 | 6 | 4 | 6 | 35.4 | 52 | 64 | 76 | 5 | 6 | 38.0 | 40.0 | 5 | 11 | 5 | 12 | 12 |
| 6 FT | 8 | 8 | 8 | 8 | 4 | 6 | 5 | 6.5 | 36.5 | 28.0 | 24.0 | 28.0 | 5 | 15 | 42.0 | 45.0 | 5 | 15 | 26.0 | 26.0 | 5 | 8.5 | 5 | 6.5 | 33.5 | 52 | 64 | 76 | 6 | 7 | 39.0 | 41.0 | 5 | 12 | 5 | 12 | 12 |
| 8 FT | 8 | 9 | 8 | 8 | 4 | 6 | 5 | 6 | 34.4 | 24.0 | 24.0 | 24.0 | 5 | 14 | 39.0 | 41.0 | 5 | 14 | 25.0 | 25.0 | 5 | 8 | 4 | 6.5 | 31.9 | 53 | 65 | 77 | 5 | 6 | 36.0 | 39.0 | 5 | 12 | 5 | 12 | 0 |
| 10 FT | 9 | 10 | 8 | 8 | 5 | 8.5 | 4 | 6 | 32.6 | 25.0 | 25.0 | 25.0 | 5 | 15 | 38.0 | 41.0 | 5 | 15 | 25.0 | 25.0 | 5 | 8 | 4 | 7.5 | 30.5 | 54 | 66 | 78 | 5 | 6 | 35.0 | 39.0 | 5 | 12 | 5 | 12 | 0 |
| 12 FT | 9 | 10 | 8 | 8 | 5 | 8.5 | 5 | 6.5 | 31.6 | 25.0 | 25.0 | 25.0 | 5 | 14 | 37.0 | 40.0 | 5 | 14 | 24.0 | 25.0 | 5 | 7 | 4 | 6.5 | 29.8 | 54 | 66 | 78 | 6 | 7 | 38.0 | 42.0 | 5 | 12 | 5 | 12 | 0 |
| 14 FT | 10 | 11 | 8 | 8 | 5 | 8 | 5 | 7.5 | 30.5 | 26.0 | 26.0 | 26.0 | 5 | 14 | 36.0 | 40.0 | 5 | 14 | 24.0 | 25.0 | 5 | 6.5 | 4 | 6.5 | 29.0 | 55 | 67 | 79 | 5 | 6 | 34.0 | 39.0 | 5 | 12 | 5 | 12 | 0 |
| 16 FT | 11 | 12 | 8 | 8 | 5 | 7.5 | 5 | 8.5 | 29.6 | 27.0 | 27.0 | 27.0 | 5 | 14 | 35.0 | 40.0 | 5 | 14 | 24.0 | 25.0 | 5 | 6.5 | 4 | 6.5 | 28.4 | 56 | 68 | 80 | 5 | 6 | 34.0 | 39.0 | 5 | 12 | 5 | 12 | 0 |
| 18 FT | 11 | 13 | 8 | 8 | 5 | 7.5 | 5 | 8 | 29.5 | 27.0 | 27.0 | 27.0 | 5 | 13 | 35.0 | 39.0 | 5 | 13 | 24.0 | 25.0 | 5 | 6 | 4 | 6.5 | 27.6 | 57 | 69 | 81 | 6 | 8 | 37.0 | 43.0 | 5 | 12 | 5 | 12 | 0 |
| 20 FT | 12 | 14 | 8 | 8 | 5 | 7 | 5 | 8.5 | 28.8 | 28.0 | 28.0 | 28.0 | 5 | 13 | 35.0 | 39.0 | 5 | 13 | 24.0 | 25.0 | 5 | 6 | 4 | 6.5 | 27.3 | 58 | 70 | 82 | 6 | 8 | 36.0 | 43.0 | 5 | 12 | 5 | 12 | 0 |
| 22 FT | 13 | 14 | 8 | 8 | 5 | 6.5 | 5 | 8.5 | 28.1 | 29.0 | 29.0 | 29.0 | 5 | 12 | 34.0 | 40.0 | 5 | 12 | 23.0 | 24.0 | 6 | 8 | 4 | 6 | 27.4 | 58 | 70 | 82 | 6 | 7.5 | 37.0 | 43.0 | 5 | 12 | 5 | 12 | 0 |
| 24 FT | 14 | 15 | 8 | 8 | 5 | 6 | 5 | 8.5 | 27.9 | 30.0 | 30.0 | 30.0 | 5 | 12 | 34.0 | 40.0 | 5 | 12 | 22.0 | 23.0 | 6 | 8 | 4 | 6 | 27.3 | 59 | 71 | 83 | 6 | 7.5 | 36.0 | 43.0 | 5 | 12 | 5 | 12 | 0 |
| 26 FT | 15 | 16 | 8 | 8 | 6 | 8.5 | 5 | 8 | 32.6 | 31.0 | 31.0 | 31.0 | 6 | 16 | 42.0 | 49.0 | 6 | 16 | 30.0 | 32.0 | 6 | 8 | 4 | 6 | 27.3 | 60 | 72 | 84 | 6 | 7.5 | 36.0 | 43.0 | 5 | 12 | 5 | 12 | 0 |
| 28 FT | 15 | 16 | 8 | 8 | 6 | 8 | 5 | 8 | 31.6 | 31.0 | 31.0 | 31.0 | 6 | 16 | 42.0 | 48.0 | 6 | 16 | 31.0 | 32.0 | 6 | 7.5 | 4 | 6 | 26.1 | 60 | 72 | 84 | 6 | 7 | 36.0 | 43.0 | 5 | 12 | 5 | 12 | 0 |
| 30 FT | 16 | 17 | 8 | 8 | 6 | 8 | 5 | 7 | 31.5 | 32.0 | 32.0 | 32.0 | 6 | 15 | 42.0 | 48.0 | 6 | 15 | 30.0 | 31.0 | 6 | 7.5 | 4 | 6 | 26.3 | 61 | 73 | 85 | 6 | 7 | 36.0 | 43.0 | 5 | 12 | 5 | 12 | 0 |
| 32 FT | 16 | 18 | 8 | 8 | 6 | 7.5 | 5 | 7 | 31.6 | 32.0 | 36.0 | 36.0 | 6 | 15 | 42.0 | 48.0 | 6 | 15 | 31.0 | 32.0 | 6 | 7.5 | 5 | 6.5 | 26.1 | 62 | 74 | 86 | 6 | 7 | 36.0 | 43.0 | 5 | 12 | 5 | 12 | 0 |
| 34 FT | 17 | 19 | 8 | 8 | 6 | 7.5 | 5 | 6.5 | 31.6 | 37.0 | 37.0 | 37.0 | 6 | 14 | 42.0 | 48.0 | 6 | 14 | 30.0 | 31.0 | 6 | 7.5 | 5 | 6.5 | 26.3 | 63 | 75 | 87 | 6 | 7 | 36.0 | 43.0 | 5 | 12 | 5 | 11.5 | 0 |
| 36 FT | 18 | 19 | 8 | 8 | 6 | 7.5 | 5 | 6.5 | 31.5 | 38.0 | 38.0 | 38.0 | 6 | 14 | 42.0 | 48.0 | 6 | 14 | 30.0 | 31.0 | 6 | 7.5 | 5 | 6.5 | 26.4 | 63 | 75 | 87 | 6 | 7 | 36.0 | 43.0 | 5 | 12 | 5 | 10.5 | 0 |
| 38 FT | 18 | 20 | 8 | 8 | 6 | 7 | 5 | 6.5 | 31.6 | 38.0 | 38.0 | 38.0 | 6 | 13 | 42.0 | 48.0 | 6 | 13 | 30.0 | 31.0 | 6 | 7.5 | 5 | 6 | 26.4 | 64 | 76 | 88 | 6 | 7 | 36.0 | 43.0 | 5 | 12 | 5 | 10 | 0 |
| 40 FT | 19 | 20 | 8 | 8 | 6 | 7 | 5 | 6 | 31.6 | 39.0 | 39.0 | 39.0 | 6 | 13 | 42.0 | 48.0 | 6 | 13 | 29.0 | 31.0 | 6 | 6.5 | 5 | 6 | 26.5 | 64 | 76 | 88 | 6 | 6.5 | 36.0 | 43.0 | 5 | 12 | 5 | 9.5 | 0 |
| 42 FT | 19 | 21 | 8 | 8 | 6 | 6 | 5 | 6 | 31.8 | 39.0 | 39.0 | 39.0 | 6 | 12 | 42.0 | 48.0 | 6 | 12 | 30.0 | 31.0 | 6 | 7 | 6 | 7.5 | 29.6 | 65 | 77 | 89 | 6 | 6.5 | 36.0 | 43.0 | 5 | 12 | 5 | 9.5 | 0 |
| 44 FT | 20 | 22 | 8 | 8 | 6 | 6.5 | 6 | 7.5 | 35.9 | 44.0 | 44.0 | 44.0 | 6 | 13 | 41.0 | 48.0 | 6 | 13 | 29.0 | 30.0 | 6 | 7 | 6 | 7 | 29.8 | 66 | 78 | 90 | 6 | 6.5 | 36.0 | 43.0 | 5 | 12 | 5 | 9.5 | 0 |
| 46 FT | 21 | 22 | 8 | 8 | 6 | 6.5 | 6 | 7 | 35.8 | 45.0 | 45.0 | 45.0 | 6 | 13 | 41.0 | 48.0 | 6 | 13 | 29.0 | 30.0 | 6 | 6.5 | 6 | 7 | 29.9 | 66 | 78 | 90 | 6 | 6.5 | 36.0 | 43.0 | 5 | 12 | 5 | 9.5 | 0 |
| 48 FT | 21 | 23 | 8 | 8 | 6 | 6.5 | 6 | 7 | 36.0 | 45.0 | 45.0 | 45.0 | 6 | 13 | 41.0 | 48.0 | 6 | 13 | 29.0 | 30.0 | 6 | 7 | 6 | 6.5 | 30.0 | 67 | 79 | 91 | 6 | 6.5 | 36.0 | 43.0 | 5 | 12 | 5 | 9.5 | 0 |
| 50 FT | 22 | 23 | 8 | 8 | 6 | 6.5 | 6 | 6.5 | 35.9 | 46.0 | 46.0 | 46.0 | 6 | 13 | 41.0 | 47.0 | 6 | 13 | 29.0 | 30.0 | 6 | 6.5 | 6 | 6.5 | 30.1 | 67 | 79 | 91 | 6 | 6 | 36.0 | 43.0 | 5 | 12 | 5 | 9 | 0 |

## SPAN (S) = 8 FT  HEIGHT (HT) = 7 FT OR 8 FT OR 9 FT

| DESIGN FILL | MEMBER THICKNESS | | | | TOP SLAB BARS | | | | | | | | | | | | | | BOTTOM SLAB BARS | | | | | | | | | | | | WALL BARS | | | | |
|---|---|---|---|---|---|---|---|---|---|---|---|---|---|---|---|---|---|---|---|---|---|---|---|---|---|---|---|---|---|---|---|---|---|---|---|
| | | | | | A1 BARS | | J3 BARS | | | K2 | | | H1 BARS | | | | H2 BARS | | | | A2 BARS | | J4 BARS | | | K3 | | | H3 BARS | | | | B1 BARS | | B2 BARS | | |
| | TS | BS | TX | TI | SIZE | SPA. | SIZE | SPA. | C1 | HT=7′ | HT=8′ | HT=9′ | SIZE | SPA. | C5 | Q8 | SIZE | SPA. | C6 | Q9 | SIZE | SPA. | SIZE | SPA. | C4 | HT=7′ | HT=8′ | HT=9′ | SIZE | SPA. | C7 | Q10 | SIZE | SPA. | SIZE | SPA. | G1 |
| 1 FT | 12 | 9 | 8 | 8 | 5 | 7 | 4 | 6 | 44.8 | 28.0 | 28.0 | 28.0 | 4 | 13 | 81.5 | 60.5 | 4 | 13 | 27.0 | 25.0 | 4 | 7.5 | 4 | 6 | 66.0 | 89 | 101 | 113 | 5 | 8 | 41.0 | 41.0 | 5 | 12 | 5 | 12 | 12 |
| 2 FT | 12 | 9 | 8 | 8 | 5 | 7 | 4 | 6 | 44.8 | 28.0 | 28.0 | 28.0 | 4 | 12 | 81.5 | 60.5 | 4 | 12 | 26.0 | 24.0 | 4 | 6.5 | 5 | 6.5 | 61.3 | 89 | 101 | 113 | 5 | 7.5 | 39.0 | 41.0 | 5 | 12 | 5 | 12 | 12 |
| 4 FT | 8 | 8 | 8 | 8 | 4 | 6 | 6 | 7.5 | 47.8 | 28.0 | 32.0 | 32.0 | 5 | 16 | 83.5 | 64.0 | 5 | 16 | 27.0 | 28.0 | 5 | 8.5 | 6 | 6 | 55.0 | 88 | 100 | 112 | 5 | 6 | 38.0 | 40.0 | 5 | 12 | 5 | 12 | 12 |
| 6 FT | 8 | 9 | 8 | 8 | 4 | 6 | 6 | 7.5 | 52.5 | 24.0 | 28.0 | 32.0 | 5 | 15 | 44.0 | 47.0 | 5 | 15 | 26.0 | 26.0 | 5 | 8.5 | 6 | 6.5 | 52.3 | 89 | 101 | 113 | 5 | 6.5 | 37.0 | 40.0 | 5 | 12 | 5 | 12 | 12 |
| 8 FT | 8 | 9 | 8 | 8 | 4 | 6 | 6 | 7.5 | 47.4 | 24.0 | 28.0 | 32.0 | 5 | 14 | 40.0 | 42.0 | 5 | 14 | 25.0 | 25.0 | 5 | 7.5 | 6 | 6 | 48.1 | 89 | 101 | 113 | 5 | 6 | 36.0 | 39.0 | 5 | 12 | 5 | 11.5 | 0 |
| 10 FT | 9 | 10 | 8 | 8 | 5 | 8.5 | 6 | 7 | 46.3 | 25.0 | 29.0 | 33.0 | 5 | 15 | 39.0 | 41.0 | 5 | 15 | 25.0 | 25.0 | 5 | 7.5 | 6 | 6.5 | 46.9 | 90 | 102 | 114 | 5 | 6 | 35.0 | 39.0 | 5 | 12 | 5 | 11 | 0 |
| 12 FT | 9 | 10 | 8 | 8 | 5 | 8.5 | 6 | 7 | 44.8 | 29.0 | 33.0 | 33.0 | 5 | 14 | 37.0 | 40.0 | 5 | 14 | 24.0 | 25.0 | 5 | 6.5 | 6 | 6 | 45.4 | 90 | 102 | 114 | 6 | 7 | 38.0 | 42.0 | 5 | 12 | 5 | 10 | 0 |
| 14 FT | 10 | 11 | 8 | 8 | 5 | 8 | 6 | 6.5 | 44.1 | 30.0 | 30.0 | 34.0 | 5 | 14 | 37.0 | 40.0 | 5 | 14 | 24.0 | 25.0 | 5 | 6.5 | 6 | 6 | 44.9 | 91 | 103 | 115 | 5 | 6 | 35.0 | 39.0 | 5 | 12 | 5 | 9.5 | 0 |
| 16 FT | 11 | 12 | 8 | 8 | 5 | 7.5 | 6 | 6.5 | 43.6 | 31.0 | 31.0 | 35.0 | 5 | 14 | 36.0 | 40.0 | 5 | 14 | 24.0 | 25.0 | 5 | 6.5 | 6 | 6.5 | 44.4 | 92 | 104 | 116 | 5 | 6 | 34.0 | 39.0 | 5 | 12 | 5 | 9.5 | 0 |
| 18 FT | 11 | 13 | 8 | 8 | 5 | 7.5 | 6 | 6 | 42.8 | 31.0 | 31.0 | 35.0 | 5 | 13 | 35.0 | 39.0 | 5 | 13 | 24.0 | 25.0 | 5 | 6 | 6 | 6.5 | 43.9 | 93 | 105 | 117 | 6 | 8 | 37.0 | 43.0 | 5 | 12 | 5 | 9.5 | 0 |
| 20 FT | 12 | 14 | 8 | 8 | 5 | 7 | 6 | 6 | 42.4 | 32.0 | 32.0 | 36.0 | 5 | 13 | 35.0 | 39.0 | 5 | 13 | 24.0 | 25.0 | 5 | 6 | 6 | 6.5 | 43.4 | 94 | 106 | 118 | 6 | 8 | 37.0 | 43.0 | 5 | 12 | 5 | 9.5 | 0 |
| 22 FT | 13 | 14 | 8 | 8 | 5 | 6.5 | 6 | 6 | 42.1 | 33.0 | 33.0 | 37.0 | 5 | 12 | 35.0 | 39.0 | 5 | 12 | 23.0 | 24.0 | 6 | 8 | 6 | 6 | 43.0 | 94 | 106 | 118 | 6 | 7.5 | 37.0 | 43.0 | 5 | 12 | 5 | 9 | 0 |
| 24 FT | 14 | 15 | 10 | 8 | 5 | 6 | 5 | 6.5 | 40.0 | 34.0 | 34.0 | 34.0 | 5 | 12 | 34.0 | 39.0 | 5 | 12 | 22.0 | 23.0 | 6 | 8.5 | 5 | 7 | 40.4 | 95 | 107 | 119 | 6 | 7 | 37.0 | 43.0 | 5 | 12 | 5 | 8 | 0 |
| 26 FT | 14 | 16 | 10 | 8 | 5 | 6 | 5 | 6 | 39.8 | 34.0 | 34.0 | 34.0 | 5 | 12 | 34.0 | 39.0 | 5 | 12 | 22.0 | 24.0 | 6 | 8 | 5 | 7 | 40.4 | 96 | 108 | 120 | 6 | 7.5 | 37.0 | 43.0 | 5 | 12 | 5 | 8 | 0 |
| 28 FT | 15 | 16 | 10 | 8 | 6 | 8 | 5 | 6.5 | 43.0 | 35.0 | 35.0 | 35.0 | 6 | 16 | 42.0 | 48.0 | 6 | 16 | 30.0 | 32.0 | 6 | 7.5 | 5 | 7 | 38.4 | 96 | 108 | 120 | 6 | 7 | 37.0 | 43.0 | 5 | 12 | 5 | 8 | 0 |
| 30 FT | 15 | 17 | 11 | 8 | 6 | 7.5 | 5 | 6.5 | 43.5 | 31.0 | 35.0 | 35.0 | 6 | 15 | 42.0 | 47.0 | 6 | 15 | 31.0 | 32.0 | 6 | 8 | 5 | 7 | 38.8 | 97 | 109 | 121 | 6 | 7 | 37.0 | 43.0 | 5 | 12 | 5 | 8.5 | 0 |
| 32 FT | 16 | 18 | 11 | 8 | 6 | 8 | 5 | 6 | 43.8 | 32.0 | 36.0 | 36.0 | 6 | 15 | 42.0 | 47.0 | 6 | 15 | 30.0 | 32.0 | 6 | 8 | 5 | 7 | 39.0 | 98 | 110 | 122 | 6 | 7 | 37.0 | 43.0 | 5 | 12 | 5 | 8 | 0 |
| 34 FT | 17 | 19 | 11 | 8 | 6 | 7.5 | 5 | 6 | 43.9 | 33.0 | 37.0 | 37.0 | 6 | 14 | 42.0 | 47.0 | 6 | 14 | 30.0 | 31.0 | 6 | 8 | 5 | 7 | 39.3 | 99 | 111 | 123 | 6 | 7 | 37.0 | 43.0 | 5 | 12 | 5 | 7.5 | 0 |
| 36 FT | 17 | 19 | 12 | 8 | 6 | 7 | 5 | 6 | 44.4 | 33.0 | 37.0 | 37.0 | 6 | 14 | 42.0 | 47.0 | 6 | 14 | 30.0 | 31.0 | 6 | 7.5 | 5 | 6.5 | 39.3 | 99 | 111 | 123 | 6 | 6.5 | 37.0 | 43.0 | 5 | 12 | 5 | 8 | 0 |
| 38 FT | 18 | 20 | 12 | 8 | 6 | 7.5 | 5 | 6 | 44.6 | 38.0 | 38.0 | 38.0 | 6 | 13 | 42.0 | 47.0 | 6 | 13 | 29.0 | 31.0 | 6 | 7.5 | 5 | 6.5 | 39.6 | 100 | 112 | 124 | 6 | 6.5 | 37.0 | 43.0 | 5 | 12 | 5 | 7.5 | 0 |
| 40 FT | 19 | 20 | 12 | 8 | 6 | 7 | 5 | 6 | 44.6 | 39.0 | 39.0 | 39.0 | 6 | 14 | 42.0 | 47.0 | 6 | 14 | 29.0 | 30.0 | 6 | 6.5 | 5 | 6.5 | 39.6 | 100 | 112 | 124 | 6 | 6.5 | 37.0 | 43.0 | 5 | 12 | 5 | 7 | 0 |
| 42 FT | 19 | 21 | 12 | 8 | 6 | 7 | 6 | 7.5 | 48.8 | 39.0 | 39.0 | 39.0 | 6 | 13 | 42.0 | 47.0 | 6 | 13 | 29.0 | 30.0 | 6 | 7 | 5 | 6.5 | 39.8 | 101 | 113 | 125 | 6 | 6.5 | 37.0 | 43.0 | 5 | 12 | 5 | 7 | 0 |
| 44 FT | 20 | 22 | 13 | 8 | 6 | 7 | 5 | 6 | 45.5 | 40.0 | 40.0 | 40.0 | 6 | 14 | 41.0 | 46.0 | 6 | 14 | 29.0 | 30.0 | 6 | 7 | 5 | 6 | 40.3 | 102 | 114 | 126 | 6 | 6.5 | 37.0 | 44.0 | 5 | 12 | 5 | 7 | 0 |
| 46 FT | 20 | 22 | 13 | 8 | 6 | 6.5 | 6 | 8 | 49.5 | 40.0 | 40.0 | 40.0 | 6 | 13 | 41.0 | 46.0 | 6 | 13 | 29.0 | 30.0 | 6 | 7 | 5 | 6 | 40.3 | 102 | 114 | 126 | 6 | 6 | 37.0 | 44.0 | 5 | 12 | 5 | 6.5 | 0 |
| 48 FT | 21 | 23 | 13 | 8 | 6 | 6.5 | 6 | 8 | 49.6 | 41.0 | 41.0 | 41.0 | 6 | 13 | 41.0 | 46.0 | 6 | 13 | 29.0 | 30.0 | 6 | 7 | 5 | 6 | 40.5 | 103 | 115 | 127 | 6 | 6.5 | 37.0 | 44.0 | 5 | 12 | 5 | 6.5 | 0 |
| 50 FT | 21 | 23 | 13 | 8 | 6 | 6.5 | 6 | 7 | 49.6 | 41.0 | 41.0 | 41.0 | 6 | 13 | 41.0 | 46.0 | 6 | 13 | 29.0 | 30.0 | 6 | 6 | 5 | 6 | 40.5 | 103 | 115 | 127 | 6 | 6 | 37.0 | 44.0 | 5 | 12 | 5 | 6.5 | 0 |

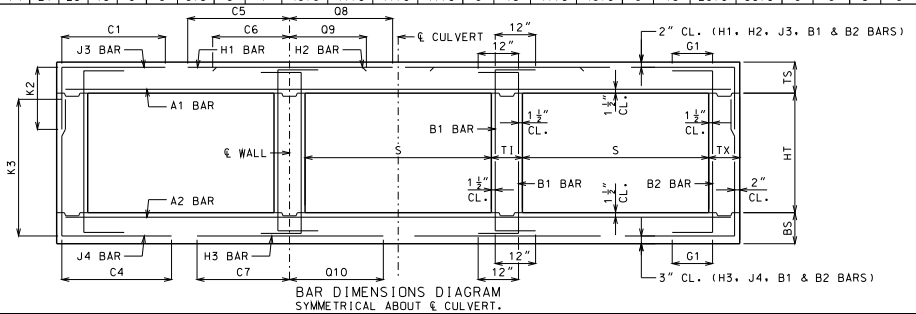


BAR DIMENSIONS DIAGRAM
SYMMETRICAL ABOUT ℄ CULVERT.

GENERAL NOTES:

IF DESIGN FILL IS BETWEEN TABULATED DESIGN FILLS, USE THE NEXT GREATER TABULATED DESIGN FILL, EXCEPT FOR DESIGN FILLS BETWEEN 2 FEET AND 4 FEET. FOR DESIGN FILLS BETWEEN 2 FEET AND 4 FEET USE THE GREATER MEMBER THICKNESS, AREA OF REINFORCEMENT AND BAR DIMENSIONS FROM THE 2 FEET AND 4 FEET TABULATED DESIGN FILLS. AREA OF REINFORCEMENT EQUALS BAR AREA PER FOOT SPACING.

SPECIAL DESIGNS ARE REQUIRED WHEN THE DESIGN FILL IS LESS THAN 1 FOOT OR GREATER THAN 50 FEET.

DIMENSIONS ARE IN INCHES UNLESS OTHERWISE SPECIFIED.

DESIGN FILLS ARE MEASURED FROM THE TOP OF TOP SLAB TO THE TOP OF EARTH FILL OR ROADWAY.

CULVERTS MEET STRENGTH AND SERVICEABILITY REQUIREMENTS FOR THE DESIGN VEHICULAR LIVE LOAD HL-93 MINUS THE LANE LOAD.


MISSOURI HIGHWAYS AND TRANSPORTATION COMMISSION
105 WEST CAPITOL
JEFFERSON CITY, MO 65102
1-888-ASK-MODOT (1-888-275-6636)


STATE OF MISSOURI — DENNIS W. HECKMAN — NUMBER PE-27141 — PROFESSIONAL ENGINEER
THIS SHEET HAS BEEN SIGNED, SEALED AND DATED ELECTRONICALLY.

# CONCRETE TRIPLE BOX CULVERT

MEMBER THICKNESS
BAR SIZE, SPACING & DIMENSIONS

SPAN (S): 8 FEET
HEIGHT (HT): 4 THRU 9 FEET

DATE EFFECTIVE: 12/01/2011
DATE PREPARED: 9/29/2011

703.87

SHEET NO. 10 OF 27

IF A SEAL IS PRESENT ON THIS SHEET IT HAS BEEN ELECTRONICALLY SEALED AND DATED.

SPAN (S) = 8 FT  HEIGHT (HT) = 10 FT OR 11 FT

| DESIGN FILL | MEMBER THICKNESS | | | | TOP SLAB BARS | | | | | | | | | | | | | | BOTTOM SLAB BARS | | | | | | | | | | WALL BARS | | | | |
|---|---|---|---|---|---|---|---|---|---|---|---|---|---|---|---|---|---|---|---|---|---|---|---|---|---|---|---|---|---|---|---|---|---|
| | | | | | A1 BARS | | J3 BARS | | | | | H1 BARS | | | | H2 BARS | | | | A2 BARS | | J4 BARS | | | | H3 BARS | | | | B1 BARS | | B2 BARS | |
| | TS | BS | TX | TI | SIZE | SPA. | SIZE | SPA. | C1 | K2 HT=10' | K2 HT=11' | SIZE | SPA. | C5 | Q8 | SIZE | SPA. | C6 | Q9 | SIZE | SPA. | SIZE | SPA. | C4 | K3 HT=10' | K3 HT=11' | SIZE | SPA. | C7 | Q10 | SIZE | SPA. | SIZE | SPA. | G1 |
| 1 FT | 12 | 9 | 8 | 9 | 5 | 7 | 5 | 7 | 44.9 | 32.0 | 32.0 | 4 | 13 | 81.5 | 61.5 | 4 | 13 | 28.0 | 26.0 | 4 | 6.5 | 6 | 6 | 69.3 | 125 | 137 | 5 | 7.5 | 43.0 | 42.0 | 5 | 11.5 | 5 | 10 | 12 |
| 2 FT | 12 | 9 | 9 | 9 | 5 | 7 | 5 | 8 | 45.5 | 32.0 | 32.0 | 4 | 12 | 82.5 | 61.5 | 4 | 12 | 27.0 | 24.0 | 4 | 6.5 | 6 | 6.5 | 70.0 | 125 | 137 | 5 | 7 | 41.0 | 41.0 | 5 | 11.5 | 5 | 10.5 | 12 |
| 4 FT | 8 | 9 | 10 | 9 | 4 | 6 | 6 | 7 | 49.1 | 28.0 | 28.0 | 5 | 16 | 84.5 | 65.0 | 5 | 16 | 27.0 | 27.0 | 4 | 6 | 5 | 6 | 65.8 | 125 | 137 | 5 | 7 | 39.0 | 41.0 | 5 | 11.5 | 5 | 9.5 | 12 |
| 6 FT | 8 | 9 | 11 | 9 | 4 | 6 | 5 | 6 | 57.1 | 28.0 | 28.0 | 5 | 16 | 44.0 | 44.0 | 5 | 16 | 26.0 | 26.0 | 5 | 9 | 5 | 6 | 56.6 | 125 | 137 | 5 | 6.5 | 37.0 | 39.0 | 5 | 11.5 | 5 | 9.5 | 12 |
| 8 FT | 8 | 10 | 11 | 9 | 4 | 6 | 6 | 7 | 54.8 | 28.0 | 28.0 | 5 | 15 | 41.0 | 41.0 | 5 | 15 | 25.0 | 26.0 | 5 | 9 | 5 | 6.5 | 56.4 | 126 | 138 | 5 | 6.5 | 37.0 | 39.0 | 5 | 12 | 5 | 9 | 0 |
| 10 FT | 8 | 10 | 11 | 9 | 4 | 6 | 6 | 6.5 | 51.9 | 28.0 | 28.0 | 5 | 14 | 39.0 | 40.0 | 5 | 14 | 25.0 | 25.0 | 5 | 7.5 | 5 | 6 | 54.0 | 126 | 138 | 5 | 6 | 36.0 | 39.0 | 5 | 12 | 5 | 8.5 | 0 |
| 12 FT | 9 | 11 | 11 | 9 | 5 | 8.5 | 6 | 7 | 52.5 | 29.0 | 29.0 | 5 | 14 | 38.0 | 39.0 | 5 | 14 | 25.0 | 25.0 | 5 | 7.5 | 5 | 6 | 53.9 | 127 | 139 | 5 | 6 | 36.0 | 39.0 | 5 | 12 | 5 | 8 | 0 |
| 14 FT | 10 | 11 | 11 | 9 | 5 | 8 | 5 | 6 | 50.1 | 30.0 | 30.0 | 5 | 15 | 37.0 | 39.0 | 5 | 15 | 25.0 | 25.0 | 5 | 7 | 5 | 6 | 51.9 | 127 | 139 | 5 | 6 | 35.0 | 39.0 | 5 | 12 | 5 | 7.5 | 0 |
| 16 FT | 10 | 12 | 11 | 9 | 5 | 7.5 | 5 | 6 | 48.3 | 30.0 | 30.0 | 5 | 13 | 36.0 | 39.0 | 5 | 13 | 24.0 | 25.0 | 5 | 6.5 | 5 | 6 | 52.3 | 128 | 140 | 5 | 6 | 35.0 | 39.0 | 5 | 12 | 5 | 7.5 | 0 |
| 18 FT | 11 | 13 | 11 | 9 | 5 | 7.5 | 5 | 6.5 | 48.6 | 31.0 | 31.0 | 5 | 14 | 36.0 | 39.0 | 5 | 14 | 24.0 | 25.0 | 5 | 6.5 | 6 | 7 | 55.0 | 129 | 141 | 6 | 8 | 38.0 | 42.0 | 5 | 12 | 5 | 7.5 | 0 |
| 20 FT | 12 | 14 | 11 | 9 | 5 | 7 | 5 | 6 | 48.8 | 32.0 | 32.0 | 5 | 13 | 35.0 | 39.0 | 5 | 13 | 24.0 | 25.0 | 5 | 6.5 | 6 | 7 | 54.9 | 130 | 142 | 6 | 8 | 38.0 | 43.0 | 5 | 12 | 5 | 7.5 | 0 |
| 22 FT | 13 | 15 | 11 | 9 | 5 | 6.5 | 6 | 8 | 52.1 | 33.0 | 37.0 | 5 | 12 | 35.0 | 39.0 | 5 | 12 | 23.0 | 24.0 | 5 | 6 | 6 | 7 | 54.9 | 131 | 143 | 6 | 8 | 38.0 | 43.0 | 5 | 12 | 5 | 7.5 | 0 |
| 24 FT | 13 | 15 | 12 | 9 | 5 | 6.5 | 5 | 6 | 48.3 | 33.0 | 33.0 | 5 | 12 | 35.0 | 38.0 | 5 | 12 | 23.0 | 25.0 | 5 | 6 | 6 | 7.5 | 53.9 | 131 | 143 | 6 | 7 | 38.0 | 43.0 | 5 | 12 | 5 | 7 | 0 |
| 26 FT | 14 | 16 | 12 | 9 | 5 | 6 | 6 | 8 | 51.8 | 34.0 | 38.0 | 5 | 12 | 35.0 | 38.0 | 5 | 12 | 22.0 | 24.0 | 5 | 6 | 6 | 7.5 | 54.1 | 132 | 144 | 6 | 7.5 | 38.0 | 43.0 | 5 | 12 | 5 | 7 | 0 |
| 28 FT | 15 | 16 | 12 | 9 | 5 | 6 | 6 | 8 | 56.1 | 35.0 | 39.0 | 6 | 16 | 43.0 | 47.0 | 6 | 16 | 31.0 | 32.0 | 6 | 7.5 | 6 | 8 | 51.0 | 132 | 144 | 6 | 7 | 38.0 | 43.0 | 5 | 12 | 5 | 7 | 0 |
| 30 FT | 15 | 17 | 12 | 9 | 6 | 8 | 6 | 7 | 55.9 | 35.0 | 39.0 | 6 | 16 | 43.0 | 47.0 | 6 | 16 | 31.0 | 32.0 | 6 | 8 | 6 | 7.5 | 51.5 | 133 | 145 | 6 | 7 | 38.0 | 43.0 | 5 | 12 | 5 | 7 | 0 |
| 32 FT | 16 | 18 | 13 | 9 | 6 | 8 | 6 | 8 | 56.5 | 36.0 | 40.0 | 6 | 15 | 42.0 | 47.0 | 6 | 15 | 30.0 | 31.0 | 6 | 8 | 6 | 8.5 | 51.8 | 134 | 146 | 6 | 7 | 38.0 | 43.0 | 5 | 12 | 5 | 6.5 | 0 |
| 34 FT | 17 | 19 | 13 | 9 | 6 | 8 | 6 | 7.5 | 56.9 | 37.0 | 41.0 | 6 | 14 | 42.0 | 47.0 | 6 | 14 | 30.0 | 31.0 | 6 | 8 | 6 | 8.5 | 52.3 | 135 | 147 | 6 | 7 | 38.0 | 43.0 | 5 | 12 | 5 | 6.5 | 0 |
| 36 FT | 17 | 19 | 14 | 9 | 6 | 7.5 | 6 | 7.5 | 57.0 | 37.0 | 41.0 | 6 | 14 | 42.0 | 46.0 | 6 | 14 | 30.0 | 31.0 | 6 | 7.5 | 6 | 8 | 51.9 | 135 | 147 | 6 | 6.5 | 38.0 | 43.0 | 5 | 12 | 5 | 6 | 0 |
| 38 FT | 18 | 20 | 14 | 9 | 6 | 7.5 | 6 | 7.5 | 57.4 | 38.0 | 42.0 | 6 | 14 | 42.0 | 46.0 | 6 | 14 | 30.0 | 31.0 | 6 | 7.5 | 6 | 8 | 52.3 | 136 | 148 | 6 | 7 | 38.0 | 43.0 | 5 | 12 | 5 | 6 | 0 |
| 40 FT | 18 | 20 | 14 | 9 | 6 | 7 | 6 | 6.5 | 57.3 | 38.0 | 42.0 | 6 | 13 | 42.0 | 46.0 | 6 | 13 | 30.0 | 31.0 | 6 | 6.5 | 6 | 8 | 52.1 | 136 | 148 | 6 | 6.5 | 38.0 | 43.0 | 5 | 12 | 5 | 6 | 0 |
| 42 FT | 19 | 21 | 15 | 9 | 6 | 7 | 6 | 7 | 57.9 | 43.0 | 43.0 | 6 | 14 | 42.0 | 46.0 | 6 | 14 | 30.0 | 30.0 | 6 | 7 | 6 | 8 | 52.6 | 137 | 149 | 6 | 6.5 | 38.0 | 43.0 | 5 | 12 | 6 | 8 | 0 |
| 44 FT | 19 | 22 | 15 | 9 | 6 | 7 | 6 | 7 | 57.9 | 43.0 | 43.0 | 6 | 13 | 42.0 | 46.0 | 6 | 13 | 30.0 | 30.0 | 6 | 7 | 6 | 8 | 53.0 | 138 | 150 | 6 | 6.5 | 38.0 | 43.0 | 5 | 12 | 6 | 8 | 0 |
| 46 FT | 20 | 22 | 15 | 9 | 6 | 7 | 6 | 6 | 58.1 | 44.0 | 44.0 | 6 | 14 | 42.0 | 45.0 | 6 | 14 | 30.0 | 30.0 | 6 | 7 | 6 | 7.5 | 52.9 | 138 | 150 | 6 | 6.5 | 38.0 | 43.0 | 5 | 12 | 6 | 8 | 0 |
| 48 FT | 20 | 23 | 16 | 9 | 6 | 6.5 | 6 | 7 | 58.5 | 44.0 | 44.0 | 6 | 13 | 42.0 | 45.0 | 6 | 13 | 30.0 | 30.0 | 6 | 7 | 6 | 7.5 | 53.3 | 139 | 151 | 6 | 6.5 | 38.0 | 44.0 | 5 | 12 | 6 | 8 | 0 |
| 50 FT | 21 | 23 | 16 | 9 | 6 | 6.5 | 6 | 6.5 | 58.9 | 45.0 | 45.0 | 6 | 13 | 42.0 | 45.0 | 6 | 13 | 29.0 | 30.0 | 6 | 6.5 | 6 | 7.5 | 53.3 | 139 | 151 | 6 | 6 | 38.0 | 44.0 | 5 | 12 | 6 | 8 | 0 |

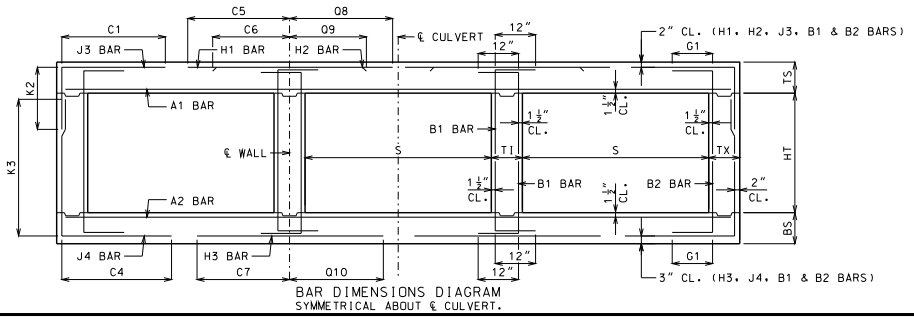


BAR DIMENSIONS DIAGRAM
SYMMETRICAL ABOUT ℄ CULVERT.

GENERAL NOTES:

IF DESIGN FILL IS BETWEEN TABULATED DESIGN FILLS, USE THE NEXT GREATER TABULATED DESIGN FILL, EXCEPT FOR DESIGN FILLS BETWEEN 2 FEET AND 4 FEET. FOR DESIGN FILLS BETWEEN 2 FEET AND 4 FEET USE THE GREATER MEMBER THICKNESS, AREA OF REINFORCEMENT AND BAR DIMENSIONS FROM THE 2 FEET AND 4 FEET TABULATED DESIGN FILLS. AREA OF REINFORCEMENT EQUALS BAR AREA PER FOOT SPACING.

SPECIAL DESIGNS ARE REQUIRED WHEN THE DESIGN FILL IS LESS THAN 1 FOOT OR GREATER THAN 50 FEET.

DIMENSIONS ARE IN INCHES UNLESS OTHERWISE SPECIFIED.

DESIGN FILLS ARE MEASURED FROM THE TOP OF TOP SLAB TO THE TOP OF EARTH FILL OR ROADWAY.

CULVERTS MEET STRENGTH AND SERVICEABILITY REQUIREMENTS FOR THE DESIGN VEHICULAR LIVE LOAD HL-93 MINUS THE LANE LOAD.


MISSOURI HIGHWAYS AND TRANSPORTATION COMMISSION
105 WEST CAPITOL
JEFFERSON CITY, MO 65102
1-888-ASK-MODOT (1-888-275-6636)


STATE OF MISSOURI
DENNIS W. HECKMAN
NUMBER PE-27141
PROFESSIONAL ENGINEER
THIS SHEET HAS BEEN SIGNED, SEALED AND DATED ELECTRONICALLY.

# CONCRETE TRIPLE BOX CULVERT

MEMBER THICKNESS
BAR SIZE, SPACING & DIMENSIONS

SPAN (S): 8 FEET
HEIGHT (HT): 10 THRU 11 FEET

DATE EFFECTIVE: 12/01/2011
DATE PREPARED: 9/29/2011

703.87

SHEET NO.
11 OF 27

IF A SEAL IS PRESENT ON THIS SHEET IT HAS BEEN ELECTRONICALLY SEALED AND DATED.

## SPAN (S) = 9 FT  HEIGHT (HT) = 5 FT OR 6 FT OR 7 FT

| DESIGN FILL | MEMBER THICKNESS | | | | TOP SLAB BARS | | | | | | | | | | | | | | BOTTOM SLAB BARS | | | | | | | | | | | | WALL BARS | | | | |
|---|---|---|---|---|---|---|---|---|---|---|---|---|---|---|---|---|---|---|---|---|---|---|---|---|---|---|---|---|---|---|---|---|---|---|---|
| | | | | | A1 BARS | | J3 BARS | | | | | | H1 BARS | | | | H2 BARS | | | | A2 BARS | | J4 BARS | | | | | | H3 BARS | | | | B1 BARS | | B2 BARS | |
| | | | | | | | | | | K2 | | | | | | | | | | | | | | | K3 | | | | | | | | | |
| | TS | BS | TX | TI | SIZE | SPA. | SIZE | SPA. | C1 | HT=5′ | HT=6′ | HT=7′ | SIZE | SPA. | C5 | Q8 | SIZE | SPA. | C6 | Q9 | SIZE | SPA. | SIZE | SPA. | C4 | HT=5′ | HT=6′ | HT=7′ | SIZE | SPA. | C7 | Q10 | SIZE | SPA. | SIZE | SPA. | G1 |
| 1 FT | 13 | 8 | 8 | 8 | 5 | 6.5 | 4 | 7.5 | 48.3 | 29.0 | 29.0 | 29.0 | 4 | 12 | 89.5 | 66.5 | 4 | 12 | 28.0 | 26.0 | 4 | 6.5 | 5 | 6 | 46.1 | 64 | 76 | 88 | 5 | 6 | 42.0 | 43.0 | 5 | 12 | 5 | 12 | 12 |
| 2 FT | 13 | 9 | 8 | 8 | 5 | 6.5 | 4 | 7.5 | 48.3 | 29.0 | 29.0 | 29.0 | 5 | 17 | 89.5 | 68.5 | 5 | 17 | 27.0 | 27.0 | 4 | 6.5 | 4 | 6 | 43.9 | 65 | 77 | 89 | 5 | 6.5 | 41.0 | 43.0 | 5 | 12 | 5 | 12 | 12 |
| 4 FT | 9 | 9 | 8 | 8 | 5 | 8.5 | 5 | 6.5 | 44.8 | 25.0 | 25.0 | 25.0 | 5 | 16 | 57.0 | 70.0 | 5 | 16 | 29.0 | 29.0 | 5 | 8.5 | 4 | 6 | 39.6 | 65 | 77 | 89 | 5 | 6 | 40.0 | 43.0 | 5 | 12 | 5 | 12 | 12 |
| 6 FT | 9 | 9 | 8 | 8 | 5 | 8.5 | 5 | 6.5 | 39.6 | 25.0 | 25.0 | 29.0 | 5 | 15 | 46.0 | 52.0 | 5 | 15 | 27.0 | 28.0 | 5 | 7.5 | 5 | 6.5 | 36.5 | 65 | 77 | 89 | 6 | 7 | 42.0 | 45.0 | 5 | 12 | 5 | 12 | 12 |
| 8 FT | 9 | 10 | 8 | 8 | 5 | 8.5 | 5 | 6.5 | 36.8 | 25.0 | 25.0 | 25.0 | 5 | 14 | 42.0 | 45.0 | 5 | 14 | 26.0 | 27.0 | 5 | 7.5 | 4 | 6.5 | 34.8 | 66 | 78 | 90 | 5 | 6 | 38.0 | 42.0 | 5 | 12 | 5 | 12 | 0 |
| 10 FT | 9 | 10 | 8 | 8 | 5 | 8.5 | 5 | 6 | 35.4 | 25.0 | 25.0 | 29.0 | 5 | 12 | 41.0 | 44.0 | 5 | 12 | 26.0 | 26.0 | 5 | 7 | 5 | 7 | 33.5 | 66 | 78 | 90 | 6 | 6.5 | 41.0 | 45.0 | 5 | 12 | 5 | 12 | 0 |
| 12 FT | 10 | 11 | 8 | 8 | 5 | 8 | 5 | 7 | 33.9 | 26.0 | 26.0 | 30.0 | 5 | 12 | 40.0 | 44.0 | 5 | 12 | 26.0 | 26.0 | 5 | 6.5 | 5 | 7.5 | 32.4 | 67 | 79 | 91 | 6 | 7 | 40.0 | 45.0 | 5 | 12 | 5 | 12 | 0 |
| 14 FT | 11 | 12 | 8 | 8 | 5 | 7.5 | 5 | 7.5 | 32.8 | 27.0 | 27.0 | 31.0 | 5 | 13 | 39.0 | 43.0 | 5 | 13 | 25.0 | 26.0 | 5 | 6 | 5 | 8.5 | 31.6 | 68 | 80 | 92 | 6 | 7 | 40.0 | 46.0 | 5 | 12 | 5 | 12 | 0 |
| 16 FT | 12 | 13 | 8 | 8 | 5 | 7 | 5 | 8 | 31.9 | 28.0 | 28.0 | 32.0 | 5 | 13 | 38.0 | 43.0 | 5 | 13 | 25.0 | 27.0 | 5 | 6 | 5 | 8.5 | 31.0 | 69 | 81 | 93 | 6 | 7 | 39.0 | 46.0 | 5 | 12 | 5 | 12 | 0 |
| 18 FT | 13 | 14 | 8 | 8 | 5 | 6.5 | 5 | 8 | 31.3 | 29.0 | 29.0 | 33.0 | 5 | 12 | 37.0 | 43.0 | 5 | 12 | 25.0 | 26.0 | 6 | 8 | 5 | 8.5 | 30.6 | 70 | 82 | 94 | 6 | 7.5 | 39.0 | 46.0 | 5 | 12 | 5 | 12 | 0 |
| 20 FT | 14 | 15 | 8 | 8 | 5 | 6 | 5 | 8.5 | 30.6 | 30.0 | 30.0 | 34.0 | 5 | 12 | 37.0 | 43.0 | 5 | 12 | 24.0 | 26.0 | 6 | 8 | 5 | 8.5 | 30.3 | 71 | 83 | 95 | 6 | 7 | 39.0 | 46.0 | 5 | 12 | 5 | 12 | 0 |
| 22 FT | 15 | 16 | 8 | 8 | 6 | 8 | 5 | 8 | 35.3 | 31.0 | 31.0 | 35.0 | 6 | 16 | 45.0 | 52.0 | 6 | 16 | 32.0 | 34.0 | 6 | 7.5 | 5 | 8 | 30.0 | 72 | 84 | 96 | 6 | 7 | 39.0 | 46.0 | 5 | 12 | 5 | 12 | 0 |
| 24 FT | 15 | 16 | 8 | 8 | 6 | 8 | 5 | 7.5 | 35.0 | 31.0 | 35.0 | 35.0 | 6 | 16 | 45.0 | 52.0 | 6 | 16 | 33.0 | 35.0 | 6 | 6.5 | 5 | 8 | 29.8 | 72 | 84 | 96 | 6 | 6.5 | 39.0 | 46.0 | 5 | 12 | 5 | 11.5 | 0 |
| 26 FT | 16 | 17 | 8 | 8 | 6 | 8 | 5 | 7 | 34.9 | 32.0 | 36.0 | 36.0 | 6 | 15 | 45.0 | 52.0 | 6 | 15 | 32.0 | 34.0 | 6 | 7 | 5 | 7 | 29.8 | 73 | 85 | 97 | 6 | 6.5 | 39.0 | 46.0 | 5 | 12 | 5 | 10.5 | 0 |
| 28 FT | 17 | 18 | 8 | 8 | 6 | 7.5 | 5 | 6.5 | 34.8 | 37.0 | 37.0 | 37.0 | 6 | 14 | 45.0 | 52.0 | 6 | 14 | 32.0 | 34.0 | 6 | 7 | 5 | 6.5 | 29.8 | 74 | 86 | 98 | 6 | 6.5 | 39.0 | 46.0 | 5 | 12 | 5 | 9.5 | 0 |
| 30 FT | 18 | 19 | 8 | 8 | 6 | 7 | 5 | 6.5 | 33.6 | 38.0 | 38.0 | 38.0 | 6 | 13 | 44.0 | 52.0 | 6 | 13 | 31.0 | 32.0 | 6 | 7 | 5 | 6.5 | 28.8 | 75 | 87 | 99 | 6 | 6 | 39.0 | 46.0 | 5 | 12 | 5 | 9.5 | 0 |
| 32 FT | 18 | 20 | 8 | 8 | 6 | 7 | 5 | 6.5 | 33.8 | 38.0 | 38.0 | 38.0 | 6 | 13 | 44.0 | 51.0 | 6 | 13 | 32.0 | 33.0 | 6 | 7 | 5 | 6 | 28.8 | 76 | 88 | 100 | 6 | 6.5 | 39.0 | 46.0 | 5 | 12 | 5 | 9.5 | 0 |
| 34 FT | 19 | 20 | 8 | 8 | 6 | 6.5 | 5 | 6 | 33.6 | 39.0 | 39.0 | 39.0 | 6 | 13 | 44.0 | 51.0 | 6 | 13 | 31.0 | 33.0 | 6 | 6 | 5 | 6 | 28.9 | 76 | 88 | 100 | 6 | 6 | 39.0 | 46.0 | 5 | 12 | 5 | 9.5 | 0 |
| 36 FT | 20 | 21 | 8 | 8 | 6 | 6.5 | 6 | 7.5 | 37.8 | 44.0 | 44.0 | 44.0 | 6 | 12 | 44.0 | 51.0 | 6 | 12 | 30.0 | 32.0 | 6 | 6.5 | 6 | 7.5 | 32.0 | 77 | 89 | 101 | 6 | 6 | 39.0 | 46.0 | 5 | 12 | 5 | 9.5 | 0 |
| 38 FT | 20 | 22 | 8 | 8 | 6 | 6 | 6 | 7.5 | 37.9 | 44.0 | 44.0 | 44.0 | 6 | 12 | 44.0 | 51.0 | 6 | 12 | 31.0 | 32.0 | 6 | 6.5 | 6 | 7 | 32.0 | 78 | 90 | 102 | 6 | 6 | 39.0 | 46.0 | 5 | 12 | 5 | 9 | 0 |
| 40 FT | 21 | 23 | 8 | 8 | 6 | 6 | 6 | 7 | 38.0 | 45.0 | 45.0 | 45.0 | 6 | 12 | 44.0 | 51.0 | 6 | 12 | 30.0 | 32.0 | 6 | 6.5 | 6 | 6.5 | 32.3 | 79 | 91 | 103 | 6 | 6 | 39.0 | 46.0 | 5 | 12 | 5 | 8.5 | 0 |
| 42 FT | 22 | 23 | 8 | 8 | 6 | 6 | 6 | 6.5 | 37.9 | 46.0 | 46.0 | 46.0 | 6 | 12 | 44.0 | 51.0 | 6 | 12 | 30.0 | 31.0 | 6 | 6 | 6 | 6.5 | 32.3 | 79 | 91 | 103 | 7 | 8 | 42.0 | 49.0 | 5 | 12 | 5 | 8 | 0 |
| 44 FT | 23 | 24 | 9 | 8 | 6 | 6 | 6 | 7 | 38.8 | 47.0 | 47.0 | 47.0 | 6 | 12 | 44.0 | 50.0 | 6 | 12 | 30.0 | 31.0 | 6 | 6 | 6 | 7 | 33.0 | 80 | 92 | 104 | 7 | 8 | 42.0 | 50.0 | 5 | 12 | 5 | 8.5 | 0 |
| 46 FT | 23 | 25 | 9 | 8 | 7 | 8 | 6 | 7 | 38.9 | 47.0 | 47.0 | 47.0 | 7 | 16 | 49.0 | 55.0 | 7 | 16 | 35.0 | 36.0 | 6 | 6 | 6 | 7 | 33.0 | 81 | 93 | 105 | 7 | 8 | 42.0 | 50.0 | 5 | 12 | 5 | 8.5 | 0 |
| 48 FT | 24 | 25 | 9 | 8 | 7 | 8 | 6 | 7 | 38.9 | 48.0 | 48.0 | 48.0 | 6 | 12 | 43.0 | 50.0 | 6 | 12 | 30.0 | 31.0 | 6 | 6 | 6 | 7 | 33.1 | 81 | 93 | 105 | 7 | 7.5 | 42.0 | 50.0 | 5 | 12 | 5 | 8 | 0 |
| 50 FT | 24 | 26 | 9 | 8 | 7 | 7.5 | 6 | 6.5 | 39.0 | 48.0 | 48.0 | 48.0 | 7 | 15 | 48.0 | 55.0 | 7 | 15 | 35.0 | 36.0 | 6 | 6 | 6 | 6.5 | 33.3 | 82 | 94 | 106 | 7 | 7.5 | 42.0 | 50.0 | 5 | 12 | 5 | 7.5 | 0 |

## SPAN (S) = 9 FT  HEIGHT (HT) = 8 FT OR 9 FT OR 10 FT

| DESIGN FILL | MEMBER THICKNESS | | | | TOP SLAB BARS | | | | | | | | | | | | | | BOTTOM SLAB BARS | | | | | | | | | | | | WALL BARS | | | | |
|---|---|---|---|---|---|---|---|---|---|---|---|---|---|---|---|---|---|---|---|---|---|---|---|---|---|---|---|---|---|---|---|---|---|---|---|
| | | | | | A1 BARS | | J3 BARS | | | | | | H1 BARS | | | | H2 BARS | | | | A2 BARS | | J4 BARS | | | | | | H3 BARS | | | | B1 BARS | | B2 BARS | |
| | | | | | | | | | | K2 | | | | | | | | | | | | | | | K3 | | | | | | | | | |
| | TS | BS | TX | TI | SIZE | SPA. | SIZE | SPA. | C1 | HT=8′ | HT=9′ | HT=10′ | SIZE | SPA. | C5 | Q8 | SIZE | SPA. | C6 | Q9 | SIZE | SPA. | SIZE | SPA. | C4 | HT=8′ | HT=9′ | HT=10′ | SIZE | SPA. | C7 | Q10 | SIZE | SPA. | SIZE | SPA. | G1 |
| 1 FT | 13 | 9 | 8 | 8 | 5 | 6.5 | 5 | 8.5 | 48.3 | 29.0 | 29.0 | 33.0 | 4 | 12 | 89.5 | 66.5 | 4 | 12 | 29.0 | 27.0 | 4 | 6.5 | 6 | 6.5 | 75.0 | 101 | 113 | 125 | 5 | 7 | 43.0 | 44.0 | 5 | 12 | 5 | 12 | 12 |
| 2 FT | 13 | 9 | 8 | 8 | 5 | 6.5 | 5 | 8.5 | 51.3 | 29.0 | 33.0 | 33.0 | 5 | 18 | 91.5 | 68.5 | 5 | 18 | 28.0 | 25.0 | 5 | 9 | 6 | 6.5 | 69.0 | 101 | 113 | 125 | 5 | 6.5 | 42.0 | 44.0 | 5 | 12 | 5 | 11.5 | 12 |
| 4 FT | 9 | 9 | 8 | 8 | 5 | 8.5 | 6 | 7 | 51.3 | 29.0 | 33.0 | 33.0 | 5 | 16 | 91.5 | 70.0 | 5 | 16 | 29.0 | 30.0 | 5 | 8 | 6 | 6 | 62.0 | 101 | 113 | 125 | 5 | 6 | 41.0 | 44.0 | 5 | 12 | 5 | 10 | 12 |
| 6 FT | 9 | 10 | 9 | 8 | 5 | 8.5 | 5 | 6 | 54.9 | 25.0 | 25.0 | 29.0 | 5 | 15 | 49.0 | 53.0 | 5 | 15 | 27.0 | 28.0 | 5 | 8 | 5 | 6 | 53.9 | 102 | 114 | 126 | 5 | 6.5 | 39.0 | 43.0 | 5 | 12 | 5 | 11 | 12 |
| 8 FT | 9 | 10 | 9 | 8 | 5 | 8.5 | 5 | 6 | 48.8 | 25.0 | 29.0 | 29.0 | 5 | 14 | 44.0 | 46.0 | 5 | 14 | 26.0 | 27.0 | 5 | 7 | 6 | 6.5 | 52.4 | 102 | 114 | 126 | 6 | 7 | 41.0 | 46.0 | 5 | 12 | 5 | 10.5 | 0 |
| 10 FT | 9 | 11 | 9 | 8 | 5 | 8.5 | 5 | 6 | 46.5 | 25.0 | 29.0 | 29.0 | 5 | 12 | 42.0 | 44.0 | 5 | 12 | 26.0 | 26.0 | 5 | 6.5 | 6 | 7 | 51.4 | 103 | 115 | 127 | 5 | 6 | 38.0 | 43.0 | 5 | 12 | 5 | 9.5 | 0 |
| 12 FT | 10 | 11 | 9 | 8 | 5 | 8 | 5 | 6 | 45.8 | 30.0 | 30.0 | 30.0 | 5 | 13 | 40.0 | 43.0 | 5 | 13 | 26.0 | 27.0 | 5 | 6.5 | 6 | 6 | 49.5 | 103 | 115 | 127 | 6 | 7 | 40.0 | 45.0 | 5 | 12 | 5 | 9 | 0 |
| 14 FT | 11 | 12 | 9 | 8 | 5 | 7.5 | 6 | 7 | 48.1 | 31.0 | 31.0 | 35.0 | 5 | 13 | 39.0 | 43.0 | 5 | 13 | 25.0 | 27.0 | 5 | 6 | 6 | 6.5 | 48.8 | 104 | 116 | 128 | 6 | 7 | 40.0 | 46.0 | 5 | 12 | 5 | 8.5 | 0 |
| 16 FT | 12 | 13 | 9 | 8 | 5 | 7 | 6 | 6.5 | 47.4 | 32.0 | 32.0 | 36.0 | 5 | 13 | 39.0 | 43.0 | 5 | 13 | 25.0 | 27.0 | 5 | 6 | 6 | 6.5 | 48.3 | 105 | 117 | 129 | 6 | 7 | 40.0 | 46.0 | 5 | 12 | 5 | 8.5 | 0 |
| 18 FT | 13 | 14 | 9 | 8 | 5 | 6.5 | 6 | 7 | 46.9 | 33.0 | 33.0 | 37.0 | 5 | 12 | 38.0 | 43.0 | 5 | 12 | 24.0 | 26.0 | 6 | 8 | 6 | 6.5 | 47.6 | 106 | 118 | 130 | 6 | 7.5 | 40.0 | 46.0 | 5 | 12 | 5 | 8.5 | 0 |
| 20 FT | 13 | 15 | 9 | 8 | 5 | 6.5 | 6 | 6 | 46.0 | 33.0 | 33.0 | 37.0 | 5 | 12 | 38.0 | 43.0 | 5 | 12 | 25.0 | 27.0 | 6 | 8 | 6 | 6.5 | 47.1 | 107 | 119 | 131 | 6 | 7 | 40.0 | 46.0 | 5 | 12 | 5 | 8.5 | 0 |
| 22 FT | 14 | 16 | 11 | 8 | 5 | 6 | 5 | 6 | 43.5 | 34.0 | 34.0 | 34.0 | 5 | 12 | 37.0 | 42.0 | 5 | 12 | 25.0 | 26.0 | 6 | 7.5 | 5 | 7 | 44.0 | 108 | 120 | 132 | 6 | 7 | 40.0 | 46.0 | 5 | 12 | 5 | 8 | 0 |
| 24 FT | 15 | 17 | 11 | 8 | 6 | 8 | 5 | 6 | 48.4 | 35.0 | 35.0 | 35.0 | 6 | 16 | 46.0 | 51.0 | 6 | 16 | 33.0 | 35.0 | 6 | 7.5 | 5 | 7 | 44.0 | 109 | 121 | 133 | 6 | 6.5 | 40.0 | 46.0 | 5 | 12 | 5 | 7.5 | 0 |
| 26 FT | 16 | 17 | 11 | 8 | 6 | 8 | 6 | 8 | 52.1 | 36.0 | 36.0 | 36.0 | 6 | 15 | 45.0 | 51.0 | 6 | 15 | 32.0 | 34.0 | 6 | 6.5 | 5 | 6 | 43.6 | 109 | 121 | 133 | 6 | 6.5 | 40.0 | 46.0 | 5 | 12 | 5 | 7.5 | 0 |
| 28 FT | 17 | 18 | 12 | 8 | 6 | 7.5 | 5 | 6 | 48.8 | 37.0 | 37.0 | 37.0 | 6 | 14 | 45.0 | 51.0 | 6 | 14 | 31.0 | 33.0 | 6 | 7 | 5 | 6.5 | 43.9 | 110 | 122 | 134 | 6 | 6.5 | 40.0 | 46.0 | 5 | 12 | 5 | 7 | 0 |
| 30 FT | 17 | 19 | 12 | 8 | 6 | 7.5 | 5 | 6 | 46.9 | 37.0 | 37.0 | 37.0 | 6 | 14 | 44.0 | 51.0 | 6 | 14 | 32.0 | 33.0 | 6 | 7 | 5 | 6.5 | 42.0 | 111 | 123 | 135 | 6 | 6 | 40.0 | 47.0 | 5 | 12 | 5 | 7.5 | 0 |
| 32 FT | 18 | 20 | 12 | 8 | 6 | 7 | 6 | 8 | 51.0 | 38.0 | 38.0 | 38.0 | 6 | 13 | 44.0 | 50.0 | 6 | 13 | 31.0 | 33.0 | 6 | 7 | 5 | 6.5 | 42.3 | 112 | 124 | 136 | 6 | 6 | 40.0 | 47.0 | 5 | 12 | 5 | 7 | 0 |
| 34 FT | 19 | 20 | 12 | 8 | 6 | 7 | 6 | 8 | 50.9 | 39.0 | 39.0 | 39.0 | 6 | 13 | 44.0 | 50.0 | 6 | 13 | 30.0 | 32.0 | 6 | 6 | 5 | 6.5 | 42.3 | 112 | 124 | 136 | 6 | 6 | 40.0 | 47.0 | 5 | 12 | 5 | 7 | 0 |
| 36 FT | 19 | 21 | 13 | 8 | 6 | 6.5 | 6 | 8 | 51.6 | 39.0 | 39.0 | 39.0 | 6 | 13 | 44.0 | 50.0 | 6 | 13 | 31.0 | 32.0 | 6 | 6.5 | 5 | 6 | 42.5 | 113 | 125 | 137 | 6 | 6 | 40.0 | 47.0 | 5 | 12 | 5 | 7 | 0 |
| 38 FT | 20 | 22 | 13 | 8 | 6 | 6.5 | 6 | 7.5 | 51.8 | 40.0 | 40.0 | 40.0 | 6 | 12 | 44.0 | 50.0 | 6 | 12 | 30.0 | 31.0 | 6 | 6.5 | 5 | 6 | 42.8 | 114 | 126 | 138 | 6 | 6 | 40.0 | 47.0 | 5 | 12 | 5 | 6.5 | 0 |
| 40 FT | 21 | 23 | 13 | 8 | 6 | 6.5 | 6 | 7.5 | 51.9 | 41.0 | 41.0 | 41.0 | 6 | 12 | 44.0 | 49.0 | 6 | 12 | 30.0 | 31.0 | 6 | 6.5 | 5 | 6 | 43.0 | 115 | 127 | 139 | 6 | 6 | 40.0 | 47.0 | 5 | 12 | 5 | 6.5 | 0 |
| 42 FT | 21 | 24 | 14 | 8 | 6 | 6 | 6 | 7.5 | 52.6 | 41.0 | 41.0 | 41.0 | 6 | 12 | 44.0 | 49.0 | 6 | 12 | 30.0 | 31.0 | 6 | 6.5 | 5 | 6 | 43.4 | 116 | 128 | 140 | 6 | 6 | 40.0 | 47.0 | 5 | 12 | 5 | 6.5 | 0 |
| 44 FT | 22 | 24 | 14 | 8 | 6 | 6 | 6 | 7.5 | 52.6 | 42.0 | 42.0 | 42.0 | 6 | 12 | 44.0 | 49.0 | 6 | 12 | 30.0 | 31.0 | 6 | 6 | 5 | 6 | 43.4 | 116 | 128 | 140 | 7 | 7.5 | 43.0 | 50.0 | 5 | 12 | 5 | 6 | 0 |
| 46 FT | 23 | 25 | 14 | 8 | 6 | 6 | 6 | 7 | 52.8 | 43.0 | 43.0 | 43.0 | 6 | 12 | 43.0 | 48.0 | 6 | 12 | 30.0 | 31.0 | 6 | 6 | 5 | 6 | 43.6 | 117 | 129 | 141 | 7 | 7.5 | 43.0 | 50.0 | 5 | 12 | 5 | 6 | 0 |
| 48 FT | 23 | 26 | 15 | 8 | 6 | 6 | 6 | 7 | 53.6 | 43.0 | 43.0 | 47.0 | 6 | 12 | 44.0 | 48.0 | 6 | 12 | 30.0 | 31.0 | 6 | 6 | 6 | 8 | 47.0 | 118 | 130 | 142 | 7 | 7.5 | 43.0 | 50.0 | 5 | 12 | 5 | 6 | 0 |
| 50 FT | 24 | 26 | 15 | 8 | 6 | 6 | 6 | 7 | 53.6 | 44.0 | 44.0 | 48.0 | 6 | 12 | 43.0 | 48.0 | 6 | 12 | 30.0 | 30.0 | 6 | 6 | 6 | 8 | 47.1 | 118 | 130 | 142 | 7 | 7.5 | 43.0 | 50.0 | 5 | 12 | 6 | 8 | 0 |

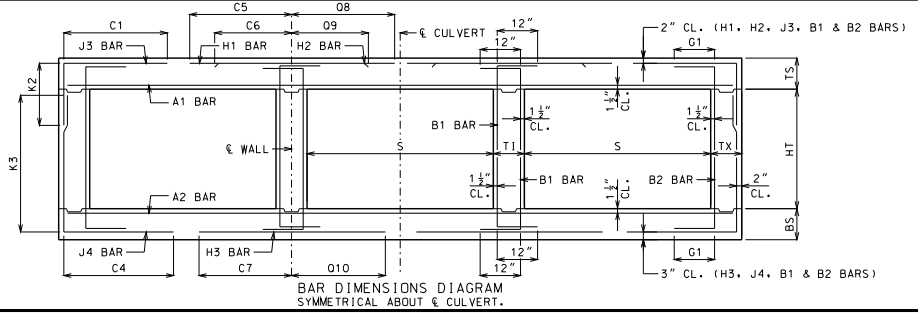


BAR DIMENSIONS DIAGRAM
SYMMETRICAL ABOUT ℄ CULVERT.

GENERAL NOTES:

IF DESIGN FILL IS BETWEEN TABULATED DESIGN FILLS, USE THE NEXT GREATER TABULATED DESIGN FILL, EXCEPT FOR DESIGN FILLS BETWEEN 2 FEET AND 4 FEET. FOR DESIGN FILLS BETWEEN 2 FEET AND 4 FEET USE THE GREATER MEMBER THICKNESS, AREA OF REINFORCEMENT AND BAR DIMENSIONS FROM THE 2 FEET AND 4 FEET TABULATED DESIGN FILLS. AREA OF REINFORCEMENT EQUALS BAR AREA PER FOOT SPACING.

SPECIAL DESIGNS ARE REQUIRED WHEN THE DESIGN FILL IS LESS THAN 1 FOOT OR GREATER THAN 50 FEET.

DIMENSIONS ARE IN INCHES UNLESS OTHERWISE SPECIFIED.

DESIGN FILLS ARE MEASURED FROM THE TOP OF TOP SLAB TO THE TOP OF EARTH FILL OR ROADWAY.

CULVERTS MEET STRENGTH AND SERVICEABILITY REQUIREMENTS FOR THE DESIGN VEHICULAR LIVE LOAD HL-93 MINUS THE LANE LOAD.


MISSOURI HIGHWAYS AND TRANSPORTATION COMMISSION
105 WEST CAPITOL
JEFFERSON CITY, MO 65102
1-888-ASK-MODOT (1-888-275-6636)


STATE OF MISSOURI — DENNIS W. HECKMAN — NUMBER PE-27141 — PROFESSIONAL ENGINEER
THIS SHEET HAS BEEN SIGNED, SEALED AND DATED ELECTRONICALLY.

# CONCRETE TRIPLE BOX CULVERT

MEMBER THICKNESS
BAR SIZE, SPACING & DIMENSIONS

SPAN (S): 9 FEET
HEIGHT (HT): 5 THRU 10 FEET

DATE EFFECTIVE: 12/01/2011
DATE PREPARED: 9/29/2011

703.87

SHEET NO.
12 OF 27

IF A SEAL IS PRESENT ON THIS SHEET IT HAS BEEN ELECTRONICALLY SEALED AND DATED.

SPAN (S) = 9 FT  HEIGHT (HT) = 11 FT OR 12 FT

| DESIGN FILL | MEMBER THICKNESS | | | | TOP SLAB BARS | | | | | | | | | | | | | | BOTTOM SLAB BARS | | | | | | | | | | WALL BARS | | | | |
|---|---|---|---|---|---|---|---|---|---|---|---|---|---|---|---|---|---|---|---|---|---|---|---|---|---|---|---|---|---|---|---|---|---|
| | | | | | A1 BARS | | J3 BARS | | | | | H1 BARS | | | | H2 BARS | | | | A2 BARS | | J4 BARS | | | | H3 BARS | | | | B1 BARS | | B2 BARS | |
| | TS | BS | TX | TI | SIZE | SPA. | SIZE | SPA. | C1 | K2 HT=11' | K2 HT=12' | SIZE | SPA. | C5 | O8 | SIZE | SPA. | C6 | O9 | SIZE | SPA. | SIZE | SPA. | C4 | K3 HT=11' | K3 HT=12' | SIZE | SPA. | C7 | O10 | SIZE | SPA. | SIZE | SPA. | G1 |
| 1 FT | 13 | 9 | 9 | 10 | 5 | 6.5 | 5 | 7.5 | 49.3 | 33.0 | 33.0 | 4 | 12 | 90.5 | 67.5 | 4 | 12 | 29.0 | 27.0 | 4 | 6 | 6 | 6 | 76.3 | 137 | 149 | 5 | 6.5 | 44.0 | 44.0 | 5 | 10 | 5 | 9 | 12 |
| 2 FT | 13 | 10 | 9 | 10 | 5 | 6.5 | 5 | 7 | 52.3 | 33.0 | 33.0 | 5 | 18 | 92.5 | 69.5 | 5 | 18 | 28.0 | 25.0 | 4 | 6 | 6 | 6.5 | 76.3 | 138 | 150 | 5 | 7 | 44.0 | 45.0 | 5 | 11.5 | 5 | 9 | 12 |
| 4 FT | 9 | 10 | 9 | 10 | 5 | 8.5 | 5 | 6 | 52.3 | 29.0 | 29.0 | 5 | 16 | 92.5 | 71.0 | 5 | 16 | 29.0 | 30.0 | 5 | 8.5 | 6 | 6 | 76.3 | 138 | 150 | 5 | 7 | 43.0 | 45.0 | 5 | 11.5 | 5 | 8.5 | 12 |
| 6 FT | 9 | 10 | 10 | 10 | 5 | 8.5 | 5 | 6 | 69.4 | 29.0 | 29.0 | 5 | 16 | 51.0 | 49.0 | 5 | 16 | 28.0 | 28.0 | 5 | 7.5 | 6 | 6.5 | 68.8 | 138 | 150 | 5 | 6 | 41.0 | 43.0 | 5 | 12 | 5 | 8 | 12 |
| 8 FT | 9 | 10 | 10 | 10 | 5 | 8.5 | 5 | 6 | 60.0 | 29.0 | 29.0 | 5 | 14 | 45.0 | 45.0 | 5 | 14 | 27.0 | 27.0 | 5 | 7 | 6 | 6 | 63.9 | 138 | 150 | 6 | 7 | 43.0 | 45.0 | 5 | 12 | 5 | 8 | 0 |
| 10 FT | 9 | 11 | 10 | 10 | 5 | 8.5 | 6 | 7 | 59.0 | 29.0 | 33.0 | 5 | 13 | 42.0 | 43.0 | 5 | 13 | 27.0 | 27.0 | 5 | 6.5 | 6 | 6 | 63.6 | 139 | 151 | 5 | 6 | 39.0 | 43.0 | 5 | 12 | 5 | 8 | 0 |
| 12 FT | 10 | 12 | 10 | 10 | 5 | 8 | 6 | 7 | 58.6 | 30.0 | 34.0 | 5 | 13 | 41.0 | 43.0 | 5 | 13 | 26.0 | 27.0 | 5 | 6.5 | 6 | 6.5 | 62.8 | 140 | 152 | 5 | 6 | 39.0 | 43.0 | 5 | 12 | 5 | 8 | 0 |
| 14 FT | 11 | 12 | 10 | 10 | 5 | 7.5 | 6 | 7.5 | 58.5 | 31.0 | 35.0 | 5 | 13 | 41.0 | 43.0 | 5 | 13 | 26.0 | 27.0 | 5 | 6 | 6 | 6 | 60.4 | 140 | 152 | 6 | 7 | 41.0 | 45.0 | 5 | 12 | 5 | 8 | 0 |
| 16 FT | 12 | 13 | 11 | 10 | 5 | 7 | 5 | 6 | 54.4 | 32.0 | 32.0 | 5 | 13 | 40.0 | 42.0 | 5 | 13 | 26.0 | 27.0 | 5 | 6 | 6 | 7 | 59.1 | 141 | 153 | 6 | 7 | 41.0 | 45.0 | 5 | 12 | 5 | 7.5 | 0 |
| 18 FT | 12 | 14 | 11 | 10 | 5 | 7 | 6 | 7.5 | 55.6 | 32.0 | 36.0 | 5 | 12 | 39.0 | 42.0 | 5 | 12 | 26.0 | 27.0 | 6 | 8 | 6 | 6.5 | 59.0 | 142 | 154 | 6 | 7.5 | 41.0 | 46.0 | 5 | 12 | 5 | 7.5 | 0 |
| 20 FT | 13 | 15 | 12 | 10 | 5 | 6.5 | 6 | 8 | 55.0 | 33.0 | 37.0 | 5 | 12 | 38.0 | 42.0 | 5 | 12 | 26.0 | 27.0 | 6 | 8 | 6 | 7 | 58.1 | 143 | 155 | 6 | 7 | 41.0 | 46.0 | 5 | 12 | 5 | 7 | 0 |
| 22 FT | 14 | 16 | 12 | 10 | 5 | 6 | 6 | 7.5 | 55.0 | 34.0 | 38.0 | 5 | 12 | 38.0 | 42.0 | 5 | 12 | 25.0 | 27.0 | 6 | 7.5 | 6 | 7 | 57.9 | 144 | 156 | 6 | 7 | 41.0 | 46.0 | 5 | 12 | 5 | 7 | 0 |
| 24 FT | 15 | 17 | 13 | 10 | 6 | 8 | 6 | 7.5 | 61.0 | 35.0 | 39.0 | 6 | 16 | 47.0 | 51.0 | 6 | 16 | 33.0 | 35.0 | 6 | 7.5 | 6 | 7.5 | 57.4 | 145 | 157 | 6 | 6.5 | 41.0 | 46.0 | 5 | 12 | 5 | 6.5 | 0 |
| 26 FT | 16 | 17 | 13 | 10 | 6 | 8 | 6 | 7 | 61.3 | 40.0 | 40.0 | 6 | 15 | 46.0 | 51.0 | 6 | 15 | 33.0 | 34.0 | 6 | 6.5 | 6 | 7 | 56.6 | 145 | 157 | 6 | 6.5 | 41.0 | 46.0 | 5 | 12 | 5 | 6.5 | 0 |
| 28 FT | 16 | 18 | 14 | 10 | 6 | 8 | 6 | 7.5 | 61.0 | 36.0 | 40.0 | 6 | 15 | 46.0 | 51.0 | 6 | 15 | 33.0 | 35.0 | 6 | 7 | 6 | 7 | 56.6 | 146 | 158 | 6 | 6.5 | 41.0 | 46.0 | 5 | 12 | 5 | 6 | 0 |
| 30 FT | 17 | 19 | 14 | 10 | 6 | 7.5 | 6 | 7.5 | 59.6 | 37.0 | 41.0 | 6 | 14 | 45.0 | 50.0 | 6 | 14 | 32.0 | 34.0 | 6 | 7 | 6 | 7.5 | 54.8 | 147 | 159 | 6 | 6 | 41.0 | 46.0 | 5 | 12 | 5 | 6 | 0 |
| 32 FT | 18 | 20 | 14 | 10 | 6 | 7 | 6 | 7 | 59.9 | 38.0 | 42.0 | 6 | 13 | 45.0 | 50.0 | 6 | 13 | 32.0 | 33.0 | 6 | 7 | 6 | 7.5 | 55.0 | 148 | 160 | 6 | 6 | 41.0 | 46.0 | 5 | 12 | 5 | 6 | 0 |
| 34 FT | 18 | 20 | 14 | 10 | 6 | 6.5 | 6 | 6.5 | 59.8 | 38.0 | 42.0 | 6 | 13 | 45.0 | 50.0 | 6 | 13 | 32.0 | 34.0 | 6 | 6 | 6 | 7.5 | 54.9 | 148 | 160 | 6 | 6 | 41.0 | 46.0 | 5 | 12 | 5 | 6 | 0 |
| 36 FT | 19 | 21 | 15 | 10 | 6 | 6.5 | 6 | 7 | 60.3 | 43.0 | 43.0 | 6 | 13 | 45.0 | 50.0 | 6 | 13 | 31.0 | 33.0 | 6 | 6.5 | 6 | 7.5 | 55.3 | 149 | 161 | 6 | 6 | 41.0 | 47.0 | 5 | 12 | 6 | 8 | 0 |
| 38 FT | 20 | 22 | 15 | 10 | 6 | 6.5 | 6 | 6.5 | 60.6 | 44.0 | 44.0 | 6 | 12 | 45.0 | 50.0 | 6 | 12 | 31.0 | 32.0 | 6 | 6.5 | 6 | 7.5 | 55.5 | 150 | 162 | 6 | 6 | 41.0 | 47.0 | 5 | 12 | 6 | 8 | 0 |
| 40 FT | 20 | 23 | 16 | 10 | 6 | 6.5 | 6 | 6.5 | 60.9 | 44.0 | 44.0 | 6 | 12 | 45.0 | 49.0 | 6 | 12 | 31.0 | 32.0 | 6 | 6.5 | 6 | 7.5 | 55.9 | 151 | 163 | 6 | 6 | 41.0 | 47.0 | 5 | 12 | 6 | 8 | 0 |
| 42 FT | 21 | 23 | 16 | 10 | 6 | 6.5 | 6 | 6.5 | 61.1 | 45.0 | 45.0 | 6 | 12 | 45.0 | 49.0 | 6 | 12 | 31.0 | 32.0 | 6 | 6 | 6 | 7.5 | 55.8 | 151 | 163 | 7 | 7.5 | 44.0 | 50.0 | 5 | 12 | 6 | 8 | 0 |
| 44 FT | 22 | 24 | 17 | 10 | 6 | 6 | 6 | 6.5 | 61.9 | 46.0 | 46.0 | 6 | 12 | 45.0 | 49.0 | 6 | 12 | 31.0 | 32.0 | 6 | 6 | 6 | 7 | 56.3 | 152 | 164 | 7 | 7.5 | 44.0 | 50.0 | 5 | 12 | 6 | 7.5 | 0 |
| 46 FT | 22 | 25 | 17 | 10 | 6 | 6 | 6 | 6 | 61.9 | 46.0 | 46.0 | 6 | 12 | 45.0 | 48.0 | 6 | 12 | 31.0 | 32.0 | 6 | 6 | 6 | 7 | 56.5 | 153 | 165 | 7 | 8 | 44.0 | 50.0 | 5 | 12 | 6 | 7.5 | 0 |
| 48 FT | 23 | 26 | 18 | 10 | 6 | 6 | 6 | 6.5 | 62.5 | 47.0 | 47.0 | 6 | 12 | 44.0 | 48.0 | 6 | 12 | 31.0 | 31.0 | 6 | 6 | 6 | 6.5 | 57.0 | 154 | 166 | 7 | 8 | 44.0 | 50.0 | 5 | 12 | 6 | 7 | 0 |
| 50 FT | 23 | 26 | 18 | 10 | 7 | 8 | 6 | 6 | 62.5 | 47.0 | 47.0 | 6 | 12 | 44.0 | 48.0 | 6 | 12 | 31.0 | 31.0 | 6 | 6 | 6 | 6.5 | 56.9 | 154 | 166 | 7 | 7.5 | 44.0 | 50.0 | 5 | 12 | 6 | 7 | 0 |

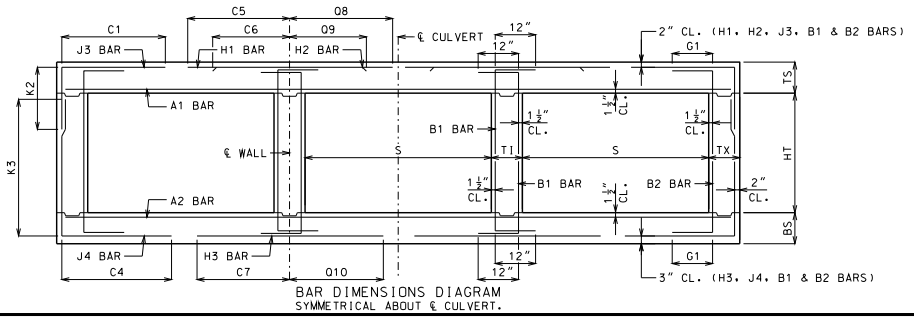


BAR DIMENSIONS DIAGRAM
SYMMETRICAL ABOUT ℄ CULVERT.

GENERAL NOTES:

IF DESIGN FILL IS BETWEEN TABULATED DESIGN FILLS, USE THE NEXT GREATER TABULATED DESIGN FILL, EXCEPT FOR DESIGN FILLS BETWEEN 2 FEET AND 4 FEET. FOR DESIGN FILLS BETWEEN 2 FEET AND 4 FEET USE THE GREATER MEMBER THICKNESS, AREA OF REINFORCEMENT AND BAR DIMENSIONS FROM THE 2 FEET AND 4 FEET TABULATED DESIGN FILLS. AREA OF REINFORCEMENT EQUALS BAR AREA PER FOOT SPACING.

SPECIAL DESIGNS ARE REQUIRED WHEN THE DESIGN FILL IS LESS THAN 1 FOOT OR GREATER THAN 50 FEET.

DIMENSIONS ARE IN INCHES UNLESS OTHERWISE SPECIFIED.

DESIGN FILLS ARE MEASURED FROM THE TOP OF TOP SLAB TO THE TOP OF EARTH FILL OR ROADWAY.

CULVERTS MEET STRENGTH AND SERVICEABILITY REQUIREMENTS FOR THE DESIGN VEHICULAR LIVE LOAD HL-93 MINUS THE LANE LOAD.


MISSOURI HIGHWAYS AND TRANSPORTATION COMMISSION
105 WEST CAPITOL
JEFFERSON CITY, MO 65102
1-888-ASK-MODOT (1-888-275-6636)


STATE OF MISSOURI
DENNIS W. HECKMAN
NUMBER PE-27141
PROFESSIONAL ENGINEER
THIS SHEET HAS BEEN SIGNED, SEALED AND DATED ELECTRONICALLY.

# CONCRETE TRIPLE BOX CULVERT

MEMBER THICKNESS
BAR SIZE, SPACING & DIMENSIONS

SPAN (S): 9 FEET
HEIGHT (HT): 11 THRU 12 FEET

DATE EFFECTIVE: 12/01/2011
DATE PREPARED: 9/29/2011

703.87

SHEET NO.
13 OF 27

IF A SEAL IS PRESENT ON THIS SHEET IT HAS BEEN ELECTRONICALLY SEALED AND DATED.

## SPAN (S) = 10 FT  HEIGHT (HT) = 5 FT OR 6 FT OR 7 FT

| DESIGN FILL | MEMBER THICKNESS | | | | TOP SLAB BARS | | | | | | | | | | | | | | BOTTOM SLAB BARS | | | | | | | | | | | | WALL BARS | | | | |
|---|---|---|---|---|---|---|---|---|---|---|---|---|---|---|---|---|---|---|---|---|---|---|---|---|---|---|---|---|---|---|---|---|---|---|---|
| | | | | | A1 BARS | | J3 BARS | | | | | | H1 BARS | | | | H2 BARS | | | | A2 BARS | | J4 BARS | | | | | | H3 BARS | | | | B1 BARS | | B2 BARS | |
| | | | | | | | | | | K2 | | | | | | | | | | | | | | K3 | | | | | | | | | | | |
| | TS | BS | TX | TI | SIZE | SPA. | SIZE | SPA. | C1 | HT=5′ | HT=6′ | HT=7′ | SIZE | SPA. | C5 | Q8 | SIZE | SPA. | C6 | Q9 | SIZE | SPA. | SIZE | SPA. | C4 | HT=5′ | HT=6′ | HT=7′ | SIZE | SPA. | C7 | Q10 | SIZE | SPA. | SIZE | SPA. | G1 |
| 1 FT | 13 | 9 | 8 | 8 | 5 | 6.5 | 4 | 7 | 51.9 | 29.0 | 29.0 | 29.0 | 5 | 16 | 98.5 | 74.5 | 5 | 16 | 29.0 | 27.0 | 4 | 6 | 4 | 6 | 47.4 | 65 | 77 | 89 | 5 | 6.5 | 45.0 | 47.0 | 5 | 12 | 5 | 12 | 12 |
| 2 FT | 13 | 9 | 8 | 8 | 5 | 6.5 | 4 | 6.5 | 51.9 | 29.0 | 29.0 | 29.0 | 5 | 14 | 98.5 | 74.5 | 5 | 14 | 28.0 | 29.0 | 5 | 8.5 | 5 | 6.5 | 43.3 | 65 | 77 | 89 | 5 | 6 | 44.0 | 46.0 | 5 | 12 | 5 | 12 | 12 |
| 4 FT | 9 | 9 | 8 | 8 | 5 | 7.5 | 6 | 7.5 | 48.4 | 25.0 | 29.0 | 29.0 | 5 | 13 | 59.0 | 76.0 | 5 | 13 | 30.0 | 30.0 | 5 | 7.5 | 5 | 6.5 | 39.0 | 65 | 77 | 89 | 6 | 6.5 | 46.0 | 49.0 | 5 | 10 | 5 | 12 | 12 |
| 6 FT | 9 | 9 | 8 | 8 | 5 | 8 | 5 | 6 | 39.8 | 29.0 | 29.0 | 29.0 | 5 | 13 | 49.0 | 55.0 | 5 | 13 | 28.0 | 29.0 | 5 | 7.5 | 6 | 7 | 39.8 | 65 | 77 | 89 | 6 | 6 | 45.0 | 48.0 | 5 | 12 | 5 | 12 | 12 |
| 8 FT | 10 | 10 | 8 | 8 | 5 | 8 | 5 | 7.5 | 36.8 | 26.0 | 26.0 | 30.0 | 5 | 13 | 45.0 | 50.0 | 5 | 13 | 28.0 | 28.0 | 5 | 7 | 5 | 6.5 | 34.8 | 66 | 78 | 90 | 6 | 6.5 | 44.0 | 48.0 | 5 | 12 | 5 | 12 | 0 |
| 10 FT | 10 | 11 | 8 | 8 | 5 | 8 | 5 | 6.5 | 35.4 | 26.0 | 26.0 | 30.0 | 6 | 15 | 47.0 | 51.0 | 6 | 15 | 30.0 | 31.0 | 5 | 6.5 | 5 | 7.5 | 32.9 | 67 | 79 | 91 | 6 | 6.5 | 43.0 | 49.0 | 5 | 12 | 5 | 12 | 0 |
| 12 FT | 11 | 12 | 8 | 8 | 5 | 7.5 | 5 | 7 | 33.6 | 27.0 | 27.0 | 31.0 | 6 | 16 | 45.0 | 50.0 | 6 | 16 | 30.0 | 31.0 | 5 | 6 | 5 | 8.5 | 31.6 | 68 | 80 | 92 | 6 | 6.5 | 42.0 | 49.0 | 5 | 12 | 5 | 12 | 0 |
| 14 FT | 12 | 13 | 8 | 8 | 5 | 7 | 5 | 8 | 32.4 | 28.0 | 28.0 | 32.0 | 6 | 16 | 44.0 | 50.0 | 6 | 16 | 29.0 | 31.0 | 5 | 6 | 5 | 8.5 | 30.9 | 69 | 81 | 93 | 6 | 6.5 | 42.0 | 49.0 | 5 | 12 | 5 | 12 | 0 |
| 16 FT | 13 | 14 | 8 | 8 | 5 | 6.5 | 5 | 8 | 31.3 | 29.0 | 29.0 | 33.0 | 6 | 16 | 44.0 | 50.0 | 6 | 16 | 29.0 | 31.0 | 6 | 8 | 5 | 8.5 | 30.3 | 70 | 82 | 94 | 6 | 7 | 42.0 | 49.0 | 5 | 12 | 5 | 12 | 0 |
| 18 FT | 14 | 15 | 8 | 8 | 5 | 6 | 5 | 8.5 | 30.5 | 30.0 | 30.0 | 34.0 | 6 | 16 | 43.0 | 50.0 | 6 | 16 | 29.0 | 31.0 | 6 | 7.5 | 5 | 8.5 | 29.8 | 71 | 83 | 95 | 6 | 7 | 41.0 | 49.0 | 5 | 12 | 5 | 12 | 0 |
| 20 FT | 15 | 16 | 8 | 8 | 6 | 8 | 5 | 8 | 34.9 | 31.0 | 31.0 | 35.0 | 6 | 16 | 48.0 | 56.0 | 6 | 16 | 35.0 | 37.0 | 6 | 7 | 5 | 8 | 29.4 | 72 | 84 | 96 | 6 | 7 | 41.0 | 49.0 | 5 | 12 | 5 | 12 | 0 |
| 22 FT | 16 | 17 | 8 | 8 | 6 | 8 | 5 | 7 | 34.4 | 32.0 | 32.0 | 36.0 | 6 | 15 | 48.0 | 56.0 | 6 | 15 | 34.0 | 37.0 | 6 | 7 | 5 | 7 | 29.0 | 73 | 85 | 97 | 6 | 6.5 | 41.0 | 50.0 | 5 | 12 | 5 | 12 | 0 |
| 24 FT | 17 | 18 | 8 | 8 | 6 | 7.5 | 5 | 6.5 | 34.0 | 37.0 | 37.0 | 37.0 | 6 | 14 | 48.0 | 56.0 | 6 | 14 | 34.0 | 36.0 | 6 | 6.5 | 5 | 6.5 | 28.9 | 74 | 86 | 98 | 6 | 6.5 | 41.0 | 50.0 | 5 | 12 | 5 | 11 | 0 |
| 26 FT | 18 | 19 | 8 | 8 | 6 | 7 | 5 | 6.5 | 33.9 | 38.0 | 38.0 | 38.0 | 6 | 13 | 47.0 | 55.0 | 6 | 13 | 33.0 | 35.0 | 6 | 6.5 | 5 | 6.5 | 28.8 | 75 | 87 | 99 | 6 | 6 | 41.0 | 50.0 | 5 | 12 | 5 | 10 | 0 |
| 28 FT | 19 | 20 | 8 | 8 | 6 | 6.5 | 5 | 6 | 33.8 | 39.0 | 39.0 | 39.0 | 6 | 13 | 47.0 | 55.0 | 6 | 13 | 33.0 | 35.0 | 6 | 6.5 | 5 | 6 | 28.8 | 76 | 88 | 100 | 6 | 6 | 41.0 | 50.0 | 5 | 12 | 5 | 9.5 | 0 |
| 30 FT | 19 | 21 | 8 | 8 | 6 | 6 | 5 | 6 | 33.8 | 39.0 | 39.0 | 39.0 | 6 | 12 | 47.0 | 55.0 | 6 | 12 | 33.0 | 36.0 | 6 | 6 | 6 | 7.5 | 31.6 | 77 | 89 | 101 | 7 | 7.5 | 44.0 | 53.0 | 5 | 12 | 5 | 9.5 | 0 |
| 32 FT | 20 | 22 | 8 | 8 | 6 | 6.5 | 6 | 7.5 | 37.8 | 44.0 | 44.0 | 44.0 | 6 | 12 | 47.0 | 55.0 | 6 | 12 | 33.0 | 35.0 | 6 | 6 | 6 | 7 | 31.8 | 78 | 90 | 102 | 7 | 7.5 | 44.0 | 53.0 | 5 | 12 | 5 | 9.5 | 0 |
| 34 FT | 21 | 23 | 8 | 8 | 6 | 6 | 6 | 7 | 36.8 | 45.0 | 45.0 | 45.0 | 6 | 12 | 46.0 | 55.0 | 6 | 12 | 32.0 | 34.0 | 6 | 6 | 6 | 6.5 | 30.9 | 79 | 91 | 103 | 7 | 7.5 | 44.0 | 53.0 | 5 | 12 | 5 | 9.5 | 0 |
| 36 FT | 22 | 23 | 8 | 8 | 6 | 6 | 6 | 6.5 | 36.8 | 46.0 | 46.0 | 46.0 | 7 | 15 | 51.0 | 60.0 | 7 | 15 | 36.0 | 38.0 | 6 | 6 | 6 | 6.5 | 31.0 | 79 | 91 | 103 | 7 | 7 | 44.0 | 53.0 | 5 | 12 | 5 | 9.5 | 0 |
| 38 FT | 23 | 24 | 8 | 8 | 7 | 7.5 | 6 | 6 | 36.8 | 47.0 | 47.0 | 47.0 | 7 | 15 | 51.0 | 59.0 | 7 | 15 | 36.0 | 37.0 | 6 | 6 | 6 | 6 | 31.1 | 80 | 92 | 104 | 7 | 7 | 44.0 | 53.0 | 5 | 12 | 5 | 8.5 | 0 |
| 40 FT | 23 | 25 | 8 | 8 | 7 | 7.5 | 6 | 6 | 36.9 | 47.0 | 47.0 | 47.0 | 7 | 15 | 51.0 | 59.0 | 7 | 15 | 36.0 | 38.0 | 6 | 6 | 6 | 6 | 31.1 | 81 | 93 | 105 | 7 | 7 | 44.0 | 53.0 | 5 | 12 | 5 | 8 | 0 |
| 42 FT | 24 | 26 | 8 | 8 | 7 | 7.5 | 6 | 6 | 37.0 | 48.0 | 48.0 | 48.0 | 7 | 14 | 51.0 | 59.0 | 7 | 14 | 36.0 | 37.0 | 7 | 8 | 7 | 6.5 | 34.4 | 82 | 94 | 106 | 7 | 7 | 44.0 | 53.0 | 5 | 12 | 5 | 7.5 | 0 |
| 44 FT | 25 | 26 | 9 | 8 | 7 | 7 | 6 | 6.5 | 37.8 | 49.0 | 49.0 | 49.0 | 7 | 14 | 51.0 | 59.0 | 7 | 14 | 36.0 | 37.0 | 7 | 7.5 | 6 | 6.5 | 32.0 | 82 | 94 | 106 | 7 | 7 | 44.0 | 53.0 | 5 | 12 | 5 | 8.5 | 0 |
| 46 FT | 25 | 27 | 9 | 8 | 7 | 7 | 6 | 6.5 | 37.9 | 49.0 | 49.0 | 49.0 | 7 | 14 | 51.0 | 59.0 | 7 | 14 | 36.0 | 37.0 | 7 | 7.5 | 6 | 6.5 | 32.0 | 83 | 95 | 107 | 7 | 7 | 44.0 | 53.0 | 5 | 12 | 5 | 8 | 0 |
| 48 FT | 26 | 28 | 9 | 8 | 7 | 7 | 6 | 6.5 | 38.0 | 50.0 | 50.0 | 50.0 | 7 | 14 | 51.0 | 58.0 | 7 | 14 | 35.0 | 37.0 | 7 | 7.5 | 6 | 6 | 32.3 | 84 | 96 | 108 | 7 | 7 | 44.0 | 53.0 | 5 | 12 | 5 | 7.5 | 0 |
| 50 FT | 27 | 28 | 9 | 8 | 7 | 7 | 6 | 6 | 38.0 | 51.0 | 51.0 | 51.0 | 7 | 14 | 51.0 | 58.0 | 7 | 14 | 35.0 | 37.0 | 7 | 7 | 6 | 6 | 32.4 | 84 | 96 | 108 | 7 | 6.5 | 44.0 | 53.0 | 5 | 12 | 5 | 7 | 0 |

## SPAN (S) = 10 FT  HEIGHT (HT) = 8 FT OR 9 FT OR 10 FT

| DESIGN FILL | MEMBER THICKNESS | | | | TOP SLAB BARS | | | | | | | | | | | | | | BOTTOM SLAB BARS | | | | | | | | | | | | WALL BARS | | | | |
|---|---|---|---|---|---|---|---|---|---|---|---|---|---|---|---|---|---|---|---|---|---|---|---|---|---|---|---|---|---|---|---|---|---|---|---|
| | | | | | A1 BARS | | J3 BARS | | | | | | H1 BARS | | | | H2 BARS | | | | A2 BARS | | J4 BARS | | | | | | H3 BARS | | | | B1 BARS | | B2 BARS | |
| | | | | | | | | | | K2 | | | | | | | | | | | | | | K3 | | | | | | | | | | | |
| | TS | BS | TX | TI | SIZE | SPA. | SIZE | SPA. | C1 | HT=8′ | HT=9′ | HT=10′ | SIZE | SPA. | C5 | Q8 | SIZE | SPA. | C6 | Q9 | SIZE | SPA. | SIZE | SPA. | C4 | HT=8′ | HT=9′ | HT=10′ | SIZE | SPA. | C7 | Q10 | SIZE | SPA. | SIZE | SPA. | G1 |
| 1 FT | 13 | 9 | 8 | 8 | 5 | 6.5 | 5 | 8.5 | 54.9 | 29.0 | 33.0 | 33.0 | 5 | 16 | 100.5 | 74.5 | 5 | 16 | 30.0 | 30.0 | 5 | 8.5 | 6 | 6.5 | 74.1 | 101 | 113 | 125 | 5 | 6 | 46.0 | 47.0 | 5 | 12 | 5 | 12 | 12 |
| 2 FT | 13 | 9 | 8 | 8 | 5 | 6.5 | 5 | 8 | 54.9 | 29.0 | 33.0 | 33.0 | 5 | 14 | 100.5 | 74.5 | 5 | 14 | 28.0 | 28.0 | 5 | 7.5 | 6 | 6 | 65.8 | 101 | 113 | 125 | 6 | 7 | 47.0 | 50.0 | 5 | 12 | 5 | 11.5 | 12 |
| 4 FT | 9 | 9 | 9 | 8 | 5 | 7 | 5 | 6 | 65.9 | 29.0 | 29.0 | 29.0 | 5 | 13 | 74.0 | 76.0 | 5 | 13 | 30.0 | 31.0 | 5 | 7.5 | 6 | 6.5 | 57.6 | 101 | 113 | 125 | 6 | 6.5 | 46.0 | 50.0 | 5 | 12 | 5 | 11.5 | 12 |
| 6 FT | 9 | 9 | 9 | 8 | 5 | 8 | 5 | 6 | 51.8 | 29.0 | 29.0 | 29.0 | 5 | 13 | 51.0 | 57.0 | 5 | 13 | 29.0 | 29.0 | 5 | 7 | 6 | 6 | 52.9 | 101 | 113 | 125 | 6 | 6 | 45.0 | 48.0 | 5 | 12 | 5 | 11.5 | 12 |
| 8 FT | 9 | 10 | 9 | 8 | 5 | 8 | 5 | 6 | 48.1 | 29.0 | 29.0 | 29.0 | 6 | 15 | 49.0 | 52.0 | 6 | 15 | 30.0 | 31.0 | 5 | 7 | 6 | 6.5 | 51.0 | 102 | 114 | 126 | 6 | 6 | 44.0 | 49.0 | 5 | 12 | 5 | 11 | 0 |
| 10 FT | 10 | 11 | 9 | 8 | 5 | 8 | 5 | 6 | 46.5 | 30.0 | 30.0 | 30.0 | 5 | 12 | 44.0 | 48.0 | 5 | 12 | 27.0 | 28.0 | 5 | 6.5 | 6 | 6.5 | 49.5 | 103 | 115 | 127 | 6 | 6.5 | 43.0 | 49.0 | 5 | 12 | 5 | 10.5 | 0 |
| 12 FT | 11 | 12 | 9 | 8 | 5 | 7.5 | 6 | 7 | 48.1 | 31.0 | 31.0 | 35.0 | 6 | 16 | 45.0 | 50.0 | 6 | 16 | 30.0 | 31.0 | 5 | 6 | 6 | 6.5 | 48.4 | 104 | 116 | 128 | 6 | 6.5 | 43.0 | 49.0 | 5 | 12 | 5 | 9.5 | 0 |
| 14 FT | 12 | 13 | 9 | 8 | 5 | 7 | 6 | 7 | 47.0 | 32.0 | 32.0 | 36.0 | 6 | 16 | 45.0 | 50.0 | 6 | 16 | 29.0 | 31.0 | 5 | 6 | 6 | 7 | 47.4 | 105 | 117 | 129 | 6 | 6.5 | 42.0 | 49.0 | 5 | 12 | 5 | 8.5 | 0 |
| 16 FT | 13 | 14 | 9 | 8 | 5 | 6.5 | 6 | 7 | 46.0 | 33.0 | 33.0 | 37.0 | 6 | 16 | 44.0 | 50.0 | 6 | 16 | 29.0 | 31.0 | 6 | 8 | 6 | 7 | 46.5 | 106 | 118 | 130 | 6 | 7 | 42.0 | 49.0 | 5 | 12 | 5 | 8.5 | 0 |
| 18 FT | 14 | 15 | 9 | 8 | 5 | 6 | 6 | 7 | 45.3 | 34.0 | 34.0 | 38.0 | 6 | 16 | 43.0 | 49.0 | 6 | 16 | 29.0 | 31.0 | 6 | 7.5 | 6 | 7 | 45.9 | 107 | 119 | 131 | 6 | 7 | 42.0 | 49.0 | 5 | 12 | 5 | 8.5 | 0 |
| 20 FT | 15 | 16 | 9 | 8 | 6 | 8 | 6 | 7 | 50.5 | 35.0 | 35.0 | 39.0 | 6 | 16 | 49.0 | 55.0 | 6 | 16 | 35.0 | 37.0 | 6 | 7 | 6 | 6.5 | 45.3 | 108 | 120 | 132 | 6 | 7 | 42.0 | 49.0 | 5 | 12 | 5 | 8.5 | 0 |
| 22 FT | 15 | 17 | 11 | 8 | 6 | 7.5 | 5 | 6 | 47.1 | 35.0 | 35.0 | 35.0 | 6 | 15 | 48.0 | 55.0 | 6 | 15 | 35.0 | 37.0 | 6 | 7 | 5 | 7 | 42.1 | 109 | 121 | 133 | 6 | 6.5 | 42.0 | 50.0 | 5 | 12 | 5 | 8 | 0 |
| 24 FT | 17 | 18 | 11 | 8 | 6 | 7.5 | 6 | 8.5 | 50.8 | 37.0 | 37.0 | 37.0 | 6 | 14 | 48.0 | 55.0 | 6 | 14 | 33.0 | 36.0 | 6 | 6.5 | 5 | 6.5 | 42.0 | 110 | 122 | 134 | 6 | 6.5 | 42.0 | 50.0 | 5 | 12 | 5 | 7.5 | 0 |
| 26 FT | 18 | 19 | 11 | 8 | 6 | 7 | 6 | 8 | 50.4 | 38.0 | 38.0 | 38.0 | 6 | 13 | 47.0 | 55.0 | 6 | 13 | 33.0 | 35.0 | 6 | 6.5 | 5 | 6 | 41.8 | 111 | 123 | 135 | 6 | 6 | 42.0 | 50.0 | 5 | 12 | 5 | 7.5 | 0 |
| 28 FT | 18 | 20 | 12 | 8 | 6 | 7 | 6 | 8 | 51.0 | 38.0 | 38.0 | 38.0 | 6 | 13 | 47.0 | 54.0 | 6 | 13 | 34.0 | 36.0 | 6 | 6.5 | 5 | 6.5 | 41.9 | 112 | 124 | 136 | 6 | 6 | 42.0 | 50.0 | 5 | 12 | 5 | 7.5 | 0 |
| 30 FT | 19 | 21 | 12 | 8 | 6 | 6.5 | 6 | 7.5 | 50.9 | 39.0 | 39.0 | 39.0 | 6 | 13 | 47.0 | 54.0 | 6 | 13 | 33.0 | 35.0 | 6 | 6.5 | 5 | 6.5 | 41.9 | 113 | 125 | 137 | 7 | 7.5 | 45.0 | 53.0 | 5 | 12 | 5 | 7 | 0 |
| 32 FT | 20 | 22 | 12 | 8 | 6 | 6.5 | 6 | 7 | 50.9 | 40.0 | 40.0 | 40.0 | 6 | 12 | 47.0 | 54.0 | 6 | 12 | 32.0 | 34.0 | 6 | 6 | 5 | 6.5 | 42.0 | 114 | 126 | 138 | 7 | 7.5 | 45.0 | 53.0 | 5 | 12 | 5 | 7 | 0 |
| 34 FT | 21 | 23 | 12 | 8 | 6 | 6 | 6 | 7.5 | 49.6 | 41.0 | 41.0 | 41.0 | 6 | 12 | 46.0 | 53.0 | 6 | 12 | 31.0 | 33.0 | 6 | 6 | 5 | 6.5 | 40.8 | 115 | 127 | 139 | 7 | 7.5 | 45.0 | 53.0 | 5 | 12 | 5 | 7 | 0 |
| 36 FT | 22 | 24 | 12 | 8 | 6 | 6 | 6 | 7 | 49.8 | 42.0 | 42.0 | 42.0 | 7 | 15 | 51.0 | 58.0 | 7 | 15 | 36.0 | 37.0 | 6 | 6 | 5 | 6.5 | 40.9 | 116 | 128 | 140 | 7 | 7.5 | 45.0 | 53.0 | 5 | 12 | 5 | 7 | 0 |
| 38 FT | 22 | 24 | 13 | 8 | 6 | 6 | 6 | 7.5 | 50.4 | 42.0 | 42.0 | 42.0 | 7 | 15 | 51.0 | 58.0 | 7 | 15 | 36.0 | 38.0 | 6 | 6 | 5 | 6 | 41.1 | 116 | 128 | 140 | 7 | 7 | 45.0 | 53.0 | 5 | 12 | 5 | 6.5 | 0 |
| 40 FT | 23 | 25 | 13 | 8 | 7 | 7.5 | 6 | 7.5 | 50.4 | 43.0 | 43.0 | 43.0 | 7 | 15 | 51.0 | 58.0 | 7 | 15 | 36.0 | 37.0 | 6 | 6 | 5 | 6 | 41.4 | 117 | 129 | 141 | 7 | 7 | 45.0 | 53.0 | 5 | 12 | 5 | 6.5 | 0 |
| 42 FT | 24 | 26 | 13 | 8 | 7 | 7.5 | 6 | 6.5 | 50.5 | 44.0 | 44.0 | 44.0 | 7 | 15 | 51.0 | 57.0 | 7 | 15 | 35.0 | 36.0 | 7 | 8 | 5 | 6 | 41.5 | 118 | 130 | 142 | 7 | 7 | 45.0 | 53.0 | 5 | 12 | 5 | 6.5 | 0 |
| 44 FT | 24 | 27 | 14 | 8 | 7 | 7.5 | 6 | 7 | 51.3 | 44.0 | 44.0 | 44.0 | 7 | 14 | 51.0 | 57.0 | 7 | 14 | 36.0 | 37.0 | 7 | 8 | 5 | 6 | 41.9 | 119 | 131 | 143 | 7 | 7 | 45.0 | 54.0 | 5 | 12 | 5 | 6 | 0 |
| 46 FT | 25 | 27 | 14 | 8 | 7 | 7 | 6 | 7 | 51.3 | 45.0 | 45.0 | 45.0 | 7 | 14 | 51.0 | 57.0 | 7 | 14 | 35.0 | 36.0 | 7 | 7.5 | 5 | 6 | 42.0 | 119 | 131 | 143 | 7 | 6.5 | 45.0 | 53.0 | 5 | 12 | 5 | 6 | 0 |
| 48 FT | 26 | 28 | 14 | 8 | 7 | 7 | 6 | 7 | 51.4 | 46.0 | 46.0 | 46.0 | 7 | 15 | 51.0 | 56.0 | 7 | 15 | 35.0 | 36.0 | 7 | 7.5 | 5 | 6 | 42.1 | 120 | 132 | 144 | 7 | 6.5 | 45.0 | 53.0 | 5 | 12 | 5 | 6 | 0 |
| 50 FT | 26 | 29 | 15 | 8 | 7 | 7 | 6 | 7 | 52.1 | 50.0 | 50.0 | 50.0 | 7 | 14 | 51.0 | 56.0 | 7 | 14 | 35.0 | 36.0 | 7 | 7.5 | 6 | 8 | 45.5 | 121 | 133 | 145 | 7 | 6.5 | 45.0 | 54.0 | 5 | 12 | 6 | 8 | 0 |

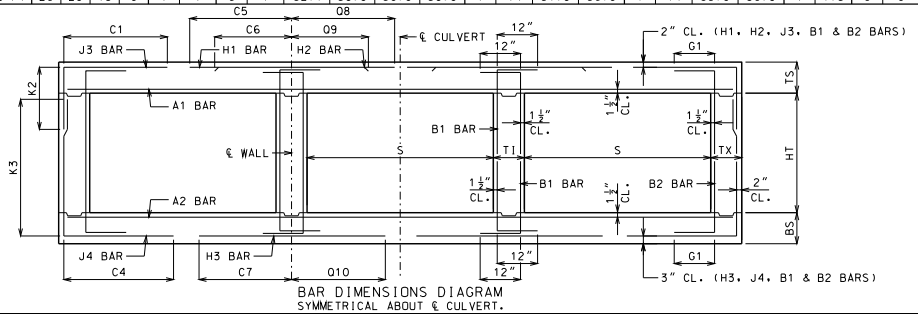


BAR DIMENSIONS DIAGRAM
SYMMETRICAL ABOUT ℄ CULVERT.

GENERAL NOTES:

IF DESIGN FILL IS BETWEEN TABULATED DESIGN FILLS, USE THE NEXT GREATER TABULATED DESIGN FILL, EXCEPT FOR DESIGN FILLS BETWEEN 2 FEET AND 4 FEET. FOR DESIGN FILLS BETWEEN 2 FEET AND 4 FEET USE THE GREATER MEMBER THICKNESS, AREA OF REINFORCEMENT AND BAR DIMENSIONS FROM THE 2 FEET AND 4 FEET TABULATED DESIGN FILLS. AREA OF REINFORCEMENT EQUALS BAR AREA PER FOOT SPACING.

SPECIAL DESIGNS ARE REQUIRED WHEN THE DESIGN FILL IS LESS THAN 1 FOOT OR GREATER THAN 50 FEET.

DIMENSIONS ARE IN INCHES UNLESS OTHERWISE SPECIFIED.

DESIGN FILLS ARE MEASURED FROM THE TOP OF TOP SLAB TO THE TOP OF EARTH FILL OR ROADWAY.

CULVERTS MEET STRENGTH AND SERVICEABILITY REQUIREMENTS FOR THE DESIGN VEHICULAR LIVE LOAD HL-93 MINUS THE LANE LOAD.


MISSOURI HIGHWAYS AND TRANSPORTATION COMMISSION
105 WEST CAPITOL
JEFFERSON CITY, MO 65102
1-888-ASK-MODOT (1-888-275-6636)


STATE OF MISSOURI — DENNIS W. HECKMAN — NUMBER PE-27141 — PROFESSIONAL ENGINEER
THIS SHEET HAS BEEN SIGNED, SEALED AND DATED ELECTRONICALLY.

# CONCRETE TRIPLE BOX CULVERT

MEMBER THICKNESS
BAR SIZE, SPACING & DIMENSIONS

SPAN (S): 10 FEET
HEIGHT (HT): 5 THRU 10 FEET

DATE EFFECTIVE: 12/01/2011
DATE PREPARED: 9/29/2011

703.87

SHEET NO.
14 OF 27

IF A SEAL IS PRESENT ON THIS SHEET IT HAS BEEN ELECTRONICALLY SEALED AND DATED.

SPAN (S) = 10 FT  HEIGHT (HT) = 11 FT OR 12 FT OR 13 FT

| DESIGN FILL | MEMBER THICKNESS | | | | TOP SLAB BARS | | | | | | | | | | | | | | | BOTTOM SLAB BARS | | | | | | | | | | | | WALL BARS | | | | |
|---|---|---|---|---|---|---|---|---|---|---|---|---|---|---|---|---|---|---|---|---|---|---|---|---|---|---|---|---|---|---|---|---|---|---|---|
| | | | | | A1 BARS | | J3 BARS | | | | | | H1 BARS | | | | H2 BARS | | | | A2 BARS | | J4 BARS | | | | | | H3 BARS | | | | B1 BARS | | B2 BARS | |
| | | | | | | | | | | K2 | | | | | | | | | | | | | | K3 | | | | | | | | | | | |
| | TS | BS | TX | TI | SIZE | SPA. | SIZE | SPA. | C1 | HT=11' | HT=12' | HT=13' | SIZE | SPA. | C5 | Q8 | SIZE | SPA. | C6 | Q9 | SIZE | SPA. | SIZE | SPA. | C4 | HT=11' | HT=12' | HT=13' | SIZE | SPA. | C7 | Q10 | SIZE | SPA. | SIZE | SPA. | G1 |
| 1 FT | 13 | 10 | 9 | 10 | 5 | 6.5 | 5 | 6.5 | 55.9 | 33.0 | 33.0 | 33.0 | 5 | 16 | 101.5 | 75.5 | 5 | 16 | 30.0 | 29.0 | 5 | 8.5 | 6 | 6 | 82.3 | 138 | 150 | 162 | 5 | 6.5 | 49.0 | 49.0 | 5 | 10 | 5 | 8.5 | 12 |
| 2 FT | 13 | 10 | 10 | 10 | 5 | 6.5 | 5 | 6.5 | 56.5 | 33.0 | 33.0 | 33.0 | 5 | 14 | 101.5 | 75.5 | 5 | 14 | 29.0 | 29.0 | 5 | 8 | 6 | 6.5 | 83.0 | 138 | 150 | 162 | 5 | 6.5 | 47.0 | 48.0 | 5 | 12 | 5 | 8 | 12 |
| 4 FT | 9 | 10 | 10 | 10 | 5 | 7 | 6 | 7 | 56.5 | 29.0 | 29.0 | 33.0 | 5 | 13 | 101.5 | 77.0 | 5 | 13 | 31.0 | 31.0 | 5 | 7 | 6 | 6 | 81.3 | 138 | 150 | 162 | 5 | 6 | 46.0 | 48.0 | 5 | 11 | 5 | 8 | 12 |
| 6 FT | 9 | 11 | 10 | 10 | 5 | 8 | 6 | 7 | 75.6 | 29.0 | 29.0 | 33.0 | 5 | 13 | 54.0 | 53.0 | 5 | 13 | 29.0 | 29.0 | 5 | 7 | 6 | 6 | 77.8 | 139 | 151 | 163 | 5 | 6 | 44.0 | 47.0 | 5 | 12 | 5 | 8 | 12 |
| 8 FT | 9 | 11 | 11 | 10 | 5 | 8 | 6 | 7 | 64.6 | 29.0 | 29.0 | 33.0 | 5 | 12 | 47.0 | 48.0 | 5 | 12 | 28.0 | 28.0 | 5 | 6.5 | 6 | 6.5 | 69.5 | 139 | 151 | 163 | 6 | 7 | 45.0 | 49.0 | 5 | 12 | 5 | 7.5 | 0 |
| 10 FT | 10 | 11 | 11 | 10 | 5 | 8 | 5 | 6 | 61.1 | 30.0 | 30.0 | 30.0 | 5 | 12 | 46.0 | 47.0 | 5 | 12 | 28.0 | 28.0 | 5 | 6 | 6 | 6 | 65.8 | 139 | 151 | 163 | 6 | 6.5 | 45.0 | 48.0 | 5 | 12 | 5 | 7.5 | 0 |
| 12 FT | 11 | 12 | 11 | 10 | 5 | 7.5 | 5 | 6 | 60.3 | 31.0 | 31.0 | 31.0 | 5 | 12 | 44.0 | 47.0 | 5 | 12 | 27.0 | 28.0 | 5 | 6 | 6 | 6 | 65.1 | 140 | 152 | 164 | 6 | 6.5 | 44.0 | 49.0 | 5 | 12 | 5 | 7.5 | 0 |
| 14 FT | 12 | 13 | 11 | 10 | 5 | 7 | 6 | 7.5 | 62.6 | 32.0 | 32.0 | 36.0 | 5 | 12 | 43.0 | 46.0 | 5 | 12 | 27.0 | 28.0 | 5 | 6 | 6 | 6.5 | 64.4 | 141 | 153 | 165 | 6 | 6.5 | 44.0 | 49.0 | 5 | 12 | 5 | 7 | 0 |
| 16 FT | 13 | 14 | 12 | 10 | 5 | 6.5 | 6 | 8 | 61.3 | 33.0 | 33.0 | 37.0 | 5 | 12 | 42.0 | 46.0 | 5 | 12 | 27.0 | 28.0 | 6 | 8 | 6 | 7 | 63.0 | 142 | 154 | 166 | 6 | 7 | 44.0 | 49.0 | 5 | 12 | 5 | 7 | 0 |
| 18 FT | 13 | 15 | 12 | 10 | 5 | 6.5 | 6 | 7 | 59.3 | 33.0 | 37.0 | 37.0 | 6 | 15 | 45.0 | 48.0 | 6 | 15 | 30.0 | 31.0 | 6 | 7.5 | 6 | 6.5 | 62.8 | 143 | 155 | 167 | 6 | 7 | 44.0 | 49.0 | 5 | 12 | 5 | 7 | 0 |
| 20 FT | 14 | 16 | 13 | 10 | 5 | 6 | 6 | 7.5 | 58.8 | 34.0 | 38.0 | 38.0 | 6 | 15 | 44.0 | 48.0 | 6 | 15 | 30.0 | 31.0 | 6 | 7 | 6 | 7 | 61.8 | 144 | 156 | 168 | 6 | 7 | 44.0 | 49.0 | 5 | 12 | 5 | 6.5 | 0 |
| 22 FT | 15 | 17 | 13 | 10 | 6 | 8 | 6 | 6.5 | 64.6 | 35.0 | 39.0 | 39.0 | 6 | 15 | 50.0 | 54.0 | 6 | 15 | 36.0 | 37.0 | 6 | 7 | 6 | 6.5 | 61.4 | 145 | 157 | 169 | 6 | 6.5 | 44.0 | 50.0 | 5 | 12 | 5 | 6.5 | 0 |
| 24 FT | 16 | 18 | 14 | 10 | 6 | 8 | 6 | 7 | 64.6 | 36.0 | 40.0 | 40.0 | 6 | 15 | 49.0 | 54.0 | 6 | 15 | 35.0 | 37.0 | 6 | 6.5 | 6 | 6.5 | 60.5 | 146 | 158 | 170 | 6 | 6.5 | 44.0 | 50.0 | 5 | 12 | 5 | 6 | 0 |
| 26 FT | 17 | 19 | 14 | 10 | 6 | 7.5 | 6 | 6.5 | 64.5 | 37.0 | 41.0 | 41.0 | 6 | 14 | 49.0 | 54.0 | 6 | 14 | 35.0 | 37.0 | 6 | 6.5 | 6 | 6.5 | 60.4 | 147 | 159 | 171 | 6 | 6 | 44.0 | 50.0 | 5 | 12 | 5 | 6 | 0 |
| 28 FT | 18 | 20 | 15 | 10 | 6 | 7 | 6 | 6.5 | 64.9 | 42.0 | 42.0 | 42.0 | 6 | 13 | 48.0 | 54.0 | 6 | 13 | 34.0 | 36.0 | 6 | 6.5 | 6 | 6.5 | 60.3 | 148 | 160 | 172 | 6 | 6 | 44.0 | 50.0 | 5 | 12 | 6 | 8 | 0 |
| 30 FT | 19 | 21 | 15 | 10 | 6 | 6.5 | 6 | 6.5 | 65.1 | 43.0 | 43.0 | 43.0 | 6 | 13 | 48.0 | 54.0 | 6 | 13 | 33.0 | 35.0 | 6 | 6.5 | 6 | 6.5 | 60.4 | 149 | 161 | 173 | 7 | 7.5 | 47.0 | 53.0 | 5 | 12 | 6 | 8 | 0 |
| 32 FT | 20 | 22 | 16 | 10 | 6 | 6.5 | 6 | 6.5 | 65.5 | 44.0 | 44.0 | 44.0 | 6 | 12 | 48.0 | 53.0 | 6 | 12 | 33.0 | 34.0 | 6 | 6 | 6 | 7 | 60.5 | 150 | 162 | 174 | 7 | 7.5 | 47.0 | 53.0 | 5 | 12 | 6 | 8 | 0 |
| 34 FT | 20 | 23 | 16 | 10 | 6 | 6.5 | 6 | 6.5 | 63.5 | 44.0 | 44.0 | 44.0 | 6 | 12 | 47.0 | 53.0 | 6 | 12 | 33.0 | 35.0 | 6 | 6 | 6 | 7.5 | 58.9 | 151 | 163 | 175 | 7 | 7.5 | 46.0 | 53.0 | 5 | 12 | 6 | 8 | 0 |
| 36 FT | 21 | 24 | 16 | 10 | 6 | 6 | 6 | 6 | 63.9 | 45.0 | 45.0 | 45.0 | 6 | 12 | 47.0 | 53.0 | 6 | 12 | 32.0 | 34.0 | 6 | 6 | 6 | 7 | 59.1 | 152 | 164 | 176 | 7 | 7.5 | 46.0 | 53.0 | 5 | 12 | 6 | 8 | 0 |
| 38 FT | 22 | 24 | 17 | 10 | 6 | 6 | 6 | 6 | 64.4 | 46.0 | 46.0 | 46.0 | 7 | 15 | 52.0 | 58.0 | 7 | 15 | 37.0 | 38.0 | 6 | 6 | 6 | 7 | 59.0 | 152 | 164 | 176 | 7 | 7 | 46.0 | 53.0 | 5 | 12 | 6 | 7.5 | 0 |
| 40 FT | 23 | 25 | 17 | 10 | 6 | 6 | 6 | 6 | 64.6 | 47.0 | 47.0 | 47.0 | 7 | 15 | 52.0 | 57.0 | 7 | 15 | 36.0 | 37.0 | 6 | 6 | 6 | 7 | 59.3 | 153 | 165 | 177 | 7 | 7 | 46.0 | 53.0 | 5 | 12 | 6 | 7.5 | 0 |
| 42 FT | 23 | 26 | 18 | 10 | 7 | 7.5 | 6 | 6 | 65.0 | 47.0 | 47.0 | 47.0 | 7 | 15 | 52.0 | 57.0 | 7 | 15 | 37.0 | 38.0 | 7 | 8 | 6 | 6.5 | 59.6 | 154 | 166 | 178 | 7 | 7 | 46.0 | 54.0 | 5 | 12 | 6 | 7 | 0 |
| 44 FT | 24 | 27 | 19 | 10 | 7 | 7.5 | 6 | 6 | 65.8 | 44.0 | 48.0 | 48.0 | 7 | 15 | 52.0 | 57.0 | 7 | 15 | 36.0 | 37.0 | 7 | 8 | 6 | 6.5 | 60.0 | 155 | 167 | 179 | 7 | 7 | 46.0 | 54.0 | 5 | 12 | 6 | 7 | 0 |
| 46 FT | 24 | 27 | 19 | 10 | 7 | 7 | 6 | 6 | 65.6 | 48.0 | 48.0 | 48.0 | 7 | 14 | 52.0 | 57.0 | 7 | 14 | 36.0 | 38.0 | 7 | 7.5 | 6 | 6.5 | 59.9 | 155 | 167 | 179 | 7 | 6.5 | 46.0 | 54.0 | 5 | 12 | 6 | 6.5 | 0 |
| 48 FT | 25 | 28 | 20 | 10 | 7 | 7 | 6 | 6 | 66.4 | 45.0 | 49.0 | 49.0 | 7 | 14 | 52.0 | 56.0 | 7 | 14 | 36.0 | 37.0 | 7 | 7.5 | 6 | 6 | 60.4 | 156 | 168 | 180 | 7 | 6.5 | 46.0 | 54.0 | 5 | 12 | 6 | 6.5 | 0 |
| 50 FT | 26 | 29 | 20 | 10 | 7 | 7 | 7 | 7.5 | 71.6 | 50.0 | 50.0 | 50.0 | 7 | 15 | 51.0 | 55.0 | 7 | 15 | 36.0 | 37.0 | 7 | 7.5 | 6 | 6 | 60.6 | 157 | 169 | 181 | 7 | 6.5 | 47.0 | 54.0 | 5 | 12 | 6 | 6.5 | 0 |

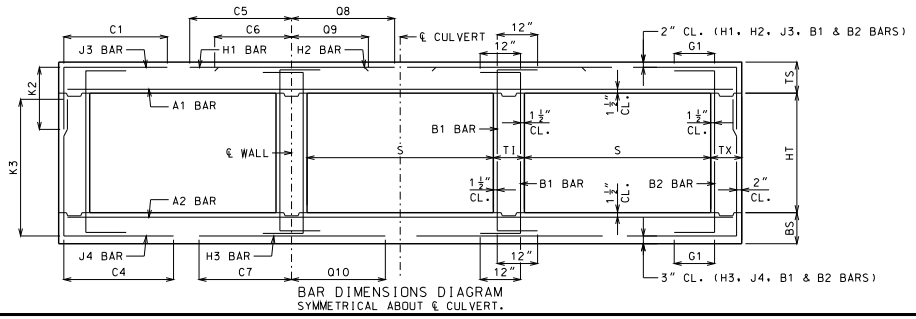


BAR DIMENSIONS DIAGRAM
SYMMETRICAL ABOUT ℄ CULVERT.

GENERAL NOTES:

IF DESIGN FILL IS BETWEEN TABULATED DESIGN FILLS, USE THE NEXT GREATER TABULATED DESIGN FILL, EXCEPT FOR DESIGN FILLS BETWEEN 2 FEET AND 4 FEET. FOR DESIGN FILLS BETWEEN 2 FEET AND 4 FEET USE THE GREATER MEMBER THICKNESS, AREA OF REINFORCEMENT AND BAR DIMENSIONS FROM THE 2 FEET AND 4 FEET TABULATED DESIGN FILLS. AREA OF REINFORCEMENT EQUALS BAR AREA PER FOOT SPACING.

SPECIAL DESIGNS ARE REQUIRED WHEN THE DESIGN FILL IS LESS THAN 1 FOOT OR GREATER THAN 50 FEET.

DIMENSIONS ARE IN INCHES UNLESS OTHERWISE SPECIFIED.

DESIGN FILLS ARE MEASURED FROM THE TOP OF TOP SLAB TO THE TOP OF EARTH FILL OR ROADWAY.

CULVERTS MEET STRENGTH AND SERVICEABILITY REQUIREMENTS FOR THE DESIGN VEHICULAR LIVE LOAD HL-93 MINUS THE LANE LOAD.


MISSOURI HIGHWAYS AND TRANSPORTATION COMMISSION
105 WEST CAPITOL
JEFFERSON CITY, MO 65102
1-888-ASK-MODOT (1-888-275-6636)


STATE OF MISSOURI
DENNIS W. HECKMAN
NUMBER PE-27141
PROFESSIONAL ENGINEER
THIS SHEET HAS BEEN SIGNED, SEALED AND DATED ELECTRONICALLY.

# CONCRETE TRIPLE BOX CULVERT

MEMBER THICKNESS
BAR SIZE, SPACING & DIMENSIONS

SPAN (S): 10 FEET
HEIGHT (HT): 11 THRU 13 FEET

DATE EFFECTIVE: 12/01/2011
DATE PREPARED: 9/29/2011

703.87

SHEET NO.
15 OF 27

IF A SEAL IS PRESENT ON THIS SHEET IT HAS BEEN ELECTRONICALLY SEALED AND DATED.

## SPAN (S) = 11 FT  HEIGHT (HT) = 6 FT OR 7 FT OR 8 FT

| DESIGN FILL | MEMBER THICKNESS | | | | TOP SLAB BARS | | | | | | | | | | | | | | BOTTOM SLAB BARS | | | | | | | | | | | | WALL BARS | | | | |
|---|---|---|---|---|---|---|---|---|---|---|---|---|---|---|---|---|---|---|---|---|---|---|---|---|---|---|---|---|---|---|---|---|---|---|---|
| | | | | | A1 BARS | | J3 BARS | | | | | | H1 BARS | | | | H2 BARS | | | | A2 BARS | | J4 BARS | | | | | | H3 BARS | | | | B1 BARS | | B2 BARS | |
| | TS | BS | TX | TI | SIZE | SPA. | SIZE | SPA. | C1 | K2 HT=6′ | K2 HT=7′ | K2 HT=8′ | SIZE | SPA. | C5 | Q8 | SIZE | SPA. | C6 | Q9 | SIZE | SPA. | SIZE | SPA. | C4 | K3 HT=6′ | K3 HT=7′ | K3 HT=8′ | SIZE | SPA. | C7 | Q10 | SIZE | SPA. | SIZE | SPA. | G1 |
| 1 FT | 13 | 9 | 8 | 8 | 5 | 6.5 | 5 | 9 | 58.5 | 29.0 | 29.0 | 33.0 | 5 | 13 | 108.5 | 80.5 | 5 | 13 | 30.0 | 33.0 | 5 | 8.5 | 5 | 6 | 52.6 | 77 | 89 | 101 | 6 | 7 | 50.0 | 53.0 | 5 | 12 | 5 | 12 | 12 |
| 2 FT | 14 | 9 | 8 | 8 | 5 | 6 | 4 | 6 | 55.5 | 30.0 | 30.0 | 30.0 | 5 | 14 | 106.5 | 80.5 | 5 | 14 | 29.0 | 28.0 | 5 | 7.5 | 6 | 6.5 | 50.8 | 77 | 89 | 101 | 6 | 6.5 | 49.0 | 52.0 | 5 | 12 | 5 | 12 | 12 |
| 4 FT | 10 | 9 | 8 | 8 | 5 | 6.5 | 5 | 6 | 49.1 | 30.0 | 30.0 | 30.0 | 5 | 12 | 66.0 | 82.0 | 5 | 12 | 32.0 | 33.0 | 5 | 7.5 | 6 | 6.5 | 45.9 | 77 | 89 | 101 | 6 | 6 | 49.0 | 52.0 | 5 | 11.5 | 5 | 12 | 12 |
| 6 FT | 10 | 10 | 8 | 8 | 5 | 7 | 5 | 6 | 42.8 | 30.0 | 30.0 | 30.0 | 5 | 12 | 53.0 | 63.0 | 5 | 12 | 30.0 | 31.0 | 5 | 7 | 5 | 6 | 39.8 | 78 | 90 | 102 | 6 | 6 | 47.0 | 52.0 | 5 | 12 | 5 | 12 | 12 |
| 8 FT | 10 | 11 | 8 | 8 | 5 | 7 | 6 | 7 | 43.0 | 26.0 | 30.0 | 30.0 | 6 | 15 | 52.0 | 56.0 | 6 | 15 | 32.0 | 32.0 | 5 | 6.5 | 5 | 6.5 | 37.4 | 79 | 91 | 103 | 6 | 6.5 | 46.0 | 52.0 | 5 | 12 | 5 | 12 | 0 |
| 10 FT | 11 | 12 | 8 | 8 | 5 | 7 | 5 | 6 | 37.6 | 27.0 | 31.0 | 31.0 | 6 | 15 | 50.0 | 55.0 | 6 | 15 | 31.0 | 32.0 | 5 | 6 | 5 | 7 | 35.6 | 80 | 92 | 104 | 6 | 6.5 | 45.0 | 52.0 | 5 | 12 | 5 | 12 | 0 |
| 12 FT | 12 | 13 | 8 | 8 | 5 | 7 | 5 | 6.5 | 36.0 | 28.0 | 32.0 | 32.0 | 6 | 15 | 48.0 | 54.0 | 6 | 15 | 31.0 | 32.0 | 5 | 6 | 5 | 7.5 | 34.6 | 81 | 93 | 105 | 6 | 6.5 | 45.0 | 52.0 | 5 | 12 | 5 | 12 | 0 |
| 14 FT | 13 | 14 | 8 | 8 | 5 | 6.5 | 5 | 7 | 34.6 | 33.0 | 33.0 | 33.0 | 6 | 15 | 47.0 | 54.0 | 6 | 15 | 31.0 | 32.0 | 6 | 8 | 5 | 7.5 | 33.8 | 82 | 94 | 106 | 6 | 6.5 | 44.0 | 53.0 | 5 | 12 | 5 | 12 | 0 |
| 16 FT | 14 | 15 | 8 | 8 | 5 | 6 | 5 | 7 | 33.6 | 34.0 | 34.0 | 34.0 | 6 | 14 | 46.0 | 53.0 | 6 | 14 | 30.0 | 32.0 | 6 | 7.5 | 5 | 7.5 | 33.1 | 83 | 95 | 107 | 6 | 6.5 | 44.0 | 53.0 | 5 | 12 | 5 | 12 | 0 |
| 18 FT | 15 | 16 | 8 | 8 | 6 | 8 | 5 | 6.5 | 37.9 | 35.0 | 35.0 | 35.0 | 6 | 14 | 51.0 | 59.0 | 6 | 14 | 36.0 | 38.0 | 6 | 7 | 5 | 7.5 | 32.6 | 84 | 96 | 108 | 6 | 6.5 | 44.0 | 53.0 | 5 | 12 | 5 | 11 | 0 |
| 20 FT | 16 | 17 | 8 | 8 | 6 | 8 | 5 | 6.5 | 37.3 | 36.0 | 36.0 | 36.0 | 6 | 14 | 51.0 | 59.0 | 6 | 14 | 36.0 | 38.0 | 6 | 7 | 5 | 7 | 32.1 | 85 | 97 | 109 | 6 | 6.5 | 44.0 | 53.0 | 5 | 12 | 5 | 10 | 0 |
| 22 FT | 17 | 18 | 8 | 8 | 6 | 7.5 | 5 | 6 | 36.9 | 37.0 | 37.0 | 37.0 | 6 | 14 | 50.0 | 59.0 | 6 | 14 | 36.0 | 38.0 | 6 | 6.5 | 5 | 6.5 | 31.9 | 86 | 98 | 110 | 6 | 6.5 | 44.0 | 53.0 | 5 | 12 | 5 | 9.5 | 0 |
| 24 FT | 18 | 19 | 8 | 8 | 6 | 7 | 5 | 6 | 36.5 | 38.0 | 38.0 | 38.0 | 6 | 13 | 50.0 | 59.0 | 6 | 13 | 36.0 | 38.0 | 6 | 6 | 5 | 6.5 | 31.6 | 87 | 99 | 111 | 6 | 6 | 44.0 | 53.0 | 5 | 12 | 5 | 9.5 | 0 |
| 26 FT | 19 | 21 | 8 | 8 | 6 | 6.5 | 6 | 7.5 | 40.4 | 39.0 | 39.0 | 43.0 | 6 | 13 | 50.0 | 59.0 | 6 | 13 | 35.0 | 38.0 | 6 | 6 | 6 | 7.5 | 34.4 | 89 | 101 | 113 | 7 | 7.5 | 47.0 | 56.0 | 5 | 12 | 5 | 9.5 | 0 |
| 28 FT | 20 | 22 | 9 | 8 | 6 | 6.5 | 5 | 6 | 37.1 | 40.0 | 40.0 | 40.0 | 6 | 12 | 49.0 | 58.0 | 6 | 12 | 35.0 | 37.0 | 6 | 6 | 5 | 6 | 31.9 | 90 | 102 | 114 | 7 | 7.5 | 47.0 | 56.0 | 5 | 12 | 5 | 8.5 | 0 |
| 30 FT | 21 | 23 | 10 | 8 | 6 | 6 | 5 | 6.5 | 37.9 | 41.0 | 41.0 | 41.0 | 6 | 12 | 49.0 | 58.0 | 6 | 12 | 34.0 | 37.0 | 7 | 8 | 5 | 6.5 | 32.4 | 91 | 103 | 115 | 7 | 7 | 47.0 | 56.0 | 5 | 12 | 5 | 8.5 | 0 |
| 32 FT | 22 | 24 | 10 | 8 | 6 | 6 | 5 | 6.5 | 37.8 | 42.0 | 42.0 | 42.0 | 7 | 15 | 54.0 | 63.0 | 7 | 15 | 39.0 | 41.0 | 7 | 7.5 | 5 | 6.5 | 32.5 | 92 | 104 | 116 | 7 | 7 | 47.0 | 57.0 | 5 | 12 | 5 | 8 | 0 |
| 34 FT | 23 | 25 | 10 | 8 | 7 | 7.5 | 5 | 6.5 | 37.8 | 43.0 | 43.0 | 43.0 | 7 | 15 | 54.0 | 63.0 | 7 | 15 | 38.0 | 40.0 | 7 | 7.5 | 5 | 6 | 32.5 | 93 | 105 | 117 | 7 | 6.5 | 47.0 | 57.0 | 5 | 12 | 5 | 8 | 0 |
| 36 FT | 24 | 25 | 10 | 8 | 7 | 7.5 | 5 | 6 | 36.5 | 44.0 | 44.0 | 44.0 | 7 | 14 | 54.0 | 62.0 | 7 | 14 | 37.0 | 39.0 | 7 | 7 | 5 | 6 | 31.6 | 93 | 105 | 117 | 7 | 6.5 | 47.0 | 56.0 | 5 | 12 | 5 | 8 | 0 |
| 38 FT | 25 | 26 | 10 | 8 | 7 | 7 | 5 | 6 | 36.6 | 45.0 | 45.0 | 45.0 | 7 | 14 | 53.0 | 62.0 | 7 | 14 | 37.0 | 38.0 | 7 | 7 | 5 | 6 | 31.8 | 94 | 106 | 118 | 7 | 6.5 | 47.0 | 56.0 | 5 | 12 | 5 | 8 | 0 |
| 40 FT | 25 | 27 | 10 | 8 | 7 | 6.5 | 5 | 6 | 36.8 | 45.0 | 45.0 | 45.0 | 7 | 13 | 53.0 | 62.0 | 7 | 13 | 37.0 | 39.0 | 7 | 7 | 6 | 7 | 34.6 | 95 | 107 | 119 | 7 | 6.5 | 46.0 | 56.0 | 5 | 12 | 5 | 8 | 0 |
| 42 FT | 26 | 28 | 10 | 8 | 7 | 7 | 6 | 7 | 40.8 | 50.0 | 50.0 | 50.0 | 7 | 13 | 53.0 | 62.0 | 7 | 13 | 37.0 | 38.0 | 7 | 7 | 6 | 7 | 34.9 | 96 | 108 | 120 | 7 | 6.5 | 46.0 | 56.0 | 5 | 12 | 5 | 8 | 0 |
| 44 FT | 27 | 29 | 10 | 8 | 7 | 6.5 | 6 | 7 | 40.9 | 51.0 | 51.0 | 51.0 | 7 | 13 | 53.0 | 61.0 | 7 | 13 | 36.0 | 37.0 | 7 | 7 | 6 | 6.5 | 35.0 | 97 | 109 | 121 | 7 | 6.5 | 46.0 | 56.0 | 5 | 12 | 5 | 7.5 | 0 |
| 46 FT | 28 | 29 | 11 | 8 | 7 | 6.5 | 6 | 7.5 | 41.6 | 52.0 | 52.0 | 52.0 | 7 | 13 | 53.0 | 61.0 | 7 | 13 | 36.0 | 37.0 | 7 | 6 | 6 | 7.5 | 35.6 | 97 | 109 | 121 | 7 | 6 | 47.0 | 57.0 | 5 | 12 | 5 | 7.5 | 0 |
| 48 FT | 28 | 30 | 11 | 8 | 7 | 6 | 6 | 7.5 | 41.8 | 52.0 | 52.0 | 52.0 | 7 | 12 | 53.0 | 61.0 | 7 | 12 | 36.0 | 37.0 | 7 | 6.5 | 6 | 7 | 35.6 | 98 | 110 | 122 | 7 | 6 | 47.0 | 57.0 | 5 | 12 | 5 | 7.5 | 0 |
| 50 FT | 29 | 31 | 11 | 8 | 7 | 6 | 6 | 7 | 41.9 | 53.0 | 53.0 | 53.0 | 7 | 12 | 53.0 | 60.0 | 7 | 12 | 36.0 | 37.0 | 7 | 6.5 | 6 | 7 | 35.9 | 99 | 111 | 123 | 7 | 6 | 47.0 | 57.0 | 5 | 12 | 5 | 7.5 | 0 |

## SPAN (S) = 11 FT  HEIGHT (HT) = 9 FT OR 10 FT OR 11 FT

| DESIGN FILL | MEMBER THICKNESS | | | | TOP SLAB BARS | | | | | | | | | | | | | | BOTTOM SLAB BARS | | | | | | | | | | | | WALL BARS | | | | |
|---|---|---|---|---|---|---|---|---|---|---|---|---|---|---|---|---|---|---|---|---|---|---|---|---|---|---|---|---|---|---|---|---|---|---|---|
| | | | | | A1 BARS | | J3 BARS | | | | | | H1 BARS | | | | H2 BARS | | | | A2 BARS | | J4 BARS | | | | | | H3 BARS | | | | B1 BARS | | B2 BARS | |
| | TS | BS | TX | TI | SIZE | SPA. | SIZE | SPA. | C1 | K2 HT=9′ | K2 HT=10′ | K2 HT=11′ | SIZE | SPA. | C5 | Q8 | SIZE | SPA. | C6 | Q9 | SIZE | SPA. | SIZE | SPA. | C4 | K3 HT=9′ | K3 HT=10′ | K3 HT=11′ | SIZE | SPA. | C7 | Q10 | SIZE | SPA. | SIZE | SPA. | G1 |
| 1 FT | 13 | 9 | 9 | 9 | 5 | 6.5 | 5 | 8 | 59.3 | 33.0 | 33.0 | 33.0 | 5 | 13 | 109.5 | 81.5 | 5 | 13 | 31.0 | 33.0 | 5 | 7.5 | 6 | 6 | 74.5 | 113 | 125 | 137 | 6 | 7 | 51.0 | 53.0 | 5 | 11.5 | 5 | 10.5 | 12 |
| 2 FT | 14 | 10 | 9 | 9 | 5 | 6 | 5 | 8 | 59.3 | 34.0 | 34.0 | 34.0 | 5 | 14 | 109.5 | 81.5 | 5 | 14 | 29.0 | 28.0 | 5 | 7.5 | 6 | 7 | 70.6 | 114 | 126 | 138 | 5 | 6 | 47.0 | 50.0 | 5 | 12 | 5 | 10.5 | 12 |
| 4 FT | 10 | 10 | 9 | 9 | 5 | 6.5 | 5 | 6 | 59.3 | 30.0 | 30.0 | 30.0 | 5 | 13 | 109.5 | 83.0 | 5 | 13 | 32.0 | 33.0 | 5 | 7 | 6 | 6.5 | 64.1 | 114 | 126 | 138 | 6 | 6.5 | 50.0 | 53.0 | 5 | 11.5 | 5 | 9.5 | 12 |
| 6 FT | 10 | 10 | 9 | 9 | 5 | 7 | 5 | 6 | 56.6 | 30.0 | 30.0 | 30.0 | 5 | 12 | 55.0 | 61.0 | 5 | 12 | 30.0 | 31.0 | 5 | 7 | 6 | 6 | 57.8 | 114 | 126 | 138 | 6 | 6 | 48.0 | 52.0 | 5 | 12 | 5 | 9.5 | 12 |
| 8 FT | 10 | 11 | 9 | 9 | 5 | 7 | 6 | 7.5 | 55.5 | 30.0 | 30.0 | 34.0 | 6 | 15 | 53.0 | 56.0 | 6 | 15 | 32.0 | 33.0 | 5 | 6.5 | 6 | 6 | 55.6 | 115 | 127 | 139 | 6 | 6 | 47.0 | 52.0 | 5 | 12 | 5 | 9 | 0 |
| 10 FT | 11 | 12 | 9 | 9 | 5 | 7 | 6 | 7 | 53.5 | 31.0 | 35.0 | 35.0 | 6 | 15 | 51.0 | 55.0 | 6 | 15 | 32.0 | 33.0 | 5 | 6 | 6 | 6 | 53.8 | 116 | 128 | 140 | 6 | 6.5 | 46.0 | 52.0 | 5 | 12 | 5 | 8.5 | 0 |
| 12 FT | 12 | 13 | 9 | 9 | 5 | 7 | 6 | 6.5 | 51.9 | 32.0 | 36.0 | 36.0 | 6 | 15 | 49.0 | 54.0 | 6 | 15 | 31.0 | 33.0 | 5 | 6 | 6 | 6 | 52.4 | 117 | 129 | 141 | 6 | 6.5 | 46.0 | 52.0 | 5 | 12 | 5 | 8.5 | 0 |
| 14 FT | 13 | 14 | 9 | 9 | 5 | 6.5 | 6 | 6 | 50.5 | 33.0 | 37.0 | 37.0 | 6 | 15 | 48.0 | 53.0 | 6 | 15 | 31.0 | 33.0 | 6 | 8 | 6 | 6 | 51.3 | 118 | 130 | 142 | 6 | 6.5 | 45.0 | 52.0 | 5 | 12 | 5 | 8.5 | 0 |
| 16 FT | 14 | 15 | 10 | 9 | 5 | 6 | 6 | 7 | 49.9 | 34.0 | 34.0 | 38.0 | 6 | 15 | 47.0 | 53.0 | 6 | 15 | 31.0 | 33.0 | 6 | 7.5 | 6 | 7 | 50.4 | 119 | 131 | 143 | 6 | 6.5 | 45.0 | 52.0 | 5 | 12 | 5 | 8 | 0 |
| 18 FT | 15 | 16 | 10 | 9 | 6 | 8 | 6 | 7 | 54.9 | 35.0 | 35.0 | 39.0 | 6 | 15 | 52.0 | 59.0 | 6 | 15 | 37.0 | 39.0 | 6 | 7 | 6 | 7 | 49.6 | 120 | 132 | 144 | 6 | 6.5 | 45.0 | 53.0 | 5 | 12 | 5 | 8 | 0 |
| 20 FT | 16 | 17 | 11 | 9 | 6 | 8 | 6 | 7.5 | 54.8 | 36.0 | 36.0 | 40.0 | 6 | 14 | 52.0 | 58.0 | 6 | 14 | 36.0 | 39.0 | 6 | 7 | 6 | 8 | 49.3 | 121 | 133 | 145 | 6 | 6.5 | 45.0 | 53.0 | 5 | 12 | 5 | 7.5 | 0 |
| 22 FT | 17 | 18 | 12 | 9 | 6 | 7.5 | 6 | 8 | 54.8 | 37.0 | 37.0 | 37.0 | 6 | 14 | 51.0 | 58.0 | 6 | 14 | 36.0 | 39.0 | 6 | 6.5 | 5 | 6 | 45.9 | 122 | 134 | 146 | 6 | 6.5 | 45.0 | 53.0 | 5 | 12 | 5 | 7.5 | 0 |
| 24 FT | 18 | 20 | 12 | 9 | 6 | 7 | 6 | 7.5 | 54.4 | 38.0 | 38.0 | 38.0 | 6 | 13 | 51.0 | 58.0 | 6 | 13 | 36.0 | 38.0 | 6 | 6 | 5 | 6 | 45.8 | 124 | 136 | 148 | 6 | 6 | 45.0 | 53.0 | 5 | 12 | 5 | 7 | 0 |
| 26 FT | 19 | 21 | 12 | 9 | 6 | 6.5 | 6 | 7 | 53.9 | 39.0 | 39.0 | 43.0 | 6 | 13 | 50.0 | 58.0 | 6 | 13 | 35.0 | 38.0 | 6 | 6 | 6 | 8.5 | 48.4 | 125 | 137 | 149 | 7 | 7.5 | 48.0 | 56.0 | 5 | 12 | 5 | 7 | 0 |
| 28 FT | 20 | 22 | 13 | 9 | 6 | 6.5 | 6 | 7.5 | 54.3 | 40.0 | 40.0 | 40.0 | 6 | 12 | 50.0 | 58.0 | 6 | 12 | 35.0 | 37.0 | 6 | 6 | 5 | 6 | 45.4 | 126 | 138 | 150 | 7 | 7.5 | 48.0 | 57.0 | 5 | 12 | 5 | 6.5 | 0 |
| 30 FT | 21 | 23 | 13 | 9 | 6 | 6 | 6 | 7 | 54.1 | 41.0 | 41.0 | 41.0 | 6 | 12 | 50.0 | 57.0 | 6 | 12 | 34.0 | 36.0 | 7 | 8 | 5 | 6 | 45.4 | 127 | 139 | 151 | 7 | 7 | 48.0 | 57.0 | 5 | 12 | 5 | 6.5 | 0 |
| 32 FT | 22 | 24 | 13 | 9 | 6 | 6 | 6 | 6.5 | 54.1 | 42.0 | 42.0 | 46.0 | 7 | 15 | 54.0 | 62.0 | 7 | 15 | 39.0 | 41.0 | 7 | 7.5 | 6 | 8 | 48.4 | 128 | 140 | 152 | 7 | 7 | 48.0 | 57.0 | 5 | 12 | 5 | 6.5 | 0 |
| 34 FT | 23 | 25 | 14 | 9 | 7 | 7.5 | 6 | 7 | 54.8 | 43.0 | 43.0 | 43.0 | 7 | 15 | 54.0 | 62.0 | 7 | 15 | 38.0 | 40.0 | 7 | 7.5 | 5 | 6 | 45.8 | 129 | 141 | 153 | 7 | 6.5 | 48.0 | 57.0 | 5 | 12 | 5 | 6 | 0 |
| 36 FT | 23 | 25 | 14 | 9 | 7 | 7 | 6 | 7 | 53.3 | 43.0 | 43.0 | 43.0 | 7 | 14 | 54.0 | 62.0 | 7 | 14 | 38.0 | 40.0 | 7 | 7 | 5 | 6 | 44.1 | 129 | 141 | 153 | 7 | 6.5 | 48.0 | 57.0 | 5 | 12 | 5 | 6 | 0 |
| 38 FT | 24 | 26 | 14 | 9 | 7 | 7.5 | 6 | 7 | 53.4 | 44.0 | 44.0 | 44.0 | 7 | 14 | 54.0 | 61.0 | 7 | 14 | 38.0 | 40.0 | 7 | 7 | 5 | 6 | 44.3 | 130 | 142 | 154 | 7 | 6.5 | 48.0 | 57.0 | 5 | 12 | 5 | 6 | 0 |
| 40 FT | 25 | 27 | 14 | 9 | 7 | 7 | 6 | 6.5 | 53.4 | 45.0 | 45.0 | 45.0 | 7 | 14 | 54.0 | 61.0 | 7 | 14 | 37.0 | 39.0 | 7 | 7 | 5 | 6 | 44.5 | 131 | 143 | 155 | 7 | 6.5 | 48.0 | 57.0 | 5 | 12 | 5 | 6 | 0 |
| 42 FT | 26 | 28 | 15 | 9 | 7 | 7 | 6 | 7 | 54.3 | 46.0 | 50.0 | 50.0 | 7 | 13 | 54.0 | 60.0 | 7 | 13 | 37.0 | 38.0 | 7 | 7 | 6 | 8 | 48.0 | 132 | 144 | 156 | 7 | 6 | 48.0 | 57.0 | 5 | 12 | 6 | 8 | 0 |
| 44 FT | 27 | 29 | 15 | 9 | 7 | 6.5 | 6 | 6.5 | 54.3 | 51.0 | 51.0 | 51.0 | 7 | 13 | 53.0 | 60.0 | 7 | 13 | 36.0 | 38.0 | 7 | 7 | 6 | 8 | 48.1 | 133 | 145 | 157 | 7 | 6 | 48.0 | 57.0 | 5 | 12 | 6 | 8 | 0 |
| 46 FT | 27 | 30 | 15 | 9 | 7 | 6.5 | 6 | 6 | 54.4 | 51.0 | 51.0 | 51.0 | 7 | 13 | 53.0 | 60.0 | 7 | 13 | 37.0 | 38.0 | 7 | 7 | 6 | 8 | 48.1 | 134 | 146 | 158 | 7 | 6 | 48.0 | 57.0 | 5 | 12 | 6 | 8 | 0 |
| 48 FT | 28 | 30 | 16 | 9 | 7 | 6.5 | 6 | 6.5 | 55.0 | 52.0 | 52.0 | 52.0 | 7 | 13 | 53.0 | 59.0 | 7 | 13 | 36.0 | 37.0 | 7 | 6 | 6 | 7.5 | 48.5 | 134 | 146 | 158 | 7 | 6 | 48.0 | 57.0 | 5 | 12 | 6 | 8 | 0 |
| 50 FT | 29 | 31 | 16 | 9 | 7 | 6.5 | 6 | 6.5 | 55.1 | 53.0 | 53.0 | 53.0 | 7 | 13 | 53.0 | 59.0 | 7 | 13 | 36.0 | 37.0 | 7 | 6.5 | 6 | 7.5 | 48.8 | 135 | 147 | 159 | 7 | 6 | 48.0 | 57.0 | 5 | 12 | 6 | 8 | 0 |

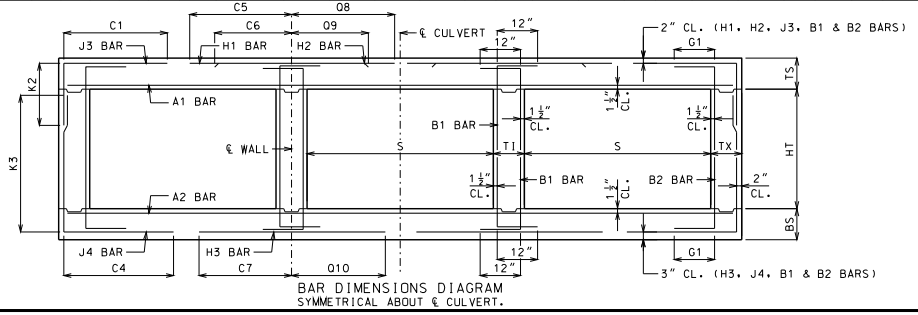


BAR DIMENSIONS DIAGRAM
SYMMETRICAL ABOUT ℄ CULVERT.

GENERAL NOTES:

IF DESIGN FILL IS BETWEEN TABULATED DESIGN FILLS, USE THE NEXT GREATER TABULATED DESIGN FILL, EXCEPT FOR DESIGN FILLS BETWEEN 2 FEET AND 4 FEET. FOR DESIGN FILLS BETWEEN 2 FEET AND 4 FEET USE THE GREATER MEMBER THICKNESS, AREA OF REINFORCEMENT AND BAR DIMENSIONS FROM THE 2 FEET AND 4 FEET TABULATED DESIGN FILLS. AREA OF REINFORCEMENT EQUALS BAR AREA PER FOOT SPACING.

SPECIAL DESIGNS ARE REQUIRED WHEN THE DESIGN FILL IS LESS THAN 1 FOOT OR GREATER THAN 50 FEET.

DIMENSIONS ARE IN INCHES UNLESS OTHERWISE SPECIFIED.

DESIGN FILLS ARE MEASURED FROM THE TOP OF TOP SLAB TO THE TOP OF EARTH FILL OR ROADWAY.

CULVERTS MEET STRENGTH AND SERVICEABILITY REQUIREMENTS FOR THE DESIGN VEHICULAR LIVE LOAD HL-93 MINUS THE LANE LOAD.


MISSOURI HIGHWAYS AND TRANSPORTATION COMMISSION
105 WEST CAPITOL
JEFFERSON CITY, MO 65102
1-888-ASK-MODOT (1-888-275-6636)


STATE OF MISSOURI — DENNIS W. HECKMANN — NUMBER PE-27141 — PROFESSIONAL ENGINEER
THIS SHEET HAS BEEN SIGNED, SEALED AND DATED ELECTRONICALLY.

# CONCRETE TRIPLE BOX CULVERT

MEMBER THICKNESS
BAR SIZE, SPACING & DIMENSIONS

SPAN (S): 11 FEET
HEIGHT (HT): 6 THRU 11 FEET

DATE EFFECTIVE: 12/01/2011
DATE PREPARED: 9/29/2011

703.87

SHEET NO. 16 OF 27

IF A SEAL IS PRESENT ON THIS SHEET IT HAS BEEN ELECTRONICALLY SEALED AND DATED.

SPAN (S) = 11 FT  HEIGHT (HT) = 12 FT OR 13 FT OR 14 FT

| DESIGN FILL | MEMBER THICKNESS | | | | TOP SLAB BARS | | | | | | | | | | | | | | | | BOTTOM SLAB BARS | | | | | | | | | | | | | | WALL BARS | | | | |
|---|---|---|---|---|---|---|---|---|---|---|---|---|---|---|---|---|---|---|---|---|---|---|---|---|---|---|---|---|---|---|---|---|---|---|---|---|---|---|---|
| | | | | | A1 BARS | | J3 BARS | | | K2 | | | H1 BARS | | | | H2 BARS | | | | A2 BARS | | J4 BARS | | | K3 | | | H3 BARS | | | | B1 BARS | | B2 BARS | | |
| | TS | BS | TX | TI | SIZE | SPA. | SIZE | SPA. | C1 | HT=12' | HT=13' | HT=14' | SIZE | SPA. | C5 | Q8 | SIZE | SPA. | C6 | Q9 | SIZE | SPA. | SIZE | SPA. | C4 | HT=12' | HT=13' | HT=14' | SIZE | SPA. | C7 | Q10 | SIZE | SPA. | SIZE | SPA. | G1 |
| 1 FT | 13 | 10 | 10 | 11 | 5 | 6.5 | 5 | 6 | 60.3 | 33.0 | 33.0 | 33.0 | 5 | 13 | 110.5 | 82.5 | 5 | 13 | 31.0 | 33.0 | 5 | 7.5 | 6 | 6 | 89.3 | 150 | 162 | 174 | 5 | 6 | 51.0 | 51.0 | 5 | 10 | 5 | 8 | 12 |
| 2 FT | 14 | 11 | 10 | 11 | 5 | 6 | 5 | 6 | 60.3 | 34.0 | 34.0 | 34.0 | 5 | 14 | 110.5 | 82.5 | 5 | 14 | 30.0 | 32.0 | 5 | 7.5 | 6 | 6 | 89.3 | 151 | 163 | 175 | 5 | 6 | 50.0 | 51.0 | 5 | 12 | 5 | 8 | 12 |
| 4 FT | 10 | 11 | 11 | 11 | 5 | 7 | 5 | 6 | 60.9 | 30.0 | 30.0 | 30.0 | 5 | 13 | 110.5 | 80.0 | 5 | 13 | 33.0 | 33.0 | 5 | 7 | 6 | 6.5 | 85.9 | 151 | 163 | 175 | 5 | 6 | 49.0 | 51.0 | 5 | 12 | 5 | 7.5 | 12 |
| 6 FT | 10 | 11 | 11 | 11 | 5 | 7.5 | 5 | 6 | 79.0 | 30.0 | 30.0 | 30.0 | 5 | 12 | 58.0 | 57.0 | 5 | 12 | 31.0 | 31.0 | 5 | 6.5 | 6 | 6 | 77.5 | 151 | 163 | 175 | 6 | 6.5 | 50.0 | 53.0 | 5 | 12 | 5 | 7.5 | 12 |
| 8 FT | 10 | 11 | 12 | 11 | 5 | 7.5 | 6 | 7.5 | 70.1 | 30.0 | 30.0 | 34.0 | 6 | 15 | 54.0 | 55.0 | 6 | 15 | 33.0 | 33.0 | 5 | 6.5 | 6 | 6 | 70.9 | 151 | 163 | 175 | 6 | 6 | 48.0 | 52.0 | 5 | 12 | 5 | 7 | 0 |
| 10 FT | 11 | 12 | 12 | 11 | 5 | 7.5 | 6 | 8 | 68.5 | 31.0 | 31.0 | 35.0 | 6 | 16 | 52.0 | 54.0 | 6 | 16 | 32.0 | 33.0 | 5 | 6 | 6 | 6 | 69.9 | 152 | 164 | 176 | 6 | 6 | 47.0 | 52.0 | 5 | 12 | 5 | 7 | 0 |
| 12 FT | 12 | 13 | 12 | 11 | 5 | 7 | 6 | 8 | 67.4 | 32.0 | 32.0 | 36.0 | 6 | 16 | 50.0 | 53.0 | 6 | 16 | 32.0 | 33.0 | 5 | 6 | 6 | 6.5 | 69.0 | 153 | 165 | 177 | 6 | 6 | 47.0 | 52.0 | 5 | 12 | 5 | 7 | 0 |
| 14 FT | 13 | 14 | 12 | 11 | 5 | 6.5 | 6 | 7 | 66.4 | 33.0 | 37.0 | 37.0 | 6 | 16 | 49.0 | 53.0 | 6 | 16 | 32.0 | 33.0 | 6 | 8 | 6 | 6.5 | 68.3 | 154 | 166 | 178 | 6 | 6.5 | 47.0 | 52.0 | 5 | 12 | 5 | 6.5 | 0 |
| 16 FT | 14 | 15 | 13 | 11 | 5 | 6 | 6 | 7 | 64.9 | 34.0 | 38.0 | 38.0 | 6 | 15 | 48.0 | 52.0 | 6 | 15 | 32.0 | 33.0 | 6 | 7.5 | 6 | 7 | 66.6 | 155 | 167 | 179 | 6 | 6.5 | 47.0 | 52.0 | 5 | 12 | 5 | 6.5 | 0 |
| 18 FT | 15 | 16 | 13 | 11 | 6 | 8 | 6 | 6.5 | 70.3 | 39.0 | 39.0 | 39.0 | 6 | 15 | 54.0 | 58.0 | 6 | 15 | 37.0 | 39.0 | 6 | 7 | 6 | 6 | 66.0 | 156 | 168 | 180 | 6 | 6.5 | 47.0 | 52.0 | 5 | 12 | 5 | 6.5 | 0 |
| 20 FT | 15 | 17 | 14 | 11 | 6 | 8 | 6 | 6.5 | 68.4 | 39.0 | 39.0 | 39.0 | 6 | 14 | 53.0 | 58.0 | 6 | 14 | 37.0 | 39.0 | 6 | 7 | 6 | 6.5 | 65.1 | 157 | 169 | 181 | 6 | 6.5 | 46.0 | 53.0 | 5 | 12 | 5 | 6 | 0 |
| 22 FT | 17 | 18 | 14 | 11 | 6 | 7.5 | 6 | 6.5 | 69.0 | 41.0 | 41.0 | 41.0 | 6 | 14 | 53.0 | 58.0 | 6 | 14 | 37.0 | 39.0 | 6 | 6 | 6 | 6 | 64.5 | 158 | 170 | 182 | 6 | 6 | 46.0 | 53.0 | 5 | 12 | 5 | 6 | 0 |
| 24 FT | 18 | 20 | 15 | 11 | 6 | 7 | 6 | 6.5 | 68.9 | 42.0 | 42.0 | 42.0 | 6 | 13 | 52.0 | 58.0 | 6 | 13 | 36.0 | 38.0 | 6 | 6 | 6 | 6 | 64.6 | 160 | 172 | 184 | 6 | 6 | 46.0 | 53.0 | 5 | 12 | 6 | 8 | 0 |
| 26 FT | 19 | 21 | 15 | 11 | 6 | 6.5 | 6 | 6 | 68.6 | 43.0 | 43.0 | 43.0 | 6 | 13 | 52.0 | 57.0 | 6 | 13 | 36.0 | 38.0 | 6 | 6 | 6 | 6 | 64.3 | 161 | 173 | 185 | 7 | 7.5 | 49.0 | 56.0 | 5 | 12 | 6 | 8 | 0 |
| 28 FT | 20 | 22 | 16 | 11 | 6 | 6.5 | 6 | 6 | 68.6 | 44.0 | 44.0 | 44.0 | 6 | 12 | 51.0 | 57.0 | 6 | 12 | 35.0 | 37.0 | 6 | 6 | 6 | 6 | 63.9 | 162 | 174 | 186 | 7 | 7.5 | 49.0 | 56.0 | 5 | 12 | 6 | 8 | 0 |
| 30 FT | 21 | 23 | 17 | 11 | 6 | 6 | 6 | 6 | 69.0 | 45.0 | 45.0 | 45.0 | 6 | 12 | 51.0 | 57.0 | 6 | 12 | 34.0 | 36.0 | 7 | 8 | 6 | 6.5 | 64.0 | 163 | 175 | 187 | 7 | 7 | 49.0 | 57.0 | 5 | 12 | 6 | 7.5 | 0 |
| 32 FT | 21 | 24 | 17 | 11 | 6 | 6 | 6 | 6 | 68.6 | 45.0 | 45.0 | 45.0 | 6 | 12 | 51.0 | 57.0 | 6 | 12 | 35.0 | 37.0 | 7 | 7.5 | 6 | 6.5 | 64.1 | 164 | 176 | 188 | 7 | 7 | 49.0 | 57.0 | 5 | 12 | 6 | 7.5 | 0 |
| 34 FT | 22 | 25 | 18 | 11 | 6 | 6 | 6 | 6 | 69.1 | 46.0 | 46.0 | 46.0 | 7 | 15 | 55.0 | 62.0 | 7 | 15 | 40.0 | 41.0 | 7 | 7.5 | 6 | 6.5 | 64.4 | 165 | 177 | 189 | 7 | 6.5 | 49.0 | 57.0 | 5 | 12 | 6 | 7 | 0 |
| 36 FT | 23 | 26 | 18 | 11 | 7 | 7.5 | 7 | 7.5 | 74.3 | 47.0 | 47.0 | 47.0 | 7 | 15 | 55.0 | 61.0 | 7 | 15 | 39.0 | 41.0 | 7 | 7.5 | 6 | 6 | 64.5 | 166 | 178 | 190 | 7 | 6.5 | 49.0 | 57.0 | 5 | 12 | 6 | 7 | 0 |
| 38 FT | 24 | 26 | 18 | 11 | 7 | 7.5 | 7 | 8 | 72.6 | 48.0 | 48.0 | 48.0 | 7 | 14 | 55.0 | 61.0 | 7 | 14 | 38.0 | 40.0 | 7 | 7 | 6 | 6.5 | 62.4 | 166 | 178 | 190 | 7 | 6.5 | 49.0 | 57.0 | 5 | 12 | 6 | 7 | 0 |
| 40 FT | 25 | 27 | 18 | 11 | 7 | 7 | 7 | 7 | 72.9 | 49.0 | 49.0 | 49.0 | 7 | 14 | 55.0 | 61.0 | 7 | 14 | 38.0 | 39.0 | 7 | 7 | 6 | 6 | 62.6 | 167 | 179 | 191 | 7 | 6.5 | 49.0 | 57.0 | 5 | 12 | 6 | 7 | 0 |
| 42 FT | 25 | 28 | 19 | 11 | 7 | 7 | 7 | 7 | 73.3 | 49.0 | 49.0 | 49.0 | 7 | 14 | 55.0 | 60.0 | 7 | 14 | 38.0 | 40.0 | 7 | 7 | 6 | 6 | 62.9 | 168 | 180 | 192 | 7 | 6.5 | 49.0 | 57.0 | 5 | 12 | 6 | 6.5 | 0 |
| 44 FT | 26 | 29 | 20 | 11 | 7 | 7 | 7 | 7.5 | 74.0 | 50.0 | 50.0 | 50.0 | 7 | 13 | 54.0 | 60.0 | 7 | 13 | 38.0 | 39.0 | 7 | 7 | 6 | 6 | 63.3 | 169 | 181 | 193 | 7 | 6 | 49.0 | 57.0 | 5 | 12 | 6 | 6.5 | 0 |
| 46 FT | 27 | 30 | 21 | 11 | 7 | 6.5 | 7 | 7.5 | 74.6 | 51.0 | 51.0 | 51.0 | 7 | 13 | 54.0 | 59.0 | 7 | 13 | 37.0 | 38.0 | 7 | 7 | 6 | 6 | 63.6 | 170 | 182 | 194 | 7 | 6 | 49.0 | 57.0 | 5 | 12 | 6 | 6 | 0 |
| 48 FT | 27 | 30 | 21 | 11 | 7 | 6 | 7 | 7 | 74.5 | 51.0 | 51.0 | 51.0 | 7 | 12 | 54.0 | 59.0 | 7 | 12 | 37.0 | 39.0 | 7 | 6 | 6 | 6 | 63.5 | 170 | 182 | 194 | 7 | 6 | 49.0 | 57.0 | 5 | 12 | 6 | 6 | 0 |
| 50 FT | 28 | 31 | 22 | 11 | 7 | 6.5 | 7 | 7 | 75.3 | 52.0 | 52.0 | 58.0 | 7 | 13 | 54.0 | 59.0 | 7 | 13 | 37.0 | 38.0 | 7 | 6.5 | 7 | 7.5 | 67.0 | 171 | 183 | 195 | 7 | 6 | 49.0 | 58.0 | 5 | 12 | 6 | 6 | 0 |

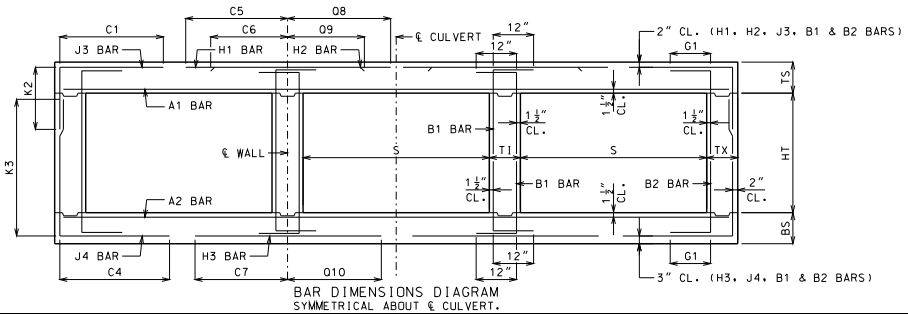


BAR DIMENSIONS DIAGRAM
SYMMETRICAL ABOUT ℄ CULVERT.

GENERAL NOTES:

IF DESIGN FILL IS BETWEEN TABULATED DESIGN FILLS, USE THE NEXT GREATER TABULATED DESIGN FILL, EXCEPT FOR DESIGN FILLS BETWEEN 2 FEET AND 4 FEET. FOR DESIGN FILLS BETWEEN 2 FEET AND 4 FEET USE THE GREATER MEMBER THICKNESS, AREA OF REINFORCEMENT AND BAR DIMENSIONS FROM THE 2 FEET AND 4 FEET TABULATED DESIGN FILLS. AREA OF REINFORCEMENT EQUALS BAR AREA PER FOOT SPACING.

SPECIAL DESIGNS ARE REQUIRED WHEN THE DESIGN FILL IS LESS THAN 1 FOOT OR GREATER THAN 50 FEET.

DIMENSIONS ARE IN INCHES UNLESS OTHERWISE SPECIFIED.

DESIGN FILLS ARE MEASURED FROM THE TOP OF TOP SLAB TO THE TOP OF EARTH FILL OR ROADWAY.

CULVERTS MEET STRENGTH AND SERVICEABILITY REQUIREMENTS FOR THE DESIGN VEHICULAR LIVE LOAD HL-93 MINUS THE LANE LOAD.


MISSOURI HIGHWAYS AND TRANSPORTATION COMMISSION
105 WEST CAPITOL
JEFFERSON CITY, MO 65102
1-888-ASK-MODOT (1-888-275-6636)


STATE OF MISSOURI
DENNIS W. HECKMAN
NUMBER PE-27141
PROFESSIONAL ENGINEER
THIS SHEET HAS BEEN SIGNED, SEALED AND DATED ELECTRONICALLY.

# CONCRETE TRIPLE BOX CULVERT

MEMBER THICKNESS
BAR SIZE, SPACING & DIMENSIONS

SPAN (S): 11 FEET
HEIGHT (HT): 12 THRU 14 FEET

DATE EFFECTIVE: 12/01/2011
DATE PREPARED: 9/29/2011

703.87

SHEET NO.
17 OF 27

IF A SEAL IS PRESENT ON THIS SHEET IT HAS BEEN ELECTRONICALLY SEALED AND DATED.

SPAN (S) = 12 FT  HEIGHT (HT) = 6 FT OR 7 FT OR 8 FT

| DESIGN FILL | MEMBER THICKNESS | | | | TOP SLAB BARS | | | | | | | | | | | | | | BOTTOM SLAB BARS | | | | | | | | | | | | WALL BARS | | | | |
|---|---|---|---|---|---|---|---|---|---|---|---|---|---|---|---|---|---|---|---|---|---|---|---|---|---|---|---|---|---|---|---|---|---|---|
| | | | | | A1 BARS | | J3 BARS | | | K2 | | | H1 BARS | | | | H2 BARS | | | | A2 BARS | | J4 BARS | | | K3 | | | H3 BARS | | | | B1 BARS | | B2 BARS | | |
| | TS | BS | TX | TI | SIZE | SPA. | SIZE | SPA. | C1 | HT=6′ | HT=7′ | HT=8′ | SIZE | SPA. | C5 | Q8 | SIZE | SPA. | C6 | Q9 | SIZE | SPA. | SIZE | SPA. | C4 | HT=6′ | HT=7′ | HT=8′ | SIZE | SPA. | C7 | Q10 | SIZE | SPA. | SIZE | SPA. | G1 |
| 1 FT | 14 | 9 | 8 | 8 | 5 | 6 | 4 | 6 | 59.1 | 30.0 | 30.0 | 30.0 | 5 | 12 | 114.5 | 86.5 | 5 | 12 | 31.0 | 34.0 | 5 | 7.5 | 6 | 7 | 54.6 | 77 | 89 | 101 | 6 | 6.5 | 53.0 | 56.0 | 5 | 12 | 5 | 12 | 12 |
| 2 FT | 14 | 9 | 8 | 8 | 5 | 6 | 5 | 8.5 | 62.1 | 30.0 | 30.0 | 34.0 | 5 | 12 | 116.5 | 86.5 | 5 | 12 | 30.0 | 33.0 | 5 | 7.5 | 6 | 6.5 | 50.3 | 77 | 89 | 101 | 6 | 6 | 52.0 | 55.0 | 5 | 12 | 5 | 12 | 12 |
| 4 FT | 11 | 10 | 8 | 8 | 5 | 6 | 5 | 6.5 | 48.9 | 31.0 | 31.0 | 31.0 | 5 | 12 | 69.0 | 88.0 | 5 | 12 | 33.0 | 35.0 | 5 | 7 | 5 | 6 | 42.6 | 78 | 90 | 102 | 6 | 6 | 51.0 | 56.0 | 5 | 12 | 5 | 12 | 12 |
| 6 FT | 11 | 11 | 8 | 8 | 5 | 6.5 | 5 | 6.5 | 42.8 | 31.0 | 31.0 | 31.0 | 6 | 16 | 59.0 | 71.0 | 6 | 16 | 34.0 | 36.0 | 5 | 6.5 | 5 | 6.5 | 39.3 | 79 | 91 | 103 | 6 | 6.5 | 49.0 | 56.0 | 5 | 12 | 5 | 12 | 12 |
| 8 FT | 11 | 12 | 8 | 8 | 5 | 6.5 | 5 | 6 | 39.9 | 31.0 | 31.0 | 31.0 | 6 | 14 | 55.0 | 61.0 | 6 | 14 | 33.0 | 34.0 | 5 | 6 | 5 | 7.5 | 36.6 | 80 | 92 | 104 | 6 | 6.5 | 48.0 | 56.0 | 5 | 12 | 5 | 12 | 0 |
| 10 FT | 12 | 13 | 8 | 8 | 5 | 6.5 | 5 | 6.5 | 37.3 | 32.0 | 32.0 | 32.0 | 6 | 14 | 52.0 | 59.0 | 6 | 14 | 32.0 | 34.0 | 5 | 6 | 5 | 7.5 | 34.9 | 81 | 93 | 105 | 6 | 6 | 47.0 | 56.0 | 5 | 12 | 5 | 12 | 0 |
| 12 FT | 13 | 14 | 8 | 8 | 5 | 6 | 5 | 7 | 35.4 | 33.0 | 33.0 | 33.0 | 6 | 14 | 51.0 | 58.0 | 6 | 14 | 32.0 | 34.0 | 6 | 8 | 5 | 8 | 33.8 | 82 | 94 | 106 | 6 | 6 | 47.0 | 56.0 | 5 | 12 | 5 | 12 | 0 |
| 14 FT | 14 | 15 | 8 | 8 | 5 | 6 | 5 | 7 | 33.9 | 34.0 | 34.0 | 34.0 | 6 | 13 | 49.0 | 57.0 | 6 | 13 | 32.0 | 34.0 | 6 | 7.5 | 5 | 8 | 32.8 | 83 | 95 | 107 | 6 | 6 | 47.0 | 56.0 | 5 | 12 | 5 | 12 | 0 |
| 16 FT | 15 | 16 | 8 | 8 | 6 | 8 | 5 | 6.5 | 37.9 | 35.0 | 35.0 | 35.0 | 6 | 13 | 55.0 | 63.0 | 6 | 13 | 37.0 | 40.0 | 6 | 7 | 5 | 8 | 32.1 | 84 | 96 | 108 | 6 | 6 | 46.0 | 56.0 | 5 | 12 | 5 | 12 | 0 |
| 18 FT | 16 | 17 | 8 | 8 | 6 | 8 | 5 | 6.5 | 37.0 | 36.0 | 36.0 | 36.0 | 6 | 13 | 54.0 | 63.0 | 6 | 13 | 37.0 | 40.0 | 6 | 7 | 5 | 7 | 31.6 | 85 | 97 | 109 | 6 | 6 | 46.0 | 56.0 | 5 | 12 | 5 | 11.5 | 0 |
| 20 FT | 17 | 18 | 8 | 8 | 6 | 7.5 | 5 | 6.5 | 36.4 | 37.0 | 37.0 | 37.0 | 6 | 12 | 53.0 | 63.0 | 6 | 12 | 37.0 | 40.0 | 6 | 6.5 | 5 | 6.5 | 31.1 | 86 | 98 | 110 | 6 | 6 | 46.0 | 56.0 | 5 | 12 | 5 | 10 | 0 |
| 22 FT | 18 | 20 | 8 | 8 | 6 | 6.5 | 5 | 6 | 36.1 | 38.0 | 38.0 | 38.0 | 6 | 12 | 53.0 | 62.0 | 6 | 12 | 37.0 | 40.0 | 6 | 6 | 5 | 6 | 30.8 | 88 | 100 | 112 | 6 | 6 | 46.0 | 57.0 | 5 | 12 | 5 | 9.5 | 0 |
| 24 FT | 20 | 21 | 8 | 8 | 6 | 6.5 | 6 | 7.5 | 39.5 | 44.0 | 44.0 | 44.0 | 6 | 12 | 52.0 | 62.0 | 6 | 12 | 36.0 | 39.0 | 7 | 8 | 6 | 7.5 | 33.8 | 89 | 101 | 113 | 7 | 7.5 | 49.0 | 59.0 | 5 | 12 | 5 | 9.5 | 0 |
| 26 FT | 21 | 22 | 8 | 8 | 6 | 6 | 6 | 7 | 39.3 | 45.0 | 45.0 | 45.0 | 6 | 12 | 52.0 | 62.0 | 6 | 12 | 36.0 | 39.0 | 7 | 7.5 | 6 | 7 | 33.6 | 90 | 102 | 114 | 7 | 7.5 | 49.0 | 60.0 | 5 | 12 | 5 | 9.5 | 0 |
| 28 FT | 22 | 23 | 8 | 8 | 6 | 6 | 6 | 6.5 | 39.0 | 46.0 | 46.0 | 46.0 | 7 | 15 | 57.0 | 67.0 | 7 | 15 | 41.0 | 44.0 | 7 | 7 | 6 | 6.5 | 33.4 | 91 | 103 | 115 | 7 | 7 | 49.0 | 60.0 | 5 | 12 | 5 | 8.5 | 0 |
| 30 FT | 23 | 24 | 8 | 8 | 7 | 7.5 | 6 | 6 | 38.9 | 47.0 | 47.0 | 47.0 | 7 | 15 | 56.0 | 67.0 | 7 | 15 | 40.0 | 43.0 | 7 | 6.5 | 6 | 6 | 33.4 | 92 | 104 | 116 | 7 | 6.5 | 49.0 | 60.0 | 5 | 12 | 5 | 8 | 0 |
| 32 FT | 24 | 25 | 9 | 8 | 7 | 7.5 | 6 | 7 | 39.8 | 48.0 | 48.0 | 48.0 | 7 | 14 | 56.0 | 66.0 | 7 | 14 | 40.0 | 42.0 | 7 | 6.5 | 6 | 7 | 34.0 | 93 | 105 | 117 | 7 | 6.5 | 49.0 | 60.0 | 5 | 12 | 5 | 8.5 | 0 |
| 34 FT | 25 | 26 | 9 | 8 | 7 | 7 | 6 | 6.5 | 39.8 | 49.0 | 49.0 | 49.0 | 7 | 14 | 56.0 | 66.0 | 7 | 14 | 39.0 | 42.0 | 7 | 6 | 6 | 6.5 | 34.0 | 94 | 106 | 118 | 7 | 6 | 49.0 | 60.0 | 5 | 12 | 5 | 8 | 0 |
| 36 FT | 26 | 27 | 9 | 8 | 7 | 7 | 6 | 6.5 | 39.8 | 50.0 | 50.0 | 50.0 | 7 | 13 | 56.0 | 66.0 | 7 | 13 | 39.0 | 41.0 | 7 | 6 | 6 | 6.5 | 34.1 | 95 | 107 | 119 | 7 | 6 | 49.0 | 60.0 | 5 | 12 | 5 | 7.5 | 0 |
| 38 FT | 27 | 28 | 9 | 8 | 7 | 6.5 | 6 | 6 | 39.8 | 51.0 | 51.0 | 51.0 | 7 | 13 | 56.0 | 66.0 | 7 | 13 | 38.0 | 40.0 | 7 | 6 | 6 | 6 | 34.3 | 96 | 108 | 120 | 7 | 6 | 49.0 | 60.0 | 5 | 12 | 5 | 7 | 0 |
| 40 FT | 28 | 29 | 9 | 8 | 7 | 6.5 | 6 | 6 | 38.9 | 52.0 | 52.0 | 52.0 | 7 | 12 | 56.0 | 65.0 | 7 | 12 | 37.0 | 39.0 | 7 | 6.5 | 6 | 6 | 33.4 | 97 | 109 | 121 | 8 | 7.5 | 55.0 | 66.0 | 5 | 12 | 5 | 7 | 0 |
| 42 FT | 28 | 30 | 10 | 8 | 7 | 6 | 6 | 6.5 | 39.8 | 52.0 | 52.0 | 52.0 | 7 | 12 | 56.0 | 65.0 | 7 | 12 | 38.0 | 40.0 | 7 | 6.5 | 6 | 6.5 | 33.9 | 98 | 110 | 122 | 8 | 7.5 | 55.0 | 66.0 | 5 | 12 | 5 | 8 | 0 |
| 44 FT | 29 | 31 | 10 | 8 | 7 | 6 | 6 | 6.5 | 39.9 | 53.0 | 53.0 | 53.0 | 7 | 12 | 55.0 | 64.0 | 7 | 12 | 38.0 | 39.0 | 7 | 6.5 | 6 | 6 | 34.0 | 99 | 111 | 123 | 8 | 7.5 | 55.0 | 66.0 | 5 | 12 | 5 | 7 | 0 |
| 46 FT | 30 | 32 | 10 | 8 | 7 | 6 | 6 | 6 | 40.0 | 54.0 | 54.0 | 54.0 | 7 | 12 | 55.0 | 64.0 | 7 | 12 | 37.0 | 38.0 | 7 | 6 | 6 | 6 | 34.3 | 100 | 112 | 124 | 8 | 7.5 | 55.0 | 66.0 | 5 | 12 | 5 | 6.5 | 0 |
| 48 FT | 31 | 33 | 10 | 8 | 8 | 7.5 | 6 | 6 | 40.1 | 55.0 | 55.0 | 55.0 | 8 | 15 | 63.0 | 71.0 | 8 | 15 | 45.0 | 46.0 | 7 | 6 | 7 | 6.5 | 37.5 | 101 | 113 | 125 | 8 | 7.5 | 55.0 | 66.0 | 5 | 12 | 5 | 6.5 | 0 |
| 50 FT | 32 | 34 | 11 | 8 | 8 | 7.5 | 6 | 6.5 | 41.0 | 56.0 | 56.0 | 56.0 | 7 | 12 | 55.0 | 63.0 | 7 | 12 | 37.0 | 38.0 | 7 | 6 | 6 | 6 | 35.1 | 102 | 114 | 126 | 8 | 7 | 55.0 | 66.0 | 5 | 12 | 5 | 7 | 0 |

SPAN (S) = 12 FT  HEIGHT (HT) = 9 FT OR 10 FT OR 11 FT

| DESIGN FILL | MEMBER THICKNESS | | | | TOP SLAB BARS | | | | | | | | | | | | | | BOTTOM SLAB BARS | | | | | | | | | | | | WALL BARS | | | | |
|---|---|---|---|---|---|---|---|---|---|---|---|---|---|---|---|---|---|---|---|---|---|---|---|---|---|---|---|---|---|---|---|---|---|---|
| | | | | | A1 BARS | | J3 BARS | | | K2 | | | H1 BARS | | | | H2 BARS | | | | A2 BARS | | J4 BARS | | | K3 | | | H3 BARS | | | | B1 BARS | | B2 BARS | | |
| | TS | BS | TX | TI | SIZE | SPA. | SIZE | SPA. | C1 | HT=9′ | HT=10′ | HT=11′ | SIZE | SPA. | C5 | Q8 | SIZE | SPA. | C6 | Q9 | SIZE | SPA. | SIZE | SPA. | C4 | HT=9′ | HT=10′ | HT=11′ | SIZE | SPA. | C7 | Q10 | SIZE | SPA. | SIZE | SPA. | G1 |
| 1 FT | 14 | 10 | 8 | 9 | 5 | 6 | 5 | 7.5 | 62.3 | 34.0 | 34.0 | 34.0 | 5 | 12 | 117.5 | 87.5 | 5 | 12 | 31.0 | 35.0 | 5 | 7.5 | 6 | 6 | 79.4 | 114 | 126 | 138 | 5 | 6 | 51.0 | 54.0 | 5 | 12 | 5 | 10 | 12 |
| 2 FT | 14 | 10 | 9 | 9 | 5 | 6 | 5 | 8 | 62.9 | 34.0 | 34.0 | 34.0 | 5 | 12 | 117.5 | 87.5 | 5 | 12 | 30.0 | 33.0 | 5 | 7 | 6 | 6.5 | 68.6 | 114 | 126 | 138 | 6 | 6.5 | 53.0 | 56.0 | 5 | 12 | 5 | 10.5 | 12 |
| 4 FT | 11 | 10 | 9 | 9 | 5 | 6 | 6 | 7 | 75.1 | 31.0 | 31.0 | 35.0 | 5 | 12 | 82.0 | 89.0 | 5 | 12 | 34.0 | 36.0 | 5 | 7 | 6 | 6 | 61.3 | 114 | 126 | 138 | 6 | 6 | 52.0 | 56.0 | 5 | 12 | 5 | 10 | 12 |
| 6 FT | 11 | 11 | 9 | 9 | 5 | 6.5 | 6 | 7 | 59.8 | 31.0 | 35.0 | 35.0 | 6 | 16 | 61.0 | 70.0 | 6 | 16 | 35.0 | 36.0 | 5 | 6.5 | 6 | 6 | 57.5 | 115 | 127 | 139 | 6 | 6 | 50.0 | 56.0 | 5 | 12 | 5 | 9.5 | 12 |
| 8 FT | 11 | 12 | 9 | 9 | 5 | 6.5 | 6 | 7 | 55.3 | 31.0 | 31.0 | 35.0 | 6 | 15 | 56.0 | 60.0 | 6 | 15 | 33.0 | 34.0 | 5 | 6 | 6 | 6.5 | 54.5 | 116 | 128 | 140 | 6 | 6 | 49.0 | 56.0 | 5 | 12 | 5 | 9 | 0 |
| 10 FT | 12 | 13 | 9 | 9 | 5 | 6.5 | 6 | 6.5 | 52.5 | 32.0 | 32.0 | 36.0 | 6 | 14 | 54.0 | 59.0 | 6 | 14 | 33.0 | 34.0 | 5 | 6 | 6 | 6.5 | 52.4 | 117 | 129 | 141 | 6 | 6 | 48.0 | 56.0 | 5 | 12 | 5 | 8.5 | 0 |
| 12 FT | 13 | 14 | 9 | 9 | 5 | 6 | 6 | 6.5 | 50.4 | 33.0 | 33.0 | 37.0 | 6 | 14 | 52.0 | 58.0 | 6 | 14 | 32.0 | 34.0 | 6 | 8 | 6 | 6.5 | 50.6 | 118 | 130 | 142 | 6 | 6 | 48.0 | 56.0 | 5 | 12 | 5 | 8.5 | 0 |
| 14 FT | 14 | 15 | 9 | 9 | 5 | 6 | 6 | 6.5 | 48.8 | 34.0 | 34.0 | 38.0 | 6 | 14 | 51.0 | 57.0 | 6 | 14 | 32.0 | 34.0 | 6 | 7.5 | 6 | 6.5 | 49.4 | 119 | 131 | 143 | 6 | 6 | 48.0 | 56.0 | 5 | 12 | 5 | 8.5 | 0 |
| 16 FT | 15 | 16 | 10 | 9 | 6 | 8 | 6 | 7.5 | 54.3 | 35.0 | 35.0 | 39.0 | 6 | 13 | 55.0 | 63.0 | 6 | 13 | 38.0 | 40.0 | 6 | 7 | 6 | 7.5 | 48.5 | 120 | 132 | 144 | 6 | 6 | 47.0 | 56.0 | 5 | 12 | 5 | 8 | 0 |
| 18 FT | 16 | 17 | 11 | 9 | 6 | 8 | 6 | 8 | 54.3 | 36.0 | 36.0 | 36.0 | 6 | 13 | 55.0 | 62.0 | 6 | 13 | 38.0 | 40.0 | 6 | 7 | 5 | 6 | 45.4 | 121 | 133 | 145 | 6 | 6 | 47.0 | 56.0 | 5 | 12 | 5 | 8 | 0 |
| 20 FT | 17 | 18 | 11 | 9 | 6 | 7.5 | 6 | 7.5 | 53.6 | 37.0 | 37.0 | 41.0 | 6 | 13 | 54.0 | 62.0 | 6 | 13 | 37.0 | 40.0 | 6 | 6 | 6 | 8 | 47.8 | 122 | 134 | 146 | 6 | 6 | 47.0 | 56.0 | 5 | 12 | 5 | 7.5 | 0 |
| 22 FT | 18 | 20 | 11 | 9 | 6 | 7 | 6 | 6.5 | 53.3 | 38.0 | 38.0 | 42.0 | 6 | 12 | 54.0 | 62.0 | 6 | 12 | 37.0 | 40.0 | 6 | 6 | 6 | 7.5 | 47.5 | 124 | 136 | 148 | 6 | 6 | 47.0 | 57.0 | 5 | 12 | 5 | 7.5 | 0 |
| 24 FT | 19 | 21 | 12 | 9 | 6 | 6.5 | 6 | 7 | 53.5 | 39.0 | 39.0 | 39.0 | 6 | 12 | 53.0 | 62.0 | 6 | 12 | 37.0 | 40.0 | 7 | 8 | 5 | 6 | 44.5 | 125 | 137 | 149 | 7 | 7.5 | 50.0 | 60.0 | 5 | 12 | 5 | 7 | 0 |
| 26 FT | 20 | 22 | 13 | 9 | 6 | 6 | 6 | 7.5 | 53.9 | 40.0 | 40.0 | 40.0 | 6 | 12 | 53.0 | 61.0 | 6 | 12 | 37.0 | 40.0 | 7 | 7.5 | 5 | 6 | 44.6 | 126 | 138 | 150 | 7 | 7.5 | 50.0 | 60.0 | 5 | 12 | 5 | 7 | 0 |
| 28 FT | 22 | 23 | 13 | 9 | 6 | 6 | 6 | 7.5 | 53.5 | 42.0 | 42.0 | 42.0 | 7 | 15 | 57.0 | 66.0 | 7 | 15 | 40.0 | 43.0 | 7 | 7 | 5 | 6 | 44.5 | 127 | 139 | 151 | 7 | 7 | 50.0 | 60.0 | 5 | 12 | 5 | 6.5 | 0 |
| 30 FT | 23 | 25 | 13 | 9 | 7 | 7.5 | 6 | 7 | 53.4 | 43.0 | 43.0 | 43.0 | 7 | 15 | 57.0 | 66.0 | 7 | 15 | 40.0 | 42.0 | 7 | 7 | 5 | 6 | 44.4 | 129 | 141 | 153 | 7 | 6.5 | 50.0 | 60.0 | 5 | 12 | 5 | 6.5 | 0 |
| 32 FT | 24 | 26 | 13 | 9 | 7 | 7.5 | 6 | 6.5 | 53.3 | 44.0 | 44.0 | 48.0 | 7 | 14 | 57.0 | 66.0 | 7 | 14 | 40.0 | 42.0 | 7 | 7 | 6 | 8.5 | 47.4 | 130 | 142 | 154 | 7 | 6.5 | 50.0 | 60.0 | 5 | 12 | 5 | 6.5 | 0 |
| 34 FT | 25 | 26 | 13 | 9 | 7 | 7 | 6 | 6 | 53.0 | 45.0 | 45.0 | 49.0 | 7 | 14 | 57.0 | 65.0 | 7 | 14 | 39.0 | 41.0 | 7 | 6 | 6 | 7.5 | 47.3 | 130 | 142 | 154 | 7 | 6 | 50.0 | 60.0 | 5 | 12 | 5 | 6.5 | 0 |
| 36 FT | 26 | 28 | 14 | 9 | 7 | 7 | 6 | 6.5 | 53.9 | 46.0 | 46.0 | 46.0 | 7 | 13 | 56.0 | 65.0 | 7 | 13 | 38.0 | 40.0 | 7 | 7 | 5 | 6 | 44.9 | 132 | 144 | 156 | 7 | 6 | 50.0 | 60.0 | 5 | 12 | 5 | 6 | 0 |
| 38 FT | 26 | 29 | 15 | 9 | 7 | 6.5 | 6 | 6.5 | 54.6 | 50.0 | 50.0 | 50.0 | 7 | 13 | 56.0 | 65.0 | 7 | 13 | 39.0 | 41.0 | 7 | 6.5 | 6 | 8 | 48.1 | 133 | 145 | 157 | 7 | 6 | 50.0 | 60.0 | 5 | 12 | 6 | 8.5 | 0 |
| 40 FT | 27 | 29 | 15 | 9 | 7 | 6.5 | 6 | 7 | 53.4 | 51.0 | 51.0 | 51.0 | 7 | 13 | 56.0 | 64.0 | 7 | 13 | 38.0 | 40.0 | 7 | 6 | 6 | 8 | 46.9 | 133 | 145 | 157 | 8 | 7.5 | 56.0 | 66.0 | 5 | 12 | 5 | 6 | 0 |
| 42 FT | 28 | 30 | 15 | 9 | 7 | 6.5 | 6 | 6.5 | 53.4 | 52.0 | 52.0 | 52.0 | 7 | 12 | 56.0 | 64.0 | 7 | 12 | 38.0 | 39.0 | 7 | 6 | 6 | 8 | 47.0 | 134 | 146 | 158 | 8 | 7.5 | 56.0 | 66.0 | 5 | 12 | 6 | 8 | 0 |
| 44 FT | 29 | 31 | 15 | 9 | 7 | 6 | 6 | 6.5 | 53.4 | 53.0 | 53.0 | 53.0 | 7 | 12 | 56.0 | 63.0 | 7 | 12 | 37.0 | 39.0 | 7 | 6 | 6 | 7.5 | 47.1 | 135 | 147 | 159 | 8 | 7.5 | 56.0 | 66.0 | 5 | 12 | 6 | 8 | 0 |
| 46 FT | 30 | 32 | 15 | 9 | 7 | 6 | 6 | 6.5 | 53.5 | 54.0 | 54.0 | 54.0 | 7 | 12 | 55.0 | 63.0 | 7 | 12 | 37.0 | 38.0 | 7 | 6 | 6 | 7 | 47.4 | 136 | 148 | 160 | 8 | 7.5 | 56.0 | 66.0 | 5 | 12 | 6 | 8 | 0 |
| 48 FT | 31 | 33 | 15 | 9 | 7 | 6 | 6 | 6 | 53.5 | 55.0 | 55.0 | 55.0 | 7 | 12 | 55.0 | 62.0 | 7 | 12 | 37.0 | 38.0 | 7 | 6 | 6 | 7 | 47.5 | 137 | 149 | 161 | 8 | 7 | 56.0 | 66.0 | 5 | 12 | 6 | 8 | 0 |
| 50 FT | 31 | 34 | 16 | 9 | 8 | 7.5 | 6 | 6 | 54.4 | 55.0 | 55.0 | 55.0 | 7 | 12 | 55.0 | 62.0 | 7 | 12 | 37.0 | 38.0 | 7 | 6 | 6 | 7 | 47.9 | 138 | 150 | 162 | 8 | 7 | 56.0 | 67.0 | 5 | 12 | 6 | 8 | 0 |

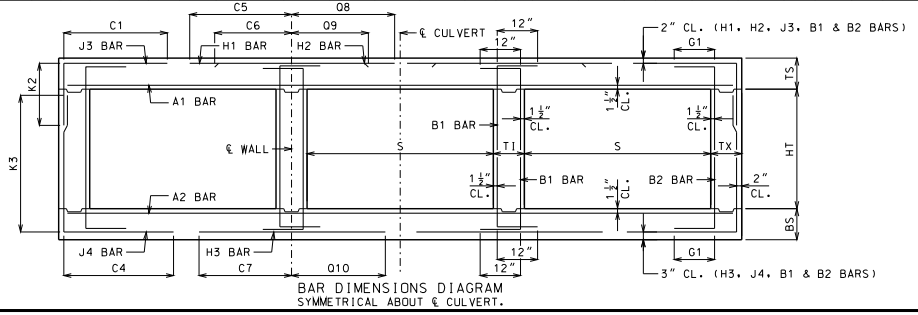


BAR DIMENSIONS DIAGRAM
SYMMETRICAL ABOUT ℄ CULVERT.

GENERAL NOTES:

IF DESIGN FILL IS BETWEEN TABULATED DESIGN FILLS, USE THE NEXT GREATER TABULATED DESIGN FILL, EXCEPT FOR DESIGN FILLS BETWEEN 2 FEET AND 4 FEET. FOR DESIGN FILLS BETWEEN 2 FEET AND 4 FEET USE THE GREATER MEMBER THICKNESS, AREA OF REINFORCEMENT AND BAR DIMENSIONS FROM THE 2 FEET AND 4 FEET TABULATED DESIGN FILLS. AREA OF REINFORCEMENT EQUALS BAR AREA PER FOOT SPACING.

SPECIAL DESIGNS ARE REQUIRED WHEN THE DESIGN FILL IS LESS THAN 1 FOOT OR GREATER THAN 50 FEET.

DIMENSIONS ARE IN INCHES UNLESS OTHERWISE SPECIFIED.

DESIGN FILLS ARE MEASURED FROM THE TOP OF TOP SLAB TO THE TOP OF EARTH FILL OR ROADWAY.

CULVERTS MEET STRENGTH AND SERVICEABILITY REQUIREMENTS FOR THE DESIGN VEHICULAR LIVE LOAD HL-93 MINUS THE LANE LOAD.


MISSOURI HIGHWAYS AND TRANSPORTATION COMMISSION
105 WEST CAPITOL
JEFFERSON CITY, MO 65102
1-888-ASK-MODOT (1-888-275-6636)


STATE OF MISSOURI — DENNIS W. HECKMAN — NUMBER PE-27141 — PROFESSIONAL ENGINEER
THIS SHEET HAS BEEN SIGNED, SEALED AND DATED ELECTRONICALLY.

# CONCRETE TRIPLE BOX CULVERT

MEMBER THICKNESS
BAR SIZE, SPACING & DIMENSIONS

SPAN (S): 12 FEET
HEIGHT (HT): 6 THRU 11 FEET

DATE EFFECTIVE: 12/01/2011
DATE PREPARED: 9/29/2011

703.87

SHEET NO.
18 OF 27

IF A SEAL IS PRESENT ON THIS SHEET IT HAS BEEN ELECTRONICALLY SEALED AND DATED.

SPAN (S) = 12 FT  HEIGHT (HT) = 12 FT OR 13 FT

| DESIGN FILL | MEMBER THICKNESS | | | | TOP SLAB BARS | | | | | | | | | | | | | | BOTTOM SLAB BARS | | | | | | | | | | WALL BARS | | | | |
|---|---|---|---|---|---|---|---|---|---|---|---|---|---|---|---|---|---|---|---|---|---|---|---|---|---|---|---|---|---|---|---|---|---|
| | | | | | A1 BARS | | J3 BARS | | | | | H1 BARS | | | | H2 BARS | | | | A2 BARS | | J4 BARS | | | | H3 BARS | | | | B1 BARS | | B2 BARS | |
| | TS | BS | TX | TI | SIZE | SPA. | SIZE | SPA. | C1 | K2 HT=12' | K2 HT=13' | SIZE | SPA. | C5 | Q8 | SIZE | SPA. | C6 | Q9 | SIZE | SPA. | SIZE | SPA. | C4 | K3 HT=12' | K3 HT=13' | SIZE | SPA. | C7 | Q10 | SIZE | SPA. | SIZE | SPA. | G1 |
| 1 FT | 14 | 10 | 10 | 10 | 5 | 6 | 5 | 7 | 63.8 | 34.0 | 34.0 | 5 | 12 | 118.5 | 87.5 | 5 | 12 | 32.0 | 35.0 | 5 | 7 | 6 | 6.5 | 89.1 | 150 | 162 | 6 | 7 | 55.0 | 57.0 | 5 | 12 | 5 | 8.5 | 12 |
| 2 FT | 14 | 10 | 10 | 10 | 5 | 6 | 5 | 7 | 63.8 | 34.0 | 34.0 | 5 | 12 | 118.5 | 87.5 | 5 | 12 | 31.0 | 33.0 | 5 | 7 | 6 | 6 | 79.6 | 150 | 162 | 6 | 6.5 | 54.0 | 56.0 | 5 | 12 | 5 | 8 | 12 |
| 4 FT | 11 | 11 | 10 | 10 | 5 | 6.5 | 5 | 6 | 63.8 | 31.0 | 31.0 | 5 | 12 | 118.5 | 89.0 | 5 | 12 | 34.0 | 35.0 | 5 | 6.5 | 6 | 6.5 | 76.3 | 151 | 163 | 6 | 6.5 | 53.0 | 57.0 | 5 | 12 | 5 | 8 | 12 |
| 6 FT | 11 | 11 | 10 | 10 | 5 | 6.5 | 5 | 6 | 71.3 | 31.0 | 31.0 | 6 | 16 | 65.0 | 69.0 | 6 | 16 | 35.0 | 36.0 | 5 | 6.5 | 6 | 6 | 69.1 | 151 | 163 | 6 | 6 | 51.0 | 56.0 | 5 | 12 | 5 | 8 | 12 |
| 8 FT | 11 | 12 | 10 | 10 | 5 | 6.5 | 6 | 7 | 65.4 | 31.0 | 35.0 | 6 | 15 | 57.0 | 60.0 | 6 | 15 | 34.0 | 35.0 | 5 | 6 | 6 | 6 | 66.4 | 152 | 164 | 6 | 6 | 50.0 | 56.0 | 5 | 12 | 5 | 8 | 0 |
| 10 FT | 12 | 13 | 10 | 10 | 5 | 6.5 | 6 | 7 | 62.9 | 36.0 | 36.0 | 6 | 15 | 55.0 | 58.0 | 6 | 15 | 33.0 | 34.0 | 5 | 6 | 6 | 6 | 63.8 | 153 | 165 | 6 | 6 | 49.0 | 56.0 | 5 | 12 | 5 | 8 | 0 |
| 12 FT | 13 | 14 | 11 | 10 | 5 | 6.5 | 6 | 7.5 | 61.1 | 33.0 | 37.0 | 6 | 14 | 53.0 | 57.0 | 6 | 14 | 33.0 | 34.0 | 6 | 8 | 6 | 7 | 62.0 | 154 | 166 | 6 | 6 | 49.0 | 56.0 | 5 | 12 | 5 | 7.5 | 0 |
| 14 FT | 14 | 15 | 11 | 10 | 5 | 6 | 6 | 7 | 59.9 | 38.0 | 38.0 | 6 | 14 | 51.0 | 57.0 | 6 | 14 | 32.0 | 34.0 | 6 | 7.5 | 6 | 6 | 60.9 | 155 | 167 | 6 | 6 | 48.0 | 56.0 | 5 | 12 | 5 | 7.5 | 0 |
| 16 FT | 15 | 16 | 12 | 10 | 6 | 8 | 6 | 7 | 65.0 | 39.0 | 39.0 | 6 | 14 | 56.0 | 62.0 | 6 | 14 | 38.0 | 40.0 | 6 | 7 | 6 | 7 | 59.9 | 156 | 168 | 6 | 6 | 48.0 | 56.0 | 5 | 12 | 5 | 7 | 0 |
| 18 FT | 16 | 17 | 12 | 10 | 6 | 8 | 6 | 6.5 | 64.1 | 40.0 | 40.0 | 6 | 13 | 55.0 | 62.0 | 6 | 13 | 38.0 | 40.0 | 6 | 7 | 6 | 6 | 59.1 | 157 | 169 | 6 | 6 | 48.0 | 56.0 | 5 | 12 | 5 | 7 | 0 |
| 20 FT | 17 | 18 | 13 | 10 | 6 | 7.5 | 6 | 6.5 | 63.8 | 41.0 | 41.0 | 6 | 13 | 55.0 | 61.0 | 6 | 13 | 38.0 | 40.0 | 6 | 6 | 6 | 7 | 58.5 | 158 | 170 | 6 | 6 | 48.0 | 56.0 | 5 | 12 | 5 | 6.5 | 0 |
| 22 FT | 18 | 20 | 13 | 10 | 6 | 7 | 6 | 6 | 63.3 | 42.0 | 42.0 | 6 | 13 | 54.0 | 61.0 | 6 | 13 | 38.0 | 40.0 | 6 | 6 | 6 | 6.5 | 58.4 | 160 | 172 | 6 | 6 | 48.0 | 56.0 | 5 | 12 | 5 | 6.5 | 0 |
| 24 FT | 19 | 21 | 14 | 10 | 6 | 6.5 | 6 | 6.5 | 63.1 | 39.0 | 43.0 | 6 | 12 | 54.0 | 61.0 | 6 | 12 | 37.0 | 40.0 | 7 | 8 | 6 | 7 | 58.0 | 161 | 173 | 7 | 7.5 | 51.0 | 60.0 | 5 | 12 | 5 | 6 | 0 |
| 26 FT | 20 | 22 | 14 | 10 | 6 | 6.5 | 6 | 6 | 62.8 | 44.0 | 44.0 | 6 | 12 | 53.0 | 61.0 | 6 | 12 | 37.0 | 40.0 | 7 | 7.5 | 6 | 6.5 | 57.6 | 162 | 174 | 7 | 7.5 | 51.0 | 60.0 | 5 | 12 | 5 | 6 | 0 |
| 28 FT | 21 | 23 | 15 | 10 | 6 | 6 | 6 | 6 | 62.9 | 45.0 | 45.0 | 6 | 12 | 53.0 | 61.0 | 6 | 12 | 37.0 | 40.0 | 7 | 7 | 6 | 7 | 57.4 | 163 | 175 | 7 | 7 | 51.0 | 60.0 | 5 | 12 | 6 | 8 | 0 |
| 30 FT | 23 | 25 | 15 | 10 | 7 | 7.5 | 6 | 6 | 62.8 | 47.0 | 47.0 | 7 | 15 | 57.0 | 65.0 | 7 | 15 | 40.0 | 42.0 | 7 | 7 | 6 | 7 | 57.5 | 165 | 177 | 7 | 6.5 | 51.0 | 60.0 | 5 | 12 | 6 | 8 | 0 |
| 32 FT | 23 | 26 | 16 | 10 | 7 | 7 | 6 | 6 | 63.1 | 47.0 | 47.0 | 7 | 14 | 57.0 | 65.0 | 7 | 14 | 41.0 | 43.0 | 7 | 7 | 6 | 7.5 | 57.5 | 166 | 178 | 7 | 6.5 | 51.0 | 60.0 | 5 | 12 | 6 | 8 | 0 |
| 34 FT | 24 | 27 | 16 | 10 | 7 | 7 | 7 | 7.5 | 68.1 | 48.0 | 48.0 | 7 | 14 | 57.0 | 65.0 | 7 | 14 | 40.0 | 42.0 | 7 | 7 | 6 | 7 | 57.5 | 167 | 179 | 7 | 6 | 51.0 | 60.0 | 5 | 12 | 6 | 8 | 0 |
| 36 FT | 25 | 28 | 17 | 10 | 7 | 7 | 6 | 6 | 63.6 | 49.0 | 49.0 | 7 | 14 | 57.0 | 64.0 | 7 | 14 | 40.0 | 42.0 | 7 | 7 | 6 | 7 | 57.8 | 168 | 180 | 7 | 6 | 51.0 | 60.0 | 5 | 12 | 6 | 7.5 | 0 |
| 38 FT | 26 | 29 | 17 | 10 | 7 | 7 | 7 | 7.5 | 68.6 | 50.0 | 50.0 | 7 | 13 | 57.0 | 64.0 | 7 | 13 | 39.0 | 41.0 | 7 | 6.5 | 6 | 7 | 57.9 | 169 | 181 | 7 | 6 | 51.0 | 60.0 | 5 | 12 | 6 | 7.5 | 0 |
| 40 FT | 27 | 29 | 17 | 10 | 7 | 6.5 | 7 | 8 | 66.8 | 51.0 | 51.0 | 7 | 13 | 56.0 | 63.0 | 7 | 13 | 38.0 | 40.0 | 7 | 6 | 6 | 7 | 55.9 | 169 | 181 | 8 | 7.5 | 57.0 | 66.0 | 5 | 12 | 6 | 7.5 | 0 |
| 42 FT | 28 | 30 | 17 | 10 | 7 | 6.5 | 7 | 7 | 66.9 | 52.0 | 52.0 | 7 | 12 | 56.0 | 63.0 | 7 | 12 | 38.0 | 39.0 | 7 | 6 | 6 | 7 | 56.0 | 170 | 182 | 8 | 7.5 | 57.0 | 66.0 | 5 | 12 | 6 | 7.5 | 0 |
| 44 FT | 29 | 31 | 18 | 10 | 7 | 6 | 7 | 7.5 | 67.8 | 53.0 | 53.0 | 7 | 12 | 56.0 | 62.0 | 7 | 12 | 37.0 | 38.0 | 7 | 6 | 6 | 6.5 | 56.4 | 171 | 183 | 8 | 7.5 | 57.0 | 66.0 | 5 | 12 | 6 | 7 | 0 |
| 46 FT | 29 | 32 | 19 | 10 | 7 | 6 | 7 | 7.5 | 68.5 | 53.0 | 53.0 | 7 | 12 | 56.0 | 62.0 | 7 | 12 | 38.0 | 39.0 | 7 | 6 | 6 | 6.5 | 56.8 | 172 | 184 | 8 | 7 | 57.0 | 67.0 | 5 | 12 | 6 | 6.5 | 0 |
| 48 FT | 30 | 33 | 19 | 10 | 7 | 6 | 7 | 7 | 68.5 | 54.0 | 54.0 | 7 | 12 | 56.0 | 61.0 | 7 | 12 | 37.0 | 38.0 | 7 | 6 | 6 | 6.5 | 56.9 | 173 | 185 | 8 | 7 | 57.0 | 67.0 | 5 | 12 | 6 | 6.5 | 0 |
| 50 FT | 31 | 34 | 19 | 10 | 7 | 6 | 7 | 6.5 | 68.6 | 55.0 | 55.0 | 7 | 12 | 56.0 | 61.0 | 7 | 12 | 37.0 | 38.0 | 7 | 6 | 6 | 6.5 | 57.3 | 174 | 186 | 8 | 7 | 57.0 | 67.0 | 5 | 12 | 6 | 6.5 | 0 |

SPAN (S) = 12 FT  HEIGHT (HT) = 14 FT OR 15 FT

| DESIGN FILL | MEMBER THICKNESS | | | | TOP SLAB BARS | | | | | | | | | | | | | | BOTTOM SLAB BARS | | | | | | | | | | WALL BARS | | | | |
|---|---|---|---|---|---|---|---|---|---|---|---|---|---|---|---|---|---|---|---|---|---|---|---|---|---|---|---|---|---|---|---|---|---|
| | | | | | A1 BARS | | J3 BARS | | | | | H1 BARS | | | | H2 BARS | | | | A2 BARS | | J4 BARS | | | | H3 BARS | | | | B1 BARS | | B2 BARS | |
| | TS | BS | TX | TI | SIZE | SPA. | SIZE | SPA. | C1 | K2 HT=14' | K2 HT=15' | SIZE | SPA. | C5 | Q8 | SIZE | SPA. | C6 | Q9 | SIZE | SPA. | SIZE | SPA. | C4 | K3 HT=14' | K3 HT=15' | SIZE | SPA. | C7 | Q10 | SIZE | SPA. | SIZE | SPA. | G1 |
| 1 FT | 14 | 11 | 10 | 12 | 5 | 6 | 6 | 7.5 | 64.0 | 34.0 | 38.0 | 5 | 12 | 119.5 | 88.5 | 5 | 12 | 32.0 | 35.0 | 5 | 7 | 6 | 6 | 95.5 | 175 | 187 | 5 | 6 | 55.0 | 55.0 | 5 | 12 | 5 | 8 | 12 |
| 2 FT | 14 | 12 | 10 | 12 | 5 | 6 | 6 | 7 | 64.0 | 34.0 | 38.0 | 5 | 12 | 119.5 | 88.5 | 5 | 12 | 31.0 | 34.0 | 5 | 7 | 6 | 6 | 95.5 | 176 | 188 | 5 | 6 | 54.0 | 55.0 | 5 | 12 | 5 | 8 | 12 |
| 4 FT | 10 | 11 | 12 | 12 | 5 | 6 | 6 | 7.5 | 68.3 | 34.0 | 34.0 | 6 | 15 | 121.5 | 77.0 | 6 | 15 | 37.0 | 37.0 | 5 | 6.5 | 6 | 6 | 86.8 | 175 | 187 | 6 | 6.5 | 55.0 | 57.0 | 5 | 11 | 5 | 7 | 12 |
| 6 FT | 10 | 12 | 12 | 12 | 5 | 6.5 | 6 | 7 | 80.0 | 34.0 | 34.0 | 6 | 15 | 61.0 | 61.0 | 6 | 15 | 35.0 | 35.0 | 5 | 6 | 6 | 6.5 | 83.1 | 176 | 188 | 6 | 6.5 | 53.0 | 57.0 | 5 | 12 | 5 | 7 | 12 |
| 8 FT | 11 | 12 | 12 | 12 | 5 | 7 | 6 | 7.5 | 76.8 | 35.0 | 35.0 | 6 | 15 | 58.0 | 59.0 | 6 | 15 | 35.0 | 35.0 | 5 | 6 | 6 | 6 | 77.1 | 176 | 188 | 6 | 6 | 52.0 | 55.0 | 5 | 12 | 5 | 7 | 0 |
| 10 FT | 12 | 13 | 12 | 12 | 5 | 6.5 | 6 | 7.5 | 74.4 | 36.0 | 36.0 | 6 | 15 | 56.0 | 58.0 | 6 | 15 | 34.0 | 35.0 | 5 | 6 | 6 | 6 | 75.5 | 177 | 189 | 6 | 6 | 51.0 | 55.0 | 5 | 12 | 5 | 6.5 | 0 |
| 12 FT | 13 | 14 | 13 | 12 | 5 | 6.5 | 6 | 7.5 | 71.5 | 37.0 | 37.0 | 6 | 15 | 54.0 | 57.0 | 6 | 15 | 34.0 | 35.0 | 6 | 8 | 6 | 6 | 73.0 | 178 | 190 | 6 | 6 | 50.0 | 55.0 | 5 | 12 | 5 | 6.5 | 0 |
| 14 FT | 14 | 15 | 13 | 12 | 5 | 6 | 6 | 6.5 | 70.3 | 38.0 | 38.0 | 6 | 14 | 52.0 | 56.0 | 6 | 14 | 33.0 | 35.0 | 6 | 7.5 | 6 | 6 | 72.0 | 179 | 191 | 6 | 6 | 50.0 | 55.0 | 5 | 12 | 5 | 6.5 | 0 |
| 16 FT | 15 | 16 | 14 | 12 | 6 | 8 | 6 | 6.5 | 74.5 | 39.0 | 39.0 | 6 | 14 | 57.0 | 62.0 | 6 | 14 | 39.0 | 41.0 | 6 | 7 | 6 | 6.5 | 70.3 | 180 | 192 | 6 | 6 | 49.0 | 55.0 | 5 | 12 | 5 | 6 | 0 |
| 18 FT | 15 | 17 | 15 | 12 | 6 | 7.5 | 6 | 6.5 | 72.4 | 39.0 | 39.0 | 6 | 13 | 56.0 | 61.0 | 6 | 13 | 39.0 | 40.0 | 6 | 6.5 | 6 | 6.5 | 69.0 | 181 | 193 | 6 | 6 | 49.0 | 56.0 | 5 | 12 | 6 | 8 | 0 |
| 20 FT | 17 | 19 | 15 | 12 | 6 | 7.5 | 6 | 6 | 73.0 | 41.0 | 41.0 | 6 | 13 | 56.0 | 61.0 | 6 | 13 | 39.0 | 41.0 | 6 | 6 | 6 | 6 | 69.6 | 183 | 195 | 6 | 6 | 49.0 | 56.0 | 5 | 12 | 6 | 8 | 0 |
| 22 FT | 18 | 20 | 16 | 12 | 6 | 7 | 6 | 6.5 | 72.8 | 42.0 | 42.0 | 6 | 13 | 55.0 | 61.0 | 6 | 13 | 39.0 | 41.0 | 6 | 6 | 6 | 6 | 68.4 | 184 | 196 | 6 | 6 | 49.0 | 56.0 | 5 | 12 | 6 | 8 | 0 |
| 24 FT | 19 | 21 | 16 | 12 | 6 | 6.5 | 6 | 6 | 72.4 | 43.0 | 43.0 | 6 | 13 | 55.0 | 61.0 | 6 | 13 | 38.0 | 41.0 | 7 | 8 | 7 | 7.5 | 71.1 | 185 | 197 | 7 | 7.5 | 52.0 | 59.0 | 5 | 12 | 6 | 8 | 0 |
| 26 FT | 20 | 22 | 16 | 12 | 6 | 6.5 | 7 | 7.5 | 77.1 | 44.0 | 50.0 | 6 | 12 | 55.0 | 61.0 | 6 | 12 | 38.0 | 40.0 | 7 | 7.5 | 7 | 7 | 70.8 | 186 | 198 | 7 | 7.5 | 52.0 | 60.0 | 5 | 12 | 6 | 8 | 0 |
| 28 FT | 21 | 23 | 17 | 12 | 6 | 6 | 7 | 7.5 | 77.1 | 45.0 | 51.0 | 6 | 12 | 54.0 | 60.0 | 6 | 12 | 37.0 | 40.0 | 7 | 6.5 | 7 | 7.5 | 70.5 | 187 | 199 | 7 | 6.5 | 52.0 | 60.0 | 5 | 12 | 6 | 7.5 | 0 |
| 30 FT | 22 | 25 | 18 | 12 | 6 | 6 | 7 | 7.5 | 77.3 | 46.0 | 46.0 | 7 | 15 | 59.0 | 65.0 | 7 | 15 | 42.0 | 44.0 | 7 | 7 | 6 | 6 | 67.8 | 189 | 201 | 7 | 6.5 | 52.0 | 60.0 | 5 | 12 | 6 | 7 | 0 |
| 32 FT | 23 | 26 | 19 | 12 | 7 | 7.5 | 7 | 7.5 | 77.5 | 47.0 | 47.0 | 7 | 15 | 58.0 | 65.0 | 7 | 15 | 41.0 | 44.0 | 7 | 7 | 6 | 6 | 67.8 | 190 | 202 | 7 | 6.5 | 52.0 | 60.0 | 5 | 12 | 6 | 6.5 | 0 |
| 34 FT | 24 | 27 | 19 | 12 | 7 | 7.5 | 7 | 7 | 77.6 | 48.0 | 48.0 | 7 | 14 | 58.0 | 65.0 | 7 | 14 | 41.0 | 43.0 | 7 | 7 | 6 | 6 | 67.9 | 191 | 203 | 7 | 6 | 52.0 | 60.0 | 5 | 12 | 6 | 6.5 | 0 |
| 36 FT | 25 | 28 | 20 | 12 | 7 | 7 | 7 | 7.5 | 78.1 | 49.0 | 49.0 | 7 | 14 | 58.0 | 64.0 | 7 | 14 | 40.0 | 42.0 | 7 | 7 | 6 | 6 | 68.1 | 192 | 204 | 7 | 6 | 52.0 | 60.0 | 5 | 12 | 6 | 6.5 | 0 |
| 38 FT | 26 | 29 | 21 | 12 | 7 | 7 | 7 | 7.5 | 78.6 | 50.0 | 50.0 | 7 | 13 | 58.0 | 64.0 | 7 | 13 | 40.0 | 41.0 | 7 | 6.5 | 6 | 6 | 68.3 | 193 | 205 | 7 | 6 | 52.0 | 61.0 | 5 | 12 | 6 | 6 | 0 |
| 40 FT | 27 | 30 | 21 | 12 | 7 | 6.5 | 7 | 7.5 | 77.1 | 51.0 | 51.0 | 7 | 13 | 57.0 | 63.0 | 7 | 13 | 39.0 | 40.0 | 7 | 6.5 | 6 | 6 | 66.5 | 194 | 206 | 7 | 6 | 52.0 | 61.0 | 5 | 12 | 6 | 6 | 0 |
| 42 FT | 27 | 31 | 21 | 12 | 7 | 6 | 7 | 7 | 77.0 | 51.0 | 51.0 | 7 | 12 | 57.0 | 63.0 | 7 | 12 | 40.0 | 41.0 | 7 | 6.5 | 6 | 6 | 66.8 | 195 | 207 | 7 | 6 | 52.0 | 61.0 | 5 | 12 | 6 | 6 | 0 |
| 44 FT | 28 | 31 | 22 | 12 | 7 | 6.5 | 7 | 7 | 77.6 | 52.0 | 58.0 | 7 | 12 | 57.0 | 63.0 | 7 | 12 | 39.0 | 40.0 | 7 | 6 | 7 | 7.5 | 69.6 | 195 | 207 | 8 | 7.5 | 58.0 | 67.0 | 5 | 12 | 6 | 6 | 0 |
| 46 FT | 29 | 32 | 22 | 12 | 7 | 6 | 7 | 6.5 | 77.9 | 59.0 | 59.0 | 7 | 12 | 57.0 | 62.0 | 7 | 12 | 38.0 | 40.0 | 7 | 6 | 7 | 7.5 | 70.0 | 196 | 208 | 8 | 7.5 | 58.0 | 67.0 | 5 | 12 | 6 | 6 | 0 |
| 48 FT | 30 | 33 | 23 | 12 | 7 | 6 | 7 | 6.5 | 78.6 | 54.0 | 60.0 | 7 | 12 | 57.0 | 62.0 | 7 | 12 | 38.0 | 39.0 | 7 | 6 | 7 | 7.5 | 70.4 | 197 | 209 | 8 | 7 | 58.0 | 67.0 | 5 | 12 | 7 | 8 | 0 |
| 50 FT | 30 | 34 | 24 | 12 | 7 | 6 | 7 | 6.5 | 79.1 | 54.0 | 60.0 | 7 | 12 | 57.0 | 62.0 | 7 | 12 | 38.0 | 39.0 | 7 | 6 | 7 | 7 | 70.6 | 198 | 210 | 8 | 7 | 58.0 | 67.0 | 5 | 12 | 7 | 8 | 0 |

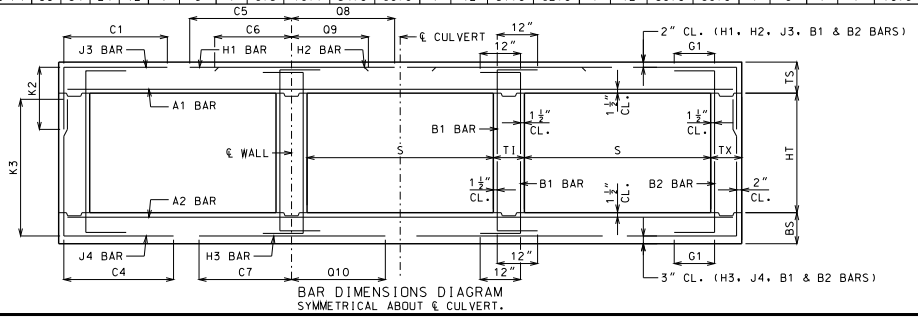


BAR DIMENSIONS DIAGRAM
SYMMETRICAL ABOUT ℄ CULVERT.

GENERAL NOTES:

IF DESIGN FILL IS BETWEEN TABULATED DESIGN FILLS, USE THE NEXT GREATER TABULATED DESIGN FILL, EXCEPT FOR DESIGN FILLS BETWEEN 2 FEET AND 4 FEET. FOR DESIGN FILLS BETWEEN 2 FEET AND 4 FEET USE THE GREATER MEMBER THICKNESS, AREA OF REINFORCEMENT AND BAR DIMENSIONS FROM THE 2 FEET AND 4 FEET TABULATED DESIGN FILLS. AREA OF REINFORCEMENT EQUALS BAR AREA PER FOOT SPACING.

SPECIAL DESIGNS ARE REQUIRED WHEN THE DESIGN FILL IS LESS THAN 1 FOOT OR GREATER THAN 50 FEET.

DIMENSIONS ARE IN INCHES UNLESS OTHERWISE SPECIFIED.

DESIGN FILLS ARE MEASURED FROM THE TOP OF TOP SLAB TO THE TOP OF EARTH FILL OR ROADWAY.

CULVERTS MEET STRENGTH AND SERVICEABILITY REQUIREMENTS FOR THE DESIGN VEHICULAR LIVE LOAD HL-93 MINUS THE LANE LOAD.


MISSOURI HIGHWAYS AND TRANSPORTATION COMMISSION
105 WEST CAPITOL
JEFFERSON CITY, MO 65102
1-888-ASK-MODOT (1-888-275-6636)


STATE OF MISSOURI
DENNIS W. HECKMAN
NUMBER PE-27141
PROFESSIONAL ENGINEER
THIS SHEET HAS BEEN SIGNED, SEALED AND DATED ELECTRONICALLY.

# CONCRETE TRIPLE BOX CULVERT

MEMBER THICKNESS
BAR SIZE, SPACING & DIMENSIONS

SPAN (S): 12 FEET
HEIGHT (HT): 12 THRU 15 FEET

DATE EFFECTIVE: 12/01/2011
DATE PREPARED: 9/29/2011

703.87

SHEET NO.
19 OF 27

IF A SEAL IS PRESENT ON THIS SHEET IT HAS BEEN ELECTRONICALLY SEALED AND DATED.

SPAN (S) = 13 FT  HEIGHT (HT) = 7 FT OR 8 FT OR 9 FT

| DESIGN FILL | MEMBER THICKNESS | | | | TOP SLAB BARS | | | | | | | | | | | | | | | BOTTOM SLAB BARS | | | | | | | | | | | | WALL BARS | | | | |
|---|---|---|---|---|---|---|---|---|---|---|---|---|---|---|---|---|---|---|---|---|---|---|---|---|---|---|---|---|---|---|---|---|---|---|---|
| | | | | | A1 BARS | | J3 BARS | | | K2 | | | H1 BARS | | | | H2 BARS | | | | A2 BARS | | J4 BARS | | | K3 | | | H3 BARS | | | | B1 BARS | | B2 BARS | | |
| | TS | BS | TX | TI | SIZE | SPA. | SIZE | SPA. | C1 | HT=7' | HT=8' | HT=9' | SIZE | SPA. | C5 | Q8 | SIZE | SPA. | C6 | Q9 | SIZE | SPA. | SIZE | SPA. | C4 | HT=7' | HT=8' | HT=9' | SIZE | SPA. | C7 | Q10 | SIZE | SPA. | SIZE | SPA. | G1 |
| 1 FT | 14 | 9 | 8 | 8 | 5 | 6 | 5 | 8.5 | 65.8 | 34.0 | 34.0 | 34.0 | 5 | 12 | 125.5 | 92.5 | 5 | 12 | 34.0 | 38.0 | 5 | 7.5 | 6 | 6 | 60.0 | 89 | 101 | 113 | 6 | 6 | 56.0 | 59.0 | 5 | 12 | 5 | 12 | 12 |
| 2 FT | 15 | 10 | 8 | 8 | 6 | 8 | 5 | 8 | 65.8 | 31.0 | 35.0 | 35.0 | 6 | 16 | 129.5 | 99.5 | 6 | 16 | 40.0 | 44.0 | 5 | 7 | 6 | 6.5 | 55.5 | 90 | 102 | 114 | 6 | 6 | 54.0 | 59.0 | 5 | 12 | 5 | 12 | 12 |
| 4 FT | 11 | 10 | 8 | 8 | 6 | 8 | 6 | 7 | 56.4 | 31.0 | 35.0 | 35.0 | 6 | 14 | 77.0 | 97.0 | 6 | 14 | 38.0 | 40.0 | 5 | 7 | 6 | 6 | 49.5 | 90 | 102 | 114 | 7 | 6.5 | 57.0 | 62.0 | 5 | 12 | 5 | 12 | 12 |
| 6 FT | 11 | 11 | 8 | 8 | 6 | 8.5 | 6 | 7 | 49.0 | 31.0 | 31.0 | 35.0 | 6 | 13 | 63.0 | 75.0 | 6 | 13 | 35.0 | 37.0 | 5 | 6.5 | 6 | 7 | 45.9 | 91 | 103 | 115 | 7 | 7 | 55.0 | 62.0 | 5 | 12 | 5 | 12 | 12 |
| 8 FT | 12 | 12 | 8 | 8 | 5 | 6 | 5 | 6 | 42.0 | 32.0 | 32.0 | 32.0 | 6 | 14 | 58.0 | 67.0 | 6 | 14 | 34.0 | 36.0 | 5 | 6 | 6 | 7 | 43.3 | 92 | 104 | 116 | 7 | 7 | 54.0 | 62.0 | 5 | 12 | 5 | 12 | 0 |
| 10 FT | 13 | 14 | 8 | 8 | 5 | 6 | 5 | 6 | 39.8 | 33.0 | 33.0 | 33.0 | 6 | 13 | 55.0 | 63.0 | 6 | 13 | 33.0 | 36.0 | 6 | 8 | 5 | 6.5 | 38.1 | 94 | 106 | 118 | 6 | 6 | 50.0 | 59.0 | 5 | 12 | 5 | 12 | 0 |
| 12 FT | 14 | 15 | 8 | 8 | 6 | 8 | 5 | 6 | 37.9 | 34.0 | 34.0 | 34.0 | 6 | 13 | 53.0 | 62.0 | 6 | 13 | 33.0 | 35.0 | 6 | 7.5 | 5 | 6.5 | 36.9 | 95 | 107 | 119 | 6 | 6 | 49.0 | 59.0 | 5 | 12 | 5 | 12 | 0 |
| 14 FT | 15 | 16 | 8 | 8 | 6 | 7.5 | 5 | 6 | 41.4 | 35.0 | 35.0 | 35.0 | 6 | 12 | 58.0 | 67.0 | 6 | 12 | 39.0 | 41.0 | 6 | 7 | 5 | 6.5 | 35.9 | 96 | 108 | 120 | 6 | 6 | 49.0 | 59.0 | 5 | 12 | 5 | 10.5 | 0 |
| 16 FT | 16 | 17 | 8 | 8 | 6 | 7.5 | 6 | 8 | 44.4 | 36.0 | 36.0 | 36.0 | 6 | 12 | 57.0 | 67.0 | 6 | 12 | 38.0 | 41.0 | 6 | 7 | 5 | 6.5 | 35.1 | 97 | 109 | 121 | 6 | 6 | 49.0 | 60.0 | 5 | 12 | 5 | 9.5 | 0 |
| 18 FT | 17 | 18 | 8 | 8 | 6 | 7 | 6 | 7.5 | 43.5 | 37.0 | 37.0 | 37.0 | 6 | 12 | 56.0 | 66.0 | 6 | 12 | 38.0 | 41.0 | 6 | 6.5 | 5 | 6 | 34.5 | 98 | 110 | 122 | 7 | 7 | 52.0 | 63.0 | 5 | 12 | 5 | 9.5 | 0 |
| 20 FT | 18 | 20 | 9 | 8 | 6 | 6.5 | 6 | 8 | 44.3 | 38.0 | 38.0 | 38.0 | 7 | 15 | 61.0 | 71.0 | 7 | 15 | 43.0 | 46.0 | 6 | 6 | 5 | 7 | 34.6 | 100 | 112 | 124 | 6 | 6 | 49.0 | 60.0 | 5 | 12 | 5 | 9 | 0 |
| 22 FT | 20 | 21 | 9 | 8 | 6 | 6.5 | 6 | 8 | 43.4 | 40.0 | 40.0 | 40.0 | 6 | 12 | 55.0 | 66.0 | 6 | 12 | 38.0 | 41.0 | 7 | 8 | 5 | 6.5 | 34.5 | 101 | 113 | 125 | 7 | 7 | 52.0 | 63.0 | 5 | 12 | 5 | 8.5 | 0 |
| 24 FT | 21 | 22 | 9 | 8 | 6 | 6 | 6 | 7.5 | 43.0 | 41.0 | 41.0 | 41.0 | 7 | 15 | 60.0 | 71.0 | 7 | 15 | 43.0 | 46.0 | 7 | 7.5 | 5 | 6 | 34.3 | 102 | 114 | 126 | 7 | 7 | 51.0 | 63.0 | 5 | 12 | 5 | 8.5 | 0 |
| 26 FT | 22 | 24 | 10 | 8 | 6 | 6 | 6 | 8 | 43.8 | 42.0 | 42.0 | 42.0 | 7 | 15 | 59.0 | 70.0 | 7 | 15 | 42.0 | 46.0 | 7 | 7 | 5 | 6.5 | 34.5 | 104 | 116 | 128 | 7 | 7 | 51.0 | 63.0 | 5 | 12 | 5 | 8 | 0 |
| 28 FT | 23 | 25 | 11 | 8 | 7 | 7 | 5 | 6 | 40.5 | 43.0 | 43.0 | 43.0 | 7 | 14 | 59.0 | 70.0 | 7 | 14 | 42.0 | 46.0 | 7 | 6.5 | 5 | 7 | 34.9 | 105 | 117 | 129 | 7 | 6.5 | 51.0 | 63.0 | 5 | 12 | 5 | 8.5 | 0 |
| 30 FT | 25 | 26 | 11 | 8 | 7 | 7 | 5 | 6 | 40.0 | 45.0 | 45.0 | 45.0 | 7 | 14 | 59.0 | 70.0 | 7 | 14 | 41.0 | 44.0 | 7 | 6.5 | 5 | 6.5 | 34.9 | 106 | 118 | 130 | 7 | 6.5 | 51.0 | 63.0 | 5 | 12 | 5 | 7.5 | 0 |
| 32 FT | 26 | 27 | 11 | 8 | 7 | 7 | 5 | 6 | 39.8 | 46.0 | 46.0 | 46.0 | 7 | 13 | 59.0 | 69.0 | 7 | 13 | 40.0 | 43.0 | 7 | 6 | 5 | 6 | 34.8 | 107 | 119 | 131 | 7 | 6 | 51.0 | 63.0 | 5 | 12 | 5 | 7.5 | 0 |
| 34 FT | 27 | 29 | 11 | 8 | 7 | 6.5 | 6 | 8 | 43.9 | 47.0 | 47.0 | 51.0 | 7 | 13 | 58.0 | 69.0 | 7 | 13 | 40.0 | 42.0 | 7 | 6.5 | 6 | 7.5 | 37.9 | 109 | 121 | 133 | 8 | 7.5 | 57.0 | 69.0 | 5 | 12 | 5 | 7.5 | 0 |
| 36 FT | 28 | 30 | 11 | 8 | 7 | 6.5 | 6 | 7.5 | 43.9 | 52.0 | 52.0 | 52.0 | 7 | 12 | 58.0 | 68.0 | 7 | 12 | 40.0 | 42.0 | 7 | 6 | 6 | 7 | 37.9 | 110 | 122 | 134 | 8 | 7.5 | 57.0 | 69.0 | 5 | 12 | 5 | 7.5 | 0 |
| 38 FT | 29 | 31 | 11 | 8 | 7 | 6 | 6 | 6.5 | 43.9 | 53.0 | 53.0 | 53.0 | 7 | 12 | 58.0 | 68.0 | 7 | 12 | 39.0 | 41.0 | 7 | 6 | 6 | 7 | 38.0 | 111 | 123 | 135 | 8 | 7 | 57.0 | 69.0 | 5 | 12 | 5 | 7 | 0 |
| 40 FT | 30 | 32 | 12 | 8 | 7 | 6 | 6 | 7.5 | 44.8 | 54.0 | 54.0 | 54.0 | 7 | 12 | 58.0 | 68.0 | 7 | 12 | 38.0 | 40.0 | 7 | 6 | 6 | 7.5 | 38.5 | 112 | 124 | 136 | 8 | 7 | 57.0 | 70.0 | 5 | 12 | 5 | 7 | 0 |
| 42 FT | 31 | 33 | 12 | 8 | 8 | 7.5 | 6 | 7.5 | 43.8 | 55.0 | 55.0 | 55.0 | 8 | 15 | 66.0 | 75.0 | 8 | 15 | 46.0 | 47.0 | 7 | 6 | 6 | 7 | 37.6 | 113 | 125 | 137 | 8 | 7 | 57.0 | 69.0 | 5 | 12 | 5 | 7 | 0 |
| 44 FT | 32 | 34 | 12 | 8 | 8 | 7.5 | 6 | 7 | 43.9 | 56.0 | 56.0 | 56.0 | 8 | 14 | 65.0 | 74.0 | 8 | 14 | 45.0 | 47.0 | 7 | 6 | 6 | 7 | 37.8 | 114 | 126 | 138 | 8 | 7 | 57.0 | 69.0 | 5 | 12 | 5 | 7 | 0 |
| 46 FT | 32 | 35 | 12 | 8 | 8 | 7 | 6 | 7 | 43.9 | 56.0 | 56.0 | 56.0 | 8 | 14 | 65.0 | 74.0 | 8 | 14 | 46.0 | 47.0 | 7 | 6 | 6 | 6.5 | 37.8 | 115 | 127 | 139 | 8 | 7 | 57.0 | 69.0 | 5 | 12 | 5 | 7 | 0 |
| 48 FT | 33 | 35 | 12 | 8 | 8 | 7 | 6 | 7 | 43.9 | 57.0 | 57.0 | 57.0 | 8 | 14 | 65.0 | 74.0 | 8 | 14 | 45.0 | 47.0 | 8 | 7 | 6 | 6.5 | 37.9 | 115 | 127 | 139 | 8 | 6.5 | 57.0 | 69.0 | 5 | 12 | 5 | 6.5 | 0 |
| 50 FT | 34 | 36 | 12 | 8 | 8 | 7 | 6 | 6.5 | 43.9 | 58.0 | 58.0 | 58.0 | 8 | 14 | 65.0 | 73.0 | 8 | 14 | 45.0 | 46.0 | 8 | 7 | 6 | 6.5 | 38.1 | 116 | 128 | 140 | 8 | 6.5 | 57.0 | 69.0 | 5 | 12 | 5 | 6 | 0 |

SPAN (S) = 13 FT  HEIGHT (HT) = 10 FT OR 11 FT OR 12 FT

| DESIGN FILL | MEMBER THICKNESS | | | | TOP SLAB BARS | | | | | | | | | | | | | | | BOTTOM SLAB BARS | | | | | | | | | | | | WALL BARS | | | | |
|---|---|---|---|---|---|---|---|---|---|---|---|---|---|---|---|---|---|---|---|---|---|---|---|---|---|---|---|---|---|---|---|---|---|---|---|
| | | | | | A1 BARS | | J3 BARS | | | K2 | | | H1 BARS | | | | H2 BARS | | | | A2 BARS | | J4 BARS | | | K3 | | | H3 BARS | | | | B1 BARS | | B2 BARS | | |
| | TS | BS | TX | TI | SIZE | SPA. | SIZE | SPA. | C1 | HT=10' | HT=11' | HT=12' | SIZE | SPA. | C5 | Q8 | SIZE | SPA. | C6 | Q9 | SIZE | SPA. | SIZE | SPA. | C4 | HT=10' | HT=11' | HT=12' | SIZE | SPA. | C7 | Q10 | SIZE | SPA. | SIZE | SPA. | G1 |
| 1 FT | 14 | 10 | 9 | 10 | 5 | 6 | 5 | 7 | 66.6 | 34.0 | 34.0 | 34.0 | 5 | 12 | 126.5 | 93.5 | 5 | 12 | 35.0 | 38.0 | 5 | 7 | 6 | 6 | 81.5 | 126 | 138 | 150 | 6 | 6.5 | 57.0 | 60.0 | 5 | 12 | 5 | 9 | 12 |
| 2 FT | 15 | 10 | 10 | 10 | 6 | 8 | 5 | 7.5 | 67.3 | 35.0 | 35.0 | 35.0 | 6 | 16 | 130.5 | 100.5 | 6 | 16 | 41.0 | 44.0 | 5 | 7 | 6 | 6 | 70.1 | 126 | 138 | 150 | 6 | 6 | 56.0 | 58.0 | 5 | 12 | 5 | 9.5 | 12 |
| 4 FT | 11 | 10 | 10 | 10 | 6 | 8 | 5 | 6 | 72.3 | 31.0 | 31.0 | 31.0 | 6 | 15 | 82.0 | 97.0 | 6 | 15 | 38.0 | 39.0 | 5 | 7 | 6 | 6 | 64.6 | 126 | 138 | 150 | 7 | 6.5 | 58.0 | 61.0 | 5 | 9.5 | 5 | 9 | 12 |
| 6 FT | 11 | 11 | 10 | 10 | 5 | 6 | 5 | 6 | 60.5 | 31.0 | 31.0 | 31.0 | 6 | 14 | 64.0 | 71.0 | 6 | 14 | 36.0 | 37.0 | 5 | 6.5 | 6 | 6 | 61.0 | 127 | 139 | 151 | 7 | 6.5 | 57.0 | 61.0 | 5 | 12 | 5 | 9 | 12 |
| 8 FT | 12 | 13 | 10 | 10 | 5 | 6 | 5 | 6 | 56.8 | 32.0 | 32.0 | 32.0 | 6 | 14 | 60.0 | 64.0 | 6 | 14 | 35.0 | 36.0 | 5 | 6 | 6 | 6.5 | 59.1 | 129 | 141 | 153 | 6 | 6 | 52.0 | 59.0 | 5 | 12 | 5 | 8.5 | 0 |
| 10 FT | 13 | 14 | 10 | 10 | 5 | 6 | 6 | 7 | 56.9 | 33.0 | 33.0 | 37.0 | 6 | 13 | 57.0 | 62.0 | 6 | 13 | 34.0 | 36.0 | 6 | 8 | 6 | 6.5 | 56.8 | 130 | 142 | 154 | 6 | 6 | 51.0 | 59.0 | 5 | 12 | 5 | 8 | 0 |
| 12 FT | 14 | 15 | 10 | 10 | 5 | 6 | 6 | 6.5 | 54.6 | 34.0 | 34.0 | 38.0 | 6 | 13 | 55.0 | 61.0 | 6 | 13 | 34.0 | 36.0 | 6 | 7.5 | 6 | 6.5 | 54.9 | 131 | 143 | 155 | 6 | 6 | 51.0 | 59.0 | 5 | 12 | 5 | 8 | 0 |
| 14 FT | 15 | 16 | 10 | 10 | 6 | 8 | 6 | 6.5 | 58.9 | 35.0 | 35.0 | 39.0 | 6 | 13 | 60.0 | 66.0 | 6 | 13 | 39.0 | 42.0 | 6 | 7 | 6 | 6 | 53.5 | 132 | 144 | 156 | 6 | 6 | 50.0 | 59.0 | 5 | 12 | 5 | 8 | 0 |
| 16 FT | 16 | 17 | 11 | 10 | 6 | 7.5 | 6 | 7 | 58.0 | 36.0 | 36.0 | 40.0 | 6 | 12 | 58.0 | 66.0 | 6 | 12 | 39.0 | 42.0 | 6 | 7 | 6 | 7.5 | 52.5 | 133 | 145 | 157 | 6 | 6 | 50.0 | 59.0 | 5 | 12 | 5 | 7.5 | 0 |
| 18 FT | 17 | 18 | 12 | 10 | 6 | 7.5 | 6 | 7 | 57.9 | 37.0 | 37.0 | 41.0 | 6 | 12 | 58.0 | 66.0 | 6 | 12 | 39.0 | 42.0 | 6 | 6 | 6 | 7.5 | 52.0 | 134 | 146 | 158 | 7 | 7 | 53.0 | 62.0 | 5 | 12 | 5 | 7 | 0 |
| 20 FT | 18 | 20 | 12 | 10 | 6 | 7 | 6 | 6.5 | 57.3 | 38.0 | 38.0 | 42.0 | 6 | 12 | 57.0 | 65.0 | 6 | 12 | 39.0 | 42.0 | 6 | 6 | 6 | 7.5 | 51.5 | 136 | 148 | 160 | 6 | 6 | 50.0 | 60.0 | 5 | 12 | 5 | 7 | 0 |
| 22 FT | 19 | 21 | 12 | 10 | 6 | 6 | 6 | 6.5 | 56.8 | 39.0 | 39.0 | 43.0 | 7 | 15 | 62.0 | 70.0 | 7 | 15 | 44.0 | 47.0 | 7 | 8 | 6 | 7 | 51.0 | 137 | 149 | 161 | 7 | 7 | 53.0 | 63.0 | 5 | 12 | 5 | 7 | 0 |
| 24 FT | 21 | 22 | 13 | 10 | 6 | 6 | 6 | 6.5 | 56.9 | 41.0 | 41.0 | 45.0 | 6 | 12 | 56.0 | 65.0 | 6 | 12 | 38.0 | 42.0 | 7 | 7 | 6 | 7.5 | 51.1 | 138 | 150 | 162 | 7 | 7 | 53.0 | 63.0 | 5 | 12 | 5 | 6.5 | 0 |
| 26 FT | 22 | 24 | 13 | 10 | 6 | 6 | 6 | 6.5 | 56.6 | 42.0 | 42.0 | 46.0 | 7 | 15 | 60.0 | 70.0 | 7 | 15 | 43.0 | 46.0 | 7 | 7 | 6 | 7.5 | 50.9 | 140 | 152 | 164 | 7 | 7 | 53.0 | 63.0 | 5 | 12 | 5 | 6.5 | 0 |
| 28 FT | 23 | 25 | 14 | 10 | 7 | 7.5 | 6 | 6.5 | 57.0 | 43.0 | 43.0 | 47.0 | 7 | 15 | 60.0 | 69.0 | 7 | 15 | 43.0 | 46.0 | 7 | 6.5 | 6 | 8 | 51.0 | 141 | 153 | 165 | 7 | 6.5 | 53.0 | 63.0 | 5 | 12 | 5 | 6 | 0 |
| 30 FT | 24 | 26 | 14 | 10 | 7 | 7 | 6 | 6.5 | 56.6 | 44.0 | 44.0 | 48.0 | 7 | 14 | 60.0 | 69.0 | 7 | 14 | 42.0 | 45.0 | 7 | 6.5 | 6 | 7.5 | 50.8 | 142 | 154 | 166 | 7 | 6.5 | 53.0 | 63.0 | 5 | 12 | 5 | 6 | 0 |
| 32 FT | 26 | 28 | 14 | 10 | 7 | 7 | 6 | 6 | 56.5 | 46.0 | 46.0 | 50.0 | 7 | 13 | 59.0 | 69.0 | 7 | 13 | 41.0 | 43.0 | 7 | 6.5 | 6 | 7.5 | 50.8 | 144 | 156 | 168 | 7 | 6 | 53.0 | 63.0 | 5 | 12 | 5 | 6 | 0 |
| 34 FT | 27 | 29 | 15 | 10 | 7 | 6.5 | 6 | 6.5 | 57.1 | 51.0 | 51.0 | 51.0 | 7 | 13 | 59.0 | 68.0 | 7 | 13 | 40.0 | 43.0 | 7 | 6.5 | 6 | 8 | 51.1 | 145 | 157 | 169 | 8 | 7.5 | 59.0 | 70.0 | 5 | 12 | 6 | 8 | 0 |
| 36 FT | 28 | 30 | 15 | 10 | 7 | 6.5 | 6 | 6 | 57.1 | 52.0 | 52.0 | 52.0 | 7 | 12 | 59.0 | 68.0 | 7 | 12 | 40.0 | 42.0 | 7 | 6 | 6 | 7.5 | 51.1 | 146 | 158 | 170 | 8 | 7.5 | 59.0 | 70.0 | 5 | 12 | 6 | 8 | 0 |
| 38 FT | 29 | 31 | 16 | 10 | 7 | 6 | 6 | 6 | 57.8 | 53.0 | 53.0 | 53.0 | 7 | 12 | 59.0 | 68.0 | 7 | 12 | 39.0 | 41.0 | 7 | 6 | 6 | 7.5 | 51.6 | 147 | 159 | 171 | 8 | 7 | 59.0 | 70.0 | 5 | 12 | 6 | 8 | 0 |
| 40 FT | 30 | 32 | 16 | 10 | 7 | 6 | 6 | 6 | 57.8 | 54.0 | 54.0 | 54.0 | 7 | 12 | 59.0 | 67.0 | 7 | 12 | 39.0 | 40.0 | 7 | 6 | 6 | 7.5 | 51.6 | 148 | 160 | 172 | 8 | 7 | 59.0 | 70.0 | 5 | 12 | 6 | 8 | 0 |
| 42 FT | 30 | 33 | 17 | 10 | 7 | 6 | 6 | 6 | 58.5 | 54.0 | 54.0 | 54.0 | 7 | 12 | 59.0 | 67.0 | 7 | 12 | 40.0 | 41.0 | 7 | 6 | 6 | 7 | 51.9 | 149 | 161 | 173 | 8 | 7 | 59.0 | 70.0 | 5 | 12 | 6 | 7.5 | 0 |
| 44 FT | 31 | 34 | 17 | 10 | 8 | 7.5 | 6 | 6 | 57.4 | 55.0 | 55.0 | 55.0 | 8 | 15 | 66.0 | 74.0 | 8 | 15 | 47.0 | 48.0 | 7 | 6 | 6 | 7 | 50.8 | 150 | 162 | 174 | 8 | 7 | 59.0 | 70.0 | 5 | 12 | 6 | 7.5 | 0 |
| 46 FT | 32 | 35 | 17 | 10 | 8 | 7.5 | 6 | 6 | 57.4 | 56.0 | 56.0 | 56.0 | 8 | 14 | 66.0 | 74.0 | 8 | 14 | 46.0 | 48.0 | 8 | 7.5 | 6 | 6.5 | 50.9 | 151 | 163 | 175 | 8 | 7 | 59.0 | 70.0 | 5 | 12 | 6 | 7.5 | 0 |
| 48 FT | 33 | 36 | 17 | 10 | 8 | 7 | 6 | 6 | 57.4 | 57.0 | 57.0 | 57.0 | 8 | 14 | 66.0 | 73.0 | 8 | 14 | 46.0 | 47.0 | 8 | 7.5 | 6 | 6.5 | 51.1 | 152 | 164 | 176 | 8 | 6.5 | 59.0 | 70.0 | 5 | 12 | 6 | 7.5 | 0 |
| 50 FT | 34 | 36 | 18 | 10 | 8 | 7 | 6 | 6 | 58.1 | 58.0 | 58.0 | 58.0 | 8 | 14 | 66.0 | 73.0 | 8 | 14 | 46.0 | 47.0 | 8 | 6.5 | 6 | 6.5 | 51.5 | 152 | 164 | 176 | 8 | 6.5 | 59.0 | 70.0 | 5 | 12 | 6 | 7 | 0 |

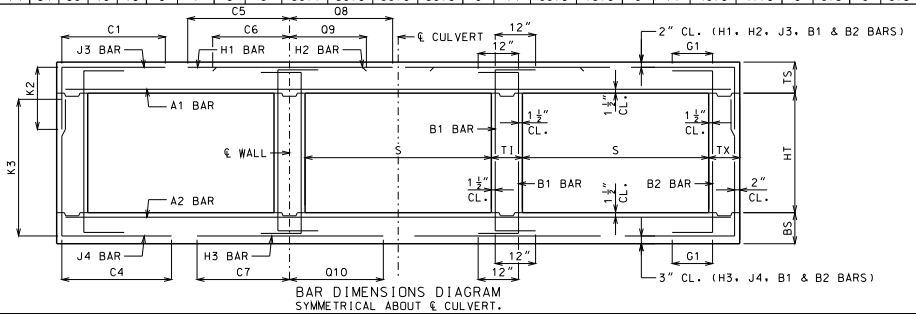


BAR DIMENSIONS DIAGRAM
SYMMETRICAL ABOUT ℄ CULVERT.

GENERAL NOTES:

IF DESIGN FILL IS BETWEEN TABULATED DESIGN FILLS, USE THE NEXT GREATER TABULATED DESIGN FILL, EXCEPT FOR DESIGN FILLS BETWEEN 2 FEET AND 4 FEET. FOR DESIGN FILLS BETWEEN 2 FEET AND 4 FEET USE THE GREATER MEMBER THICKNESS, AREA OF REINFORCEMENT AND BAR DIMENSIONS FROM THE 2 FEET AND 4 FEET TABULATED DESIGN FILLS. AREA OF REINFORCEMENT EQUALS BAR AREA PER FOOT SPACING.

SPECIAL DESIGNS ARE REQUIRED WHEN THE DESIGN FILL IS LESS THAN 1 FOOT OR GREATER THAN 50 FEET.

DIMENSIONS ARE IN INCHES UNLESS OTHERWISE SPECIFIED.

DESIGN FILLS ARE MEASURED FROM THE TOP OF TOP SLAB TO THE TOP OF EARTH FILL OR ROADWAY.

CULVERTS MEET STRENGTH AND SERVICEABILITY REQUIREMENTS FOR THE DESIGN VEHICULAR LIVE LOAD HL-93 MINUS THE LANE LOAD.


MISSOURI HIGHWAYS AND TRANSPORTATION COMMISSION
105 WEST CAPITOL
JEFFERSON CITY, MO 65102
1-888-ASK-MODOT (1-888-275-6636)


STATE OF MISSOURI
DENNIS W. HECKMAN
NUMBER PE-27141
PROFESSIONAL ENGINEER
THIS SHEET HAS BEEN SIGNED, SEALED AND DATED ELECTRONICALLY.

# CONCRETE TRIPLE BOX CULVERT

MEMBER THICKNESS
BAR SIZE, SPACING & DIMENSIONS

SPAN (S): 13 FEET
HEIGHT (HT): 7 THRU 12 FEET

DATE EFFECTIVE: 12/01/2011
DATE PREPARED: 9/29/2011

703.87

SHEET NO.
20 OF 27

IF A SEAL IS PRESENT ON THIS SHEET IT HAS BEEN ELECTRONICALLY SEALED AND DATED.

SPAN (S) = 13 FT  HEIGHT (HT) = 13 FT OR 14 FT

| DESIGN FILL | MEMBER THICKNESS | | | | TOP SLAB BARS | | | | | | | | | | | | | | BOTTOM SLAB BARS | | | | | | | | | | WALL BARS | | | | |
|---|---|---|---|---|---|---|---|---|---|---|---|---|---|---|---|---|---|---|---|---|---|---|---|---|---|---|---|---|---|---|---|---|---|
| | | | | | A1 BARS | | J3 BARS | | | | | H1 BARS | | | | H2 BARS | | | | A2 BARS | | J4 BARS | | | | H3 BARS | | | | B1 BARS | | B2 BARS | |
| | TS | BS | TX | TI | SIZE | SPA. | SIZE | SPA. | C1 | K2 HT=13' | K2 HT=14' | SIZE | SPA. | C5 | Q8 | SIZE | SPA. | C6 | Q9 | SIZE | SPA. | SIZE | SPA. | C4 | K3 HT=13' | K3 HT=14' | SIZE | SPA. | C7 | Q10 | SIZE | SPA. | SIZE | SPA. | G1 |
| 1 FT | 14 | 11 | 10 | 11 | 5 | 6 | 5 | 6 | 67.5 | 34.0 | 34.0 | 5 | 12 | 127.5 | 94.5 | 5 | 12 | 35.0 | 38.0 | 5 | 7 | 6 | 6.5 | 100.1 | 163 | 175 | 5 | 6 | 56.0 | 58.0 | 5 | 12 | 5 | 8 | 12 |
| 2 FT | 15 | 11 | 10 | 11 | 6 | 8 | 5 | 6 | 67.5 | 35.0 | 35.0 | 6 | 16 | 131.5 | 101.5 | 6 | 16 | 41.0 | 44.0 | 5 | 6.5 | 6 | 6 | 88.9 | 163 | 175 | 6 | 6.5 | 57.0 | 60.0 | 5 | 12 | 5 | 8 | 12 |
| 4 FT | 11 | 11 | 11 | 11 | 6 | 8 | 5 | 6 | 68.1 | 31.0 | 31.0 | 6 | 15 | 127.5 | 92.0 | 6 | 15 | 38.0 | 39.0 | 5 | 6.5 | 6 | 6 | 78.6 | 163 | 175 | 6 | 6 | 56.0 | 60.0 | 5 | 12 | 5 | 7.5 | 12 |
| 6 FT | 11 | 12 | 11 | 11 | 5 | 6 | 6 | 7.5 | 75.9 | 31.0 | 35.0 | 6 | 14 | 65.0 | 69.0 | 6 | 14 | 36.0 | 37.0 | 5 | 6 | 6 | 6.5 | 74.6 | 164 | 176 | 6 | 6 | 54.0 | 59.0 | 5 | 12 | 5 | 7.5 | 12 |
| 8 FT | 12 | 13 | 11 | 11 | 5 | 6 | 6 | 7.5 | 70.1 | 32.0 | 36.0 | 6 | 14 | 61.0 | 64.0 | 6 | 14 | 35.0 | 36.0 | 5 | 6 | 6 | 6.5 | 70.9 | 165 | 177 | 6 | 6 | 53.0 | 59.0 | 5 | 12 | 5 | 7.5 | 0 |
| 10 FT | 12 | 14 | 12 | 11 | 5 | 6 | 6 | 7.5 | 65.9 | 36.0 | 36.0 | 6 | 12 | 58.0 | 61.0 | 6 | 12 | 35.0 | 35.0 | 6 | 8 | 6 | 7 | 67.9 | 166 | 178 | 6 | 6 | 52.0 | 59.0 | 5 | 12 | 5 | 7 | 0 |
| 12 FT | 13 | 15 | 12 | 11 | 6 | 8 | 6 | 7 | 64.4 | 37.0 | 37.0 | 6 | 12 | 56.0 | 60.0 | 6 | 12 | 34.0 | 35.0 | 6 | 7.5 | 6 | 7 | 66.3 | 167 | 179 | 6 | 6 | 52.0 | 59.0 | 5 | 12 | 5 | 7 | 0 |
| 14 FT | 15 | 16 | 12 | 11 | 6 | 8 | 6 | 6.5 | 69.9 | 39.0 | 39.0 | 6 | 13 | 60.0 | 66.0 | 6 | 13 | 40.0 | 42.0 | 6 | 7 | 6 | 6 | 64.9 | 168 | 180 | 6 | 6 | 51.0 | 59.0 | 5 | 12 | 5 | 7 | 0 |
| 16 FT | 16 | 17 | 13 | 11 | 6 | 8 | 6 | 6.5 | 68.9 | 40.0 | 40.0 | 6 | 13 | 59.0 | 65.0 | 6 | 13 | 40.0 | 42.0 | 6 | 7 | 6 | 6.5 | 63.8 | 169 | 181 | 6 | 6 | 51.0 | 59.0 | 5 | 12 | 5 | 6.5 | 0 |
| 18 FT | 17 | 19 | 14 | 11 | 6 | 7.5 | 6 | 6.5 | 68.3 | 41.0 | 41.0 | 6 | 12 | 58.0 | 65.0 | 6 | 12 | 40.0 | 42.0 | 6 | 6 | 6 | 6.5 | 63.5 | 171 | 183 | 6 | 6 | 51.0 | 60.0 | 5 | 12 | 5 | 6 | 0 |
| 20 FT | 18 | 20 | 14 | 11 | 6 | 7 | 6 | 6 | 67.5 | 42.0 | 42.0 | 6 | 12 | 58.0 | 65.0 | 6 | 12 | 39.0 | 42.0 | 6 | 6 | 6 | 6.5 | 62.8 | 172 | 184 | 6 | 6 | 51.0 | 60.0 | 5 | 12 | 5 | 6 | 0 |
| 22 FT | 19 | 21 | 14 | 11 | 6 | 6.5 | 6 | 6 | 66.9 | 43.0 | 43.0 | 6 | 12 | 57.0 | 65.0 | 6 | 12 | 39.0 | 42.0 | 7 | 8 | 6 | 6 | 62.1 | 173 | 185 | 7 | 7 | 54.0 | 63.0 | 5 | 12 | 5 | 6 | 0 |
| 24 FT | 20 | 22 | 16 | 11 | 6 | 6 | 6 | 6 | 67.3 | 44.0 | 44.0 | 7 | 15 | 62.0 | 69.0 | 7 | 15 | 44.0 | 47.0 | 7 | 7 | 6 | 6.5 | 61.8 | 174 | 186 | 7 | 7 | 54.0 | 63.0 | 5 | 12 | 6 | 8 | 0 |
| 26 FT | 22 | 24 | 16 | 11 | 6 | 6 | 6 | 6 | 67.1 | 46.0 | 46.0 | 7 | 15 | 61.0 | 69.0 | 7 | 15 | 43.0 | 46.0 | 7 | 7 | 6 | 7 | 61.8 | 176 | 188 | 7 | 7 | 54.0 | 63.0 | 5 | 12 | 6 | 8 | 0 |
| 28 FT | 23 | 25 | 16 | 11 | 7 | 7.5 | 7 | 8 | 71.6 | 47.0 | 47.0 | 7 | 15 | 61.0 | 69.0 | 7 | 15 | 43.0 | 46.0 | 7 | 6.5 | 6 | 6.5 | 61.4 | 177 | 189 | 7 | 6.5 | 54.0 | 63.0 | 5 | 12 | 6 | 8 | 0 |
| 30 FT | 24 | 26 | 16 | 11 | 7 | 7.5 | 7 | 7 | 71.3 | 48.0 | 48.0 | 7 | 14 | 60.0 | 69.0 | 7 | 14 | 42.0 | 45.0 | 7 | 6.5 | 6 | 6 | 61.0 | 178 | 190 | 7 | 6.5 | 54.0 | 63.0 | 5 | 12 | 6 | 8 | 0 |
| 32 FT | 25 | 28 | 17 | 11 | 7 | 7 | 7 | 7.5 | 71.6 | 49.0 | 49.0 | 7 | 14 | 60.0 | 68.0 | 7 | 14 | 42.0 | 45.0 | 7 | 6.5 | 6 | 6.5 | 61.1 | 180 | 192 | 7 | 6 | 54.0 | 64.0 | 5 | 12 | 6 | 7.5 | 0 |
| 34 FT | 26 | 29 | 17 | 11 | 7 | 6.5 | 7 | 6.5 | 71.4 | 50.0 | 50.0 | 7 | 13 | 60.0 | 68.0 | 7 | 13 | 42.0 | 44.0 | 7 | 6.5 | 6 | 6.5 | 61.0 | 181 | 193 | 8 | 7.5 | 60.0 | 70.0 | 5 | 12 | 6 | 7.5 | 0 |
| 36 FT | 27 | 30 | 18 | 11 | 7 | 6.5 | 7 | 7 | 72.0 | 51.0 | 51.0 | 7 | 13 | 60.0 | 68.0 | 7 | 13 | 41.0 | 43.0 | 7 | 6 | 6 | 6.5 | 61.3 | 182 | 194 | 8 | 7.5 | 60.0 | 70.0 | 5 | 12 | 6 | 7 | 0 |
| 38 FT | 28 | 31 | 19 | 11 | 7 | 6.5 | 7 | 7.5 | 72.5 | 52.0 | 52.0 | 7 | 12 | 59.0 | 67.0 | 7 | 12 | 41.0 | 43.0 | 7 | 6 | 6 | 6.5 | 61.5 | 183 | 195 | 8 | 7 | 60.0 | 70.0 | 5 | 12 | 6 | 6.5 | 0 |
| 40 FT | 29 | 32 | 19 | 11 | 7 | 6 | 7 | 6.5 | 72.6 | 53.0 | 53.0 | 7 | 12 | 59.0 | 67.0 | 7 | 12 | 40.0 | 42.0 | 7 | 6 | 6 | 6 | 61.5 | 184 | 196 | 8 | 7 | 60.0 | 70.0 | 5 | 12 | 6 | 6.5 | 0 |
| 42 FT | 30 | 33 | 20 | 11 | 7 | 6 | 7 | 7 | 73.3 | 54.0 | 54.0 | 7 | 12 | 59.0 | 66.0 | 7 | 12 | 39.0 | 41.0 | 7 | 6 | 6 | 6 | 61.9 | 185 | 197 | 8 | 7 | 60.0 | 70.0 | 5 | 12 | 6 | 6.5 | 0 |
| 44 FT | 31 | 34 | 20 | 11 | 8 | 7.5 | 7 | 7 | 71.6 | 55.0 | 55.0 | 8 | 15 | 67.0 | 73.0 | 8 | 15 | 47.0 | 48.0 | 7 | 6 | 6 | 6 | 60.1 | 186 | 198 | 8 | 7 | 60.0 | 70.0 | 5 | 12 | 6 | 6.5 | 0 |
| 46 FT | 32 | 35 | 20 | 11 | 8 | 7.5 | 7 | 6.5 | 71.6 | 56.0 | 56.0 | 8 | 15 | 67.0 | 73.0 | 8 | 15 | 46.0 | 48.0 | 8 | 7.5 | 6 | 6 | 60.3 | 187 | 199 | 8 | 7 | 60.0 | 70.0 | 5 | 12 | 6 | 6.5 | 0 |
| 48 FT | 32 | 36 | 21 | 11 | 8 | 7 | 7 | 7 | 72.4 | 56.0 | 56.0 | 8 | 14 | 67.0 | 73.0 | 8 | 14 | 47.0 | 48.0 | 8 | 7.5 | 6 | 6 | 60.5 | 188 | 200 | 8 | 6.5 | 60.0 | 70.0 | 5 | 12 | 6 | 6 | 0 |
| 50 FT | 33 | 36 | 22 | 11 | 8 | 7 | 7 | 7 | 73.1 | 57.0 | 63.0 | 8 | 14 | 66.0 | 72.0 | 8 | 14 | 46.0 | 47.0 | 8 | 6.5 | 7 | 7.5 | 63.8 | 188 | 200 | 8 | 6.5 | 60.0 | 70.0 | 5 | 12 | 6 | 6 | 0 |

SPAN (S) = 13 FT  HEIGHT (HT) = 15 FT OR 16 FT

| DESIGN FILL | MEMBER THICKNESS | | | | TOP SLAB BARS | | | | | | | | | | | | | | BOTTOM SLAB BARS | | | | | | | | | | WALL BARS | | | | |
|---|---|---|---|---|---|---|---|---|---|---|---|---|---|---|---|---|---|---|---|---|---|---|---|---|---|---|---|---|---|---|---|---|---|
| | | | | | A1 BARS | | J3 BARS | | | | | H1 BARS | | | | H2 BARS | | | | A2 BARS | | J4 BARS | | | | H3 BARS | | | | B1 BARS | | B2 BARS | |
| | TS | BS | TX | TI | SIZE | SPA. | SIZE | SPA. | C1 | K2 HT=15' | K2 HT=16' | SIZE | SPA. | C5 | Q8 | SIZE | SPA. | C6 | Q9 | SIZE | SPA. | SIZE | SPA. | C4 | K3 HT=15' | K3 HT=16' | SIZE | SPA. | C7 | Q10 | SIZE | SPA. | SIZE | SPA. | G1 |
| 1 FT | 14 | 11 | 12 | 13 | 5 | 6 | 5 | 6 | 69.0 | 34.0 | 34.0 | 5 | 12 | 128.5 | 95.5 | 5 | 12 | 35.0 | 37.0 | 5 | 6.5 | 6 | 6.5 | 103.3 | 187 | 199 | 6 | 7 | 60.0 | 61.0 | 5 | 10.5 | 5 | 7 | 12 |
| 2 FT | 15 | 11 | 12 | 13 | 6 | 8 | 6 | 8 | 72.0 | 35.0 | 39.0 | 6 | 16 | 135.5 | 102.5 | 6 | 16 | 41.0 | 44.0 | 5 | 6.5 | 6 | 6 | 95.4 | 187 | 199 | 6 | 6.5 | 58.0 | 59.0 | 5 | 12 | 5 | 7 | 12 |
| 4 FT | 11 | 11 | 12 | 13 | 6 | 8 | 6 | 7 | 72.0 | 35.0 | 35.0 | 6 | 15 | 130.5 | 82.0 | 6 | 15 | 39.0 | 39.0 | 5 | 6.5 | 7 | 6 | 92.5 | 187 | 199 | 6 | 6 | 57.0 | 59.0 | 5 | 12 | 5 | 6.5 | 12 |
| 6 FT | 11 | 12 | 12 | 13 | 5 | 6 | 6 | 6.5 | 90.4 | 35.0 | 35.0 | 6 | 14 | 65.0 | 66.0 | 6 | 14 | 37.0 | 37.0 | 5 | 6 | 7 | 6 | 88.9 | 188 | 200 | 6 | 6 | 56.0 | 59.0 | 5 | 12 | 5 | 6.5 | 12 |
| 8 FT | 11 | 13 | 13 | 13 | 5 | 6 | 6 | 6.5 | 78.1 | 35.0 | 35.0 | 6 | 13 | 60.0 | 62.0 | 6 | 13 | 36.0 | 36.0 | 5 | 6 | 6 | 6 | 82.4 | 189 | 201 | 6 | 6 | 55.0 | 59.0 | 5 | 12 | 5 | 6.5 | 0 |
| 10 FT | 12 | 14 | 13 | 13 | 5 | 6 | 6 | 6.5 | 76.0 | 36.0 | 36.0 | 6 | 13 | 58.0 | 60.0 | 6 | 13 | 35.0 | 36.0 | 6 | 8 | 6 | 6 | 80.4 | 190 | 202 | 6 | 6 | 54.0 | 59.0 | 5 | 12 | 5 | 6 | 0 |
| 12 FT | 13 | 15 | 14 | 13 | 5 | 6 | 6 | 6.5 | 73.3 | 37.0 | 37.0 | 6 | 12 | 57.0 | 59.0 | 6 | 12 | 35.0 | 36.0 | 6 | 7.5 | 6 | 6 | 77.5 | 191 | 203 | 6 | 6 | 53.0 | 59.0 | 5 | 12 | 5 | 6 | 0 |
| 14 FT | 14 | 16 | 14 | 13 | 6 | 8 | 6 | 6 | 72.3 | 38.0 | 38.0 | 6 | 12 | 55.0 | 59.0 | 6 | 12 | 35.0 | 36.0 | 6 | 7 | 6 | 6 | 76.3 | 192 | 204 | 7 | 7 | 55.0 | 62.0 | 5 | 12 | 5 | 6 | 0 |
| 16 FT | 15 | 17 | 16 | 13 | 6 | 7.5 | 6 | 6.5 | 76.6 | 39.0 | 39.0 | 6 | 12 | 60.0 | 64.0 | 6 | 12 | 41.0 | 42.0 | 6 | 6.5 | 6 | 6.5 | 73.3 | 193 | 205 | 7 | 7 | 55.0 | 62.0 | 5 | 12 | 6 | 8 | 0 |
| 18 FT | 16 | 19 | 16 | 13 | 6 | 7 | 6 | 6 | 76.3 | 40.0 | 40.0 | 6 | 12 | 59.0 | 64.0 | 6 | 12 | 40.0 | 42.0 | 6 | 6 | 6 | 6 | 74.1 | 195 | 207 | 6 | 6 | 52.0 | 60.0 | 5 | 12 | 6 | 8 | 0 |
| 20 FT | 18 | 20 | 16 | 13 | 6 | 7 | 6 | 6 | 76.8 | 42.0 | 42.0 | 6 | 12 | 59.0 | 64.0 | 6 | 12 | 40.0 | 42.0 | 6 | 6 | 6 | 6 | 73.0 | 196 | 208 | 6 | 6 | 52.0 | 60.0 | 5 | 12 | 6 | 8 | 0 |
| 22 FT | 19 | 21 | 17 | 13 | 6 | 6.5 | 6 | 6 | 76.4 | 43.0 | 43.0 | 6 | 12 | 58.0 | 64.0 | 6 | 12 | 40.0 | 42.0 | 7 | 7.5 | 7 | 7.5 | 75.1 | 197 | 209 | 7 | 7 | 55.0 | 63.0 | 5 | 12 | 6 | 7.5 | 0 |
| 24 FT | 20 | 23 | 17 | 13 | 6 | 6.5 | 7 | 7.5 | 81.1 | 44.0 | 50.0 | 6 | 12 | 58.0 | 64.0 | 6 | 12 | 40.0 | 42.0 | 7 | 7 | 7 | 7 | 75.4 | 199 | 211 | 7 | 7 | 55.0 | 63.0 | 5 | 12 | 6 | 7.5 | 0 |
| 26 FT | 22 | 24 | 18 | 13 | 6 | 6 | 7 | 7.5 | 81.5 | 46.0 | 52.0 | 7 | 15 | 62.0 | 69.0 | 7 | 15 | 44.0 | 46.0 | 7 | 7 | 7 | 7.5 | 74.9 | 200 | 212 | 7 | 7 | 55.0 | 63.0 | 5 | 12 | 6 | 7 | 0 |
| 28 FT | 23 | 25 | 18 | 13 | 7 | 7.5 | 7 | 6.5 | 81.3 | 47.0 | 53.0 | 7 | 15 | 62.0 | 69.0 | 7 | 15 | 43.0 | 46.0 | 7 | 6.5 | 7 | 6.5 | 74.6 | 201 | 213 | 7 | 6.5 | 55.0 | 63.0 | 5 | 12 | 6 | 7 | 0 |
| 30 FT | 24 | 26 | 19 | 13 | 7 | 7.5 | 7 | 7 | 81.3 | 48.0 | 54.0 | 7 | 14 | 61.0 | 69.0 | 7 | 14 | 43.0 | 46.0 | 7 | 6.5 | 7 | 7 | 74.4 | 202 | 214 | 7 | 6.5 | 55.0 | 63.0 | 5 | 12 | 6 | 6.5 | 0 |
| 32 FT | 25 | 28 | 20 | 13 | 7 | 7 | 7 | 7 | 81.4 | 49.0 | 55.0 | 7 | 14 | 61.0 | 68.0 | 7 | 14 | 42.0 | 45.0 | 7 | 6.5 | 7 | 7.5 | 74.6 | 204 | 216 | 7 | 6 | 55.0 | 64.0 | 5 | 12 | 6 | 6.5 | 0 |
| 34 FT | 26 | 29 | 21 | 13 | 7 | 7 | 7 | 7 | 81.6 | 50.0 | 56.0 | 7 | 13 | 61.0 | 68.0 | 7 | 13 | 42.0 | 44.0 | 7 | 6.5 | 7 | 7.5 | 74.5 | 205 | 217 | 8 | 7.5 | 61.0 | 70.0 | 5 | 12 | 6 | 6 | 0 |
| 36 FT | 27 | 30 | 22 | 13 | 7 | 6.5 | 7 | 7 | 82.0 | 57.0 | 57.0 | 7 | 13 | 60.0 | 68.0 | 7 | 13 | 42.0 | 44.0 | 7 | 6 | 7 | 7.5 | 74.8 | 206 | 218 | 8 | 7.5 | 61.0 | 70.0 | 5 | 12 | 6 | 6 | 0 |
| 38 FT | 28 | 31 | 22 | 13 | 7 | 6.5 | 7 | 6.5 | 82.1 | 58.0 | 58.0 | 7 | 12 | 60.0 | 67.0 | 7 | 12 | 41.0 | 43.0 | 7 | 6 | 7 | 7 | 74.8 | 207 | 219 | 8 | 7 | 61.0 | 70.0 | 5 | 12 | 6 | 6 | 0 |
| 40 FT | 29 | 32 | 23 | 13 | 7 | 6 | 7 | 6.5 | 82.6 | 59.0 | 59.0 | 7 | 12 | 60.0 | 67.0 | 7 | 12 | 41.0 | 42.0 | 7 | 6 | 7 | 7 | 75.0 | 208 | 220 | 8 | 7 | 61.0 | 70.0 | 5 | 12 | 7 | 7.5 | 0 |
| 42 FT | 30 | 33 | 24 | 13 | 7 | 6 | 7 | 6.5 | 83.3 | 60.0 | 60.0 | 7 | 12 | 60.0 | 66.0 | 7 | 12 | 40.0 | 42.0 | 7 | 6 | 7 | 7 | 75.3 | 209 | 221 | 8 | 7 | 61.0 | 70.0 | 5 | 12 | 7 | 7.5 | 0 |
| 44 FT | 31 | 34 | 24 | 13 | 7 | 6 | 7 | 7 | 81.8 | 61.0 | 61.0 | 8 | 15 | 68.0 | 74.0 | 8 | 15 | 47.0 | 49.0 | 7 | 6 | 7 | 7 | 73.5 | 210 | 222 | 8 | 7 | 61.0 | 70.0 | 5 | 12 | 7 | 7.5 | 0 |
| 46 FT | 31 | 35 | 24 | 13 | 8 | 7.5 | 7 | 6 | 81.6 | 61.0 | 61.0 | 8 | 15 | 68.0 | 74.0 | 8 | 15 | 48.0 | 49.0 | 8 | 7.5 | 7 | 7 | 73.8 | 211 | 223 | 8 | 7 | 61.0 | 70.0 | 5 | 12 | 7 | 7.5 | 0 |
| 48 FT | 32 | 36 | 25 | 13 | 8 | 7.5 | 7 | 6 | 82.4 | 62.0 | 62.0 | 8 | 14 | 67.0 | 73.0 | 8 | 14 | 47.0 | 49.0 | 8 | 7.5 | 7 | 7 | 74.1 | 212 | 224 | 8 | 6.5 | 61.0 | 71.0 | 5 | 12 | 7 | 7.5 | 0 |
| 50 FT | 33 | 37 | 26 | 13 | 8 | 7 | 7 | 6 | 83.1 | 63.0 | 63.0 | 8 | 14 | 67.0 | 72.0 | 8 | 14 | 47.0 | 48.0 | 8 | 7.5 | 7 | 6.5 | 74.5 | 213 | 225 | 8 | 6.5 | 61.0 | 71.0 | 5 | 12 | 7 | 7.5 | 0 |

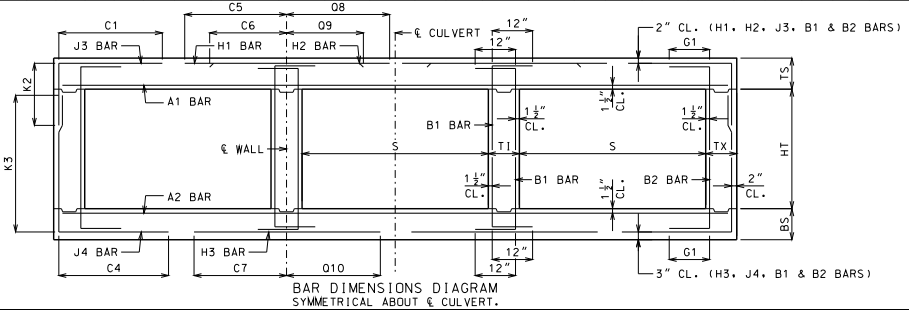


BAR DIMENSIONS DIAGRAM
SYMMETRICAL ABOUT ℄ CULVERT.

GENERAL NOTES:

IF DESIGN FILL IS BETWEEN TABULATED DESIGN FILLS, USE THE NEXT GREATER TABULATED DESIGN FILL, EXCEPT FOR DESIGN FILLS BETWEEN 2 FEET AND 4 FEET. FOR DESIGN FILLS BETWEEN 2 FEET AND 4 FEET USE THE GREATER MEMBER THICKNESS, AREA OF REINFORCEMENT AND BAR DIMENSIONS FROM THE 2 FEET AND 4 FEET TABULATED DESIGN FILLS. AREA OF REINFORCEMENT EQUALS BAR AREA PER FOOT SPACING.

SPECIAL DESIGNS ARE REQUIRED WHEN THE DESIGN FILL IS LESS THAN 1 FOOT OR GREATER THAN 50 FEET.

DIMENSIONS ARE IN INCHES UNLESS OTHERWISE SPECIFIED.

DESIGN FILLS ARE MEASURED FROM THE TOP OF TOP SLAB TO THE TOP OF EARTH FILL OR ROADWAY.

CULVERTS MEET STRENGTH AND SERVICEABILITY REQUIREMENTS FOR THE DESIGN VEHICULAR LIVE LOAD HL-93 MINUS THE LANE LOAD.


MISSOURI HIGHWAYS AND TRANSPORTATION COMMISSION
105 WEST CAPITOL
JEFFERSON CITY, MO 65102
1-888-ASK-MODOT (1-888-275-6636)


STATE OF MISSOURI
DENNIS W. HECKMAN
NUMBER PE-27141
PROFESSIONAL ENGINEER
THIS SHEET HAS BEEN SIGNED, SEALED AND DATED ELECTRONICALLY.

# CONCRETE TRIPLE BOX CULVERT

MEMBER THICKNESS
BAR SIZE, SPACING & DIMENSIONS

SPAN (S): 13 FEET
HEIGHT (HT): 13 THRU 16 FEET

DATE EFFECTIVE: 12/01/2011
DATE PREPARED: 9/29/2011

703.87

SHEET NO.
21 OF 27

IF A SEAL IS PRESENT ON THIS SHEET IT HAS BEEN ELECTRONICALLY SEALED AND DATED.

SPAN (S) = 14 FT  HEIGHT (HT) = 7 FT OR 8 FT OR 9 FT

| DESIGN FILL | MEMBER THICKNESS | | | | TOP SLAB BARS | | | | | | | | | | | | | | BOTTOM SLAB BARS | | | | | | | | | | | | WALL BARS | | | | |
|---|---|---|---|---|---|---|---|---|---|---|---|---|---|---|---|---|---|---|---|---|---|---|---|---|---|---|---|---|---|---|---|---|---|---|---|
| | | | | | A1 BARS | | J3 BARS | | | K2 | | | H1 BARS | | | | H2 BARS | | | | A2 BARS | | J4 BARS | | | K3 | | | H3 BARS | | | | B1 BARS | | B2 BARS | | |
| | TS | BS | TX | TI | SIZE | SPA. | SIZE | SPA. | C1 | HT=7' | HT=8' | HT=9' | SIZE | SPA. | C5 | Q8 | SIZE | SPA. | C6 | Q9 | SIZE | SPA. | SIZE | SPA. | C4 | HT=7' | HT=8' | HT=9' | SIZE | SPA. | C7 | Q10 | SIZE | SPA. | SIZE | SPA. | G1 |
| 1 FT | 14 | 10 | 8 | 8 | 6 | 8.5 | 5 | 8.5 | 69.3 | 34.0 | 34.0 | 34.0 | 5 | 12 | 133.5 | 98.5 | 5 | 12 | 39.0 | 43.0 | 5 | 7 | 6 | 7 | 60.9 | 90 | 102 | 114 | 6 | 6.5 | 58.0 | 63.0 | 5 | 12 | 5 | 12 | 12 |
| 2 FT | 15 | 10 | 8 | 8 | 6 | 8 | 5 | 8 | 69.3 | 35.0 | 35.0 | 35.0 | 6 | 16 | 137.5 | 105.5 | 6 | 16 | 45.0 | 49.0 | 5 | 7 | 6 | 6 | 54.8 | 90 | 102 | 114 | 7 | 7 | 60.0 | 64.0 | 5 | 12 | 5 | 12 | 12 |
| 4 FT | 12 | 11 | 8 | 8 | 6 | 7.5 | 5 | 6 | 52.4 | 32.0 | 32.0 | 32.0 | 6 | 14 | 80.0 | 103.0 | 6 | 14 | 39.0 | 42.0 | 5 | 6.5 | 6 | 7 | 49.1 | 91 | 103 | 115 | 6 | 6 | 56.0 | 62.0 | 5 | 12 | 5 | 12 | 12 |
| 6 FT | 12 | 12 | 8 | 8 | 6 | 8 | 6 | 7.5 | 48.9 | 32.0 | 32.0 | 32.0 | 6 | 13 | 66.0 | 81.0 | 6 | 13 | 37.0 | 39.0 | 5 | 6 | 5 | 6 | 42.1 | 92 | 104 | 116 | 7 | 7 | 57.0 | 65.0 | 5 | 12 | 5 | 12 | 12 |
| 8 FT | 12 | 13 | 8 | 8 | 6 | 7.5 | 6 | 7 | 45.5 | 32.0 | 32.0 | 32.0 | 6 | 12 | 61.0 | 69.0 | 6 | 12 | 35.0 | 37.0 | 6 | 8.5 | 5 | 6 | 39.1 | 93 | 105 | 117 | 7 | 7 | 56.0 | 66.0 | 5 | 12 | 5 | 12 | 0 |
| 10 FT | 13 | 14 | 9 | 8 | 6 | 7 | 5 | 6 | 41.3 | 33.0 | 33.0 | 33.0 | 7 | 15 | 61.0 | 69.0 | 7 | 15 | 38.0 | 40.0 | 6 | 8 | 5 | 7 | 38.4 | 94 | 106 | 118 | 7 | 6.5 | 55.0 | 65.0 | 5 | 12 | 5 | 12 | 0 |
| 12 FT | 15 | 16 | 9 | 8 | 6 | 7.5 | 5 | 6.5 | 43.5 | 35.0 | 35.0 | 35.0 | 6 | 12 | 62.0 | 71.0 | 6 | 12 | 40.0 | 43.0 | 6 | 7 | 5 | 8 | 36.8 | 96 | 108 | 120 | 6 | 6 | 52.0 | 63.0 | 5 | 12 | 5 | 12 | 0 |
| 14 FT | 16 | 17 | 9 | 8 | 6 | 7 | 5 | 6 | 41.9 | 36.0 | 36.0 | 36.0 | 6 | 12 | 61.0 | 70.0 | 6 | 12 | 40.0 | 43.0 | 6 | 7 | 5 | 7.5 | 35.8 | 97 | 109 | 121 | 7 | 7 | 54.0 | 66.0 | 5 | 12 | 5 | 12 | 0 |
| 16 FT | 17 | 18 | 9 | 8 | 6 | 7 | 5 | 6 | 40.8 | 37.0 | 37.0 | 37.0 | 7 | 15 | 65.0 | 75.0 | 7 | 15 | 44.0 | 48.0 | 6 | 6.5 | 5 | 7 | 34.9 | 98 | 110 | 122 | 7 | 7 | 54.0 | 66.0 | 5 | 12 | 5 | 12 | 0 |
| 18 FT | 18 | 20 | 9 | 8 | 6 | 6.5 | 6 | 8 | 44.0 | 38.0 | 38.0 | 38.0 | 7 | 15 | 64.0 | 75.0 | 7 | 15 | 44.0 | 47.0 | 6 | 6 | 5 | 7 | 34.0 | 100 | 112 | 124 | 7 | 7 | 54.0 | 66.0 | 5 | 12 | 5 | 10 | 0 |
| 20 FT | 20 | 21 | 9 | 8 | 6 | 6.5 | 5 | 6 | 38.9 | 40.0 | 40.0 | 40.0 | 7 | 15 | 63.0 | 75.0 | 7 | 15 | 44.0 | 48.0 | 7 | 8 | 5 | 6.5 | 33.9 | 101 | 113 | 125 | 7 | 7 | 54.0 | 66.0 | 5 | 12 | 5 | 9 | 0 |
| 22 FT | 21 | 22 | 9 | 8 | 6 | 6 | 6 | 8 | 42.4 | 41.0 | 41.0 | 41.0 | 7 | 14 | 63.0 | 74.0 | 7 | 14 | 44.0 | 47.0 | 7 | 7 | 5 | 6 | 33.5 | 102 | 114 | 126 | 7 | 6.5 | 54.0 | 66.0 | 5 | 12 | 5 | 8.5 | 0 |
| 24 FT | 23 | 24 | 9 | 8 | 7 | 7.5 | 6 | 7 | 42.0 | 47.0 | 47.0 | 47.0 | 7 | 15 | 62.0 | 74.0 | 7 | 15 | 44.0 | 47.0 | 7 | 7 | 6 | 7 | 36.4 | 104 | 116 | 128 | 7 | 7 | 54.0 | 66.0 | 5 | 12 | 5 | 8.5 | 0 |
| 26 FT | 24 | 25 | 9 | 8 | 7 | 7.5 | 6 | 7 | 41.6 | 48.0 | 48.0 | 48.0 | 7 | 14 | 62.0 | 74.0 | 7 | 14 | 43.0 | 47.0 | 7 | 6.5 | 6 | 7 | 36.1 | 105 | 117 | 129 | 7 | 6.5 | 54.0 | 66.0 | 5 | 12 | 5 | 8.5 | 0 |
| 28 FT | 25 | 26 | 9 | 8 | 7 | 7 | 6 | 6 | 41.4 | 49.0 | 49.0 | 49.0 | 7 | 14 | 61.0 | 73.0 | 7 | 14 | 43.0 | 47.0 | 7 | 6 | 6 | 6.5 | 35.9 | 106 | 118 | 130 | 7 | 6 | 54.0 | 66.0 | 5 | 12 | 5 | 7.5 | 0 |
| 30 FT | 27 | 28 | 10 | 8 | 7 | 6.5 | 6 | 7 | 42.3 | 51.0 | 51.0 | 51.0 | 7 | 13 | 61.0 | 73.0 | 7 | 13 | 42.0 | 45.0 | 7 | 6 | 6 | 7 | 36.5 | 108 | 120 | 132 | 7 | 6 | 54.0 | 67.0 | 5 | 12 | 5 | 8 | 0 |
| 32 FT | 28 | 29 | 10 | 8 | 7 | 6.5 | 6 | 6.5 | 42.0 | 52.0 | 52.0 | 52.0 | 7 | 12 | 61.0 | 73.0 | 7 | 12 | 41.0 | 44.0 | 7 | 6 | 6 | 6.5 | 36.4 | 109 | 121 | 133 | 8 | 7.5 | 60.0 | 73.0 | 5 | 12 | 5 | 7.5 | 0 |
| 34 FT | 29 | 30 | 10 | 8 | 7 | 6 | 6 | 6 | 41.9 | 53.0 | 53.0 | 53.0 | 7 | 12 | 61.0 | 72.0 | 7 | 12 | 41.0 | 44.0 | 8 | 7 | 6 | 6.5 | 36.4 | 110 | 122 | 134 | 8 | 7 | 60.0 | 73.0 | 5 | 12 | 5 | 7 | 0 |
| 36 FT | 30 | 32 | 11 | 8 | 7 | 6 | 6 | 7 | 42.9 | 54.0 | 54.0 | 54.0 | 7 | 12 | 61.0 | 72.0 | 7 | 12 | 41.0 | 43.0 | 7 | 6 | 6 | 6.5 | 36.9 | 112 | 124 | 136 | 8 | 7 | 60.0 | 73.0 | 5 | 12 | 5 | 7.5 | 0 |
| 38 FT | 31 | 33 | 11 | 8 | 8 | 7.5 | 6 | 6.5 | 42.9 | 55.0 | 55.0 | 55.0 | 8 | 15 | 68.0 | 79.0 | 8 | 15 | 48.0 | 51.0 | 8 | 7.5 | 6 | 6.5 | 37.0 | 113 | 125 | 137 | 8 | 6.5 | 60.0 | 73.0 | 5 | 12 | 5 | 7 | 0 |
| 40 FT | 32 | 34 | 11 | 8 | 8 | 7.5 | 6 | 6.5 | 42.9 | 56.0 | 56.0 | 56.0 | 8 | 14 | 68.0 | 79.0 | 8 | 14 | 48.0 | 50.0 | 8 | 7.5 | 6 | 6 | 37.1 | 114 | 126 | 138 | 8 | 6.5 | 60.0 | 73.0 | 5 | 12 | 5 | 6.5 | 0 |
| 42 FT | 33 | 35 | 12 | 8 | 8 | 7 | 6 | 7 | 43.8 | 57.0 | 57.0 | 57.0 | 8 | 14 | 68.0 | 78.0 | 8 | 14 | 47.0 | 49.0 | 8 | 7 | 6 | 6.5 | 37.6 | 115 | 127 | 139 | 8 | 6.5 | 60.0 | 73.0 | 5 | 12 | 5 | 7 | 0 |
| 44 FT | 34 | 36 | 12 | 8 | 8 | 7 | 6 | 6.5 | 43.8 | 58.0 | 58.0 | 58.0 | 8 | 14 | 68.0 | 78.0 | 8 | 14 | 47.0 | 48.0 | 8 | 7 | 6 | 6.5 | 37.8 | 116 | 128 | 140 | 8 | 6 | 60.0 | 73.0 | 5 | 12 | 5 | 6.5 | 0 |
| 46 FT | 35 | 37 | 12 | 8 | 8 | 6.5 | 6 | 6.5 | 42.9 | 59.0 | 59.0 | 59.0 | 8 | 13 | 67.0 | 77.0 | 8 | 13 | 46.0 | 47.0 | 8 | 7 | 6 | 6.5 | 37.0 | 117 | 129 | 141 | 8 | 6 | 60.0 | 73.0 | 5 | 12 | 5 | 6.5 | 0 |
| 48 FT | 36 | 38 | 12 | 8 | 8 | 6.5 | 6 | 6.5 | 43.0 | 60.0 | 60.0 | 60.0 | 8 | 13 | 67.0 | 76.0 | 8 | 13 | 46.0 | 47.0 | 8 | 7 | 6 | 6 | 37.1 | 118 | 130 | 142 | 8 | 6 | 60.0 | 73.0 | 5 | 12 | 5 | 6 | 0 |
| 50 FT | 37 | 39 | 12 | 8 | 8 | 6.5 | 6 | 6 | 43.1 | 61.0 | 61.0 | 61.0 | 8 | 13 | 67.0 | 75.0 | 8 | 13 | 46.0 | 47.0 | 8 | 7 | 6 | 6 | 37.4 | 119 | 131 | 143 | 8 | 6 | 60.0 | 73.0 | 5 | 12 | 5 | 6 | 0 |

SPAN (S) = 14 FT  HEIGHT (HT) = 10 FT OR 11 FT OR 12 FT

| DESIGN FILL | MEMBER THICKNESS | | | | TOP SLAB BARS | | | | | | | | | | | | | | BOTTOM SLAB BARS | | | | | | | | | | | | WALL BARS | | | | |
|---|---|---|---|---|---|---|---|---|---|---|---|---|---|---|---|---|---|---|---|---|---|---|---|---|---|---|---|---|---|---|---|---|---|---|---|
| | | | | | A1 BARS | | J3 BARS | | | K2 | | | H1 BARS | | | | H2 BARS | | | | A2 BARS | | J4 BARS | | | K3 | | | H3 BARS | | | | B1 BARS | | B2 BARS | | |
| | TS | BS | TX | TI | SIZE | SPA. | SIZE | SPA. | C1 | HT=10' | HT=11' | HT=12' | SIZE | SPA. | C5 | Q8 | SIZE | SPA. | C6 | Q9 | SIZE | SPA. | SIZE | SPA. | C4 | HT=10' | HT=11' | HT=12' | SIZE | SPA. | C7 | Q10 | SIZE | SPA. | SIZE | SPA. | G1 |
| 1 FT | 14 | 10 | 9 | 10 | 6 | 8.5 | 5 | 7 | 70.3 | 34.0 | 34.0 | 34.0 | 5 | 12 | 134.5 | 99.5 | 5 | 12 | 39.0 | 43.0 | 5 | 7 | 6 | 6 | 80.1 | 126 | 138 | 150 | 6 | 6 | 60.0 | 63.0 | 5 | 10.5 | 5 | 9 | 12 |
| 2 FT | 15 | 11 | 9 | 10 | 6 | 8 | 5 | 7 | 70.3 | 35.0 | 35.0 | 35.0 | 6 | 16 | 138.5 | 106.5 | 6 | 16 | 45.0 | 48.0 | 5 | 6.5 | 6 | 6 | 73.6 | 127 | 139 | 151 | 6 | 6.5 | 59.0 | 62.0 | 5 | 12 | 5 | 9 | 12 |
| 4 FT | 11 | 11 | 11 | 10 | 6 | 7 | 5 | 6 | 66.6 | 31.0 | 31.0 | 31.0 | 6 | 13 | 81.0 | 94.0 | 6 | 13 | 39.0 | 40.0 | 5 | 6.5 | 5 | 6 | 61.8 | 127 | 139 | 151 | 7 | 7 | 61.0 | 65.0 | 5 | 9.5 | 5 | 10 | 12 |
| 6 FT | 12 | 12 | 11 | 10 | 6 | 8 | 5 | 6.5 | 60.6 | 32.0 | 32.0 | 32.0 | 6 | 13 | 67.0 | 75.0 | 6 | 13 | 37.0 | 39.0 | 5 | 6 | 5 | 6 | 57.3 | 128 | 140 | 152 | 7 | 7 | 59.0 | 65.0 | 5 | 12 | 5 | 10.5 | 12 |
| 8 FT | 12 | 13 | 11 | 10 | 6 | 8 | 5 | 6 | 56.3 | 32.0 | 32.0 | 32.0 | 6 | 12 | 62.0 | 67.0 | 6 | 12 | 36.0 | 37.0 | 5 | 6 | 6 | 7 | 57.4 | 129 | 141 | 153 | 7 | 6.5 | 57.0 | 65.0 | 5 | 12 | 5 | 10 | 0 |
| 10 FT | 13 | 14 | 11 | 10 | 6 | 7.5 | 6 | 8 | 56.3 | 33.0 | 33.0 | 37.0 | 6 | 12 | 59.0 | 65.0 | 6 | 12 | 35.0 | 37.0 | 6 | 7.5 | 6 | 7 | 55.0 | 130 | 142 | 154 | 7 | 6.5 | 57.0 | 65.0 | 5 | 12 | 5 | 9.5 | 0 |
| 12 FT | 14 | 16 | 12 | 10 | 6 | 7.5 | 6 | 8 | 54.9 | 34.0 | 34.0 | 34.0 | 7 | 15 | 61.0 | 67.0 | 7 | 15 | 38.0 | 39.0 | 6 | 7 | 5 | 6 | 50.9 | 132 | 144 | 156 | 7 | 7 | 56.0 | 66.0 | 5 | 12 | 5 | 9.5 | 0 |
| 14 FT | 16 | 17 | 12 | 10 | 6 | 7.5 | 6 | 8 | 59.3 | 36.0 | 36.0 | 36.0 | 6 | 12 | 62.0 | 70.0 | 6 | 12 | 41.0 | 43.0 | 6 | 7 | 5 | 6 | 49.9 | 133 | 145 | 157 | 7 | 7 | 56.0 | 66.0 | 5 | 12 | 5 | 9 | 0 |
| 16 FT | 17 | 18 | 12 | 10 | 6 | 7 | 6 | 7.5 | 58.1 | 37.0 | 37.0 | 41.0 | 7 | 16 | 66.0 | 74.0 | 7 | 16 | 45.0 | 48.0 | 6 | 6.5 | 6 | 8 | 52.0 | 134 | 146 | 158 | 7 | 7 | 56.0 | 66.0 | 5 | 12 | 5 | 8 | 0 |
| 18 FT | 18 | 20 | 12 | 10 | 6 | 7 | 6 | 7 | 57.5 | 38.0 | 38.0 | 42.0 | 7 | 15 | 65.0 | 74.0 | 7 | 15 | 45.0 | 48.0 | 6 | 6 | 6 | 8 | 51.3 | 136 | 148 | 160 | 7 | 7 | 55.0 | 66.0 | 5 | 12 | 5 | 7.5 | 0 |
| 20 FT | 19 | 21 | 12 | 10 | 6 | 6 | 6 | 6.5 | 56.6 | 39.0 | 39.0 | 43.0 | 7 | 14 | 64.0 | 74.0 | 7 | 14 | 45.0 | 48.0 | 7 | 8 | 6 | 7.5 | 50.6 | 137 | 149 | 161 | 7 | 7 | 55.0 | 66.0 | 5 | 12 | 5 | 7 | 0 |
| 22 FT | 21 | 22 | 12 | 10 | 6 | 6 | 6 | 6.5 | 55.9 | 41.0 | 41.0 | 45.0 | 7 | 15 | 64.0 | 74.0 | 7 | 15 | 45.0 | 48.0 | 7 | 7 | 6 | 6.5 | 50.3 | 138 | 150 | 162 | 7 | 7 | 55.0 | 66.0 | 5 | 12 | 5 | 7 | 0 |
| 24 FT | 22 | 24 | 13 | 10 | 6 | 6 | 6 | 6.5 | 56.4 | 42.0 | 42.0 | 46.0 | 7 | 14 | 63.0 | 73.0 | 7 | 14 | 44.0 | 48.0 | 7 | 7 | 6 | 7.5 | 50.4 | 140 | 152 | 164 | 7 | 7 | 55.0 | 67.0 | 5 | 12 | 5 | 6.5 | 0 |
| 26 FT | 23 | 25 | 14 | 10 | 7 | 7 | 6 | 6.5 | 56.6 | 43.0 | 43.0 | 47.0 | 7 | 14 | 63.0 | 73.0 | 7 | 14 | 44.0 | 48.0 | 7 | 6.5 | 6 | 8 | 50.4 | 141 | 153 | 165 | 7 | 6.5 | 55.0 | 67.0 | 5 | 12 | 5 | 6.5 | 0 |
| 28 FT | 25 | 27 | 14 | 10 | 7 | 7 | 6 | 6.5 | 56.4 | 45.0 | 45.0 | 49.0 | 7 | 14 | 62.0 | 73.0 | 7 | 14 | 43.0 | 47.0 | 7 | 6.5 | 6 | 8 | 50.3 | 143 | 155 | 167 | 7 | 6 | 55.0 | 67.0 | 5 | 12 | 5 | 6 | 0 |
| 30 FT | 26 | 28 | 14 | 10 | 7 | 7 | 6 | 6.5 | 56.0 | 46.0 | 46.0 | 50.0 | 7 | 13 | 62.0 | 73.0 | 7 | 13 | 43.0 | 47.0 | 7 | 6 | 6 | 7.5 | 50.0 | 144 | 156 | 168 | 7 | 6 | 55.0 | 67.0 | 5 | 12 | 5 | 6 | 0 |
| 32 FT | 27 | 29 | 14 | 10 | 7 | 6 | 6 | 6 | 55.6 | 51.0 | 51.0 | 51.0 | 7 | 12 | 62.0 | 72.0 | 7 | 12 | 43.0 | 46.0 | 7 | 6 | 6 | 7.5 | 49.8 | 145 | 157 | 169 | 8 | 7.5 | 61.0 | 73.0 | 5 | 12 | 5 | 6 | 0 |
| 34 FT | 29 | 31 | 15 | 10 | 7 | 6 | 6 | 6.5 | 56.3 | 53.0 | 53.0 | 53.0 | 7 | 12 | 61.0 | 72.0 | 7 | 12 | 41.0 | 44.0 | 7 | 6 | 6 | 7.5 | 50.3 | 147 | 159 | 171 | 8 | 7 | 61.0 | 73.0 | 5 | 12 | 6 | 8 | 0 |
| 36 FT | 30 | 32 | 15 | 10 | 7 | 6 | 6 | 6 | 56.1 | 54.0 | 54.0 | 54.0 | 7 | 12 | 61.0 | 71.0 | 7 | 12 | 41.0 | 43.0 | 8 | 7.5 | 6 | 7.5 | 50.3 | 148 | 160 | 172 | 8 | 7 | 61.0 | 73.0 | 5 | 12 | 6 | 8 | 0 |
| 38 FT | 31 | 33 | 16 | 10 | 8 | 7.5 | 6 | 6 | 56.9 | 55.0 | 55.0 | 55.0 | 8 | 15 | 69.0 | 79.0 | 8 | 15 | 49.0 | 51.0 | 8 | 7.5 | 6 | 7 | 50.6 | 149 | 161 | 173 | 8 | 6.5 | 61.0 | 73.0 | 5 | 12 | 6 | 8 | 0 |
| 40 FT | 32 | 34 | 16 | 10 | 8 | 7.5 | 6 | 6 | 56.9 | 56.0 | 56.0 | 56.0 | 8 | 14 | 69.0 | 78.0 | 8 | 14 | 48.0 | 50.0 | 8 | 7 | 6 | 7 | 50.6 | 150 | 162 | 174 | 8 | 6.5 | 61.0 | 73.0 | 5 | 12 | 6 | 8 | 0 |
| 42 FT | 33 | 35 | 16 | 10 | 8 | 7 | 6 | 6 | 56.9 | 57.0 | 57.0 | 57.0 | 8 | 14 | 69.0 | 78.0 | 8 | 14 | 48.0 | 49.0 | 8 | 7 | 6 | 6.5 | 50.8 | 151 | 163 | 175 | 8 | 6.5 | 61.0 | 73.0 | 5 | 12 | 6 | 8 | 0 |
| 44 FT | 34 | 36 | 17 | 10 | 8 | 7 | 6 | 6 | 57.6 | 58.0 | 58.0 | 58.0 | 8 | 14 | 68.0 | 77.0 | 8 | 14 | 47.0 | 49.0 | 8 | 7 | 6 | 6.5 | 51.3 | 152 | 164 | 176 | 8 | 6 | 61.0 | 73.0 | 5 | 12 | 6 | 7.5 | 0 |
| 46 FT | 35 | 37 | 17 | 10 | 8 | 6.5 | 6 | 6 | 56.5 | 59.0 | 59.0 | 59.0 | 8 | 13 | 68.0 | 77.0 | 8 | 13 | 47.0 | 48.0 | 8 | 7 | 6 | 6.5 | 50.1 | 153 | 165 | 177 | 8 | 6 | 61.0 | 73.0 | 5 | 12 | 6 | 7.5 | 0 |
| 48 FT | 35 | 38 | 17 | 10 | 8 | 6.5 | 6 | 6 | 56.5 | 59.0 | 59.0 | 59.0 | 8 | 13 | 68.0 | 77.0 | 8 | 13 | 47.0 | 49.0 | 8 | 7 | 6 | 6 | 50.1 | 154 | 166 | 178 | 8 | 6 | 61.0 | 73.0 | 5 | 12 | 6 | 7.5 | 0 |
| 50 FT | 36 | 39 | 17 | 10 | 8 | 6.5 | 7 | 7.5 | 61.6 | 60.0 | 60.0 | 60.0 | 8 | 13 | 68.0 | 76.0 | 8 | 13 | 47.0 | 48.0 | 8 | 6.5 | 6 | 6 | 50.3 | 155 | 167 | 179 | 8 | 6 | 61.0 | 73.0 | 5 | 12 | 6 | 7.5 | 0 |

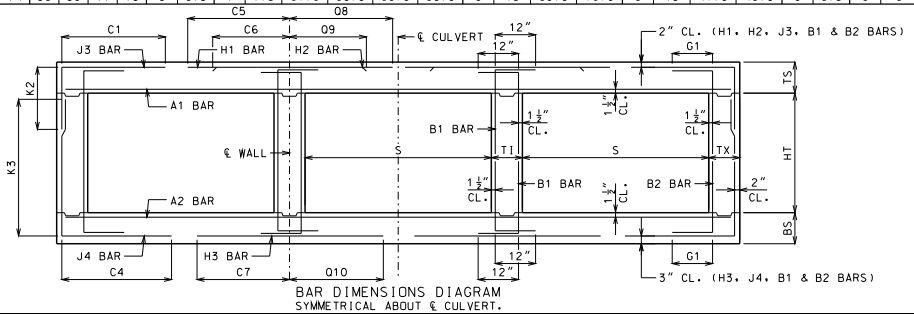


BAR DIMENSIONS DIAGRAM
SYMMETRICAL ABOUT ℄ CULVERT.

GENERAL NOTES:

IF DESIGN FILL IS BETWEEN TABULATED DESIGN FILLS, USE THE NEXT GREATER TABULATED DESIGN FILL, EXCEPT FOR DESIGN FILLS BETWEEN 2 FEET AND 4 FEET. FOR DESIGN FILLS BETWEEN 2 FEET AND 4 FEET USE THE GREATER MEMBER THICKNESS, AREA OF REINFORCEMENT AND BAR DIMENSIONS FROM THE 2 FEET AND 4 FEET TABULATED DESIGN FILLS. AREA OF REINFORCEMENT EQUALS BAR AREA PER FOOT SPACING.

SPECIAL DESIGNS ARE REQUIRED WHEN THE DESIGN FILL IS LESS THAN 1 FOOT OR GREATER THAN 50 FEET.

DIMENSIONS ARE IN INCHES UNLESS OTHERWISE SPECIFIED.

DESIGN FILLS ARE MEASURED FROM THE TOP OF TOP SLAB TO THE TOP OF EARTH FILL OR ROADWAY.

CULVERTS MEET STRENGTH AND SERVICEABILITY REQUIREMENTS FOR THE DESIGN VEHICULAR LIVE LOAD HL-93 MINUS THE LANE LOAD.


MISSOURI HIGHWAYS AND TRANSPORTATION COMMISSION
105 WEST CAPITOL
JEFFERSON CITY, MO 65102
1-888-ASK-MODOT (1-888-275-6636)


STATE OF MISSOURI
DENNIS W. HECKMAN
NUMBER PE-27141
PROFESSIONAL ENGINEER
THIS SHEET HAS BEEN SIGNED, SEALED AND DATED ELECTRONICALLY.

# CONCRETE TRIPLE BOX CULVERT

MEMBER THICKNESS
BAR SIZE, SPACING & DIMENSIONS

SPAN (S): 14 FEET
HEIGHT (HT): 7 THRU 12 FEET

DATE EFFECTIVE: 12/01/2011
DATE PREPARED: 9/29/2011

703.87

SHEET NO.
22 OF 27

IF A SEAL IS PRESENT ON THIS SHEET IT HAS BEEN ELECTRONICALLY SEALED AND DATED.

IF A SEAL IS PRESENT ON THIS SHEET IT HAS BEEN ELECTRONICALLY SEALED AND DATED.

SPAN (S) = 14 FT  HEIGHT (HT) = 13 FT OR 14 FT

| DESIGN FILL | MEMBER THICKNESS | | | | TOP SLAB BARS | | | | | | | | | | | | | | BOTTOM SLAB BARS | | | | | | | | | | WALL BARS | | | | |
|---|---|---|---|---|---|---|---|---|---|---|---|---|---|---|---|---|---|---|---|---|---|---|---|---|---|---|---|---|---|---|---|---|---|
| | | | | | A1 BARS | | J3 BARS | | | | | H1 BARS | | | | H2 BARS | | | | A2 BARS | | J4 BARS | | | | H3 BARS | | | | B1 BARS | | B2 BARS | |
| | TS | BS | TX | TI | SIZE | SPA. | SIZE | SPA. | C1 | K2 HT=13' | K2 HT=14' | SIZE | SPA. | C5 | Q8 | SIZE | SPA. | C6 | Q9 | SIZE | SPA. | SIZE | SPA. | C4 | K3 HT=13' | K3 HT=14' | SIZE | SPA. | C7 | Q10 | SIZE | SPA. | SIZE | SPA. | G1 |
| 1 FT | 14 | 10 | 11 | 11 | 5 | 6 | 5 | 6.5 | 71.8 | 34.0 | 34.0 | 5 | 12 | 135.5 | 100.5 | 5 | 12 | 39.0 | 42.0 | 5 | 7 | 6 | 6 | 87.3 | 162 | 174 | 6 | 6 | 60.0 | 62.0 | 5 | 12 | 5 | 7.5 | 12 |
| 2 FT | 15 | 11 | 11 | 11 | 6 | 8 | 5 | 6.5 | 71.8 | 35.0 | 35.0 | 6 | 16 | 139.5 | 107.5 | 6 | 16 | 45.0 | 48.0 | 5 | 6.5 | 6 | 6.5 | 83.4 | 163 | 175 | 6 | 6 | 59.0 | 62.0 | 5 | 12 | 5 | 7.5 | 12 |
| 4 FT | 11 | 11 | 11 | 11 | 6 | 6.5 | 6 | 7 | 88.0 | 31.0 | 35.0 | 6 | 13 | 86.0 | 92.0 | 6 | 13 | 40.0 | 40.0 | 5 | 6.5 | 6 | 6 | 76.4 | 163 | 175 | 7 | 6.5 | 62.0 | 66.0 | 5 | 10.5 | 5 | 7.5 | 12 |
| 6 FT | 12 | 12 | 11 | 11 | 6 | 8 | 6 | 7.5 | 74.5 | 32.0 | 36.0 | 6 | 13 | 68.0 | 75.0 | 6 | 13 | 38.0 | 39.0 | 5 | 6 | 6 | 6 | 71.3 | 164 | 176 | 7 | 6.5 | 60.0 | 65.0 | 5 | 12 | 5 | 7.5 | 12 |
| 8 FT | 12 | 13 | 11 | 11 | 6 | 8 | 6 | 7 | 68.5 | 36.0 | 36.0 | 6 | 12 | 63.0 | 67.0 | 6 | 12 | 36.0 | 37.0 | 6 | 8 | 6 | 6.5 | 68.8 | 165 | 177 | 7 | 6.5 | 58.0 | 65.0 | 5 | 12 | 5 | 7.5 | 0 |
| 10 FT | 13 | 15 | 11 | 11 | 6 | 7.5 | 6 | 6.5 | 66.0 | 37.0 | 37.0 | 6 | 12 | 60.0 | 65.0 | 6 | 12 | 36.0 | 37.0 | 6 | 7.5 | 6 | 6 | 67.4 | 167 | 179 | 6 | 6 | 55.0 | 63.0 | 5 | 12 | 5 | 7.5 | 0 |
| 12 FT | 14 | 16 | 12 | 11 | 6 | 7.5 | 6 | 6.5 | 64.0 | 38.0 | 38.0 | 7 | 16 | 61.0 | 67.0 | 7 | 16 | 38.0 | 40.0 | 6 | 7 | 6 | 7 | 65.3 | 168 | 180 | 7 | 7 | 57.0 | 66.0 | 5 | 12 | 5 | 7 | 0 |
| 14 FT | 16 | 17 | 13 | 11 | 6 | 7.5 | 6 | 7 | 69.1 | 40.0 | 40.0 | 6 | 12 | 63.0 | 69.0 | 6 | 12 | 41.0 | 43.0 | 6 | 7 | 6 | 6.5 | 63.6 | 169 | 181 | 7 | 7 | 57.0 | 65.0 | 5 | 12 | 5 | 6.5 | 0 |
| 16 FT | 17 | 18 | 13 | 11 | 6 | 7 | 6 | 6.5 | 67.8 | 41.0 | 41.0 | 6 | 12 | 62.0 | 69.0 | 6 | 12 | 41.0 | 43.0 | 6 | 6 | 6 | 6.5 | 62.4 | 170 | 182 | 7 | 6.5 | 56.0 | 66.0 | 5 | 12 | 5 | 6.5 | 0 |
| 18 FT | 18 | 20 | 13 | 11 | 6 | 7 | 6 | 6 | 66.6 | 42.0 | 42.0 | 7 | 15 | 66.0 | 74.0 | 7 | 15 | 46.0 | 48.0 | 6 | 6 | 6 | 6 | 61.9 | 172 | 184 | 7 | 7 | 56.0 | 66.0 | 5 | 12 | 5 | 6.5 | 0 |
| 20 FT | 19 | 21 | 14 | 11 | 6 | 6.5 | 6 | 6 | 66.3 | 43.0 | 43.0 | 7 | 15 | 65.0 | 73.0 | 7 | 15 | 45.0 | 48.0 | 7 | 8 | 6 | 6.5 | 61.0 | 173 | 185 | 7 | 7 | 56.0 | 66.0 | 5 | 12 | 5 | 6 | 0 |
| 22 FT | 21 | 23 | 14 | 11 | 6 | 6 | 7 | 8 | 70.6 | 45.0 | 45.0 | 7 | 15 | 64.0 | 73.0 | 7 | 15 | 45.0 | 48.0 | 7 | 7 | 6 | 6 | 60.8 | 175 | 187 | 7 | 7 | 56.0 | 66.0 | 5 | 12 | 5 | 6 | 0 |
| 24 FT | 22 | 24 | 15 | 11 | 6 | 6 | 7 | 8 | 70.5 | 46.0 | 46.0 | 7 | 15 | 64.0 | 73.0 | 7 | 15 | 45.0 | 48.0 | 7 | 7 | 6 | 6.5 | 60.3 | 176 | 188 | 7 | 7 | 56.0 | 66.0 | 5 | 12 | 6 | 8 | 0 |
| 26 FT | 23 | 25 | 15 | 11 | 7 | 7.5 | 7 | 7.5 | 69.9 | 47.0 | 47.0 | 7 | 14 | 64.0 | 73.0 | 7 | 14 | 45.0 | 48.0 | 7 | 6.5 | 6 | 6 | 59.6 | 177 | 189 | 7 | 6.5 | 56.0 | 67.0 | 5 | 12 | 6 | 8 | 0 |
| 28 FT | 25 | 27 | 16 | 11 | 7 | 7 | 7 | 7.5 | 70.3 | 49.0 | 49.0 | 7 | 14 | 63.0 | 72.0 | 7 | 14 | 44.0 | 47.0 | 7 | 6.5 | 6 | 6.5 | 59.9 | 179 | 191 | 7 | 6 | 56.0 | 67.0 | 5 | 12 | 6 | 8 | 0 |
| 30 FT | 26 | 28 | 16 | 11 | 7 | 7 | 7 | 7 | 69.8 | 50.0 | 50.0 | 7 | 13 | 62.0 | 72.0 | 7 | 13 | 43.0 | 46.0 | 7 | 6 | 6 | 6 | 59.4 | 180 | 192 | 7 | 6 | 56.0 | 67.0 | 5 | 12 | 6 | 8 | 0 |
| 32 FT | 27 | 30 | 17 | 11 | 7 | 6.5 | 7 | 7.5 | 70.1 | 51.0 | 51.0 | 7 | 13 | 62.0 | 72.0 | 7 | 13 | 43.0 | 46.0 | 7 | 6 | 6 | 6.5 | 59.5 | 182 | 194 | 8 | 7.5 | 62.0 | 73.0 | 5 | 12 | 6 | 7.5 | 0 |
| 34 FT | 28 | 31 | 17 | 11 | 7 | 6 | 7 | 6.5 | 69.8 | 52.0 | 52.0 | 7 | 12 | 62.0 | 71.0 | 7 | 12 | 43.0 | 45.0 | 7 | 6 | 6 | 6.5 | 59.1 | 183 | 195 | 8 | 7 | 62.0 | 73.0 | 5 | 12 | 6 | 7.5 | 0 |
| 36 FT | 29 | 32 | 18 | 11 | 7 | 6 | 7 | 7 | 70.3 | 53.0 | 53.0 | 7 | 12 | 62.0 | 71.0 | 7 | 12 | 42.0 | 45.0 | 8 | 7.5 | 6 | 6.5 | 59.3 | 184 | 196 | 8 | 7 | 62.0 | 73.0 | 5 | 12 | 6 | 7 | 0 |
| 38 FT | 31 | 33 | 19 | 11 | 8 | 7.5 | 7 | 7.5 | 71.0 | 55.0 | 55.0 | 8 | 15 | 70.0 | 78.0 | 8 | 15 | 48.0 | 50.0 | 8 | 7.5 | 6 | 6.5 | 59.6 | 185 | 197 | 8 | 6.5 | 62.0 | 73.0 | 5 | 12 | 6 | 6.5 | 0 |
| 40 FT | 31 | 34 | 19 | 11 | 8 | 7 | 7 | 6.5 | 70.9 | 55.0 | 55.0 | 8 | 14 | 70.0 | 78.0 | 8 | 14 | 49.0 | 51.0 | 8 | 7 | 6 | 6.5 | 59.5 | 186 | 198 | 8 | 6.5 | 62.0 | 73.0 | 5 | 12 | 6 | 6.5 | 0 |
| 42 FT | 32 | 35 | 20 | 11 | 8 | 7 | 7 | 7 | 71.5 | 56.0 | 56.0 | 8 | 14 | 69.0 | 77.0 | 8 | 14 | 49.0 | 51.0 | 8 | 7 | 6 | 6 | 59.8 | 187 | 199 | 8 | 6.5 | 62.0 | 74.0 | 5 | 12 | 6 | 6.5 | 0 |
| 44 FT | 33 | 36 | 20 | 11 | 8 | 7 | 7 | 6.5 | 71.5 | 57.0 | 57.0 | 8 | 14 | 69.0 | 77.0 | 8 | 14 | 48.0 | 50.0 | 8 | 7 | 6 | 6 | 59.9 | 188 | 200 | 8 | 6 | 62.0 | 74.0 | 5 | 12 | 6 | 6.5 | 0 |
| 46 FT | 34 | 37 | 20 | 11 | 8 | 7 | 7 | 7 | 70.1 | 58.0 | 58.0 | 8 | 14 | 69.0 | 76.0 | 8 | 14 | 47.0 | 49.0 | 8 | 7 | 6 | 6 | 58.5 | 189 | 201 | 8 | 6 | 62.0 | 74.0 | 5 | 12 | 6 | 6.5 | 0 |
| 48 FT | 35 | 38 | 21 | 11 | 8 | 6.5 | 7 | 7 | 70.9 | 59.0 | 59.0 | 8 | 13 | 68.0 | 75.0 | 8 | 13 | 47.0 | 48.0 | 8 | 7 | 6 | 6 | 59.0 | 190 | 202 | 8 | 6 | 62.0 | 74.0 | 5 | 12 | 6 | 6 | 0 |
| 50 FT | 36 | 39 | 21 | 11 | 8 | 6.5 | 7 | 6.5 | 70.9 | 60.0 | 60.0 | 8 | 13 | 68.0 | 75.0 | 8 | 13 | 47.0 | 48.0 | 8 | 6.5 | 6 | 6 | 59.1 | 191 | 203 | 8 | 6 | 62.0 | 74.0 | 5 | 12 | 6 | 6 | 0 |

SPAN (S) = 14 FT  HEIGHT (HT) = 15 FT OR 16 FT

| DESIGN FILL | MEMBER THICKNESS | | | | TOP SLAB BARS | | | | | | | | | | | | | | BOTTOM SLAB BARS | | | | | | | | | | WALL BARS | | | | |
|---|---|---|---|---|---|---|---|---|---|---|---|---|---|---|---|---|---|---|---|---|---|---|---|---|---|---|---|---|---|---|---|---|---|
| | | | | | A1 BARS | | J3 BARS | | | | | H1 BARS | | | | H2 BARS | | | | A2 BARS | | J4 BARS | | | | H3 BARS | | | | B1 BARS | | B2 BARS | |
| | TS | BS | TX | TI | SIZE | SPA. | SIZE | SPA. | C1 | K2 HT=15' | K2 HT=16' | SIZE | SPA. | C5 | Q8 | SIZE | SPA. | C6 | Q9 | SIZE | SPA. | SIZE | SPA. | C4 | K3 HT=15' | K3 HT=16' | SIZE | SPA. | C7 | Q10 | SIZE | SPA. | SIZE | SPA. | G1 |
| 1 FT | 14 | 11 | 12 | 13 | 5 | 6 | 5 | 6 | 72.6 | 34.0 | 34.0 | 5 | 12 | 136.5 | 101.5 | 5 | 12 | 38.0 | 41.0 | 5 | 6.5 | 6 | 6 | 103.4 | 187 | 199 | 6 | 6.5 | 62.0 | 63.0 | 5 | 11.5 | 5 | 7 | 12 |
| 2 FT | 15 | 12 | 12 | 13 | 6 | 8 | 6 | 8 | 75.6 | 35.0 | 39.0 | 6 | 16 | 143.5 | 108.5 | 6 | 16 | 45.0 | 48.0 | 5 | 6 | 6 | 6.5 | 99.0 | 188 | 200 | 6 | 6.5 | 61.0 | 63.0 | 5 | 12 | 5 | 7 | 12 |
| 4 FT | 12 | 12 | 12 | 13 | 6 | 8 | 6 | 7.5 | 75.6 | 36.0 | 36.0 | 6 | 15 | 138.5 | 89.0 | 6 | 15 | 40.0 | 41.0 | 5 | 6 | 6 | 6 | 90.1 | 188 | 200 | 6 | 6 | 60.0 | 63.0 | 5 | 12 | 5 | 7 | 12 |
| 6 FT | 12 | 13 | 12 | 13 | 6 | 8 | 6 | 7 | 89.3 | 36.0 | 36.0 | 6 | 14 | 69.0 | 71.0 | 6 | 14 | 38.0 | 39.0 | 5 | 6 | 6 | 6 | 86.4 | 189 | 201 | 6 | 6 | 58.0 | 63.0 | 5 | 12 | 5 | 6.5 | 12 |
| 8 FT | 12 | 14 | 13 | 13 | 6 | 8 | 6 | 6.5 | 78.1 | 36.0 | 36.0 | 6 | 12 | 64.0 | 66.0 | 6 | 12 | 37.0 | 37.0 | 6 | 8 | 6 | 6 | 81.9 | 190 | 202 | 6 | 6 | 57.0 | 62.0 | 5 | 12 | 5 | 6.5 | 0 |
| 10 FT | 13 | 15 | 13 | 13 | 6 | 8 | 6 | 6.5 | 75.1 | 37.0 | 37.0 | 6 | 12 | 61.0 | 64.0 | 6 | 12 | 37.0 | 37.0 | 6 | 7.5 | 6 | 6.5 | 79.1 | 191 | 203 | 7 | 7 | 59.0 | 65.0 | 5 | 12 | 5 | 6.5 | 0 |
| 12 FT | 14 | 16 | 14 | 13 | 6 | 7.5 | 6 | 6.5 | 72.9 | 38.0 | 38.0 | 6 | 12 | 59.0 | 63.0 | 6 | 12 | 36.0 | 37.0 | 6 | 7 | 6 | 6.5 | 75.6 | 192 | 204 | 7 | 7 | 58.0 | 65.0 | 5 | 12 | 5 | 6 | 0 |
| 14 FT | 15 | 17 | 15 | 13 | 6 | 7.5 | 6 | 6.5 | 77.6 | 39.0 | 39.0 | 7 | 16 | 69.0 | 73.0 | 7 | 16 | 47.0 | 48.0 | 6 | 7 | 6 | 6.5 | 73.6 | 193 | 205 | 7 | 7 | 58.0 | 65.0 | 5 | 12 | 6 | 8 | 0 |
| 16 FT | 17 | 19 | 15 | 13 | 6 | 7.5 | 6 | 6 | 77.6 | 41.0 | 41.0 | 6 | 12 | 63.0 | 68.0 | 6 | 12 | 42.0 | 44.0 | 6 | 6 | 6 | 6 | 73.5 | 195 | 207 | 6 | 6 | 55.0 | 63.0 | 5 | 12 | 6 | 8 | 0 |
| 18 FT | 18 | 20 | 15 | 13 | 6 | 7 | 7 | 7.5 | 81.8 | 42.0 | 48.0 | 7 | 16 | 67.0 | 73.0 | 7 | 16 | 46.0 | 49.0 | 6 | 6 | 7 | 7 | 75.6 | 196 | 208 | 7 | 7 | 57.0 | 66.0 | 5 | 12 | 6 | 8 | 0 |
| 20 FT | 19 | 21 | 16 | 13 | 6 | 6.5 | 7 | 7.5 | 81.1 | 43.0 | 49.0 | 7 | 15 | 66.0 | 73.0 | 7 | 15 | 46.0 | 49.0 | 7 | 7.5 | 7 | 7.5 | 74.8 | 197 | 209 | 7 | 7 | 57.0 | 66.0 | 5 | 12 | 6 | 8 | 0 |
| 22 FT | 20 | 23 | 17 | 13 | 6 | 6 | 7 | 7.5 | 80.8 | 44.0 | 50.0 | 7 | 15 | 65.0 | 73.0 | 7 | 15 | 46.0 | 49.0 | 7 | 7 | 7 | 7.5 | 74.6 | 199 | 211 | 7 | 7 | 57.0 | 66.0 | 5 | 12 | 6 | 7.5 | 0 |
| 24 FT | 22 | 24 | 17 | 13 | 6 | 6 | 7 | 7 | 80.8 | 46.0 | 52.0 | 7 | 15 | 65.0 | 73.0 | 7 | 15 | 46.0 | 49.0 | 7 | 7 | 7 | 7 | 74.1 | 200 | 212 | 7 | 7 | 57.0 | 66.0 | 5 | 12 | 6 | 7.5 | 0 |
| 26 FT | 23 | 25 | 18 | 13 | 7 | 7.5 | 7 | 7 | 80.5 | 47.0 | 53.0 | 7 | 15 | 65.0 | 72.0 | 7 | 15 | 46.0 | 49.0 | 7 | 6 | 7 | 7.5 | 73.6 | 201 | 213 | 7 | 6 | 57.0 | 67.0 | 5 | 12 | 6 | 7 | 0 |
| 28 FT | 24 | 27 | 19 | 13 | 7 | 7.5 | 7 | 7 | 80.5 | 48.0 | 54.0 | 7 | 14 | 64.0 | 72.0 | 7 | 14 | 45.0 | 48.0 | 7 | 6.5 | 7 | 8 | 73.8 | 203 | 215 | 7 | 6 | 57.0 | 67.0 | 5 | 12 | 6 | 6.5 | 0 |
| 30 FT | 25 | 28 | 20 | 13 | 7 | 6.5 | 7 | 7 | 80.6 | 49.0 | 55.0 | 7 | 13 | 64.0 | 72.0 | 7 | 13 | 45.0 | 48.0 | 7 | 6 | 7 | 8 | 73.5 | 204 | 216 | 7 | 6 | 57.0 | 67.0 | 5 | 12 | 6 | 6.5 | 0 |
| 32 FT | 27 | 30 | 21 | 13 | 7 | 6.5 | 7 | 7 | 81.1 | 51.0 | 51.0 | 7 | 13 | 63.0 | 71.0 | 7 | 13 | 43.0 | 46.0 | 7 | 6 | 6 | 6 | 70.8 | 206 | 218 | 8 | 7.5 | 63.0 | 73.0 | 5 | 12 | 6 | 6 | 0 |
| 34 FT | 28 | 31 | 21 | 13 | 7 | 6.5 | 7 | 7 | 80.9 | 52.0 | 52.0 | 7 | 12 | 63.0 | 71.0 | 7 | 12 | 43.0 | 46.0 | 7 | 6 | 6 | 6 | 70.4 | 207 | 219 | 8 | 7 | 63.0 | 73.0 | 5 | 12 | 6 | 6 | 0 |
| 36 FT | 29 | 32 | 22 | 13 | 7 | 6 | 7 | 7 | 81.1 | 59.0 | 59.0 | 7 | 12 | 63.0 | 71.0 | 7 | 12 | 43.0 | 45.0 | 8 | 7.5 | 7 | 7.5 | 73.3 | 208 | 220 | 8 | 7 | 63.0 | 73.0 | 5 | 12 | 6 | 6 | 0 |
| 38 FT | 30 | 33 | 22 | 13 | 7 | 6 | 7 | 6 | 81.1 | 60.0 | 60.0 | 7 | 12 | 63.0 | 71.0 | 7 | 12 | 42.0 | 45.0 | 8 | 7.5 | 7 | 7 | 73.4 | 209 | 221 | 8 | 6.5 | 63.0 | 74.0 | 5 | 12 | 6 | 6 | 0 |
| 40 FT | 31 | 34 | 23 | 13 | 8 | 7.5 | 7 | 6.5 | 81.8 | 61.0 | 61.0 | 8 | 15 | 70.0 | 78.0 | 8 | 15 | 50.0 | 52.0 | 8 | 7 | 7 | 7.5 | 73.5 | 210 | 222 | 8 | 6.5 | 63.0 | 74.0 | 5 | 12 | 7 | 7.5 | 0 |
| 42 FT | 32 | 35 | 24 | 13 | 8 | 7.5 | 7 | 6.5 | 82.3 | 62.0 | 62.0 | 8 | 14 | 70.0 | 78.0 | 8 | 14 | 49.0 | 51.0 | 8 | 6.5 | 7 | 7 | 73.8 | 211 | 223 | 8 | 6.5 | 63.0 | 74.0 | 5 | 12 | 7 | 7.5 | 0 |
| 44 FT | 33 | 36 | 24 | 13 | 8 | 7 | 7 | 6 | 82.4 | 63.0 | 63.0 | 8 | 14 | 70.0 | 77.0 | 8 | 14 | 49.0 | 50.0 | 8 | 6.5 | 7 | 7 | 73.9 | 212 | 224 | 8 | 6 | 63.0 | 74.0 | 5 | 12 | 7 | 7.5 | 0 |
| 46 FT | 34 | 38 | 26 | 13 | 8 | 7 | 7 | 6 | 83.8 | 64.0 | 64.0 | 8 | 14 | 70.0 | 76.0 | 8 | 14 | 48.0 | 49.0 | 8 | 7 | 7 | 7 | 74.6 | 214 | 226 | 8 | 6.5 | 63.0 | 74.0 | 5 | 12 | 7 | 7.5 | 0 |
| 48 FT | 35 | 38 | 26 | 13 | 8 | 6.5 | 7 | 6.5 | 82.1 | 65.0 | 65.0 | 8 | 13 | 69.0 | 76.0 | 8 | 13 | 48.0 | 49.0 | 8 | 6.5 | 7 | 7 | 72.6 | 214 | 226 | 8 | 6 | 63.0 | 74.0 | 5 | 12 | 7 | 8 | 0 |
| 50 FT | 35 | 39 | 26 | 13 | 8 | 6.5 | 7 | 6 | 82.1 | 65.0 | 65.0 | 8 | 13 | 69.0 | 76.0 | 8 | 13 | 48.0 | 50.0 | 8 | 6.5 | 7 | 6.5 | 72.8 | 215 | 227 | 8 | 6 | 63.0 | 74.0 | 5 | 12 | 7 | 7.5 | 0 |

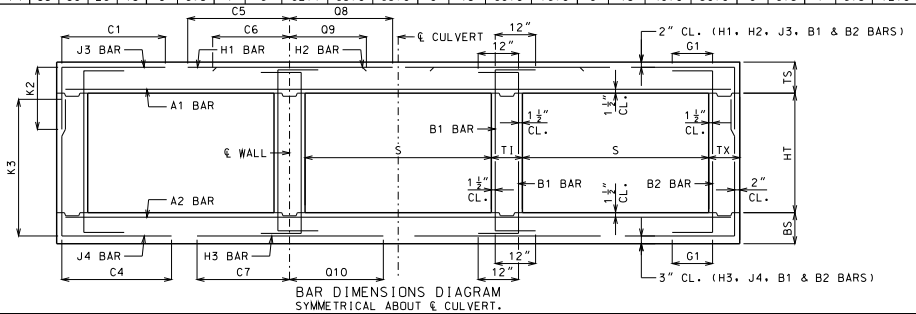


BAR DIMENSIONS DIAGRAM
SYMMETRICAL ABOUT ℄ CULVERT.

GENERAL NOTES:

IF DESIGN FILL IS BETWEEN TABULATED DESIGN FILLS, USE THE NEXT GREATER TABULATED DESIGN FILL, EXCEPT FOR DESIGN FILLS BETWEEN 2 FEET AND 4 FEET. FOR DESIGN FILLS BETWEEN 2 FEET AND 4 FEET USE THE GREATER MEMBER THICKNESS, AREA OF REINFORCEMENT AND BAR DIMENSIONS FROM THE 2 FEET AND 4 FEET TABULATED DESIGN FILLS. AREA OF REINFORCEMENT EQUALS BAR AREA PER FOOT SPACING.

SPECIAL DESIGNS ARE REQUIRED WHEN THE DESIGN FILL IS LESS THAN 1 FOOT OR GREATER THAN 50 FEET.

DIMENSIONS ARE IN INCHES UNLESS OTHERWISE SPECIFIED.

DESIGN FILLS ARE MEASURED FROM THE TOP OF TOP SLAB TO THE TOP OF EARTH FILL OR ROADWAY.

CULVERTS MEET STRENGTH AND SERVICEABILITY REQUIREMENTS FOR THE DESIGN VEHICULAR LIVE LOAD HL-93 MINUS THE LANE LOAD.


MISSOURI HIGHWAYS AND TRANSPORTATION COMMISSION
105 WEST CAPITOL
JEFFERSON CITY, MO 65102
1-888-ASK-MODOT (1-888-275-6636)


STATE OF MISSOURI
DENNIS W. HECKMAN
NUMBER PE-27141
PROFESSIONAL ENGINEER
THIS SHEET WAS SIGNED, SEALED AND DATED ELECTRONICALLY.

# CONCRETE TRIPLE BOX CULVERT

MEMBER THICKNESS
BAR SIZE, SPACING & DIMENSIONS

SPAN (S): 14 FEET
HEIGHT (HT): 13 THRU 16 FEET

DATE EFFECTIVE: 12/01/2011
DATE PREPARED: 9/29/2011

703.87

SHEET NO.
23 OF 27

## SPAN (S) = 15 FT  HEIGHT (HT) = 8 FT OR 9 FT OR 10 FT

| DESIGN FILL | MEMBER THICKNESS | | | | TOP SLAB BARS | | | | | | | | | | | | | | BOTTOM SLAB BARS | | | | | | | | | | | | WALL BARS | | | | |
|---|---|---|---|---|---|---|---|---|---|---|---|---|---|---|---|---|---|---|---|---|---|---|---|---|---|---|---|---|---|---|---|---|---|---|---|
| | | | | | A1 BARS | | J3 BARS | | | K2 | | | H1 BARS | | | | H2 BARS | | | | A2 BARS | | J4 BARS | | | K3 | | | H3 BARS | | | | B1 BARS | | B2 BARS | | |
| | TS | BS | TX | TI | SIZE | SPA. | SIZE | SPA. | C1 | HT=8′ | HT=9′ | HT=10′ | SIZE | SPA. | C5 | Q8 | SIZE | SPA. | C6 | Q9 | SIZE | SPA. | SIZE | SPA. | C4 | HT=8′ | HT=9′ | HT=10′ | SIZE | SPA. | C7 | Q10 | SIZE | SPA. | SIZE | SPA. | G1 |
| 1 FT | 15 | 10 | 8 | 8 | 6 | 8 | 5 | 8 | 72.9 | 35.0 | 35.0 | 35.0 | 6 | 16 | 146.5 | 111.5 | 6 | 16 | 48.0 | 53.0 | 5 | 7 | 7 | 6.5 | 69.0 | 102 | 114 | 126 | 6 | 6 | 61.0 | 65.0 | 5 | 12 | 5 | 12 | 12 |
| 2 FT | 15 | 11 | 9 | 8 | 6 | 7.5 | 5 | 8 | 73.5 | 35.0 | 35.0 | 35.0 | 6 | 16 | 146.5 | 111.5 | 6 | 16 | 49.0 | 53.0 | 5 | 6.5 | 6 | 7 | 60.4 | 103 | 115 | 127 | 6 | 6 | 59.0 | 65.0 | 5 | 12 | 5 | 12 | 12 |
| 4 FT | 12 | 11 | 9 | 8 | 6 | 6.5 | 6 | 7 | 60.8 | 32.0 | 36.0 | 36.0 | 6 | 12 | 84.0 | 109.0 | 6 | 12 | 40.0 | 43.0 | 5 | 6.5 | 6 | 6.5 | 53.9 | 103 | 115 | 127 | 7 | 6.5 | 61.0 | 68.0 | 5 | 11.5 | 5 | 12 | 12 |
| 6 FT | 12 | 12 | 9 | 8 | 6 | 7 | 6 | 6.5 | 53.5 | 32.0 | 32.0 | 36.0 | 7 | 16 | 72.0 | 86.0 | 7 | 16 | 41.0 | 43.0 | 6 | 8 | 6 | 7 | 49.9 | 104 | 116 | 128 | 7 | 6.5 | 60.0 | 68.0 | 5 | 12 | 5 | 12 | 12 |
| 8 FT | 13 | 14 | 9 | 8 | 6 | 7 | 6 | 7 | 49.5 | 33.0 | 33.0 | 33.0 | 7 | 15 | 67.0 | 77.0 | 7 | 15 | 39.0 | 42.0 | 6 | 8 | 5 | 6.5 | 43.4 | 106 | 118 | 130 | 7 | 7 | 58.0 | 69.0 | 5 | 12 | 5 | 12 | 0 |
| 10 FT | 14 | 15 | 9 | 8 | 6 | 7 | 6 | 7.5 | 46.6 | 34.0 | 34.0 | 34.0 | 7 | 15 | 64.0 | 73.0 | 7 | 15 | 39.0 | 41.0 | 6 | 7.5 | 5 | 6.5 | 41.5 | 107 | 119 | 131 | 7 | 6.5 | 58.0 | 69.0 | 5 | 12 | 5 | 12 | 0 |
| 12 FT | 15 | 16 | 9 | 8 | 6 | 6 | 6 | 7.5 | 50.4 | 35.0 | 35.0 | 35.0 | 7 | 14 | 70.0 | 80.0 | 7 | 14 | 46.0 | 49.0 | 6 | 6 | 5 | 6 | 40.0 | 108 | 120 | 132 | 7 | 6.5 | 57.0 | 69.0 | 5 | 12 | 5 | 11.5 | 0 |
| 14 FT | 17 | 18 | 9 | 8 | 6 | 6.5 | 6 | 7.5 | 48.4 | 37.0 | 37.0 | 37.0 | 7 | 15 | 68.0 | 79.0 | 7 | 15 | 46.0 | 49.0 | 6 | 6.5 | 5 | 6 | 38.9 | 110 | 122 | 134 | 7 | 6.5 | 57.0 | 69.0 | 5 | 12 | 5 | 9.5 | 0 |
| 16 FT | 18 | 19 | 9 | 8 | 6 | 6.5 | 6 | 7.5 | 47.1 | 38.0 | 38.0 | 42.0 | 7 | 14 | 67.0 | 79.0 | 7 | 14 | 45.0 | 49.0 | 6 | 6 | 6 | 8.5 | 41.0 | 111 | 123 | 135 | 7 | 6.5 | 57.0 | 69.0 | 5 | 12 | 5 | 8.5 | 0 |
| 18 FT | 19 | 21 | 10 | 8 | 6 | 6 | 6 | 7.5 | 47.8 | 39.0 | 39.0 | 39.0 | 7 | 14 | 66.0 | 78.0 | 7 | 14 | 45.0 | 49.0 | 7 | 8 | 5 | 6.5 | 37.9 | 113 | 125 | 137 | 7 | 6.5 | 57.0 | 70.0 | 5 | 12 | 5 | 9.5 | 0 |
| 20 FT | 21 | 22 | 10 | 8 | 6 | 6 | 6 | 7.5 | 46.6 | 41.0 | 41.0 | 41.0 | 7 | 14 | 66.0 | 78.0 | 7 | 14 | 45.0 | 49.0 | 7 | 7.5 | 5 | 6 | 37.5 | 114 | 126 | 138 | 7 | 6.5 | 56.0 | 70.0 | 5 | 12 | 5 | 8 | 0 |
| 22 FT | 23 | 24 | 10 | 8 | 7 | 7.5 | 6 | 7.5 | 46.0 | 43.0 | 43.0 | 43.0 | 7 | 14 | 65.0 | 77.0 | 7 | 14 | 45.0 | 49.0 | 7 | 7 | 5 | 6 | 37.3 | 116 | 128 | 140 | 7 | 6.5 | 56.0 | 70.0 | 5 | 12 | 5 | 8 | 0 |
| 24 FT | 24 | 25 | 11 | 8 | 7 | 7.5 | 6 | 8 | 46.5 | 44.0 | 44.0 | 44.0 | 7 | 13 | 64.0 | 77.0 | 7 | 13 | 45.0 | 49.0 | 7 | 6.5 | 5 | 6.5 | 37.5 | 117 | 129 | 141 | 7 | 6.5 | 56.0 | 70.0 | 5 | 12 | 5 | 7.5 | 0 |
| 26 FT | 25 | 27 | 11 | 8 | 7 | 7 | 6 | 7.5 | 46.4 | 45.0 | 45.0 | 45.0 | 7 | 13 | 64.0 | 77.0 | 7 | 13 | 44.0 | 48.0 | 7 | 6.5 | 5 | 6 | 37.1 | 119 | 131 | 143 | 7 | 6 | 56.0 | 70.0 | 5 | 12 | 5 | 7.5 | 0 |
| 28 FT | 27 | 28 | 11 | 8 | 7 | 6.5 | 6 | 7.5 | 45.8 | 47.0 | 47.0 | 47.0 | 7 | 13 | 64.0 | 76.0 | 7 | 13 | 44.0 | 48.0 | 7 | 6 | 5 | 6 | 37.1 | 120 | 132 | 144 | 7 | 6 | 56.0 | 70.0 | 5 | 12 | 5 | 7.5 | 0 |
| 30 FT | 28 | 30 | 12 | 8 | 7 | 6.5 | 6 | 7.5 | 46.8 | 52.0 | 52.0 | 52.0 | 7 | 12 | 63.0 | 76.0 | 7 | 12 | 43.0 | 47.0 | 8 | 7.5 | 6 | 8 | 40.4 | 122 | 134 | 146 | 8 | 7.5 | 62.0 | 76.0 | 5 | 12 | 5 | 7 | 0 |
| 32 FT | 30 | 31 | 12 | 8 | 7 | 6 | 6 | 7.5 | 46.3 | 54.0 | 54.0 | 54.0 | 7 | 12 | 63.0 | 75.0 | 7 | 12 | 42.0 | 45.0 | 8 | 7.5 | 6 | 7.5 | 40.5 | 123 | 135 | 147 | 8 | 7 | 62.0 | 76.0 | 5 | 12 | 5 | 7 | 0 |
| 34 FT | 31 | 32 | 12 | 8 | 8 | 7.5 | 6 | 7.5 | 46.1 | 55.0 | 55.0 | 55.0 | 8 | 15 | 71.0 | 83.0 | 8 | 15 | 50.0 | 53.0 | 8 | 6.5 | 6 | 7.5 | 40.3 | 124 | 136 | 148 | 8 | 6.5 | 62.0 | 76.0 | 5 | 12 | 5 | 7 | 0 |
| 36 FT | 32 | 34 | 12 | 8 | 8 | 7.5 | 6 | 7 | 46.1 | 56.0 | 56.0 | 56.0 | 8 | 14 | 71.0 | 82.0 | 8 | 14 | 49.0 | 52.0 | 8 | 7 | 6 | 7 | 40.3 | 126 | 138 | 150 | 8 | 6.5 | 62.0 | 76.0 | 5 | 12 | 5 | 7 | 0 |
| 38 FT | 33 | 35 | 13 | 8 | 8 | 7 | 6 | 7 | 47.0 | 57.0 | 57.0 | 57.0 | 8 | 14 | 71.0 | 82.0 | 8 | 14 | 49.0 | 51.0 | 8 | 7 | 6 | 6.5 | 40.8 | 127 | 139 | 151 | 8 | 6.5 | 62.0 | 76.0 | 5 | 12 | 5 | 6.5 | 0 |
| 40 FT | 34 | 36 | 13 | 8 | 8 | 7 | 6 | 6.5 | 46.9 | 58.0 | 58.0 | 58.0 | 8 | 14 | 70.0 | 81.0 | 8 | 14 | 49.0 | 51.0 | 8 | 6.5 | 6 | 6.5 | 40.8 | 128 | 140 | 152 | 8 | 6 | 62.0 | 76.0 | 5 | 12 | 5 | 6.5 | 0 |
| 42 FT | 35 | 37 | 13 | 8 | 8 | 6.5 | 6 | 6.5 | 46.9 | 59.0 | 59.0 | 59.0 | 8 | 13 | 70.0 | 81.0 | 8 | 13 | 48.0 | 50.0 | 8 | 6 | 6 | 6.5 | 40.9 | 129 | 141 | 153 | 8 | 6 | 62.0 | 76.0 | 5 | 12 | 5 | 6.5 | 0 |
| 44 FT | 36 | 38 | 13 | 8 | 8 | 6.5 | 6 | 6.5 | 46.9 | 60.0 | 60.0 | 60.0 | 8 | 13 | 70.0 | 80.0 | 8 | 13 | 48.0 | 49.0 | 8 | 6 | 6 | 6 | 41.0 | 130 | 142 | 154 | 8 | 6 | 62.0 | 76.0 | 5 | 12 | 5 | 6 | 0 |
| 46 FT | 37 | 39 | 13 | 8 | 8 | 6.5 | 6 | 6 | 46.9 | 61.0 | 61.0 | 61.0 | 8 | 12 | 70.0 | 79.0 | 8 | 12 | 47.0 | 49.0 | 8 | 6 | 6 | 6 | 41.1 | 131 | 143 | 155 | 8 | 6 | 62.0 | 76.0 | 5 | 12 | 6 | 8 | 0 |
| 48 FT | 38 | 41 | 13 | 8 | 8 | 6 | 6 | 6 | 46.1 | 62.0 | 62.0 | 62.0 | 8 | 12 | 69.0 | 78.0 | 8 | 12 | 46.0 | 48.0 | 8 | 6.5 | 7 | 7 | 43.3 | 133 | 145 | 157 | 9 | 7.5 | 68.0 | 82.0 | 5 | 12 | 6 | 8 | 0 |
| 50 FT | 39 | 42 | 14 | 8 | 8 | 6 | 6 | 6 | 47.1 | 63.0 | 63.0 | 63.0 | 8 | 12 | 69.0 | 77.0 | 8 | 12 | 46.0 | 47.0 | 8 | 6.5 | 7 | 7.5 | 43.9 | 134 | 146 | 158 | 9 | 7 | 68.0 | 82.0 | 5 | 12 | 5 | 6 | 0 |

## SPAN (S) = 15 FT  HEIGHT (HT) = 11 FT OR 12 FT OR 13 FT

| DESIGN FILL | MEMBER THICKNESS | | | | TOP SLAB BARS | | | | | | | | | | | | | | BOTTOM SLAB BARS | | | | | | | | | | | | WALL BARS | | | | |
|---|---|---|---|---|---|---|---|---|---|---|---|---|---|---|---|---|---|---|---|---|---|---|---|---|---|---|---|---|---|---|---|---|---|---|---|
| | | | | | A1 BARS | | J3 BARS | | | K2 | | | H1 BARS | | | | H2 BARS | | | | A2 BARS | | J4 BARS | | | K3 | | | H3 BARS | | | | B1 BARS | | B2 BARS | | |
| | TS | BS | TX | TI | SIZE | SPA. | SIZE | SPA. | C1 | HT=11′ | HT=12′ | HT=13′ | SIZE | SPA. | C5 | Q8 | SIZE | SPA. | C6 | Q9 | SIZE | SPA. | SIZE | SPA. | C4 | HT=11′ | HT=12′ | HT=13′ | SIZE | SPA. | C7 | Q10 | SIZE | SPA. | SIZE | SPA. | G1 |
| 1 FT | 15 | 11 | 9 | 10 | 6 | 8 | 5 | 6.5 | 73.9 | 35.0 | 35.0 | 35.0 | 6 | 16 | 147.5 | 112.5 | 6 | 16 | 48.0 | 52.0 | 5 | 6.5 | 6 | 6 | 89.3 | 139 | 151 | 163 | 6 | 6.5 | 63.0 | 67.0 | 5 | 12 | 5 | 8.5 | 12 |
| 2 FT | 15 | 11 | 10 | 10 | 6 | 7.5 | 5 | 6.5 | 74.5 | 35.0 | 35.0 | 35.0 | 6 | 16 | 147.5 | 112.5 | 6 | 16 | 49.0 | 53.0 | 5 | 6.5 | 6 | 6 | 77.1 | 139 | 151 | 163 | 6 | 6 | 61.0 | 65.0 | 5 | 12 | 5 | 8 | 12 |
| 4 FT | 12 | 12 | 10 | 10 | 6 | 7 | 6 | 7.5 | 77.5 | 32.0 | 36.0 | 36.0 | 6 | 13 | 89.0 | 107.0 | 6 | 13 | 41.0 | 43.0 | 5 | 6 | 6 | 6.5 | 71.3 | 140 | 152 | 164 | 6 | 6 | 60.0 | 67.0 | 5 | 10 | 5 | 8 | 12 |
| 6 FT | 12 | 12 | 10 | 10 | 6 | 7 | 6 | 7 | 67.9 | 32.0 | 36.0 | 36.0 | 7 | 16 | 74.0 | 83.0 | 7 | 16 | 41.0 | 43.0 | 6 | 8 | 6 | 6 | 65.1 | 140 | 152 | 164 | 7 | 6 | 61.0 | 68.0 | 5 | 12 | 5 | 8 | 12 |
| 8 FT | 13 | 14 | 10 | 10 | 6 | 7.5 | 6 | 6.5 | 63.0 | 33.0 | 37.0 | 37.0 | 7 | 16 | 69.0 | 75.0 | 7 | 16 | 40.0 | 42.0 | 6 | 7.5 | 6 | 6 | 62.3 | 142 | 154 | 166 | 7 | 6.5 | 60.0 | 69.0 | 5 | 12 | 5 | 8 | 0 |
| 10 FT | 14 | 15 | 10 | 10 | 6 | 7 | 6 | 6.5 | 59.4 | 34.0 | 38.0 | 38.0 | 7 | 15 | 66.0 | 73.0 | 7 | 15 | 40.0 | 42.0 | 6 | 7 | 7 | 6.5 | 62.4 | 143 | 155 | 167 | 7 | 6.5 | 59.0 | 69.0 | 5 | 12 | 5 | 8 | 0 |
| 12 FT | 15 | 17 | 11 | 10 | 6 | 7 | 6 | 6.5 | 63.5 | 35.0 | 35.0 | 39.0 | 7 | 14 | 71.0 | 79.0 | 7 | 14 | 47.0 | 49.0 | 6 | 7 | 6 | 7 | 57.5 | 145 | 157 | 169 | 7 | 7 | 59.0 | 69.0 | 5 | 12 | 5 | 7.5 | 0 |
| 14 FT | 17 | 18 | 12 | 10 | 6 | 7 | 6 | 6.5 | 62.4 | 37.0 | 41.0 | 41.0 | 7 | 15 | 70.0 | 78.0 | 7 | 15 | 47.0 | 49.0 | 6 | 6.5 | 6 | 7 | 56.4 | 146 | 158 | 170 | 7 | 6.5 | 58.0 | 69.0 | 5 | 12 | 5 | 7 | 0 |
| 16 FT | 18 | 19 | 12 | 10 | 6 | 6.5 | 6 | 6.5 | 61.1 | 38.0 | 42.0 | 42.0 | 7 | 14 | 68.0 | 78.0 | 7 | 14 | 46.0 | 49.0 | 6 | 6 | 6 | 7 | 55.4 | 147 | 159 | 171 | 7 | 6.5 | 58.0 | 69.0 | 5 | 12 | 5 | 7 | 0 |
| 18 FT | 19 | 21 | 12 | 10 | 6 | 6 | 6 | 6 | 60.4 | 39.0 | 43.0 | 43.0 | 7 | 14 | 68.0 | 77.0 | 7 | 14 | 46.0 | 49.0 | 7 | 8 | 6 | 6 | 54.6 | 149 | 161 | 173 | 7 | 6.5 | 58.0 | 70.0 | 5 | 12 | 5 | 7 | 0 |
| 20 FT | 21 | 22 | 13 | 10 | 6 | 6 | 6 | 6 | 60.3 | 41.0 | 45.0 | 45.0 | 7 | 14 | 67.0 | 77.0 | 7 | 14 | 46.0 | 49.0 | 7 | 7 | 6 | 6.5 | 54.5 | 150 | 162 | 174 | 7 | 6.5 | 58.0 | 70.0 | 5 | 12 | 5 | 6.5 | 0 |
| 22 FT | 22 | 24 | 13 | 10 | 6 | 6 | 6 | 6 | 59.6 | 42.0 | 46.0 | 46.0 | 7 | 14 | 66.0 | 77.0 | 7 | 14 | 46.0 | 49.0 | 7 | 7 | 6 | 6.5 | 54.0 | 152 | 164 | 176 | 7 | 6.5 | 58.0 | 70.0 | 5 | 12 | 5 | 6.5 | 0 |
| 24 FT | 24 | 25 | 14 | 10 | 7 | 7.5 | 6 | 6 | 59.8 | 44.0 | 48.0 | 48.0 | 7 | 14 | 66.0 | 77.0 | 7 | 14 | 45.0 | 49.0 | 7 | 6.5 | 6 | 7 | 54.1 | 153 | 165 | 177 | 7 | 6.5 | 58.0 | 70.0 | 5 | 12 | 5 | 6 | 0 |
| 26 FT | 25 | 27 | 14 | 10 | 7 | 7 | 6 | 6 | 59.5 | 45.0 | 49.0 | 49.0 | 7 | 13 | 65.0 | 76.0 | 7 | 13 | 45.0 | 49.0 | 7 | 6.5 | 6 | 7 | 53.8 | 155 | 167 | 179 | 7 | 6 | 58.0 | 70.0 | 5 | 12 | 5 | 6 | 0 |
| 28 FT | 26 | 28 | 15 | 10 | 7 | 6.5 | 6 | 6 | 59.9 | 50.0 | 50.0 | 50.0 | 7 | 13 | 65.0 | 76.0 | 7 | 13 | 45.0 | 49.0 | 7 | 6 | 6 | 7 | 53.9 | 156 | 168 | 180 | 7 | 6 | 58.0 | 70.0 | 5 | 12 | 6 | 8 | 0 |
| 30 FT | 28 | 30 | 15 | 10 | 7 | 6.5 | 7 | 8 | 64.5 | 52.0 | 52.0 | 52.0 | 7 | 12 | 64.0 | 76.0 | 7 | 12 | 44.0 | 47.0 | 8 | 7.5 | 6 | 7 | 53.8 | 158 | 170 | 182 | 8 | 7.5 | 64.0 | 76.0 | 5 | 12 | 6 | 8 | 0 |
| 32 FT | 29 | 31 | 15 | 10 | 7 | 6 | 7 | 7 | 64.3 | 53.0 | 53.0 | 53.0 | 7 | 12 | 64.0 | 75.0 | 7 | 12 | 44.0 | 47.0 | 8 | 7.5 | 6 | 6.5 | 53.5 | 159 | 171 | 183 | 8 | 7 | 64.0 | 76.0 | 5 | 12 | 6 | 8 | 0 |
| 34 FT | 31 | 32 | 16 | 10 | 8 | 7.5 | 6 | 6 | 59.6 | 55.0 | 55.0 | 55.0 | 8 | 15 | 72.0 | 83.0 | 8 | 15 | 50.0 | 53.0 | 8 | 6.5 | 6 | 7 | 53.8 | 160 | 172 | 184 | 8 | 6.5 | 64.0 | 76.0 | 5 | 12 | 6 | 8 | 0 |
| 36 FT | 32 | 34 | 16 | 10 | 8 | 7.5 | 7 | 7 | 64.5 | 56.0 | 56.0 | 56.0 | 8 | 14 | 72.0 | 82.0 | 8 | 14 | 50.0 | 52.0 | 8 | 7 | 6 | 7 | 53.8 | 162 | 174 | 186 | 8 | 6.5 | 63.0 | 77.0 | 5 | 12 | 6 | 8 | 0 |
| 38 FT | 33 | 35 | 17 | 10 | 8 | 7 | 7 | 7.5 | 65.1 | 57.0 | 57.0 | 57.0 | 8 | 14 | 71.0 | 82.0 | 8 | 14 | 49.0 | 52.0 | 8 | 7 | 6 | 6.5 | 54.0 | 163 | 175 | 187 | 8 | 6.5 | 63.0 | 77.0 | 5 | 12 | 6 | 7.5 | 0 |
| 40 FT | 34 | 36 | 17 | 10 | 8 | 7 | 7 | 7 | 65.1 | 58.0 | 58.0 | 58.0 | 8 | 14 | 71.0 | 81.0 | 8 | 14 | 49.0 | 51.0 | 8 | 6.5 | 6 | 6.5 | 54.0 | 164 | 176 | 188 | 8 | 6 | 63.0 | 77.0 | 5 | 12 | 6 | 7.5 | 0 |
| 42 FT | 35 | 37 | 18 | 10 | 8 | 6.5 | 7 | 7.5 | 65.9 | 59.0 | 59.0 | 59.0 | 8 | 13 | 71.0 | 80.0 | 8 | 13 | 49.0 | 50.0 | 8 | 6 | 6 | 6.5 | 54.4 | 165 | 177 | 189 | 8 | 6 | 64.0 | 77.0 | 5 | 12 | 6 | 7 | 0 |
| 44 FT | 36 | 39 | 18 | 10 | 8 | 6.5 | 7 | 7 | 66.0 | 60.0 | 60.0 | 60.0 | 8 | 13 | 71.0 | 80.0 | 8 | 13 | 48.0 | 50.0 | 8 | 6.5 | 6 | 6 | 54.6 | 167 | 179 | 191 | 8 | 6 | 63.0 | 77.0 | 5 | 12 | 6 | 7 | 0 |
| 46 FT | 37 | 40 | 19 | 10 | 8 | 6.5 | 7 | 7.5 | 66.8 | 61.0 | 61.0 | 61.0 | 8 | 12 | 70.0 | 79.0 | 8 | 12 | 48.0 | 49.0 | 8 | 6.5 | 6 | 6 | 55.0 | 168 | 180 | 192 | 9 | 7.5 | 70.0 | 83.0 | 5 | 12 | 6 | 6.5 | 0 |
| 48 FT | 38 | 41 | 19 | 10 | 8 | 6 | 7 | 6.5 | 66.8 | 62.0 | 62.0 | 68.0 | 8 | 12 | 70.0 | 78.0 | 8 | 12 | 47.0 | 48.0 | 8 | 6.5 | 7 | 8 | 58.1 | 169 | 181 | 193 | 9 | 7 | 70.0 | 83.0 | 5 | 12 | 6 | 6.5 | 0 |
| 50 FT | 39 | 42 | 19 | 10 | 8 | 6 | 7 | 7 | 65.6 | 63.0 | 63.0 | 69.0 | 8 | 12 | 70.0 | 77.0 | 8 | 12 | 47.0 | 48.0 | 8 | 6.5 | 7 | 7.5 | 57.0 | 170 | 182 | 194 | 9 | 7 | 69.0 | 83.0 | 5 | 12 | 6 | 6.5 | 0 |

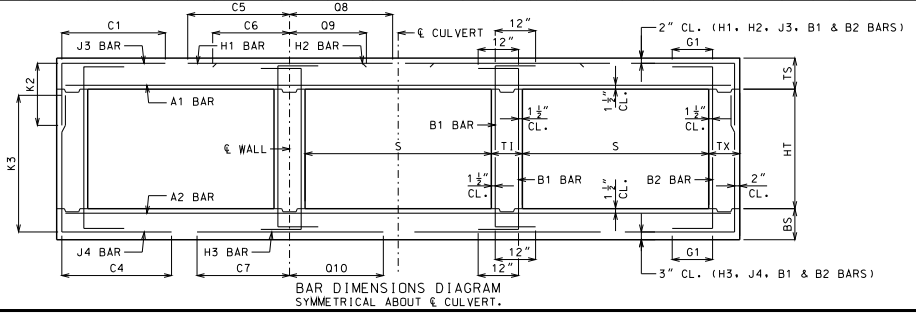


BAR DIMENSIONS DIAGRAM
SYMMETRICAL ABOUT ℄ CULVERT.

GENERAL NOTES:

IF DESIGN FILL IS BETWEEN TABULATED DESIGN FILLS, USE THE NEXT GREATER TABULATED DESIGN FILL, EXCEPT FOR DESIGN FILLS BETWEEN 2 FEET AND 4 FEET. FOR DESIGN FILLS BETWEEN 2 FEET AND 4 FEET USE THE GREATER MEMBER THICKNESS, AREA OF REINFORCEMENT AND BAR DIMENSIONS FROM THE 2 FEET AND 4 FEET TABULATED DESIGN FILLS. AREA OF REINFORCEMENT EQUALS BAR AREA PER FOOT SPACING.

SPECIAL DESIGNS ARE REQUIRED WHEN THE DESIGN FILL IS LESS THAN 1 FOOT OR GREATER THAN 50 FEET.

DIMENSIONS ARE IN INCHES UNLESS OTHERWISE SPECIFIED.

DESIGN FILLS ARE MEASURED FROM THE TOP OF TOP SLAB TO THE TOP OF EARTH FILL OR ROADWAY.

CULVERTS MEET STRENGTH AND SERVICEABILITY REQUIREMENTS FOR THE DESIGN VEHICULAR LIVE LOAD HL-93 MINUS THE LANE LOAD.


MISSOURI HIGHWAYS AND TRANSPORTATION COMMISSION
105 WEST CAPITOL
JEFFERSON CITY, MO 65102
1-888-ASK-MODOT (1-888-275-6636)


STATE OF MISSOURI — DENNIS W. HECKMAN — NUMBER PE-27141 — PROFESSIONAL ENGINEER
THIS SHEET HAS BEEN SIGNED, SEALED AND DATED ELECTRONICALLY.

# CONCRETE TRIPLE BOX CULVERT

MEMBER THICKNESS
BAR SIZE, SPACING & DIMENSIONS

SPAN (S): 15 FEET
HEIGHT (HT): 8 THRU 13 FEET

DATE EFFECTIVE: 12/01/2011
DATE PREPARED: 9/29/2011

703.87

SHEET NO. 24 OF 27

IF A SEAL IS PRESENT ON THIS SHEET IT HAS BEEN ELECTRONICALLY SEALED AND DATED.

SPAN (S) = 15 FT  HEIGHT (HT) = 14 FT OR 15 FT OR 16 FT

| DESIGN FILL | MEMBER THICKNESS | | | | TOP SLAB BARS | | | | | | | | | | | | | | BOTTOM SLAB BARS | | | | | | | | | | | | WALL BARS | | | | |
|---|---|---|---|---|---|---|---|---|---|---|---|---|---|---|---|---|---|---|---|---|---|---|---|---|---|---|---|---|---|---|---|---|---|---|
| | | | | | A1 BARS | | J3 BARS | | | | | | H1 BARS | | | | H2 BARS | | | | A2 BARS | | J4 BARS | | | | | | H3 BARS | | | | B1 BARS | | B2 BARS | |
| | TS | BS | TX | TI | SIZE | SPA. | SIZE | SPA. | C1 | K2 HT=14' | K2 HT=15' | K2 HT=16' | SIZE | SPA. | C5 | Q8 | SIZE | SPA. | C6 | Q9 | SIZE | SPA. | SIZE | SPA. | C4 | K3 HT=14' | K3 HT=15' | K3 HT=16' | SIZE | SPA. | C7 | Q10 | SIZE | SPA. | SIZE | SPA. | G1 |
| 1 FT | 15 | 11 | 12 | 13 | 6 | 8 | 6 | 8 | 79.3 | 35.0 | 35.0 | 39.0 | 6 | 16 | 152.5 | 114.5 | 6 | 16 | 48.0 | 51.0 | 5 | 6.5 | 6 | 6 | 99.0 | 175 | 187 | 199 | 6 | 6 | 64.0 | 65.0 | 5 | 11.5 | 5 | 7 | 12 |
| 2 FT | 15 | 12 | 12 | 13 | 6 | 8 | 6 | 8 | 79.3 | 35.0 | 35.0 | 39.0 | 6 | 16 | 152.5 | 114.5 | 6 | 16 | 49.0 | 52.0 | 5 | 6 | 6 | 6.5 | 95.5 | 176 | 188 | 200 | 6 | 6 | 63.0 | 66.0 | 5 | 11.5 | 5 | 7 | 12 |
| 4 FT | 12 | 12 | 12 | 13 | 6 | 7 | 6 | 7 | 111.5 | 36.0 | 36.0 | 36.0 | 6 | 13 | 99.0 | 91.0 | 6 | 13 | 41.0 | 42.0 | 5 | 6 | 6 | 6 | 88.6 | 176 | 188 | 200 | 7 | 6.5 | 65.0 | 69.0 | 5 | 9.5 | 5 | 7 | 12 |
| 6 FT | 12 | 13 | 12 | 13 | 6 | 7.5 | 6 | 6.5 | 85.6 | 36.0 | 36.0 | 36.0 | 6 | 12 | 71.0 | 73.0 | 6 | 12 | 40.0 | 40.0 | 6 | 8 | 6 | 6 | 84.0 | 177 | 189 | 201 | 7 | 6.5 | 64.0 | 69.0 | 5 | 12 | 5 | 6.5 | 12 |
| 8 FT | 13 | 14 | 13 | 13 | 6 | 7.5 | 6 | 7 | 77.4 | 37.0 | 37.0 | 37.0 | 6 | 12 | 67.0 | 70.0 | 6 | 12 | 38.0 | 39.0 | 6 | 7.5 | 6 | 6 | 78.1 | 178 | 190 | 202 | 7 | 6.5 | 62.0 | 68.0 | 5 | 12 | 5 | 6.5 | 0 |
| 10 FT | 14 | 16 | 13 | 13 | 6 | 7.5 | 6 | 6 | 75.0 | 38.0 | 38.0 | 38.0 | 7 | 15 | 67.0 | 71.0 | 7 | 15 | 41.0 | 42.0 | 6 | 7 | 6 | 6 | 77.0 | 180 | 192 | 204 | 7 | 7 | 61.0 | 69.0 | 5 | 12 | 5 | 6.5 | 0 |
| 12 FT | 15 | 17 | 14 | 13 | 6 | 7 | 6 | 6 | 78.9 | 39.0 | 39.0 | 39.0 | 7 | 15 | 73.0 | 78.0 | 7 | 15 | 48.0 | 50.0 | 6 | 7 | 6 | 6.5 | 74.8 | 181 | 193 | 205 | 7 | 6.5 | 60.0 | 69.0 | 5 | 12 | 5 | 6 | 0 |
| 14 FT | 16 | 18 | 15 | 13 | 6 | 7 | 6 | 6 | 77.5 | 40.0 | 40.0 | 40.0 | 7 | 14 | 71.0 | 77.0 | 7 | 14 | 48.0 | 49.0 | 6 | 6.5 | 6 | 6.5 | 73.0 | 182 | 194 | 206 | 7 | 6.5 | 60.0 | 69.0 | 5 | 12 | 6 | 8 | 0 |
| 16 FT | 18 | 20 | 15 | 13 | 6 | 7 | 7 | 8 | 81.9 | 42.0 | 42.0 | 42.0 | 7 | 15 | 70.0 | 77.0 | 7 | 15 | 48.0 | 50.0 | 6 | 6 | 6 | 6 | 72.4 | 184 | 196 | 208 | 7 | 7 | 60.0 | 69.0 | 5 | 12 | 6 | 8 | 0 |
| 18 FT | 19 | 21 | 15 | 13 | 6 | 6.5 | 7 | 7 | 80.8 | 43.0 | 43.0 | 49.0 | 7 | 14 | 69.0 | 77.0 | 7 | 14 | 48.0 | 50.0 | 7 | 8 | 7 | 7 | 74.4 | 185 | 197 | 209 | 7 | 6.5 | 60.0 | 69.0 | 5 | 12 | 6 | 8 | 0 |
| 20 FT | 20 | 23 | 16 | 13 | 6 | 6 | 7 | 7 | 80.3 | 44.0 | 44.0 | 50.0 | 7 | 14 | 69.0 | 76.0 | 7 | 14 | 47.0 | 50.0 | 7 | 7 | 7 | 7.5 | 74.0 | 187 | 199 | 211 | 7 | 7 | 59.0 | 70.0 | 5 | 12 | 6 | 8 | 0 |
| 22 FT | 22 | 24 | 17 | 13 | 6 | 6 | 7 | 7.5 | 80.1 | 46.0 | 46.0 | 52.0 | 7 | 14 | 68.0 | 76.0 | 7 | 14 | 47.0 | 50.0 | 7 | 7 | 7 | 7.5 | 73.3 | 188 | 200 | 212 | 7 | 6.5 | 59.0 | 70.0 | 5 | 12 | 6 | 7.5 | 0 |
| 24 FT | 23 | 25 | 17 | 13 | 7 | 7.5 | 7 | 7 | 79.4 | 47.0 | 47.0 | 53.0 | 7 | 14 | 67.0 | 76.0 | 7 | 14 | 47.0 | 50.0 | 7 | 6 | 7 | 7 | 72.5 | 189 | 201 | 213 | 7 | 6 | 59.0 | 70.0 | 5 | 12 | 6 | 7.5 | 0 |
| 26 FT | 25 | 27 | 18 | 13 | 7 | 7 | 7 | 7 | 79.6 | 49.0 | 49.0 | 55.0 | 7 | 14 | 67.0 | 76.0 | 7 | 14 | 47.0 | 50.0 | 7 | 6.5 | 7 | 7.5 | 72.5 | 191 | 203 | 215 | 7 | 6 | 59.0 | 70.0 | 5 | 12 | 6 | 7 | 0 |
| 28 FT | 26 | 29 | 19 | 13 | 7 | 7 | 7 | 7 | 79.6 | 50.0 | 50.0 | 50.0 | 7 | 13 | 66.0 | 76.0 | 7 | 13 | 46.0 | 50.0 | 7 | 6 | 6 | 6 | 69.5 | 193 | 205 | 217 | 8 | 7.5 | 65.0 | 76.0 | 5 | 12 | 6 | 6.5 | 0 |
| 30 FT | 27 | 30 | 19 | 13 | 7 | 6.5 | 7 | 6.5 | 79.3 | 51.0 | 51.0 | 57.0 | 7 | 13 | 66.0 | 76.0 | 7 | 13 | 46.0 | 49.0 | 8 | 7.5 | 7 | 7.5 | 72.1 | 194 | 206 | 218 | 8 | 7.5 | 65.0 | 77.0 | 5 | 12 | 6 | 6.5 | 0 |
| 32 FT | 29 | 31 | 20 | 13 | 7 | 6 | 7 | 7 | 79.5 | 53.0 | 53.0 | 59.0 | 7 | 12 | 65.0 | 75.0 | 7 | 12 | 44.0 | 47.0 | 8 | 7 | 7 | 8 | 71.9 | 195 | 207 | 219 | 8 | 7 | 65.0 | 77.0 | 5 | 12 | 6 | 6.5 | 0 |
| 34 FT | 30 | 33 | 21 | 13 | 7 | 6 | 7 | 7 | 79.9 | 54.0 | 54.0 | 54.0 | 7 | 12 | 65.0 | 75.0 | 7 | 12 | 44.0 | 47.0 | 8 | 7 | 6 | 6 | 69.0 | 197 | 209 | 221 | 8 | 6.5 | 65.0 | 77.0 | 5 | 12 | 6 | 6 | 0 |
| 36 FT | 31 | 34 | 22 | 13 | 8 | 7.5 | 7 | 6.5 | 80.1 | 55.0 | 61.0 | 61.0 | 8 | 15 | 73.0 | 82.0 | 8 | 15 | 52.0 | 55.0 | 8 | 7 | 7 | 7.5 | 71.9 | 198 | 210 | 222 | 8 | 6.5 | 65.0 | 77.0 | 5 | 12 | 6 | 6 | 0 |
| 38 FT | 32 | 35 | 22 | 13 | 8 | 7 | 7 | 6 | 79.8 | 56.0 | 62.0 | 62.0 | 8 | 14 | 73.0 | 82.0 | 8 | 14 | 52.0 | 54.0 | 8 | 6.5 | 7 | 7.5 | 71.6 | 199 | 211 | 223 | 8 | 6.5 | 65.0 | 77.0 | 5 | 12 | 6 | 6 | 0 |
| 40 FT | 33 | 36 | 23 | 13 | 8 | 6.5 | 7 | 6.5 | 80.4 | 57.0 | 63.0 | 63.0 | 8 | 13 | 73.0 | 82.0 | 8 | 13 | 51.0 | 54.0 | 8 | 6 | 7 | 7.5 | 71.8 | 200 | 212 | 224 | 8 | 6 | 65.0 | 77.0 | 5 | 12 | 7 | 7.5 | 0 |
| 42 FT | 34 | 38 | 24 | 13 | 8 | 6.5 | 7 | 6.5 | 81.1 | 58.0 | 64.0 | 64.0 | 8 | 13 | 72.0 | 81.0 | 8 | 13 | 51.0 | 53.0 | 8 | 6.5 | 7 | 7 | 72.4 | 202 | 214 | 226 | 8 | 6 | 65.0 | 78.0 | 5 | 12 | 7 | 7.5 | 0 |
| 44 FT | 35 | 39 | 25 | 13 | 8 | 6.5 | 7 | 6.5 | 81.9 | 59.0 | 65.0 | 65.0 | 8 | 13 | 72.0 | 81.0 | 8 | 13 | 50.0 | 52.0 | 8 | 6.5 | 7 | 7 | 72.5 | 203 | 215 | 227 | 8 | 6 | 65.0 | 78.0 | 5 | 12 | 7 | 7.5 | 0 |
| 46 FT | 36 | 40 | 26 | 13 | 8 | 6.5 | 7 | 6.5 | 82.5 | 60.0 | 66.0 | 66.0 | 8 | 13 | 72.0 | 80.0 | 8 | 13 | 50.0 | 52.0 | 8 | 6.5 | 7 | 7 | 72.9 | 204 | 216 | 228 | 9 | 7.5 | 71.0 | 84.0 | 5 | 12 | 7 | 8 | 0 |
| 48 FT | 37 | 41 | 27 | 13 | 8 | 6.5 | 7 | 6 | 83.3 | 67.0 | 67.0 | 67.0 | 8 | 12 | 72.0 | 79.0 | 8 | 12 | 49.0 | 51.0 | 8 | 6.5 | 7 | 7 | 73.1 | 205 | 217 | 229 | 9 | 7 | 71.0 | 84.0 | 5 | 12 | 7 | 8 | 0 |
| 50 FT | 38 | 42 | 27 | 13 | 8 | 6 | 7 | 6.5 | 81.8 | 68.0 | 68.0 | 68.0 | 8 | 12 | 71.0 | 79.0 | 8 | 12 | 49.0 | 50.0 | 8 | 6 | 7 | 7 | 71.4 | 206 | 218 | 230 | 9 | 7 | 71.0 | 84.0 | 5 | 12 | 6 | 6 | 0 |

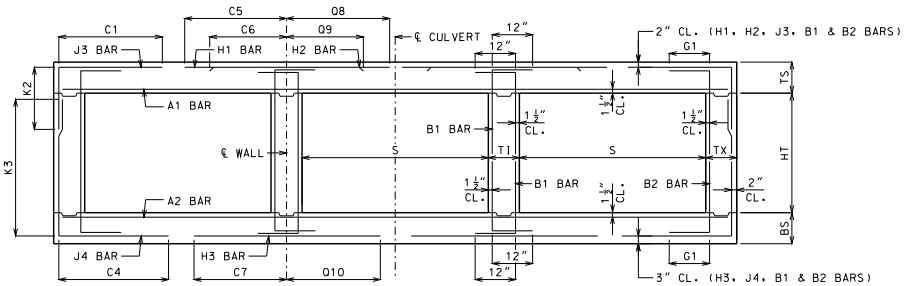


BAR DIMENSIONS DIAGRAM
SYMMETRICAL ABOUT ℄ CULVERT.

GENERAL NOTES:

IF DESIGN FILL IS BETWEEN TABULATED DESIGN FILLS, USE THE NEXT GREATER TABULATED DESIGN FILL, EXCEPT FOR DESIGN FILLS BETWEEN 2 FEET AND 4 FEET. FOR DESIGN FILLS BETWEEN 2 FEET AND 4 FEET USE THE GREATER MEMBER THICKNESS, AREA OF REINFORCEMENT AND BAR DIMENSIONS FROM THE 2 FEET AND 4 FEET TABULATED DESIGN FILLS. AREA OF REINFORCEMENT EQUALS BAR AREA PER FOOT SPACING.

SPECIAL DESIGNS ARE REQUIRED WHEN THE DESIGN FILL IS LESS THAN 1 FOOT OR GREATER THAN 50 FEET.

DIMENSIONS ARE IN INCHES UNLESS OTHERWISE SPECIFIED.

DESIGN FILLS ARE MEASURED FROM THE TOP OF TOP SLAB TO THE TOP OF EARTH FILL OR ROADWAY.

CULVERTS MEET STRENGTH AND SERVICEABILITY REQUIREMENTS FOR THE DESIGN VEHICULAR LIVE LOAD HL-93 MINUS THE LANE LOAD.


MISSOURI HIGHWAYS AND TRANSPORTATION COMMISSION
105 WEST CAPITOL
JEFFERSON CITY, MO 65102
1-888-ASK-MODOT (1-888-275-6636)


STATE OF MISSOURI
DENNIS W. HECKMAN
NUMBER PE-27141
PROFESSIONAL ENGINEER
THIS SHEET HAS BEEN SIGNED, SEALED AND DATED ELECTRONICALLY.

# CONCRETE TRIPLE BOX CULVERT

MEMBER THICKNESS
BAR SIZE, SPACING & DIMENSIONS

SPAN (S): 15 FEET
HEIGHT (HT): 14 THRU 16 FEET

DATE EFFECTIVE: 12/01/2011
DATE PREPARED: 9/29/2011

703.87

SHEET NO.
25 OF 27

IF A SEAL IS PRESENT ON THIS SHEET IT HAS BEEN ELECTRONICALLY SEALED AND DATED.

## SPAN (S) = 16 FT  HEIGHT (HT) = 8 FT OR 9 FT OR 10 FT

| DESIGN FILL | MEMBER THICKNESS | | | | TOP SLAB BARS | | | | | | | | | | | | | | BOTTOM SLAB BARS | | | | | | | | | | | | | | WALL BARS | | | | |
|---|---|---|---|---|---|---|---|---|---|---|---|---|---|---|---|---|---|---|---|---|---|---|---|---|---|---|---|---|---|---|---|---|---|---|---|---|---|
| | | | | | A1 BARS | | J3 BARS | | | | | H1 BARS | | | | H2 BARS | | | | A2 BARS | | J4 BARS | | | | | | H3 BARS | | | | B1 BARS | | B2 BARS | | |
| | TS | BS | TX | TI | SIZE | SPA. | SIZE | SPA. | C1 | K2 HT=8′ | K2 HT=9′ | K2 HT=10′ | SIZE | SPA. | C5 | Q8 | SIZE | SPA. | C6 | Q9 | SIZE | SPA. | SIZE | SPA. | C4 | K3 HT=8′ | K3 HT=9′ | K3 HT=10′ | SIZE | SPA. | C7 | Q10 | SIZE | SPA. | SIZE | SPA. | G1 |
| 1 FT | 15 | 10 | 9 | 8 | 6 | 7.5 | 5 | 8 | 77.1 | 35.0 | 35.0 | 35.0 | 6 | 16 | 154.5 | 117.5 | 6 | 16 | 52.0 | 57.0 | 5 | 7 | 6 | 6 | 64.6 | 102 | 114 | 126 | 7 | 6.5 | 66.0 | 71.0 | 5 | 12 | 5 | 12 | 12 |
| 2 FT | 16 | 11 | 9 | 8 | 6 | 7 | 5 | 8 | 77.1 | 36.0 | 36.0 | 36.0 | 6 | 14 | 154.5 | 117.5 | 6 | 14 | 48.0 | 53.0 | 5 | 6.5 | 6 | 6.5 | 59.3 | 103 | 115 | 127 | 7 | 7 | 65.0 | 71.0 | 5 | 12 | 5 | 12 | 12 |
| 4 FT | 13 | 11 | 9 | 8 | 6 | 6.5 | 5 | 6 | 55.9 | 33.0 | 33.0 | 33.0 | 6 | 12 | 87.0 | 115.0 | 6 | 12 | 42.0 | 45.0 | 6 | 8 | 6 | 6 | 54.0 | 103 | 115 | 127 | 7 | 6 | 64.0 | 71.0 | 5 | 12 | 5 | 12 | 12 |
| 6 FT | 13 | 12 | 10 | 8 | 6 | 7 | 5 | 6 | 51.4 | 33.0 | 33.0 | 33.0 | 7 | 15 | 75.0 | 91.0 | 7 | 15 | 42.0 | 45.0 | 6 | 7 | 6 | 6.5 | 51.4 | 104 | 116 | 128 | 7 | 6 | 62.0 | 70.0 | 5 | 12 | 5 | 12 | 12 |
| 8 FT | 14 | 14 | 10 | 8 | 6 | 7 | 5 | 6 | 47.3 | 34.0 | 34.0 | 34.0 | 7 | 15 | 70.0 | 81.0 | 7 | 15 | 41.0 | 43.0 | 6 | 7.5 | 5 | 6.5 | 44.5 | 106 | 118 | 130 | 7 | 6 | 61.0 | 71.0 | 5 | 12 | 5 | 12 | 0 |
| 10 FT | 15 | 16 | 10 | 8 | 6 | 6.5 | 6 | 8 | 53.6 | 35.0 | 35.0 | 35.0 | 7 | 14 | 75.0 | 85.0 | 7 | 14 | 48.0 | 51.0 | 6 | 7 | 5 | 7 | 41.6 | 108 | 120 | 132 | 7 | 6.5 | 60.0 | 72.0 | 5 | 12 | 5 | 12 | 0 |
| 12 FT | 16 | 17 | 10 | 8 | 6 | 6.5 | 6 | 8 | 51.3 | 36.0 | 36.0 | 36.0 | 7 | 13 | 73.0 | 83.0 | 7 | 13 | 47.0 | 50.0 | 6 | 6.5 | 5 | 6.5 | 40.1 | 109 | 121 | 133 | 7 | 6 | 60.0 | 72.0 | 5 | 12 | 5 | 12 | 0 |
| 14 FT | 18 | 19 | 10 | 8 | 6 | 6 | 6 | 8 | 49.0 | 38.0 | 38.0 | 38.0 | 7 | 14 | 71.0 | 83.0 | 7 | 14 | 47.0 | 50.0 | 6 | 6 | 5 | 6.5 | 38.8 | 111 | 123 | 135 | 7 | 6.5 | 59.0 | 73.0 | 5 | 12 | 5 | 12 | 0 |
| 16 FT | 19 | 20 | 10 | 8 | 6 | 6 | 6 | 7.5 | 47.6 | 39.0 | 39.0 | 39.0 | 7 | 13 | 69.0 | 82.0 | 7 | 13 | 46.0 | 50.0 | 6 | 6 | 5 | 6.5 | 37.8 | 112 | 124 | 136 | 7 | 6 | 59.0 | 73.0 | 5 | 12 | 5 | 11 | 0 |
| 18 FT | 20 | 22 | 10 | 8 | 7 | 7 | 6 | 7.5 | 46.9 | 40.0 | 40.0 | 40.0 | 7 | 13 | 69.0 | 81.0 | 7 | 13 | 46.0 | 50.0 | 7 | 7.5 | 5 | 6.5 | 36.8 | 114 | 126 | 138 | 7 | 6.5 | 59.0 | 73.0 | 5 | 12 | 5 | 9.5 | 0 |
| 20 FT | 22 | 23 | 10 | 8 | 7 | 7.5 | 6 | 7.5 | 45.6 | 42.0 | 42.0 | 42.0 | 7 | 13 | 68.0 | 81.0 | 7 | 13 | 46.0 | 50.0 | 7 | 6.5 | 5 | 6 | 36.5 | 115 | 127 | 139 | 7 | 6 | 59.0 | 73.0 | 5 | 12 | 5 | 8 | 0 |
| 22 FT | 24 | 25 | 10 | 8 | 7 | 7.5 | 6 | 7.5 | 45.0 | 44.0 | 44.0 | 44.0 | 7 | 13 | 67.0 | 81.0 | 7 | 13 | 46.0 | 50.0 | 7 | 6.5 | 5 | 6 | 36.3 | 117 | 129 | 141 | 7 | 6.5 | 59.0 | 73.0 | 5 | 12 | 5 | 8 | 0 |
| 24 FT | 25 | 27 | 11 | 8 | 7 | 7 | 6 | 7.5 | 45.9 | 45.0 | 45.0 | 45.0 | 7 | 12 | 67.0 | 80.0 | 7 | 12 | 46.0 | 50.0 | 7 | 6.5 | 5 | 6 | 36.4 | 119 | 131 | 143 | 7 | 6 | 59.0 | 73.0 | 5 | 12 | 5 | 7.5 | 0 |
| 26 FT | 27 | 28 | 11 | 8 | 7 | 6.5 | 6 | 7.5 | 45.1 | 47.0 | 47.0 | 47.0 | 7 | 12 | 66.0 | 80.0 | 7 | 12 | 45.0 | 50.0 | 7 | 6 | 5 | 6 | 36.4 | 120 | 132 | 144 | 7 | 6 | 59.0 | 73.0 | 5 | 12 | 5 | 7.5 | 0 |
| 28 FT | 28 | 30 | 11 | 8 | 7 | 6 | 6 | 7 | 45.0 | 52.0 | 52.0 | 52.0 | 7 | 12 | 66.0 | 80.0 | 7 | 12 | 45.0 | 50.0 | 8 | 7.5 | 6 | 7 | 39.0 | 122 | 134 | 146 | 8 | 7.5 | 65.0 | 79.0 | 5 | 12 | 5 | 7.5 | 0 |
| 30 FT | 30 | 31 | 11 | 8 | 7 | 6 | 6 | 6.5 | 44.6 | 54.0 | 54.0 | 54.0 | 7 | 12 | 66.0 | 79.0 | 7 | 12 | 44.0 | 48.0 | 8 | 7 | 6 | 7 | 39.0 | 123 | 135 | 147 | 8 | 7 | 65.0 | 79.0 | 5 | 12 | 5 | 7.5 | 0 |
| 32 FT | 31 | 33 | 12 | 8 | 8 | 7.5 | 6 | 7.5 | 45.5 | 55.0 | 55.0 | 55.0 | 8 | 15 | 74.0 | 87.0 | 8 | 15 | 52.0 | 56.0 | 8 | 7 | 6 | 7 | 39.4 | 125 | 137 | 149 | 8 | 6.5 | 65.0 | 80.0 | 5 | 12 | 5 | 7 | 0 |
| 34 FT | 33 | 34 | 12 | 8 | 8 | 7 | 6 | 7 | 45.3 | 57.0 | 57.0 | 57.0 | 8 | 14 | 73.0 | 86.0 | 8 | 14 | 51.0 | 54.0 | 8 | 6.5 | 6 | 7 | 39.5 | 126 | 138 | 150 | 8 | 6.5 | 65.0 | 80.0 | 5 | 12 | 5 | 7 | 0 |
| 36 FT | 34 | 36 | 12 | 8 | 8 | 7 | 6 | 6.5 | 45.3 | 58.0 | 58.0 | 58.0 | 8 | 14 | 73.0 | 85.0 | 8 | 14 | 50.0 | 53.0 | 8 | 6.5 | 6 | 6.5 | 39.4 | 128 | 140 | 152 | 8 | 6 | 65.0 | 80.0 | 5 | 12 | 5 | 6.5 | 0 |
| 38 FT | 35 | 37 | 12 | 8 | 8 | 6.5 | 6 | 6.5 | 45.3 | 59.0 | 59.0 | 59.0 | 8 | 13 | 73.0 | 85.0 | 8 | 13 | 50.0 | 53.0 | 8 | 6.5 | 6 | 6.5 | 39.4 | 129 | 141 | 153 | 8 | 6 | 65.0 | 80.0 | 5 | 12 | 5 | 6 | 0 |
| 40 FT | 36 | 39 | 13 | 8 | 8 | 6 | 6 | 6.5 | 46.1 | 60.0 | 60.0 | 60.0 | 8 | 12 | 73.0 | 84.0 | 8 | 12 | 50.0 | 52.0 | 8 | 6.5 | 6 | 6 | 39.9 | 131 | 143 | 155 | 8 | 6 | 65.0 | 80.0 | 5 | 12 | 5 | 6.5 | 0 |
| 42 FT | 38 | 40 | 13 | 8 | 8 | 6 | 6 | 6 | 46.0 | 62.0 | 62.0 | 62.0 | 8 | 12 | 72.0 | 83.0 | 8 | 12 | 48.0 | 50.0 | 8 | 6.5 | 6 | 6 | 40.1 | 132 | 144 | 156 | 9 | 7 | 71.0 | 86.0 | 5 | 12 | 5 | 6 | 0 |
| 44 FT | 39 | 41 | 13 | 8 | 8 | 6 | 6 | 6 | 46.0 | 63.0 | 63.0 | 63.0 | 8 | 12 | 72.0 | 82.0 | 8 | 12 | 48.0 | 49.0 | 8 | 6 | 7 | 7 | 43.3 | 133 | 145 | 157 | 9 | 7 | 71.0 | 86.0 | 5 | 12 | 6 | 8 | 0 |
| 46 FT | 40 | 42 | 13 | 8 | 8 | 6 | 7 | 7 | 51.1 | 70.0 | 70.0 | 70.0 | 8 | 12 | 72.0 | 82.0 | 8 | 12 | 47.0 | 48.0 | 8 | 6 | 7 | 7 | 43.4 | 134 | 146 | 158 | 9 | 7 | 71.0 | 86.0 | 5 | 12 | 6 | 7.5 | 0 |
| 48 FT | 41 | 43 | 13 | 8 | 9 | 7.5 | 7 | 7 | 51.1 | 71.0 | 71.0 | 71.0 | 9 | 15 | 79.0 | 89.0 | 9 | 15 | 55.0 | 56.0 | 8 | 6 | 7 | 6.5 | 43.5 | 135 | 147 | 159 | 9 | 7 | 70.0 | 86.0 | 5 | 12 | 6 | 7.5 | 0 |
| 50 FT | 42 | 45 | 13 | 8 | 9 | 7 | 7 | 6 | 51.4 | 72.0 | 72.0 | 72.0 | 9 | 15 | 79.0 | 88.0 | 9 | 15 | 55.0 | 56.0 | 8 | 6 | 7 | 6.5 | 43.8 | 137 | 149 | 161 | 9 | 7 | 70.0 | 86.0 | 5 | 10.5 | 6 | 7 | 0 |

## SPAN (S) = 16 FT  HEIGHT (HT) = 11 FT OR 12 FT OR 13 FT

| DESIGN FILL | MEMBER THICKNESS | | | | TOP SLAB BARS | | | | | | | | | | | | | | BOTTOM SLAB BARS | | | | | | | | | | | | | | WALL BARS | | | | |
|---|---|---|---|---|---|---|---|---|---|---|---|---|---|---|---|---|---|---|---|---|---|---|---|---|---|---|---|---|---|---|---|---|---|---|---|---|---|
| | | | | | A1 BARS | | J3 BARS | | | | | H1 BARS | | | | H2 BARS | | | | A2 BARS | | J4 BARS | | | | | | H3 BARS | | | | B1 BARS | | B2 BARS | | |
| | TS | BS | TX | TI | SIZE | SPA. | SIZE | SPA. | C1 | K2 HT=11′ | K2 HT=12′ | K2 HT=13′ | SIZE | SPA. | C5 | Q8 | SIZE | SPA. | C6 | Q9 | SIZE | SPA. | SIZE | SPA. | C4 | K3 HT=11′ | K3 HT=12′ | K3 HT=13′ | SIZE | SPA. | C7 | Q10 | SIZE | SPA. | SIZE | SPA. | G1 |
| 1 FT | 15 | 11 | 9 | 10 | 6 | 7.5 | 5 | 6 | 77.5 | 35.0 | 35.0 | 35.0 | 6 | 16 | 155.5 | 118.5 | 6 | 16 | 52.0 | 57.0 | 5 | 6.5 | 6 | 6 | 87.6 | 139 | 151 | 163 | 6 | 6 | 65.0 | 69.0 | 5 | 12 | 5 | 8.5 | 12 |
| 2 FT | 16 | 12 | 9 | 10 | 6 | 7 | 5 | 6 | 77.5 | 36.0 | 36.0 | 36.0 | 6 | 14 | 155.5 | 118.5 | 6 | 14 | 49.0 | 54.0 | 5 | 6 | 6 | 6 | 79.0 | 140 | 152 | 164 | 6 | 6 | 64.0 | 69.0 | 5 | 12 | 5 | 8.5 | 12 |
| 4 FT | 13 | 12 | 10 | 10 | 6 | 6.5 | 6 | 7 | 76.3 | 37.0 | 37.0 | 37.0 | 6 | 12 | 91.0 | 115.0 | 6 | 12 | 42.0 | 45.0 | 5 | 6 | 6 | 6 | 69.6 | 140 | 152 | 164 | 7 | 6.5 | 65.0 | 72.0 | 5 | 10.5 | 5 | 8 | 12 |
| 6 FT | 13 | 13 | 10 | 10 | 6 | 6.5 | 6 | 7 | 67.3 | 37.0 | 37.0 | 37.0 | 7 | 15 | 77.0 | 88.0 | 7 | 15 | 43.0 | 45.0 | 6 | 7.5 | 6 | 6.5 | 64.3 | 141 | 153 | 165 | 7 | 6 | 64.0 | 72.0 | 5 | 12 | 5 | 8 | 12 |
| 8 FT | 14 | 14 | 10 | 10 | 6 | 7 | 6 | 6.5 | 61.5 | 38.0 | 38.0 | 38.0 | 7 | 15 | 71.0 | 79.0 | 7 | 15 | 41.0 | 44.0 | 6 | 7 | 6 | 6 | 60.3 | 142 | 154 | 166 | 7 | 6 | 62.0 | 72.0 | 5 | 12 | 5 | 8 | 0 |
| 10 FT | 15 | 16 | 10 | 10 | 6 | 6.5 | 6 | 6 | 63.9 | 35.0 | 39.0 | 39.0 | 7 | 14 | 76.0 | 85.0 | 7 | 14 | 49.0 | 51.0 | 6 | 6.5 | 6 | 6 | 57.6 | 144 | 156 | 168 | 7 | 6.5 | 61.0 | 72.0 | 5 | 12 | 5 | 8 | 0 |
| 12 FT | 16 | 18 | 11 | 10 | 6 | 6.5 | 6 | 6 | 62.9 | 36.0 | 40.0 | 40.0 | 7 | 14 | 74.0 | 83.0 | 7 | 14 | 48.0 | 51.0 | 6 | 6.5 | 6 | 7 | 56.4 | 146 | 158 | 170 | 7 | 6.5 | 61.0 | 73.0 | 5 | 12 | 5 | 7.5 | 0 |
| 14 FT | 18 | 19 | 12 | 10 | 6 | 6.5 | 6 | 6.5 | 61.8 | 38.0 | 42.0 | 42.0 | 7 | 14 | 72.0 | 82.0 | 7 | 14 | 48.0 | 51.0 | 6 | 6 | 6 | 7 | 55.8 | 147 | 159 | 171 | 7 | 6.5 | 61.0 | 73.0 | 5 | 12 | 5 | 7 | 0 |
| 16 FT | 19 | 21 | 12 | 10 | 6 | 6 | 6 | 6 | 60.8 | 39.0 | 43.0 | 43.0 | 7 | 13 | 71.0 | 81.0 | 7 | 13 | 47.0 | 51.0 | 7 | 8 | 6 | 7 | 54.6 | 149 | 161 | 173 | 7 | 6.5 | 60.0 | 73.0 | 5 | 12 | 5 | 7 | 0 |
| 18 FT | 20 | 22 | 12 | 10 | 7 | 8 | 7 | 8 | 64.6 | 40.0 | 44.0 | 44.0 | 7 | 13 | 70.0 | 81.0 | 7 | 13 | 47.0 | 51.0 | 7 | 7.5 | 6 | 6 | 53.8 | 150 | 162 | 174 | 7 | 6.5 | 60.0 | 73.0 | 5 | 12 | 5 | 7 | 0 |
| 20 FT | 22 | 24 | 13 | 10 | 7 | 8 | 6 | 6 | 59.6 | 42.0 | 46.0 | 46.0 | 7 | 13 | 69.0 | 81.0 | 7 | 13 | 47.0 | 51.0 | 7 | 7 | 6 | 7 | 53.6 | 152 | 164 | 176 | 7 | 6.5 | 60.0 | 73.0 | 5 | 12 | 5 | 6.5 | 0 |
| 22 FT | 23 | 25 | 14 | 10 | 7 | 7 | 6 | 6 | 59.8 | 43.0 | 47.0 | 47.0 | 7 | 12 | 69.0 | 80.0 | 7 | 12 | 47.0 | 50.0 | 7 | 6.5 | 6 | 7 | 53.5 | 153 | 165 | 177 | 7 | 6.5 | 60.0 | 73.0 | 5 | 12 | 5 | 6.5 | 0 |
| 24 FT | 25 | 27 | 14 | 10 | 7 | 7 | 6 | 6 | 59.1 | 45.0 | 49.0 | 49.0 | 7 | 13 | 68.0 | 80.0 | 7 | 13 | 46.0 | 50.0 | 7 | 6.5 | 6 | 7 | 53.3 | 155 | 167 | 179 | 7 | 6 | 60.0 | 74.0 | 5 | 12 | 5 | 6 | 0 |
| 26 FT | 27 | 29 | 14 | 10 | 7 | 6.5 | 6 | 6 | 58.6 | 51.0 | 51.0 | 51.0 | 7 | 13 | 67.0 | 80.0 | 7 | 13 | 46.0 | 50.0 | 7 | 6 | 6 | 7 | 53.0 | 157 | 169 | 181 | 8 | 7.5 | 66.0 | 80.0 | 5 | 12 | 5 | 6 | 0 |
| 28 FT | 28 | 30 | 15 | 10 | 7 | 6.5 | 6 | 6 | 59.1 | 52.0 | 52.0 | 52.0 | 7 | 12 | 67.0 | 79.0 | 7 | 12 | 46.0 | 50.0 | 8 | 7.5 | 6 | 7 | 53.1 | 158 | 170 | 182 | 8 | 7.5 | 66.0 | 80.0 | 5 | 12 | 6 | 8 | 0 |
| 30 FT | 30 | 32 | 15 | 10 | 7 | 6 | 6 | 6 | 58.8 | 54.0 | 54.0 | 54.0 | 7 | 12 | 67.0 | 79.0 | 7 | 12 | 45.0 | 48.0 | 8 | 7 | 6 | 7 | 53.0 | 160 | 172 | 184 | 8 | 7 | 66.0 | 80.0 | 5 | 12 | 6 | 8 | 0 |
| 32 FT | 31 | 33 | 15 | 10 | 8 | 7.5 | 7 | 7 | 63.4 | 55.0 | 55.0 | 55.0 | 8 | 15 | 74.0 | 87.0 | 8 | 15 | 53.0 | 56.0 | 8 | 7 | 6 | 7 | 52.8 | 161 | 173 | 185 | 8 | 6.5 | 66.0 | 80.0 | 5 | 12 | 6 | 8 | 0 |
| 34 FT | 32 | 34 | 16 | 10 | 8 | 7 | 7 | 7.5 | 63.9 | 56.0 | 56.0 | 56.0 | 8 | 14 | 74.0 | 86.0 | 8 | 14 | 52.0 | 56.0 | 8 | 6 | 6 | 7 | 52.9 | 162 | 174 | 186 | 8 | 6 | 66.0 | 80.0 | 5 | 12 | 6 | 8 | 0 |
| 36 FT | 34 | 36 | 16 | 10 | 8 | 7 | 7 | 7.5 | 63.8 | 58.0 | 58.0 | 58.0 | 8 | 14 | 74.0 | 85.0 | 8 | 14 | 51.0 | 54.0 | 8 | 6.5 | 6 | 6.5 | 52.9 | 164 | 176 | 188 | 8 | 6 | 66.0 | 80.0 | 5 | 12 | 6 | 8 | 0 |
| 38 FT | 35 | 37 | 17 | 10 | 8 | 6.5 | 7 | 7.5 | 64.4 | 59.0 | 59.0 | 59.0 | 8 | 13 | 74.0 | 85.0 | 8 | 13 | 51.0 | 53.0 | 8 | 6 | 6 | 6.5 | 53.1 | 165 | 177 | 189 | 8 | 6 | 66.0 | 80.0 | 5 | 12 | 6 | 7.5 | 0 |
| 40 FT | 36 | 39 | 17 | 10 | 8 | 6.5 | 7 | 7 | 64.4 | 60.0 | 60.0 | 60.0 | 8 | 13 | 73.0 | 84.0 | 8 | 13 | 50.0 | 53.0 | 8 | 6.5 | 6 | 6 | 53.1 | 167 | 179 | 191 | 8 | 6 | 66.0 | 80.0 | 5 | 12 | 6 | 7.5 | 0 |
| 42 FT | 37 | 40 | 17 | 10 | 8 | 6 | 7 | 6.5 | 64.3 | 61.0 | 61.0 | 61.0 | 8 | 12 | 73.0 | 84.0 | 8 | 12 | 50.0 | 52.0 | 8 | 6 | 6 | 6 | 53.1 | 168 | 180 | 192 | 9 | 7 | 72.0 | 86.0 | 5 | 12 | 6 | 7.5 | 0 |
| 44 FT | 38 | 41 | 18 | 10 | 8 | 6 | 7 | 7 | 65.0 | 62.0 | 62.0 | 68.0 | 8 | 12 | 73.0 | 83.0 | 8 | 12 | 49.0 | 51.0 | 8 | 6 | 7 | 8 | 56.6 | 169 | 181 | 193 | 9 | 7 | 72.0 | 86.0 | 5 | 12 | 6 | 7 | 0 |
| 46 FT | 39 | 43 | 19 | 10 | 8 | 6 | 7 | 7.5 | 66.0 | 63.0 | 63.0 | 69.0 | 8 | 12 | 73.0 | 82.0 | 8 | 12 | 49.0 | 51.0 | 8 | 6 | 7 | 7.5 | 57.1 | 171 | 183 | 195 | 9 | 7 | 72.0 | 87.0 | 5 | 12 | 6 | 6.5 | 0 |
| 48 FT | 40 | 44 | 19 | 10 | 8 | 6 | 7 | 6.5 | 66.0 | 70.0 | 70.0 | 70.0 | 8 | 12 | 72.0 | 81.0 | 8 | 12 | 48.0 | 50.0 | 8 | 6 | 7 | 7 | 57.3 | 172 | 184 | 196 | 9 | 7 | 72.0 | 87.0 | 5 | 12 | 6 | 6.5 | 0 |
| 50 FT | 41 | 45 | 20 | 10 | 9 | 7.5 | 7 | 7 | 66.9 | 71.0 | 71.0 | 71.0 | 9 | 15 | 80.0 | 88.0 | 9 | 15 | 56.0 | 57.0 | 8 | 6 | 7 | 7 | 57.6 | 173 | 185 | 197 | 9 | 6.5 | 72.0 | 87.0 | 5 | 12 | 6 | 6.5 | 0 |

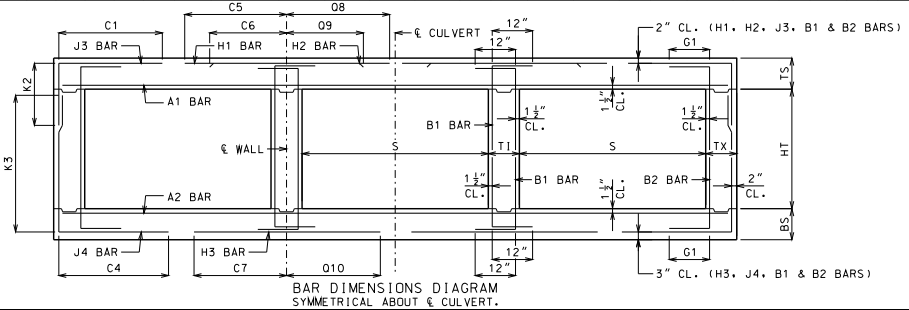


BAR DIMENSIONS DIAGRAM
SYMMETRICAL ABOUT ℄ CULVERT.

GENERAL NOTES:

IF DESIGN FILL IS BETWEEN TABULATED DESIGN FILLS, USE THE NEXT GREATER TABULATED DESIGN FILL, EXCEPT FOR DESIGN FILLS BETWEEN 2 FEET AND 4 FEET. FOR DESIGN FILLS BETWEEN 2 FEET AND 4 FEET USE THE GREATER MEMBER THICKNESS, AREA OF REINFORCEMENT AND BAR DIMENSIONS FROM THE 2 FEET AND 4 FEET TABULATED DESIGN FILLS. AREA OF REINFORCEMENT EQUALS BAR AREA PER FOOT SPACING.

SPECIAL DESIGNS ARE REQUIRED WHEN THE DESIGN FILL IS LESS THAN 1 FOOT OR GREATER THAN 50 FEET.

DIMENSIONS ARE IN INCHES UNLESS OTHERWISE SPECIFIED.

DESIGN FILLS ARE MEASURED FROM THE TOP OF TOP SLAB TO THE TOP OF EARTH FILL OR ROADWAY.

CULVERTS MEET STRENGTH AND SERVICEABILITY REQUIREMENTS FOR THE DESIGN VEHICULAR LIVE LOAD HL-93 MINUS THE LANE LOAD.


MISSOURI HIGHWAYS AND TRANSPORTATION COMMISSION
105 WEST CAPITOL
JEFFERSON CITY, MO 65102
1-888-ASK-MODOT (1-888-275-6636)


STATE OF MISSOURI — DENNIS W. HECKMAN — NUMBER PE-27141 — PROFESSIONAL ENGINEER
THIS SHEET HAS BEEN SIGNED, SEALED AND DATED ELECTRONICALLY.

# CONCRETE TRIPLE BOX CULVERT

MEMBER THICKNESS
BAR SIZE, SPACING & DIMENSIONS

SPAN (S): 16 FEET
HEIGHT (HT): 8 THRU 13 FEET

DATE EFFECTIVE: 12/01/2011
DATE PREPARED: 9/29/2011

703.87

SHEET NO.
26 OF 27

IF A SEAL IS PRESENT ON THIS SHEET IT HAS BEEN ELECTRONICALLY SEALED AND DATED.

SPAN (S) = 16 FT  HEIGHT (HT) = 14 FT OR 15 FT OR 16 FT

| DESIGN FILL | MEMBER THICKNESS | | | | TOP SLAB BARS | | | | | | | | | | | | | | BOTTOM SLAB BARS | | | | | | | | | | | | WALL BARS | | | | |
|---|---|---|---|---|---|---|---|---|---|---|---|---|---|---|---|---|---|---|---|---|---|---|---|---|---|---|---|---|---|---|---|---|---|---|
| | | | | | A1 BARS | | J3 BARS | | | | | | H1 BARS | | | | H2 BARS | | | | A2 BARS | | J4 BARS | | | | | | H3 BARS | | | | B1 BARS | | B2 BARS | |
| | TS | BS | TX | TI | SIZE | SPA. | SIZE | SPA. | C1 | K2 HT=14' | K2 HT=15' | K2 HT=16' | SIZE | SPA. | C5 | Q8 | SIZE | SPA. | C6 | Q9 | SIZE | SPA. | SIZE | SPA. | C4 | K3 HT=14' | K3 HT=15' | K3 HT=16' | SIZE | SPA. | C7 | Q10 | SIZE | SPA. | SIZE | SPA. | G1 |
| 1 FT | 15 | 11 | 12 | 13 | 6 | 7.5 | 6 | 8 | 82.9 | 35.0 | 35.0 | 39.0 | 6 | 16 | 160.5 | 120.5 | 6 | 16 | 51.0 | 55.0 | 5 | 6.5 | 6 | 6 | 97.5 | 175 | 187 | 199 | 7 | 7 | 70.0 | 71.0 | 5 | 10.5 | 5 | 7 | 12 |
| 2 FT | 16 | 12 | 12 | 13 | 6 | 7.5 | 6 | 8 | 82.9 | 36.0 | 36.0 | 40.0 | 6 | 15 | 160.5 | 120.5 | 6 | 15 | 49.0 | 52.0 | 5 | 6 | 6 | 6 | 93.3 | 176 | 188 | 200 | 7 | 7 | 69.0 | 71.0 | 5 | 12 | 5 | 7 | 12 |
| 4 FT | 12 | 13 | 13 | 13 | 6 | 6.5 | 6 | 6.5 | 94.8 | 36.0 | 36.0 | 36.0 | 7 | 16 | 92.0 | 94.0 | 7 | 16 | 46.0 | 46.0 | 5 | 6 | 6 | 6.5 | 87.8 | 177 | 189 | 201 | 7 | 7 | 68.0 | 73.0 | 5 | 8.5 | 5 | 6.5 | 12 |
| 6 FT | 13 | 13 | 13 | 13 | 6 | 7 | 6 | 7 | 82.5 | 37.0 | 37.0 | 37.0 | 7 | 16 | 77.0 | 81.0 | 7 | 16 | 44.0 | 45.0 | 6 | 7.5 | 6 | 6 | 79.3 | 177 | 189 | 201 | 7 | 6 | 66.0 | 71.0 | 5 | 12 | 5 | 6.5 | 12 |
| 8 FT | 14 | 15 | 13 | 13 | 6 | 7 | 6 | 6.5 | 77.9 | 38.0 | 38.0 | 38.0 | 7 | 15 | 73.0 | 77.0 | 7 | 15 | 43.0 | 44.0 | 6 | 7.5 | 6 | 6.5 | 77.8 | 179 | 191 | 203 | 7 | 6.5 | 64.0 | 72.0 | 5 | 12 | 5 | 6.5 | 0 |
| 10 FT | 15 | 16 | 13 | 13 | 6 | 7 | 6 | 6 | 80.9 | 39.0 | 39.0 | 39.0 | 7 | 15 | 78.0 | 83.0 | 7 | 15 | 50.0 | 51.0 | 6 | 6.5 | 6 | 6 | 75.3 | 180 | 192 | 204 | 7 | 6 | 63.0 | 72.0 | 5 | 12 | 5 | 6.5 | 0 |
| 12 FT | 16 | 18 | 14 | 13 | 6 | 6.5 | 6 | 6 | 78.5 | 40.0 | 40.0 | 40.0 | 7 | 14 | 76.0 | 82.0 | 7 | 14 | 49.0 | 51.0 | 6 | 6.5 | 6 | 6 | 73.8 | 182 | 194 | 206 | 7 | 6.5 | 63.0 | 72.0 | 5 | 12 | 5 | 6 | 0 |
| 14 FT | 17 | 19 | 14 | 13 | 6 | 6 | 7 | 7.5 | 81.6 | 41.0 | 41.0 | 47.0 | 7 | 13 | 74.0 | 81.0 | 7 | 13 | 49.0 | 51.0 | 6 | 6 | 7 | 7.5 | 75.0 | 183 | 195 | 207 | 7 | 6.5 | 62.0 | 72.0 | 5 | 12 | 5 | 6 | 0 |
| 16 FT | 19 | 21 | 15 | 13 | 6 | 6.5 | 7 | 7.5 | 80.9 | 43.0 | 43.0 | 49.0 | 7 | 14 | 73.0 | 81.0 | 7 | 14 | 49.0 | 51.0 | 7 | 8 | 7 | 7.5 | 74.0 | 185 | 197 | 209 | 7 | 6.5 | 62.0 | 73.0 | 5 | 12 | 6 | 8 | 0 |
| 18 FT | 20 | 22 | 16 | 13 | 6 | 6 | 7 | 7.5 | 80.0 | 44.0 | 44.0 | 50.0 | 7 | 13 | 72.0 | 80.0 | 7 | 13 | 49.0 | 51.0 | 7 | 7.5 | 7 | 7.5 | 72.9 | 186 | 198 | 210 | 7 | 6.5 | 62.0 | 73.0 | 5 | 12 | 6 | 8 | 0 |
| 20 FT | 22 | 24 | 16 | 13 | 6 | 6 | 7 | 7 | 79.1 | 46.0 | 46.0 | 52.0 | 7 | 13 | 71.0 | 80.0 | 7 | 13 | 48.0 | 51.0 | 7 | 7 | 7 | 7.5 | 72.3 | 188 | 200 | 212 | 7 | 6.5 | 62.0 | 73.0 | 5 | 12 | 6 | 8 | 0 |
| 22 FT | 23 | 25 | 17 | 13 | 7 | 7.5 | 7 | 7 | 78.8 | 47.0 | 47.0 | 53.0 | 7 | 13 | 70.0 | 80.0 | 7 | 13 | 48.0 | 51.0 | 7 | 6 | 7 | 8 | 71.5 | 189 | 201 | 213 | 7 | 6 | 62.0 | 73.0 | 5 | 12 | 6 | 7.5 | 0 |
| 24 FT | 25 | 27 | 17 | 13 | 7 | 7 | 7 | 7 | 78.1 | 49.0 | 49.0 | 55.0 | 7 | 13 | 70.0 | 80.0 | 7 | 13 | 48.0 | 51.0 | 7 | 6.5 | 7 | 7 | 71.3 | 191 | 203 | 215 | 7 | 6 | 61.0 | 73.0 | 5 | 12 | 6 | 7.5 | 0 |
| 26 FT | 26 | 29 | 18 | 13 | 7 | 7 | 7 | 7 | 78.1 | 50.0 | 50.0 | 56.0 | 7 | 12 | 69.0 | 79.0 | 7 | 12 | 48.0 | 51.0 | 7 | 6 | 7 | 8 | 71.0 | 193 | 205 | 217 | 8 | 7.5 | 67.0 | 80.0 | 5 | 12 | 6 | 7 | 0 |
| 28 FT | 28 | 30 | 19 | 13 | 7 | 6.5 | 7 | 7 | 78.3 | 52.0 | 52.0 | 52.0 | 7 | 12 | 68.0 | 79.0 | 7 | 12 | 47.0 | 51.0 | 8 | 7.5 | 6 | 6 | 67.8 | 194 | 206 | 218 | 8 | 7.5 | 67.0 | 80.0 | 5 | 12 | 6 | 6.5 | 0 |
| 30 FT | 29 | 32 | 19 | 13 | 7 | 6 | 7 | 6.5 | 77.9 | 53.0 | 53.0 | 59.0 | 7 | 12 | 68.0 | 79.0 | 7 | 12 | 47.0 | 51.0 | 8 | 7 | 7 | 7.5 | 70.5 | 196 | 208 | 220 | 8 | 7 | 67.0 | 80.0 | 5 | 12 | 6 | 6.5 | 0 |
| 32 FT | 31 | 33 | 20 | 13 | 8 | 7.5 | 7 | 6.5 | 78.1 | 55.0 | 55.0 | 61.0 | 8 | 15 | 76.0 | 87.0 | 8 | 15 | 53.0 | 57.0 | 8 | 7 | 7 | 8 | 70.4 | 197 | 209 | 221 | 8 | 6.5 | 67.0 | 80.0 | 5 | 12 | 6 | 6.5 | 0 |
| 34 FT | 32 | 34 | 20 | 13 | 8 | 7.5 | 7 | 6 | 77.6 | 56.0 | 56.0 | 62.0 | 8 | 14 | 75.0 | 86.0 | 8 | 14 | 53.0 | 56.0 | 8 | 6 | 7 | 7 | 70.0 | 198 | 210 | 222 | 8 | 6 | 67.0 | 80.0 | 5 | 12 | 6 | 6.5 | 0 |
| 36 FT | 33 | 36 | 22 | 13 | 8 | 7 | 7 | 6.5 | 78.8 | 57.0 | 63.0 | 63.0 | 8 | 14 | 75.0 | 86.0 | 8 | 14 | 53.0 | 56.0 | 8 | 6.5 | 7 | 7.5 | 70.3 | 200 | 212 | 224 | 8 | 6 | 67.0 | 81.0 | 5 | 12 | 6 | 6 | 0 |
| 38 FT | 34 | 37 | 23 | 13 | 8 | 6.5 | 7 | 6.5 | 79.1 | 58.0 | 64.0 | 64.0 | 8 | 13 | 75.0 | 85.0 | 8 | 13 | 53.0 | 56.0 | 8 | 6 | 7 | 7.5 | 70.3 | 201 | 213 | 225 | 8 | 6 | 67.0 | 81.0 | 5 | 12 | 6 | 6 | 0 |
| 40 FT | 36 | 39 | 23 | 13 | 8 | 6.5 | 7 | 6.5 | 79.0 | 60.0 | 66.0 | 66.0 | 8 | 13 | 75.0 | 85.0 | 8 | 13 | 51.0 | 54.0 | 8 | 6.5 | 7 | 7.5 | 70.3 | 203 | 215 | 227 | 8 | 6 | 67.0 | 81.0 | 5 | 12 | 7 | 7.5 | 0 |
| 42 FT | 37 | 40 | 23 | 13 | 8 | 6.5 | 7 | 6 | 78.9 | 61.0 | 67.0 | 67.0 | 8 | 12 | 74.0 | 84.0 | 8 | 12 | 51.0 | 53.0 | 8 | 6 | 7 | 7 | 70.3 | 204 | 216 | 228 | 9 | 7 | 73.0 | 87.0 | 5 | 12 | 7 | 7.5 | 0 |
| 44 FT | 38 | 42 | 24 | 13 | 8 | 6 | 7 | 6 | 79.8 | 68.0 | 68.0 | 68.0 | 8 | 12 | 74.0 | 83.0 | 8 | 12 | 50.0 | 52.0 | 8 | 6 | 7 | 7 | 70.8 | 206 | 218 | 230 | 9 | 7 | 73.0 | 87.0 | 5 | 12 | 7 | 7.5 | 0 |
| 46 FT | 39 | 43 | 26 | 13 | 8 | 6 | 7 | 6.5 | 81.4 | 69.0 | 69.0 | 69.0 | 8 | 12 | 74.0 | 83.0 | 8 | 12 | 50.0 | 52.0 | 8 | 6 | 7 | 7 | 71.3 | 207 | 219 | 231 | 9 | 7 | 73.0 | 87.0 | 5 | 12 | 7 | 7.5 | 0 |
| 48 FT | 40 | 44 | 27 | 13 | 8 | 6 | 7 | 6 | 82.1 | 70.0 | 70.0 | 70.0 | 8 | 12 | 74.0 | 82.0 | 8 | 12 | 49.0 | 51.0 | 8 | 6 | 7 | 7 | 71.6 | 208 | 220 | 232 | 9 | 7 | 73.0 | 88.0 | 5 | 12 | 7 | 8 | 0 |
| 50 FT | 41 | 45 | 28 | 13 | 9 | 7.5 | 7 | 6 | 83.0 | 71.0 | 71.0 | 71.0 | 9 | 15 | 82.0 | 89.0 | 9 | 15 | 57.0 | 58.0 | 8 | 6 | 7 | 7 | 72.0 | 209 | 221 | 233 | 9 | 6.5 | 73.0 | 88.0 | 5 | 12 | 7 | 8 | 0 |

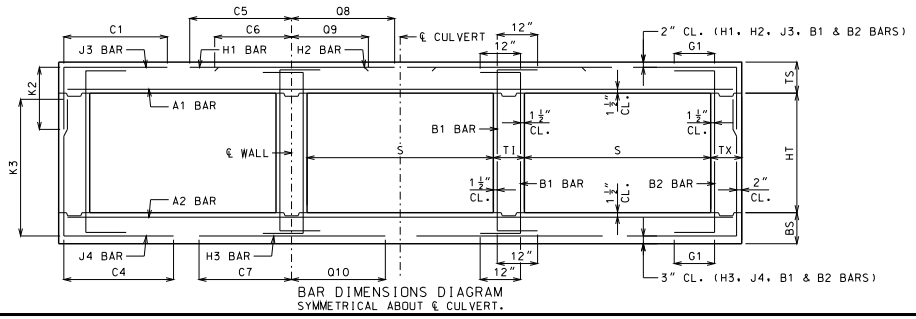


BAR DIMENSIONS DIAGRAM
SYMMETRICAL ABOUT ℄ CULVERT.

GENERAL NOTES:

IF DESIGN FILL IS BETWEEN TABULATED DESIGN FILLS, USE THE NEXT GREATER TABULATED DESIGN FILL, EXCEPT FOR DESIGN FILLS BETWEEN 2 FEET AND 4 FEET. FOR DESIGN FILLS BETWEEN 2 FEET AND 4 FEET USE THE GREATER MEMBER THICKNESS, AREA OF REINFORCEMENT AND BAR DIMENSIONS FROM THE 2 FEET AND 4 FEET TABULATED DESIGN FILLS. AREA OF REINFORCEMENT EQUALS BAR AREA PER FOOT SPACING.

SPECIAL DESIGNS ARE REQUIRED WHEN THE DESIGN FILL IS LESS THAN 1 FOOT OR GREATER THAN 50 FEET.

DIMENSIONS ARE IN INCHES UNLESS OTHERWISE SPECIFIED.

DESIGN FILLS ARE MEASURED FROM THE TOP OF TOP SLAB TO THE TOP OF EARTH FILL OR ROADWAY.

CULVERTS MEET STRENGTH AND SERVICEABILITY REQUIREMENTS FOR THE DESIGN VEHICULAR LIVE LOAD HL-93 MINUS THE LANE LOAD.


MISSOURI HIGHWAYS AND TRANSPORTATION COMMISSION
105 WEST CAPITOL
JEFFERSON CITY, MO 65102
1-888-ASK-MODOT (1-888-275-6636)


STATE OF MISSOURI
DENNIS W. HECKMANN
NUMBER PE-27141
PROFESSIONAL ENGINEER
THIS SHEET HAS BEEN SIGNED, SEALED AND DATED ELECTRONICALLY.

# CONCRETE TRIPLE BOX CULVERT

MEMBER THICKNESS
BAR SIZE, SPACING & DIMENSIONS

SPAN (S): 16 FEET
HEIGHT (HT): 14 THRU 16 FEET

DATE EFFECTIVE: 12/01/2011
DATE PREPARED: 9/29/2011

703.87

SHEET NO.
27 OF 27

IF A SEAL IS PRESENT ON THIS SHEET IT HAS BEEN ELECTRONICALLY SEALED AND DATED.

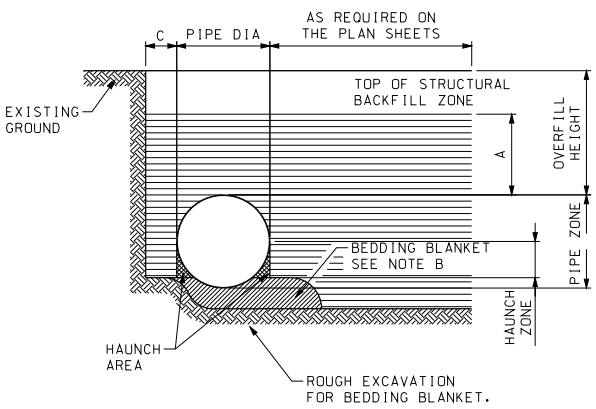


TYPICAL TRENCH DETAIL

## PIPE INSTALLATION AND BEDDING

NOTE:

A) MINIMUM STRUCTURAL BACKFILL OVER TOP OF PIPE SHALL BE ONE-EIGHTH DIAMETER OR SPAN OF PIPE OR ONE FOOT WHICHEVER IS GREATER.

B) BEDDING BLANKET OF LOOSE FILL SHALL BE ROUGHLY SHAPED TO FIT BOTTOM OF PIPE. MINIMUM THICKNESS BEFORE PLACING PIPE SHALL BE AS FOLLOWS:

| DEPTH OF CORRUGATION | MIN. BEDDING THICKNESS |
|---|---|
| $\frac{1}{2}$" | 1" |
| 1" | 2" |
| 2" | 3" |

C) TRENCH INSTALLATIONS - 2 FEET MINIMUM EACH SIDE OF CULVERT. THIS RECOMMENDED LIMIT SHOULD BE MODIFIED AS NECESSARY TO ACCOUNT FOR VARIABLES SUCH AS POOR IN-SITU SOILS. EMBANKMENT INSTALLATIONS - ONE DIAMETER OR SPAN EACH SIDE OF CULVERT.

| PIPE | |
|---|---|
| DIAMETER | SPACE S |
| UP TO 24" | 12" |
| 24" TO 72" | $\frac{1}{2}$ PIPE DIA |
| 72" AND OVER | 36" |

| PIPE-ARCHES | |
|---|---|
| SPAN | SPACE X |
| UP TO 36" | 12" |
| 36" TO 108" | 1/3 ARCH SPAN |
| 108" TO 189" | 36" |

## MULTIPLE STRUCTURE SPACING

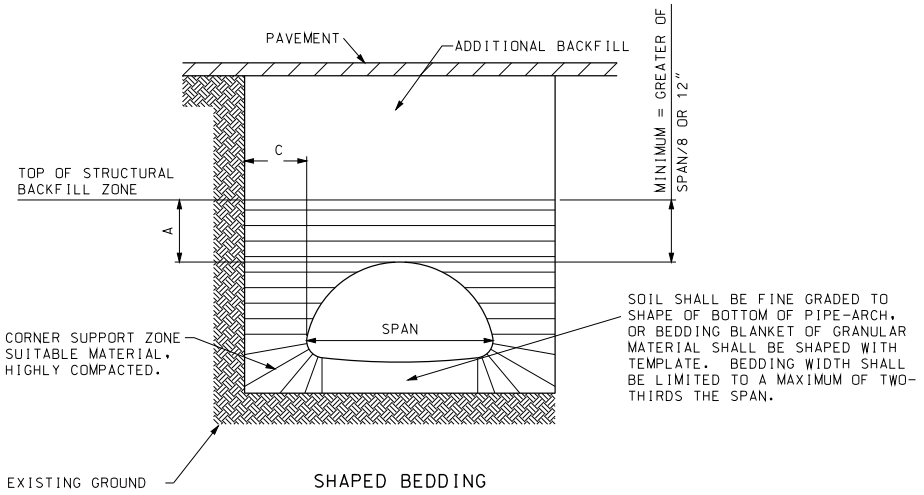


SHAPED BEDDING

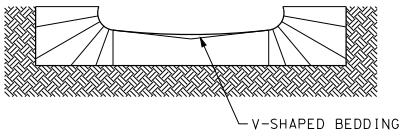


ALTERNATIVE-SHAPED BEDDING

PIPE-ARCH TRENCH DETAIL

## BEDDING AND CORNER ZONE TREATMENT FOR PIPE ARCH STRUCTURES

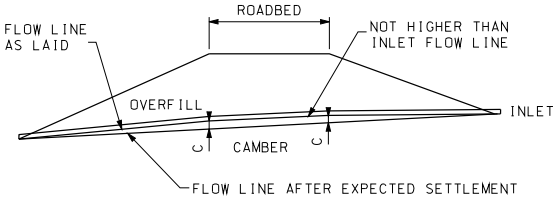


## TYPICAL CAMBERED FLOW LINE

NOTE:

ON YIELDING SOIL, PIPE CULVERTS SHALL BE PLACED ON A CAMBERED FLOW LINE. THE AMOUNT OF CAMBER WILL VARY WITH SOIL CONDITIONS AND WILL BE SPECIFIED ON THE DESIGN PLANS.

MISSOURI HIGHWAYS AND TRANSPORTATION COMMISSION
105 WEST CAPITOL
JEFFERSON CITY, MO 65102
1-888-ASK-MODOT (1-888-275-6636)

STATE OF MISSOURI
KATHRYN PHILLIPS HARVEY
NUMBER PE-23751
PROFESSIONAL ENGINEER
THIS SHEET HAS BEEN SIGNED, SEALED AND DATED ELECTRONICALLY.

# CORRUGATED METAL PIPE INSTALLATION METHODS

DATE EFFECTIVE: 04/01/2011
DATE PREPARED: 3/10/2011

725.00C

SHEET NO. 1 OF 5

IF A SEAL IS PRESENT ON THIS SHEET IT HAS BEEN ELECTRONICALLY SEALED AND DATED.

## CORRUGATED METALIC-COATED STEEL CIRCULAR PIPE LOCK SEAM

### MAXIMUM ALLOWABLE OVERFILL HEIGHTS (1)

| SPECIFIED DIAMETER OF PIPE | MINIMUM COVER | | SPECIFIED THICKNEWW OF COATED SHEET (IN.) | | | | | | | | | | | | | | | | | | | |
|---|---|---|---|---|---|---|---|---|---|---|---|---|---|---|---|---|---|---|---|---|---|---|
| | CORRUGATED | SPIRAL RIB | 0.064 | | | | 0.079 | | | | 0.109 | | | | 0.138 | | | | 0.168 | | | |
| | | | A | B | C | D | A | B | C | D | A | B | C | D | A | B | C | D | A | B | C | D |
| IN. | FT. | FT. | FT. | FT. | FT. | FT. | FT. | FT. | FT. | FT. | FT. | FT. | FT. | FT. | FT. | FT. | FT. | FT. | FT. | FT. | FT. | FT. |
| 12 | 1 | 1 | 219 | 251 | 224 | 144 | 273 | 314 | 280 | 201 | 382 | 440 | 392 | 334 | 492 | 566 | 504 | 484 | 602 | 693 | 617 | |
| 15 | 1 | 1 | 175 | 201 | 179 | 115 | 218 | 251 | 224 | 161 | 306 | 352 | 314 | 267 | 394 | 453 | 403 | 387 | 481 | 555 | 493 | |
| 18 | 1 | 1 | 146 | 167 | 149 | 96 | 182 | 209 | 187 | 134 | 255 | 293 | 261 | 223 | 328 | 378 | 336 | 323 | 401 | 462 | 411 | |
| 21 | 1 | 1 | 125 | 143 | 128 | 82 | 156 | 179 | 160 | 115 | 219 | 251 | 224 | 191 | 281 | 324 | 288 | 277 | 344 | 396 | 352 | |
| 24 | 1 | 1 | 109 | 126 | 112 | 72 | 137 | 157 | 140 | 100 | 191 | 220 | 196 | 167 | 246 | 283 | 252 | 242 | 301 | 347 | 308 | |
| 30 | 1 | 1 | 87 | 100 | 90 | 57 | 109 | 126 | 112 | 80 | 153 | 176 | 157 | 134 | 197 | 227 | 202 | 194 | 241 | 277 | 247 | |
| 36 | 1 | 1 | 73 | 84 | 75 | 48 | 91 | 105 | 93 | 67 | 127 | 147 | 131 | 111 | 164 | 189 | 168 | 161 | 201 | 231 | 206 | |
| 42 | 1 | 1 | 62 | 72 | 64 | 41 | 78 | 90 | 80 | 57 | 109 | 126 | 112 | 95 | 141 | 162 | 144 | 138 | 172 | 198 | 176 | |
| 48 | 1 | 1 | 55 | 63 | 56 | 36 | 68 | 78 | 70 | 50 | 96 | 110 | 98 | 83 | 123 | 142 | 126 | 121 | 150 | 173 | 154 | |
| 54 | 1 | 2 | | 56 | 50 | 32✳ | 61 | 70 | 62 | 45 | 85 | 98 | 87 | 74 | 109 | 126 | 112 | 108 | 134 | 154 | 137 | |
| 60 | 1 | 2 | | 50 | 45 | | | 63 | 56 | 40 | 76 | 88 | 78 | 67 | 98 | 113 | 101 | 97 | 120 | 139 | 123 | |
| 66 | 1 | 2 | | 46 | 41 | | | 57 | 51 | 37✳ | | 80 | 71 | 61 | 89 | 103 | 92 | 88 | 109 | 126 | 112 | |
| 72 | 1 | 2 | | 42 | 37 | | | 52 | 47 | | | 73 | 65 | 56 | 82 | 94 | 84 | 81 | 100 | 116 | 103 | |
| 78 | 1 | 2 | | 39 | 34 | | | 48 | 43 | | | 68 | 60 | 51 | | 87 | 78 | 75 | 89 | 107 | 95 | |
| 84 | 1 | 2 | | 36 | 32 | | | 45 | 40 | | | 63 | 56 | 48✳ | | 81 | 72 | 69 | 77 | 99 | 88 | |
| 90 | 1 | 2 | | 33 | 30 | | | 42 | 37 | | | 59 | 52 | | | 76 | 67 | 65 | | 92 | 82 | |
| 96 | 1 | 2 | | | | | | 39 | 35 | | | 55 | 49 | | | 71 | 63 | 60✳ | | 87 | 77 | |
| 102 | 2 | 3 | | | | | | 37 | 33 | | | 52 | 46 | | | 67 | 59 | 53✳ | | 82 | 73 | |
| 108 | 2 | 3 | | | | | | | | | | 49 | 44 | | | 63 | 56 | | | 77 | 69 | |
| 114 | 2 | 3 | | | | | | | | | | 46 | 41 | | | 60 | 53 | | | 73 | 65 | |
| 120 | 2 | 3 | | | | | | | | | | 44 | 39 | | | 57 | 50 | | | 69 | 62 | |
| 126 | 2 | 3 | | | | | | | | | | | | | | 54 | 48 | | | 66 | 59 | |

✳ FOR TRENCH INSTALLATION ONLY

## CORRUGATED METALIC-COATED STEEL CIRCULAR PIPE RIVETED SEAM

### MAXIMUM ALLOWABLE OVERFILL HEIGHTS (1)

| SPECIFIED DIAMETER OF PIPE | MINIMUM COVER | | SPECIFIED THICKNEWW OF COATED SHEET (IN.) | | | | | | | | | | | | | | | | | | | |
|---|---|---|---|---|---|---|---|---|---|---|---|---|---|---|---|---|---|---|---|---|---|---|
| | | | 0.064 | | | | 0.079 | | | | 0.109 | | | | 0.138 | | | | 0.168 | | | |
| | CORRUGATED | SPIRAL RIB | SINGLE RIVET | | DOUBLE RIVET | | SINGLE RIVET | | DOUBLE RIVET | | SINGLE RIVET | | DOUBLE RIVET | | SINGLE RIVET | | DOUBLE RIVET | | SINGLE RIVET | | DOUBLE RIVET | |
| | | | A | B | A | B | A | B | A | B | A | B | A | B | A | B | A | B | A | B | A | B |
| IN. | FT. | FT. | FT. | FT. | FT. | FT. | FT. | FT. | FT. | FT. | FT. | FT. | FT. | FT. | FT. | FT. | FT. | FT. | FT. | FT. | FT. | FT. |
| 12 | 1 | 1 | 143 | | 185 | 245 | 156 | | 255 | 305 | 200 | | 382 | 440 | 209 | | 419 | 544 | 219 | | 438 | 604 |
| 15 | 1 | 1 | 114 | | 148 | 196 | 124 | | 204 | 244 | 160 | | 306 | 352 | 168 | | 335 | 436 | 175 | | 351 | 483 |
| 18 | 1 | 1 | 95 | | 123 | 164 | 104 | | 170 | 203 | 133 | | 255 | 293 | 140 | | 279 | 363 | 146 | | 292 | 403 |
| 21 | 1 | 1 | 82 | | 105 | 140 | 89 | | 146 | 174 | 114 | | 219 | 251 | 120 | | 239 | 311 | 125 | | 251 | 345 |
| 24 | 1 | 1 | 71 | | 92 | 123 | 78 | | 127 | 153 | 100 | | 191 | 220 | 105 | | 209 | 272 | 109 | | 219 | 302 |
| 30 | 1 | 1 | 57 | | 74 | 98 | 62 | | 102 | 122 | 80 | | 153 | 176 | 84 | | 168 | 218 | 88 | | 175 | 242 |
| 36 | 1 | 1 | 48 | | 62 | 82 | 52 | | 85 | 102 | 67 | | 127 | 147 | 70 | | 140 | 181 | 73 | | 146 | 201 |
| 42 | 1 | 1 | 41 | | 53 | 70 | 44 | | 73 | 87 | 57 | | 109 | 126 | 60 | | 120 | 156 | 63 | | 125 | 173 |
| 48 | 1 | 1 | 36 | | 46 | 61 | 39 | | 64 | 76 | 50 | | 96 | 110 | 52 | | 105 | 136 | 55 | | 110 | 151 |
| 54 | 1 | 2 | | | | 55 | 35 | | 57 | 68 | 44 | | 85 | 98 | 47 | | 93 | 121 | 49 | | 97 | 134 |
| 60 | 1 | 2 | | | | 49 | | | | 61 | 40 | | 76 | 88 | 42 | | 84 | 109 | 44 | | 88 | 121 |
| 66 | 1 | 2 | | | | 45 | | | | 55 | | | | 80 | 38 | | 76 | 99 | 40 | | 80 | 110 |
| 72 | 1 | 2 | | | | 41 | | | | 51 | | | | 73 | 35 | | 70 | 91 | 36 | | 73 | 101 |
| 78 | 1 | 2 | | | | 38 | | | | 47 | | | | 68 | | | | 84 | 34 | | 67 | 93 |
| 84 | 1 | 2 | | | | 35 | | | | 44 | | | | 63 | | | | 78 | 31 | | 63 | 86 |
| 90 | 1 | 2 | | | | 33 | | | | 41 | | | | 59 | | | | 73 | | | | 81 |
| 96 | 1 | 2 | | | | | | | | 38 | | | | 55 | | | | 68 | | | | 76 |
| 102 | 2 | 3 | | | | | | | | 36 | | | | 52 | | | | 64 | | | | 71 |
| 108 | 2 | 3 | | | | | | | | | | | | 49 | | | | 60 | | | | 67 |
| 114 | 2 | 3 | | | | | | | | | | | | 46 | | | | 57 | | | | 64 |
| 120 | 2 | 3 | | | | | | | | | | | | 44 | | | | 54 | | | | 60 |
| 126 | 2 | 3 | | | | | | | | | | | | | | | | 52 | | | | 58 |

A = 2-2/3" X 1/2" CORRUGATIONS.
B = 3" X 1" CORRUGATIONS.
C = 5" X 1" CORRAGATIONS
D = 3/4" X 3/4" X 7-1/2" SPIRAL RIB

(1) MAXIMUM OVERFILL MEASURED FROM THE TOP OF PIPE TO SURFACE.

IF A SEAL IS PRESENT ON THIS SHEET IT HAS BEEN ELECTRONICALLY SEALED AND DATED.


MISSOURI HIGHWAYS AND TRANSPORTATION COMMISSION
105 WEST CAPITOL
JEFFERSON CITY, MO 65102
1-888-ASK-MODOT (1-888-275-6636)


STATE OF MISSOURI
KATHRYN PHILLIPS HARVEY
NUMBER PE-23751
PROFESSIONAL ENGINEER
THIS SHEET HAS BEEN SIGNED, SEALED AND DATED ELECTRONICALLY.

# CORRUGATED METAL PIPE INSTALLATION METHODS

DATE EFFECTIVE: 04/01/2011
DATE PREPARED: 3/9/2011

725.00C

## CORRUGATED H32 ALUMINUM CIRCULAR PIPE LOCK SEAM

MAXIMUM ALLOWABLE OVERFILL HEIGHTS (1)

| SPECIFIED DIAMETER OF PIPE | MINIMUM COVER | | SPECIFIED THICKNEWW OF COATED SHEET (IN.) | | | | | | | | | | | | | | | | | | | |
|---|---|---|---|---|---|---|---|---|---|---|---|---|---|---|---|---|---|---|---|---|---|---|
| | | | 0.06 | | | | 0.075 | | | | 0.105 | | | | 0.135 | | | | 0.164 | | | |
| | CORRUGATED | SPIRAL RIB | A | B | C | D | A | B | C | D | A | B | C | D | A | B | C | D | A | B | C | D |
| IN. | FT. | FT. | FT. | FT. | FT. | FT. | FT. | FT. | FT. | FT. | FT. | FT. | FT. | FT. | FT. | FT. | FT. | FT. | FT. | FT. | FT. | FT. |
| 12 | 1 | 1 | 132 | 152 | | 71 | 165 | 191 | | 97 | 232 | 267 | | 156 | 298 | 357 | | 221 | 364 | 420 | | |
| 15 | 1 | 1 | 106 | 122 | | 57 | 132 | 153 | | 78 | 185 | 213 | | 125 | 239 | 286 | | 176 | 291 | 336 | | |
| 18 | 1 | 1 | 88 | 101 | | 47 | 110 | 127 | | 65 | 155 | 178 | | 104 | 199 | 238 | | 147 | 243 | 280 | | |
| 21 | 1 | 1 | 76 | 87 | | 41 | 95 | 109 | | 56 | 132 | 152 | | 89 | 170 | 204 | | 126 | 208 | 240 | | |
| 24 | 1 | 1 | 66 | 76 | | 35 | 83 | 96 | | 49 | 116 | 133 | | 78 | 149 | 178 | | 110 | 182 | 210 | | |
| 30 | 1 | 2 | | 61 | | 28 | 66 | 76 | | 39 | 93 | 107 | | 62 | 119 | 143 | | 88 | 146 | 168 | | |
| 36 | 1 | 2 | | 51 | | 24✳ | 55 | 64 | | 32 | 77 | 89 | | 52 | 99 | 119 | | 74 | 121 | 140 | | |
| 42 | 1 | 2 | | 43 | | | | 55 | | 28✳ | 66 | 76 | | 45 | 85 | 102 | | 63 | 104 | 120 | | |
| 48 | 1 | 2 | | 38 | | | | 48 | | | 58 | 67 | | 39 | 75 | 89 | | 55 | 91 | 105 | | |
| 54 | 1 | 2 | | 34 | | | | 42 | | | 51 | 59 | | 35 | 66 | 79 | | 49 | 81 | 93 | | |
| 60 | 1 | 2 | | 30 | | | | 38 | | | | 53 | | 31✳ | 55 | 71 | | 44 | 68 | 84 | | |
| 66 | 1 | 2 | | 28 | | | | 35 | | | | 48 | | | | 65 | | 40 | 56 | 76 | | |
| 72 | 1 | 3 | | 25 | | | | 32 | | | | 44 | | | | 59 | | 37✳ | 46 | 70 | | |
| 78 | 1 | 3 | | | | | | 29 | | | | 41 | | | | 55 | | | | 65 | | |
| 84 | 1 | 3 | | | | | | | | | | 38 | | | | 51 | | | | 60 | | |
| 90 | 1 | 3 | | | | | | | | | | 36 | | | | 48 | | | | 56 | | |
| 96 | 1 | 3 | | | | | | | | | | 33 | | | | 45 | | | | 53 | | |
| 102 | 2 | 4 | | | | | | | | | | | | | | 42 | | | | 49 | | |
| 108 | 2 | 4 | | | | | | | | | | | | | | 39 | | | | 47 | | |
| 114 | 2 | 4 | | | | | | | | | | | | | | | | | | 42 | | |
| 120 | 2 | 4 | | | | | | | | | | | | | | | | | | 39 | | |
| 126 | 2 | 4 | | | | | | | | | | | | | | | | | | | | |

✳ FOR TRENCH INSTALLATION ONLY

## CORRUGATED H32 ALUMINUM CIRCULAR PIPE RIVETED SEAM

MAXIMUM ALLOWABLE OVERFILL HEIGHTS (1)

| SPECIFIED DIAMETER OF PIPE | MINIMUM COVER | | SPECIFIED THICKNEWW OF COATED SHEET (IN.) | | | | | | | | | | | | | | | | | | | |
|---|---|---|---|---|---|---|---|---|---|---|---|---|---|---|---|---|---|---|---|---|---|---|
| | | | 0.06 | | | | 0.075 | | | | 0.105 | | | | 0.135 | | | | 0.164 | | | |
| | CORRUGATED | SPIRAL RIB | SINGLE RIVET | | DOUBLE RIVET | | SINGLE RIVET | | DOUBLE RIVET | | SINGLE RIVET | | DOUBLE RIVET | | SINGLE RIVET | | DOUBLE RIVET | | SINGLE RIVET | | DOUBLE RIVET | |
| | | | A | B | A | B | A | B | A | B | A | B | A | B | A | B | A | B | A | B | A | B |
| IN. | FT. | FT. | FT. | FT. | FT. | FT. | FT. | FT. | FT. | FT. | FT. | FT. | FT. | FT. | FT. | FT. | FT. | FT. | FT. | FT. | FT. | FT. |
| 12 | 1 | 1 | 77 | | 120 | 141 | 77 | | 154 | 175 | 133 | | 269 | 239 | 138 | | 282 | 359 | 144 | | 291 | 466 |
| 15 | 1 | 1 | 62 | | 96 | 113 | 62 | | 123 | 140 | 107 | | 215 | 191 | 111 | | 226 | 287 | 115 | | 232 | 373 |
| 18 | 1 | 1 | 51 | | 80 | 94 | 51 | | 103 | 117 | 89 | | 179 | 160 | 92 | | 188 | 239 | 96 | | 194 | 311 |
| 21 | 1 | 1 | 44 | | 68 | 81 | 44 | | 88 | 100 | 76 | | 154 | 137 | 79 | | 161 | 205 | 82 | | 166 | 266 |
| 24 | 1 | 1 | 38 | | 60 | 71 | 38 | | 77 | 88 | 67 | | 135 | 120 | 69 | | 141 | 179 | 72 | | 145 | 233 |
| 30 | 1 | 2 | | | | 56 | 31 | | 62 | 70 | 53 | | 108 | 96 | 55 | | 113 | 144 | 57 | | 116 | 186 |
| 36 | 1 | 2 | | | | 47 | 26 | | 51 | 58 | 44 | | 90 | 80 | 46 | | 94 | 120 | 48 | | 97 | 155 |
| 42 | 1 | 2 | | | | 40 | | | | 50 | 38 | | 77 | 68 | 40 | | 81 | 103 | 41 | | 83 | 133 |
| 48 | 1 | 2 | | | | 35 | | | | 44 | 33 | | 67 | 60 | 35 | | 71 | 90 | 36 | | 73 | 116 |
| 54 | 1 | 2 | | | | 31 | | | | 39 | 30 | | 56 | 53 | 31 | | 63 | 80 | 32 | | 65 | 104 |
| 60 | 1 | 2 | | | | 28 | | | | 35 | | | | 48 | 28 | | 56 | 72 | 29 | | 58 | 93 |
| 66 | 1 | 2 | | | | 26 | | | | 32 | | | | 44 | | | | 65 | 26 | | 53 | 85 |
| 72 | 1 | 3 | | | | 24 | | | | 29 | | | | 40 | | | | 60 | 24 | | 47 | 78 |
| 78 | 1 | 3 | | | | | | | | 27 | | | | 37 | | | | 55 | | | | 72 |
| 84 | 1 | 3 | | | | | | | | | | | | 34 | | | | 51 | | | | 67 |
| 90 | 1 | 3 | | | | | | | | | | | | 32 | | | | 48 | | | | 62 |
| 96 | 1 | 3 | | | | | | | | | | | | 30 | | | | 45 | | | | 58 |
| 102 | 2 | 4 | | | | | | | | | | | | | | | | 42 | | | | 55 |
| 108 | 2 | 4 | | | | | | | | | | | | | | | | 40 | | | | 51 |
| 114 | 2 | 4 | | | | | | | | | | | | | | | | | | | | 46 |
| 120 | 2 | 4 | | | | | | | | | | | | | | | | | | | | 41 |
| 126 | 2 | 4 | | | | | | | | | | | | | | | | | | | | |

A = 2-2/3" X 1/2" CORRUGATIONS.
B = 3" X 1" CORRUGATIONS.
C = 5" X 1" CORRAGATIONS
D = 3/4" X 3/4" X 7-1/2" SPIRAL RIB

(1) MAXIMUM OVERFILL MEASURED FROM THE TOP OF PIPE TO SURFACE.

IF A SEAL IS PRESENT ON THIS SHEET IT HAS BEEN ELECTRONICALLY SEALED AND DATED.


MISSOURI HIGHWAYS AND TRANSPORTATION COMMISSION
105 WEST CAPITOL
JEFFERSON CITY, MO 65102
1-888-ASK-MODOT (1-888-275-6636)


STATE OF MISSOURI
KATHRYN PHILLIPS HARVEY
NUMBER PE-23751
PROFESSIONAL ENGINEER
THIS SHEET HAS BEEN SIGNED, SEALED AND DATED ELECTRONICALLY.

# CORRUGATED METAL PIPE INSTALLATION METHODS

DATE EFFECTIVE: 04/01/2011
DATE PREPARED: 3/9/2011

725.00C

## CORRUGATED H34 ALUMINUM CIRCULAR PIPE LOCK SEAM

MAXIMUM ALLOWABLE OVERFILL HEIGHTS (1)

| SPECIFIED DIAMETER OF PIPE | MINIMUM COVER | | SPECIFIED THICKNEWW OF COATED SHEET (IN.) | | | | | | | | | | | | | | | | | | | |
|---|---|---|---|---|---|---|---|---|---|---|---|---|---|---|---|---|---|---|---|---|---|---|
| | | | 0.06 | | | | 0.075 | | | | 0.105 | | | | 0.135 | | | | 0.164 | | | |
| | CORRUGATED | SPIRAL RIB | A | B | C | D | A | B | C | D | A | B | C | D | A | B | C | D | A | B | C | D |
| IN. | FT. | FT. | FT. | FT. | FT. | FT. | FT. | FT. | FT. | FT. | FT. | FT. | FT. | FT. | FT. | FT. | FT. | FT. | FT. | FT. | FT. | FT. |
| 12 | 1 | 1 | 159 | 183 | | 85 | 199 | 229 | | 117 | 278 | 320 | | 187 | 358 | 428 | | 265 | 437 | 504 | | |
| 15 | 1 | 1 | 127 | 183 | | 68 | 159 | 183 | | 93 | 223 | 256 | | 150 | 286 | 343 | | 212 | 350 | 403 | | |
| 18 | 1 | 1 | 106 | 213 | | 57 | 132 | 153 | | 78 | 185 | 213 | | 125 | 239 | 286 | | 176 | 291 | 336 | | |
| 21 | 1 | 1 | 91 | 245 | | 49 | 113 | 131 | | 67 | 159 | 183 | | 107 | 205 | 245 | | 151 | 250 | 288 | | |
| 24 | 1 | 1 | 79 | 252 | | 43 | 99 | 115 | | 58 | 139 | 160 | | 94 | 179 | 214 | | 132 | 218 | 252 | | |
| 30 | 1 | 2 | | 73 | | 34 | 79 | 92 | | 47 | 111 | 128 | | 75 | 143 | 171 | | 106 | 175 | 202 | | |
| 36 | 1 | 2 | | 61 | | 28* | 66 | 76 | | 39 | 93 | 107 | | 62 | 119 | 143 | | 88 | 146 | 168 | | |
| 42 | 1 | 2 | | 52 | | | | 66 | | 33* | 79 | 91 | | 54 | 102 | 122 | | 76 | 125 | 144 | | |
| 48 | 1 | 2 | | 46 | | | | 57 | | | 68 | 80 | | 47 | 89 | 107 | | 66 | 109 | 126 | | |
| 54 | 1 | 2 | | 41 | | | | 51 | | | 56 | 71 | | 42 | 73 | 95 | | 59 | 90 | 112 | | |
| 60 | 1 | 2 | | 37 | | | | 46 | | | | 64 | | 37* | 59 | 86 | | 53 | 73 | 101 | | |
| 66 | 1 | 2 | | 33 | | | | 42 | | | | 58 | | | | 78 | | 48 | 59 | 92 | | |
| 72 | 1 | 3 | | 30 | | | | 38 | | | | 53 | | | | 71 | | 42* | 47 | 84 | | |
| 78 | 1 | 3 | | | | | | 35 | | | | 49 | | | | 66 | | | | 78 | | |
| 84 | 1 | 3 | | | | | | | | | | 46 | | | | 61 | | | | 72 | | |
| 90 | 1 | 3 | | | | | | | | | | 43 | | | | 57 | | | | 67 | | |
| 96 | 1 | 3 | | | | | | | | | | 39 | | | | 53 | | | | 62 | | |
| 102 | 2 | 4 | | | | | | | | | | | | | | 48 | | | | 56 | | |
| 108 | 2 | 4 | | | | | | | | | | | | | | 43 | | | | 51 | | |
| 114 | 2 | 4 | | | | | | | | | | | | | | | | | | 46 | | |
| 120 | 2 | 4 | | | | | | | | | | | | | | | | | | 41 | | |
| 126 | 2 | 4 | | | | | | | | | | | | | | | | | | | | |

* FOR TRENCH INSTALLATION ONLY

## CORRUGATED H34 ALUMINUM CIRCULAR PIPE RIVETED SEAM

MAXIMUM ALLOWABLE OVERFILL HEIGHTS (1)

| SPECIFIED DIAMETER OF PIPE | MINIMUM COVER | | SPECIFIED THICKNEWW OF COATED SHEET (IN.) | | | | | | | | | | | | | | | | | | | |
|---|---|---|---|---|---|---|---|---|---|---|---|---|---|---|---|---|---|---|---|---|---|---|
| | | | 0.06 | | | | 0.075 | | | | 0.105 | | | | 0.135 | | | | 0.164 | | | |
| | CORRUGATED | SPIRAL RIB | SINGLE RIVET | | DOUBLE RIVET | | SINGLE RIVET | | DOUBLE RIVET | | SINGLE RIVET | | DOUBLE RIVET | | SINGLE RIVET | | DOUBLE RIVET | | SINGLE RIVET | | DOUBLE RIVET | |
| | | | A | B | A | B | A | B | A | B | A | B | A | B | A | B | A | B | A | B | A | B |
| IN. | FT. | FT. | FT. | FT. | FT. | FT. | FT. | FT. | FT. | FT. | FT. | FT. | FT. | FT. | FT. | FT. | FT. | FT. | FT. | FT. | FT. | FT. |
| 12 | 1 | 1 | 77 | | 120 | 141 | 77 | | 154 | 175 | 133 | | 269 | 239 | 138 | | 282 | 359 | 144 | | 291 | 466 |
| 15 | 1 | 1 | 62 | | 96 | 113 | 62 | | 123 | 140 | 107 | | 215 | 191 | 111 | | 226 | 287 | 115 | | 232 | 373 |
| 18 | 1 | 1 | 51 | | 80 | 94 | 51 | | 103 | 117 | 89 | | 179 | 160 | 92 | | 188 | 239 | 96 | | 194 | 311 |
| 21 | 1 | 1 | 44 | | 68 | 81 | 44 | | 88 | 100 | 76 | | 154 | 137 | 79 | | 161 | 205 | 82 | | 166 | 266 |
| 24 | 1 | 1 | 38 | | 60 | 71 | 38 | | 77 | 88 | 67 | | 135 | 120 | 69 | | 141 | 179 | 72 | | 145 | 233 |
| 30 | 1 | 2 | | | | 56 | 31 | | 62 | 70 | 53 | | 108 | 96 | 55 | | 113 | 144 | 57 | | 116 | 186 |
| 36 | 1 | 2 | | | | 47 | 26 | | 51 | 58 | 44 | | 90 | 80 | 46 | | 94 | 120 | 48 | | 97 | 155 |
| 42 | 1 | 2 | | | | 40 | | | | 50 | 38 | | 77 | 68 | 40 | | 81 | 103 | 41 | | 83 | 133 |
| 48 | 1 | 2 | | | | 35 | | | | 44 | 33 | | 67 | 60 | 35 | | 71 | 90 | 36 | | 73 | 116 |
| 54 | 1 | 2 | | | | 31 | | | | 39 | 30 | | 56 | 53 | 31 | | 63 | 80 | 32 | | 65 | 104 |
| 60 | 1 | 2 | | | | 28 | | | | 35 | | | | 48 | 28 | | 56 | 72 | 29 | | 58 | 93 |
| 66 | 1 | 2 | | | | 26 | | | | 32 | | | | 44 | | | | 65 | 26 | | 53 | 85 |
| 72 | 1 | 3 | | | | 24 | | | | 29 | | | | 40 | | | | 60 | 24 | | 47 | 78 |
| 78 | 1 | 3 | | | | | | | | 27 | | | | 37 | | | | 55 | | | | 72 |
| 84 | 1 | 3 | | | | | | | | | | | | 34 | | | | 51 | | | | 67 |
| 90 | 1 | 3 | | | | | | | | | | | | 32 | | | | 48 | | | | 62 |
| 96 | 1 | 3 | | | | | | | | | | | | 30 | | | | 45 | | | | 58 |
| 102 | 2 | 4 | | | | | | | | | | | | | | | | 42 | | | | 55 |
| 108 | 2 | 4 | | | | | | | | | | | | | | | | 40 | | | | 51 |
| 114 | 2 | 4 | | | | | | | | | | | | | | | | | | | | 46 |
| 120 | 2 | 4 | | | | | | | | | | | | | | | | | | | | 41 |
| 126 | 2 | 4 | | | | | | | | | | | | | | | | | | | | |

A = 2-2/3" X 1/2" CORRUGATIONS.
B = 3" X 1" CORRUGATIONS.
C = 5" X 1" CORRAGATIONS
D = 3/4" X 3/4" X 7-1/2" SPIRAL RIB

(1) MAXIMUM OVERFILL MEASURED FROM THE TOP OF PIPE TO SURFACE.

IF A SEAL IS PRESENT ON THIS SHEET IT HAS BEEN ELECTRONICALLY SEALED AND DATED.


MISSOURI HIGHWAYS AND TRANSPORTATION COMMISSION
105 WEST CAPITOL
JEFFERSON CITY, MO 65102
1-888-ASK-MODOT (1-888-275-6636)


STATE OF MISSOURI
KATHRYN PHILLIPS HARVEY
NUMBER PE-23751
PROFESSIONAL ENGINEER
THIS SHEET HAS BEEN SIGNED, SEALED AND DATED ELECTRONICALLY.

# CORRUGATED METAL PIPE INSTALLATION METHODS

DATE EFFECTIVE: 04/01/2011
DATE PREPARED: 3/9/2011

725.00C

## MINIMUM COVER FOR CONSTRUCTION LOADS (ROUND AND PIPE-ARCH)

| DIAMETER OR PIPE SPAN | MINIMUM COVER (FT.) FOR INDICATED AXLE LOADS (2) | | | |
|---|---|---|---|---|
| | 18K LBS.-50K LBS. | 50K LBS.-75K LBS. | 75K LBS.-110K LBS. | 110K LBS.-150K LBS. |
| IN. | FT. | FT. | FT. | FT. |
| 12-42 | 2.0 | 2.5 | 3.0 | 3.0 |
| 48-72 | 3.0 | 3.0 | 3.5 | 4.0 |
| 78-120 | 3.0 | 3.5 | 4.0 | 4.0 |
| 126-144 | 3.5 | 4.0 | 4.5 | 4.5 |

THE CONTRACTOR SHALL PROVIDE MINIMUM COVER PLUS ANY ADDITIONAL COVER REQUIRED TO AVOID DAMAGE TO THE PIPE. IN UNPAVED SITUATIONS, THE SURFACE MUST BE MAINTAINED TO A LEVEL AND NON-RUTTED CONDITION.

## PIPE-ARCH REQUIREMENTS 2-2/3" X 1/2" CORRUGATIONS

| TYPE | SPAN (3) | RISE (3) | GALVANIZED SHEET THICKNESS - GAUGE |
|---|---|---|---|
| | (IN.) | (IN.) | (IN.) |
| B1 | 17 | 13 | 0.064 - 16 |
| B2 | 21 | 15 | 0.064 - 16 |
| B3 | 24 | 18 | 0.064 - 16 |
| B4 | 28 | 20 | 0.064 - 16 |
| B5 | 35 | 24 | 0.064 - 16 |
| B6 | 42 | 29 | 0.079 - 14 |
| B7 | 49 | 33 | 0.109 - 12 |
| B8 | 57 | 38 | 0.109 - 12 |
| B9 | 64 | 43 | 0.109 - 12 |
| B10 | 71 | 47 | 0.138 - 10 |
| B11 | 77 | 52 | 0.168 - 8 |
| B12 | 83 | 57 | 0.168 - 8 |

## PIPE-ARCH REQUIREMENTS 3" X 1" AND 5" X 1" CORRUGATIONS

| TYPE | SPAN (4) | RISE (4) | GALVANIZED SHEET THICKNESS - GAUGE | GALVANIZED SHEET THICKNESS - GAUGE | MINIMUM COVER (2) |
|---|---|---|---|---|---|
| | (IN.) | (IN.) | (IN.) | (IN.) | (IN.) |
| B8A | 53 (-2.4) | 41 (+2.4) | 0.079 - 14 | 0.109 - 12 | 12 |
| B9A | 60 (-2.7) | 46 (+2.7) | 0.079 - 14 | 0.109 - 12 | 15 |
| B10A | 66 (-3.0) | 51 (+3.0) | 0.079 - 14 | 0.109 - 12 | 15 |
| B11A | 73 (-3.3) | 55 (+3.3) | 0.079 - 14 | 0.109 - 12 | 18 |
| B12A | 81 (-3.6) | 59 (+3.6) | 0.079 - 14 | 0.109 - 12 | 18 |
| B13A | 87 (-4.4) | 63 (+4.4) | 0.079 - 14 | 0.109 - 12 | 18 |
| B14A | 95 (-4.8) | 67 (+4.8) | 0.079 - 14 | 0.109 - 12 | 18 |
| B15A | 103 (-5.2) | 71 (+5.2) | 0.079 - 14 | 0.109 - 12 | 18 |
| B16A | 112 (-5.6) | 75 (+5.6) | 0.109 - 12 | 0.109 - 12 | 21 |
| B17A | 117 (-5.9) | 79 (+5.9) | 0.109 - 12 | 0.109 - 12 | 21 |
| B18A | 128 (-6.4) | 83 (+6.4) | 0.109 - 12 | 0.109 - 12 | 24 |
| B19A | 137 (-6.9) | 87 (+6.9) | 0.109 - 12 | 0.109 - 12 | 24 |
| B20A | 142 (-7.1) | 91 (+7.1) | 0.138 - 10 | 0.138 - 10 | 24 |

(2) MINIMUM COVER MEASURED FROM TOP OF PIPE TO BOTTOM OF FLEXIBLE PAVEMENT OR TOP OF RIGID PAVEMENT.

(3) A TOLERANCE OF PLUS OR MINUS ONE INCH OR 2 PERCENT OF EQUIVALENT CIRCULAR DIAMETER, WHICHEVER IS GREATER, WILL BE PERMISSIBLE IN SPAN AND RISE.

(4) TOLERANCES IN PARENTHESES. NO TOLERANCE IN OPPOSITE DIRECTION.

IF A SEAL IS PRESENT ON THIS SHEET IT HAS BEEN ELECTRONICALLY SEALED AND DATED.

MISSOURI HIGHWAYS AND TRANSPORTATION COMMISSION
105 WEST CAPITOL
JEFFERSON CITY, MO 65102
1-888-ASK-MODOT (1-888-275-6636)

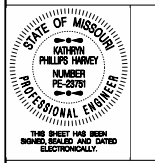


# CORRUGATED METAL PIPE INSTALLATION METHODS

DATE EFFECTIVE: 04/01/2011
DATE PREPARED: 3/9/2011

725.00C

SHEET NO. 5 OF 5

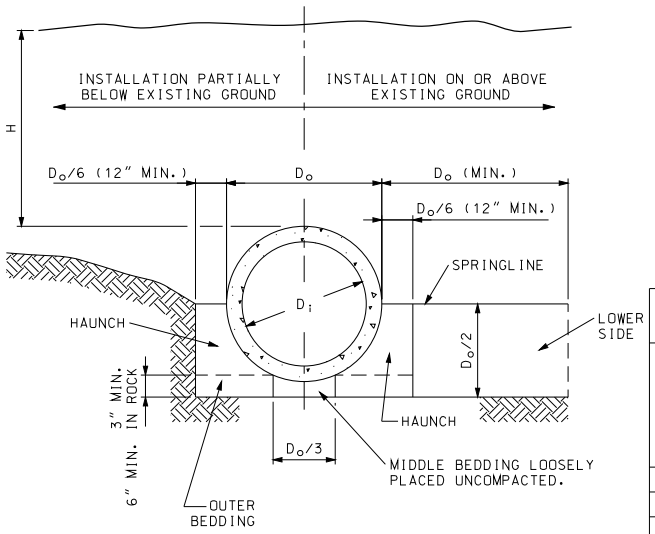


## EMBANKMENT INSTALLATIONS

CONSTRUCTION SEQUENCE
1. PLACE BEDDING MATERIAL TO GRADE. DO NOT COMPACT.
2. INSTALL PIPE TO GRADE.
3. COMPACT BEDDING OUTSIDE THE MIDDLE THIRD OF THE PIPE.
4. PLACE AND COMPACT THE HAUNCH AREA UP TO THE SPRINGLINE.
5. COMPLETE BACKFILL ACCORDING TO SPECIFICATIONS.

## MAXIMUM DIAMETER AND MAXIUM FILL HEIGHT

| INSTALLATION TYPE | CLASS OF PIPE | | | | |
|---|---|---|---|---|---|
| | CLASS I | CLASS II | CLASS III | CLASS IV | CLASS V |
| | MAXIMUM DIAMETER (INCHES) | | | | |
| | 108 | 108 | 108 | 84 | 72 |
| | MAXIMUM FILL HEIGHT IN (FEET) | | | | |
| TYPE 1 | 12 | 15 | 21 | 33 | 51 |
| TYPE 2 | 9 | 12 | 17 | 26 | 39 |
| TYPE 3 | 7 | 9 | 13 | 20 | 30 |
| TYPE 4 | 4 | 6 | 9 | 13 | 20 |

IF FILL HEIGHT EXCEEDS 51 FEET AND PIPE DIAMETER IS 36 INCHES OR LESS A SPECIAL PIPE DESIGN AND INSTALLATION PROCEDURE SHALL BE REQUIRED. IF FILL HEIGHT EXCEEDS 51 FEET AND PIPE DIAMETER IS GREATER THAN 36 INCHES A SPECIAL DESIGN PIPE IS NOT ALLOWED.

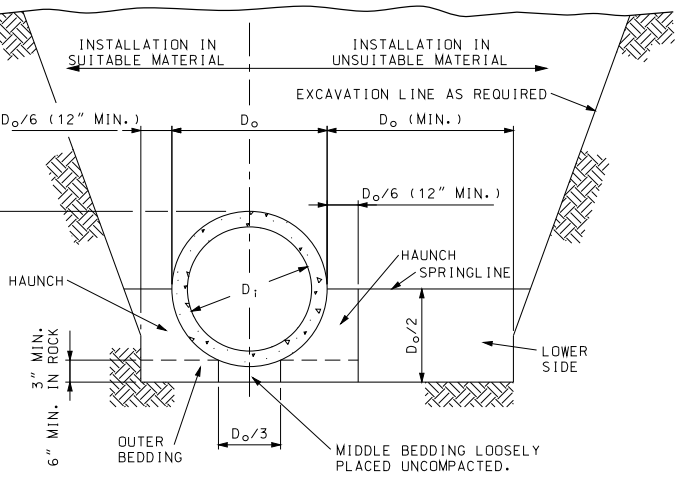


## TRENCH INSTALLATION

- LEGEND -

$D_i$ = NORMAL INSIDE DIAMETER OF PIPE.
$D_o$ = OUTSIDE DIAMETER OF PIPE.
H = FILL COVER HEIGHT OVER PIPE (FEET)
MIN. = MINIMUM
= UNDISTURBED SOIL

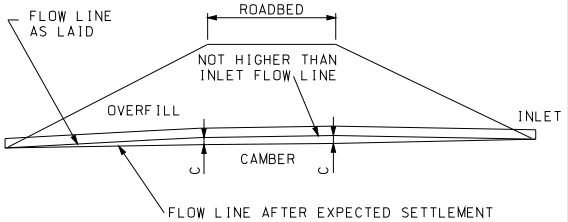


NOTE:
ON YIELDING SOIL, PIPE CULVERTS SHALL BE PLACED ON A CAMBERED FLOW LINE. THE AMOUNT OF CAMBER WILL VARY WITH SOIL CONDITION AND SHALL BE SPECIFIED ON THE DESIGN PLANS.

## TYPICAL CAMBERED FLOW LINE

## BEDDING AND COMPACTION REQUIREMENTS

| INSTALLATION TYPE | BEDDING THICKNESS | COMPACTION REQUIREMENTS (MIN. STANDARD PROCTOR %) | | | | | |
|---|---|---|---|---|---|---|---|
| | | HAUNCH AND OUTER BEDDING | | | LOWER SIDE BEDDING | | |
| | | CATEGORY 1 SOIL (A) | CATEGORY 2 SOIL (B) | CATEGORY 3 SOIL (C) | CATEGORY 1 SOIL (A) | CATEGORY 2 SOIL (B) | CATEGORY 3 SOIL (C) |
| 1 | $D_o$/24 MINIMUM, NOT LESS THAN 3". IF ROCK FOUNDATION, USE $D_o$/12 MIMIMUM, NOT LESS THAN 6". | 95 | N/A | N/A | 90 | 95 | 100 |
| 2 | $D_o$/24 MINIMUM, NOT LESS THAN 3". IF ROCK FOUNDATION, USE $D_o$/12 MIMIMUM, NOT LESS THAN 6". | 90 | 95 | N/A | 85 | 90 | 95 |
| 3 | $D_o$/24 MINIMUM, NOT LESS THAN 3". IF ROCK FOUNDATION, USE $D_o$/12 MIMIMUM, NOT LESS THAN 6". | 85 | 90 | 95 | 85 | 90 | 95 |
| 4 | $D_o$/24 MINIMUM, NOT LESS THAN 3". IF ROCK FOUNDATION, USE $D_o$/12 MIMIMUM, NOT LESS THAN 6". | NO COMPACTION REQUIRED | NO COMPACTION REQUIRED | 85 | NO COMPACTION REQUIRED | NO COMPACTION REQUIRED | 85 |

(A) GRAVELLY SAND
(B) SANDY-SILT
(C) SILTY CLAY

GENERAL NOTES:

MULTIPLE PIPE CULVERTS SHALL BE INSTALLED WITH A MINIMUM CLEARANCE BETWEEN PIPES OF $\frac{1}{2}$ $D_o$ OR 12", WHICHEVER IS GREATER, BUT NOT TO EXCEED 36".

CLASS I AND CLASS II REINFORCED CONCRETE PIPE SHALL ONLY BE USED FOR SEWERS IN TRENCHES OUTSIDE ROADBED AND STREET LIMITS.

MISSOURI HIGHWAYS AND TRANSPORTATION COMMISSION
105 WEST CAPITOL
JEFFERSON CITY, MO 65102
1-888-ASK-MODOT (1-888-275-6636)

STATE OF MISSOURI
KATHRYN PHILLIPS HARVEY
NUMBER PE-23751
PROFESSIONAL ENGINEER
THIS SHEET HAS BEEN SIGNED, SEALED AND DATED ELECTRONICALLY.

# RIGID CULVERT INSTALLATION METHODS
REINFORCED CONCRETE PIPE CULVERTS

DATE EFFECTIVE: 02/01/2012
DATE PREPARED: 12/19/2011

726.30H

SHEET NO. 1 OF 2

IF A SEAL IS PRESENT ON THIS SHEET IT HAS BEEN ELECTRONICALLY SEALED AND DATED.

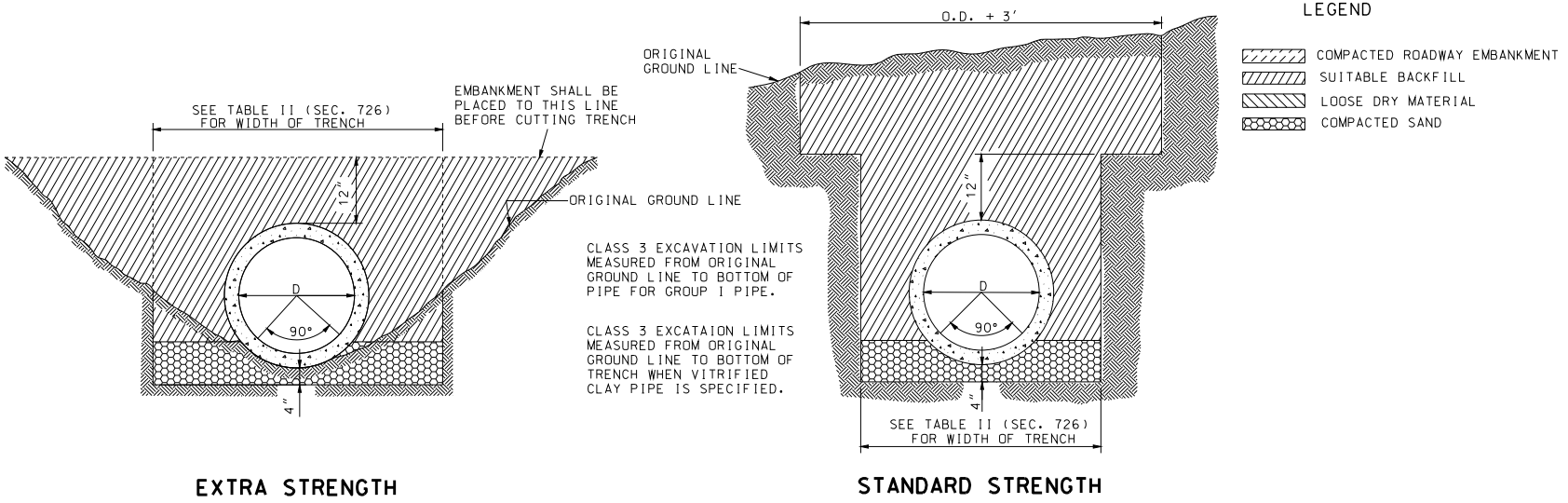


**EXTRA STRENGTH**

**STANDARD STRENGTH**

| HEIGHT OF FILL OVER V.C. PIPE CULVERTS | | | | | | |
|---|---|---|---|---|---|---|
| | STANDARD STRENGTH | | | EXTRA STRENGTH | | |
| NOMINAL PIPE DIAMETER (INCH) | TRENCH WIDTH AT ONE FOOT ABOVE TOP OF PIPE (FEET) | MINIMUM FILL HEIGHT (FEET) | MAXIMUM FILL HEIGHT (FEET) | TRENCH WIDTH AT ONE FOOT ABOVE TOP OF PIPE (FEET) | MINIMUM FILL HEIGHT (FEET) | MAXIMUM FILL HEIGHT (FEET) |
| 6 | 2.0 | 1.0 | 9.0 | | | |
| 8 | 2.0 | 1.0 | 7.0 | 2.5 | 4.0 | 12.0 |
| 10 | 2.5 | 1.0 | 7.0 | 2.5 | 4.0 | 12.0 |
| 12 | 2.7 | 1.0 | 6.0 | 3.0 | 4.0 | 13.0 |
| 15 | 3.5 | 1.0 | 6.0 | 3.0 | 4.0 | 17.0 |
| 18 | 3.5 | 1.0 | 6.0 | 3.5 | 4.0 | 17.0 |
| 21 | 4.0 | 1.0 | 6.0 | 4.0 | 4.0 | 17.0 |
| 24 | 4.0 | 1.0 | 8.0 | 4.0 | 3.0 | 19.0 |
| 30 | 4.5 | 1.0 | 10.0 | 4.5 | 3.0 | 19.0 |
| 36 | 5.0 | 1.0 | 11.0 | 5.0 | 3.0 | 19.0 |

MISSOURI HIGHWAYS AND TRANSPORTATION COMMISSION
105 WEST CAPITOL
JEFFERSON CITY, MO 65102
1-888-ASK-MODOT (1-888-275-6636)

STATE OF MISSOURI
KATHRYN PHILLIPS HARVEY
NUMBER PE-23751
PROFESSIONAL ENGINEER
THIS SHEET HAS BEEN SIGNED, SEALED AND DATED ELECTRONICALLY.

# RIGID CULVERT INSTALLATION METHODS

VITRIFIED CLAY PIPE CULVERTS

DATE EFFECTIVE: 02/01/2012
DATE PREPARED: 12/19/2011

726.30H

SHEET NO. 2 OF 2

IF A SEAL IS PRESENT ON THIS SHEET IT HAS BEEN ELECTRONICALLY SEALED AND DATED.

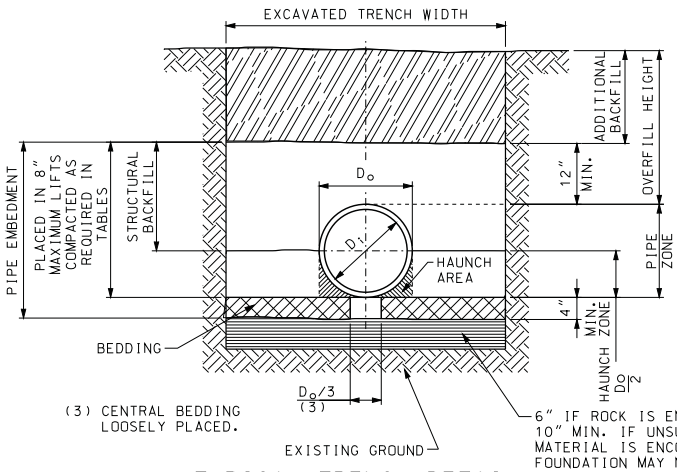


## TYPICAL TRENCH DETAIL

| PIPE SIZE | S (IN.) | X (IN.) |
|---|---|---|
| 12 | 12 | 9 |
| 15 | 12 | 9 |
| 18 | 12 | 9 |
| 24 | 12 | 10 |
| 30 | 15 | 16 |
| 36 | 18 | 18 |
| 42 | 21 | 18 |
| 48 | 24 | 18 |

### CONSTRUCTION SEQUENCE

1. PLACE BEDDING MATERIAL TO GRADE AS REQUIRED IN TABLES.
2. COMPACT BEDDING OUTSIDE THE MIDDLE THIRD OF THE PIPE.
3. INSTALL PIPE TO GRADE.
4. PLACE AND COMPACT THE HAUNCH AREA UP TO THE SPRINGLINE.
5. COMPLETE BACKFILL ACCORDING TO SPECIFICATIONS.

### LEGEND

$D_i$ = NORMAL INSIDE DIAMETER OF PIPE.
$D_o$ = OUTSIDE DIAMETER OF PIPE.
H = FILL COVER HEIGHT OVER PIPE (FEET).
MIN. = MINIMUM
MAX. = MAXIMUM

= UNDISTURBED SOIL

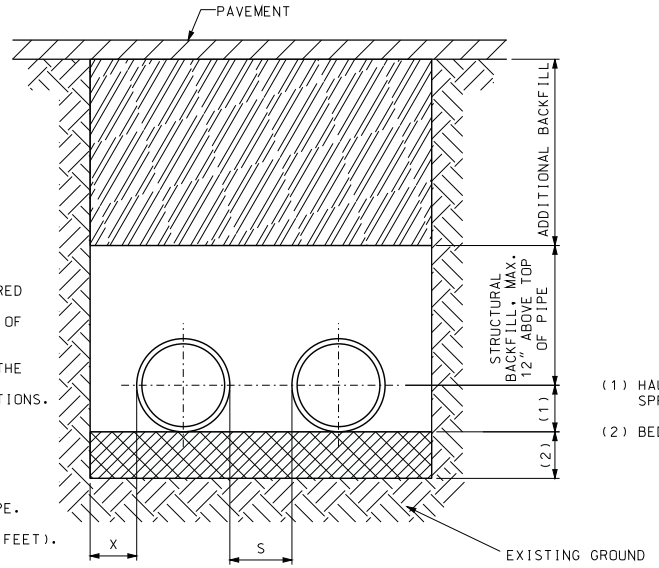


## PARALLEL PIPE INSTALLATION

TYPICAL TRENCH CROSS-SECTION

(FOR PIPE INSTALLATION DETAILS, SEE TYPICAL TRENCH DETAILS.)

## FILL LIMITS FOR THERMOPLASTIC PIPE

GRAVELLY SAND STRUCTURAL BACKFILL (Sn TYPES A1 & A3)

| SPECIFIED DIA OF PIPE (IN.) | TRENCH WIDTH (IN.) | PE | | | | SRPE | | | | PVC | | | | PP | | | |
|---|---|---|---|---|---|---|---|---|---|---|---|---|---|---|---|---|---|
| | | COMPACTION 90% S.P.D. | | COMPACTION 95% S.P.D. | | COMPACTION 90% S.P.D. | | COMPACTION 95% S.P.D. | | COMPACTION 90% S.P.D. | | COMPACTION 95% S.P.D. | | COMPACTION 90% S.P.D. | | COMPACTION 95% S.P.D. | |
| | | MIN. | MAX. | MIN. | MAX. | MIN. | MAX. | MIN. | MAX. | MIN. | MAX. | MIN. | MAX. | MIN. | MAX. | MIN. | MAX. |
| 12 | 34 | 2 | 19 | 2 | 26 | -- | -- | -- | -- | 2 | 32 | 2 | 52 | 2 | 20 | 2 | 27 |
| 15 | 39 | 2 | 20 | 2 | 28 | -- | -- | -- | -- | 2 | 32 | 2 | 47 | 2 | 21 | 2 | 29 |
| 18 | 44 | 2 | 17 | 2 | 24 | -- | -- | -- | -- | 2 | 33 | 2 | 51 | 2 | 18 | 2 | 25 |
| 24 | 55 | 2 | 14 | 2 | 20 | 2 | 50 | -- | -- | 2 | 33 | 2 | 48 | 2 | 15 | 2 | 21 |
| 30 | 67 | 2.5 | 12 | 2 | 17 | 2 | 50 | -- | -- | 2 | 33 | 2 | 46 | 2 | 15 | 2 | 21 |
| 36 | 76 | 2 | 13 | 2 | 19 | 2 | 50 | -- | -- | 2 | 33 | 2 | 47 | 2 | 13 | 2 | 19 |
| 42 | 84 | 2 | 13 | 2 | 19 | -- | -- | -- | -- | -- | -- | -- | -- | 2 | 18 | 2 | 25 |
| 48 | 95 | 2 | 11 | 2 | 17 | -- | -- | -- | -- | -- | -- | -- | -- | 2 | 11 | 2 | 15 |
| SANDY-SILT STRUCTURAL BACKFILL (Sn TYPES A1 & A3) | | | | | | | | | | | | | | | | | |
| 12 | 34 | 3.8 | 10 | 2 | 19 | -- | -- | -- | -- | 3.1 | 15 | 2 | 33 | 3.5 | 11 | 2 | 21 |
| 15 | 39 | 3.7 | 10 | 2 | 21 | -- | -- | -- | -- | 3.1 | 15 | 2 | 33 | 3.5 | 11 | 2 | 21 |
| 18 | 44 | 3.9 | 10 | 2 | 17 | -- | -- | -- | -- | 3.1 | 15 | 2 | 34 | 3.6 | 10 | 2 | 19 |
| 24 | 55 | 4.2 | 7 | 2 | 15 | 2 | 50 | -- | -- | 3 | 15 | 2 | 34 | 3.8 | 10 | 2 | 16 |
| 30 | 67 | 4.4 | 6 | 2.5 | 12 | 2 | 50 | -- | -- | 3 | 15 | 2 | 33 | 3.7 | 10 | 2 | 16 |
| 36 | 76 | 4.4 | 6 | 2 | 14 | 2 | 50 | -- | -- | 3 | 15 | 2 | 33 | 3.9 | 9 | 2 | 14 |
| 42 | 84 | 4.3 | 7 | 2 | 13 | -- | -- | -- | -- | -- | -- | -- | -- | 3.6 | 10 | 2 | 18 |
| 48 | 95 | 4.7 | 6 | 2 | 12 | -- | -- | -- | -- | -- | -- | -- | -- | 4 | 7 | 2 | 11 |

NOTE: MAXIMUM OVERFILL MEASURED FROM THE TOP OF PIPE TO SURFACE.

FILL LIMITS ACCOUNT FOR SHORT-TERM TEMPORARY WATER TABLE DEPTHS OF FIVE FEET ABOVE SPRINGLINE. TABLES ARE NOT APPLICABLE FOR LONG-TERM PERMANENT WATER TABLE DEPTHS ABOVE SPRINGLINE.

WHEN PIPES ARE USED AS GROUP A, FILL HEIGHTS ARE LIMITED TO SHADED VALUES.

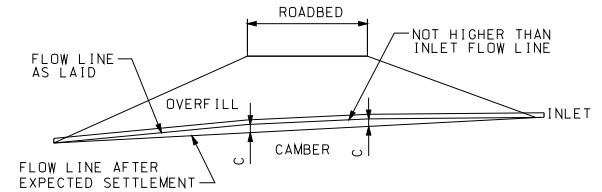


NOTE:

ON YIELDING SOIL, PIPE CULVERTS SHALL BE PLACED ON A CAMBERED FLOW LINE. THE AMOUNT OF CAMBER WILL VARY WITH SOIL CONDITION AND WILL BE SPECIFIED ON THE DESIGN PLANS.

## TYPICAL CAMBERED FLOW LINE

## MINIMUM COVER FOR CONSTRUCTION LOADS

| PIPE DIA. (IN.) | MINIMUM COVER (FT) FOR INDICATED AXLE LOADS (THOUSANDS OF POUNDS) | | | |
|---|---|---|---|---|
| | 18-50 | 50-75 | 75-110 | 110-150 |
| 12-36 | 2.0 | 2.5 | 3.0 | 3.0 |
| 42-48 | 3.0 | 3.0 | 3.5 | 4.0 |

MINIMUM COVER LIMITS ARE NOT SUFFICIENT FOR SANDY-SILT STRUCTURAL BACKFILL COMPACTED TO 90% S.P.D. THE CONTRACTOR SHALL PROVIDE MINIMUM COVER PLUS ANY ADDITIONAL COVER REQUIRED TO AVOID DAMAGE TO THE PIPE. IN UNPAVED SITUATIONS, THE SURFACE MUST BE MAINTAINED TO A LEVEL AND NON-RUTTED CONDITION.


MISSOURI HIGHWAYS AND TRANSPORTATION COMMISSION
105 WEST CAPITOL
JEFFERSON CITY, MO 65102
1-888-ASK-MODOT (1-888-275-6636)


STATE OF MISSOURI
KATHRYN PHILLIPS HARVEY
NUMBER PE-23751
PROFESSIONAL ENGINEER
THIS SHEET HAS BEEN SIGNED, SEALED AND DATED ELECTRONICALLY.

# THERMOPLASTIC PIPE INSTALLATION METHODS

DATE EFFECTIVE: 04/01/2011
DATE PREPARED: 3/31/2011

730.00D

SHEET NO. 1 OF 1

IF A SEAL IS PRESENT ON THIS SHEET IT HAS BEEN ELECTRONICALLY SEALED AND DATED.

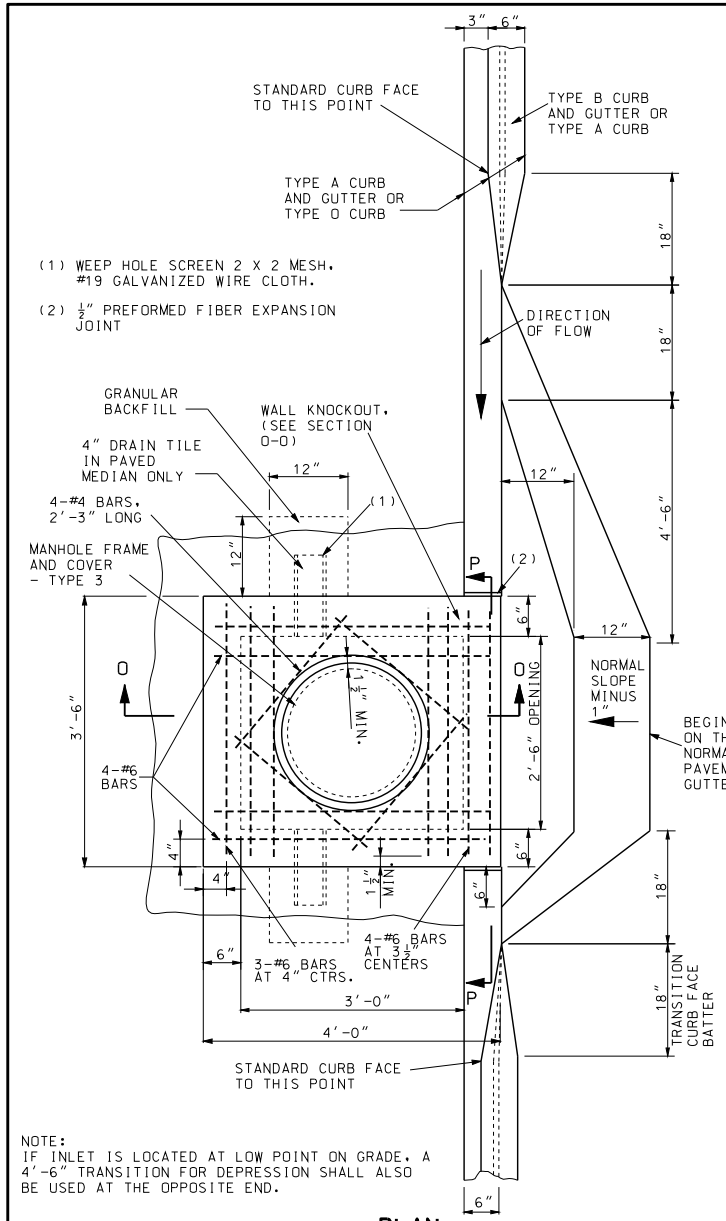


PLAN

NOTE:
IF INLET IS LOCATED AT LOW POINT ON GRADE, A 4'-6" TRANSITION FOR DEPRESSION SHALL ALSO BE USED AT THE OPPOSITE END.

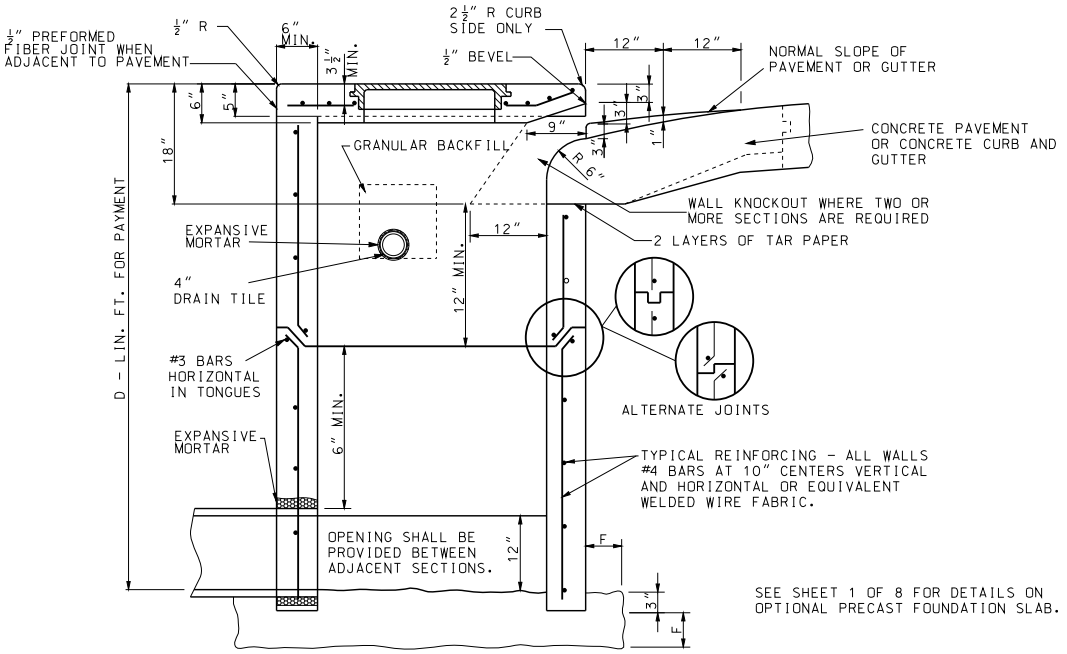


SECTION O-O

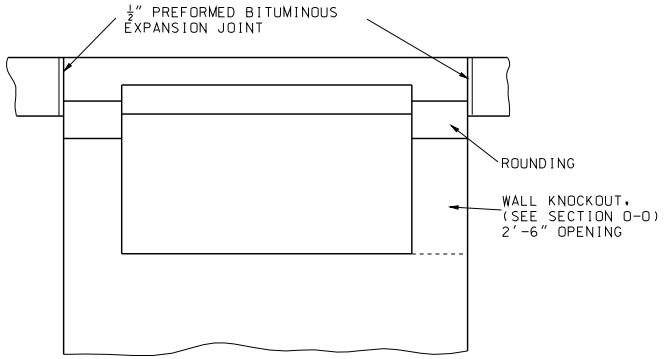


SECTION P-P
DETAILS OF OPENING

IF A SEAL IS PRESENT ON THIS SHEET IT HAS BEEN ELECTRONICALLY SEALED AND DATED.

MISSOURI HIGHWAYS AND TRANSPORTATION COMMISSION
105 WEST CAPITOL
JEFFERSON CITY, MO 65102
1-888-ASK-MODOT (1-888-275-6636)

STATE OF MISSOURI
KATHRYN PHILLIPS HARVEY
NUMBER PE-23751
PROFESSIONAL ENGINEER
THIS SHEET HAS BEEN SIGNED, SEALED AND DATED ELECTRONICALLY.

# PRECAST DROP INLET
## CURB INLET - TYPE T

DATE EFFECTIVE: 12/01/2005
DATE PREPARED: 9/3/2010

731.10R

SHEET NO. 5 OF 8

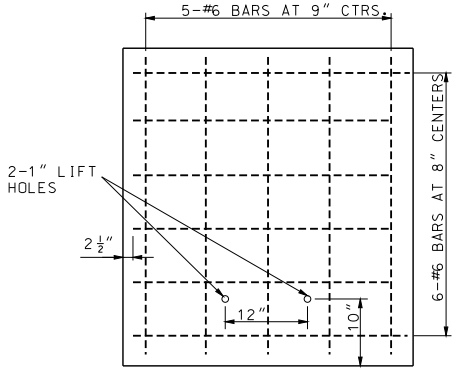


NOTE: REINFORCING FOR LIDS ON UPSTREAM SECTIONS.

## LID FOR ADJACENT SECTIONS

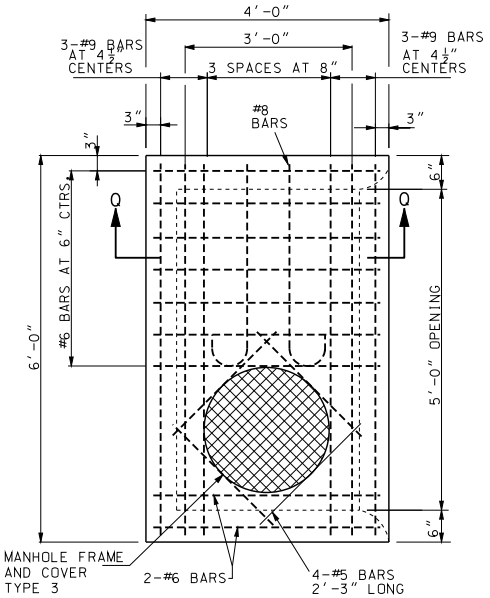


PLAN

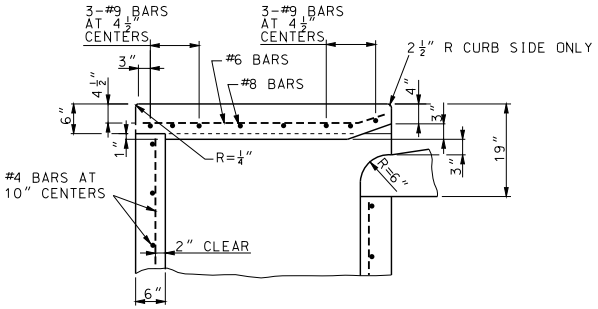


SECTION Q-Q

## OPTIONAL PRECAST CURB INLET 5'-0" OPENING

OTHER DETAILS ARESAME AS FOR THE 2'-6" OPENING DROP INLET THIS SHEET.

GENERAL NOTES:

NOTES PERTAINING TO TYPE T:

THE LENGTH AND DEPTH OF THE INLET SHALL BE AS SHOWN ON THE PLANS.

WALLS BETWEEN THE ADJACENT SECTIONS SHALL BE SEALED IN ACCORDANCE WITH SECTION 726.3.1 OF THE STANDARD SPECIFICATIONS.

IF DEPTH OF INLET EXCEEDS 6 FEET THE PRECAST UNITS MAY BE FURNISHED IN TWO OR MORE SECTIONS.

IF TWO OR MORE SECTIONS ARE USED, THE TYPE 3 MANHOLE FRAME AND COVER SHALL BE IN THE DOWNSTREAM SECTION ONLY.

IF A 5 FOOT OPENING IS REQUIRED, TWO 2'-6" OPENING SECTIONS OR ONE 5 FOOT OPEING SECTION MAY BE PROVIDED AT THE CONTRACTOR'S OPTION.

SEE SHEET 1 FOR STEP DETAILS AND SHEET 4 FOR GENERAL NOTES.

MISSOURI HIGHWAYS AND TRANSPORTATION COMMISSION
105 WEST CAPITOL
JEFFERSON CITY, MO 65102
1-888-ASK-MODOT (1-888-275-6636)

STATE OF MISSOURI
KATHRYN PHILLIPS HARVEY
NUMBER PE-23751
PROFESSIONAL ENGINEER
THIS SHEET HAS BEEN SIGNED, SEALED AND DATED ELECTRONICALLY.

# PRECAST DROP INLET
CURB INLET - TYPE T

| DATE EFFECTIVE: | 12/01/2005 | 731.10R | SHEET NO. 6 OF 8 |
|---|---|---|---|
| DATE PREPARED: | 9/3/2010 | | |

IF A SEAL IS PRESENT ON THIS SHEET IT HAS BEEN ELECTRONICALLY SEALED AND DATED.

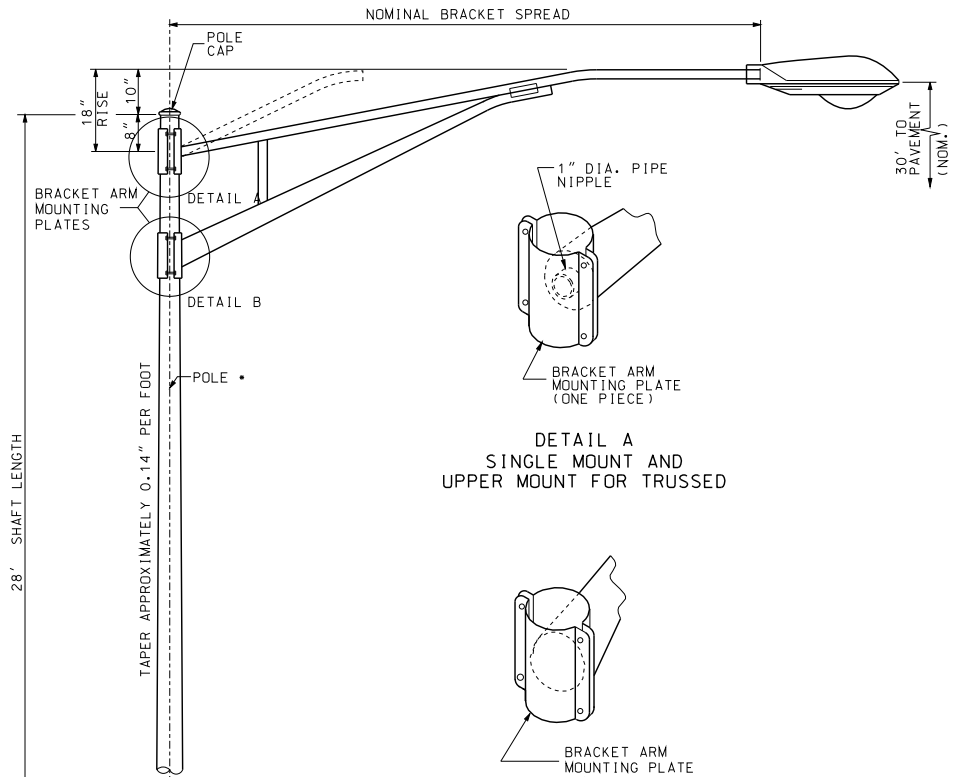





DETAIL A
SINGLE MOUNT AND
UPPER MOUNT FOR TRUSSED




DETAIL B
LOWER MOUNT FOR TRUSSED

**TYPICAL BRACKET ARM MOUNTING**

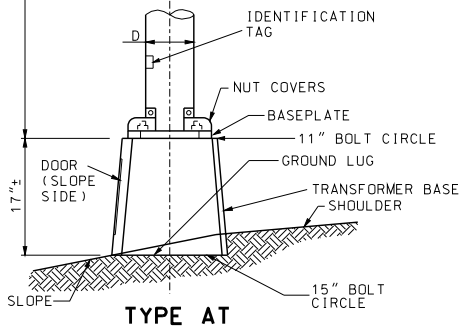


**TYPE AT**

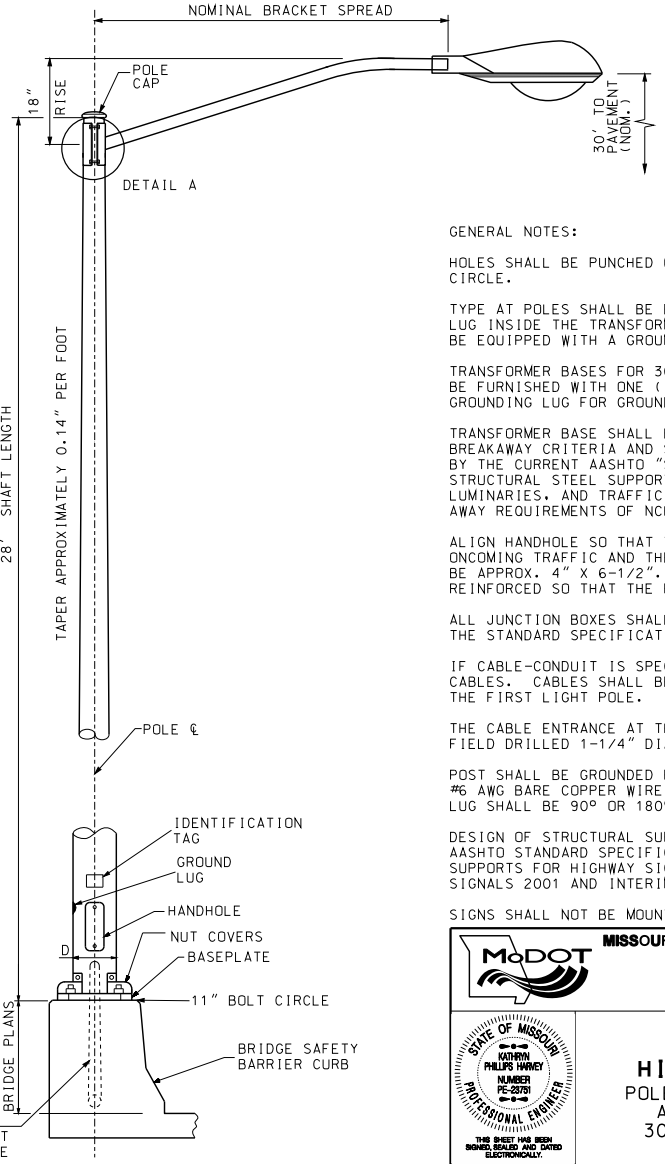


WIRES SHALL BE SPLICED AT FUSED CONNECTOR IN POLE BASE. IF CABLE-CONDUIT IS SPECIFIED, CUT CONDUIT AWAY FROM THE CABLES WHERE CABLE-CONDUIT ENTERS THE RIGID CONDUIT SYSTEM. (SEE DRAWING 901.02)

**TYPE B**

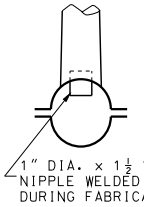


PLAN VIEW OF DETAIL A

GENERAL NOTES:

HOLES SHALL BE PUNCHED ONLY FOR SPECIFIED BOLT CIRCLE.

TYPE AT POLES SHALL BE EQUIPPED WITH THE GROUNDING LUG INSIDE THE TRANSFORMER BASE. TYPE B POLES SHALL BE EQUIPPED WITH A GROUNDING LUG INSIDE THE POLE.

TRANSFORMER BASES FOR 30 FOOT MOUNTING HEIGHT SHALL BE FURNISHED WITH ONE (1) DRILLED AND TAPPED HOLE AND GROUNDING LUG FOR GROUNDING EQUIPMENT.

TRANSFORMER BASE SHALL BE CERTIFIED AS MEETING THE BREAKAWAY CRITERIA AND STRUCTURAL REQUIREMENTS AS SET BY THE CURRENT AASHTO "STANDARD SPECIFICATIONS FOR STRUCTURAL STEEL SUPPORTS FOR HIGHWAY SIGNS, LUMINARIES, AND TRAFFIC SIGNALS" AND MEET THE BREAK-AWAY REQUIREMENTS OF NCHRP 350.

ALIGN HANDHOLE SO THAT THE POLE IS BETWEEN THE ONCOMING TRAFFIC AND THE HANDHOLE. HANDHOLE SHALL BE APPROX. 4" X 6-1/2". HANDHOLE FRAME SHALL BE REINFORCED SO THAT THE POLE STRENGTH IS NOT REDUCED.

ALL JUNCTION BOXES SHALL CONFORM TO SECTION 1062 OF THE STANDARD SPECIFICATIONS.

IF CABLE-CONDUIT IS SPECIFIED, CUT CONDUIT AWAY FROM CABLES. CABLES SHALL BE CONTINUOUS AND UNSPLICED TO THE FIRST LIGHT POLE.

THE CABLE ENTRANCE AT THE BRACKET ARM SHALL BE A FIELD DRILLED 1-1/4" DIAMETER HOLE.

POST SHALL BE GROUNDED FROM GROUND LUG IN POST WITH #6 AWG BARE COPPER WIRE TO CONDUIT SYSTEM. GROUND LUG SHALL BE 90° OR 180° FROM THE HANDHOLE.

DESIGN OF STRUCTURAL SUPPORTS SHALL COMPLY WITH AASHTO STANDARD SPECIFICATIONS FOR STRUCTURAL SUPPORTS FOR HIGHWAY SIGNS, LUMINAIRES AND TRAFFIC SIGNALS 2001 AND INTERIMS THROUGH 2003.

SIGNS SHALL NOT BE MOUNTED ON LIGHTING POLES.

MISSOURI HIGHWAYS AND TRANSPORTATION COMMISSION
105 WEST CAPITOL
JEFFERSON CITY, MO 65102
1-888-ASK-MODOT (1-888-275-6636)

STATE OF MISSOURI
KATHRYN PHILLIPS HARVEY
NUMBER PE-23751
PROFESSIONAL ENGINEER
THIS SHEET HAS BEEN SIGNED, SEALED AND DATED ELECTRONICALLY.

# HIGHWAY LIGHTING

## POLES, FOUNDATIONS AND APPURTENANCES FOR 30' MOUNTING HEIGHT

| DATE EFFECTIVE: | 02/01/2011 | 901.00Z | SHEET NO. |
|---|---|---|---|
| DATE PREPARED: | 12/8/2010 | | 1 OF 4 |

IF A SEAL IS PRESENT ON THIS SHEET IT HAS BEEN ELECTRONICALLY SEALED AND DATED.

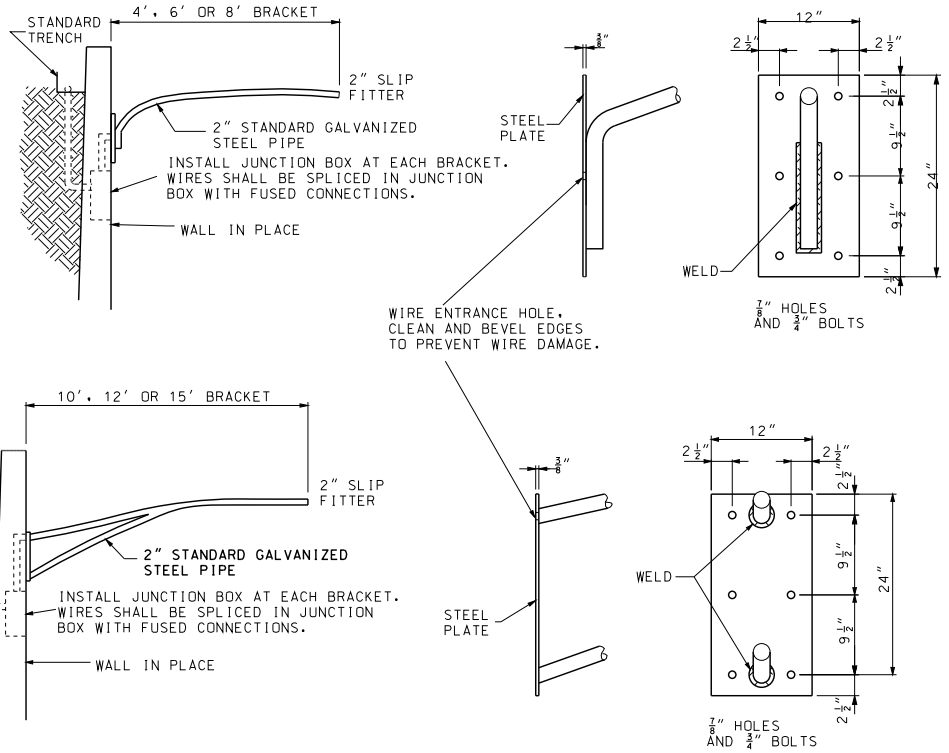


WALL BRACKETS

FACE PLATE DETAILS

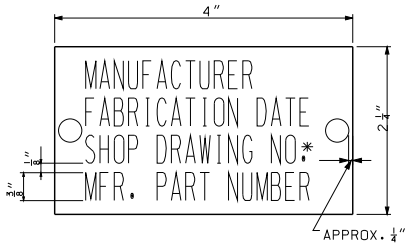


ID TAG NOTE:
TAG SHALL BE ALUMINUM OR STAINLESS STEEL AND ATTACHED TO POLE USING TWO RIVETS OR STAINLESS STEEL DRIVE SCREWS.

* INCLUDING REVISION

IDENTIFICATION TAG

GENERAL NOTES:

HOLES SHALL BE PUNCHED ONLY FOR SPECIFIED BOLT CIRCLE.

TYPE AT POLES SHALL BE EQUIPPED WITH THE GROUNDING LUG INSIDE THE TRANSFORMER BASE. TYPE B POLES SHALL BE EQUIPPED WITH A GROUNDING LUG INSIDE THE POLE.

TRANSFORMER BASES FOR 30 FOOT MOUNTING HEIGHT SHALL BE FURNISHED WITH ONE (1) DRILLED AND TAPPED HOLE AND GROUNDING LUG FOR GROUNDING EQUIPMENT.

TRANSFORMER BASE SHALL BE CERTIFIED AS MEETING THE BREAKAWAY CRITERIA AND STRUCTURAL REQUIREMENTS AS SET BY THE CURRENT AASHTO "STANDARD SPECIFICATIONS FOR STRUCTURAL STEEL SUPPORTS FOR HIGHWAY SIGNS, LUMINARIES, AND TRAFFIC SIGNALS" AND MEET THE BREAK-AWAY REQUIREMENTS OF NCHRP 350.

ALIGN HANDHOLE SO THAT THE POLE IS BETWEEN THE ONCOMING TRAFFIC AND THE HANDHOLE. HANDHOLE SHALL BE APPROX. 4" X 6-1/2". HANDHOLE FRAME SHALL BE REINFORCED SO THAT THE POLE STRENGTH IS NOT REDUCED.

ALL JUNCTION BOXES SHALL CONFORM TO SECTION 1062 OF THE STANDARD SPECIFICATIONS.

IF CABLE-CONDUIT IS SPECIFIED, CUT CONDUIT AWAY FROM CABLES. CABLES SHALL BE CONTINUOUS AND UNSPLICED TO THE FIRST LIGHT POLE.

THE CABLE ENTRANCE AT THE BRACKET ARM SHALL BE A FIELD DRILLED 1-1/4" DIA. HOLE.

POST SHALL BE GROUNDED FROM GROUND LUG IN POST WITH #6 AWG BARE COPPER WIRE TO CONDUIT SYSTEM. GROUND LUG SHALL BE 90° OR 180° FROM THE HANDHOLE.

ID TAG HOLES SHALL BE DRILLED INTO POLE PRIOR TO GALVANIZING.

| ANSI LAMPS | | | |
|---|---|---|---|
| FUSE RATING | DESIGNATION HPS | WATTS | INITIAL LUMENS |
| 3 A | S55 | 150 | 16,000 |
| TYPE III MEDIUM DISTRIBUTION SEMI-CUTOFF UNLESS OTHERWISE SPECIFIED ON PLANS | | | |

| TYPE AT POLE | | | | |
|---|---|---|---|---|
| BRACKET SPREAD | | 4'-10' | 12' | 15' |
| MAX. LUMINAIRE WEIGHT | | 75 LB | 71 LB | 66 LB |
| MAX. PROJECTED AREA | | 3.3 SQ. FT. | | |
| SINGLE AND TRUSSED BRACKET ARMS | | | | |
| LOCATION | LENGTH POLE | BRACKET SPREAD | TRANS. BASE BOLT CIRC. | D |
| SHOULDER | 28' | 4',6',8', 10',12',15' | 15" | 8" |

| TYPE B POLE | | | | |
|---|---|---|---|---|
| BRACKET SPREAD | | 4' | 6' | 8' |
| MAX. LUMINAIRE WEIGHT | | 75 LB | 75 LB | 54 LB |
| MAX. PROJECTED AREA | | 3.3 SQ. FT. | | |
| SINGLE BRACKET ARM | | | | |
| LOCATION | LENGTH POLE | BRACKET SPREAD | D | ANCHOR BOLT DIA. |
| BRIDGE SAFETY BARRIER CURB | 28' | 4',6' 8' | 8" | 1" |

MISSOURI HIGHWAYS AND TRANSPORTATION COMMISSION
105 WEST CAPITOL
JEFFERSON CITY, MO 65102
1-888-ASK-MODOT (1-888-275-6636)

STATE OF MISSOURI
KATHRYN PHILLIPS HARVEY
NUMBER PE-23751
PROFESSIONAL ENGINEER
THIS SHEET HAS BEEN SIGNED, SEALED AND DATED ELECTRONICALLY.

# HIGHWAY LIGHTING

## POLES, FOUNDATIONS AND APPURTENANCES FOR 30' MOUNTING HEIGHT

DATE EFFECTIVE: 02/01/2011
DATE PREPARED: 12/8/2010

901.00Z

SHEET NO. 2 OF 4

IF A SEAL IS PRESENT ON THIS SHEET IT HAS BEEN ELECTRONICALLY SEALED AND DATED.

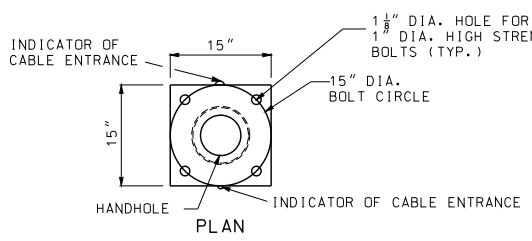


PLAN

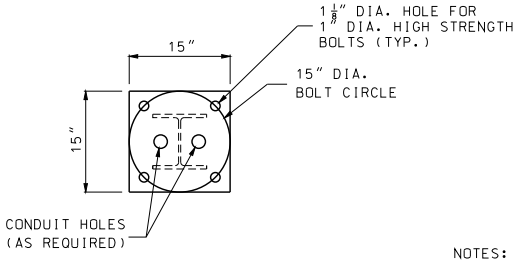


PLAN

NOTES:

(1) GRIND WELD AS NECESSARY TO CLEAR BOLT HEAD.

(2) FOUNDATIONS SHALL BE INSTALLED SO THAT CONNECTOR PLATES ARE LEVEL PERPENDICULAR TO THE BRACKET ARM AND SLOPED FOR POLE RAKING PARALLEL TO THE BRACKET ARM.

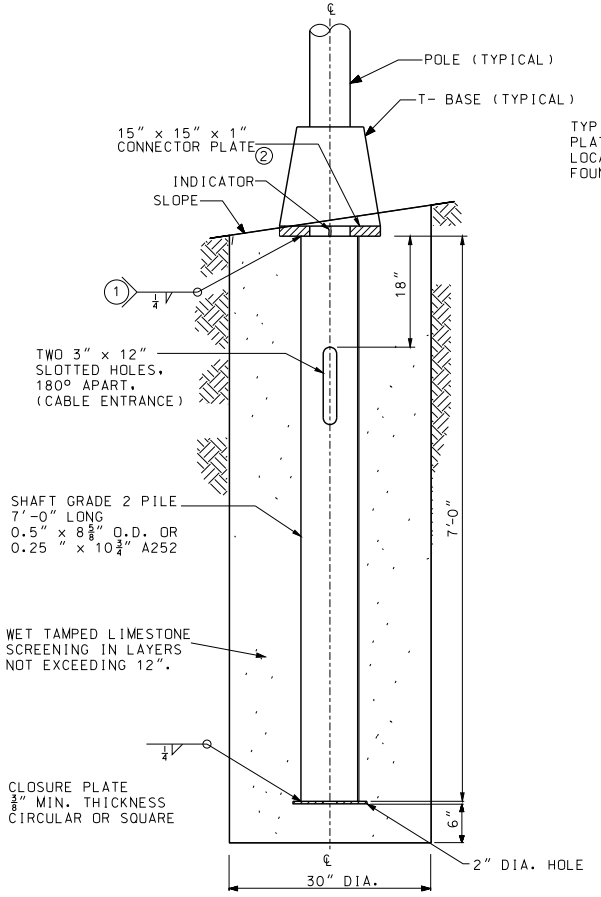


ELEVATION

## DETAILS OF CIRCULAR STEEL PILE FOUNDATION

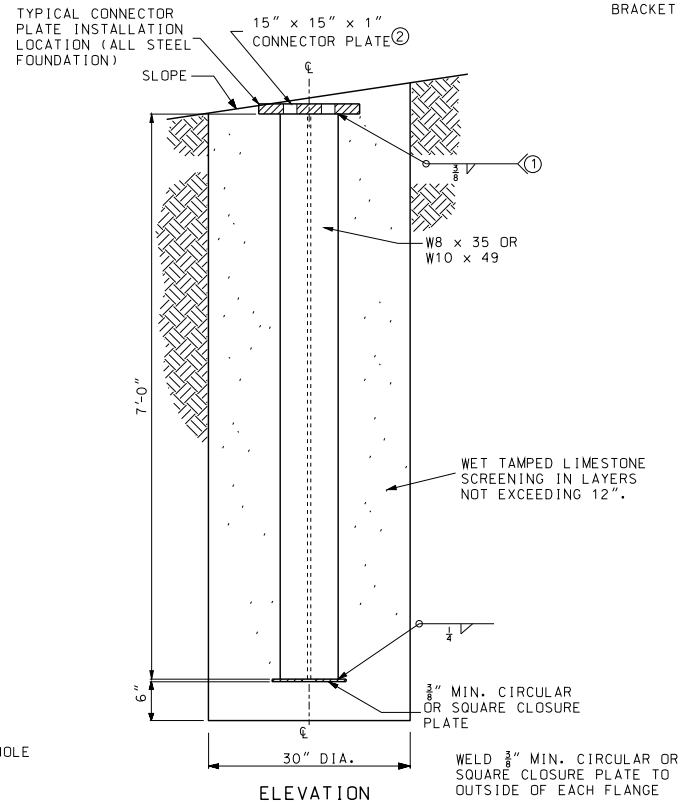


ELEVATION

## DETAILS OF STEEL "H" PILE FOUNDATION

GENERAL NOTES:

ALL CLASSIFICATIONS ARE ASTM UNLESS OTHERWISE NOTED. SEE STANDARD SPECIFICATIONS FOR CLASSIFICATIONS NOT SHOWN.

ALL CONNECTOR PLATE AND CLOSURE PLATE THICKNESSES SHOWN ARE MINIMUM DIMENSIONS.

ALL ANCHOR BOLTS SHALL BE FULLY GALVANIZED 1" DIA. HIGH STRENGTH ANCHOR BOLTS.

ALL STEEL COMPONENTS SHALL BE HOT DIP GALVANIZED.

MISSOURI HIGHWAYS AND TRANSPORTATION COMMISSION
105 WEST CAPITOL
JEFFERSON CITY, MO 65102
1-888-ASK-MODOT (1-888-275-6636)

STATE OF MISSOURI
KATHRYN PHILLIPS HARVEY
NUMBER PE-23751
PROFESSIONAL ENGINEER
THIS SHEET HAS BEEN SIGNED, SEALED AND DATED ELECTRONICALLY.

# HIGHWAY LIGHTING

POLES, FOUNDATIONS AND APPURTENANCES FOR 30' MOUNTING HEIGHT

| DATE EFFECTIVE: 02/01/2011 | 901.00Z | SHEET NO. 3 OF 4 |
|---|---|---|
| DATE PREPARED: 12/8/2010 | | |

IF A SEAL IS PRESENT ON THIS SHEET IT HAS BEEN ELECTRONICALLY SEALED AND DATED.

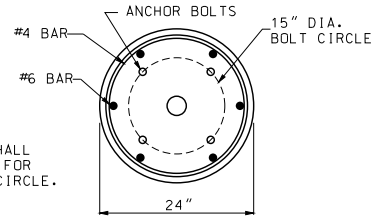


ANCHOR BOLTS SHALL BE PLACED ONLY FOR 15" DIA. BOLT CIRCLE.

PLAN

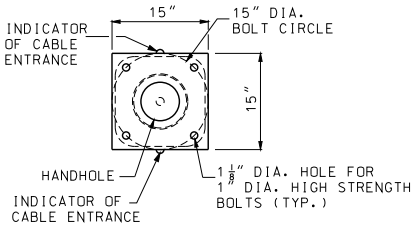


PLAN

DRIVE HOLES WILL BE PERMITTED PROVIDED THAT THEY DO NOT CONFLICT WITH OR COMPROMISE THE STRUCTURAL INTEGRITY OF THE PLATE, THE WELD BETWEEN THE PLATE AND SHAFT, OR THE BOLT HOLES.

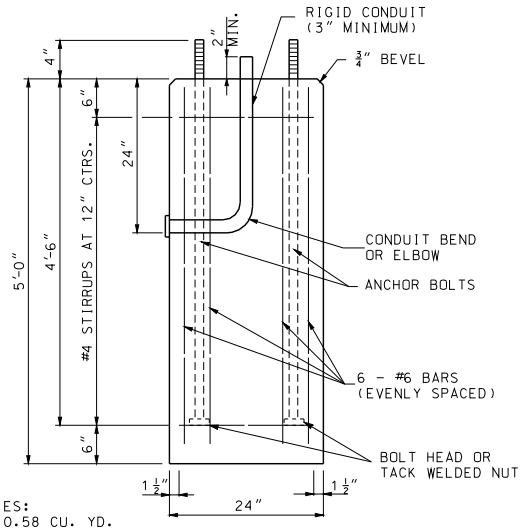


QUANTITIES:
CONC. = 0.58 CU. YD.
REIN. = 64 LBS.

ELEVATION

## DETAILS OF CONCRETE FOUNDATION ③

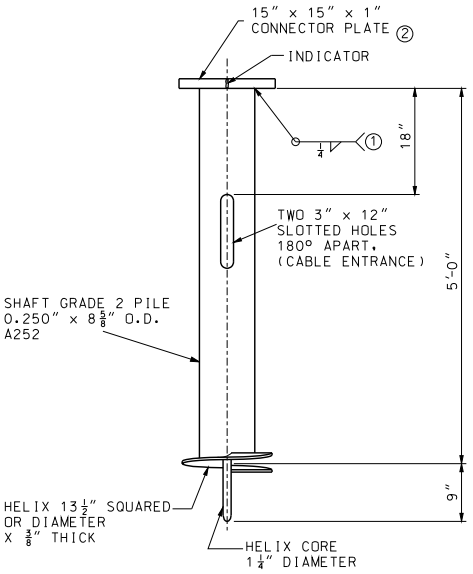


ELEVATION

## DETAILS OF SCREW ANCHOR FOUNDATION

NOTES:

1. GRIND WELD AS NECESSARY TO CLEAR BOLT HEAD.
2. FOUNDATIONS SHALL BE INSTALLED SO THAT CONNECTOR PLATES ARE LEVEL PERPENDICULAR TO THE BRACKET ARM AND SLOPED FOR POLE RAKING PARALLEL TO THE BRACKET ARM.
3. AT THE OPTION OF THE CONTRACTOR THE CONCRETE FOUNDATION MAY BE PRECAST. IF PRECAST, THEY SHALL BE SET IN DRILLED HOLES 3 FEET IN DIAMETER AND 6 INCHES DEEPER THAN THE BOTTOM OF THE CONCRETE FOUNDATION. THE BOTTOM 6 INCHES OF THE HOLE AND THE REMAINING SPACE AROUND THE FOUNDATION SHALL BE BACKFILLED WITH WET TAMPED LIMESTONE SCREENINGS IN LAYERS NOT EXCEEDING 12 INCHES.

GENERAL NOTES:

ALL CLASSIFICATIONS ARE ASTM UNLESS OTHERWISE NOTED. SEE STANDARD SPECIFICATIONS FOR CLASSIFICATIONS NOT SHOWN.

ALL CONNECTOR PLATE AND CLOSURE PLATE THICKNESSES SHOWN ARE MINIMUM DIMENSIONS.

ALL ANCHOR BOLTS SHALL BE FULLY GALVANIZED 1" DIA. HIGH STRENGTH ANCHOR BOLTS.

ALL STEEL COMPONENTS SHALL BE HOT DIP GALVANIZED.

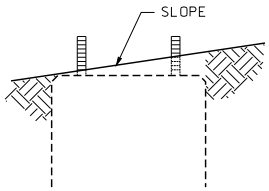


CONCRETE FOUNDATION EMBEDMENT

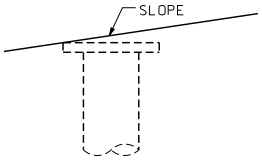


SCREW ANCHOR EMBEDMENT

MISSOURI HIGHWAYS AND TRANSPORTATION COMMISSION
105 WEST CAPITOL
JEFFERSON CITY, MO 65102
1-888-ASK-MODOT (1-888-275-6636)

STATE OF MISSOURI
KATHRYN PHILLIPS HARVEY
NUMBER PE-23751
PROFESSIONAL ENGINEER
THIS SHEET HAS BEEN SIGNED, SEALED AND DATED ELECTRONICALLY.

# HIGHWAY LIGHTING

POLES, FOUNDATIONS AND APPURTENANCES FOR 30' MOUNTING HEIGHT

| DATE EFFECTIVE: 02/01/2011 | 901.00Z | SHEET NO. 4 OF 4 |
|---|---|---|
| DATE PREPARED: 12/8/2010 | | |

IF A SEAL IS PRESENT ON THIS SHEET IT HAS BEEN ELECTRONICALLY SEALED AND DATED.

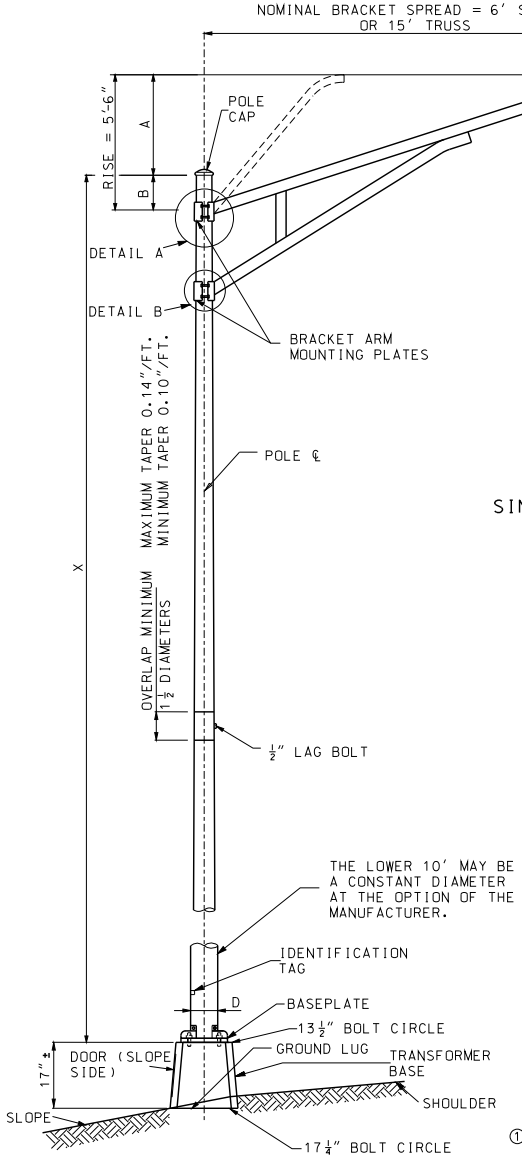


TYPE AT

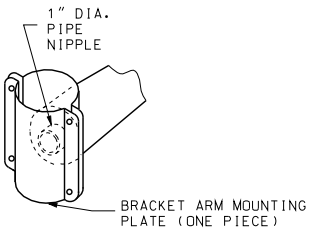


DETAIL A
SINGLE MOUNT AND UPPER MOUNT FOR TRUSSED

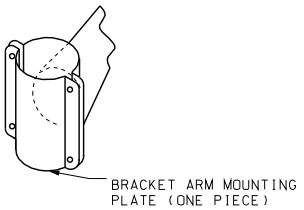


DETAIL B
LOWER MOUNT FOR TRUSSED

**TYPICAL BRACKET ARM MOUNTING**

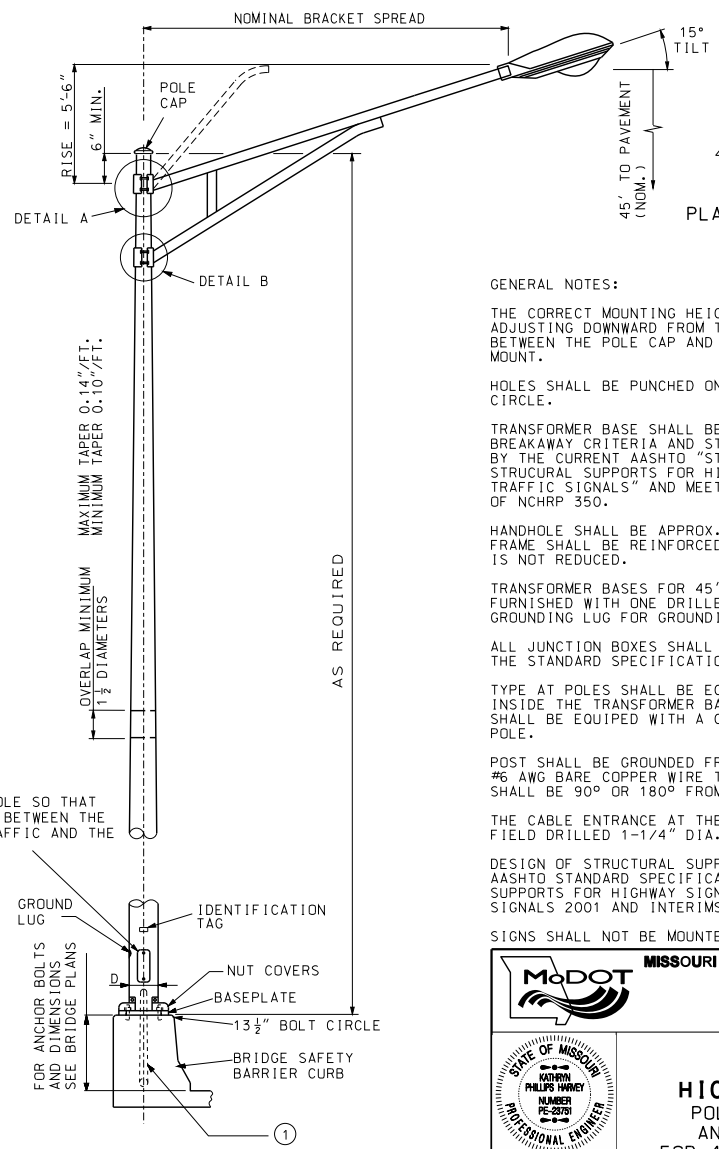


TYPE B

① RIGID CONDUIT SYSTEM. WIRES SHALL BE SPLICED AT FUSED CONNECTOR IN POLE BASE. IF CABLE-CONDUIT IS SPECIFIED, CUT CONDUIT AWAY FROM THE CABLES WHERE CABLE-CONDUIT ENTERS THE RIGID CONDUIT SYSTEM. (SEE DRAWING 901.02)

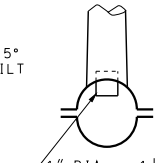


PLAN VIEW OF DETAIL A

GENERAL NOTES:

THE CORRECT MOUNTING HEIGHT WILL BE OBTAINED BY ADJUSTING DOWNWARD FROM THE 6" MINIMUM CLEARANCE BETWEEN THE POLE CAP AND THE TOP OF THE BRACKET ARM MOUNT.

HOLES SHALL BE PUNCHED ONLY FOR SPECIFIED BOLT CIRCLE.

TRANSFORMER BASE SHALL BE CERTIFIED AS MEETING THE BREAKAWAY CRITERIA AND STRUCTURAL REQUIREMENTS AS SET BY THE CURRENT AASHTO "STANDARD SPECIFICATIONS FOR STRUCURAL SUPPORTS FOR HIGHWAY SIGNS, LUMINARIES, AND TRAFFIC SIGNALS" AND MEET THE BREAKAWAY REQUIREMENTS OF NCHRP 350.

HANDHOLE SHALL BE APPROX. 4" X 6-1/2". HANDHOLE FRAME SHALL BE REINFORCED SO THAT THE POLE STRENGTH IS NOT REDUCED.

TRANSFORMER BASES FOR 45' MOUNTING HEIGHT SHALL BE FURNISHED WITH ONE DRILLED AND TAPPED HOLE AND GROUNDING LUG FOR GROUNDING EQUIPMENT.

ALL JUNCTION BOXES SHALL CONFORM TO SECTION 1062 OF THE STANDARD SPECIFICATIONS.

TYPE AT POLES SHALL BE EQUIPED WITH THE GROUNDING LUG INSIDE THE TRANSFORMER BASE. TYPE B AND MB POLES SHALL BE EQUIPED WITH A GROUNDING LUG INSIDE THE POLE.

POST SHALL BE GROUNDED FROM GROUND LUG IN POST WITH #6 AWG BARE COPPER WIRE TO CONDUIT SYSTEM. GROUND LUG SHALL BE 90° OR 180° FROM HANDHOLE.

THE CABLE ENTRANCE AT THE BRACKET ARM SHALL BE A FIELD DRILLED 1-1/4" DIA. HOLE.

DESIGN OF STRUCTURAL SUPPORTS SHALL COMPLY WITH AASHTO STANDARD SPECIFICATIONS FOR STRUCTURAL SUPPORTS FOR HIGHWAY SIGNS, LUMINAIRES AND TRAFFIC SIGNALS 2001 AND INTERIMS THROUGH 2003.

SIGNS SHALL NOT BE MOUNTED ON LIGHTING POLES.

MISSOURI HIGHWAYS AND TRANSPORTATION COMMISSION
105 WEST CAPITOL
JEFFERSON CITY, MO 65102
1-888-ASK-MODOT (1-888-275-6636)

STATE OF MISSOURI
KATHRYN PHILLIPS HARVEY
NUMBER PE-23751
PROFESSIONAL ENGINEER
THIS SHEET HAS BEEN SIGNED, SEALED AND DATED ELECTRONICALLY.

# HIGHWAY LIGHTING
## POLES, FOUNDATIONS AND APPURTENANCES FOR 45' MOUNTING HEIGHT

| DATE EFFECTIVE: | 02/01/2011 | 901.01AG | SHEET NO. |
|---|---|---|---|
| DATE PREPARED: | 12/8/2010 | | 1 OF 6 |

IF A SEAL IS PRESENT ON THIS SHEET IT HAS BEEN ELECTRONICALLY SEALED AND DATED.

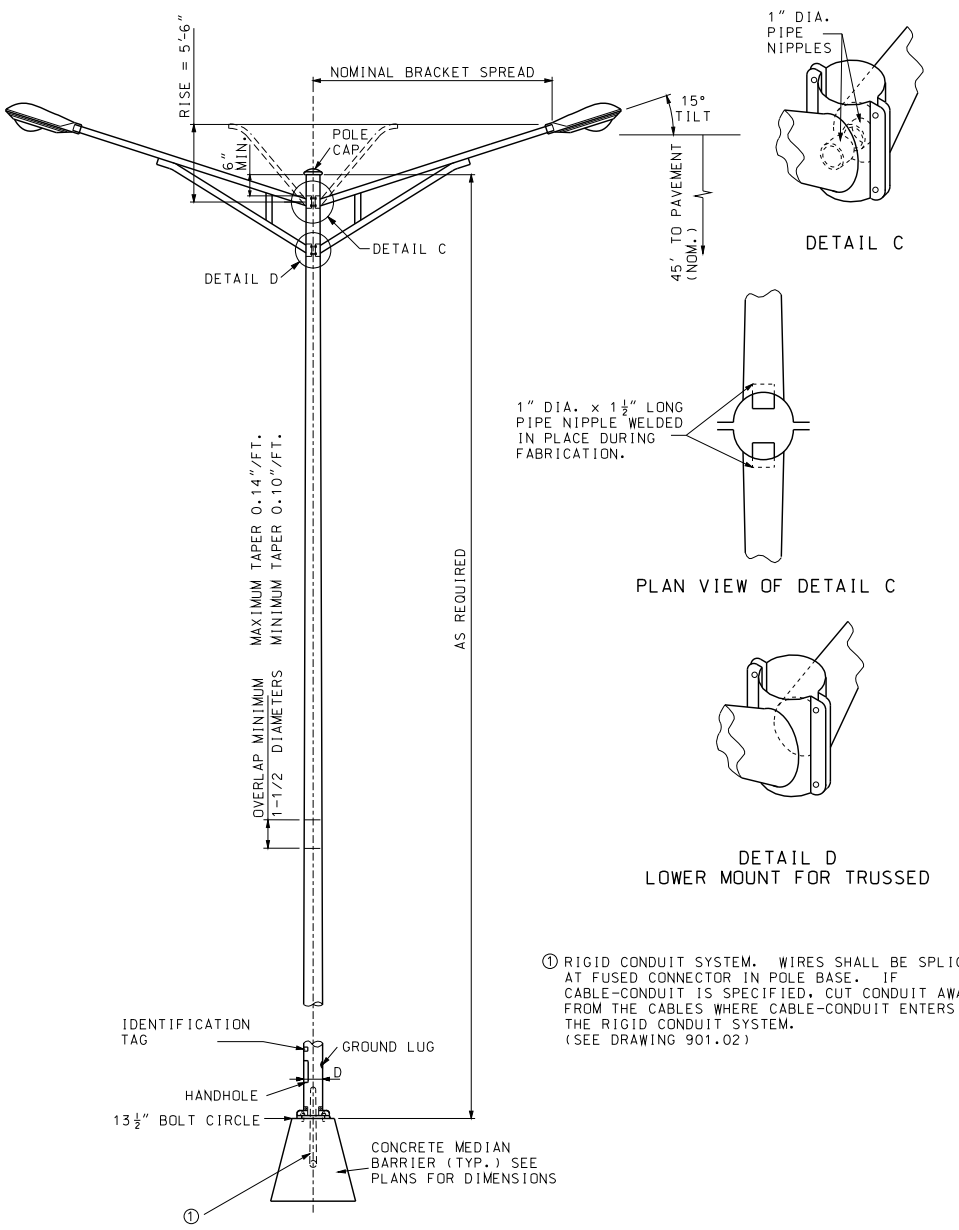


TYPE MB




DETAIL C




PLAN VIEW OF DETAIL C



DETAIL D
LOWER MOUNT FOR TRUSSED

① RIGID CONDUIT SYSTEM. WIRES SHALL BE SPLICED AT FUSED CONNECTOR IN POLE BASE. IF CABLE-CONDUIT IS SPECIFIED, CUT CONDUIT AWAY FROM THE CABLES WHERE CABLE-CONDUIT ENTERS THE RIGID CONDUIT SYSTEM. (SEE DRAWING 901.02)

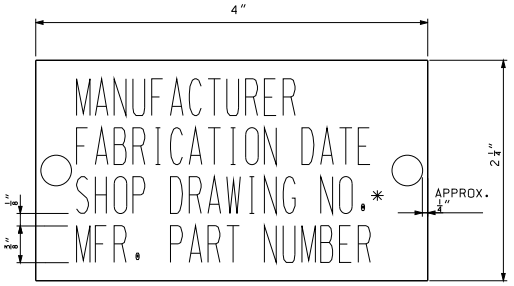


IDENTIFICATION TAG

ID TAG NOTE:

TAG SHALL BE ALUMINUM OR STAINLESS STEEL AND ATTACHED TO POLE USING TWO RIVETS OR STAINLESS STEEL DRIVE SCREWS. ID TAG HOLES SHALL BE DRILLED PRIOR TO GALVANIZING.

* INCLUDING REVISION

GENERAL NOTES:

THE CORRECT MOUNTING HEIGHT WILL BE OBTAINED BY ADJUSTING DOWNWARD FROM THE 6" MINIMUM CLEARANCE BETWEEN THE POLE CAP AND THE TOP OF THE BRACKET ARM MOUNT.

HOLES SHALL BE PUNCHED ONLY FOR SPECIFIED BOLT CIRCLE.

TRANSFORMER BASE SHALL BE CERTIFIED AS MEETING THE BREAKAWAY CRITERIA AND STRUCTURAL REQUIREMENTS AS SET BY THE CURRENT AASHTO "STANDARD SPECIFICATIONS FOR STRUCURAL SUPPORTS FOR HIGHWAY SIGNS, LUMINARIES, AND TRAFFIC SIGNALS" AND MEET THE BREAKAWAY REQUIREMENTS OF NCHRP 350.

HANDHOLE SHALL BE APPROX. 4" X 6-1/2". HANDHOLE FRAME SHALL BE REINFORCED SO THAT THE POLE STRENGTH IS NOT REDUCED.

TRANSFORMER BASES FOR 45' MOUNTING HEIGHT SHALL BE FURNISHED WITH ONE DRILLED AND TAPPED HOLE AND GROUNDING LUG FOR GROUNDING EQUIPMENT.

ALL JUNCTION BOXES SHALL CONFORM TO SECTION 1062 OF THE STANDARD SPECIFICATIONS.

TYPE AT POLES SHALL BE EQUIPED WITH THE GROUNDING LUG INSIDE THE TRANSFORMER BASE. TYPE B AND MB POLES SHALL BE EQUIPED WITH A GROUNDING LUG INSIDE THE POLE.

POST SHALL BE GROUNDED FROM GROUND LUG IN POST WITH #6 AWG BARE COPPER WIRE TO CONDUIT SYSTEM. GROUND LUG SHALL BE 90° OR 180° FROM HANDHOLE.

THE CABLE ENTRANCE AT THE BRACKET ARM SHALL BE A FIELD DRILLED 1-1/4" DIA. HOLE.

SIGNS SHALL NOT BE MOUNTED ON LIGHTING POLES.

IF A SEAL IS PRESENT ON THIS SHEET IT HAS BEEN ELECTRONICALLY SEALED AND DATED.

MISSOURI HIGHWAYS AND TRANSPORTATION COMMISSION
105 WEST CAPITOL
JEFFERSON CITY, MO 65102
1-888-ASK-MODOT (1-888-275-6636)

STATE OF MISSOURI
KATHRYN PHILLIPS HARVEY
NUMBER PE-23751
PROFESSIONAL ENGINEER
THIS SHEET HAS BEEN SIGNED, SEALED AND DATED ELECTRONICALLY.

# HIGHWAY LIGHTING
## POLES, FOUNDATIONS AND APPURTENANCES FOR 45' MOUNTING HEIGHT

DATE EFFECTIVE: 02/01/2011
DATE PREPARED: 12/8/2010

901.01AG

SHEET NO. 2 OF 6

| TYPE AT POLE | | | | |
|---|---|---|---|---|
| BRACKET SPREAD | | | | 6′ OR 15′ |
| MAX. LUMINAIRE WEIGHT | | | | 60 LB |
| MAX. PROJECTED AREA | | | | 3.3 SQ. FT. |
| AT-45 DESIGN NO. | X | A | B | D * (NOMINAL) |
| 1 | 50′ | VAR. | 6″ MIN. | 10″ |
| 2 | 45′ | VAR. | 6″ MIN. | 10″ |
| 3 | 40′ | VAR. | 6″ MIN. | 10″ |
| 4 | 35′ | VAR. | 6″ MIN. | 10″ |
| 5 | 30′ | VAR. | 6″ MIN. | 10″ |

* THE MINIMUM ALTERNATE DIAMETER SHALL BE 10″ FOR A 50′ POLE, 9-1/2″ FOR A 45′ POLE, 9″ FOR A 40′ POLE, 8-1/2″ FOR A 35′ POLE AND 8″ FOR A 30′ POLE.

| ANSI LAMPS | | | |
|---|---|---|---|
| FUSE RATING | DESIGNATION HPS | WATTS | INITIAL LUMENS |
| 3A | S55 | 150 | 16,000 |
| 5A | S50 | 250 | 27,500 |
| 7A | S51 | 400 | 50,000 |
| TYPE III MEDIUM DISTRIBUTION SEMI-CUTOFF UNLESS OTHERWISE SPECIFIED ON PLANS | | | |

| TYPE B POLE | | | |
|---|---|---|---|
| BRACKET SPREAD | | | 6′ OR 15′ |
| MAX. LUMINAIRE WEIGHT | | | 60 LB |
| MAX. PROJECTED AREA | | | 3.3 SQ. FT. |
| SINGLE BRACKET ARM | | | |
| LOCATION | BRACKET SPREAD | D NOM. | ANCHOR BOLT DIA. |
| BRIDGE SAFETY BARRIER CURB | 6′ | 10″ | 1-1/4″ |
| TRUSSED BRACKET ARM | | | |
| LOCATION | BRACKET SPREAD | D NOM. | ANCHOR BOLT DIA. |
| BRIDGE SAFETY BARRIER CURB | 15′ | 10″ | 1-1/4″ |

| TYPE MB POLE | | |
|---|---|---|
| BRACKET SPREAD | | 6′ OR 15′ |
| MAX. LUMINAIRE WEIGHT | | 60 LB |
| MAX. PROJECTED AREA | | 3.3 SQ. FT. |
| DOUBLE BRACKET ARM | | |
| LOCATION | BRACKET SPREAD | D NOM. |
| MEDIAN BARRIER CURB | 6′ | 10″ |
| DOUBLE TRUSSED BRACKET ARM | | |
| LOCATION | BRACKET SPREAD | D NOM. |
| MEDIAN BARRIER CURB | 15′ | 10″ |

GENERAL NOTES:

THE CORRECT MOUNTING HEIGHT WILL BE OBTAINED BY ADJUSTING DOWNWARD FROM THE 6″ MINIMUM CLEARANCE BETWEEN THE POLE CAP AND THE TOP OF THE BRACKET ARM MOUNT.

HOLES SHALL BE PUNCHED ONLY FOR SPECIFIED BOLT CIRCLE.

TRANSFORMER BASE SHALL BE CERTIFIED AS MEETING THE BREAKAWAY CRITERIA AND STRUCTURAL REQUIREMENTS AS SET BY THE CURRENT AASHTO "STANDARD SPECIFICATIONS FOR STRUCURAL SUPPORTS FOR HIGHWAY SIGNS, LUMINARIES, AND TRAFFIC SIGNALS" AND MEET THE BREAKAWAY REQUIREMENTS OF NCHRP 350.

HANDHOLE SHALL BE APPROX. 4″ X 6½″. HANDHOLE FRAME SHALL BE REINFORCED SO THAT THE POLE STRENGTH IS NOT REDUCED.

TRANSFORMER BASES FOR 45′ MOUNTING HEIGHT SHALL BE FURNISHED WITH ONE DRILLED AND TAPPED HOLE AND GROUNDING LUG FOR GROUNDING EQUIPMENT.

ALL JUNCTION BOXES SHALL CONFORM TO SECTION 1062 OF THE STANDARD SPECIFICATIONS.

TYPE AT POLES SHALL BE EQUIPED WITH THE GROUNDING LUG INSIDE THE TRANSFORMER BASE. TYPE B AND MB POLES SHALL BE EQUIPED WITH A GROUNDING LUG INSIDE THE POLE.

POST SHALL BE GROUNDED FROM GROUND LUG IN POST WITH #6 AWG BARE COPPER WIRE TO CONDUIT SYSTEM. GROUND LUG SHALL BE 90° OR 180° FROM HANDHOLE.

THE CABLE ENTRANCE AT THE BRACKET ARM SHALL BE A FIELD DRILLED 1¼″ DIA. HOLE.

IF A SEAL IS PRESENT ON THIS SHEET IT HAS BEEN ELECTRONICALLY SEALED AND DATED.

MISSOURI HIGHWAYS AND TRANSPORTATION COMMISSION
105 WEST CAPITOL
JEFFERSON CITY, MO 65102
1-888-ASK-MODOT (1-888-275-6636)

STATE OF MISSOURI
KATHRYN PHILLIPS HARVEY
NUMBER PE-23751
PROFESSIONAL ENGINEER
THIS SHEET HAS BEEN SIGNED, SEALED AND DATED ELECTRONICALLY.

# HIGHWAY LIGHTING
## POLES, FOUNDATIONS AND APPURTENANCES FOR 45′ MOUNTING HEIGHT

DATE EFFECTIVE: 02/01/2011
DATE PREPARED: 12/8/2010

901.01AG

SHEET NO. 3 OF 6

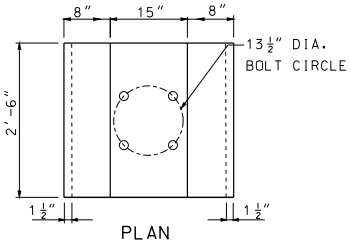


PLAN

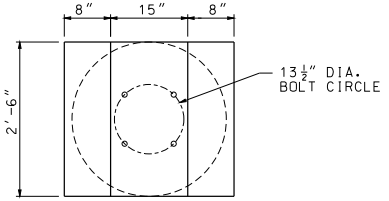


PLAN

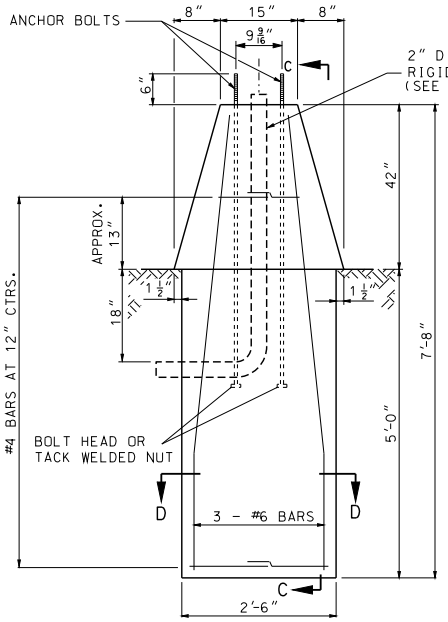


ELEVATION
ALTERNATE 1

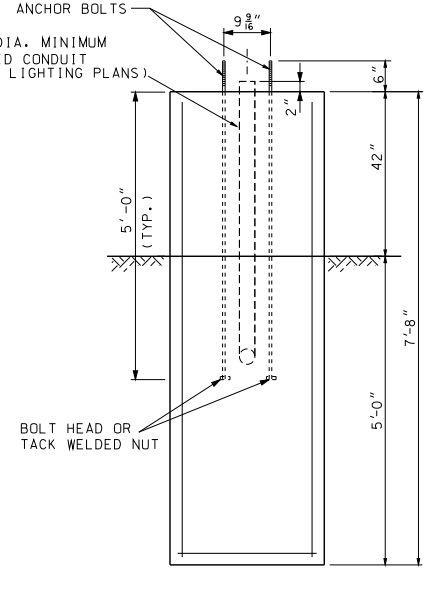


SECTION C-C

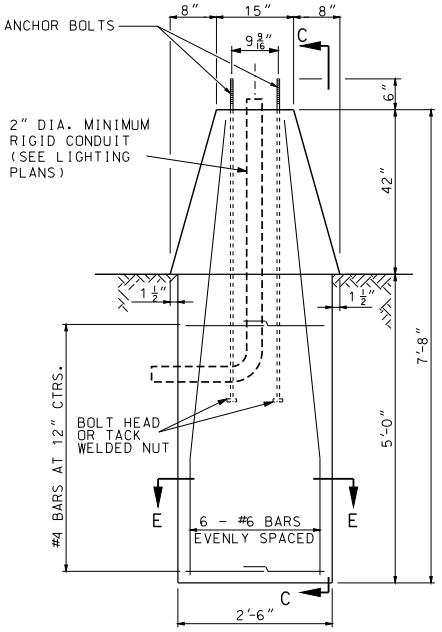


ELEVATION
ALTERNATE 2

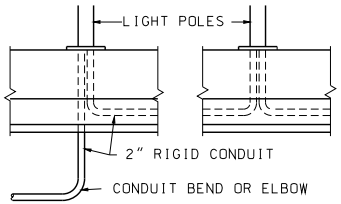


CONDUIT DETAIL FOR
ALTERNATE 1 & 2

GENERAL NOTES:

ALL FOUNDATIONS SHALL INCLUDE 4 ANCHOR BOLTS AND NUTS PLACED AS SHOWN.

ALL ANCHOR BOLTS SHALL BE FULLY GALVANIZED 1¼" DIAMETER HIGH STRENGTH ANCHOR BOLTS.

TOUNGE AND GROOVE REQUIRED ON MEDIAN BARRIER SECTION FOR TYPEMB POLES WHEN ADJACENT MEDIAN BARRIER IS PRECAST. FOR DETAILS, SEE STANDARD PLANS.

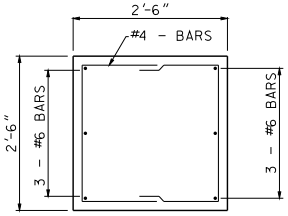


SECTION D-D

# CONCRETE MEDIAN BARRIER AND FOUNDATION DESIGN FOR TYPE MB LIGHT POLE

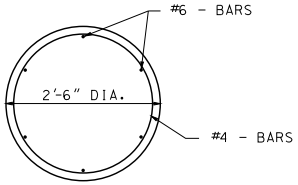


SECTION E-E

MISSOURI HIGHWAYS AND TRANSPORTATION COMMISSION
105 WEST CAPITOL
JEFFERSON CITY, MO 65102
1-888-ASK-MODOT (1-888-275-6636)

STATE OF MISSOURI
KATHRYN PHILLIPS HARVEY
NUMBER PE-23751
PROFESSIONAL ENGINEER
THIS SHEET HAS BEEN SIGNED, SEALED AND DATED ELECTRONICALLY.

## HIGHWAY LIGHTING
POLES, FOUNDATIONS
AND APPURTENANCES
FOR 45' MOUNTING HEIGHT

| DATE EFFECTIVE: | 02/01/2011 | 901.01AG | SHEET NO. 4 OF 6 |
|---|---|---|---|
| DATE PREPARED: | 12/8/2010 | | |

IF A SEAL IS PRESENT ON THIS SHEET IT HAS BEEN ELECTRONICALLY SEALED AND DATED.

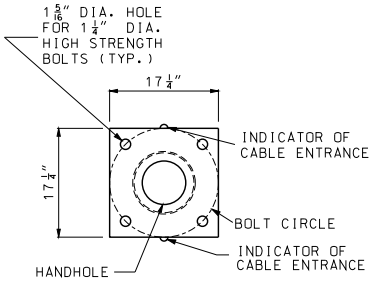


PLAN

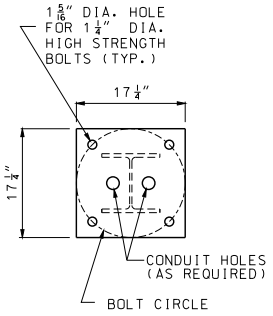


PLAN

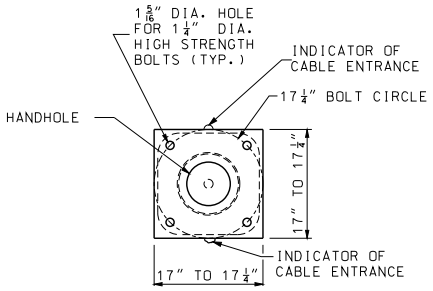


PLAN

NOTE:
DRIVE HOLES WILL BE PERMITTED PROVIDED THEY DO NOT CONFLICT WITH OR COMPROMISE THE STRUCTURAL INTEGRITY OF THE PLATE, THE WELD BETWEEN THE PLATE AND SHAFT, OR THE BOLT HOLES.

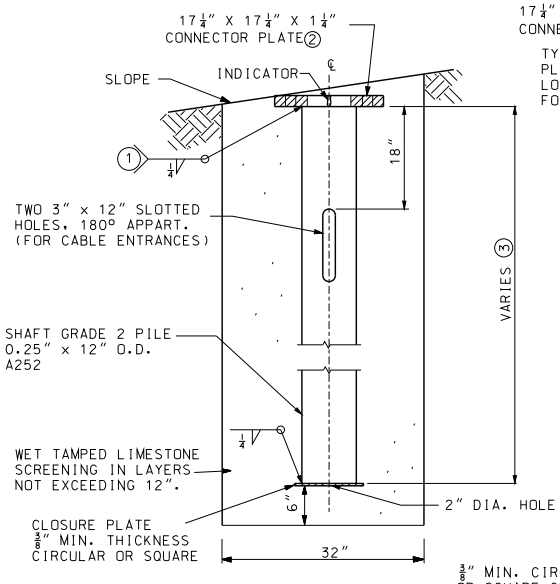


ELEVATION

## DETAILS OF CIRCULAR STEEL PILE FOUNDATION

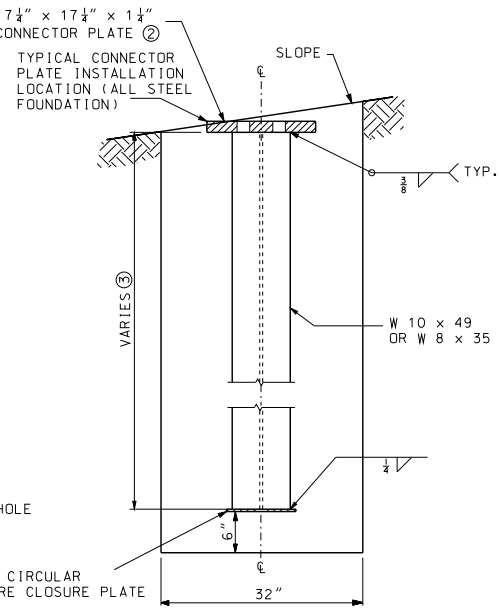


ELEVATION

## DETAILS OF STEEL "H" PILE FOUNDATION

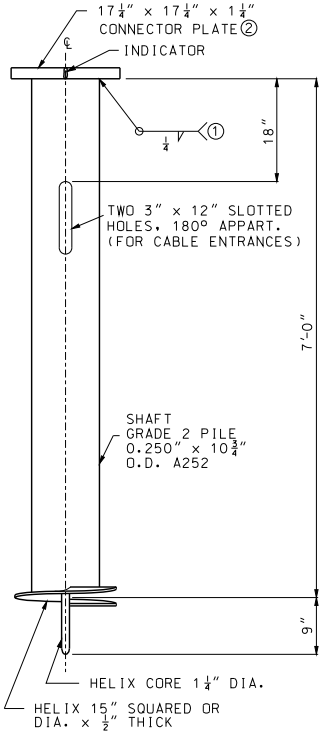


ELEVATION

## DETAILS OF SCREW ANCHOR FOUNDATION

(1) GRIND WELD AS NECESSARY TO CLEAR BOLT HEAD.

(2) FOUNDATIONS SHALL BE INSTALLED SO THAT CONNECTOR PLATES ARE LEVEL PERPENDICULAR TO THE BRACKET ARM AND SLOPED FOR POLE RAKING PARALLEL TO THE BRACKET ARM.

(3) PILE LENGTHS FOR STEEL PILE FOUNDATIONS:

| AT-45 DESIGN NO. | PILE LENGTH |
|---|---|
| 4 & 5 | 8'-0" |
| 2 & 3 | 9'-0" |
| 1 | 10'-0" |

GENERAL NOTES:

ALL CLASSIFICATIONS ARE ASTM UNLESS OTHERWISE NOTED. SEE STANDARD SPECIFICATIONS FOR CLASSIFICATIONS NOT SHOWN.

ALL BOLT CIRCLES FOR 45' MOUNTING HEIGHT SHALL BE 17 1/4".

ALL CONECTOR PLATE AND CLOSURE PLATE THICKNESSES SHOWN ARE MINIMUM DIMENSIONS.

ALL ANCHOR BOLTS SHALL BE FULLY GALVANIZED 1 1/4" DIAMETER HIGH STRENGTH ANCHOR BOLTS.

ALL STEEL COMPONENTS SHALL BE HOT DIP GALVANIZED.

MISSOURI HIGHWAYS AND TRANSPORTATION COMMISSION
105 WEST CAPITOL
JEFFERSON CITY, MO 65102
1-888-ASK-MODOT (1-888-275-6636)

STATE OF MISSOURI KATHRYN PHILLIPS HARVEY NUMBER PE-23751 PROFESSIONAL ENGINEER
THIS SHEET HAS BEEN SIGNED, SEALED AND DATED ELECTRONICALLY.

# HIGHWAY LIGHTING

POLES, FOUNDATIONS AND APPURTENANCES FOR 45' MOUNTING HEIGHT

| DATE EFFECTIVE: | 02/01/2011 | 901.01AG | SHEET NO. 5 OF 6 |
|---|---|---|---|
| DATE PREPARED: | 12/8/2010 | | |

IF A SEAL IS PRESENT ON THIS SHEET IT HAS BEEN ELECTRONICALLY SEALED AND DATED.

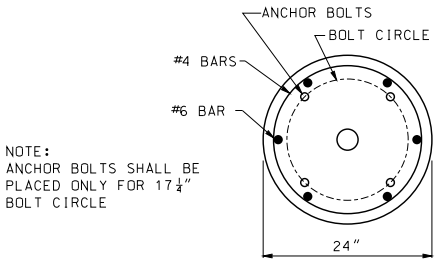


NOTE:
ANCHOR BOLTS SHALL BE PLACED ONLY FOR 17¼" BOLT CIRCLE

PLAN

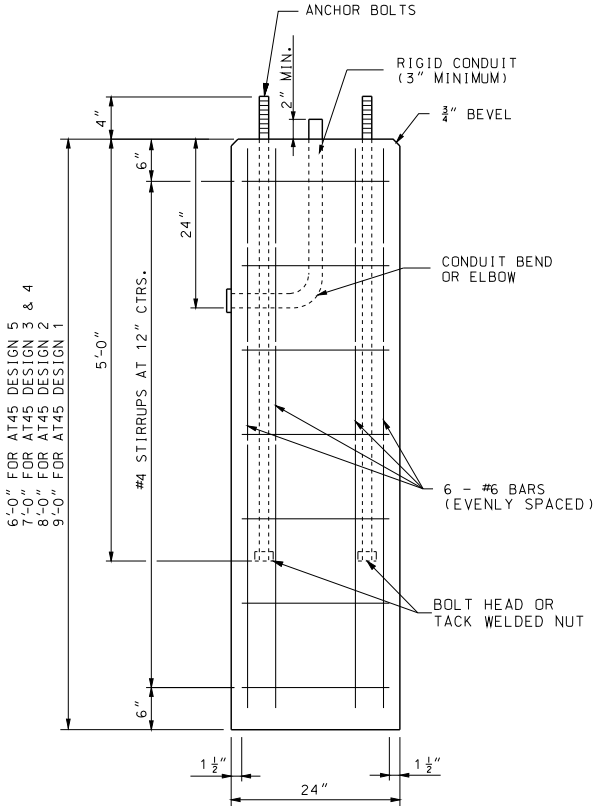


ELEVATION

## DETAILS OF CONCRETE FOUNDATION ④

④ AT THE OPTION OF THE CONTRACTOR THE CONCRETE FOUNDATIONS MAY BE PRECAST. IF PRECAST, THEY SHALL BE SET IN DRILLED HOLES 3 FEET IN DIAMETER AND 6 INCHES DEEPER THAN THE BOTTOM OF THE CONCRETE FOUNDATION. THE BOTTOM 6 INCHES OF THE HOLE AND THE REMAINING SPACE AROUND THE FOUNDATION SHALL BE BACKFILLED WITH WET TAMPED LIMESTONE SCREENINGS IN LAYERS NOT EXCEEDING 12 INCHES.

| QUANTITIES | | |
|---|---|---|
| | CONC. | REINF. |
| HEIGHT | CU. YD. | LBS. |
| 6'-0" | .70 | 80 |
| 7'-0" | .81 | 90 |
| 8'-0" | .93 | 104 |
| 9'-0" | 1.05 | 120 |

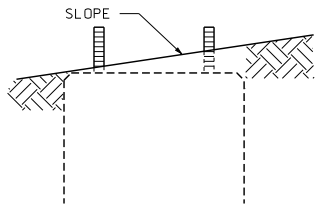


CONCRETE FOUNDATION EMBEDMENT

GENERAL NOTES:

ALL CLASSIFICATIONS ARE ASTM UNLESS OTHERWISE NOTED. SEE STANDARD SPECIFICATIONS FOR CLASSIFICATIONS NOT SHOWN.

ALL BOLT CIRCLES FOR 45' MOUNTING HEIGHT SHALL BE 17¼".

ALL CONECTOR PLATE AND CLOSURE PLATE THICKNESSES SHOWN ARE MINIMUM DIMENSIONS.

ALL ANCHOR BOLTS SHALL BE FULLY GALVANIZED 1¼" DIAMETER HIGH STRENGTH ANCHOR BOLTS.

ALL STEEL COMPONENTS SHALL BE HOT DIP GALVANIZED.

MISSOURI HIGHWAYS AND TRANSPORTATION COMMISSION
105 WEST CAPITOL
JEFFERSON CITY, MO 65102
1-888-ASK-MODOT (1-888-275-6636)

STATE OF MISSOURI
KATHRYN PHILLIPS HARVEY
NUMBER PE-23751
PROFESSIONAL ENGINEER
THIS SHEET HAS BEEN SIGNED, SEALED AND DATED ELECTRONICALLY.

# HIGHWAY LIGHTING
POLES, FOUNDATIONS AND APPURTENANCES FOR 45' MOUNTING HEIGHT

DATE EFFECTIVE: 02/01/2011
DATE PREPARED: 12/8/2010

901.01AG

SHEET NO. 6 OF 6

IF A SEAL IS PRESENT ON THIS SHEET IT HAS BEEN ELECTRONICALLY SEALED AND DATED.

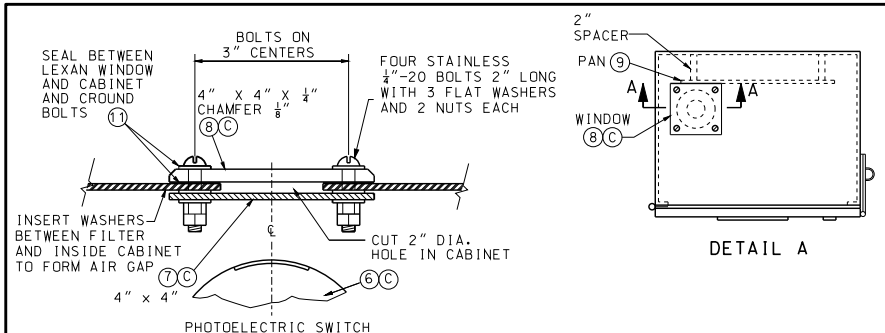


SECTION A-A
WINDOW DETAIL




DETAIL A

| LIST OF MATERIALS | |
|---|---|
| ITEM | DESCRIPTION |
| 1 | #2 CORBIN LOCK |
| 2 | RIGID CONDUIT * |
| 3 | CLASS B CONCRETE, 0.4 C.Y.± |
| 4 | NEMA 4, DUST-TIGHT, WATERTIGHT, CABINET |
| 5 | GROUND ROD, 3/4" DIA. X 8' MIN. |
| 6 | PHOTOELECTRIC SWITCH AND SOCKET, 105/285 V., 1000-WATT |
| 7 | TRANSLUCENT, PLEXIGLASS FILTER #W2067, 1/8" THICK |
| 8 | CLEAR, LEXAN #9034 WINDOW, 1/4" THICK MIN. |
| 9 | MOUNTING PAN, 31 1/2" x 12" x 1/4" ALUMINUM OR STAINLESS STEEL |
| 10 | PLIABLE DUCT SEALANT |
| 11 | LIFETIME SILICONE CAULK |
| 12 | ANCHOR BOLTS, 5/8-11 x 14" LONG BOLTS, HOT DIP GALVANIZED, 4 REQUIRED, USE BOLT HEAD OR TACK WELDED NUT ON EMBEDDED END |
| 13 | WEATHERPROOF ADHESIVE LABEL, VINYL RAISED LETTERING (OR EQUIVALENT, SEE DETAIL) |
| | * - SEE PLANS |

NOTES

(A) IF CABLE-CONDUIT IS SPECIFIED, THE CONDUIT SHALL BE CUT AWAY FROM CABINET BETWEEN PULL BOX AND CONTROL STATION.

(B) LIGHTING SYSTEM VOLTAGE AS SPECIFIED ON PLANS.

(C) PHOTOELECTRIC SWITCH BRACKETS MAY VARY. LOCATE CENTER OF WIDOW OVER CENTER OF PHOTOELECTRIC SWITCH.

(D) IF SUBSURFACE CONDITIONS EXIST WHICH PROHIBIT THE PLACEMENT OF THE GROUND ROD IN A VERTICAL POSITION, THE ROD MAY BE DRIVEN AT AN OBLIQUE ANGLE NOT TO EXCEED 45 DEGREES FROM VERTICAL OR BURIED IN A TRENCH AT LEAST 30 IN. DEEP. CONNECTION TO GROUND ROD SHALL BE CADWELDED.

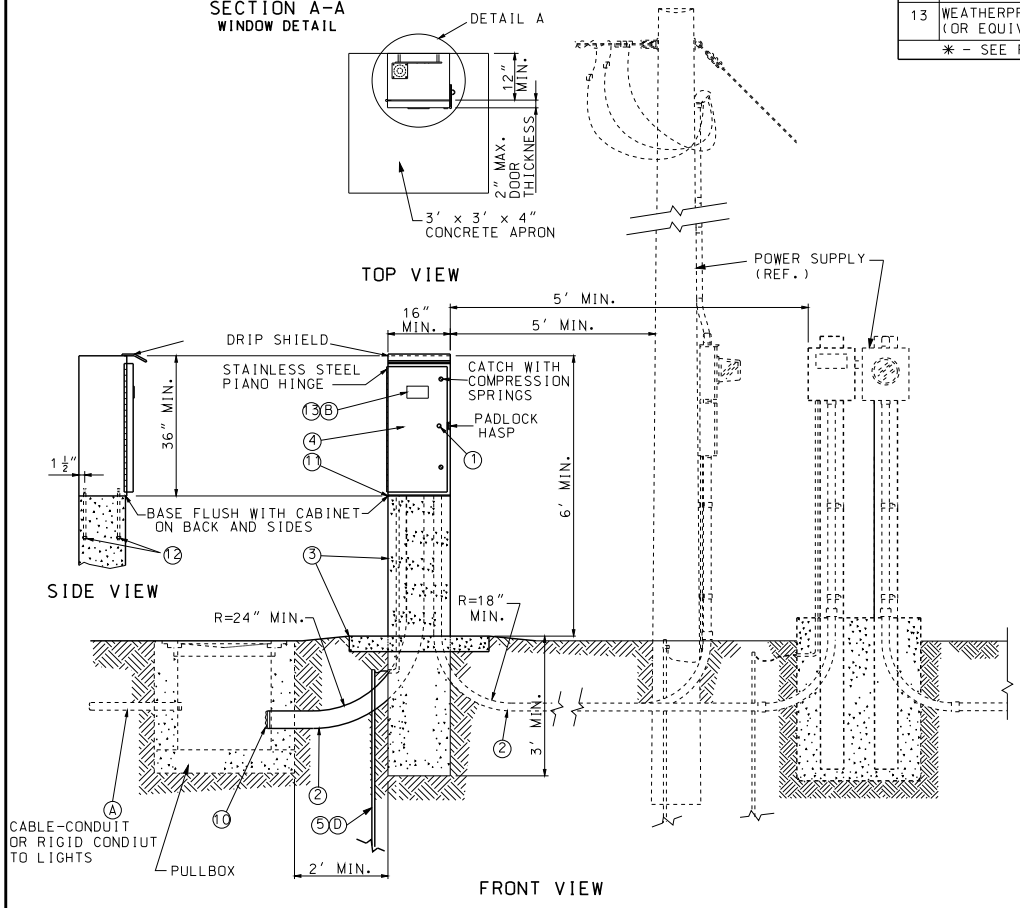


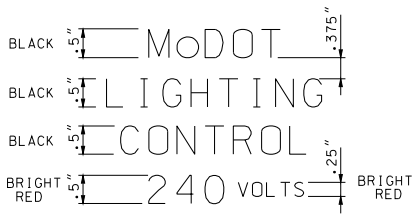


LABEL DETAIL
(240 VOLT) (13)(B)

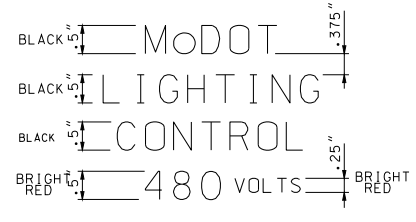


LABEL DETAIL
(480 VOLT) (13)(B)

GENERAL NOTES:

ALTERNATE CABINET DIMENSIONS WILL BE ALLOWED AS APPROVED BY THE ENGINEER. INTERIOR CABINET VOLUME SHALL BE EQUAL TO OR GREATER THAN THAT SHOWN ON PLANS AND PROPER CLEARANCES SHALL BE PROVIDED FOR ALL EQUIPMENT. CONCRETE BASE DIMENSIONS SHALL BE MODIFIED TO FIT THE CABINET SUPPLIER.

PLACEMENT OF ALL ITEMS SHALL BE APPROVED BY THE ENGINEER.

CABINET SHALL BE LOCATED AWAY FROM TRAFFIC. TOP MOUNT PHOTO CONTROL SHALL FACE AN OPEN SKY. SIDE MOUNT PHOTO CONTROL SHALL FACE NORTH.

SEE PLANS FOR CIRCUIT WIRING; MAXIMUM LOADING PER CIRCUIT IS 7,400 WATTS FOR 240 VOLT AND 11,000 WATTS FOR 480 VOLT.

SCHEMATIC DIAGRAM SHALL BE MOUNTED ON INSIDE OF CABINET DOOR.

THE UTILITY SHALL BE NOTIFIED IN WRITING 30 DAYS PRIOR TO DATE SERVICE WILL BE REQUIRED.

ALL OPENINGS IN CABINET SHALL BE COVERED AND SEALED WITH LIFETIME SILICONE CAULK.

ALL MATERIALS REQUIRED EXCLUDING REFERENCE ITEMS AS SHOWN ON DRAWING SHALL BE INCLUDED IN PRICE BID FOR CONTROL STATION.

MISSOURI HIGHWAYS AND TRANSPORTATION COMMISSION
105 WEST CAPITOL
JEFFERSON CITY, MO 65102
1-888-ASK-MODOT (1-888-275-6636)

STATE OF MISSOURI
EILEEN H. RACKERS
NUMBER PE-28336
PROFESSIONAL ENGINEER
THIS SHEET HAS BEEN SIGNED, SEALED AND DATED ELECTRONICALLY.

# HIGHWAY LIGHTING
## BASE MOUNTED
## CONTROL STATION
## 240 V OR 480 V - 4 CIRCUIT

| DATE EFFECTIVE: | 04/01/2005 | 901.30F | SHEET NO. |
|---|---|---|---|
| DATE PREPARED: | 9/14/2010 | | 1 OF 2 |

IF A SEAL IS PRESENT ON THIS SHEET IT HAS BEEN ELECTRONICALLY SEALED AND DATED.

| LIST OF MATERIALS | |
|---|---|
| ITEM | DESCRIPTION |
| 1 | SERVICE POLE 30' MIN.,CLASS 4 WOOD, CONTRACTOR PROVIDED, MoDOT OWNED* |
| 2 | #2 AWG MIN. CABLE, 600 VOLT * |
| 3 | SERVICE ENTRANCE HEAD |
| 4 | GUY CABLE, AS REQUIRED |
| 5 | RIGID CONDUIT, 2" MIN., WITH PREFORMED ELBOWS |
| 6 | LIGHTNING ARRESTER, VALVE TYPE, 2 POLE, 650 VOLT |
| 7 | METER SOCKET, 200 AMP, FOR SIGNALS |
| 8 | METER SOCKET, 200 AMP, FOR LIGHTING |
| 9 | LOCKING, RAINTIGHT, NEMA 4 SERVICE DISCONNECT BOX |
| 10 | INSULATED, GROUNDABLE NEUTRAL WIRE, 200 AMP MINIMUM |
| 11 | SIGNAL BREAKERS, SINGLE POLE, 40A MIN, TYPE A OR B * |
| 12 | LIGHTING BREAKER, 2 POLE, 240 VOLT, 100A, TYPE A OR B |
| 13 | 1/2" METAL CONDUIT |
| 14 | #2 AWG MIN. GROUND WIRE |
| 15 | GROUND ROD, 3/4" x 8' MIN. |
| 16 | #8 AWG MIN. CABLE, 600 VOLT * |
| 17 | CLASS B CONCRETE, 0.92 C.Y.± |
| 18 | THREADED CONDUIT HUB WITH SEALING WASHERS |
| 19 | WEATHERPROOF ADHESIVE LABEL (LIGHTING), VINYL RAISED LETTERING (OR EQUIVALENT, SEE DETAIL) |
| 20 | WEATHERPROOF ADHESIVE LABEL (SIGNALS), VINYL RAISED LETTERING (OR EQUIVALENT, SEE DETAIL) |
| 21 | W6 x 9 OR W6 x 15 GALVANIZED POST |
| 22 | #2 AWG MIN. CABLE, 600 VOLT |
| 23 | RIGID CONDUIT, 2" MINIMUM |
| * | SEE PLANS |

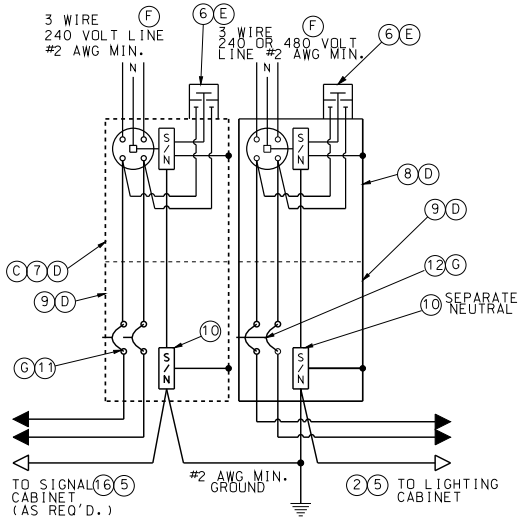


WIRING DIAGRAM

## LIGHTING AND/OR SIGNALS

NOTES:

(A) SERVICE POLE SHALL BE GUYED WHEN SPAN OF OVERHEAD SERVICE WIRE EXCEEDS 50 FEET.

(B) INCREASE 1 FOOT FOR EACH 5 FEET ABOVE 30 FEET.

(C) SERVICE DISCONNECT BOXES AND METER BOXES SHALL BE ALUMINUM OR STAINLESS STEEL. ALL HARDWARE, HINGES, CATCHES, ETC. SHALL BE STAINLESS STEEL.METER SOCKET FOR SIGNALS OR LIGHTING AND OTHER EQUIPMENT AND MATERIALS SHALL BE U.L. APPROVED, AND CONFORM TO THE REQUIREMENTS OF THE UTILITY COMPANY OR MUNICIPALITY PROVIDING POWER.

(D) SCHEMATIC DIAGRAM SHALL BE MOUNTED ON INSIDE OF CABINET DOOR.

(E) UTILITY COMPANY SHALL DECIDE IF LIGHTNING ARRESTERS ARE TO BE CONNECTED ON THE LOAD OR LINE SIDE OF THE METER. THE UTILITY COMPANY SHALL ALSO DECIDE IF THE LIGHTNING ARRESTER IS TERMINATED IN THE METER OR DISCONNECT CABINET. IF TERMINATED IN THE DISCONNECT CABINET, IT SHALL BE INSTALLED ON THE DISCONNECT CABINET.

(F) LIGHTING SYSTEM VOLTAGE OF 240 VOLTS OR 480 VOLTS AS SHOWN ON THE PLANS.

(G) BREAKERS SHALL CONFORM TO SEC. 901.4 OF THE STANDARD SPECIFICATIONS.

(H) IF SUBSURFACE CONDITIONS EXIST WHICH PROHIBIT THE PLACEMENT OF THE GROUND ROD IN A VERTICAL POSITION, THE ROD MAY BE DRIVEN AT AN OBLIQUE ANGLE NOT TO EXCEED 45 DEGREES FROM VERTICAL OR BURIED IN A TRENCH AT LEAST 30 IN. DEEP. CONNECTION TO GROUND ROD SHALL BE CADWELDED.

GENERAL NOTES:

FOR CABLE TYPES AND INSTALLATION, SEE STANDARD SPECIFICATIONS.

THE POWER SUPPLY ASSEMBLY TYPE IS SHOWN ON THE PLANS OR IS DESIGNATED IN THE CONTRACT.

THE UTILITY COMPANY SHALL BE NOTIFIED IN WRITING 30 DAYS PRIOR TO DATE SERVICE WILL BE REQUIRED.

WHERE SIGNAL OR LIGHTING POWER ONLY IS DESIGNATED, OMIT ITEMS NOT REQUIRED.

ALL OPENINGS IN ANY SERVICE BOX OR METER BOX SHALL BE COVERED AND SEALED WITH LIFETIME SILICONE CAULK.

ALL MATERIALS REQUIRED AS SHOWN ON DRAWING, INCLUDING CABLE AND CONDUIT FROM POWER SUPPLY ASSEMBLY TO UTILITY COMPANY FACILITIES, SHALL BE INCLUDED IN UNIT BID PRICE FOR POWER SUPPLY ASSEMBLY.

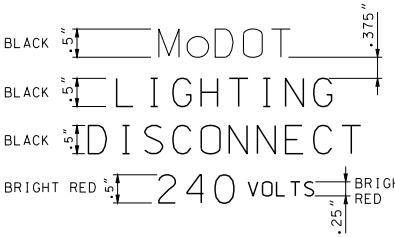


LABEL DETAIL (19) (240 VOLT) (F)

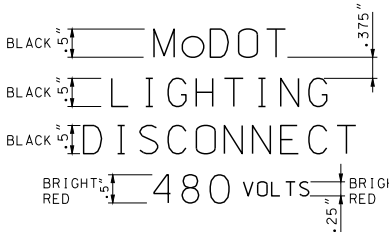


LABEL DETAIL (19) (480 VOLT) (F)

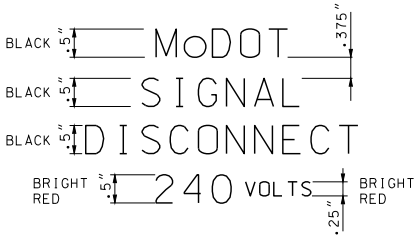


LABEL DETAIL (20)

MISSOURI HIGHWAYS AND TRANSPORTATION COMMISSION
105 WEST CAPITOL
JEFFERSON CITY, MO 65102
1-888-ASK-MODOT (1-888-275-6636)

STATE OF MISSOURI
EILEEN H. RACKERS
NUMBER PE-28336
PROFESSIONAL ENGINEER
THIS SHEET HAS BEEN SIGNED, SEALED AND DATED ELECTRONICALLY.

# HIGHWAY LIGHTING
POWER SUPPLY ASSEMBLY
SECONDARY SERVICE

DATE EFFECTIVE: 04/01/2002
DATE PREPARED: 4/1/2010

901.80D

SHEET NO. 1 OF 2

IF A SEAL IS PRESENT ON THIS SHEET IT HAS BEEN ELECTRONICALLY SEALED AND DATED.

PEDESTAL OR NEW STATE-OWNED POLE TO BE SET WITHIN 2' TO 4' OF RIGHT-OF-WAY LINE.

ALL SERVICE POWER SUPPLY ASSEMBLIES ARE TO BE LOCATED ON STATE PROPERTY.

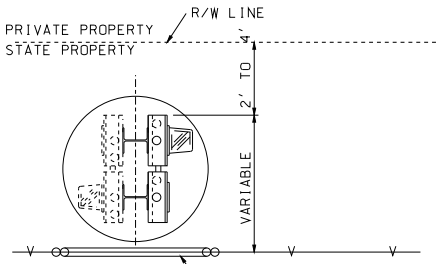


TOP VIEW

IF FENCE BLOCKS ACCESS TO POWER SUPPLY A 3' MIN. LOCKING GATE IS TO BE INSTALLED. (NO DIRECT PAY)

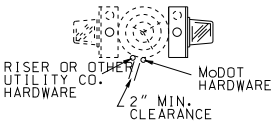


SECTION A-A

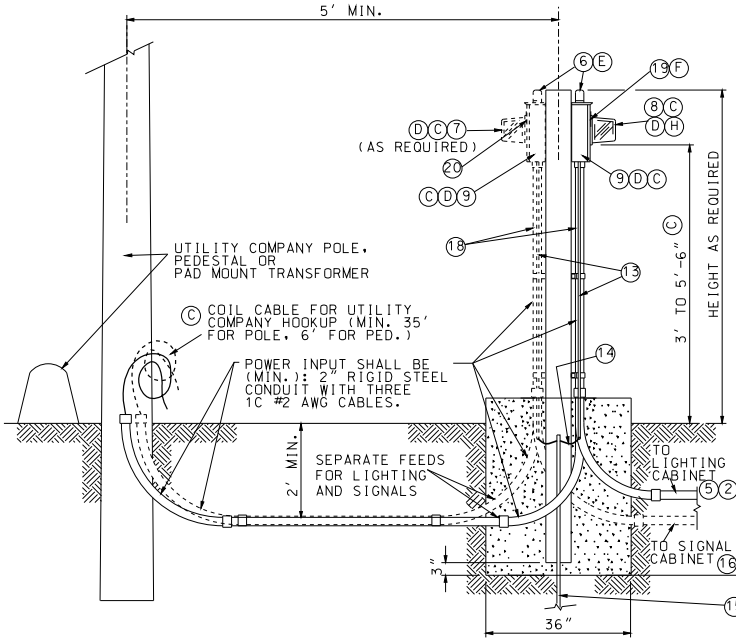


SIDE VIEW

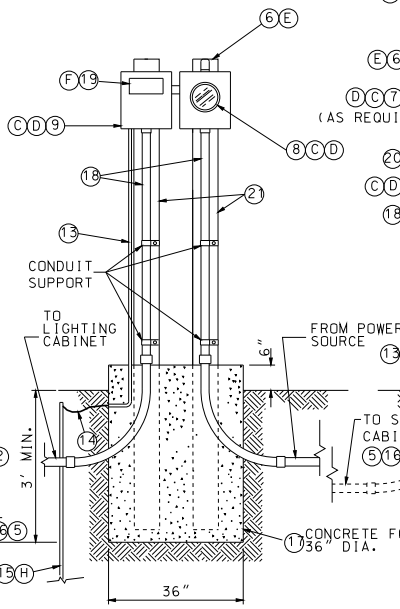


FRONT VIEW

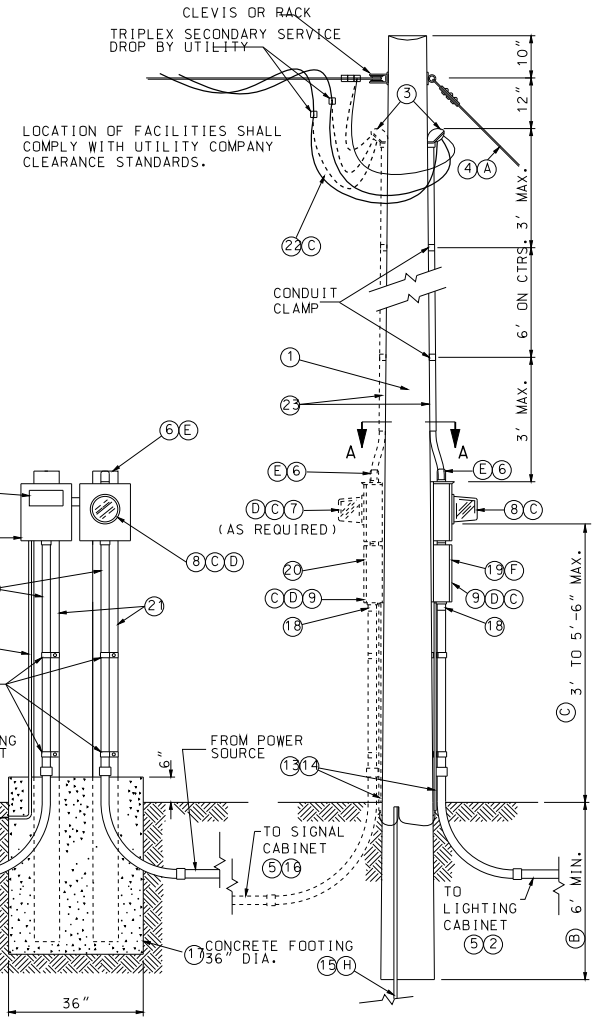


TYPE 1 (POLE) OVERHEAD SERVICE

TYPE 2 (PEDESTAL) UNDERGROUND SERVICE

NOTE:
CABLE AND CONDUIT FROM POWER SUPPLY ASSEMBLY TO UTILITY COMPANY FACILITIES SHALL BE INCLUDED IN PRICE BID FOR POWER SUPPLY ASSEMBLY.

IF A SEAL IS PRESENT ON THIS SHEET IT HAS BEEN ELECTRONICALLY SEALED AND DATED.

MISSOURI HIGHWAYS AND TRANSPORTATION COMMISSION
105 WEST CAPITOL
JEFFERSON CITY, MO 65102
1-888-ASK-MODOT (1-888-275-6636)

STATE OF MISSOURI EILEEN H. RACKERS NUMBER PE-28336 PROFESSIONAL ENGINEER
THIS SHEET HAS BEEN SIGNED, SEALED AND DATED ELECTRONICALLY.

# HIGHWAY LIGHTING
POWER SUPPLY ASSEMBLY
SECONDARY SERVICE

| DATE EFFECTIVE: 04/01/2002 | 901.80D | SHEET NO. 2 OF 2 |
|---|---|---|
| DATE PREPARED: 5/19/2010 | | |

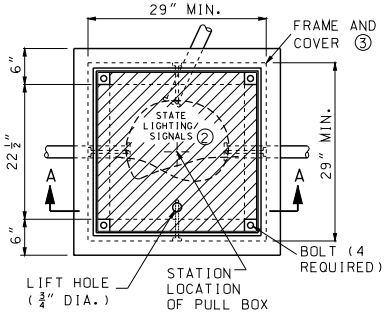


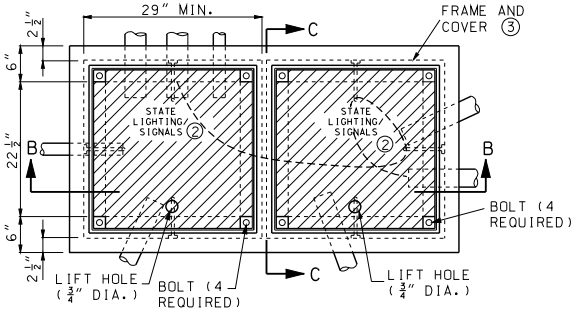


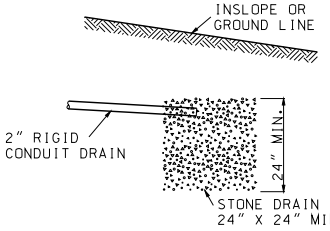


POROUS BACKFILL MATERIAL
TYPE A

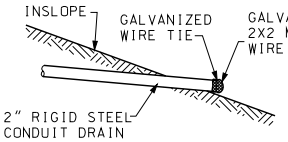


TYPE B

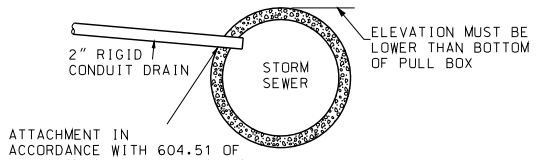


TYPE C

## TYPE II DRAIN OUTLET DETAILS

① ALL METAL CONDUITS SHALL BE ELECTRICALLY BONDED BY A GROUND BUSHING AND #6 AWG BARE COPPER WIRE. FOR PVC CONDUIT, ALL GROUND WIRES SHALL BE CONNECTED.

② SIGNAL PULL BOXES SHALL BE EMBOSSED "STATE SIGNALS" AND LIGHTING PULL BOXES "STATE LIGHTING."

③ PULL BOX FRAMES AND COVERS SHALL BE CAST IRON AND THE FOLLOWING MINIMUM DIMENSIONS:

| | |
|---|---|
| FRAME SIZE: | 29" x 29" |
| FRAME HEIGHT: | 4¼" |
| OPENING SIZE: | 22½" x 22½" |
| FRAME WEIGHT: | 120 LBS. |
| COVER SIZE: | 22⅝" x 22⅝" |
| COVER THICKNESS: | ¾" |
| COVER WEIGHT: | 140 LBS. |

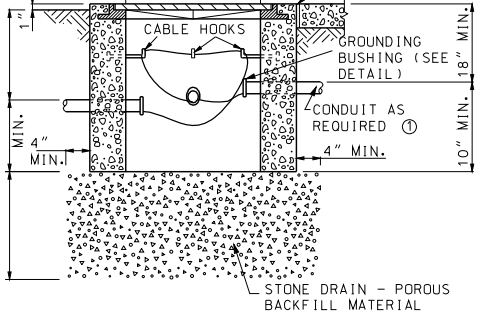


SECTION A-A
TYPE I DRAIN TYPE

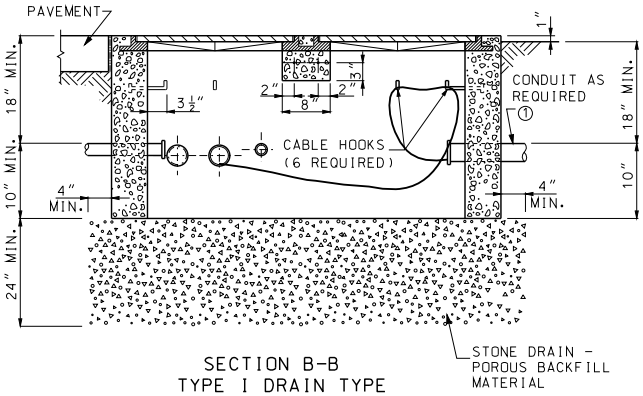


SECTION B-B
TYPE I DRAIN TYPE

GROUNDING BUSHING (TYP) ①

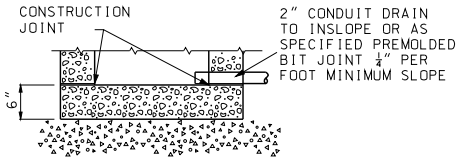


SECTION A-A
TYPE II DRAIN TYPE
(SEE DRAIN OUTLET DETAILS)
(SECTION ABOVE BREAK APPLICABLE TO TYPE I DRAIN)

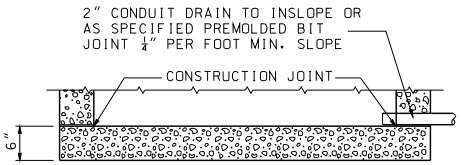


SECTION B-B
TYPE II DRAIN TYPE
(SEE DRAIN OUTLET DETAILS)
(SECTION ABOVE BREAK APPLICABLE TO TYPE I DRAIN)

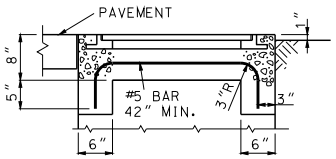


SECTION C-C

## STANDARD CONCRETE PULL BOX

## DOUBLE CONCRETE PULL BOX, TYPE A

GENERAL NOTES:

ALL DIMENSIONS SHOWN ARE NOMINAL.

BOLT CLEANOUT DETAIL SHALL BE APPROVED BY ENGINEER.

PAVEMENT AND SUBGRADE SHALL BE AS SHOWN ON PLANS.

STONE DRAIN MATERIAL SHALL CONFORM TO SECTION 1009 OF THE STANDARD SPECIFICATIONS.


MISSOURI HIGHWAYS AND TRANSPORTATION COMMISSION
105 WEST CAPITOL
JEFFERSON CITY, MO 65102
1-888-ASK-MODOT (1-888-275-6636)


STATE OF MISSOURI
KATHRYN PHILLIPS HARVEY
NUMBER PE-23751
PROFESSIONAL ENGINEER
THIS SHEET HAS BEEN SIGNED, SEALED AND DATED ELECTRONICALLY.

# TRAFFIC SIGNALS
CONCRETE PULL BOXES

| | | | |
|---|---|---|---|
| DATE EFFECTIVE: | 11/01/2010 | 902.20G | SHEET NO. 1 OF 3 |
| DATE PREPARED: | 9/3/2010 | | |

IF A SEAL IS PRESENT ON THIS SHEET IT HAS BEEN ELECTRONICALLY SEALED AND DATED.

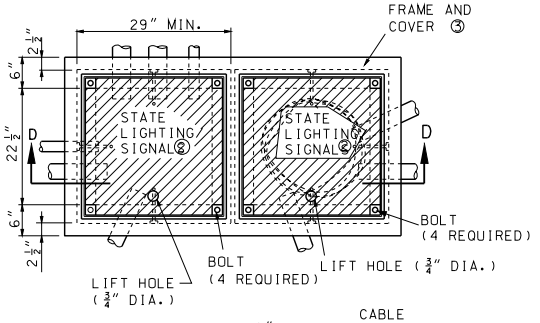


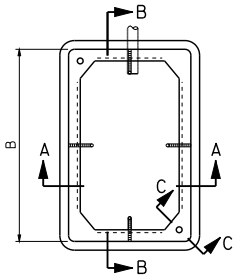


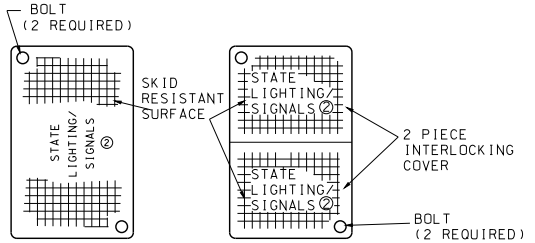


CLASS 1 OR 2 CLASS 3

## PREFORMED PULL BOX COVER

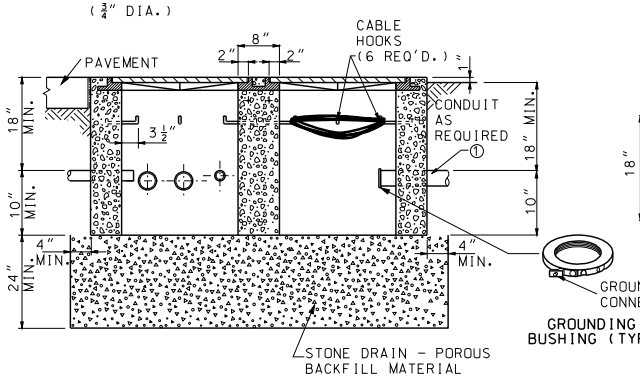


SECTION D-D
TYPE I DRAIN TYPE

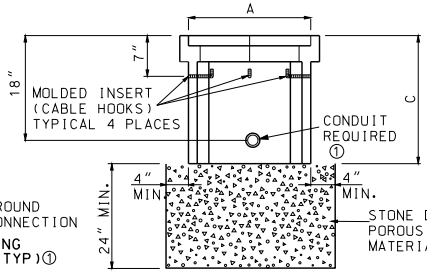


SECTION A-A
TYPE I DRAIN TYPE

| NUMBER OF ENTERING CONDUCTORS | CLASS | PREFORMED PULL BOX MINIMUM DIMENSIONS | | |
|---|---|---|---|---|
| | | A | B | C |
| < 23 | 1 | 17" | 30" | 22" |
| 23 - 68 | 2 | 24" | 36" | 24" |
| > 68 | 3 | 30" | 48" | 36" |

① ALL METAL CONDUITS SHALL BE ELECTRICALLY BONDED BY A GROUND BUSHING AND #6 AWG BARE COPPER WIRE. FOR PVC CONDUIT, ALL GROUND WIRES SHALL BE CONNECTED.

② SIGNAL PULL BOXES SHALL BE EMBOSSED "STATE SIGNALS" AND LIGHTING PULL BOXES "STATE LIGHTING."

③ PULL BOX FRAMES AND COVERS SHALL BE CAST IRON AND THE FOLLOWING MINIMUM DIMENSIONS:

| | |
|---|---|
| FRAME SIZE: | 29" X 29" |
| FRAME HEIGHT: | 4¼" |
| OPENING SIZE: | 22½" x 22½" |
| FRAME WEIGHT: | 120 LBS. |
| COVER SIZE: | 22⅝" x 22⅝" |
| COVER THICKNESS: | ¾" |
| COVER WEIGHT: | 140 LBS. |

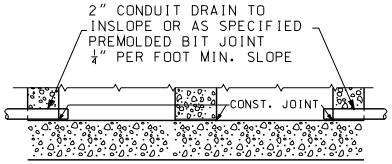


TYPE II DRAIN TYPE
(SEE DRAIN OUTLET DETAILS)
(SECTION ABOVE BREAK APPLICABLE TO TYPE I DRAIN.)

## DOUBLE CONCRETE PULL BOX, TYPE B

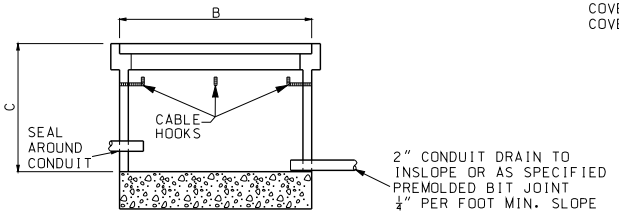


SECTION B-B
TYPE II DRAIN TYPE

## PREFORMED PULL BOX

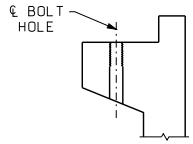


SECTION C-C
## TYPICAL BOLT CLEANOUT

GENERAL NOTES:

IF AN EXTENSION IS USED WITH A PREFORMED BOX, THE LIP OF THE EXTENSION MAY BE INTERIOR OR EXTERIOR. THE EXTENSION SHALL BE COMPATIBLE AND FROM THE SAME MANUFACTURER.

IF PREFORMED PULL BOXES ARE SPECIFIED, THE CONTRACTOR MAY USE THE STANDARD CONCRETE PULL BOX IN LIEU OF THE CLASS 1 OR 2 PREFORMED PULL BOX OR THE DOUBLE CONCRETE PULL BOX, TYPE A, IN LIEU OF THE CLASS 3 PREFORMED PULL BOXES.

MISSOURI HIGHWAYS AND TRANSPORTATION COMMISSION
105 WEST CAPITOL
JEFFERSON CITY, MO 65102
1-888-ASK-MODOT (1-888-275-6636)

STATE OF MISSOURI
KATHRYN PHILLIPS HARVEY
NUMBER PE-23751
PROFESSIONAL ENGINEER
THIS SHEET HAS BEEN SIGNED, SEALED AND DATED ELECTRONICALLY.

# TRAFFIC SIGNALS
CONCRETE AND PREFORMED PULL BOXES

DATE EFFECTIVE: 11/01/2010
DATE PREPARED: 9/3/2010

902.20G

SHEET NO. 2 OF 3

IF A SEAL IS PRESENT ON THIS SHEET IT HAS BEEN ELECTRONICALLY SEALED AND DATED.

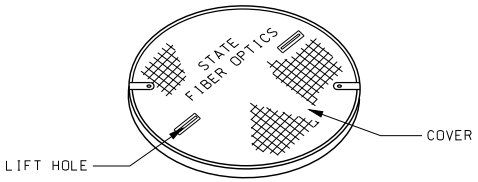


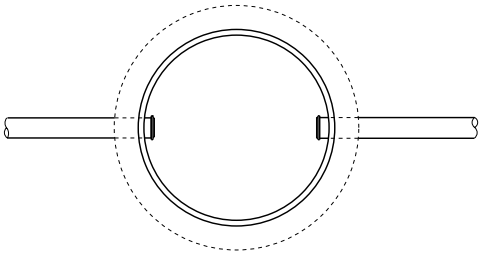

PLAN

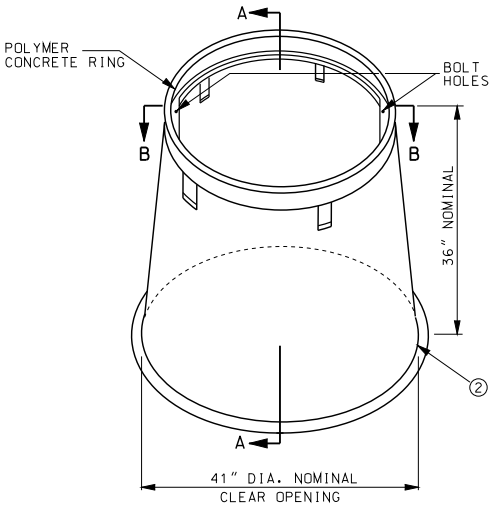


CIRCULAR PULL BOX
CLASS 5

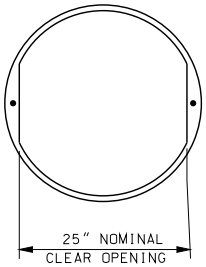


SECTION B-B

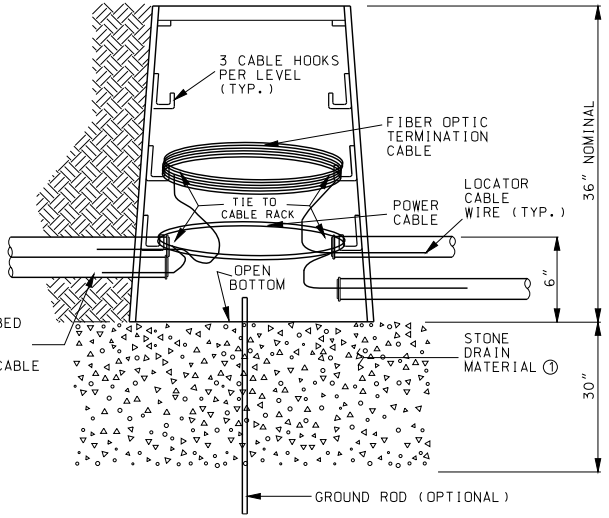


SECTION A-A
TYPE I DRAIN TYPE

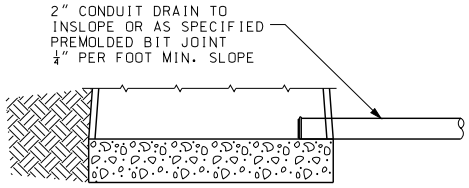


TYPE II DRAIN TYPE
(SEE DRAIN OUTLET DETAILS)
(SECTION ABOVE BREAK APPLICABLE TO TYPE I DRAIN.)

1. AGGREGATE SHALL BE TYPE 1 CONFORMING TO SEC 1007.
2. BOX SHALL BE OF A FLARE DESIGN AND HAVE A LIP FOR STABILIZATION.

GENERAL NOTES:

A MINIMUM OF NINE HOOKS, INSTALLED IN THREE LEVELS, SHALL BE INCLUDED WITH EACH PULL BOX.

IF SUBSURFACE CONDITIONS EXIST WHICH PROHIBIT THE PLACEMENT OF THE GROUND ROD IN A VERTICAL POSITION, THE ROD MAY BE DRIVEN AT AN OBLIQUE ANGLE NOT TO EXCEED 45 DEGREES FROM VERTICAL OR BURIED IN A TRENCH AT LEAST 30 IN. DEEP. CONNECTION TO GROUND ROD SHALL BE CADWELDED.

THE CIRCULAR PULL BOX COVER SHOULD BE SIZED TO FIT A BOX WITH A CLEAR OPENING OF 25".

MISSOURI HIGHWAYS AND TRANSPORTATION COMMISSION
105 WEST CAPITOL
JEFFERSON CITY, MO 65102
1-888-ASK-MODOT (1-888-275-6636)

STATE OF MISSOURI
KATHRYN PHILLIPS HARVEY
NUMBER PE-23751
PROFESSIONAL ENGINEER
THIS SHEET HAS BEEN SIGNED, SEALED AND DATED ELECTRONICALLY.

# TRAFFIC SIGNALS
## CONCRETE AND PREFORMED PULL BOXES

| DATE EFFECTIVE: | 11/01/2010 | 902.20G | SHEET NO. 3 OF 3 |
|---|---|---|---|
| DATE PREPARED: | 9/3/2010 | | |

IF A SEAL IS PRESENT ON THIS SHEET IT HAS BEEN ELECTRONICALLY SEALED AND DATED.

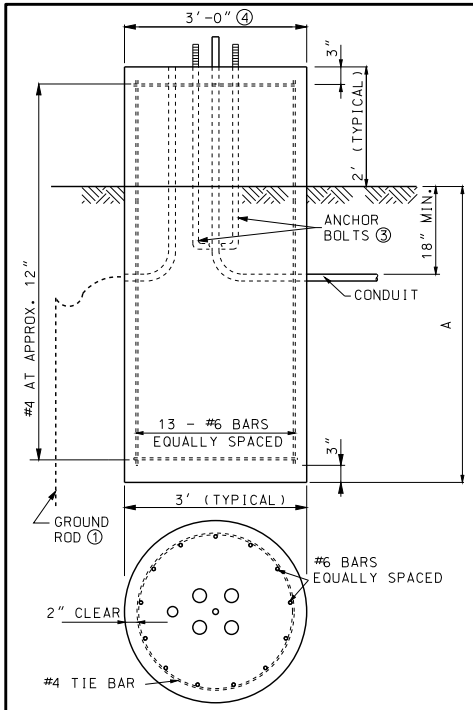


TYPE A (FLAT GROUND)

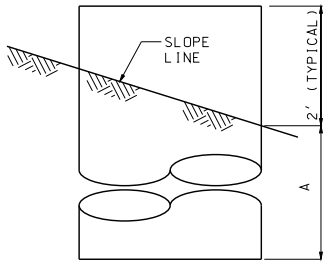


TYPE A (FILL)

(FOR ADDITIONAL DETAILS SEE TYPE A FLAT GROUND)

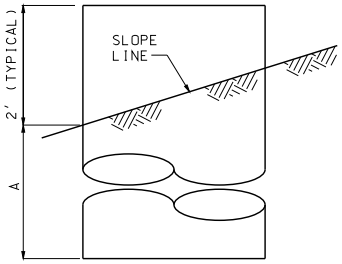


TYPE A (CUT)

(FOR ADDITIONAL DETAILS SEE TYPE A FLAT GROUND)

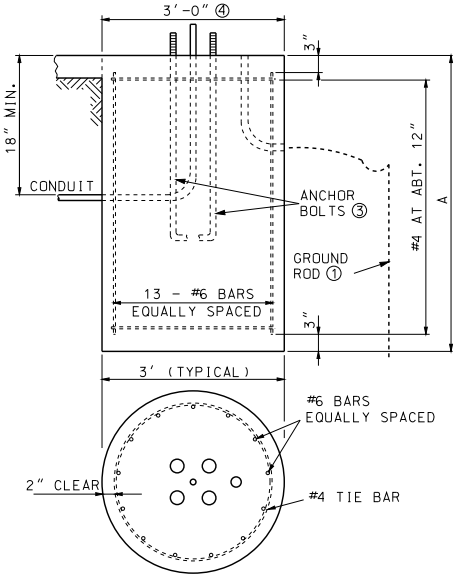


TYPE F

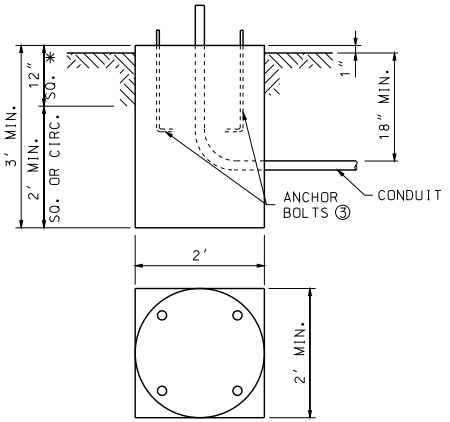


✳ SURFACE OF BASE TO BE CONSTRUCTED SQUARE FOR A DEPTH OF 12″.

TYPE C

## POST BASES

| POST BASES | | |
|---|---|---|
| POST TYPE | ARM LENGTH (FEET) ⑤ | BASE TYPE ⑥ |
| C OR CL | 15 - 25 | A-9 OR F-9 |
| C OR CL | 30 - 35 | A-9.5 OR F-9.5 |
| C OR CL | 40 - 55 | A-10.5 OR F-10.5 |
| B OR BL | 15 - 25 | A-10 OR F-10 |
| B OR BL | 30 - 35 | A-11 OR F-11 |
| B OR BL | 40 - 55 | A-12 OR F-12 |

| STEEL AND CONCRETE REQUIREMENTS FOR POST BASES ③ | | | | |
|---|---|---|---|---|
| BASES | | #6 STEEL BAR | | CONC. C.Y. |
| TYPE | A ⑦ | LENGTH | WEIGHT LBS. | |
| A-9 | 9′-0″ | 10′-6″ | 270 | 2.88 |
| A-9.5 | 9′-6″ | 11′-0″ | 280 | 3.01 |
| A-10 | 10′-0″ | 11′-6″ | 300 | 3.14 |
| A-10.5 | 10′-6″ | 12′-0″ | 310 | 3.27 |
| A-11 | 11′-0″ | 12′-6″ | 320 | 3.40 |
| A-12 | 12′-0″ | 13′-6″ | 350 | 3.67 |
| F-9 | 9′-0″ | 8′-6″ | 230 | 2.36 |
| F-9.5 | 9′-6″ | 9′-0″ | 240 | 2.49 |
| F-10 | 10′-0″ | 9′-0″ | 240 | 2.62 |
| F-10.5 | 10′-6″ | 10′-0″ | 260 | 2.75 |
| F-11 | 11′-0″ | 10′-6″ | 270 | 2.88 |
| F-12 | 12′-0″ | 11′-6″ | 300 | 3.14 |
| C✳ | | | | 0.44 |

✳ SURFACE OF BASE TO BE CONSTRUCTED SQUARE FOR A DEPTH OF 12″.

| BASE EMBEDMENT IN SOLID ROCK | |
|---|---|
| SOLID ROCK ENCOUNTER POINT | REQUIRED EMBEDMENT FOR BASE TYPE A-10 F-10 |
| AT SURFACE | 4′-9″ |
| AT ONE-FOURTH NORMAL DEPTH | 4′-0″ |
| AT ONE-HALF NORMAL DEPTH | 3′-3″ |
| AT THREE-FOURTHS NORMAL DEPTH | 1′-3″ |

1. REQUIRED EMBEDMENT DEPTHS CAN BE INTERPOLATED BETWEEN ENCOUNTER POINTS FOR OTHER SOLID ROCK ENCOUNTER DEPTHS.
2. NORMAL LENGTHS FOR ANCHOR BOLTS AND REINFORCING STEEL WILL BE REQUIRED.
3. CORE DRILL HOLES FOR ANCHOR BOLTS AND REINFORCING STEEL IN SOLID ROCK SHALL BE PROVIDED. CORE DRILL HOLES SHALL BE TWICE THE DIAMETER OF THE ANCHOR BOLT AND REINFORCING STEEL DIAMETER AND TO WITHIN 3 INCHES OF THE NORMAL BASE DEPTH.
4. IF SOIL, SHALE, GRAVEL, FRACTURED ROCK, OR VOIDS ARE ENCOUNTERED DURING CORE DRILLING, THE ROCK SHALL BE REMOVED TO THE POINT OF ENCOUNTER.
5. ANCHOR BOLTS AND REINFORCING STEEL SHALL BE GROUTED IN THE CORE DRILL HOLES WITH NON-SHRINK GROUT HAVING A MINIMUM STRENGTH OF 9,000 POUNDS IN 24 HOURS.
6. STRAIGHT ANCHOR BOLTS OF THE LENGTH SHOWN IN THE ANCHOR BOLT TABLE UNDER THE COLUMN "BOLT LENGTH" ARE ADEQUATE FOR USE IN GROUTED CORE DRILLED HOLES.

① APPLICABLE ONLY WHERE CONTROLLER IS MOUNTED TO A SIGNAL POLE.

② BASE PLATE SHALL STAY WITHIN THE TOP OF THE POST BASE DIAMETER.

③ ANCHOR BOLT DIMENSIONS ARE SHOWN ON THE MANUFACTURER'S APPROVED DRAWINGS.

④ MAXIMUM BOLT CIRCLE DIAMETER IS 26″. BASE PLATE SHALL STAY WITHIN THE TOP OF THE POST BASE DIAMETER.

⑤ ARM LENGTH DETERMINED BY LENGTH OF LONGEST ARM FOR TYPE B & BL SIGNAL POSTS.

⑥ BASE TYPE A OR F DETERMINED BY LOCATION OF POST BASE.

⑦ SOIL DEPTH, NO ROCK.

⑧ INCLUDE #4 TIE BAR.

⑨ WHEN CONCRETE BASE IS LOCATED WITHIN 8″ CONCRETE DIVISIONAL ISLAND, EMBEDMENT LENGTH MAY BE REDUCED BY ½ DIAMETER OF THE DRILLED SHAFT.

MISSOURI HIGHWAYS AND TRANSPORTATION COMMISSION
105 WEST CAPITOL
JEFFERSON CITY, MO 65102
1-888-ASK-MODOT (1-888-275-6636)

STATE OF MISSOURI KATHRYN PHILLIPS HARVEY NUMBER PE-23751 PROFESSIONAL ENGINEER
THIS SHEET HAS BEEN SIGNED, SEALED AND DATED ELECTRONICALLY.

# TRAFFIC SIGNALS

POST BASES

DATE EFFECTIVE: 02/01/2008
DATE PREPARED: 5/7/2012

902.30P

SHEET NO. 1 OF 2

IF A SEAL IS PRESENT ON THIS SHEET IT HAS BEEN ELECTRONICALLY SEALED AND DATED.

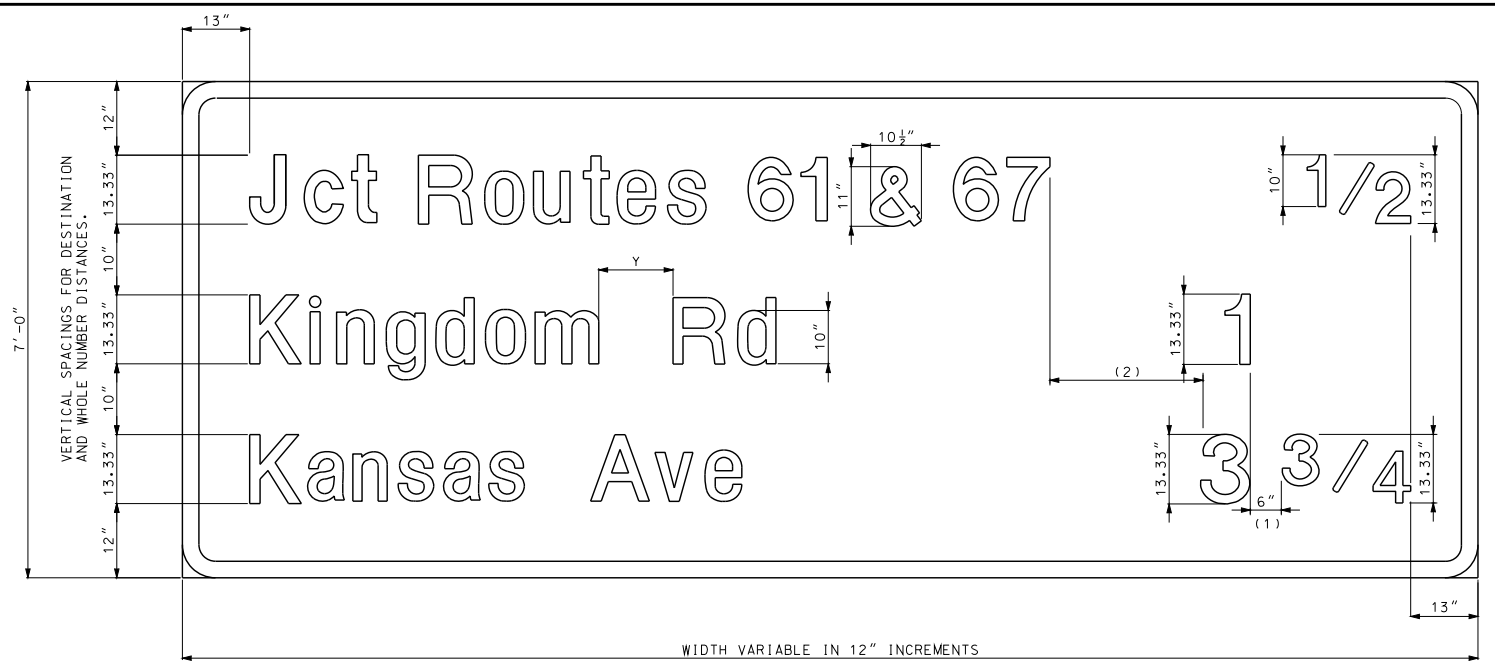


LEGEND, SYMBOLS & BORDER

L-3 DIRECT APPLIED (CUT FROM MATERIAL SHOWN ON PLANS.)

BACKGROUND REFLECTIVE SHEETING

R2 REFER TO MISSOURI SPECIFICATION SECTION 1042.2.7.2
R4 REFER TO MISSOURI SPECIFICATION SECTION 1042.2.7.3

NOTES:

"ROUTE" SHALL NOT BE ABBREVIATED.

INTERSTATES SHALL BE REFERENCED WITH A CAPITAL "I", (EX. ROUTE I-29).

Y = UPPER CASE LETTER HEIGHT.

USE HYPHEN TO JOIN 2 ROUTES SHARING THE SAME ROADWAY.

USE AN AMPERSAND TO SEPERATE 2 ROUTES ON INDIVIDUAL ROADWAYS.

USE COMMAS AND AN AMPERSAND TO SEPERATE 3 OR MORE ROUTES ON INDIVIDUAL ROADWAYS.

(1) 6" STANDARD, HORIZONTALLY ALIGN RIGHT EXTREME EDGE OF WHOLE NUMERALS, REGARDLESS OF LINE OF COPY.

HORIZONTALLY ALIGN RIGHT EXTREME EDGE OF FRACTIONS REGARDLESS OF LINE COPY.

WHEN NO FRACTIONS EXIST, RIGHT EXTREME EDGE OF WHOLE NUMERALS SHALL BE 13" FROM EDGE OF SIGN.

(2) UPPER CASE LETTER HEIGHT FROM LONGEST DESTINATION TO LONGEST DISTANCE.

INCREASE THIS SPACE TO PROVIDE EVEN 12" WIDTH FOR ENTIRE SIGN.

GENERAL NOTES (ALL SIGNS):

GROUND MOUNTED SIGNS GREATER THAN 6 FEET WIDE OR SIGNS GREATER THAN 30 SQUARE FEET SHALL BE STRUCTURAL.

GUIDE SIGN WIDTH VARIABLE IN 12" INCREMENTS.

GUIDE SIGN HEIGHT VARIABLE IN 12" INCREMENTS.

STATE ABBREVIATIONS SHALL BE THE STANDARD 2-LETTER POSTAL ABBREVIATION, AND SHALL BE DETAILED IN ALL-CAPS.

SEE OTHER STANDARD DRAWINGS FOR ARROW DETAILS.

| BORDER (ALL SIGNS) | | | |
|---|---|---|---|
| CORNER RADII | | WIDTH | |
| SIGN HEIGHT | INCHES | LETTER SIZE | INCHES |
| LESS THAN OR EQUAL TO 6' | 6 | LESS THAN 12" | 1 |
| 7' | 9 | | |
| GREATER THAN OR EQUAL TO 8' | 12 | 12" OR LARGER | 2 |

| GENERAL SIGN DATA | | | | |
|---|---|---|---|---|
| STR2L-3 | TYPE | REFLECTIVE SHEETING TYPE | COLOR | LETTER SERIES |
| BACKGROUND | | R2 | GREEN | |
| LEGEND | L-3 | R4 | WHITE | E(M) |
| SYMBOLS | L-3 | R4 | VAR. | |
| BORDER | L-3 | R4 | WHITE | |
| SUBSTRATE | STRUCTURAL | | | |

MISSOURI HIGHWAYS AND TRANSPORTATION COMMISSION
105 WEST CAPITOL
JEFFERSON CITY, MO 65102
1-888-ASK-MODOT (1-888-275-6636)

STATE OF MISSOURI
EILEEN H. RICKERS
NUMBER PE-28338
PROFESSIONAL ENGINEER
THIS SHEET HAS BEEN SIGNED, SEALED AND DATED ELECTRONICALLY.

# HIGHWAY SIGNING STRUCTURAL SIGNS

INTERCHANGE SEQUENCE

DATE EFFECTIVE: 02/01/2011
DATE PREPARED: 12/22/2011

903.02AL

SHEET NO. 1 OF 19

IF A SEAL IS PRESENT ON THIS SHEET IT HAS BEEN ELECTRONICALLY SEALED AND DATED.

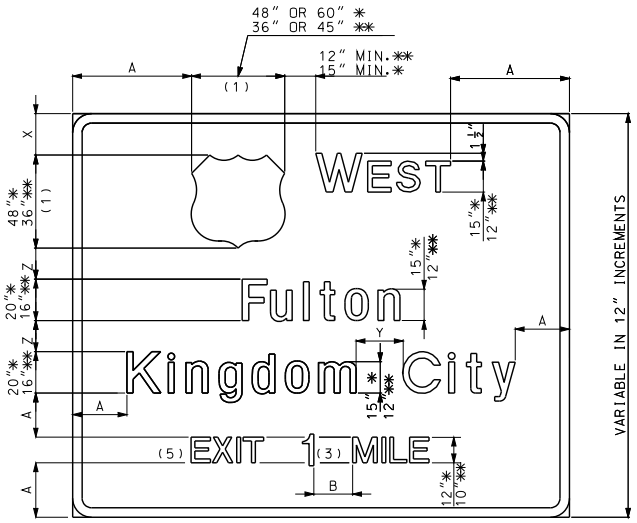


## TYPICAL ADVANCE GUIDE

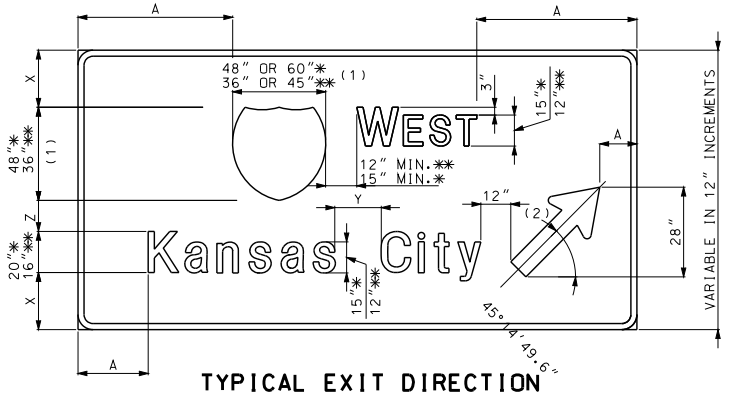


## TYPICAL EXIT DIRECTION

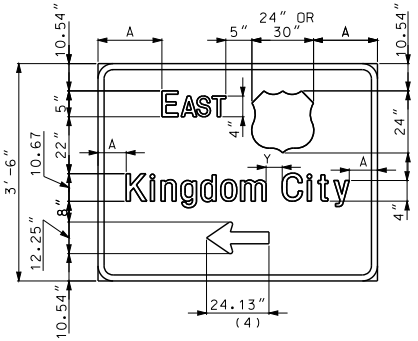


## CROSSROAD GUIDE

NOTES:

CARDINAL DIRECTION PLACED ON EXIT SIDE OF SHIELD.

(1) ALTERNATE ROUTE SHIELDS MAY BE USED AS REQUIRED.

(2) TYPE A ARROW AT 45° STANDARD REGARDLESS OF ROADWAY GEOMETRICS.

(3) WHOLE NUMERALS, 18" GROUND MOUNT, 15" OVERHEAD.

(4) LENGTH OF ARROW IS EQUAL TO 50% OF LEGEND LENGTH WITH MAXIMUM OF 48" IN 12" INCREMENTS.

(5) IF EXIT NUMBER PANELS ARE USED WITH THE ADVANCE GUIDE SIGN, "EXIT" WILL NOT BE REQUIRED.

GUIDE SIGN LEGEND

A = VARIABLE SO THAT THE OVERALL SIGN WIDTH IS IN 12" INCREMENTS MINIMUM LOWER CASE HEIGHT.
B = 1.5 TIMES WORDING LETTER HEIGHT.
X = APPROXIMATELY THE UPPERCASE LETTER HEIGHT. VARY THIS DIMENSION FOR HEIGHT AND WIDTH INCREMENTAL ROUNDING.
Y = UPPER CASE LETTER HEIGHT
Z = LOWER CASE LETTER HEIGHT
* = GROUND MOUNT
** = OVERHEAD

NOTES:

NUMERAL TO FRACTION SPACE, 8" GROUND MOUNT, 6" OVERHEAD.

HORIZONTALLY CENTER ALL LINES OF TEXT AND SYMBOLS.

BOX DIMENSION FRACTIONS: OVERHEAD IS 15" H x 20"W FOR 1/2, 1/4, 15"H x 25"W FOR 3/4, GROUND MOUNT 18"H x 24"W FOR 1/2, 1/4, 18"H x 30"W FOR 3/4.

LEGEND, SYMBOLS & BORDER

L-3 DIRECT APPLIED (CUT FROM MATERIAL SHOWN ON PLANS.)

BACKGROUND REFLECTIVE SHEETING

R2 REFER TO MISSOURI SPECIFICATION SECTION 1042.2.7.2
R4 REFER TO MISSOURI SPECIFICATION SECTION 1042.2.7.3

| BORDER (ALL SIGNS) | | | |
|---|---|---|---|
| CORNER RADII | | WIDTH | |
| SIGN HEIGHT | INCHES | LETTER SIZE | INCHES |
| LESS THAN OR EQUAL TO 6' | 6 | LESS THAN 12" | 1 |
| 7' | 9 | | |
| GREATER THAN OR EQUAL TO 8' | 12 | 12" OR LARGER | 2 |

| GENERAL SIGN DATA | | | | | |
|---|---|---|---|---|---|
| | | REFL. SHEETING TYPE | | | LETTER |
| STR2L-3 | TYPE | GROUND | OVERHEAD | COLOR | SERIES |
| BACKGROUND | L-3 | R2 | R2 | GREEN | |
| LEGEND | L-3 | R4 | R4 | WHITE | E(M) |
| SYMBOLS | L-3 | R4 | R4 | VAR. | |
| BORDER | L-3 | R4 | R4 | WHITE | |
| SUBSTRATE | STRUCTURAL (SEE GEN. NOTES ON SH. 1) | | | | |

MISSOURI HIGHWAYS AND TRANSPORTATION COMMISSION
105 WEST CAPITOL
JEFFERSON CITY, MO 65102
1-888-ASK-MODOT (1-888-275-6636)

STATE OF MISSOURI
ELIESH H. RICKERS
NUMBER PE-28338
PROFESSIONAL ENGINEER
THIS SHEET HAS BEEN SIGNED, SEALED AND DATED ELECTRONICALLY.

# HIGHWAY SIGNING STRUCTURAL SIGNS

INTERCHANGE SEQUENCE

DATE EFFECTIVE: 02/01/2012
DATE PREPARED: 12/22/2011

903.02AL

SHEET NO. 2 OF 19

IF A SEAL IS PRESENT ON THIS SHEET IT HAS BEEN ELECTRONICALLY SEALED AND DATED.

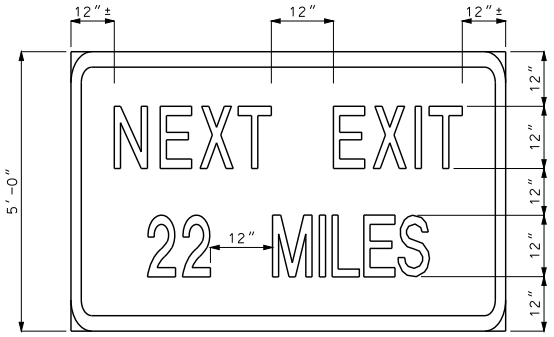


E2-1A

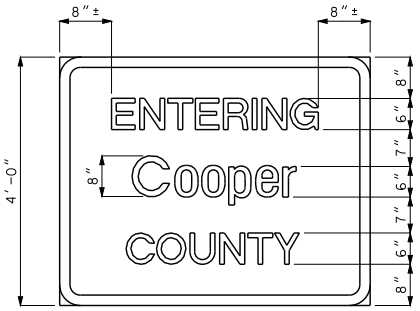


COUNTY LINE

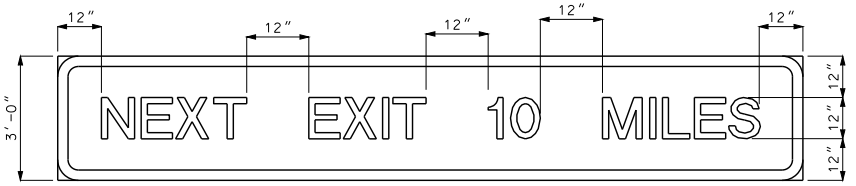


E2-1
NEXT EXIT SUPPLEMENTAL
ADVANCE GUIDE

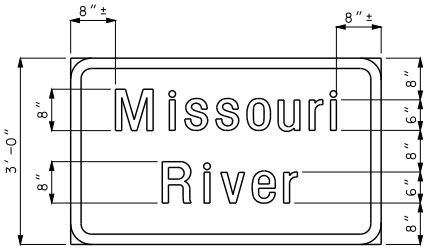


RIVER/CREEK
(TWO LINES)

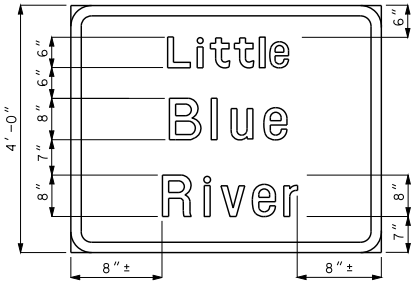


RIVER/CREEK
(THREE LINES)

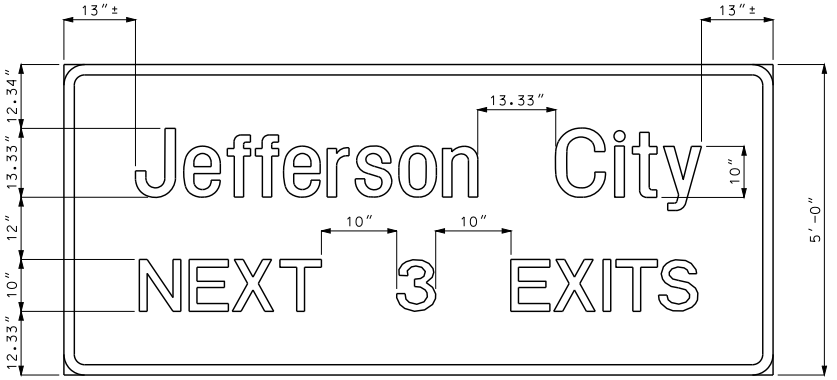


NEXT (X) EXITS

| BORDER (ALL SIGNS) | | | |
|---|---|---|---|
| CORNER RADII | | WIDTH | |
| SIGN HEIGHT | INCHES | LETTER SIZE | INCHES |
| LESS THAN OR EQUAL TO 6' | 6 | LESS THAN 12" | 1 |
| 7' | 9 | | |
| GREATER THAN OR EQUAL TO 8' | 12 | 12" OR LARGER | 2 |

LEGEND, SYMBOLS & BORDER

L-3 DIRECT APPLIED (CUT FROM MATERIAL SHOWN ON PLANS.)

| GENERAL SIGN DATA | | | | |
|---|---|---|---|---|
| STR2L-3 | TYPE | REFLECTIVE SHEETING TYPE | COLOR | LETTER SERIES |
| BACKGROUND | | R2 | GREEN | |
| LEGEND | L-3 | R4 | WHITE | E(M) |
| SYMBOLS | L-3 | R4 | VAR. | |
| BORDER | L-3 | R4 | WHITE | |
| SUBSTRATE | STRUCTURAL (SEE GEN. NOTES ON SH. 1) | | | |

BACKGROUND REFLECTIVE SHEETING

R2 REFER TO MISSOURI SPECIFICATION SECTION 1042.2.7.2
R4 REFER TO MISSOURI SPECIFICATION SECTION 1042.2.7.3

IF A SEAL IS PRESENT ON THIS SHEET IT HAS BEEN ELECTRONICALLY SEALED AND DATED.

MISSOURI HIGHWAYS AND TRANSPORTATION COMMISSION
105 WEST CAPITOL
JEFFERSON CITY, MO 65102
1-888-ASK-MODOT (1-888-275-6636)

STATE OF MISSOURI
ELIESH H. RICKERS
NUMBER PE-28336
PROFESSIONAL ENGINEER
THIS SHEET HAS BEEN SIGNED, SEALED AND DATED ELECTRONICALLY.

# HIGHWAY SIGNING
## STRUCTURAL SIGNS
MISC. FREEWAY AND EXPRESSWAY GUIDE SIGNS

DATE EFFECTIVE: 02/01/2012
DATE PREPARED: 12/22/2011

903.02AL

SHEET NO. 3 OF 19

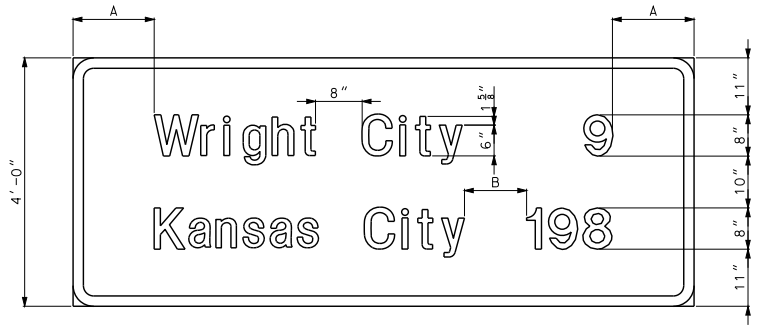


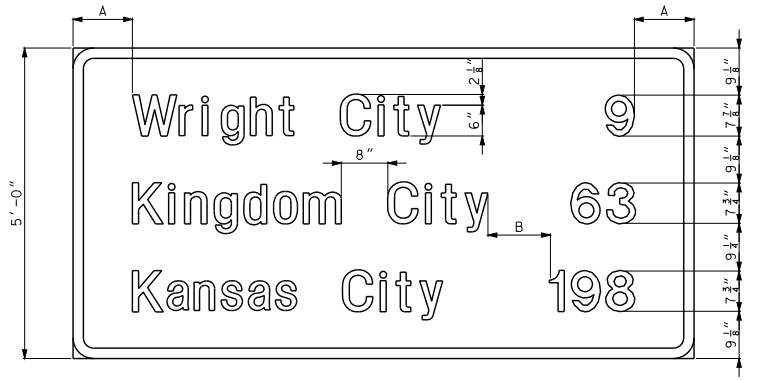


NOTE: FOR INTERSTATE, LAST LINE OF COPY SHALL INDICATE APPROVED AASHTO CONTROL CITY.

## POST INTERCHANGE/INTERSECTION DISTANCE

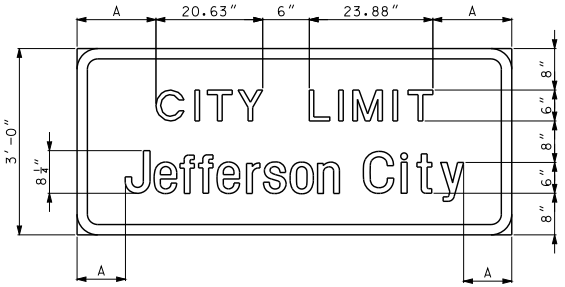


## CITY LIMITS

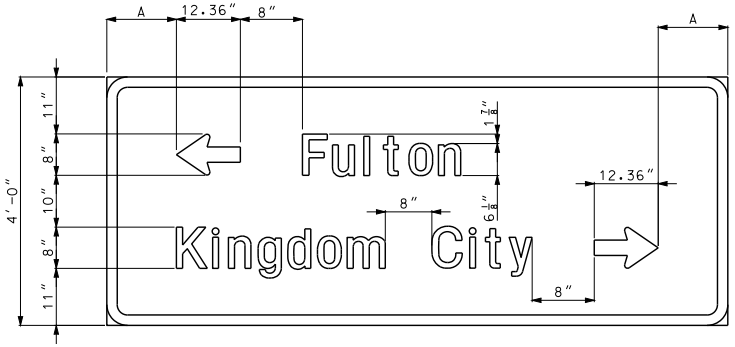


NOTE: DESTINATIONS ARE PLACED IN THE FOLLOWING ORDER: AHEAD, LEFT, RIGHT. TYPE D ARROWS SHALL BE USED.

## ADVANCE INTERSECTION DESTINATION

A = VARIABLE SO THAT THE OVERALL SIGN WIDTH IS IN 12" INCREMENTS, MINIMUM LOWER CASE HEIGHT.

B = UPPER CASE LETTER HEIGHT, FROM LONGEST DESTINATION TO LONGEST DISTANCE, REGARDLESS OF LINE COPY.

| BORDER (ALL SIGNS) | | | |
|---|---|---|---|
| CORNER RADII | | WIDTH | |
| SIGN HEIGHT | INCHES | LETTER SIZE | INCHES |
| LESS THAN OR EQUAL TO 6' | 6 | LESS THAN 12" | 1 |
| 7' | 9 | | |
| GREATER THAN OR EQUAL TO 8' | 12 | 12" OR LARGER | 2 |

| GENERAL SIGN DATA | | | | |
|---|---|---|---|---|
| STR2L-3 | TYPE | REFLECTIVE SHEETING TYPE | COLOR | LETTER SERIES |
| BACKGROUND | | R2 | GREEN | |
| LEGEND | L-3 | R4 | WHITE | E(M) |
| SYMBOLS | L-3 | R4 | VAR. | |
| BORDER | L-3 | R4 | WHITE | |
| SUBSTRATE | STRUCTURAL (SEE GEN. NOTES ON SH. 1) | | | |

BACKGROUND REFLECTIVE SHEETING

R2 REFER TO MISSOURI SPECIFICATION SECTION 1042.2.7.2
R4 REFER TO MISSOURI SPECIFICATION SECTION 1042.2.7.3

LEGEND, SYMBOLS & BORDER

L-3 DIRECT APPLIED (CUT FROM MATERIAL SHOWN ON PLANS.)


MISSOURI HIGHWAYS AND TRANSPORTATION COMMISSION
105 WEST CAPITOL
JEFFERSON CITY, MO 65102
1-888-ASK-MODOT (1-888-275-6636)


STATE OF MISSOURI
EILEEN H. RICKERS
NUMBER PE-28336
PROFESSIONAL ENGINEER
THIS SHEET HAS BEEN SIGNED, SEALED AND DATED ELECTRONICALLY.

# HIGHWAY SIGNING STRUCTURAL SIGNS

MISC. GOUND MOUNTED FREEWAY AND EXPRESSWAY GUIDE SIGNS

DATE EFFECTIVE: 02/01/2012
DATE PREPARED: 12/22/2011

903.02AL

SHEET NO. 4 OF 19

IF A SEAL IS PRESENT ON THIS SHEET IT HAS BEEN ELECTRONICALLY SEALED AND DATED.

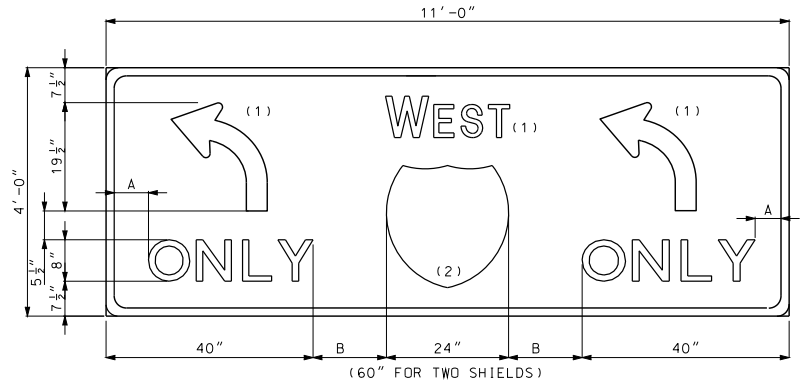


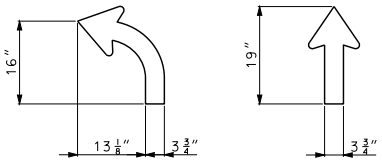


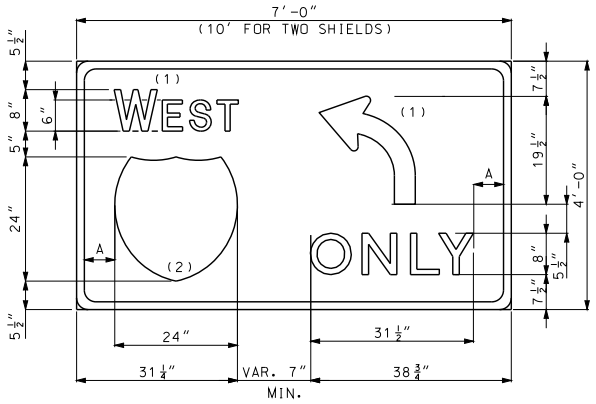


A = VARIABLE SO THAT THE OVERALL SIGN WIDTH IS IN 12″ INCREMENTS , MINIMUM 6″.

B = VARIABLE, MINIMUM 7″.

NOTES:

SHEILD SHALL APPEAR ON THE EXIT SIDE OF SIGN.

SIGN ALWAYS PLACED OVERHEAD. MOUNT ON BRIDGE WHEREVER POSSIBLE.

(1) ALL CARDINAL DIRECTIONS AND ARROWS HORIZONTALLY CENTERED IN SPACE PROVIDED.

(2) ALTERNATE ROUTE SHIELDS MAY BE PROVIDED. USE STANDARD 24″ OR 30″ SHIELD IN SPACE PROVIDED.

| BORDER (ALL SIGNS) | | | |
|---|---|---|---|
| CORNER RADII | | WIDTH | |
| SIGN HEIGHT | INCHES | LETTER SIZE | INCHES |
| LESS THAN OR EQUAL TO 6′ | 6 | LESS THAN 12″ | 1 |
| 7′ | 9 | | |
| GREATER THAN OR EQUAL TO 8′ | 12 | 12″ OR LARGER | 2 |

BACKGROUND REFLECTIVE SHEETING

R2 REFER TO MISSOURI SPECIFICATION SECTION 1042.2.7.2
R4 REFER TO MISSOURI SPECIFICATION SECTION 1042.2.7.3

| GENERAL SIGN DATA | | | | |
|---|---|---|---|---|
| STR2L-3 | TYPE | REFLECTIVE SHEETING TYPE | COLOR | LETTER SERIES |
| BACKGROUND | | R2 | GREEN | |
| LEGEND | L-3 | R4 | WHITE | E(M) |
| SYMBOLS | L-3 | R4 | VAR. | |
| BORDER | L-3 | R4 | WHITE | |
| SUBSTRATE | STRUCTURAL | | | |

LEGEND, SYMBOLS & BORDER

L-3 DIRECT APPLIED (CUT FROM MATERIAL SHOWN ON PLANS.)

IF A SEAL IS PRESENT ON THIS SHEET IT HAS BEEN ELECTRONICALLY SEALED AND DATED.

MISSOURI HIGHWAYS AND TRANSPORTATION COMMISSION
105 WEST CAPITOL
JEFFERSON CITY, MO 65102
1-888-ASK-MODOT (1-888-275-6636)

STATE OF MISSOURI
EILEEN H. RICKERS
NUMBER PE-28336
PROFESSIONAL ENGINEER
THIS SHEET HAS BEEN SIGNED, SEALED AND DATED ELECTRONICALLY.

# HIGHWAY SIGNING STRUCTURAL SIGNS
## LANE CONTROL WITH ROUTE SHIELD

DATE EFFECTIVE: 02/01/2012
DATE PREPARED: 12/22/2011

903.02AL

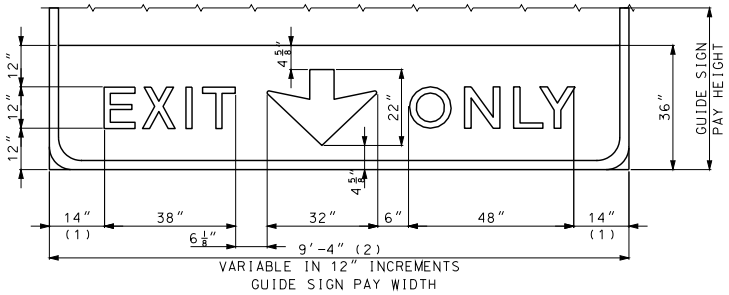


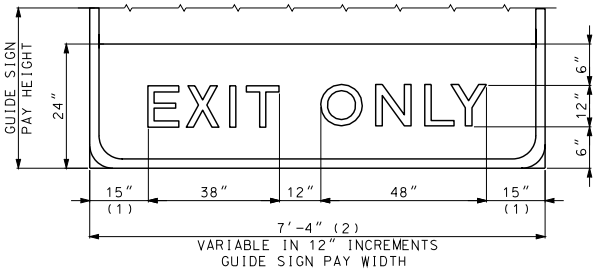


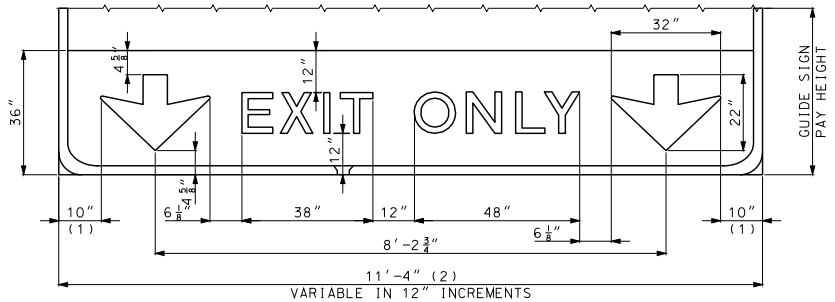


(1) TYPICALLY VARY THIS DISTANCE TO MATCH WIDTH OF GUIDE SIGN.

(2) MINIMUM GUIDE SIGN WIDTH WHEN EXIT ONLY PANEL IS CONTROL LINE FOR SIGN WIDTH.

| BORDER (ALL SIGNS) | | | |
|---|---|---|---|
| CORNER RADII | | WIDTH | |
| SIGN HEIGHT | INCHES | LETTER SIZE | INCHES |
| LESS THAN OR EQUAL TO 6' | 6 | LESS THAN 12" | 1 |
| 7' | 9 | | |
| GREATER THAN OR EQUAL TO 8' | 12 | 12" OR LARGER | 2 |

BACKGROUND REFLECTIVE SHEETING

R4 REFER TO MISSOURI SPECIFICATION SECTION 1042.2.7.3

| GENERAL SIGN DATA | | | | |
|---|---|---|---|---|
| STR4L-1 | TYPE | REFLECTIVE SHEETING TYPE | COLOR | LETTER SERIES |
| BACKGROUND | | R4 | FL. YL. | |
| LEGEND | L-1 | | BLACK | E (MOD) |
| SYMBOLS | L-1 | | BLACK | |
| BORDER | L-1 | | BLACK | |
| SUBSTRATE | STRUCTURAL | | | |

LEGEND, SYMBOLS AND BORDER

L-1 SCREEN PRINT, REVERSE SCREEN PRINT, OPAQUE OR TRANSLUCENT CUTABLE FILMS AS APPROVED BY ENGINEER BASED ON SIGN COLOR COMBINATION.

GENERAL NOTES:

NO DIRECT PAY MADE FOR THIS PANEL. COST FOR PANEL IS INCLUDED IN THE COST FOR THE GUIDE SIGN TO WHICH THIS PANEL IS ATTACHED.

FOR OVERHEAD USE ONLY.

PLACE SIGN ON TRUSS TO ALIGN CENTER OF LANE WITH TYPE C ARROW.

MISSOURI HIGHWAYS AND TRANSPORTATION COMMISSION
105 WEST CAPITOL
JEFFERSON CITY, MO 65102
1-888-ASK-MODOT (1-888-275-6636)

STATE OF MISSOURI
EILEEN H. RACKERS
NUMBER PE-28338
PROFESSIONAL ENGINEER
THIS SHEET HAS BEEN SIGNED, SEALED AND DATED ELECTRONICALLY.

# HIGHWAY SIGNING STRUCTURAL SIGNS

## EXIT ONLY PANELS

DATE EFFECTIVE: 02/01/2012
DATE PREPARED: 12/22/2011

903.02AL



IF A SEAL IS PRESENT ON THIS SHEET IT HAS BEEN ELECTRONICALLY SEALED AND DATED.

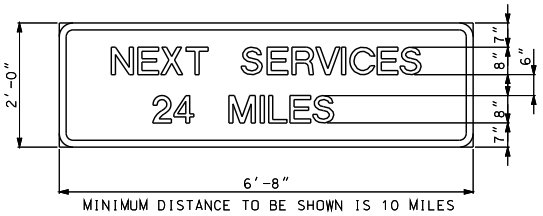


MINIMUM DISTANCE TO BE SHOWN IS 10 MILES

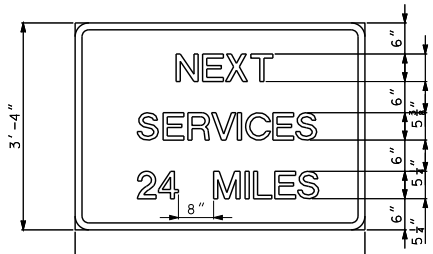


MINIMUM DISTANCE TO BE SHOWN IS 10 MILES

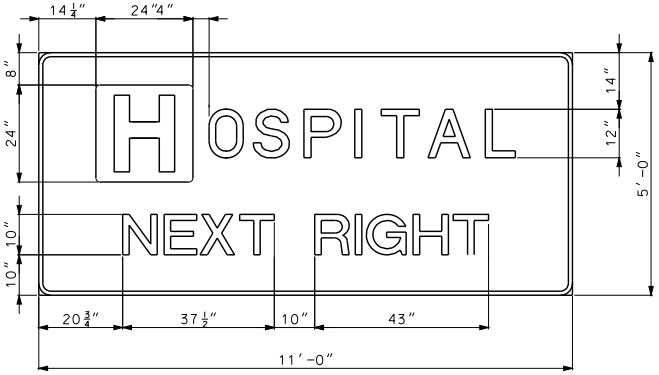


NOTE:
FOR THE LETTER "H" USE THE D9-2 SIGNFACE AS A DEMOUNTABLE SHIELD.

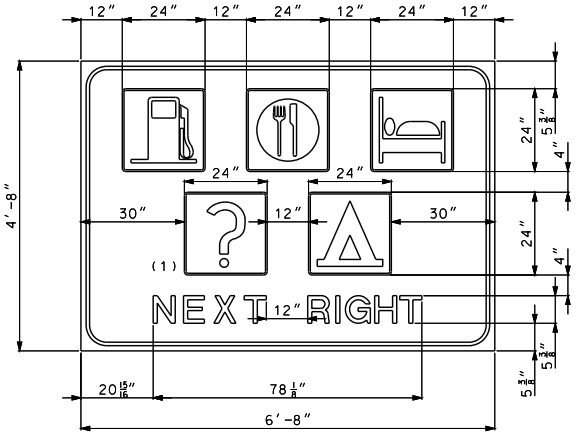


INTERSTATE - USE "EXIT XX"
FREEWAY - USE "NEXT RIGHT" "SECOND RIGHT"

(1) TO BE USED IN CONFORMANCE WITH MANUAL ON UNIFORM TRAFFIC CONTROL.

NOTE:
HORIZONTALLY CENTER ALL LINES OF TEXT AND SYMBOLS.

| BORDER (ALL SIGNS) | | | |
|---|---|---|---|
| CORNER RADII | | WIDTH | |
| SIGN HEIGHT | INCHES | LETTER SIZE | INCHES |
| LESS THAN OR EQUAL TO 6' | 6 | LESS THAN 12" | 1 |
| 7' | 9 | | |
| GREATER THAN OR EQUAL TO 8' | 12 | 12" OR LARGER | 2 |

BACKGROUND REFLECTIVE SHEETING

R2 REFER TO MISSOURI SPECIFICATION SECTION 1042.2.7.2
R4 REFER TO MISSOURI SPECIFICATION SECTION 1042.2.7.3

| GENERAL SIGN DATA | | | | |
|---|---|---|---|---|
| STR2L-3 | TYPE | REFLECTIVE SHEETING TYPE | COLOR | LETTER SERIES |
| BACKGROUND | | R2 | BLUE | |
| LEGEND | L-3 | R4 | WHITE | E(M) |
| SYMBOLS | L-3 | R4 | WHITE | |
| BORDER | L-3 | R4 | WHITE | |
| SUBSTRATE | STRUCTURAL | | | |

LEGEND, SYMBOLS & BORDER

L-3 DIRECT APPLIED (CUT FROM MATERIAL SHOWN ON PLANS.)

MISSOURI HIGHWAYS AND TRANSPORTATION COMMISSION
105 WEST CAPITOL
JEFFERSON CITY, MO 65102
1-888-ASK-MODOT (1-888-275-6636)

STATE OF MISSOURI
EILEEN H. RICKERS
NUMBER PE-28336
PROFESSIONAL ENGINEER
THIS SHEET HAS BEEN SIGNED, SEALED AND DATED ELECTRONICALLY.

# HIGHWAY SIGNING STRUCTURAL SIGNS

SERVICE SIGNS

DATE EFFECTIVE: 02/01/2012
DATE PREPARED: 12/22/2011

903.02AL

SHEET NO. 7 OF 19

IF A SEAL IS PRESENT ON THIS SHEET IT HAS BEEN ELECTRONICALLY SEALED AND DATED.

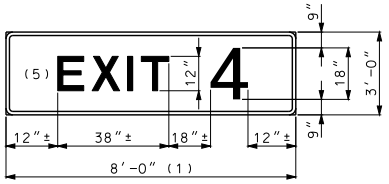


(1) 9'- 0" 2 THROUGH 9 WITH A LETTER
11'- 0" FOR "EXITS" 2 THROUGH 9 WITH A-B LETTERS

## 1 THROUGH 9

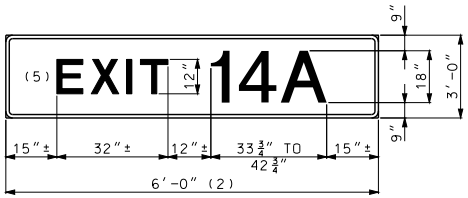


(2) 12'- 0" FOR "EXITS" 10 THROUGH 19
NUMERAL WITH A-B LETTERS

## 10 THROUGH 19 NUMERAL WITH LETTER

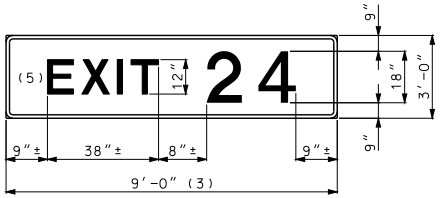


(3) 9'- 0" WITH NUMBER 1 NUMERAL
11'- 0" WITH A LETTER
10'- 0" WITH A NUMBER 1 NUMERAL AND A LETTER
12'- 0" FOR "EXITS" WITH A NUMBER 1 NUMERAL AND A-B LETTERS
13'- 0" FOR "EXITS" WITH DOUBLE NUMERAL AND A-B LETTERS

## 20 THROUGH 99

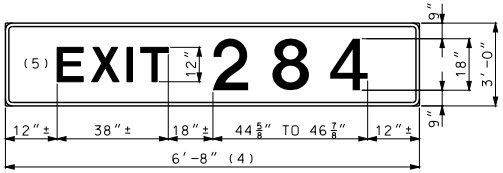


(4) 10'- 0" WITH NUMBER 1 NUMERAL
12'- 0" WITH A LETTER
12'- 0" WITH A NUMBER 1 NUMERAL AND A LETTER
13'- 0" FOR "EXITS" WITH A TRIPLE NUMERAL WITH A NUMBER 1 NUMERAL AND A-B LETTERS
14'- 0" FOR "EXITS" WITH A TRIPLE NUMERAL AND A-B LETTERS

## 100 AND OVER

GENERAL NOTES:

FOR MOUNTING DETAILS SEE OTHER DRAWINGS.

PANEL SHALL BE MOUNTED DIRECTLY TO THE TOP OF THE GUIDE SIGN AND ALIGNED WITH THE EXIT SIDE.

LEGEND, SYMBOLS & BORDER

L-3 DIRECT APPLIED (CUT FROM MATERIAL SHOWN ON PLANS.)

BACKGROUND REFLECTIVE SHEETING

R2 REFER TO MISSOURI SPECIFICATION SECTION 1042.2.7.2
R4 REFER TO MISSOURI SPECIFICATION SECTION 1042.2.7.3

| BORDER (ALL SIGNS) | | | |
|---|---|---|---|
| CORNER RADII | | WIDTH | |
| SIGN HEIGHT | INCHES | LETTER SIZE | INCHES |
| LESS THAN OR EQUAL TO 6' | 6 | LESS THAN 12" | 1 |
| 7' | 9 | | |
| GREATER THAN OR EQUAL TO 8' | 12 | 12" OR LARGER | 2 |

| GENERAL SIGN DATA | | | | | |
|---|---|---|---|---|---|
| | | REFL. SHEETING TYPE | | | LETTER |
| STR2L-3 | TYPE | GROUND | OVERHEAD | COLOR | SERIES |
| BACKGROUND | | R2 | R2 | GREEN | |
| LEGEND | L-3 | R4 | R4 | WHITE | E(M) |
| SYMBOLS | L-3 | R4 | R4 | VAR. | |
| BORDER | L-3 | R4 | R4 | WHITE | |
| SUBSTRATE | STRUCTURAL | | | | |

IF A SEAL IS PRESENT ON THIS SHEET IT HAS BEEN ELECTRONICALLY SEALED AND DATED.

MISSOURI HIGHWAYS AND TRANSPORTATION COMMISSION
105 WEST CAPITOL
JEFFERSON CITY, MO 65102
1-888-ASK-MODOT (1-888-275-6636)

STATE OF MISSOURI
EILEEN H. RICKERS
NUMBER PE-26336
PROFESSIONAL ENGINEER
THIS SHEET HAS BEEN SIGNED, SEALED AND DATED ELECTRONICALLY.

# HIGHWAY SIGNING

EXIT NUMBER PANELS

DATE EFFECTIVE: 02/01/2012
DATE PREPARED: 12/22/2011

903.02AL

SHEET NO. 8 OF 19

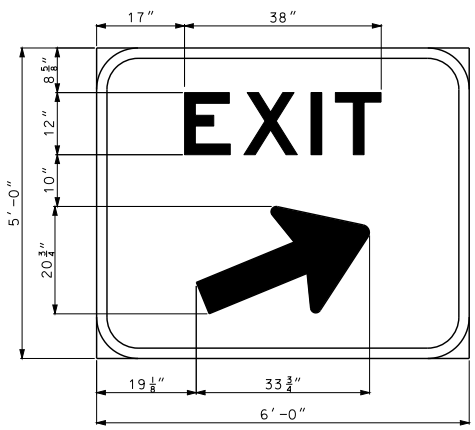


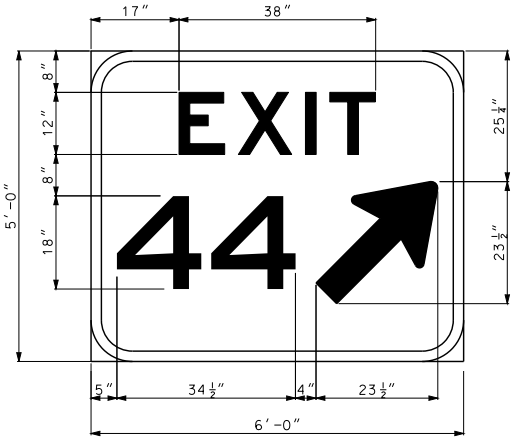


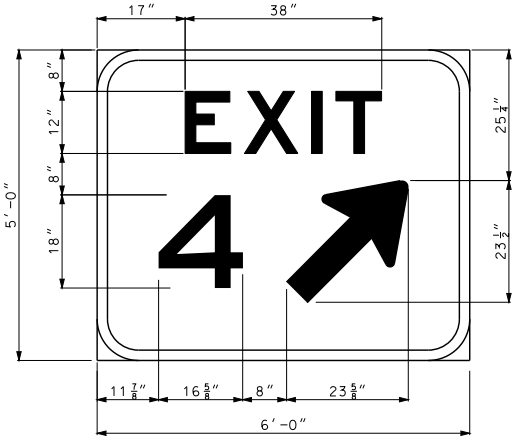


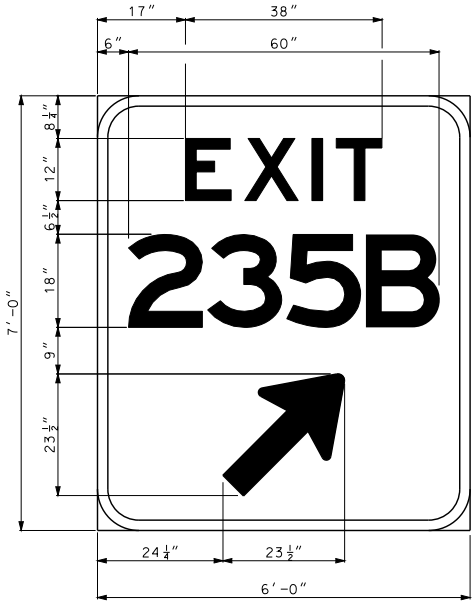


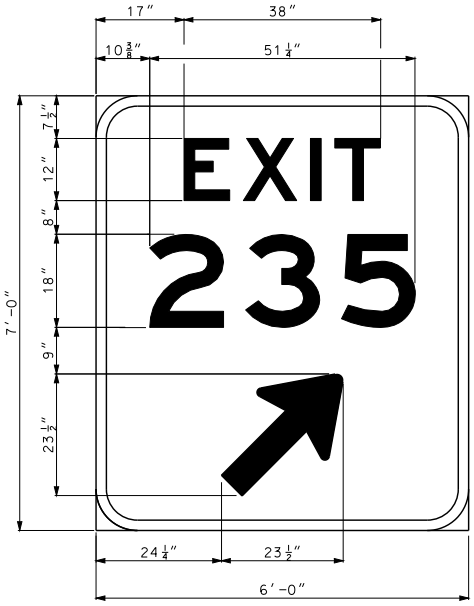


| BORDER (ALL SIGNS) | | | |
|---|---|---|---|
| CORNER RADII | | WIDTH | |
| SIGN HEIGHT | INCHES | LETTER SIZE | INCHES |
| LESS THAN OR EQUAL TO 6′ | 6 | LESS THAN 12″ | 1 |
| 7′ | 9 | | |
| GREATER THAN OR EQUAL TO 8′ | 12 | 12″ OR LARGER | 2 |

| GENERAL SIGN DATA | | | | | |
|---|---|---|---|---|---|
| | | REFL. SHEETING TYPE | | | |
| STR2L-3 | TYPE | GROUND | OVERHEAD | COLOR | LETTER SERIES |
| BACKGROUND | | R2 | R2 | GREEN | |
| LEGEND | L-3 | R4 | R4 | WHITE | E(M) |
| SYMBOLS | L-3 | R4 | R4 | VAR. | |
| BORDER | L-3 | R4 | R4 | WHITE | |
| SUBSTRATE | STRUCTURAL | | | | |

SUBSTRATE

ST STRUCTURAL
SH SHEET

BACKGROUND REFLECTIVE SHEETING

R2 REFER TO MISSOURI SPECIFICATION SECTION 1042.2.7.2
R4 REFER TO MISSOURI SPECIFICATION SECTION 1042.2.7.3

GENERAL NOTE:

FOR MOUNTING DETAILS, SEE OTHER DRAWINGS.

LEGEND, SYMBOLS & BORDER

L-1 SCREEN PRINT, REVERSE SCREEN PRINT, OR OPAQUE OR TRANSLUCENT CUTABLE FILMS AS APPROVED BY ENGINEER BASED SIGN COLOR COMBINATION.

L-3 DIRECT APPLIED (CUT FROM MATERIAL SHOWN ON PLANS.)

MISSOURI HIGHWAYS AND TRANSPORTATION COMMISSION
105 WEST CAPITOL
JEFFERSON CITY, MO 65102
1-888-ASK-MODOT (1-888-275-6636)

STATE OF MISSOURI
EILEEN H. RICKERS
NUMBER PE-28338
PROFESSIONAL ENGINEER
THIS SHEET HAS BEEN SIGNED, SEALED AND DATED ELECTRONICALLY.

# HIGHWAY SIGNING

GORE EXIT SIGN

DATE EFFECTIVE: 02/01/2012
DATE PREPARED: 12/22/2011

903.02AL

SHEET NO. 9 OF 19

IF A SEAL IS PRESENT ON THIS SHEET IT HAS BEEN ELECTRONICALLY SEALED AND DATED.

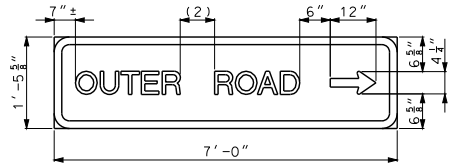


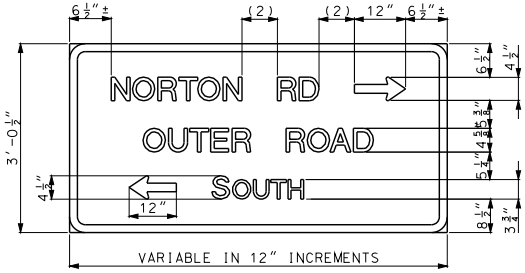

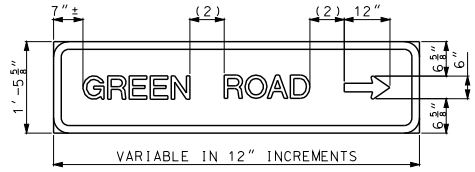

## MAST ARM STREETNAME SIGNS

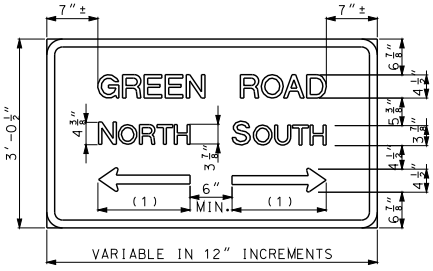


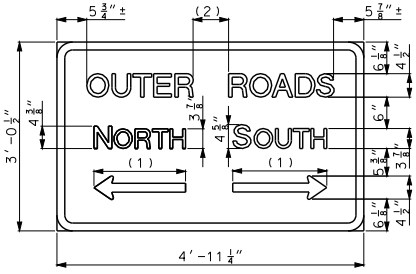


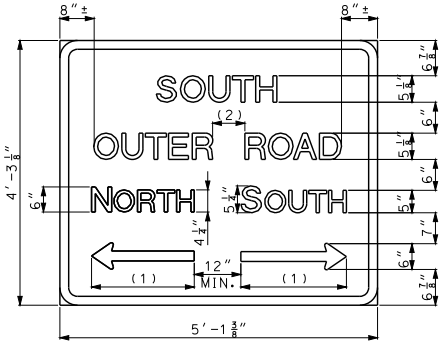


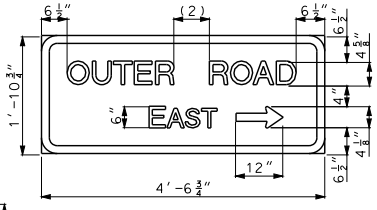


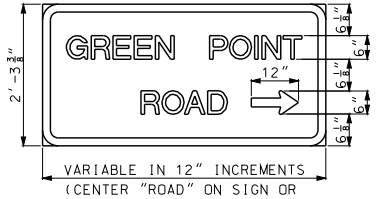


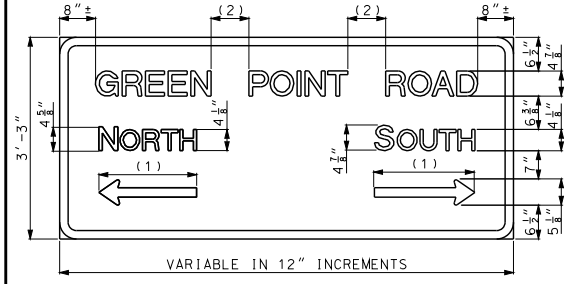


| BORDER (ALL SIGNS) | | | |
|---|---|---|---|
| CORNER RADII | | WIDTH | |
| SIGN HEIGHT | INCHES | LETTER SIZE | INCHES |
| LESS THAN OR EQUAL TO 6′ | 6 | LESS THAN 12″ | 1 |
| 7′ | 9 | | |
| GREATER THAN OR EQUAL TO 8′ | 12 | 12″ OR LARGER | 2 |

GENERAL NOTES:

SIGNS GREATER THAN 6′ WIDE OR 30 SQ. FT. IN AREA SHALL BE STRUCTURAL.

MAST ARM STREETNAME SIGNS SHALL BE FLAT SHEET.

FLAT SHEET FOR SIGNS SHALL BE THE FOLLOWING THICKNESS:

9 SQUARE FEET OR LESS – .080 IN..

OVER 9 SQUARE FEET BUT LESS THAN 16 SQUARE FEET – .100 IN..

16 SQUARE FEET OR LARGER – .125 IN.

FOR MOUNTING DETAILS, SEE OTHER DRAWINGS.

(1) ROUND ARROW LENGTH TO NEAREST 1″ INCREMENT.

(2) 1 TO 1.5 TIMES LETTER HEIGHT.

| GENERAL SIGN DATA | | | | |
|---|---|---|---|---|
| STR2L-3<br>SHR2L-3<br>SHR2L-1<br>STR2L-1 | TYPE | REFLECTIVE SHEETING TYPE | COLOR | LETTER SERIES |
| BACKGROUND | | R2 | GR/WHT | |
| LEGEND | L-1(3) | R4 | WHITE | D |
| SYMBOLS | L-1(3) | R4 | WHITE | |
| BORDER | L-1(3) | R4 | WHITE | |
| SUBSTRATE | SHEET (SEE GENERAL NOTES) | | | |

SUBSTRATE

ST STRUCTURAL
SH SHEET

LEGEND, SYMBOLS & BORDER

L-1 SCREEN PRINT, REVERSE SCREEN PRINT, OR OPAQUE OR TRANSLUCENT CUTABLE FILMS AS APPROVED BY ENGINEER BASED SIGN COLOR COMBINATION.

L-3 DIRECT APPLIED (CUT FROM MATERIAL SHOWN ON PLANS.)

BACKGROUND REFLECTIVE SHEETING

R2 REFER TO MISSOURI SPECIFICATION SECTION 1042.2.7.2
R4 REFER TO MISSOURI SPECIFICATION SECTION 1042.2.7.3

# CROSS ROAD AND OUTER ROAD SIGNS

MISSOURI HIGHWAYS AND TRANSPORTATION COMMISSION
105 WEST CAPITOL
JEFFERSON CITY, MO 65102
1-888-ASK-MODOT (1-888-275-6636)

STATE OF MISSOURI
ELSEN H. RICKERS
NUMBER PE-28338
PROFESSIONAL ENGINEER
THIS SHEET HAS BEEN SIGNED, SEALED AND DATED ELECTRONICALLY.

## HIGHWAY SIGNING

CROSS ROAD AND
OUTER ROAD SIGNS

DATE EFFECTIVE: 02/01/2012
DATE PREPARED: 12/22/2011

903.02AL

SHEET NO.
10 OF 19

IF A SEAL IS PRESENT ON THIS SHEET IT HAS BEEN ELECTRONICALLY SEALED AND DATED.

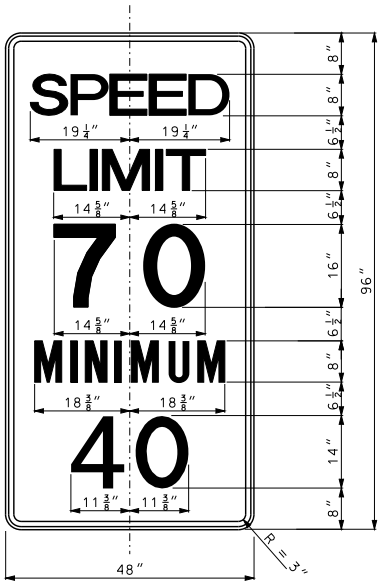


**R2-4a**

FOR USE ON INTERSTATE ONLY

| GENERAL SIGN DATA: R2-4a | | | | |
|---|---|---|---|---|
| SHR2L-1 | TYPE | REFLECTIVE SHEETING TYPE | COLOR | LETTER SERIES |
| BACKGROUND | | R2 | WHITE | |
| LEGEND | L-1 | | BLACK | C |
| SYMBOLS | L-1 | | BLACK | |
| BORDER | L-1 | | BLACK | |
| SUBSTRATE | SHEET | | | |

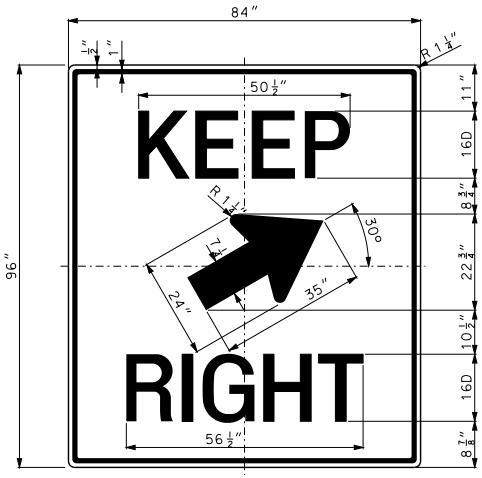


(3) SIGN R4-7d SHALL BE STRUCTURAL

**R4-7d**
**KEEP RIGHT**
(WITH 30° ARROW)
FREEWAY/EXPRESSWAY

| GENERAL SIGN DATA: R4-7b | | | | |
|---|---|---|---|---|
| STR2L-1 | TYPE | REFLECTIVE SHEETING TYPE | COLOR | LETTER SERIES |
| BACKGROUND | | R2 | WHITE | |
| LEGEND | L-1 | | BLACK | D |
| SYMBOLS | L-1 | | BLACK | |
| BORDER | L-1 | | BLACK | |
| SUBSTRATE | STRUCTURE | | | |

LEGEND, SYMBOLS & BORDER

L-1 SCREEN PRINT, REVERSE SCREEN PRINT, OR OPAQUE OR TRANSLUCENT CUTABLE FILMS AS APPROVED BY ENGINEER BASED ON SIGN COLOR COMBINATION.

L-3 DIRECT APPLIED (CUT FROM MATERIAL SHOWN ON PLANS.)

BACKGROUND REFLECTIVE SHEETING

R2 REFER TO MISSOURI SPECIFICATION SECTION 1042.2.7.2

GENERAL NOTES:

FLAT SHEET FOR SIGNS SHALL BE THE FOLLOWING THICKNESS (EXCEPT FOR 36" STOP SIGN THAT USES AN .100 ALUMINUM PLATE):

9 SQUARE FEET OR LESS - .080 IN.,

OVER 9 SQUARE FEET TO 16 SQUARE FEET - .100 IN.,

16 SQUARE FEET OR LARGER - .125 IN.

FOR MOUNTING DETAILS, SEE OTHER DRAWINGS.

MISSOURI HIGHWAYS AND TRANSPORTATION COMMISSION
105 WEST CAPITOL
JEFFERSON CITY, MO 65102
1-888-ASK-MODOT (1-888-275-6636)

STATE OF MISSOURI
EILEEN H. RICKERS
NUMBER PE-28338
PROFESSIONAL ENGINEER
THIS SHEET HAS BEEN SIGNED, SEALED AND DATED ELECTRONICALLY.

# HIGHWAY SIGNING

REGULATORY SIGNS

DATE EFFECTIVE: 02/01/2012
DATE PREPARED: 12/22/2011

903.02AL

SHEET NO. 11 OF 19

IF A SEAL IS PRESENT ON THIS SHEET IT HAS BEEN ELECTRONICALLY SEALED AND DATED.

| GENERAL SIGN DATA; FLAT SHEET | | | |
|---|---|---|---|
| SHR4L-1 | TYPE | REFLECTIVE SHEETING TYPE | COLOR |
| BACKGROUND | | R4 | FL. YL |
| LEGEND | L-1 | | BLACK |
| SYMBOLS | L-1 | | BLACK |
| BORDER | L-1 | | BLACK |

| GENERAL SIGN DATA; STRUCTURE | | | |
|---|---|---|---|
| STR4L-1 | TYPE | REFLECTIVE SHEETING TYPE | COLOR |
| BACKGROUND | | R4 | FL. YL |
| LEGEND | L-1 | | BLACK |
| SYMBOLS | L-1 | | BLACK |
| BORDER | L-1 | | BLACK |

LEGEND, SYMBOLS & BORDER

L-1 SCREEN PRINT, REVERSE SCREEN PRINT, OR OPAQUE OR TRANSLUCENT CUTABLE FILMS AS APPROVED BY ENGINEER BASED ON SIGN COLOR COMBINATION.

L-3 DIRECT APPLIED (CUT FROM MATERIAL SHOWN ON PLANS.)

BACKGROUND REFLECTIVE SHEETING

R4 REFER TO MISSOURI SPECIFICATION SECTION 1042.2.7

SUBSTRATE

SH FLAT SHEET

ST EXTRUDED PANEL

GENERAL NOTES:

FLAT SHEET FOR SIGNS SHALL BE THE FOLLOWING THICKNESS

9 SQUARE FEET OR LESS - .080 IN..

OVER 9 SQUARE FEET TO 16 SQUARE FEET - .100 IN..

16 SQUARE FEET OR LARGER - .125 IN.

FOR MOUNTING DETAILS, SEE OTHER DRAWINGS.

MISSOURI HIGHWAYS AND TRANSPORTATION COMMISSION
105 WEST CAPITOL
JEFFERSON CITY, MO 65102
1-888-ASK-MODOT (1-888-275-6636)

STATE OF MISSOURI
EILEEN H. RICKERS
NUMBER PE-28336
PROFESSIONAL ENGINEER
THIS SHEET HAS BEEN SIGNED, SEALED AND DATED ELECTRONICALLY.

# HIGHWAY SIGNING

WARNING SIGNS

DATE EFFECTIVE: 02/01/2011
DATE PREPARED: 12/22/2011

903.02AL

SHEET NO. 12 OF 19

IF A SEAL IS PRESENT ON THIS SHEET IT HAS BEEN ELECTRONICALLY SEALED AND DATED.

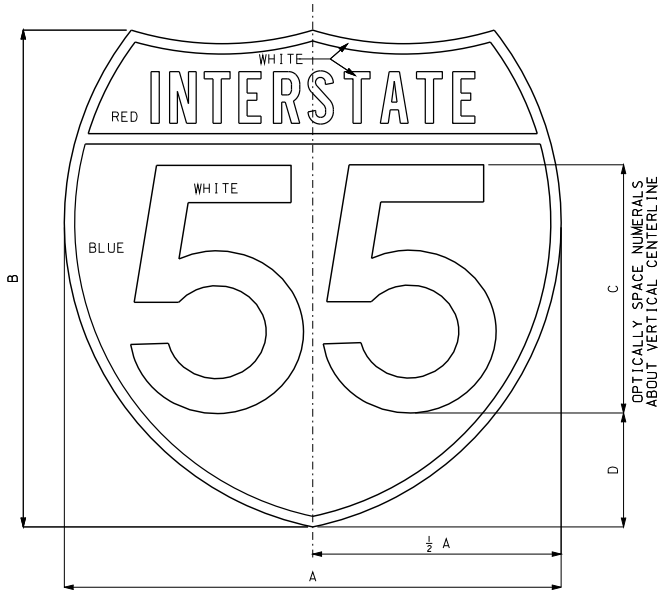


FOR GUIDE SIGN USE

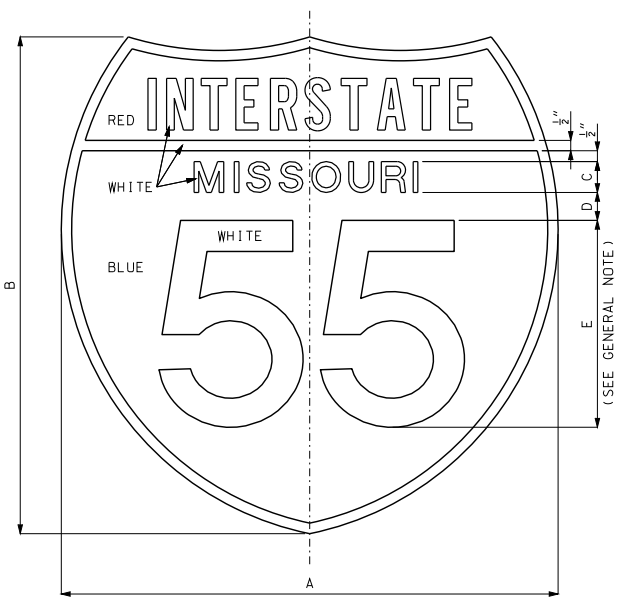


FOR INDEPENDENT USE

## INTERSTATE SHIELD

| LOCATION | SIGN | DIMENSIONS (INCHES) | | | |
|---|---|---|---|---|---|
| | | A | B | C | D |
| CROSSROAD | 1,2-DIGITS | 24 | 24 | 12D | 5½ |
| OVERHEAD | 1,2-DIGITS | 36 | 36 | 18D | 8¼ |
| GROUND MOUNT | 1,2-DIGITS | 48 | 48 | 24D | 11 |
| CROSSROAD | 3-DIGITS | 30 | 24 | 12D | 5½ |
| OVERHEAD | 3-DIGITS | 45 | 36 | 18D | 8¼ |
| GROUND MOUNT | 3-DIGITS | 60 | 48 | 24D | 11 |

DIMENSIONS FOR GUIDE SIGN, BUSINESS LOOP OR SPUR SHIELDS

| GUIDE SIGN | | | | |
|---|---|---|---|---|
| GENERAL SIGN DATA | | | | |
| | TYPE | REFLECTIVE SHEETING TYPE | COLOR | LETTER SERIES |
| BACKGROUND | L-1 | R4 | VAR. | |
| LEGEND | L-1 * | | WHITE | VAR ** |
| SYMBOLS | | | | |
| BORDER | L-1 * | | WHITE | |
| SUBSTRATE | | | | |

* REVERSE SCREEN PROCESS.
** SEE DIMENSION TABLES THIS DRAWING.

| SIGN | DIMENSIONS (INCHES) | | | | |
|---|---|---|---|---|---|
| | A | B | C | D | E |
| 1 & 2 DIGITS | 24 | 24 | 1½ D | 1⅜ | 10D |
| 3 DIGITS | 30 | 24 | 1½ D | 2¼ | 10D |

DIMENSIONS FOR INDEPENDENT USE SHIELD

| INDEPENDENT | | | | |
|---|---|---|---|---|
| GENERAL SIGN DATA | | | | |
| SHR2L-1 | TYPE | REFLECTIVE SHEETING TYPE | COLOR | LETTER SERIES |
| BACKGROUND | L-1 | R2 | VAR. | |
| LEGEND | L-1 * | | WHITE | VAR ** |
| SYMBOLS | | | | |
| BORDER | L-1 * | | WHITE | |
| SUBSTRATE | SHEET | | | |

* REVERSE SCREEN PROCESS.
** SEE DIMENSION TABLES THIS DRAWING.

LEGEND, SYMBOLS & BORDER

L-1 SCREEN PRINT, REVERSE SCREEN PRINT, OR OPAQUE OR TRANSLUCENT CUTABLE FILMS AS APPROVED BY ENGINEER BASED ON SIGN COLOR COMBINATION.

SUBSTRATE

ST STRUCTURAL
SH SHEET

BACKGROUND REFLECTIVE SHEETING

R2 REFER TO MISSOURI SPECIFICATION SECTION 1042.2.7.2
R4 REFER TO MISSOURI SPECIFICATION SECTION 1042.2.7.3

GENERAL NOTES:

ALL SHIELDS FOR GUIDE SIGN USE SHALL BE SCREEN PROCESS OR ELECTRONIC CUTABLE FILM ON REFLECTIVE SHEETING IN ACCORDANCE WITH SEC 1042.2.7.3.

FOR HOLE PUNCHING AND MOUNTING DETAILS SEE OTHER DRAWINGS.

OCCASSIONALLY THE NUMERALS CANNOT BE ACCOMODATED WITHIN THE SPACE AVAILABLE ON THE STANDARD SHIELD. FOR THESE SITUATIONS, THE STANDARD SERIES D NUMERAL MAY BE REDUCED TO SERIES C, OR HORIZONTALLY COMPRESSED
BY MEANS OF SIGNING SOFTWARE AS DIRECTED BY THE ENGINEER.

ALL SIGNS ON THIS SHEET ARE TO BE FABRICATED FROM .080 IN. SHEET ALUMINUM, UNLESS OTHERWISE SHOWN.


MoDOT
MISSOURI HIGHWAYS AND TRANSPORTATION COMMISSION
105 WEST CAPITOL
JEFFERSON CITY, MO 65102
1-888-ASK-MODOT (1-888-275-6636)


STATE OF MISSOURI
ELEEN H. RACKERS
NUMBER PE-28336
PROFESSIONAL ENGINEER
THIS SHEET HAS BEEN SIGNED, SEALED AND DATED ELECTRONICALLY.

# HIGHWAY SIGNING

SHIELD FOR INDEPENDENT AND GUIDE SIGN USE

DATE EFFECTIVE: 02/01/2012
DATE PREPARED: 12/22/2011

903.02AL




IF A SEAL IS PRESENT ON THIS SHEET IT HAS BEEN ELECTRONICALLY SEALED AND DATED.

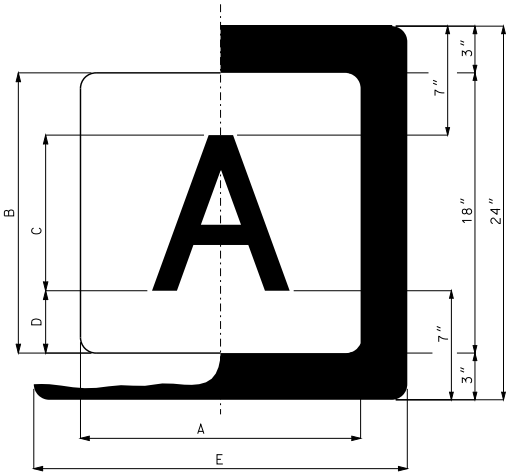


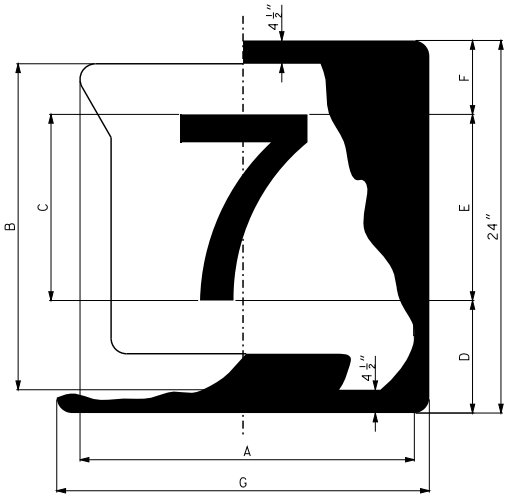


| GUIDE SIGN | | | |
|---|---|---|---|
| GENERAL SIGN DATA | | | |
| | COLOR | REFLECTIVE SHEETING TYPE | LETTER SERIES |
| BACKGROUND | WHITE | R4 | |
| LEGEND | BLACK | | VAR ✳ |
| SYMBOLS | WHITE | | |

| INDEPENDENT | | | |
|---|---|---|---|
| GENERAL SIGN DATA | | | |
| SHR2L-1 | COLOR | REFLECTIVE SHEETING TYPE | LETTER SERIES |
| BACKGROUND | WHITE | R2 | |
| LEGEND | BLACK | | VAR ✳ |
| SYMBOLS | WHITE | | |
| BORDER | BLACK | | |
| SUBSTRATE | SHEET | | |

✳ SEE DIMENSION TABLES THIS DRAWING.

SUBSTRATE

ST STRUCTURAL
SH SHEET

LEGEND, SYMBOLS & BORDER

L-1 SCREEN PRINT, REVERSE SCREEN PRINT, OR OPAQUE OR TRANSLUCENT CUTABLE FILMS AS APPROVED BY ENGINEER BASED ON SIGN COLOR COMBINATION.

BACKGROUND REFLECTIVE SHEETING

R2 REFER TO MISSOURI SPECIFICATION SECTION 1042.2.7.2
R4 REFER TO MISSOURI SPECIFICATION SECTION 1042.2.7.3

| LOCATION | NO. OF LETTERS | DIMENSIONS (INCHES) FOR GUIDE SIGN USE | | | |
|---|---|---|---|---|---|
| | | A | B | C | D |
| CROSSROAD | 1 | 24 | 24 | 12D | 6 |
| CROSSROAD | 2 | 30 | 24 | 12D | 6 |
| OVERHEAD | 1 | 30 | 30 | 18D | 6 |
| OVERHEAD | 2 | 36 | 30 | 18D | 6 |
| GROUND MOUNT | 1 | 42 | 42 | 24D | 9 |
| GROUND MOUNT | 2 | 48 | 42 | 24D | 9 |

| NUMBER OF LETTERS | DIMENSIONS (INCHES) FOR INDEPENDENT USE | |
|---|---|---|
| | C | E |
| 1 | 12D | 24 |
| 2 | 12C | 30 |

## SUPPLEMENTARY SHIELD

| LOCATION | ROUTE NUMBER | DIMENSIONS (INCHES) FOR GUIDE SIGN USE | | |
|---|---|---|---|---|
| | | A | B | C |
| CROSSROAD | 1 & 2 DIGITS | 24 | 24 | 12D |
| OVERHEAD | 1 & 2 DIGITS | 36 | 36 | 18C |
| GROUND MOUNT | 1 & 2 DIGITS | 48 | 48 | 24D |
| CROSSROAD | 3 DIGITS | 30 | 24 | 12C |
| OVERHEAD | 3 DIGITS | 45 | 36 | 18D |
| GROUND MOUNT | 3 DIGITS | 60 | 48 | 24D |

| ROUTE NUMBER | DIMENSIONS (INCHES) FOR INDEPENDENT USE | | | |
|---|---|---|---|---|
| | D | E | F | G |
| 1 & 2 DIGIT | 7¼ | 12D | 4¾ | 24 |
| 3 DIGIT | 8¼ | 12 B OR C | 5¾ | 30 |

## STATE ROUTE SHIELD

GENERAL NOTES:

ALL SHIELDS FOR GUIDE SIGN USE SHALL BE SCREEN PROCESS OR CUTTABLE FILM ON REFLECTIVE SHEETING IN ACCORDANCE WITH SEC 1042.2.7.3.

ALL SHIELDS FOR INDEPENDENT SIGN USE SHALL BE SCREEN PROCESS OR CUTTABLE FILM ON REFLECTIVE SHEETING IN ACCORDANCE WITH SEC 1042.2.7.2.

FOR HOLE PUNCHING AND MOUNTING DETAILS SEE OTHER DRAWINGS.

LAYOUT OF MISSOURI SHIELDS ARE AVAILABLE UPON REQUEST.

OCCASIONALLY THE NUMERALS CANNOT BE ACCOMMODATED WITHIN THE SPACE AVAILABLE ON THE STANDARD SHIELD. FOR THESE SITUATIONS, THE STANDARD SERIES D NUMERAL MAY BE REDUCED TO SERIES C, OR HORIZONTALLY COMPRESSED BY MEANS OF SIGNING SOFTWARE AS DIRECTED BY THE ENGINEER.

ALL SIGNS ON THIS SHEET ARE TO BE FABRICATED FROM .080 IN. SHEET ALUMINUM, UNLESS OTHERWISE SHOWN.

MISSOURI HIGHWAYS AND TRANSPORTATION COMMISSION
105 WEST CAPITOL
JEFFERSON CITY, MO 65102
1-888-ASK-MODOT (1-888-275-6636)

STATE OF MISSOURI
EILEEN H. RACKERS
NUMBER PE-28338
PROFESSIONAL ENGINEER
THIS SHEET HAS BEEN SIGNED, SEALED AND DATED ELECTRONICALLY.

# HIGHWAY SIGNING
## STANDARD SHIELDS FOR INDEPENDENT AND GUIDE SIGN USE

DATE EFFECTIVE: 02/01/2012
DATE PREPARED: 12/22/2011

903.02AL

SHEET NO. 14 OF 19

IF A SEAL IS PRESENT ON THIS SHEET IT HAS BEEN ELECTRONICALLY SEALED AND DATED.

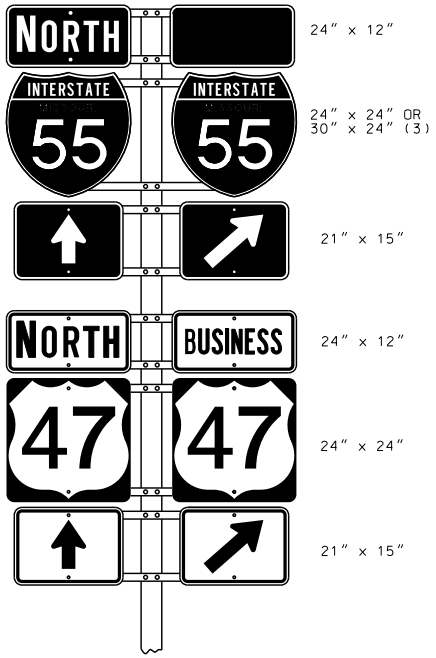


TWO-ROUTE ASSEMBLY

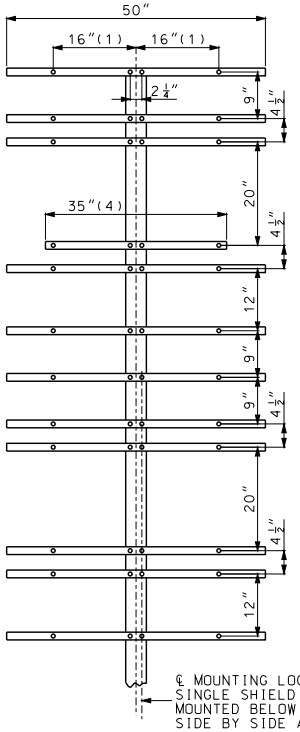


℄ MOUNTING LOCATION FOR
SINGLE SHIELD ASSEMBLY
MOUNTED BELOW (OR ABOVE)
SIDE BY SIDE ASSEMBLIES

(1) FOR 30" x 24" SHIELD, DIMENSION WILL BE 22".
(2) FULL SIZE BARS SHALL BE USED WHEN INTERSTATE SHIELD IS NOT USED. VERTICAL SPACING OF BARS SHALL BE THE SAME AS FOR A SINGLE POST ASSEMBLY.
(3) 24" x 24" SHALL BE USED FOR 1 OR 2 DIGIT ROUTE SHIELDS.
(4) FOR SIDE BY SIDE 30" x 24" SHIELDS, DIMENSION WILL BE 41".

NOTE: 1ST DIMENSION - WIDTH OF PLATE
2ND DIMENSION - HEIGHT OF PLATE

ONE POST
(WITH BARS)

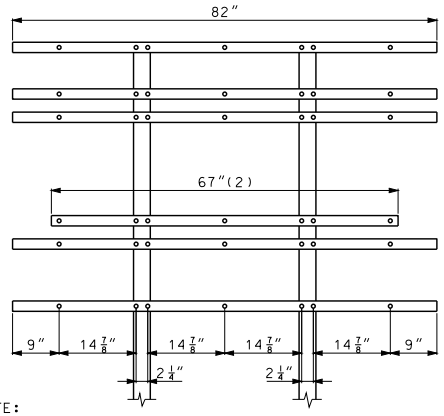


NOTE:
ASSEMBLIES WITH TWO-ROUTE SHIELDS MOUNTED BELOW THREE-ROUTE SHIELDS SHALL BE MOUNTED TO THE POST AS SHOWN IN ONE-POST WITH BARS, DRAWING ABOVE.

TWO POSTS

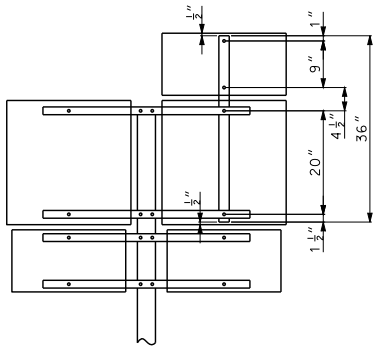


AUXILIARY PLATE MOUNTING

WIDE FLANGE POST MOUNTING

GENERAL NOTES:

ALL BARS SHALL BE 2"x 3/8" STEEL, GALVANIZED AFTER PUNCHING.
WEIGHT = 2.55 LBS. PER FOOT. HOLES IN BARS SHALL BE 3/4" AND SHALL BE PUNCHED AS SHOWN ON THIS DRAWING.
BACKING BARS PAID FOR AS STRUCTURAL STEEL, PER POUND.

FOR POST AND FOOTING DATA AND DETAILS OF SHIELDS AND PLAQUES, SEE OTHER DRAWINGS.

MISSOURI HIGHWAYS AND TRANSPORTATION COMMISSION
105 WEST CAPITOL
JEFFERSON CITY, MO 65102
1-888-ASK-MODOT (1-888-275-6636)

STATE OF MISSOURI
EILEEN H. RICKERS
NUMBER PE-28338
PROFESSIONAL ENGINEER
THIS SHEET HAS BEEN SIGNED, SEALED AND DATED ELECTRONICALLY.

# HIGHWAY SIGNING
BACKING BARS
SHEET SIGN MOUNTING
ROUTE SHIELD AND
MARKER ASSEMBLIES

DATE EFFECTIVE: 02/01/2012
DATE PREPARED: 12/22/2011

903.02AL

SHEET NO.
15 OF 19

IF A SEAL IS PRESENT ON THIS SHEET IT HAS BEEN ELECTRONICALLY SEALED AND DATED.

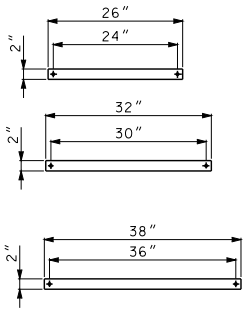


THE THREE BACKING BAR LAYOUTS
FOR SINGLE POST SIGNS

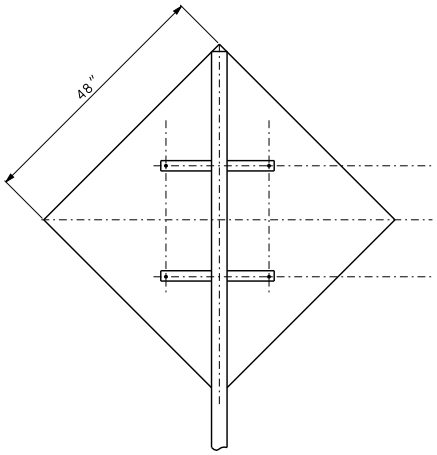


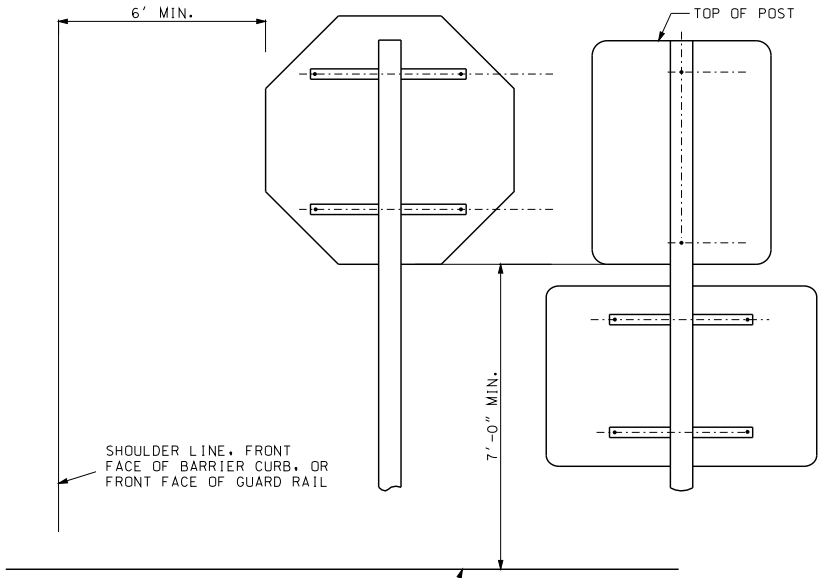


HOLES IN BACKING BARS SHALL BE $\frac{9}{16}$″ AND PUNCHED AS SHOWN ON THIS DRAWING.

IF A SEAL IS PRESENT ON THIS SHEET IT HAS BEEN ELECTRONICALLY SEALED AND DATED.

MISSOURI HIGHWAYS AND TRANSPORTATION COMMISSION
105 WEST CAPITOL
JEFFERSON CITY, MO 65102
1-888-ASK-MODOT (1-888-275-6636)

STATE OF MISSOURI
EILEEN H. RICKERS
NUMBER PE-28336
PROFESSIONAL ENGINEER
THIS SHEET HAS BEEN SIGNED, SEALED AND DATED ELECTRONICALLY.

# HIGHWAY SIGNING

## BACKING BARS DETAILS

DATE EFFECTIVE: 02/01/2012
DATE PREPARED: 12/22/2011

903.02AL

SHEET NO.
16 OF 19

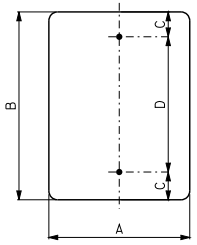


| DIMENSIONS (IN.) | | | |
|---|---|---|---|
| A | B | C | D |
| 6 | 15 | 1.5 | 12 |
| 8 | 24 | 3 | 18 |
| 9 | 12 | 1.5 | 9 |
| 9 | 48 | 3 | 42 |
| 10 | 30 | 3 | 24 |
| 12 | 18 | 3 | 12 |
| 12 | 24 | 3 | 18 |
| 12 | 36 | 3 | 30 |
| 12 | 48 | 3 | 42 |
| 18 | 24 | 3 | 18 |
| 24 | 30 | 3 | 24 |
| 24 | 36 | 3 | 30 |
| 30 | 36 | 3 | 30 |
| 30 | 42 | 3 | 36 |
| 30 | 48 | 3 | 42 |

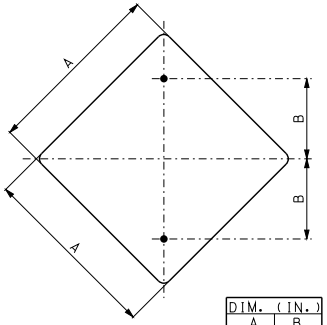


| DIM. (IN.) | |
|---|---|
| A | B |
| 18 | 9 |
| 24 | 12 |
| 30 | 15 |
| 36 | 18 |

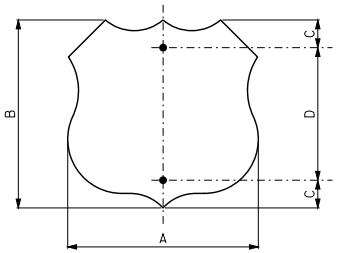


| DIMENSIONS (IN.) | | | |
|---|---|---|---|
| A | B | C | D |
| 24 | 24 | 3 | 18 |
| 30 | 24 | 3 | 18 |
| 36 | 36 | 6 | 24 |
| 45 | 36 | 6 | 24 |

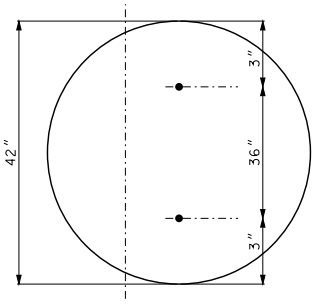


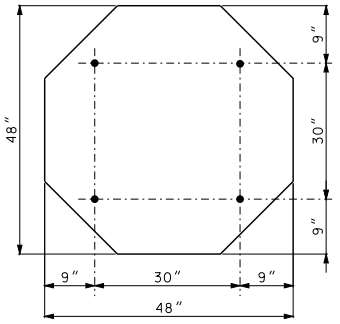


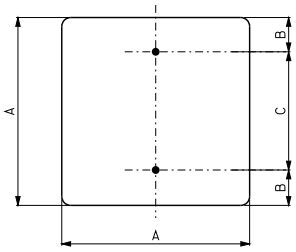


| DIMENSIONS (IN.) | | |
|---|---|---|
| A | B | C |
| 14 | 3 | 8 |
| 18 | 3 | 12 |
| 24 | 3 | 18 |
| 30 | 3 | 24 |

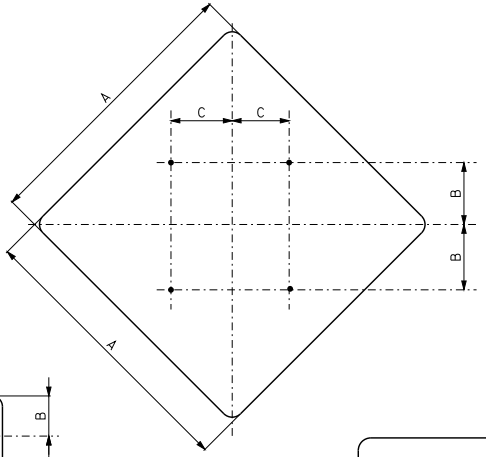


| DIMENSIONS (IN.) | | |
|---|---|---|
| A | B | C |
| 48 | 15 | 15 |
| 60 | 18 | 18 |

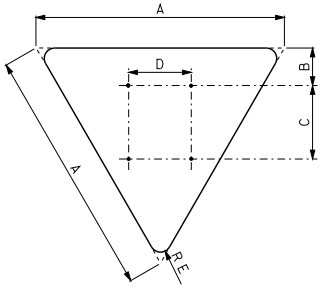


| DIMENSIONS (IN.) | | | | |
|---|---|---|---|---|
| A | B | C | D | E |
| 48 | 3 | 12 | 12 | 3 |
| 60 | 4 | 18 | 15 | 3 |

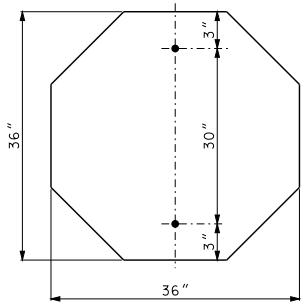


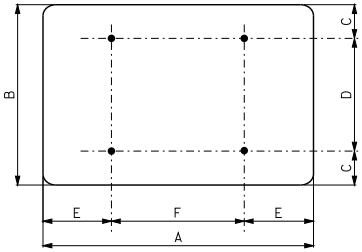


| DIMENSIONS (IN.) | | | | | |
|---|---|---|---|---|---|
| A | B | C | D | E | F |
| 36 | 24 | 3 | 18 | 6 | 24 |
| 36 | 30 | 3 | 24 | 6 | 24 |
| 42 | 30 | 3 | 24 | 6 | 30 |
| 42 | 36 | 3 | 30 | 6 | 30 |
| 48 | 12 | 1.5 | 9 | 9 | 30 |
| 48 | 18 | 1.5 | 15 | 9 | 30 |
| 48 | 24 | 3 | 18 | 9 | 30 |
| 48 | 30 | 3 | 24 | 9 | 30 |
| 48 | 36 | 3 | 30 | 9 | 30 |
| 60 | 12 | 1.5 | 9 | 12 | 36 |
| 60 | 24 | 3 | 18 | 12 | 36 |
| 60 | 36 | 6 | 24 | 12 | 36 |

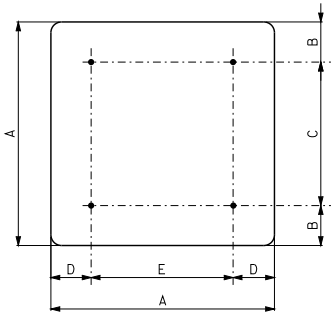


| DIMENSIONS (IN.) | | | | |
|---|---|---|---|---|
| A | B | C | D | E |
| 36 | 6 | 24 | 6 | 24 |
| 48 | 6 | 36 | 9 | 30 |

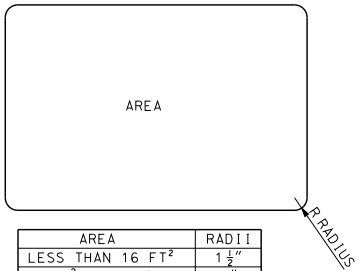


| AREA | RADII |
|---|---|
| LESS THAN 16 FT² | 1½″ |
| 16 FT² OR GREATER | 3″ |

## RADII FOR SHEET SIGNS

GENERAL NOTES:

SIGNS WITH FOUR OR MORE HOLES REQUIRE BACKING BARS OR MULTIPLE POSTS.

HOLES IN SIGNS SHALL BE $\frac{3}{8}$″ AND PUNCHED AS SHOWN ON THIS DRAWING.

FLAT SHEET FOR SIGNS SHALL BE THE FOLLOWING THICKNESS:

9 SQUARE FEET OR LESS – .080 IN.,

OVER 9 SQUARE FEET BUT LESS THAN 16 SQUARE FEET – .100 IN.,

16 SQUARE FEET OR LARGER – .125 IN.

FOR MOUNTING DETAILS, SEE OTHER DRAWINGS.

MISSOURI HIGHWAYS AND TRANSPORTATION COMMISSION
105 WEST CAPITOL
JEFFERSON CITY, MO 65102
1-888-ASK-MODOT (1-888-275-6636)

STATE OF MISSOURI
EILEEN H. RACKERS
NUMBER PE-28338
PROFESSIONAL ENGINEER
THIS SHEET HAS BEEN SIGNED, SEALED AND DATED ELECTRONICALLY.

# HIGHWAY SIGNING

## HOLE PUNCHING

DATE EFFECTIVE: 02/01/2012
DATE PREPARED: 12/22/2011

903.02AL

SHEET NO. 17 OF 19

IF A SEAL IS PRESENT ON THIS SHEET IT HAS BEEN ELECTRONICALLY SEALED AND DATED.

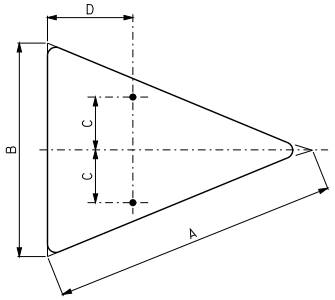


| DIMENSIONS (IN.) | | | |
|---|---|---|---|
| A | B | C | D |
| 40 | 30 | 7.5 | 12 |
| 48 | 36 | 9 | 15 |

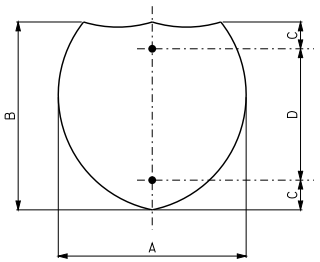


| DIMENSIONS (IN.) | | | |
|---|---|---|---|
| A | B | C | D |
| 24 | 24 | 3 | 18 |
| 30 | 24 | 3 | 18 |
| 36 | 36 | 6 | 24 |
| 45 | 36 | 6 | 24 |

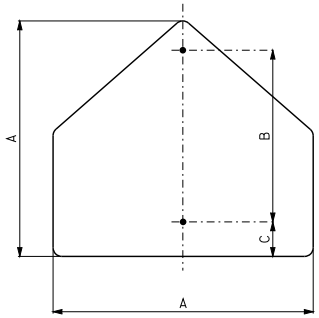


| DIMENSIONS (IN.) | | |
|---|---|---|
| A | B | C |
| 36 | 24 | 3 |

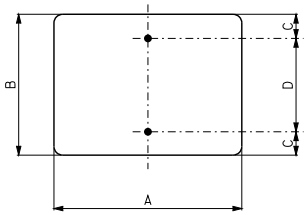


| DIMENSIONS (IN.) | | | |
|---|---|---|---|
| A | B | C | D |
| 5 | 9 | 1.5 | 6 |
| 12 | 9 | 1.5 | 6 |
| 14 | 12 | 1.5 | 9 |
| 18 | 12 | 1.5 | 9 |
| 20 | 9 | 1.5 | 6 |
| 21 | 15 | 1.5 | 12 |
| 24 | 6 | 1.5 | 3 |
| 24 | 8 | 1.5 | 5 |
| 24 | 10 | 1.5 | 7 |
| 24 | 12 | 1.5 | 9 |
| 24 | 18 | 3 | 12 |
| 30 | 6 | 1.5 | 3 |
| 30 | 12 | 1.5 | 9 |
| 30 | 15 | 1.5 | 12 |
| 30 | 18 | 3 | 12 |
| 30 | 24 | 3 | 18 |
| 36 | 12 | 1.5 | 9 |
| 36 | 18 | 3 | 12 |

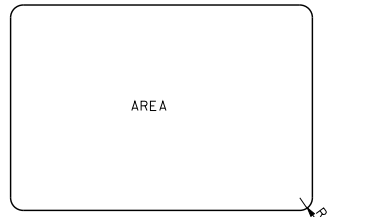


| AREA | RADII |
|---|---|
| LESS THAN 16 FT$^2$ | 1 1/2" |
| 16 FT$^2$ OR GREATER | 3" |

## RADII FOR SHEET SIGNS

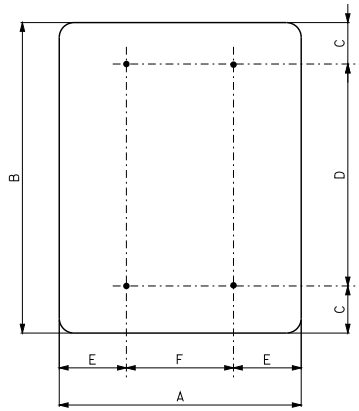


| DIMENSIONS (IN.) | | | | | |
|---|---|---|---|---|---|
| A | B | C | D | E | F |
| 36 | 48 | 6 | 36 | 6 | 24 |
| 36 | 54 | 6 | 42 | 6 | 24 |
| 48 | 60 | 6 | 48 | 9 | 30 |

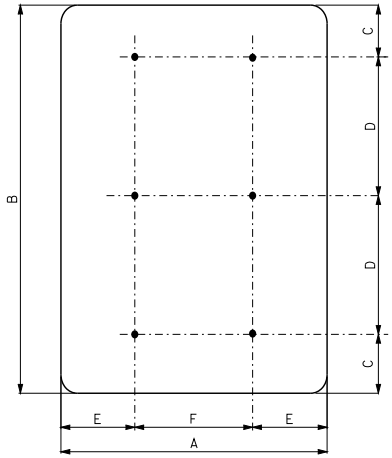


| DIMENSIONS (IN.) | | | | | |
|---|---|---|---|---|---|
| A | B | C | D | E | F |
| 48 | 96 | 6 | 42 | 9 | 30 |

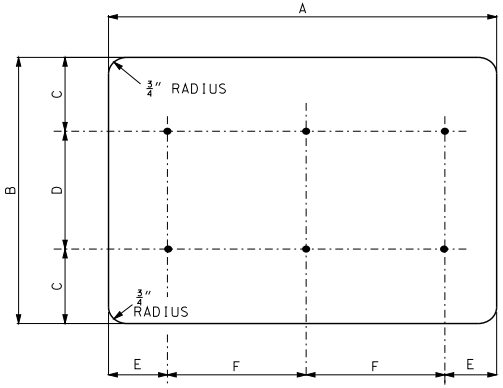


| DIMENSIONS (IN.) | | | | | |
|---|---|---|---|---|---|
| A | B | C | D | E | F |
| 96 | 48 | 6 | 36 | 16 | 32 |

GENERAL NOTES:

FLAT SHEET FOR SIGNS SHALL BE THE FOLLOWING THICKNESS:

9 SQUARE FEET OR LESS - .080 IN.,

OVER 9 SQUARE FEET BUT LESS THAN 16 SQUARE FEET - .100 IN.,

16 SQUARE FEET OR LARGER - .125 IN.

FOR MOUNTING DETAILS, SEE OTHER DRAWINGS.

HOLES IN SIGNS SHALL BE 3/8" AND PUNCHED AS SHOWN ON THIS DRAWING.

SIGNS WITH FOUR OR MORE HOLES REQUIRE BACKING BARS OR MULTIPLE POSTS.

MISSOURI HIGHWAYS AND TRANSPORTATION COMMISSION
105 WEST CAPITOL
JEFFERSON CITY, MO 65102
1-888-ASK-MODOT (1-888-275-6636)

STATE OF MISSOURI
EILEEN H. RICKERS
NUMBER PE-28338
PROFESSIONAL ENGINEER
THIS SHEET HAS BEEN SIGNED, SEALED AND DATED ELECTRONICALLY.

# HIGHWAY SIGNING

## HOLE PUNCHING

DATE EFFECTIVE: 02/01/2012
DATE PREPARED: 12/22/2011

903.02AL

SHEET NO. 18 OF 19

IF A SEAL IS PRESENT ON THIS SHEET IT HAS BEEN ELECTRONICALLY SEALED AND DATED.

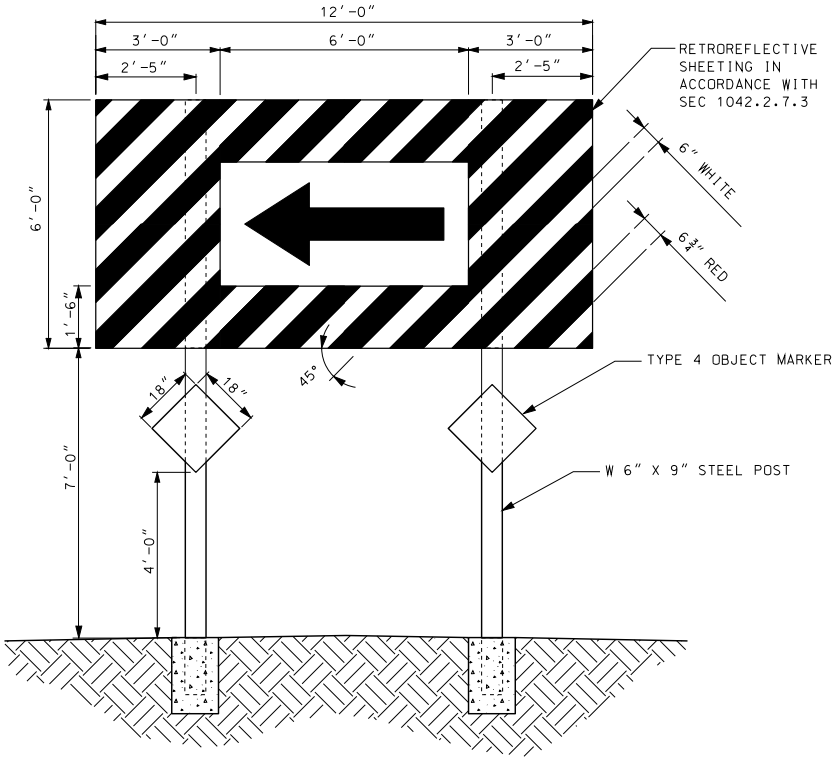


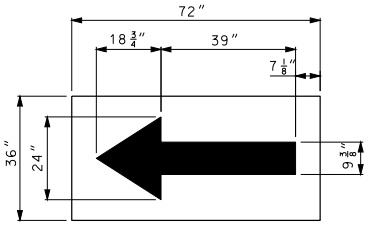


W1-6

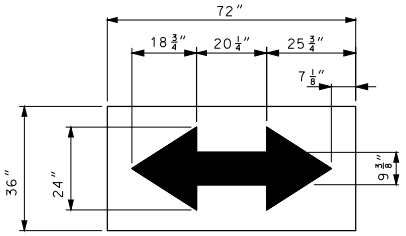


W1-7

GENERAL NOTES:

SIGN BARRICADE SHALL BE CLASSIFIED AS STR4L-3 DESIGNATION.

WHERE A BARRICADE EXTENDS ACROSS A ROADWAY, THE STRIPES SHALL SLOPE DOWNWARD IN THE DIRECTION TOWARD WHICH TRAFFIC MUST TURN OR PASS.

WHERE BOTH RIGHT AND LEFT VEHICULAR MOVEMENTS ARE PROVIDED, THE BARRICADE STRIPES SHALL SLOPE DOWNWARD IN BOTH DIRECTIONS FROM THE CENTER OF THE BARRICADE.

WHERE VEHICULAR MOVEMENTS ARE NOT PROVIDED, THE STRIPES SHALL SLOPE DOWNWARD TOWARD THE CENTER OF THE BARRICADE.

ALL REFLECTORIZED SURFACES SHALL BE RETROREFLECTIVE SHEETING IN ACCORDANCE WITH SEC 1042.2.7.3.

SEE STANDARD PLAN 903.03 FOR BREAKAWAY ASSEMBLY AND TYPE 4 OBJECT MARKER.

MISSOURI HIGHWAYS AND TRANSPORTATION COMMISSION
105 WEST CAPITOL
JEFFERSON CITY, MO 65102
1-888-ASK-MODOT (1-888-275-6636)

STATE OF MISSOURI
ELEEN H. RACKERS
NUMBER PE-28336
PROFESSIONAL ENGINEER
THIS SHEET HAS BEEN SIGNED, SEALED AND DATED ELECTRONICALLY.

# SIGN BARRICADE

| | | | |
|---|---|---|---|
| DATE EFFECTIVE: 02/01/2012<br>DATE PREPARED: 12/22/2011 | 903.02AL | SHEET NO.<br>19 OF 19 | |

IF A SEAL IS PRESENT ON THIS SHEET IT HAS BEEN ELECTRONICALLY SEALED AND DATED.

## STRUCTUAL STEEL POST FOR GROUND MOUNTED SIGNS

| POST DES. NO.* | NOM SIZE (IN.)(LBS/FT) | TORQUE AND HIGH STRENGTH BOLTS | BASE CONNECTION DATA TABLE (IN.) A | B | C | D | E | F | G | W | R |
|---|---|---|---|---|---|---|---|---|---|---|---|
| 1 | W6x9 | $\frac{5}{8}$" ROUND x 2$\frac{3}{4}$" 345 IN./LBS. | 5 | 2 | 1$\frac{1}{4}$ | 2$\frac{3}{4}$ | 1$\frac{1}{8}$ | $\frac{3}{4}$ | $\frac{1}{2}$ | $\frac{1}{4}$ | 11/32 |
| 2 | W6x15 | | | | | | | | | | |
| 3 | W8x18 | | | | | | | | | | |
| 4 | W10x22 | $\frac{3}{4}$" ROUND x 3$\frac{1}{2}$" 555 IN./LBS. | 6 | 2$\frac{1}{4}$ | 1$\frac{3}{8}$ | 3$\frac{1}{2}$ | 1$\frac{1}{4}$ | 1 | $\frac{3}{4}$ | $\frac{5}{16}$ | 13/32 |
| 5 | W10x26 | | | | | | | | | | |
| 6 | W12x35 | | | | | | | | | | |

## POST AND FOOTING DATA TABLE

| POST DES. NO.* | NOM. SIZE | POST WEIGHT LBS/FT | POST WEIGHT LBS/IN | STUB LENGTH | FOOTING DIA. | LEVEL GROUND DEPTH | LEVEL GROUND C.Y. | 6:1 GRADE DEPTH | 6:1 GRADE C.Y. | 4:1 GRADE DEPTH | 4:1 GRADE C.Y. | 3:1 OR 2:1 GRADE DEPTH | 3:1 OR 2:1 GRADE C.Y. |
|---|---|---|---|---|---|---|---|---|---|---|---|---|---|
| 1 | W6 | 9.0 | 0.75 | 3'-0" | 15" | 3'-0" | 0.14 | 3'-2" | 0.15 | 3'-3" | 0.16 | 3'-6" | 0.17 |
| 2 | W6 | 15.0 | 1.25 | 4'-0" | 24" | 4'-0" | 0.47 | 4'-2" | 0.50 | 4'-3" | 0.51 | 4'-6" | 0.54 |
| 3 | W8 | 18.0 | 1.50 | 4'-6" | 28" | 4'-6" | 0.71 | 4'-8" | 0.73 | 4'-9" | 0.74 | 5'-0" | 0.78 |
| 4 | W10 | 22.0 | 1.83 | 5'-0" | 36" | 5'-0" | 1.31 | 5'-2" | 1.36 | 5'-3" | 1.39 | 5'-6" | 1.45 |
| 5 | W10 | 26.0 | 2.17 | 5'-0" | 36" | 5'-0" | 1.31 | 5'-3" | 1.37 | 5'-5" | 1.43 | 5'-9" | 1.52 |
| 6 | W12 | 35.0 | 2.92 | 5'-6" | 36" | 5'-6" | 1.44 | 5'-9" | 1.52 | 5'-11" | 1.56 | 6'-3" | 1.65 |

SHEET METAL BOLT RETAINER CUT FROM 30 GAGE GALVANIZED SHEET METAL. PLACE BETWEEN BASE PLATES. SIZE VARIES TO FIT PLATE. BOLT HOLES TO BE $\frac{1}{16}$" LARGER THAN REQUIRED BOLT SIZE.

BOLT RETAINER

* FOR POST DESIGNS NUMBERS 3, 4, 5 AND 6 HAVING WEIGHTS GREATER THAN 18LBS./FT., POSTS SHALL BE SPACED AT LEAST 7' APART. FOR POST DESIGNS NUMBERS 1 AND 2, POSTS MAY BE SPACED LESS THAN 7' APART. DO NOT USE THREE NUMBER 1 OR 2 POSTS WITH A SIGN WIDTH OF LESS THAN 10'-6".

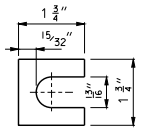


SHIM

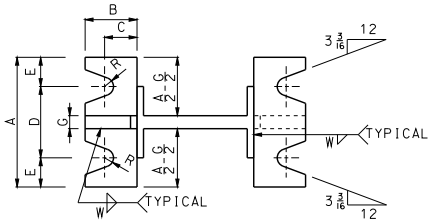


SECTION A-A SECTION B-B
POST AND FOOTING

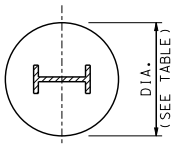


SECTION C-C

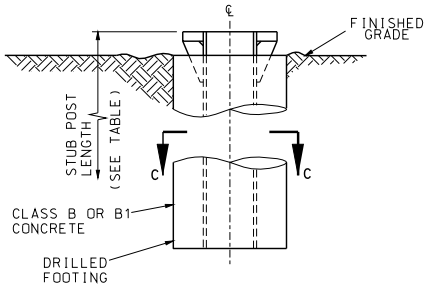


STUB DETAIL




STIFFENER PLATE

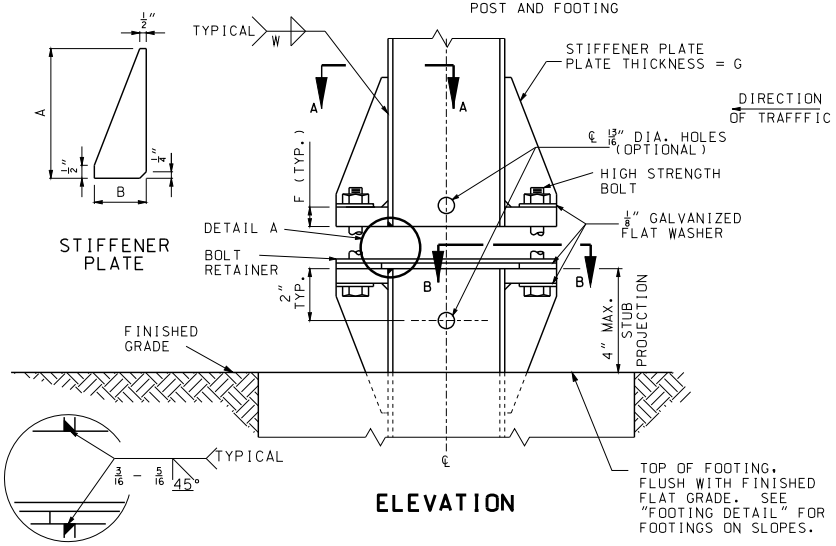


ELEVATION

DETAIL A

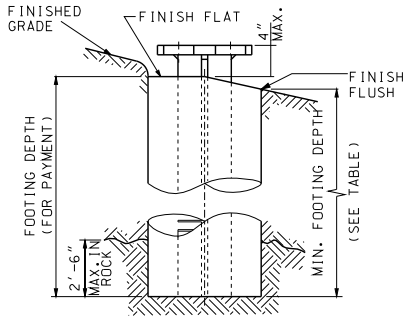


FOOTING DETAIL

GENERAL NOTES:

DESIGN SPECS: AASHTO STANDARD SPECIFICATIONS FOR STRUCTURAL SUPPORTS FOR HIGHWAY SIGNS. LUMINAIRES AND TRAFFIC SIGNALS - 1985 (EXCEPT 2001AND LATEST INTERIMS FOR STRUCTURAL STEEL POSTS).

POSTS, PERFORATED FUSE PLATE AND SPLICE PLATE TO BE GALVANIZED AFTER FABRICATION.

METAL PROJECTING BEYOND THE PLANE OF THE PLATE FACE WILL NOT BE ALLOWED.

REMOVE ALL GALVANIZING RUNS OR BEADS IN THE WASHER AREA.

ALL STRUCTURAL STEEL STIFFENER PLATES AND BASE PLATES, FOR GROUND MOUNTED SIGNS SHALL MEET THE REQUIREMENTS OF ASTM A 36 OR AASHTO M 270 GRADE 50, MINIMUM YIELD 50,000 PSI.

IN THE EVENT THE DISTANCE BETWEEN THE TOP OF THE FOOTING AND THE BOTTOM OF THE SIGN IS LESS THAN 7'-9", THE SIGN HEIGHT AND POST LENGTH IS TO BE INCREASED SUFFICIENTLY TO ACCOMMODATE THIS MINIMUM SPACING.

HINGE PLATES NOT REQUIRED ON SINGLE POST SIGNS OR ANY SIGNS USING PIPE POSTS.

NUTS ON HINGE PLATE BOLTS SHALL BE TIGHTENED TO THE REQUIRED MINIMUM BOLT TENSION VALUES SHOWN IN TABLE 1 SEC. 1080 OF THE STANDARD SPECIFICATIONS.

THE NUT SHALL BE FREE RUNNING. IF THE NUT WILL NOT SPIN ON THE BOLT BECAUSE OF GALVANIZING IRREGULARITIES, A LUBRICANT SHALL BE APPLIED.

ALL BREAKAWAY ASSEMBLY BOLTS SHALL BE TIGHTENED IN A SYSTEMATIC MANNER TO THE PRESCRIBED TORQUE SHOWN ON THIS DRAWING.

EACH BREAKAWAY ASSEMBLY BOLT SHALL BE LOOSENED AND RE-TIGHTENED TO THE REQUIRED TORQUE IN THE SAME ORDER AS THE INITIAL TIGHTENING.

THE THREADS SHALL BE BURRED AT THE NUT USING A CENTER PUNCH TO PREVENT NUT FROM LOOSENING.

POST LENGTH QUANTITY SHOWN ON PLANS INCLUDES STUB.

1" X 2$\frac{1}{2}$" HIGH STRENGTH BOLTS FOR PIPE POSTS SHALL BE OF THE DESIGNATION AASHTO M 164 OR ASTM A 449. ALL OTHER H.S. BOLTS SHALL BE OF THE DESIGNATION AASHTO M 164.

FURNISH TWO .012"± AND TWO .0032"± THICK SHIMS PER POST FROM BRASS SHIM STOCK OR STRIP, DESIGNATION ASTM B 36. SHIM AS REQUIRED TO PLUMB POST.

HIGH STRENGTH BOLTS WITH HEX NUT AND THREE WASHERS WITH EACH BOLT ARE TO BE GALVANIZED.

OPTIONAL HOLES ($\frac{13}{16}$" ROUND FOR "I" SHAPE POSTS AND $\frac{9}{16}$" ROUND FOR PIPE POST BASE PLATES) AS SHOWN IN "ELEVATIONS" ARE TO BE USED AS AID FOR GALVANIZING ONLY.

IF A SEAL IS PRESENT ON THIS SHEET IT HAS BEEN ELECTRONICALLY SEALED AND DATED.


MISSOURI HIGHWAYS AND TRANSPORTATION COMMISSION
105 WEST CAPITOL
JEFFERSON CITY, MO 65102
1-888-ASK-MODOT (1-888-275-6636)


STATE OF MISSOURI
KATHRYN PHILLIPS HARVEY
NUMBER PE-23751
PROFESSIONAL ENGINEER
THIS SHEET HAS BEEN SIGNED, SEALED AND DATED ELECTRONICALLY.

# SIGN MOUNTING DETAILS
## BREAKAWAY ASSEMBLIES FOR GROUND MOUNTED SIGNS

DATE EFFECTIVE: 02/01/2012
DATE PREPARED: 12/19/2011

903.03BH

SHEET NO. 1 OF 11

## WIDE FLANGE STRUCTURAL STEEL POSTS DESIGN DATA

| POST DES. NO. | NOM. SIZE (IN.) | WEIGHT LB/FT | WEIGHT LB/IN | DEPTH (IN.) | FLANGE WIDTH (IN.) | FLANGE THICK (IN.) | WEB THICK (IN.) |
|---|---|---|---|---|---|---|---|
| 1 | W6 | 9 | 0.75 | 5 7/8 | 4 | 3/16 | 3/16 |
| 2 | W6 | 15 | 1.25 | 6 | 6 | 1/4 | 1/4 |
| 3 | W8 | 18 | 1.50 | 8 1/8 | 5 1/4 | 5/16 | 1/4 |
| 4 | W10 | 22 | 1.83 | 10 1/8 | 5 3/4 | 3/8 | 1/4 |
| 5 | W10 | 26 | 2.17 | 10 3/8 | 5 3/4 | 7/16 | 1/4 |
| 6 | W12 | 35 | 2.92 | 12 1/2 | 6 1/2 | 1/2 | 5/16 |

THE WEIGHT OF STRUCTURAL STEEL POSTS SHOWN IN THE CONTRACT HAS BEEN COMPUTED USING THE WEIGHTS SHOWN.

## PERFORATED FUSE PLATE DATA TABLE

| POST DESIGN NO. | F (IN.) | G (IN.) | H (IN.) | J (IN.) | K (IN.) | L (IN.) | M (IN.) | N (IN.) | d1 (IN.) | d2 (IN.) | P (IN.) | BOLT DIA. (IN.) | WT. (EA.) (LBS.) |
|---|---|---|---|---|---|---|---|---|---|---|---|---|---|
| 1 | 4 1/4 | 1 | 1 1/8 | 4 | 2 1/4 | 7/8 | 1 | 1/2 | 9/16 | 3/4 | 3/16 | 1/2 | 0.76 |
| 2 | 5 | 1 1/4 | 1 1/4 | 6 | 3 1/2 | 1 1/4 | 1 1/2 | 3/4 | 11/16 | 1 1/4 | 1/4 | 5/8 | 1.67 |
| 3 | 5 | 1 1/4 | 1 1/4 | 5 1/4 | 2 3/4 | 1 1/4 | 1 1/4 | 3/4 | 11/16 | 1 1/16 | 1/4 | 5/8 | 1.51 |
| 4 | 6 | 1 1/2 | 1 1/2 | 5 3/4 | 2 3/4 | 1 1/2 | 1 3/8 | 13/16 | 13/16 | 1 1/8 | 5/16 | 3/4 | 2.52 |
| 5 | 6 | 1 1/2 | 1 1/2 | 5 3/4 | 2 3/4 | 1 1/2 | 1 3/8 | 15/16 | 15/16 | 1 1/8 | 5/16 | 3/4 | 2.52 |
| 6 | 6 | 1 1/2 | 1 1/2 | 6 1/2 | 3 1/2 | 1 1/2 | 1 5/8 | 15/16 | 15/16 | 1 5/16 | 3/8 | 3/4 | 3.35 |

## SPLICE PLATE DATA TABLE

| POST DESIGN NO. | J (IN.) | K (IN.) | L (IN.) | U (IN.) | d1 (IN.) | BOLT DIA. (IN.) | WT. (EA.) (LBS.) |
|---|---|---|---|---|---|---|---|
| 1 | 4 | 2 1/4 | 7/8 | 3/16 | 9/16 | 1/2 | 2.45 |
| 2 | 6 | 3 1/2 | 1 1/4 | 1/4 | 11/16 | 5/8 | 4.89 |
| 3 | 5 1/4 | 2 3/4 | 1 1/4 | 5/16 | 11/16 | 5/8 | 5.32 |
| 4 | 5 3/4 | 2 3/4 | 1 1/2 | 5/16 | 13/16 | 3/4 | 5.75 |
| 5 | 5 3/4 | 2 3/4 | 1 1/2 | 7/16 | 15/16 | 3/4 | 8.04 |
| 6 | 6 1/2 | 3 1/2 | 1 1/2 | 1/2 | 15/16 | 3/4 | 10.47 |

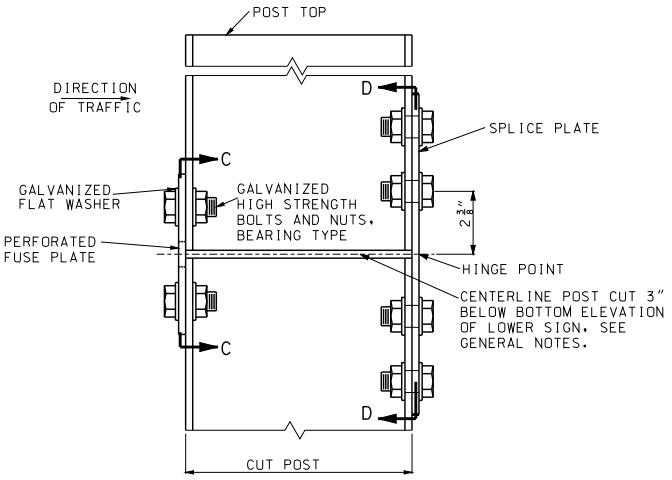


ELEVATION

**PERFORATED FUSE PLATE AND SPLICE PLATE DETAIL**

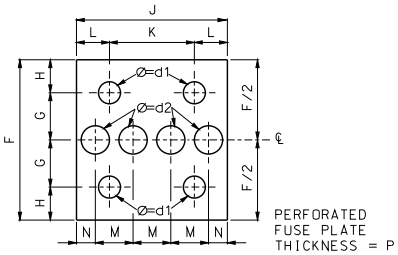


ELEVATION C-C

ALL HOLES SHALL BE DRILLED. ALL PLATE CUTS SHALL PREFERABLY BE SAW CUTS. HOWEVER: FLAME CUTTING WILL BE PERMITTED PROVIDED ALL EDGES ARE GROUND.

PERFORATED FUSE PLATE AND SPICE PLATE SHALL BE FABRICATED FROM ASTM A 36 STRUCTURAL STEEL.

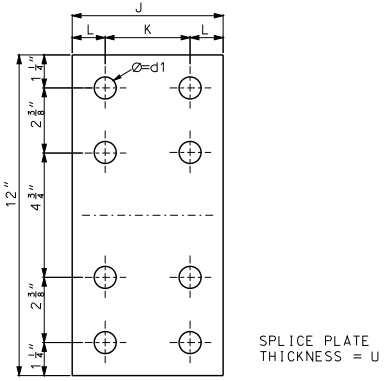


ELEVATION D-D

GENERAL NOTE:

FOR ROADWAYS WHERE TRAFFIC MAY STRIKE THE BACKSIDE OF THE POST, PERFORATED FUSE PLATES SHALL BE INSTALLED ON BOTH SIDES OF THE POST.


MISSOURI HIGHWAYS AND TRANSPORTATION COMMISSION
105 WEST CAPITOL
JEFFERSON CITY, MO 65102
1-888-ASK-MODOT (1-888-275-6636)


STATE OF MISSOURI
KATHRYN PHILLIPS HARVEY
NUMBER PE-23751
PROFESSIONAL ENGINEER
THIS SHEET HAS BEEN SIGNED, SEALED AND DATED ELECTRONICALLY.

# SIGN MOUNTING DETAILS
## BREAKAWAY ASSEMBLIES FOR GROUND MOUNTED SIGNS

DATE EFFECTIVE: 02/01/2012
DATE PREPARED: 12/19/2011

903.03BH

SHEET NO. 2 OF 11

IF A SEAL IS PRESENT ON THIS SHEET IT HAS BEEN ELECTRONICALLY SEALED AND DATED.

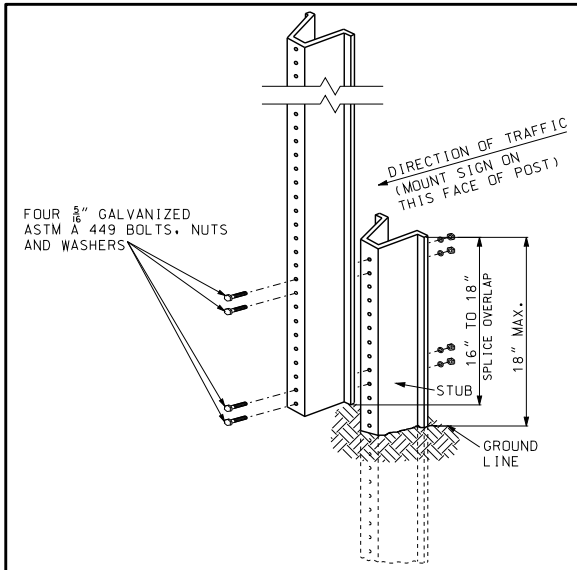


## U-CHANNEL POST DETAIL
## PERMAENT AND TEMPORARY INSTALLATION

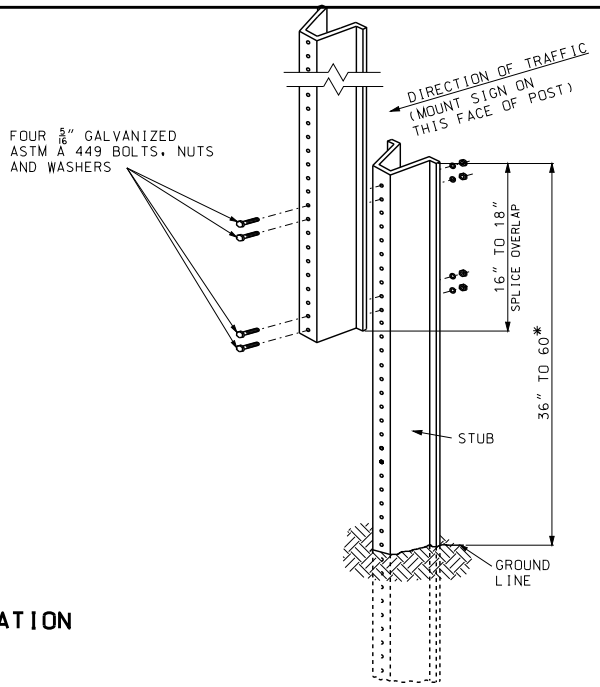


## OPTIONAL U-CHANNEL POST DETAIL
## TEMPORARY INSTALLATION ONLY

| SIGN AREA (SQ.FT.) | POST TYPE | | |
|---|---|---|---|
| | U-CHANNEL | WOOD | PERFORATED SQUARE STEEL TUBING |
| ≤ 10 | 1 - 3.0 LB./FT.* | 1 - 4" X 4"* | 1 - 2" 12 GA.* |
| > 10 ≤ 16 | 2 - 3.0 LB./FT. | 2 - 4" X 4"<br>1 - 4" X 6"* | 2 - 2" 12 GA. |
| > 16 ≤ 24 | 2 - 3.0 LB./FT. | 2 - 4" X 6" | 3 - 2" 12 GA.** |
| > 24 ≤ 30 | 3 - 3.0 LB./FT. | 2 - 4" X 6" | N/A |
| > 30 ≤ 50 | N/A | 2 - 6" X 6" | N/A |

* SIGNS GREATER THAN 4 FEET IN WIDTH, EXCEPT DIAMOND SHAPE SIGNS, REQUIRE TWO POSTS.

** REQUIRES SLIP BASE PER MANUFACTURER'S RECOMMENDATION.

## POST SIZE REQUIREMENTS

USE OF SPLICE IS OPTIONAL.

PERMANENT AND TEMPORARY INSTALLATIONS: SPLICE OVERLAP SHALL BE POSITION ENTIRELY BETWEEN GROUND LINE AND 18" ABOVE GROUND LINE.

OPTIONAL TEMPORARY INSTALLATIONS: SPLICE OVERLAY MAY BE POSITIONED BETWEEN 18" AND 60" ABOVE GROUND LINE.
* IF A PLAQUE IS USED, NEITHER THE SIGN NOR PLAQUE SHALL BE POSITIONED WITH THE SPLICE OVERLAP.

ONLY ONE SPLICE WILL BE ALLOWED PER POST.

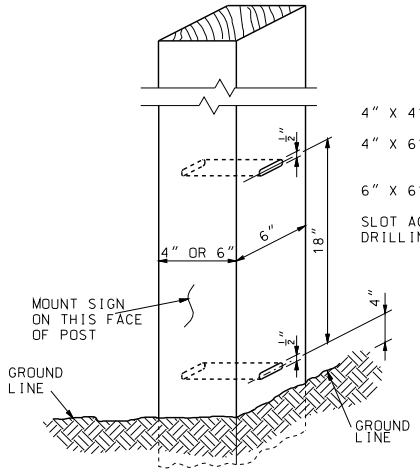


4" X 4" WOOD POST - NO SLOTS OR HOLES REQUIRED

4" X 6" WOOD POST - 1 1/2" X 1/2" SLOT ON 6" SIDE OR 1 1/2" DIA. HOLE ON 6" SIDE

6" X 6" WOOD POST - 2" X 1/2" SLOT OR 2" DIA. HOLE

SLOT ACROSS NEUTRAL AXIS FORMED BY SUCCESSIVE DRILLING WITH 1/2" BIT.

## WOOD POST DETAIL

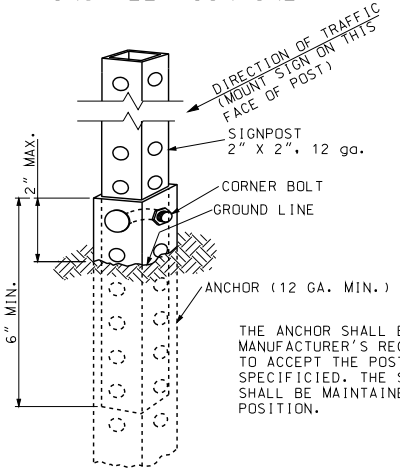


THE ANCHOR SHALL BE SIZED AS PER MANUFACTURER'S RECOMMENDATIONS TO ACCEPT THE POST SIZE SPECIFICIED. THE SIGN ASSEMBLY SHALL BE MAINTAINED IN A PLUMB POSITION.

THE SIGNPOST SHALL BE ATTACHED TO THE ANCHOR WITH THE CORNER BOLT PER MANUFACTURER'S SPECIFICATION.

THE SPLICE SHALL CONSIST OF A 12 INCH PIECE OF 1 3/4 INCH TUBE, INSERTED 6" INTO BOTH THE UPPER AND LOWER SIGNPOST SECTIONS AND CORNER-BOLTED AT BOTH ENDS.

## PERFORATED SQUARE STEEL TUBE POST DETAIL

GENERAL NOTES:

ALL POSTS SHALL BE EMBEDDED A MINIMUM OF 3 FEET.

MISSOURI HIGHWAYS AND TRANSPORTATION COMMISSION
105 WEST CAPITOL
JEFFERSON CITY, MO 65102
1-888-ASK-MODOT (1-888-275-6636)

STATE OF MISSOURI
KATHRYN PHILLIPS HARVEY
NUMBER PE-2007051
PROFESSIONAL ENGINEER
THIS SHEET HAS BEEN SIGNED, SEALED AND DATED ELECTRONICALLY.

# SIGN MOUNTING DETAILS
POST MOUNTING DETAILS

DATE EFFECTIVE: 02/01/2012
DATE PREPARED: 12/19/2011

903.03BH

SHEET NO. 3 OF 11

IF A SEAL IS PRESENT ON THIS SHEET IT HAS BEEN ELECTRONICALLY SEALED AND DATED.

## ROUND PIPE POST FOR GROUND MOUNTED SIGNS

| NOMINAL PIPE SIZE (IN.) | BOLT DATA | | | BASE CONNECTION DATA TABLE (IN.) | | | | | |
|---|---|---|---|---|---|---|---|---|---|
| | SIZE (IN.) | LENGTH (IN.) | TORQUE IN.-LB | A | B | C | R | T | W |
| 2½ & 3 | ½ | 3½ | 140 | 6¼ | 9 | ¼ | 9/32 | 1 | ¼ |
| 4 | 5/8 | 3¾ | 345 | 7 3/16 | 10 | ¼ | ⅜ | 1 | 5/16 |

## ROUND PIPE POST AND FOOTING DATA TABLE

| NOM. SIZE (IN.) | WEIGHT | | STUB LENGTH | FOOTING | | CONCRETE |
|---|---|---|---|---|---|---|
| | LBS/FT | LBS/IN | | DIA. | DEPTH | C.Y. |
| 2½ | 5.79 | 0.48 | 4'- 3½" | 12" | 4'-6" | 0.13 |
| 3 | 7.58 | 0.63 | 4'- 3½" | 12" | 4'-6" | 0.13 |
| 4 | 10.79 | 0.90 | 5'- 3½" | 18" | 5'-6" | 0.36 |

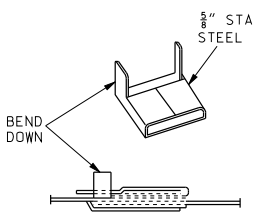


VIEW SHOWING ENDS OF STRAP. CLAMPED IN SEAL

STRAP SEAL

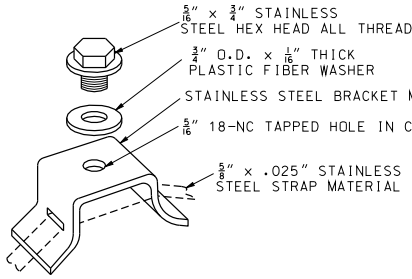


FLARED LEG SIGN BRACKET

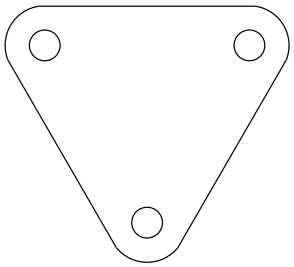

BOLT RETAINER

SHEET METAL BOLT RETAINER CUT FROM 30 GUAGE GALVANIZED SHEET METAL. PLACE BETWEEN BASE PLATES. SIZE VARIES TO FIT PLATE. BOLT HOLES SHALL BE 1/16" LARGER THAN REQUIRED BOLT SIZE.

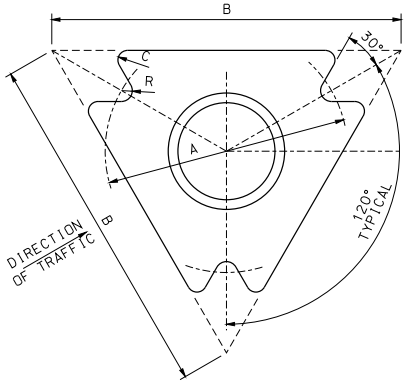


PLAN VIEW

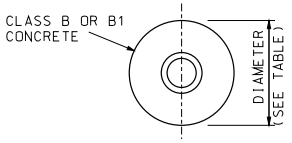


SECTION C-C

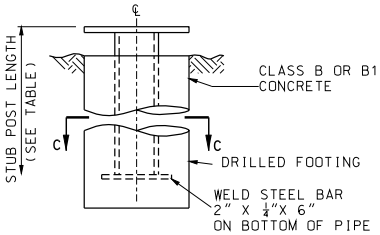


FOUNDATION DETAIL
SLIP BASE ASSEMBLIES

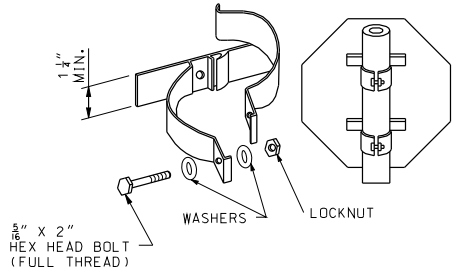


STAINLESS STEEL HARDWARE
CLAMP TYPE SIGN SUPPORTS FOR PIPE POST

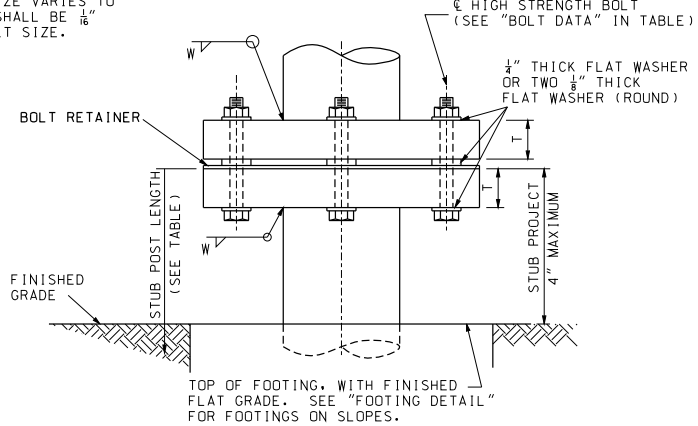


ELEVATION
(STEEL PIPE POST BASE CONNECTION)

MULTI-DIRECTION SLIP BASE

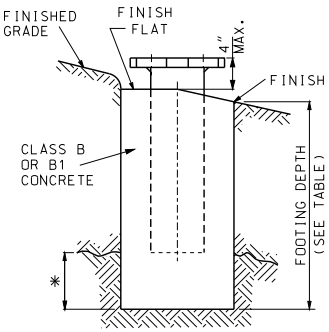


FOOTING DETAIL

* PIPE 3" DIA. AND UNDER: 2' MAXIMUM IN ROCK. PIPE OVER 3" DIA.: 3' MAXIMUM IN ROCK

ROLLED CRIMP TO ENGAGE PIPE O.D.

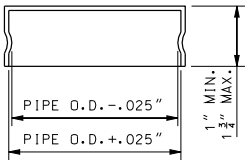


FRICTION CAP

GENERAL NOTE:

REFER TO THE GENERAL NOTES ON SHEET 1.

IF A SEAL IS PRESENT ON THIS SHEET IT HAS BEEN ELECTRONICALLY SEALED AND DATED.

MISSOURI HIGHWAYS AND TRANSPORTATION COMMISSION
105 WEST CAPITOL
JEFFERSON CITY, MO 65102
1-888-ASK-MODOT (1-888-275-6636)

STATE OF MISSOURI
KATHRYN PHILLIPS HARVEY
NUMBER PE-23751
PROFESSIONAL ENGINEER
THIS SHEET HAS BEEN SIGNED, SEALED AND DATED ELECTRONICALLY.

# SIGN MOUNTING DETAILS
POST FOR SIGNS
30 SQUARE FEET
OR SMALLER

DATE EFFECTIVE: 02/01/2012
DATE PREPARED: 12/19/2011

903.03BH

SHEET NO. 4 OF 11

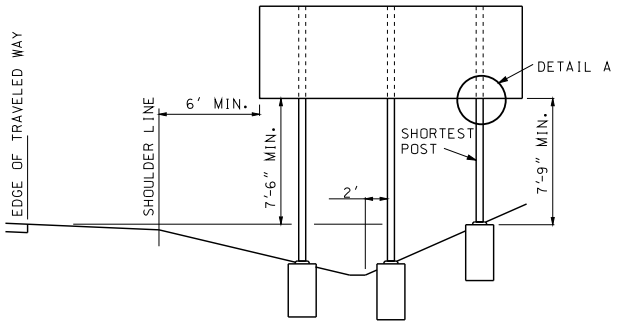


DITCH SECTION

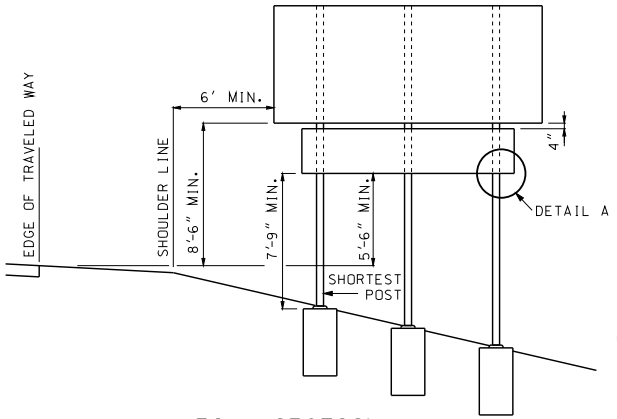


FILL SECTION

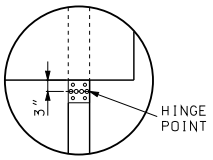


DETAIL A

NOTE: SEE SHEET 2 FOR FUSE PLATE DETAILS.

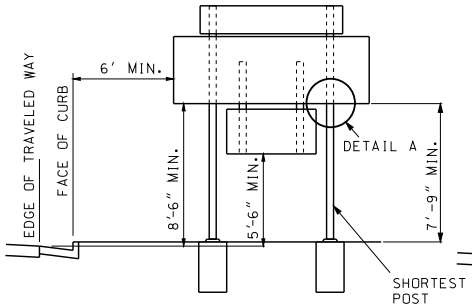


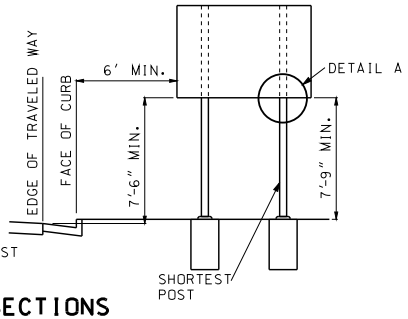


BARRIER CURB SECTIONS

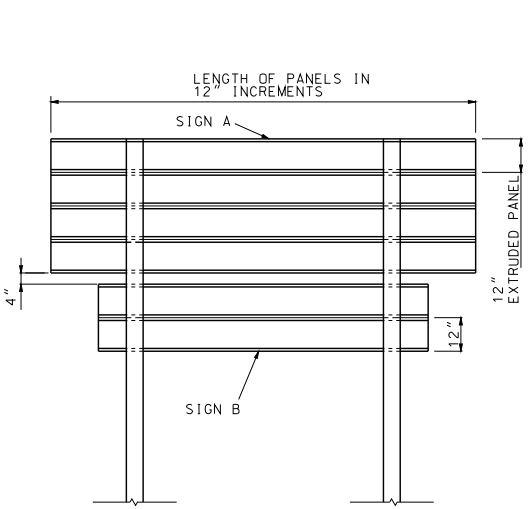


SIGN B MAY BE MOUNTED ABOVE OR BELOW SIGN A AS REQUIRED.

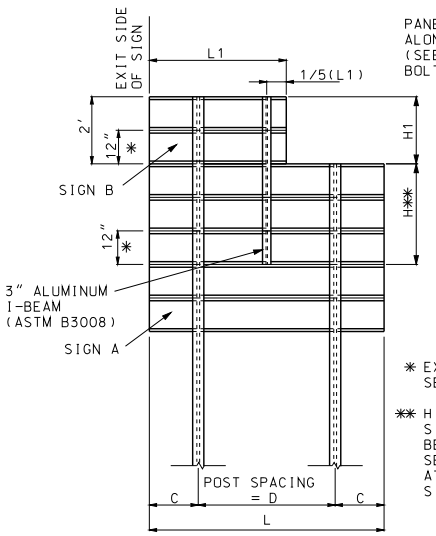


PANEL BOLTS SPACED 24″ O.C. ALONG SIGN/PANEL INTERFACE. (SEE OTHER DRAWING FOR BOLT & WASHER DETAILS.)

* EXTRUDED ALUMINUM PANEL. SEE OTHER DRAWINGS.

** H = H1 + 12″. H APPLIES TO SIGNS SUSPENDED ABOVE OR BELOW THE PRIMARY SIGN IF SECONDARY SIGN IS NOT ATTACHED TO THE MAIN SIGN POSTS.

USE THIS DETAIL FOR EXIT NUMBER PANELS MOUNTED ON GUIDE SIGNS.

SIGN AND PANEL SPACING

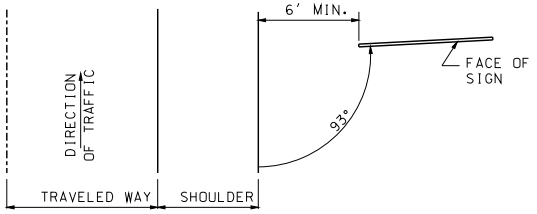


LOCATION SKETCH

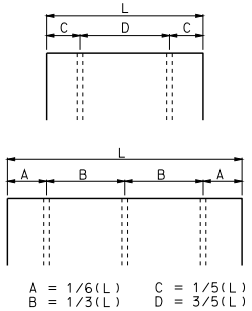


A = 1/6(L) C = 1/5(L)
B = 1/3(L) D = 3/5(L)

POST SPACING

FOR L OF 6′ TO 17′ USE 2 POSTS.
FOR L GREATER THAN 17′ USE 3 POSTS.
FOR L LESS THAN 17′, 3 POSTS MAY BE USED DEPENDING ON SOIL CONDITIONS.
FOR POST DESIGNS 2, 4, 5 AND 6, LENGTH D OR B MUST BE 7 FEET.

GENERAL NOTE:

REFER TO THE GENERAL NOTES ON SHEET 1.

IF A SEAL IS PRESENT ON THIS SHEET IT HAS BEEN ELECTRONICALLY SEALED AND DATED.

MISSOURI HIGHWAYS AND TRANSPORTATION COMMISSION
105 WEST CAPITOL
JEFFERSON CITY, MO 65102
1-888-ASK-MODOT (1-888-275-6636)

STATE OF MISSOURI
KATHRYN PHILLIPS HARVEY
NUMBER PE-23751
PROFESSIONAL ENGINEER
THIS SHEET HAS BEEN SIGNED, SEALED AND DATED ELECTRONICALLY.

# SIGN MOUNTING DETAILS
TYPICAL SECTION AND POST SPACING

DATE EFFECTIVE: 02/01/2012
DATE PREPARED: 12/19/2011

903.03BH

SHEET NO. 5 OF 11

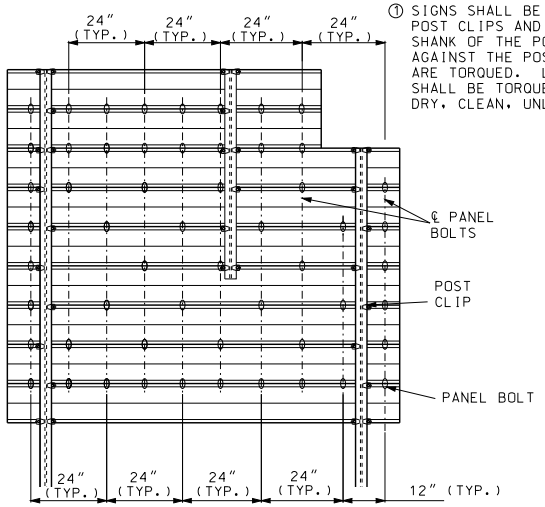


① SIGNS SHALL BE FIELD ATTACHED TO POSTS WITH POST CLIPS AND BOLTS. SEE POST CLIP DETAIL. THE SHANK OF THE POST CLIP BOLT SHALL FIT TIGHTLY AGAINST THE POST FLANGE AFTER THE LOCKNUTS ARE TORQUED. LOCKNUTS ON THE POST CLIP BOLTS SHALL BE TORQUED TO 225 INCH-POUNDS WHEN USING DRY, CLEAN, UNLUBRICATED THREADS.

## PANEL BOLT LOCATION

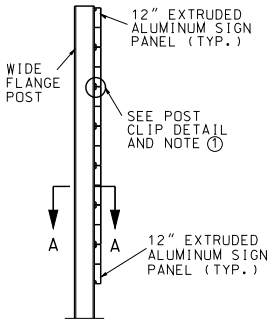


END ELEVATION

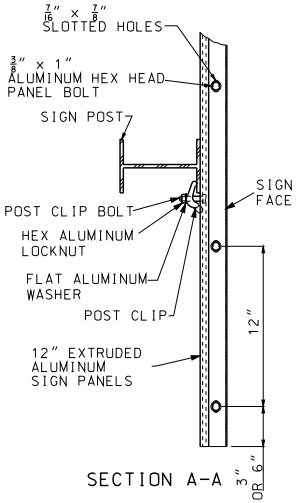


SECTION A-A

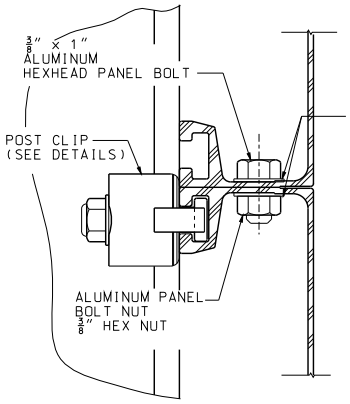


POST CLIP DETAIL

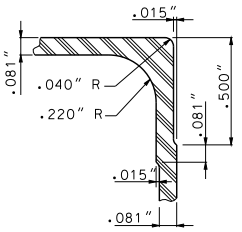


DETAIL C

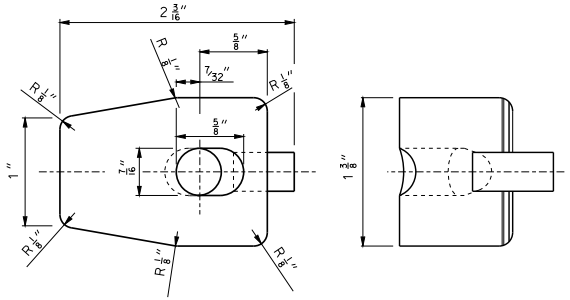


PLAN VIEW

END VIEW

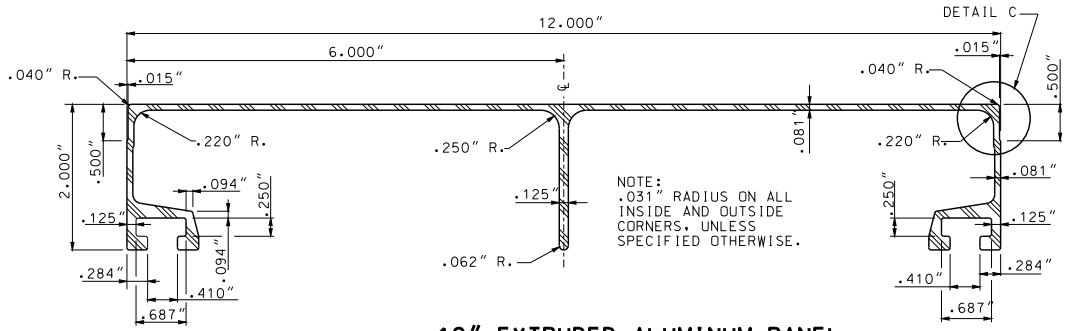


NOTE:
.031" RADIUS ON ALL INSIDE AND OUTSIDE CORNERS, UNLESS SPECIFIED OTHERWISE.

## 12" EXTRUDED ALUMINUM PANEL

MINIMUM WT. = 2.40 LBS./FT.

NOTE:
MINIMUM WEIGHT AND THICKNESS DIMENSIONS SHOWN. HEAVIER PANELS MAY BE USED.

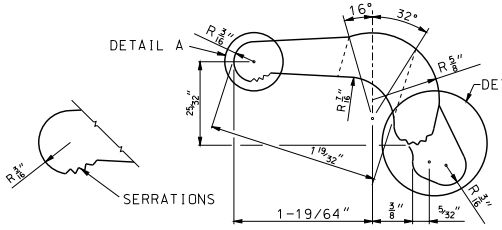


DETAIL A
ENLARGED VIEW OF SERRATIONS

ELEVATION VIEW

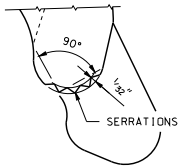


DETAIL B
ENLARGED DETAIL OF SERRATIONS

## POST CLIP

SAW GATING AS SHOWN (APPROXIMATELY FLAT PERMISSABLE)

POST CLIPS SHALL BE ASTM B 108, 356-T6 ALUMINUM ALLOY.

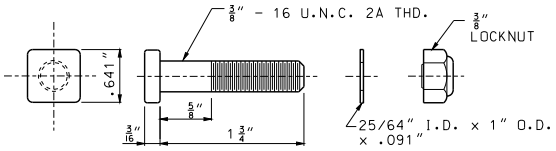


POST CLIP BOLT
WITH FLAT WASHER AND LOCKNUT

NOTE:
SQUARE BOLT HEAD SHOWN. RECTANGULAR BOLT HEAD WITH LEAST DIMENSION OF .641" MAY BE USED.

BOLT - 1 3/4 x 3/8 ALUMINUM
HEX LOCKNUT - 3/8" ALUMINUM
WASHER - ALUMINUM

MISSOURI HIGHWAYS AND TRANSPORTATION COMMISSION
105 WEST CAPITOL
JEFFERSON CITY, MO 65102
1-888-ASK-MODOT (1-888-275-6636)

STATE OF MISSOURI
KATHRYN PHILLIPS HARVEY
NUMBER PE-23751
PROFESSIONAL ENGINEER
THIS SHEET HAS BEEN SIGNED, SEALED AND DATED ELECTRONICALLY.

# SIGN MOUNTING DETAILS
EXTRUDED ALUMINUM PANEL DETAILS

DATE EFFECTIVE: 02/01/2012
DATE PREPARED: 12/19/2011

903.03BH

SHEET NO. 6 OF 11

IF A SEAL IS PRESENT ON THIS SHEET IT HAS BEEN ELECTRONICALLY SEALED AND DATED.

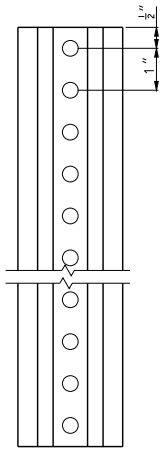


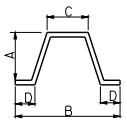


| STEEL OBJECT MARKER POST | | | | | |
|---|---|---|---|---|---|
| LIMITS | LBS/FT (5) | DIMENSIONS - INCHES | | | |
| | | A | B | C | D |
| MIN. | 1.80 | 1 1/4 | 2 1/2 | 31/32 | 15/32 |
| MAX. | 2.25 | 1 3/8 | 3 1/4 | 1 1/4 | 23/32 |

(5) WEIGHT BEFORE GALVANIZING OR PUNCHING. LIMITS SHOWN ARE ABSOLUTE. NO FURTHER WEIGHT, DIMENSIONAL OR COMMERCIAL TOLERANCE WILL BE ACCEPTABLE.

HOLE PUNCHING TO EQUAL 3/8" DIAMETER HOLES, ONE INCH CENTER TO CENTER, BEGINNING ONE-HALF INCH FROM THE END AND CONTINUING THE ENTIRE LENGTH OF THE POST.

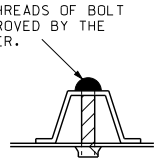

FOUL THREADS OF BOLT AS APPROVED BY THE ENGINEER.

## OBJECT MARKER POST AND FASTENER DETAILS

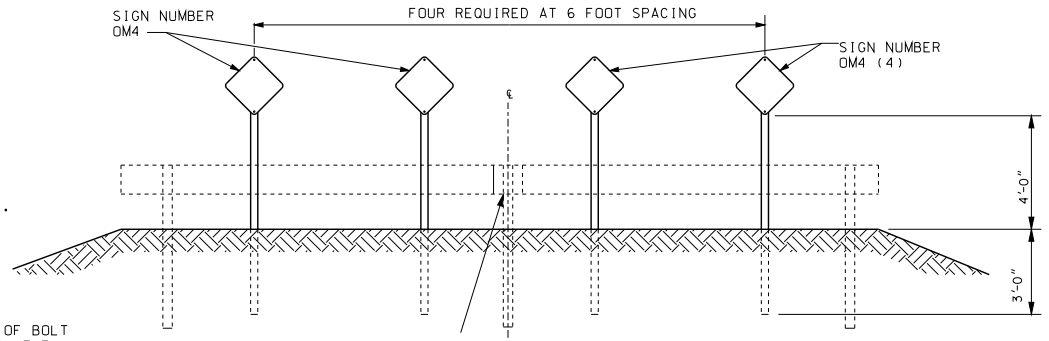


MOUNTING DETAILS
(END OF ROAD OR STREET)

## TYPE 4 OBJECT MARKER SIGN OM4

(4) RED REFLECTIVE SHEETING IN ACCORDANCE WITH SEC 104.2.7.3 ON 0.080 SHEET ALUMINUM.

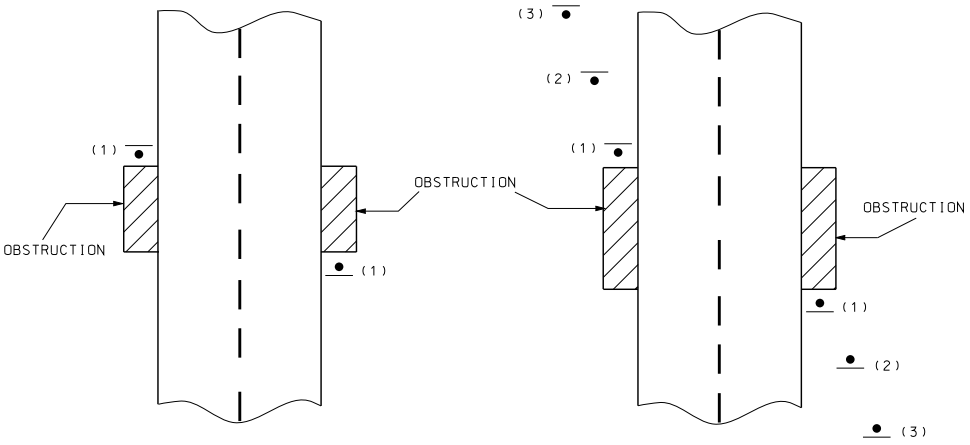


OBSTRUCTION < 20' LONGITUDINALLY

OBSTRUCTION > 20' LONGITUDINALLY

(1) PLACE AS NEAR THE OBSTRUCTION AS POSSIBLE, AND ALIGN INSIDE EDGE WITH THE INSIDE EDGE OF OBSTRUCTION.
(2) PLACE 1.5 FT. OUTSIDE OF FIRST MARKER AND 20 FT. UPSTREAM.
(3) PLACE 3.0 FT. OUTSIDE OF FIRST MARKER AND 40 FT. UPSTREAM.

## TYPE 3 OBJECT MARKER SIGN OM3

NOTE:
WHERE FIELD CONDITIONS DO NOT ALLOW FOR THE 1.5 FT. AND 3.0 FT. LATERAL OFFSETS OF SIGNS (2) AND (3) RESPECTIVELY, THE SIGNS SHOULD BE OFFSET AS MUCH AS PRACTICABLE.

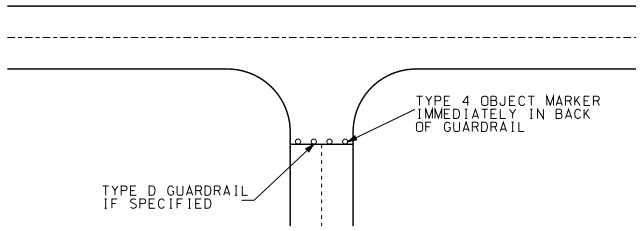


## TYPICAL ROAD CLOSURE

GENERAL NOTES:

THE CONTRACT UNIT PRICE FOR EACH TYPE 3 OR 4 OBJECT MARKER SHALL INCLUDE SIGN PANEL, REFLECTIVE SHEETING, AND POST, REGARDLESS OF LENGTH.

STRIPES ON TYPE 3 OBJECT MARKERS SHALL BE SLOPED DOWNWARD IN THE INTENDED DIRECTION OF TRAFFIC.

MISSOURI HIGHWAYS AND TRANSPORTATION COMMISSION
105 WEST CAPITOL
JEFFERSON CITY, MO 65102
1-888-ASK-MODOT (1-888-275-6636)

STATE OF MISSOURI
KATHRYN PHILLIPS HARVEY
NUMBER PE-2575I
PROFESSIONAL ENGINEER
THIS SHEET HAS BEEN SIGNED, SEALED AND DATED ELECTRONICALLY.

# SIGN MOUNTING DETAILS
DELINEATORS OBJECT MARKERS

DATE EFFECTIVE: 02/01/2012
DATE PREPARED: 12/19/2011

903.03BH

SHEET NO. 7 OF 11

IF A SEAL IS PRESENT ON THIS SHEET IT HAS BEEN ELECTRONICALLY SEALED AND DATED.

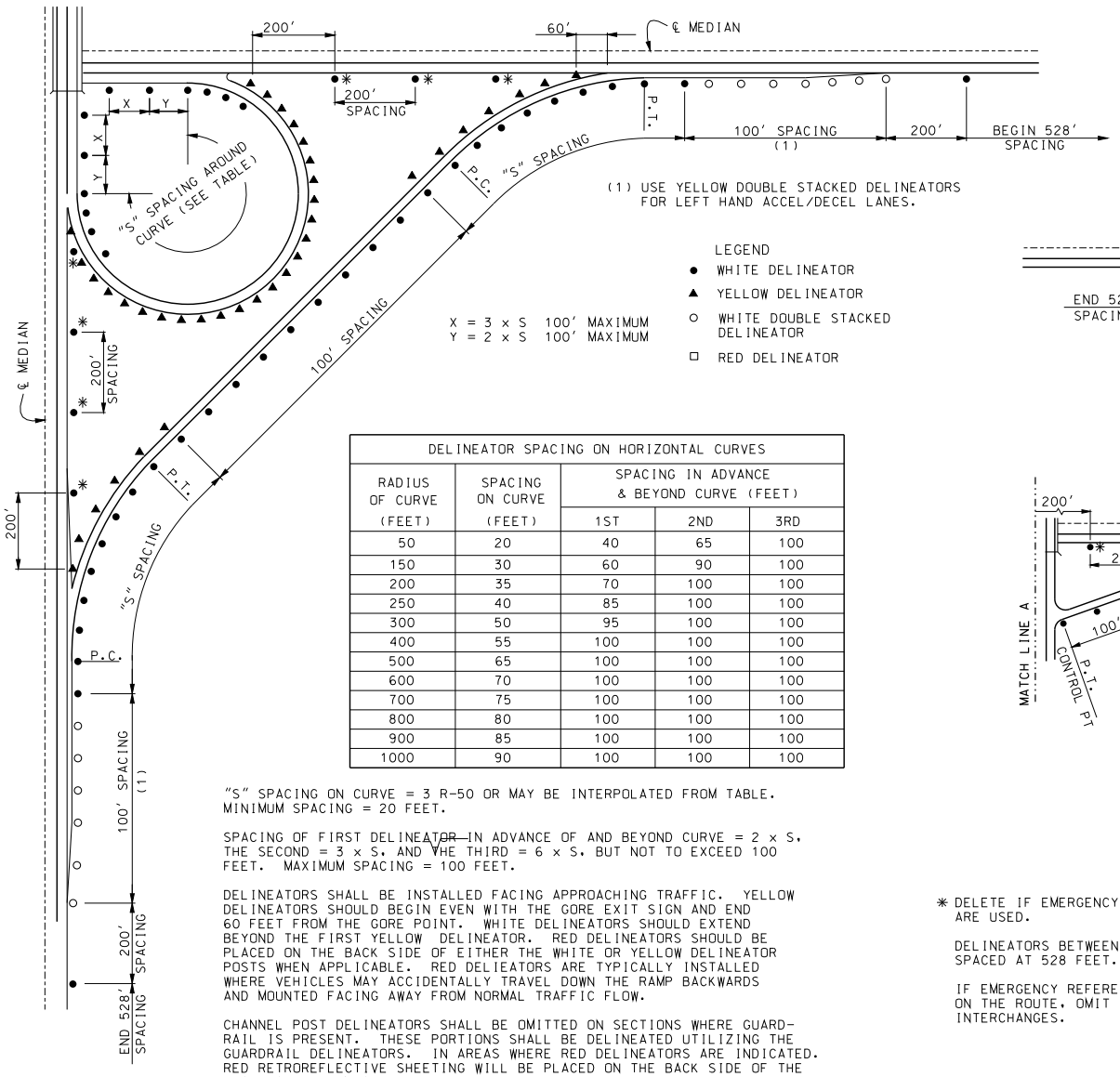


(1) USE YELLOW DOUBLE STACKED DELINEATORS FOR LEFT HAND ACCEL/DECEL LANES.

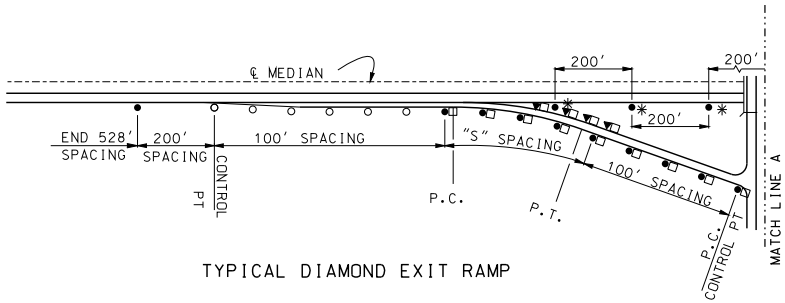


TYPICAL DIAMOND EXIT RAMP

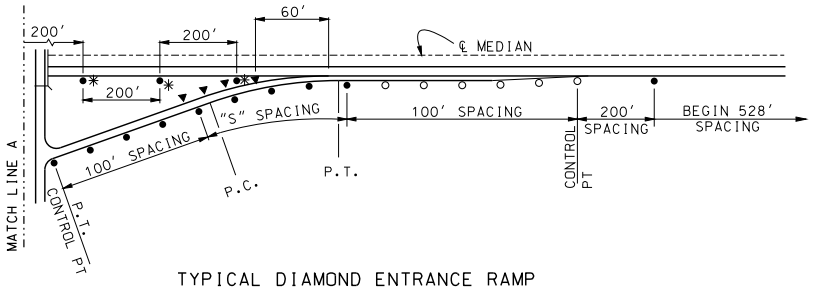


TYPICAL DIAMOND ENTRANCE RAMP

## TYPICAL INTERCHANGE

| DELINEATOR SPACING ON HORIZONTAL CURVES | | | | |
|---|---|---|---|---|
| RADIUS OF CURVE (FEET) | SPACING ON CURVE (FEET) | SPACING IN ADVANCE & BEYOND CURVE (FEET) | | |
| | | 1ST | 2ND | 3RD |
| 50 | 20 | 40 | 65 | 100 |
| 150 | 30 | 60 | 90 | 100 |
| 200 | 35 | 70 | 100 | 100 |
| 250 | 40 | 85 | 100 | 100 |
| 300 | 50 | 95 | 100 | 100 |
| 400 | 55 | 100 | 100 | 100 |
| 500 | 65 | 100 | 100 | 100 |
| 600 | 70 | 100 | 100 | 100 |
| 700 | 75 | 100 | 100 | 100 |
| 800 | 80 | 100 | 100 | 100 |
| 900 | 85 | 100 | 100 | 100 |
| 1000 | 90 | 100 | 100 | 100 |

"S" SPACING ON CURVE = 3 R-50 OR MAY BE INTERPOLATED FROM TABLE. MINIMUM SPACING = 20 FEET.

SPACING OF FIRST DELINEATOR IN ADVANCE OF AND BEYOND CURVE = 2 x S, THE SECOND = 3 x S, AND THE THIRD = 6 x S, BUT NOT TO EXCEED 100 FEET. MAXIMUM SPACING = 100 FEET.

DELINEATORS SHALL BE INSTALLED FACING APPROACHING TRAFFIC. YELLOW DELINEATORS SHOULD BEGIN EVEN WITH THE GORE EXIT SIGN AND END 60 FEET FROM THE GORE POINT. WHITE DELINEATORS SHOULD EXTEND BEYOND THE FIRST YELLOW DELINEATOR. RED DELINEATORS SHOULD BE PLACED ON THE BACK SIDE OF EITHER THE WHITE OR YELLOW DELINEATOR POSTS WHEN APPLICABLE. RED DELIEATORS ARE TYPICALLY INSTALLED WHERE VEHICLES MAY ACCIDENTALLY TRAVEL DOWN THE RAMP BACKWARDS AND MOUNTED FACING AWAY FROM NORMAL TRAFFIC FLOW.

CHANNEL POST DELINEATORS SHALL BE OMITTED ON SECTIONS WHERE GUARD-RAIL IS PRESENT. THESE PORTIONS SHALL BE DELINEATED UTILIZING THE GUARDRAIL DELINEATORS. IN AREAS WHERE RED DELINEATORS ARE INDICATED. RED RETROREFLECTIVE SHEETING WILL BE PLACED ON THE BACK SIDE OF THE GUARDRAIL DELINEATOR.

REFLECTIVE SHEETING SHALL BE IN ACCORDANCE WITH SEC 1042.2.7.3.

* DELETE IF EMERGENCY REFERENCE MARKERS ARE USED.

DELINEATORS BETWEEN INTERCHANGES SPACED AT 528 FEET.

IF EMERGENCY REFERENCE MARKERS ARE USED ON THE ROUTE, OMIT DELINEATORS BETWEEN INTERCHANGES.

GENERAL NOTES:

THE CONTRACT UNIT PRICE FOR EACH CHANNEL POST DELINEATOR SHALL INCLUDE THE REFLECTOR, FASTENERS AND POST.


MISSOURI HIGHWAYS AND TRANSPORTATION COMMISSION
105 WEST CAPITOL
JEFFERSON CITY, MO 65102
1-888-ASK-MODOT (1-888-275-6636)


STATE OF MISSOURI
KATHRYN PHILLIPS HARVEY
NUMBER PE-23751
PROFESSIONAL ENGINEER
THIS SHEET HAS BEEN SIGNED, SEALED AND DATED ELECTRONICALLY.

# SIGN MOUNTING DETAILS

CHANNEL POST DELINEATORS

DATE EFFECTIVE: 02/01/2012
DATE PREPARED: 12/19/2011

903.03BH

SHEET NO. 8 OF 11

IF A SEAL IS PRESENT ON THIS SHEET IT HAS BEEN ELECTRONICALLY SEALED AND DATED.

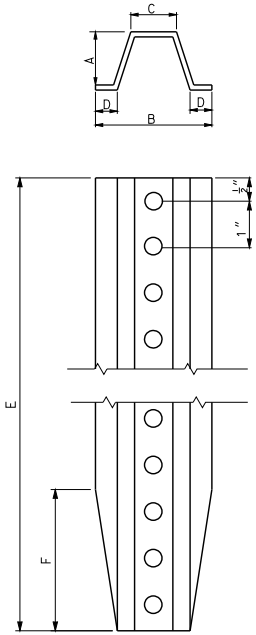


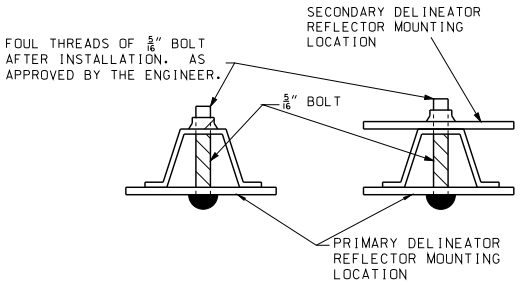


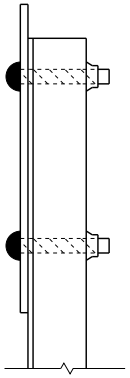

HOLE PUNCHING TO EQUAL 3/8" DIAMETER HOLES, ONE INCH CENTER TO CENTER, BEGINNING ONE-HALF INCH FROM THE END AND CONTINUING THE ENTIRE LENGTH OF THE POST.

| DELINEATOR POST | | | | | | | |
|---|---|---|---|---|---|---|---|
| LIMITS | LBS/FT (2) | DIMENSIONS – INCHES | | | | | |
| | | A | B | C | D | E | F |
| NOMINAL | 1.12 | 1 | 2 1/4 | 7/8 | 3/8 | 84 | 1 |
| TOLERANCE | ± 5% | ± 1/8 | ± 1/8 | ± 1/8 | ± 1/8 | ±1 | ± 1/4 |

(2) WEIGHT BEFORE GALVANIZING OR PUNCHING.

## DELINEATOR POST AND FASTENER DETAILS

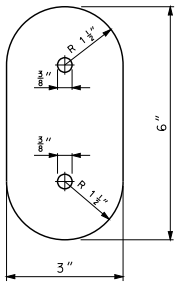


## CHANNEL POST DELINEATOR REFLECTOR

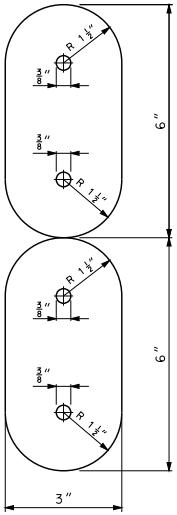


## DOUBLE STACKED CHANNEL POST DELINEATOR REFLECTOR

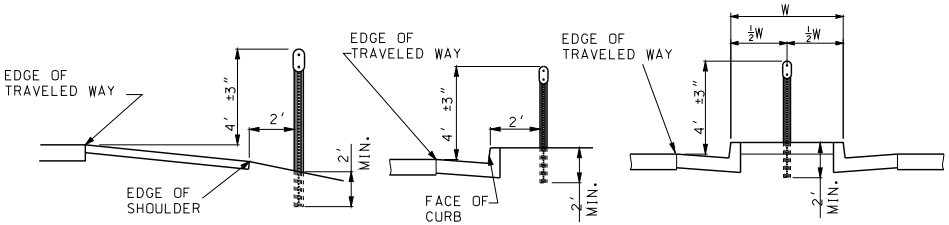


SHOULDER MOUNTED

OUTSIDE BARRIER CURB

NARROW PAVED MEDIAN

## DELINEATOR MOUNTING DETAILS

IF A SEAL IS PRESENT ON THIS SHEET IT HAS BEEN ELECTRONICALLY SEALED AND DATED.


MISSOURI HIGHWAYS AND TRANSPORTATION COMMISSION
105 WEST CAPITOL
JEFFERSON CITY, MO 65102
1-888-ASK-MODOT (1-888-275-6636)


STATE OF MISSOURI
KATHRYN PHILLIPS HARVEY
NUMBER PE-23751
PROFESSIONAL ENGINEER
THIS SHEET HAS BEEN SIGNED, SEALED AND DATED ELECTRONICALLY.

# SIGN MOUNTING DETAILS

CHANNEL POST DELINEATORS

DATE EFFECTIVE: 02/01/2012
DATE PREPARED: 12/19/2011

903.03BH

SHEET NO. 9 OF 11

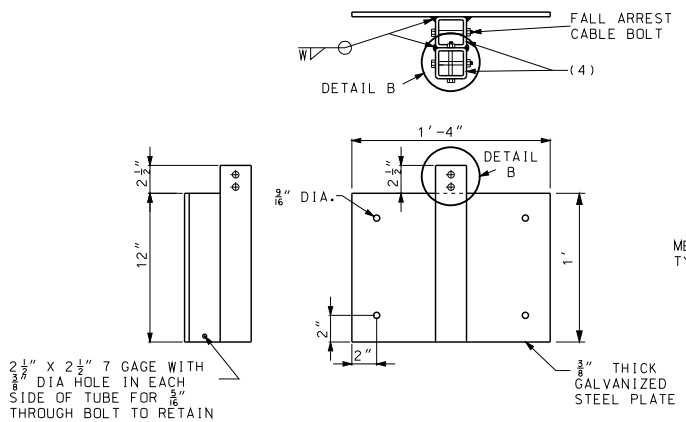


## MOUNTING PLATE DETAIL

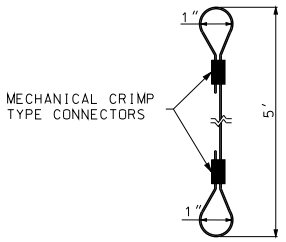


## FALL ARREST CABLE DETAIL

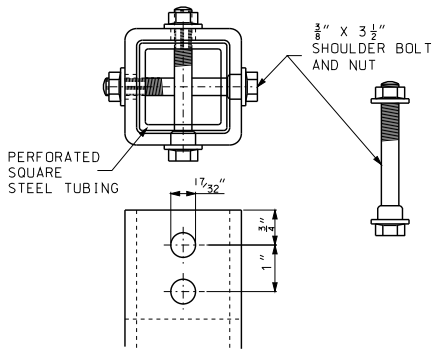


## DETAIL B SHOULDER BOLT

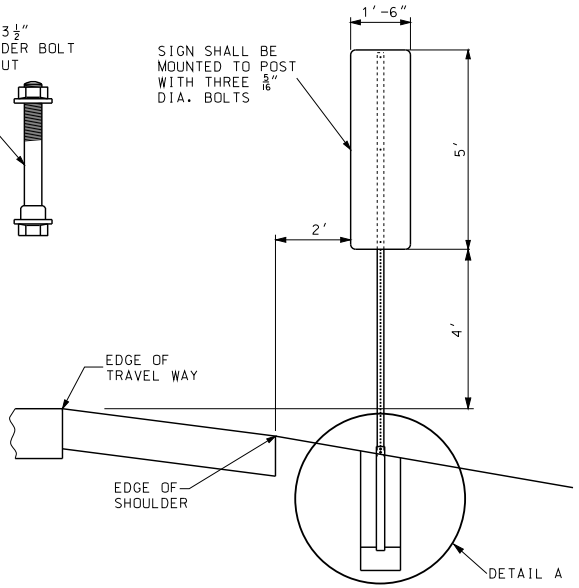


## GROUND INSTALLATION

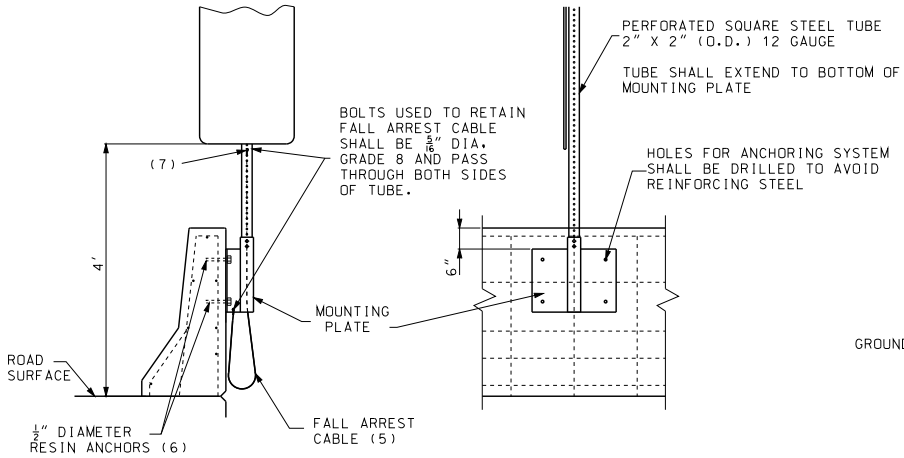


## BARRIER WALL INSTALLATION

(1) PERFORATED SQUARE STEEL TUBE 2" X 2" (O.D.) 12 GAUGE. TUBE SHALL EXTEND A MINIMUM OF 24" BELOW THE TOP OF THE FOUNDATION TUBE.

(2) TUBE TO EXTEND ABOVE FOUNDATION ONLY ENOUGH TO ALLOW BOLT TO BE INSERTED 2½" MAXIMUM.

(3) CONCRETE MIX TO HOLD FOUNDATION TUBE PLUMB WITH-OUT BRACING SHALL HAVE A MINIMUM OF 5.5 SACKS OF CEMENT PER CUBIC YARD AND A MAXIMUM SLUMP OF 2½".

(4) 2½" x 2½" (O.D.) SQUARE TUBE GALVANIZED 7 GAGE WITH TWO 17/32" DIAMETER HOLES IN EACH FACE ¾" BELOW TOP OF TUBE.

(5) ⅛"x 5' LONG STAINLESS STEEL CABLE (ASTM A 492 TYPE 304 MINIMUIM BREAKING STRENGTH 200 LBS.) WITH A 1" DIA. LOOP AT EACH END LOOPS FORMED BY MECHANICAL CRIMP TYPE CONNECTION PER MANUFACTURER'S SPECIFICATIONS. CABLE IS TO BE RUN INSIDE PERFORATED SQUARE STEEL TUBE. CABLE ISTO BE USED ONLY WHEN SIGN MOUNTING LOCATION IS OVER ANOTHER TRAVELWAY.

(6) ½" DIAMETER RESIN ANCHORS SHALL BE INSTALLED IN ACCORDANCE WITH STANDARD SPECIFICATIONS (SEC 1039). AN APPROVED MAECHANICAL TYPE ANCHOR MAY BE USED IF THE DEVICE EQUALS OR EXCEEDS THE PULL TEST REQUIREMENTS OF SEC. 1039.

(7) FALL ARREST CABLE TO BE SECURED TO NEXT FULL HOLE BELOW SIGN

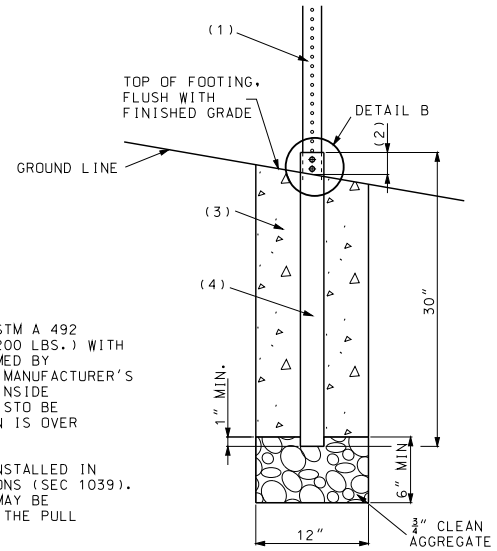


## DETAIL A

GENERAL NOTES:

PERFORATED SQUARE STEEL TUBE SHALL BE SECURED TO FOUNDATION TUBE OR BARRIER WALL MOUNTING PLATE WITH A SHOULDER BOLT PER PERFORATED SQUARE STEEL TUBE MANUFACTURER'S SPECIFICATION.

THE CONTRACT UNIT PRICE FOR REFERENCE MARKER SHALL INCLUDE SIGN PANEL, FASTENER, POST AND ALL MATERIAL CONTAINED IN THE FOUNDATION OR BARRIER WALL MOUNTING HARDWARE.

MISSOURI HIGHWAYS AND TRANSPORTATION COMMISSION
105 WEST CAPITOL
JEFFERSON CITY, MO 65102
1-888-ASK-MODOT (1-888-275-6636)

STATE OF MISSOURI
KATHRYN PHILLIPS HARVEY
NUMBER PE-23751
PROFESSIONAL ENGINEER
THIS SHEET HAS BEEN SIGNED, SEALED AND DATED ELECTRONICALLY.

# SIGN MOUNTING DETAILS

EMERGENCY REFERENCE MARKERS

DATE EFFECTIVE: 02/01/2012
DATE PREPARED: 12/19/2011

903.03BH

SHEET NO. 10 OF 11

IF A SEAL IS PRESENT ON THIS SHEET IT HAS BEEN ELECTRONICALLY SEALED AND DATED.

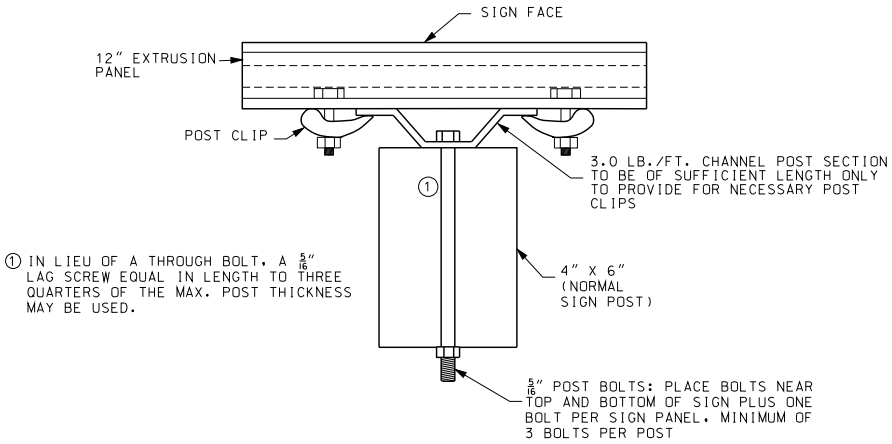


PLAN VIEW

## MOUNTING DETAILS FOR EXTRUDED PANELS ON WOOD 4" X 6" POST

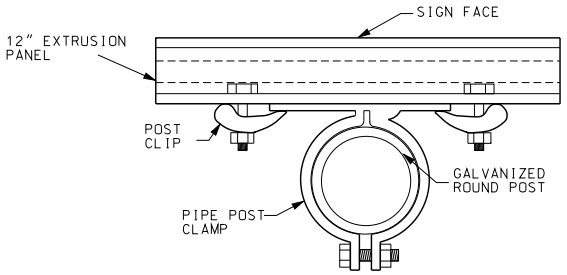


PLAN VIEW

## MOUNTING DETAILS FOR EXTRUDED PANELS ON ROUND PIPE POST

| NUMBER OF BOLTS TO ATTACH STEEL CHANNEL TO WOOD POST | |
|---|---|
| SIGN HEIGHT | NO. OF BOLTS* PER WOOD POST USED |
| 1' | 2 |
| 2' | 3 |
| 3' | 4 |
| 4' | 5 |
| 5' | 6 |
| 6' | 7 |
| 7' | 8 |

*LAG SCREWS MAY BE SUBSTITUTED

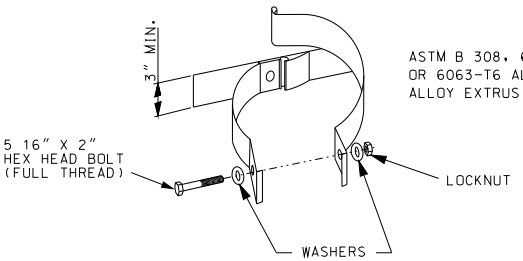


STAINLESS STEEL HARDWARE

## CLAMP TYPE SIGN SUPPORT FOR PIPE POST

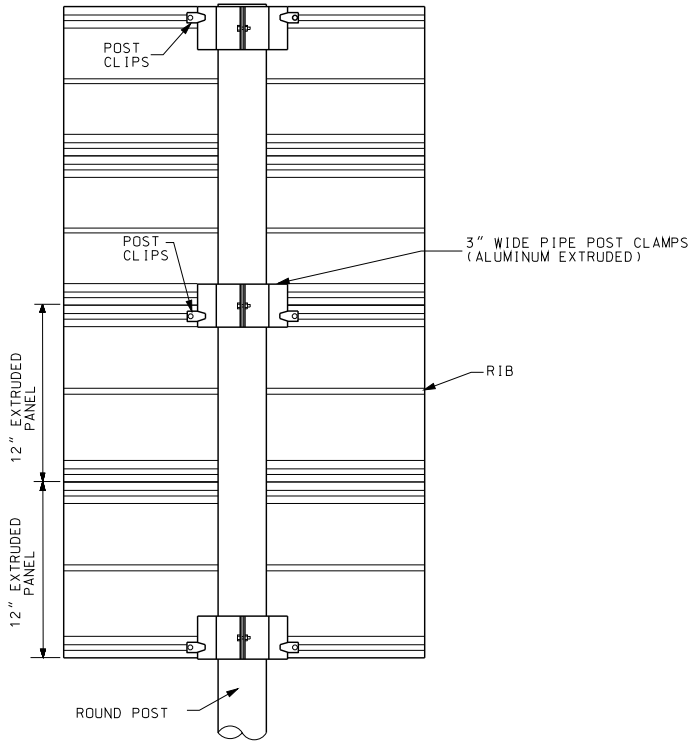


## TYPICAL POST CLIP MOUNTING DETAILS FOR ROUND PIPE POSTS

GENERAL NOTES:

IF A SEAL IS PRESENT ON THIS SHEET IT HAS BEEN ELECTRONICALLY SEALED AND DATED.

MISSOURI HIGHWAYS AND TRANSPORTATION COMMISSION
105 WEST CAPITOL
JEFFERSON CITY, MO 65102
1-888-ASK-MODOT (1-888-275-6636)

STATE OF MISSOURI
KATHRYN PHILLIPS HARVEY
NUMBER PE-23751
PROFESSIONAL ENGINEER
THIS SHEET HAS BEEN SIGNED, SEALED AND DATED ELECTRONICALLY.

# SIGN MOUNTING DETAILS

EXTRUDED PANEL ATTACHMENTS FOR SIGNS 30 SQ. FT. OR SMALLER

DATE EFFECTIVE: 02/01/2012
DATE PREPARED: 12/19/2011

903.03BH

SHEET NO. 11 OF 11

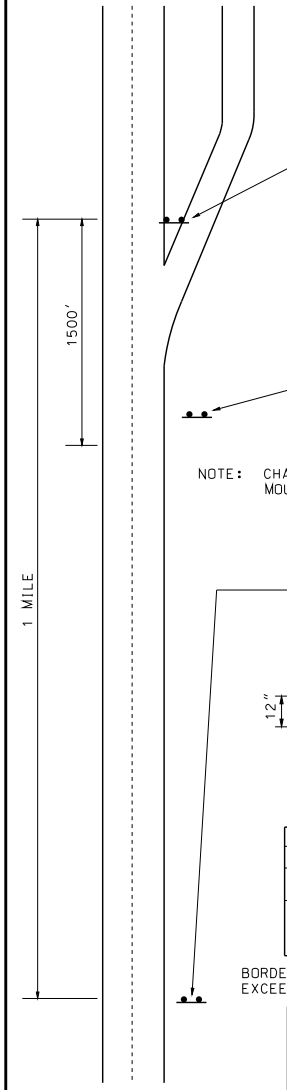


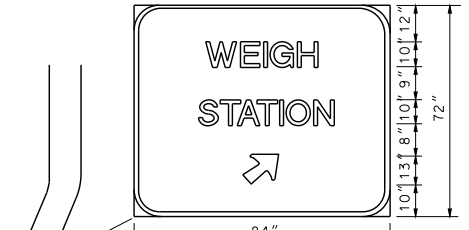


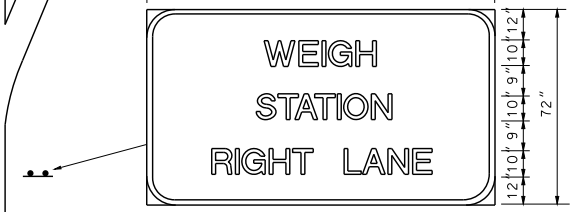


NOTE: CHANGEABLE "OPEN/CLOSE" AND "BUSES WEIGH" SIGNS MOUNTED BELOW THIS SIGN. SEE DETAILS THIS SHEET.

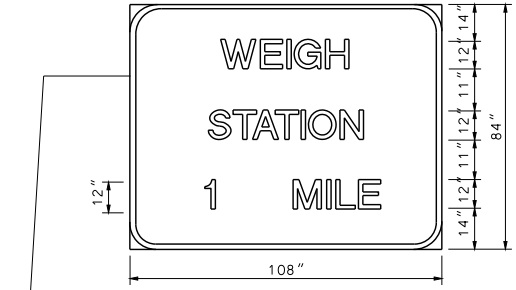


| BORDER | | | |
|---|---|---|---|
| CORNER RADII | | WIDTH | |
| MINIMUM SIGN DIM. | IN. | SIGN SIZE | IN. |
| 5' OR LESS | 6 | 6' x 10' OR LARGER | 2 |
| FROM 5' TO 7' | 9 | | |
| OVER 7' | 12 | LESS THAN 6' x 10' | 1⅛ |

BORDER WIDTH SHALL BE AS SHOWN ON CHART BUT NOT TO EXCEED THE STROKE WIDTH OF THE MAJOR LETTERING ON SIGN.

| GENERAL SIGN DATA | | | | |
|---|---|---|---|---|
| STR1L-3 | TYPE | REFLECTIVE SHEETING TYPE | COLOR | LETTER SERIES |
| BACKGROUND | | 1 | GREEN | |
| LEGEND | L-3 | 4 | WHITE | E |
| SYMBOLS | L-3 | 4 | WHITE | |
| BORDER | L-3 | 4 | WHITE | |
| SUBSTRATE | STRUCTURAL | | | |

## GUIDE SIGN DETAIL

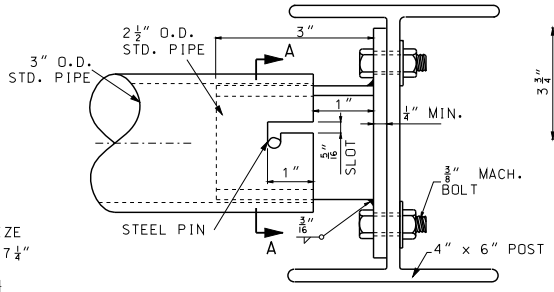


ASSEMBLY SHALL BE GALVANIZED AFTER FABRICATION

PLAN VIEW

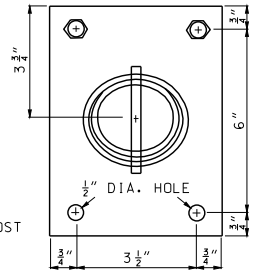


SECTION A-A

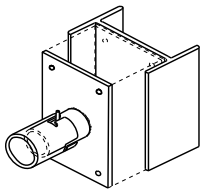

ISOMETRIC VIEW

## BUSES WEIGH MOUNTING ASSEMBLY

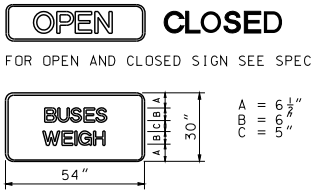


FOR OPEN AND CLOSED SIGN SEE SPECIAL PROVISIONS

MAXIMUM HEIGHT FROM BOTTOM OF BUSES WEIGH SIGN TO GROUND SHALL BE 60".

| GENERAL SIGN DATA | | | | |
|---|---|---|---|---|
| SHR1L-3 | TYPE | REFLECTIVE SHEETING TYPE | COLOR | LETTER SERIES |
| BACKGROUND | | 1 | GREEN | |
| LEGEND | L-3 | 4 | WHITE | E |
| SYMBOLS | | | | |
| BORDER | L-3 | 4 | WHITE | |
| SUBSTRATE | SHEET | | | |

## CHANGEABLE SIGN DETAIL

SUBSTRATE
ST STRUCTURAL
SH SHEET

LEGEND, SYMBOLS, & BORDER
L-1 SCREEN PRINT
L-3 DIRECT APPLIED (CUT FROM MATERIAL SHOWN ON PLANS.)

REFLECTIVE SHEETING
R1 ENGINEERING GRADE IN ACCORDANCE WITH SEC 1042.2.7.1
R4 PRISMATIC IN ACCORDANCE WITH SEC 1042.2.7.3

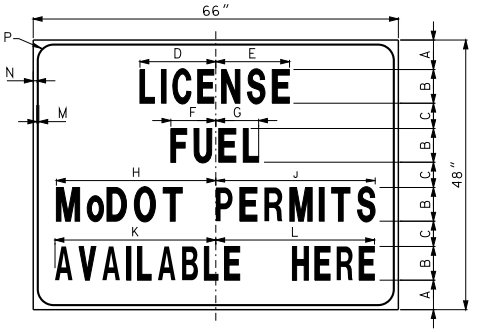


| SIGN | A | B | C | D | E | F | G | H | J | K | L | M | N | P |
|---|---|---|---|---|---|---|---|---|---|---|---|---|---|---|
| R21-1 | 5¼" | 6" | 4½" | 13½" | 13⅛" | 8" | 7⅝" | 28⅜" | 28⅜" | 28⅝" | 28¼" | ⅝" | ⅜" | 3" |

| GENERAL SIGN DATA | | | | |
|---|---|---|---|---|
| SHR1L-1 | TYPE | REFLECTIVE SHEETING TYPE | COLOR | LETTER SERIES |
| BACKGROUND | | 1 | WHITE | |
| LEGEND | L-1 | | BLACK | C |
| SYMBOLS | | | | |
| BORDER | L-1 | | BLACK | |
| SUBSTRATE | SHEET | | | |

## PERMIT SIGN DETAIL

| MATERIAL LIST | | |
|---|---|---|
| NO. | DESCRIPTION | LB. |
| 2 | ¼" STEEL PLATE | 2.26 |
| 1 | 3" STANDARD PIPE | 32.44 |
| 2 | 2-1/2" STANDARD PIPE | 3.89 |
| 8 | ⅜" GALV. MACH. BOLT | |
| 8 | GALV. WASHER | |

GENERAL NOTES:

DESIGN SPECS: AASHTO STANDARD SPECIFCATIONS FOR STRUCTURAL SUPPORTS FOR HIGHWAY SIGNS, LUMINARES, AND TRAFFIC SIGNALS - 1975.

MATERIALS AND FABRICATION SHALL CONFORM TO THE REQUIREMENTS OF THE STATE HIGHWAY AND TRANSPORTATION COMMISSION STANDARD SPECIFICATIONS AND PROVISIONS.

MISSOURI HIGHWAYS AND TRANSPORTATION COMMISSION
105 WEST CAPITOL
JEFFERSON CITY, MO 65102
1-888-ASK-MODOT (1-888-275-6636)

STATE OF MISSOURI
KATHRYN PHILLIPS HARVEY
NUMBER PE-23751
PROFESSIONAL ENGINEER
THIS SHEET HAS BEEN SIGNED, SEALED AND DATED ELECTRONICALLY.

# HIGHWAY SIGNING
WEIGH STATION

DATE EFFECTIVE: 02/01/2012
DATE PREPARED: 12/19/2011

903.04F

SHEET NO. 1 OF 1

IF A SEAL IS PRESENT ON THIS SHEET IT HAS BEEN ELECTRONICALLY SEALED AND DATED.

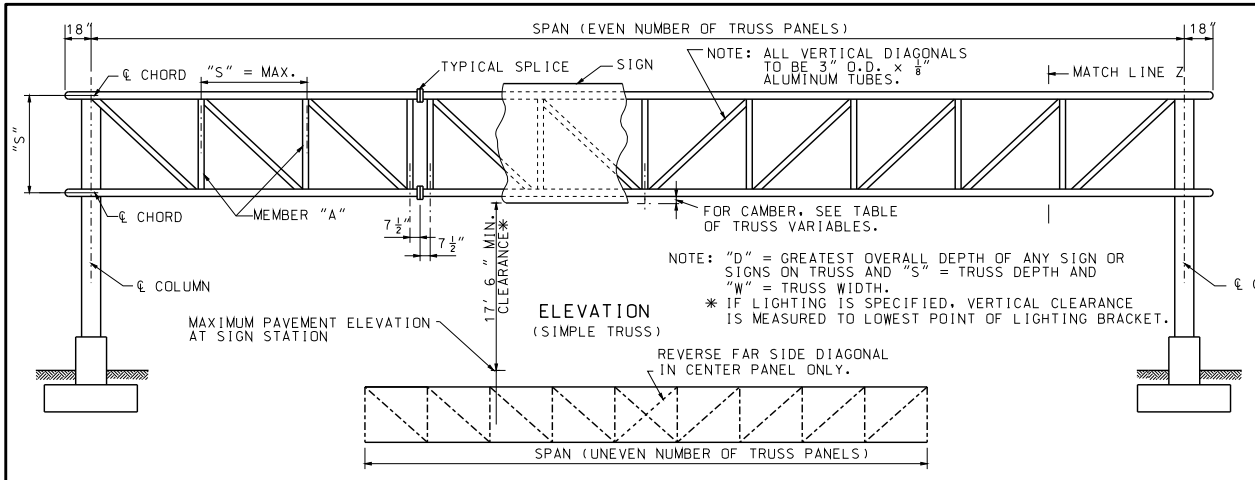


TRUSS ELEVATION

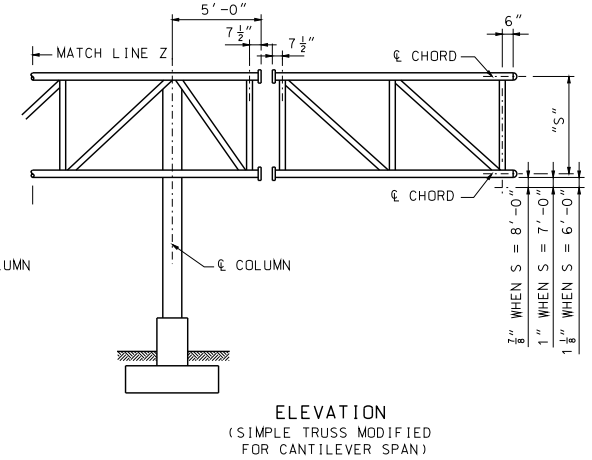


ELEVATION
(SIMPLE TRUSS MODIFIED FOR CANTILEVER SPAN)

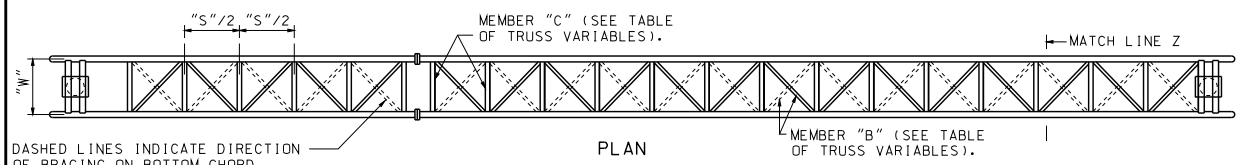


PLAN

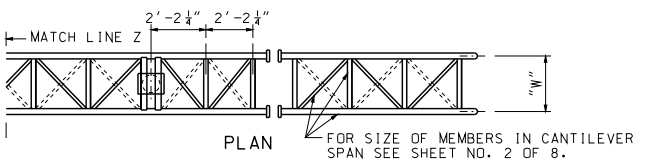


PLAN

FOR SIZE OF MEMBERS IN CANTILEVER SPAN SEE SHEET NO. 2 OF 8.

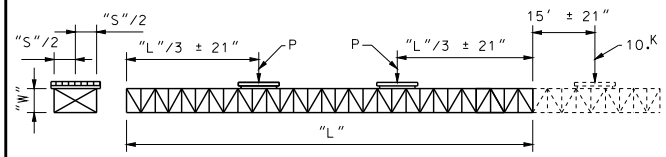


$P = \frac{84aW}{L} - 0.02\,L$ WHERE

- P = CONCENTRATED LOAD IN KIPS.
- a = AREA OF ONE CHORD TUBE IN SQUARE INCHES. (USE 0.76a FOR 4" DIA. x 1/4" AND 4 1/2" DIA. x 1/4" CHORDS)
- W = WIDTH OF TRUSS IN FEET.
- L = SPAN LENGTH IN FEET.

SAMPLE, GIVEN: a = 4.123 SQ. IN., W = 6'-0" AND L = 100'.

SOLUTION: $P = \frac{84 \times 4.123 \times 6.0}{100} - 0.02 \times 100 = 20.8 - 2 = 18.8$

NOTE:
IF CANTILEVERED, REMOVE CONCENTRATED LOAD NEAREST CANTILEVER END AND LOAD CANTILEVER SPAN AS SHOWN ABOVE.

15' OR LESS CANTILEVER SPANS NEED NOT BE TESTED.

REPEAT ABOVE TESTS BY ROTATING 180° (TO SIMULATE WIND REVERSAL). NO VERTICAL LOAD (D.L.) TEST WILL BE REQUIRED.

LOADS P SHALL NOT BE MORE THAN 16° FOR SPANS LESS THAN 55 FEET AND 20°. FOR ALL OTHERS.

## SIMULATED WIND-SHOP TEST LOADING

TRUSS VARIABLES

| SPAN | "S" | "W" | MEMBER "A" | MEMBER "B" | MEMBER "C" | SHOP CAMBER |
|---|---|---|---|---|---|---|
| UP TO 70'-6" | 6'-0" | 5'-0" | 2 1/2" DIA. x 1/8" | 2 1/2" DIA. x 1/8" | 1 3/4" DIA. x 1/8" | 3/4" |
| 71' TO 80'-6" | 6'-0" | 6'-0" | 2 1/2" DIA. x 1/8" | 2 1/2" DIA. x 1/8" | 2" DIA. x 1/8" | 1 1/4" |
| 81' TO 90'-6" | 6'-0" | 6'-0" | 2 1/2" DIA. x 1/8" | 2 3/4" DIA. x 1/8" | 2" DIA. x 1/8" | 1 1/2" |
| 91' TO 100'-6" | 6'-0" | 6'-0" | 2 1/2" DIA. x 1/8" | 2 3/4" DIA. x 1/8" | 2" DIA. x 1/8" | 2 1/4" |
| 101' TO 110'-6" | 7'-0" | 7'-0" | 2 1/2" DIA. x 1/8" | 3" DIA. x 1/8" | 2 1/4" DIA. x 1/8" | 2 1/2" |
| 111' TO 120'-6" | 7'-0" | 7'-0" | 2 1/2" DIA. x 1/8" | 3 1/2" DIA. x 1/8" | 2 1/4" DIA. x 1/8" | 2 3/4" |
| 121' TO 130'-6" | 7'-0" | 7'-0" | 3" DIA. x 1/8" | 3 1/2" DIA. x 1/8" | 2 1/4" DIA. x 1/8" | 3 3/4" |
| 131' TO 140'-6" | 8'-0" | 7'-0" | 3" DIA. x 1/8" | 3 3/4" DIA. x 1/8" | 2 1/2" DIA. x 1/8" | 3" |
| 141' TO 150'-6" | 8'-0" | 7'-0" | 3" DIA. x 1/8" | 3 3/4" DIA. x 1/8" | 2 3/4" DIA. x 1/8" | 3 3/4" |
| 151' TO 160'-6" | 8'-0" | 7'-0" | 3" DIA. x 1/8" | 3 3/4" DIA. x 1/8" | 2 3/4" DIA. x 1/8" | 4 1/2" |

NOTE:
FOR SIZE OF CHORD MEMBERS, SEE DATA SHEET. SHOP CAMBER MAY BE PARABOLIC OR STRAIGHT, BUT SHALL BE SYMMETRICAL ABOUT CENTERLINE OF SPAN.

GENERAL NOTES:

ALL STRUCTURAL STEEL AND COLUMN BASE PLATES ASTM A36.

ALL ANCHOR BOLTS ASTM A307.

PROPOSED FIELD SPLICES SHALL BE SHOWN ON SHOP DRAWINGS FOR APPROVAL OF THE ENGINEER.

TRUSSES SHALL BE FABRICATED WITH A MINIMUM OF SPLICING IN TRUSS CHORDS.

FIELD SPLICING WILL NOT BE PERMITTED WITHIN THE MIDDLE ONE-THIRD OF SPAN.

PERMISSIBLE VENT HOLES (MAXIMUM 1/8" DIAMETER) SHALL BE PLACED A MINIMUM OF

3" FROM WELD ON LOW SIDE OF HORIZONTAL, VERTICAL AND DIAGONAL TUBES.

FOR ADDITIONAL INFORMATION SEE DATA SHEET.

MISSOURI HIGHWAYS AND TRANSPORTATION COMMISSION
105 WEST CAPITOL
JEFFERSON CITY, MO 65102
1-888-ASK-MODOT (1-888-275-6636)

STATE OF MISSOURI
KATHRYN PHILLIPS HARVEY
NUMBER PE-23751
PROFESSIONAL ENGINEER
THIS SHEET HAS BEEN SIGNED, SEALED AND DATED ELECTRONICALLY.

# OVERHEAD SIGN TRUSSES

ALUMINUM

DATE EFFECTIVE: 10/01/2011
DATE PREPARED: 9/30/2011

903.10BB

SHEET NO. 1 OF 6

IF A SEAL IS PRESENT ON THIS SHEET IT HAS BEEN ELECTRONICALLY SEALED AND DATED.

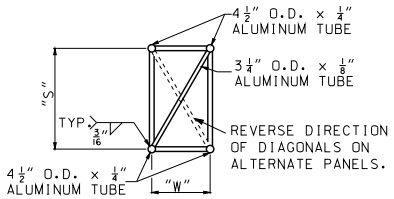


SECTION A-A

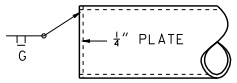


DETAIL OF ALTERNATE END CAP

NOTE:
WHEN THE VERTICALS, STRUTS AND SWAYS OBSTRUCT THE PLACING OF BOLTS IN THE FLANGES THESE MEMBERS MAY BE MOVED BACK IN ORDER TO CLEAR THE BOLTS. (ONE SIDE OF SPLICE ONLY).

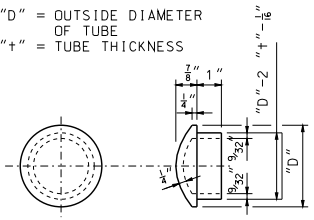


DETAIL OF END CAP CASTING
(DRIVE FIT TYPE)

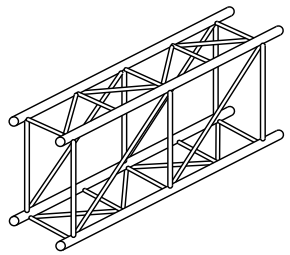

TYPICAL ISOMETRIC VIEW OF TRUSS

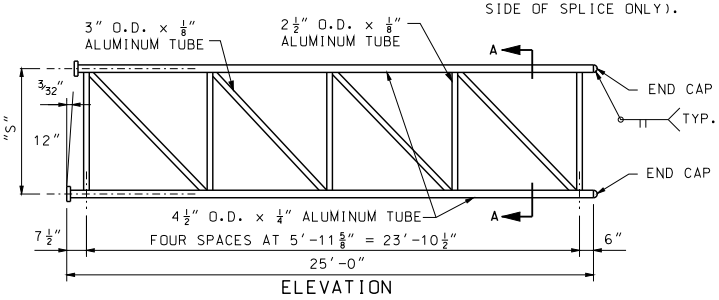


ELEVATION

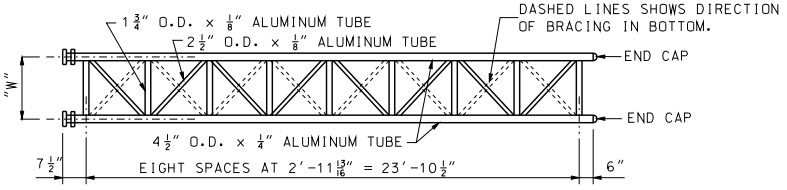


PLAN

## 25' - CANTILEVER SECTIONS

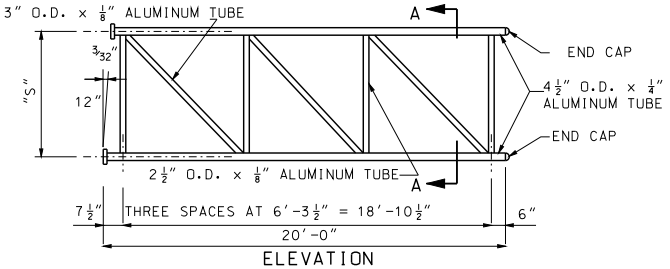


ELEVATION

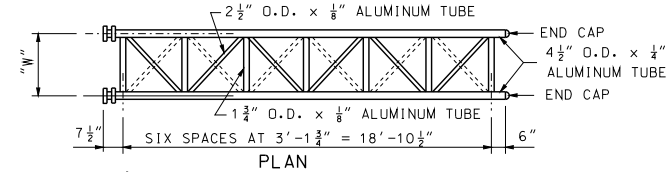


PLAN

## 20' - CANTILEVER SECTIONS

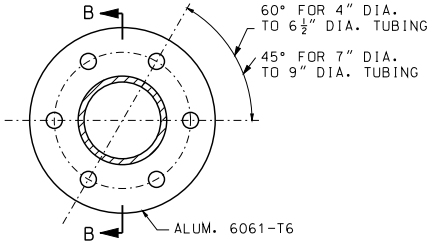


PLAN OF FLANGE PLATE

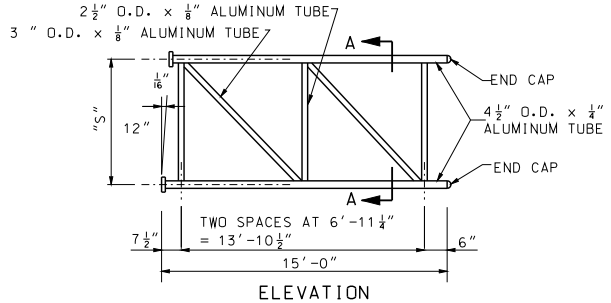


ELEVATION

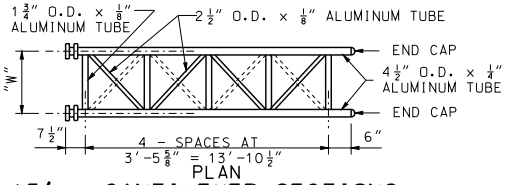


PLAN

## 15' - CANTILEVER SECTIONS

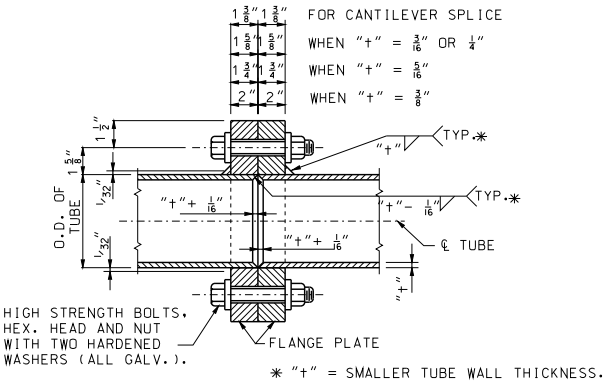


* "t" = SMALLER TUBE WALL THICKNESS.

SECTION B-B

NOTE:
A WELDING SEQUENCE ASSURING FULL CONTACT OF FLANGE FACES SHALL BE REQUIRED. DRILL OR REAM FLANGE HOLES 1/16" LARGER THAN NORMAL DIAMETER OF BOLTS OR TUBING.

| TUBE SIZE | BOLT NO. AND DIA. | TORQUE |
|---|---|---|
| 4" DIA. TO ALL DIAMETERS | 6- ¾" DIA. | 320 FT.LB. OR ONE-HALF TURN |
| 4½" DIA. THROUGH 6½" DIA. | 6- ¾" DIA. | 320 FT.LB. OR ONE-HALF TURN |
| 7" DIA. THROUGH 7½" DIA. | 8- ¾" DIA. | 320 FT.LB. OR ONE-HALF TURN |
| 8" DIA. THROUGH 9" DIA. | 8- ⅞" DIA. | 470 FT.LB. OR ONE-HALF TURN |

MISSOURI HIGHWAYS AND TRANSPORTATION COMMISSION
105 WEST CAPITOL
JEFFERSON CITY, MO 65102
1-888-ASK-MODOT (1-888-275-6636)

STATE OF MISSOURI
KATHRYN PHILLIPS HARVEY
NUMBER PE-23751
PROFESSIONAL ENGINEER
THIS SHEET HAS BEEN SIGNED, SEALED AND DATED ELECTRONICALLY.

# OVERHEAD SIGN TRUSSES

ALUMINUM

DATE EFFECTIVE: 10/01/2011
DATE PREPARED: 9/30/2011

903.10BB

SHEET NO. 2 OF 6

IF A SEAL IS PRESENT ON THIS SHEET IT HAS BEEN ELECTRONICALLY SEALED AND DATED.

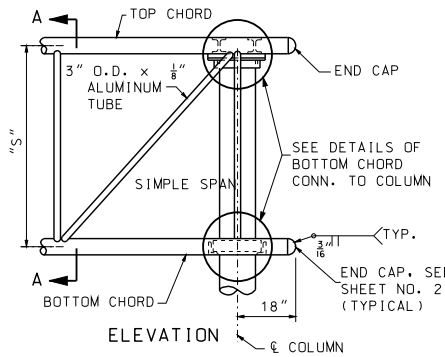


ELEVATION

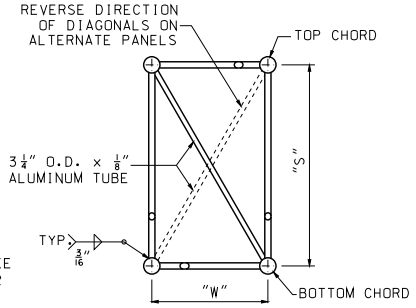


SECTION A-A

NOTE:
FOR DIMENSIONS "S" AND "W" SEE SHEET NO. 1.

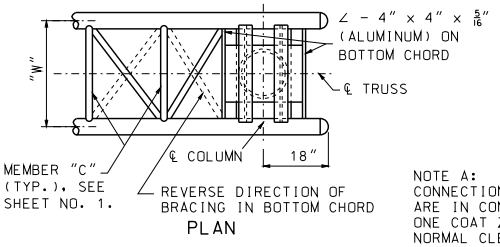


PLAN

## TRUSS END WITHOUT CANTILEVER

NOTE A:
CONNECTIONS IN WHICH STEEL AND ALUMINUM ARE IN CONTACT SHALL BE PROTECTED AS FOLLOWS: ONE COAT ZINC CHROMATE ON ALUMINUM SURFACES. NORMAL CLEANING AND PAINTING ON STEEL SURFACES. NO ZINC CHROMATE REQUIRED IF STEEL IS GALVANIZED.

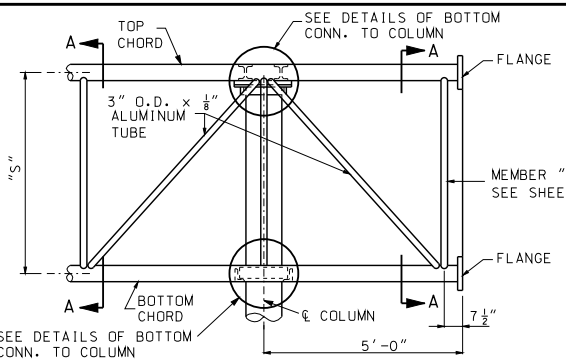


ELEVATION

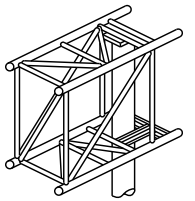

## TYPICAL ISOMETRIC VIEW OF END SECTION

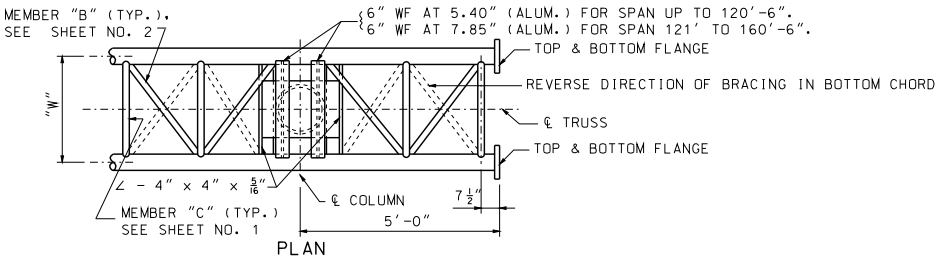


PLAN

## TRUSS END MODIFIED FOR CANTILEVER

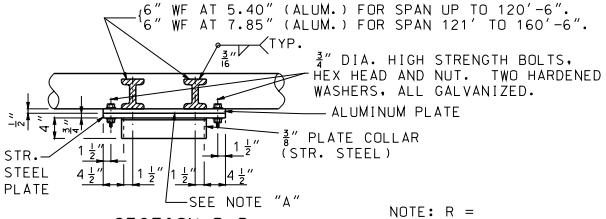


SECTION B-B

NOTE: R = O.D. PIPE COL. / 2 + 1/16"

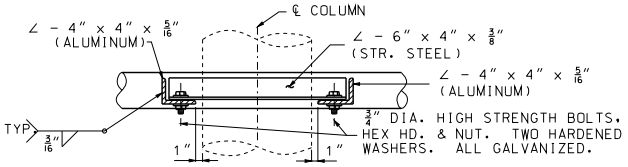


SECTION C-C

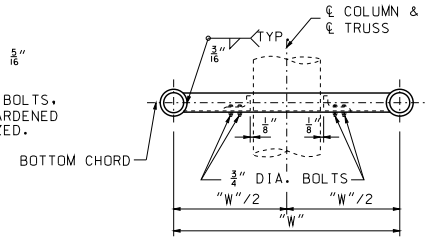


END ELEVATION

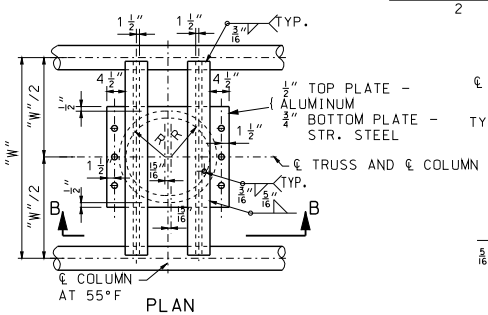


PLAN

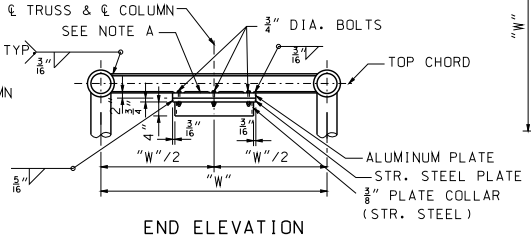


END ELEVATION

## DETAIL OF TOP CHORD CONNECTION TO COLUMN

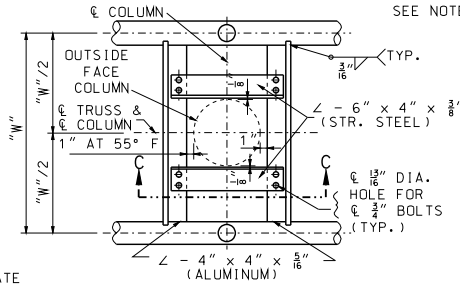


PLAN

## DETAILS OF BOTTOM CHORD CONNECTION TO COLUMN

MISSOURI HIGHWAYS AND TRANSPORTATION COMMISSION
105 WEST CAPITOL
JEFFERSON CITY, MO 65102
1-888-ASK-MODOT (1-888-275-6636)

STATE OF MISSOURI
KATHRYN PHILLIPS HARVEY
NUMBER PE-23751
PROFESSIONAL ENGINEER
THIS SHEET HAS BEEN SIGNED, SEALED AND DATED ELECTRONICALLY.

# OVERHEAD SIGN TRUSSES

ALUMINUM

| DATE EFFECTIVE: | 10/01/2011 | 903.10BB | SHEET NO. 3 OF 6 |
|---|---|---|---|
| DATE PREPARED: | 9/30/2011 | | |

IF A SEAL IS PRESENT ON THIS SHEET IT HAS BEEN ELECTRONICALLY SEALED AND DATED.

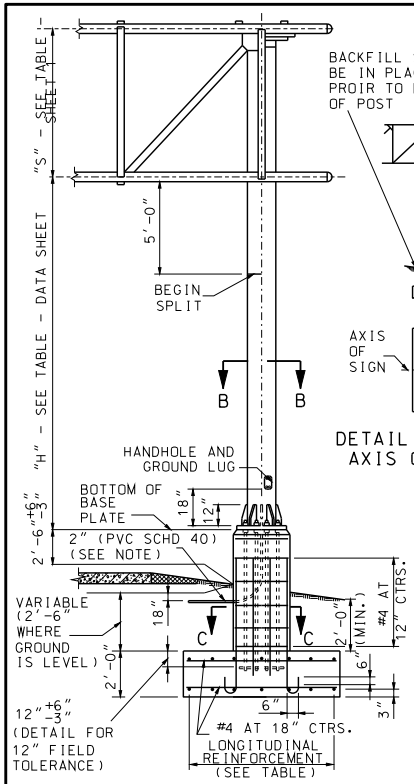


## ELEVATION

NOTE:
THE 2" CONDUIT IN THE CONCRETE PEDESTAL SHALL BE PVC SCHEDULE 40 AND SHALL BE PLACED WITH A MINUMUM RADIUS BEND OF 9½".




DETAIL SHOWING AXIS OF SIGN

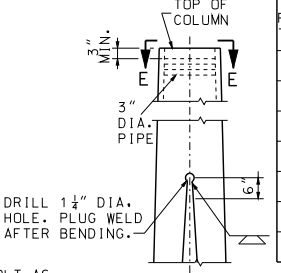


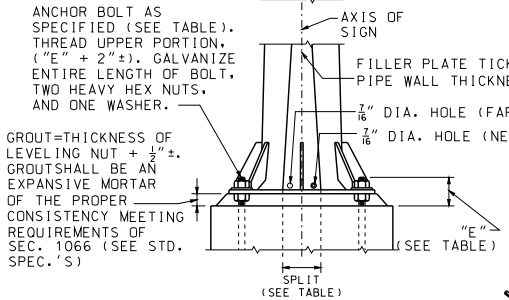


PART ELEVATION

| POST TYPE | PIPE COLUMN | DIMENSION "E" | SPLIT | BASE PLATE SIZE* | ANCHOR BOLTS DIA. | PEDESTAL SIZE* a | PEDESTAL SIZE* b | FOOTING SIZE* | LONGITUDINAL FOOTING REINFORCEMENT TOP | LONGITUDINAL FOOTING REINFORCEMENT BOTTOM | CONCRETE C.Y. |
|---|---|---|---|---|---|---|---|---|---|---|---|
| I | 12" STD. AT 65.42 | 8½" | 6" | 2'-6"x 23"x 1½" | 6 AT 2¼" | 4'-0" | 2'-11" | 7'-0"x 14'-6" | 7-#5 BARS | 7-#6 BARS | 10.9 |
| II | 14" O.D. AT 72.09 | 8½" | 9½" | 3'-0"x 2'-0"x 1½" | 6 AT 2¼" | 4'-4" | 3'-0" | 8'-0"x 16'-0" | 8-#5 BARS | 9-#6 BARS | 13.2 |
| III | 16" O.D. AT 82.77 | 8¾" | 11½" | 3'-4"x 2'-2"x 1¾" | 6 AT 2¼" | 4'-8" | 3'-2" | 8'-6"x 17'-6" | 9-#5 BARS | 9-#7 BARS | 15.2 |
| IV | 18" O.D. AT 93.45 | 9½" | 12½" | 3'-7"x 2'-4"x 2" | 6 AT 2½" | 5'-1" | 3'-4" | 9'-6"x 19'-0" | 10-#5 BARS | 10-#8 BARS | 18.1 |
| V | 20" O.D. AT 104.13 | 9½" | 13" | 3'-10"x 2'-9"x 2" | 8 AT 2½" | 5'-4" | 3'-9" | 10'-0"x 20'-0" | 10-#5 BARS | 10-#8 BARS | 20.6 |
| VI | 24" O.D. AT 125.49 | 9½" | 10½" | 4'-0"x 3'-3"x 2" | 8 AT 2½" | 5'-6" | 4'-3" | 10'-6"x 21'-0" | 11-#5 BARS | 11-#8 BARS | 23.3 |
| VII | 24" O.D. AT 125.49 | 9½" | 13½" | 4'-3"x 3'-3"x 2" | 8 AT 2½" | 5'-9" | 4'-3" | 11'-0"x 22'-0" | 11-#5 BARS | 11-#9 BARS | 25.1 |

* BASE PLATES, PEDESTAL, AND FOOTINGS, LONGER SIDES SHALL BE NORMAL TO AXIS OF SIGN.

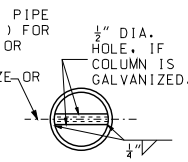


PART SECTION E-E

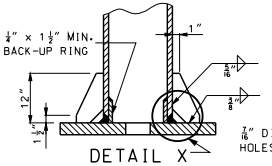


PART SECTION A-A

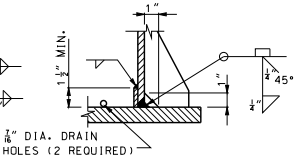


DETAIL X

GENERAL NOTES:

A TAPERED TUBE OF EQUIVALENT SIZE AND THICKNESS MAY BE SUBSTITUTED FOR PIPE POST.

ALL STEEL PIPE COLUMNS SHALL BE EITHER GRADE "B" SEAMLESS STEEL PIPE OR GRADE "B" ELECTRIC RESISTANCE WELDED STEEL PIPE; A.S.T.M. SPECIFICATION A53. NO OBJECTIONABLE SEAMS WILL BE PERMITTED.

ALL STRUCTURES SHALL BE GROUNDED.

BURR THREADS ON ALL ANCHOR BOLTS.

A HORIZONTAL WELDED SPLICE MAY BE FABRICATED IN THE COLUMN BETWEEN THE TOP OF PIPE AND 4'-0" BELOW THE BOTTOM CHORDS OF THE TRUSS WHEN DETAILED ON THE PIPE AND 4'-0" BELOW THE BOTTOM CHORDS OF THE TRUSS WHEN DETAILED ON THE SHOP DRAWINGS AND APPROVED BY THE ENGINEER.

GROUND LUGS SHALL BE LOCATED INSIDE COLUMN NEAR HAND HOLE.

QUANTITIES FOR PEDESTAL, BASED ON NOMINAL HEIGHT OF 5'-0".

QUANTITIES FOR FOOTING, BASED ON NOMINAL DEPTH OF 2'-0".

QUANTITIES SHOWN ARE FOR ONE COLUMN ONLY.

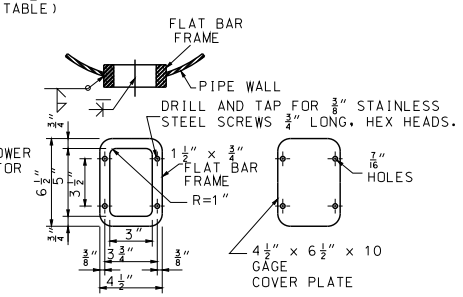


HANDHOLE AND COVER DETAIL

NOTE: HANDHOLE REQUIRED ONLY IN POWER COLUMN.

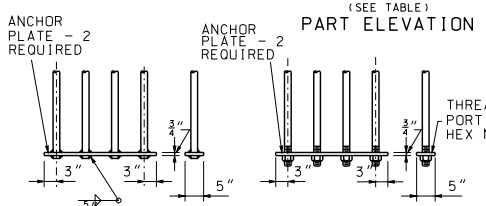


ANCHORAGE DETAIL A

ANCHORAGE DETAIL B (OPTIONAL)

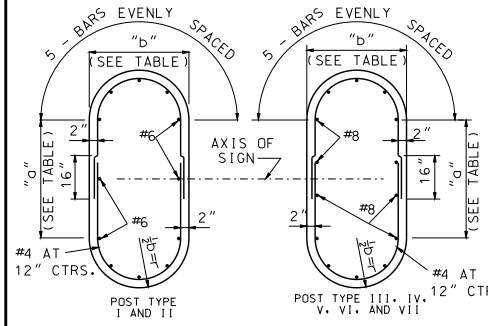


SECTION C-C
(TYPICAL SECTION SHOWING REINFORCING STEEL)
NOTE: FOR DETAILS OF ALTERNATE PEDESTAL, SEE SHEET NO. 5 OF 6.

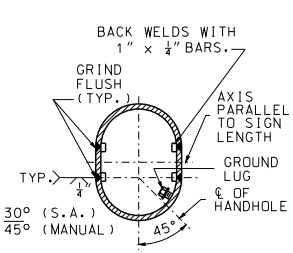


SECTION B-B
(FOR SPLIT COLUMNS ONLY)

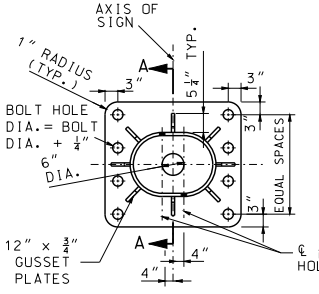


8 ANCHOR TYPE

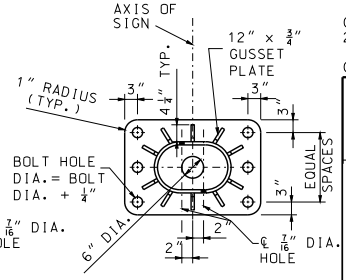


6 ANCHOR TYPE

TYPICAL BASE PLATES

MISSOURI HIGHWAYS AND TRANSPORTATION COMMISSION
105 WEST CAPITOL
JEFFERSON CITY, MO 65102
1-888-ASK-MODOT (1-888-275-6636)

STATE OF MISSOURI
KATHRYN PHILLIPS HARVEY
NUMBER PE-23751
PROFESSIONAL ENGINEER
THIS SHEET HAS BEEN SIGNED, SEALED AND DATED ELECTRONICALLY.

# OVERHEAD SIGN TRUSSES

ALUMINUM

DATE EFFECTIVE: 10/01/2011
DATE PREPARED: 9/30/2011

903.10BB

SHEET NO. 4 OF 6

IF A SEAL IS PRESENT ON THIS SHEET IT HAS BEEN ELECTRONICALLY SEALED AND DATED.

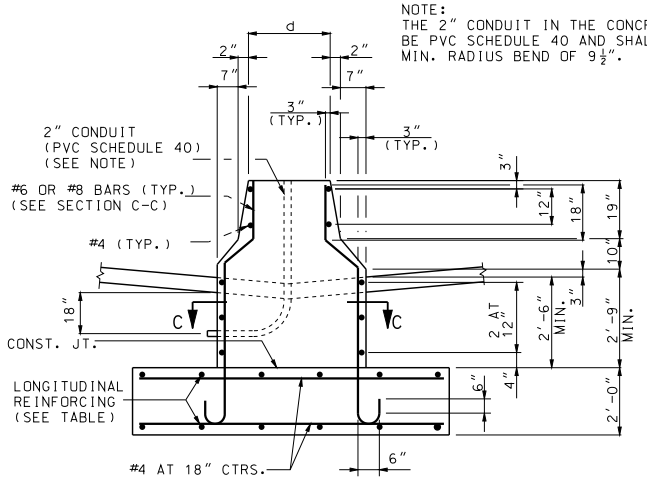


PART ELEVATION
(TYPE A CONCRETE TRAFFIC BARRIER)

| POST TYPE | PIPE COLUMN | PEDESTAL SIZE * | | FOOTING SIZE * | LONGITUDINAL FOOTING REINFORCEMENT | | CONCRETE C.Y. | |
|---|---|---|---|---|---|---|---|---|
| | | c | d | | TOP | BOTTOM | TYPE A MEDIAN BARRIER | TYPE C MEDIAN BARRIER |
| I | 12" STD. AT 65.42 | 5'-9" | 2'-1" | 7'-0" x 14'-6" | 7 - #5 BARS | 7 - #6 BARS | 10.9 | 11.6 |
| II | 14" O.D. AT 72.09 | 6'-2" | 2'-2" | 8'-0" x 16'-0" | 8 - #5 BARS | 9 - #6 BARS | 13.2 | 14.0 |
| III | 16" O.D. AT 82.77 | 6'-7" | 2'-4" | 8'-6" x 17'-6" | 9 - #5 BARS | 9 - #7 BARS | 15.2 | 16.1 |
| IV | 18" O.D. AT 93.45 | 7'-1" | 2'-6" | 9'-6" x 19'-0" | 10 - #5 BARS | 10 - #8 BARS | 18.1 | 19.1 |
| V | 20" O.D. AT 104.13 | 7'-8" | 2'-11" | 10'-0" x 20'-0" | 10 - #5 BARS | 10 - #8 BARS | 20.6 | 21.7 |
| VI | 24" O.D. AT 125.49 | 8'-3" | 3'-5" | 10'-6" x 21'-0" | 11 - #5 BARS | 11 - #8 BARS | 23.3 | 24.6 |
| VII | 24" O.D. AT 125.49 | 8'-6" | 3'-5" | 11'-0" x 22'-0" | 11 - #5 BARS | 11 - #9 BARS | 25.1 | 26.5 |

* BASE PLATES, PEDESTAL, AND FOOTINGS LONGER SIDES SHALL BE NORMAL TO AXIS OF SIGN.

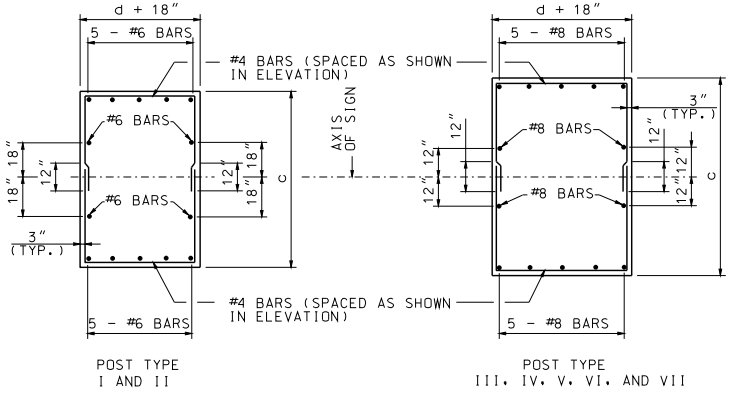


POST TYPE I AND II

POST TYPE III, IV, V, VI, AND VII

SECTION C-C

TYPICAL SECTION SHOWING REINFORCING STEEL

NOTE:
THE 2" CONDUIT IN THE CONCRETE PEDESTAL SHALL BE PVC SCHEDULE 40 AND SHALL BE PLACED WITH A MIN. RADIUS BEND OF 9½".

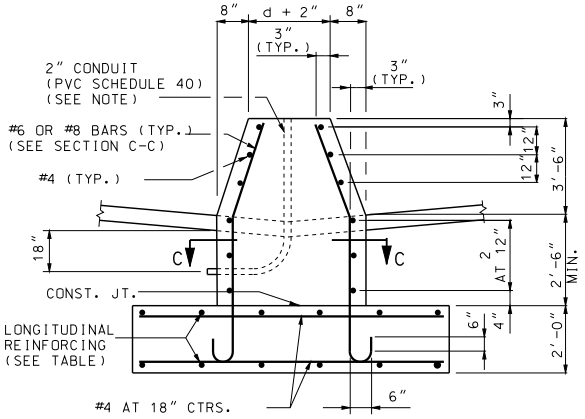


PART ELEVATION
(TYPE C CONCRETE TRAFFIC BARRIER)

## DETAILS OF ALTERNATE PEDESTAL

(TO BE USED ADJACENT TO TYPE "A" OR "C" MEDIAN BARRIER)

GENERAL NOTES:

A TAPERED TUBE OF EQUILVALENT SIZE AND THICKNESS MAY BE SUBSTITUTED FOR PIPE POST.

ALL STEEL PIPE COLUMNS SHALL BE EITHER GRADE "B" SEAMLESS STEEL PIPE OR GRADE "B" ELECTRIC RESISTANCE WELDED STEEL PIPE: A.S.T.M. SPECIFICATION A53.

NO OBJECTIONABLE SEAMS WILL BE PERMITTED.

ALL STRUCTURES SHALL BE GROUNDED.

BURR THREADS ON ALL ANCHOR BOLTS.

PIPE COLUMN, BASE PLATE, ANCHOR BOLTS AND NOTES PERTAINING TO THESE ITEMS HAVE BEEN OMITTED FOR CLARITY. REFER TO SHEET NO. 4 OF 6 FOR DETAILS OF THESE ITEMS.

GROUND LUGS SHALL BE LOCATED INSIDE COLUMN NEAR HAND HOLE.

QUANTITIES FOR PEDESTAL, BASED ON NOMINAL HEIGHT OF 5'-2" (TYPE A MEDIAN BARRIER) OR 6'-0" (TYPE C MEDIAN BARRIER).

QUANTITIES FOR FOOTING, BASED ON NOMINAL DEPTH OF 2'-0".

QUANTITIES SHOWN ARE FOR ONE COLUMN ONLY.

MISSOURI HIGHWAYS AND TRANSPORTATION COMMISSION
105 WEST CAPITOL
JEFFERSON CITY, MO 65102
1-888-ASK-MODOT (1-888-275-6636)

STATE OF MISSOURI
KATHRYN PHILLIPS HARVEY
NUMBER PE-23751
PROFESSIONAL ENGINEER
THIS SHEET HAS BEEN SIGNED, SEALED AND DATED ELECTRONICALLY.

# OVERHEAD SIGN TRUSSES

ALUMINUM

DATE EFFECTIVE: 10/01/2011
DATE PREPARED: 9/30/2011

903.10BB

SHEET NO. 5 OF 6

IF A SEAL IS PRESENT ON THIS SHEET IT HAS BEEN ELECTRONICALLY SEALED AND DATED.

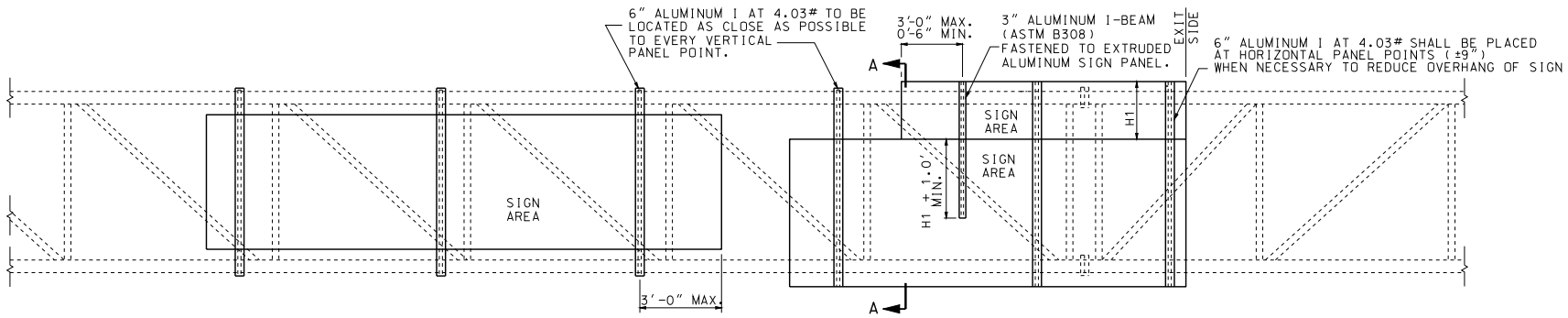


## TYPICAL ELEVATION OF SIGN COMPONENTS

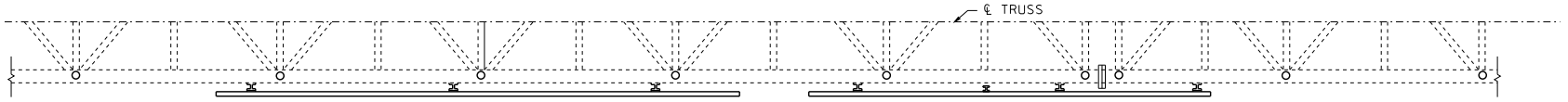


## TYPICAL HALF PLAN OF SIGN COMPONENTS

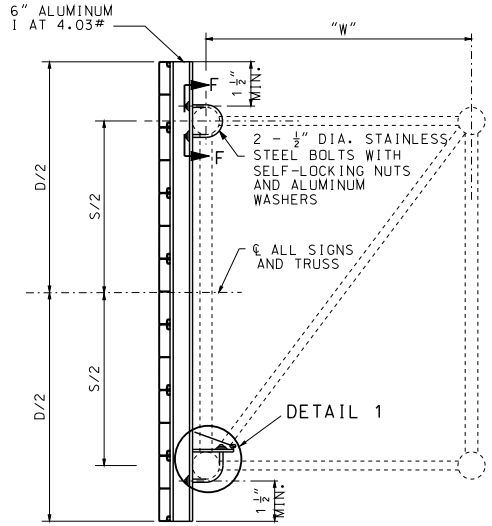


SECTION A-A

## TYPICAL SECTION OF SIGN SUPPORT

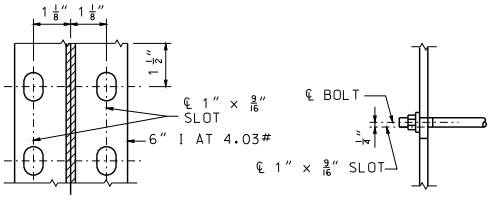


SECTION F-F




DETAIL 2

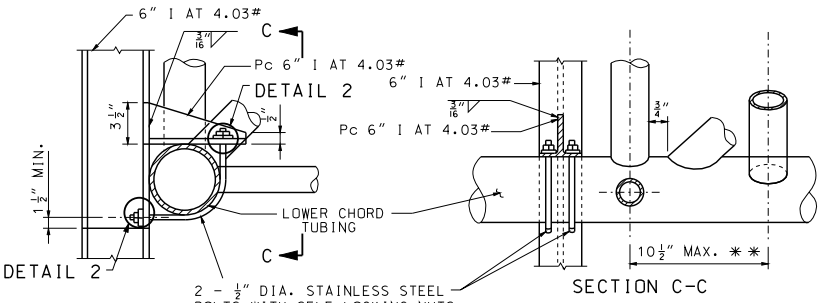


DETAIL 1

SECTION C-C

** LOCATE THE INTERIOR DIAGONAL AS CLOSE AS POSSIBLE TO THE CENTERLINE OF THE PANEL POINT WITHOUT OVER-LAPPING WELDS.

GENERAL NOTES:

EXIT NO. PANELS SHALL BE MOUNTED FLUSH WITH THE EXIT SIDE OF THE GUIDE SIGN.

ALL SIGNS SHALL BE CENTERED VERTICALLY ABOUT THE HORIZONTAL ℄ OF THE TRUSS.

SEE STD. PLAN 903.09 FOR LIGHTING DETAILS IF LIGHTING THE SIGN IS NECESSARY.

SEE STD. PLAN 903.03 FOR SIGN MOUNTING DETAILS.

ALL MATERIAL ALUMINUM EXCEPT AS NOTED.

MISSOURI HIGHWAYS AND TRANSPORTATION COMMISSION
105 WEST CAPITOL
JEFFERSON CITY, MO 65102
1-888-ASK-MODOT (1-888-275-6636)

STATE OF MISSOURI
KATHRYN PHILLIPS HARVEY
NUMBER PE-23751
PROFESSIONAL ENGINEER
THIS SHEET HAS BEEN SIGNED, SEALED AND DATED ELECTRONICALLY.

# OVERHEAD SIGN TRUSSES

ALUMINUM

DATE EFFECTIVE: 10/01/2011
DATE PREPARED: 9/30/2011

903.10BB

SHEET NO. 6 OF 6

IF A SEAL IS PRESENT ON THIS SHEET IT HAS BEEN ELECTRONICALLY SEALED AND DATED.

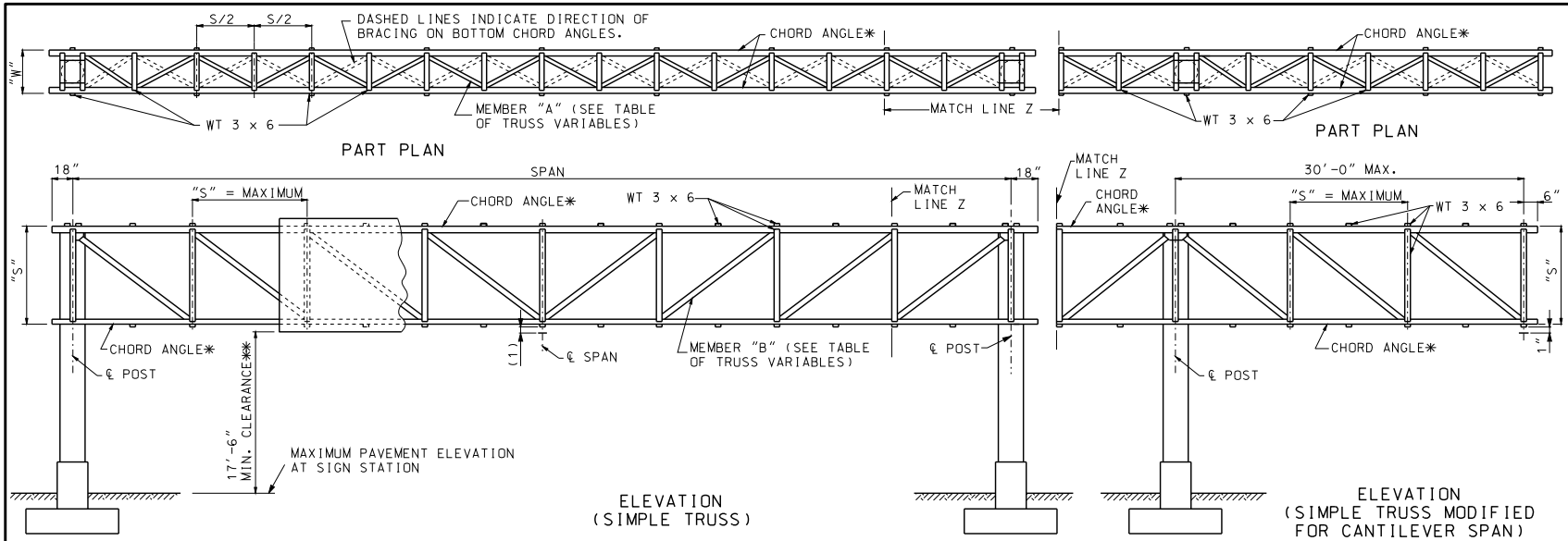


NOTES:

SHOP SPLICES ON CHORD ANGLES WILL BE ALLOWED ONLY BY SPECIAL PERMISSION. IF PERMISSION IS GRANTED, SUCH SPLICES MUST BE LOCATED AT THE CENTERLINE OF MAIN PANEL POINTS.

"D" = GREATEST OVERALL DEPTH OF ANY SIGN OR SIGNS ON TRUSS AND
"S" = TRUSS DEPTH, AND
"W" = TRUSS WIDTH.

¾" DIA. BOLTS SHALL BE REMOVED AFTER WELDING IS COMPLETE. BOLT HOLES SHALL BE PLUGGED AND THE OUTSIDE FACE GROUND SMOOTH.

* SEE GENERAL NOTES THIS SHEET FOR CHARPY V-NOTCH REQUIREMENTS.

** IF LIGHTING IS SPECIFIED, VERTICAL CLEARANCE IS MEASURED TO LOWEST POINT OF LIGHTING BRACKET.

(1) FOR PARABOLIC CAMBER SEE TABLE OF TRUSS VARIABLES

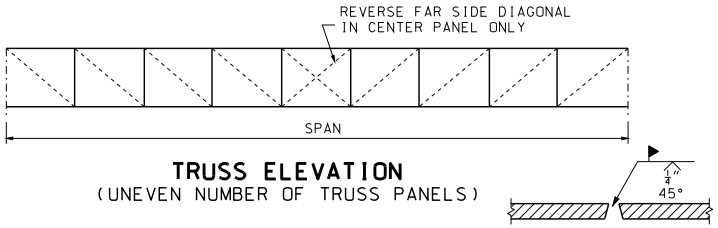


**TRUSS ELEVATION**
(UNEVEN NUMBER OF TRUSS PANELS)




SECTION A-A

| TRUSS VARIABLES | | | | | |
|---|---|---|---|---|---|
| SPAN | "S" | "W" | MEMBER "A" | MEMBER "B" | SHOP CAMBER |
| UP TO 80'-6" | 6'-0" | 4'-0" | L 2½" x 2½" x ¼" | L 2½" x 2½" x ¼" | 2" |
| 81' TO 100'-6" | 6'-0" | 5'-0" | L 3" x 3" x ¼" | L 2½" x 2½" x ¼" | 2½" |
| 101' TO 130'-6" | 7'-0" | 6'-0" | L 3" x 3" x ¼" | L 3" x 3" x ¼" | 3½" |
| 131' TO 150'-6" | 8'-0" | 6'-0" | L 3½" x 3½" x 5/16" | L 3½" x 3½" x 5/16" | 4½" |
| 151' TO 160'-6" | 8'-0" | 7'-0" | L 3½" x 3½" x 5/16" | L 3½" x 3½" x 5/16" | 5½" |

NOTE: FOR SIZE OF CHORD MEMBERS SEE DATA SHEET.

GENERAL NOTES:

ALL STRUCTURAL STEEL AND COLUMN BASE PLATES ASTM A36, EXCEPT THAT CHORD ANGLES GREATER THAN ½" IN THICKNESS SHALL BE AASHTO M183 WITH SUPPLEMENTAL REQUIREMENTS: S5, CHARPY V-NOTCH IMPACT TEST FOR TEMPERATURE ZONE 2.

ALL ANCHOR BLOTS ASTM A370.

PROPOSED FIELD SPLICES SHALL BE SHOWN ON SHOP DRAWINGS FOR APPROVAL OF THE ENGINEER.

TRUSSES SHALL BE FABRICATED WITH A MINIMUM OF SPLICING IN TRUSS CHORDS. FIELD SPLICING WILL NOT BE PERMITTED WITHIN THE MIDDLE ONE-THIRD OF SPAN.

FOR ADDITIONAL INFORMATION SEE DATA SHEET.

ZINC CHROMATE PRIMER SHALL MEET THE REQUIREMENTS OF FEDERAL SPECIFICATIONS TT-P-645 OR TT-P-1757 AND SHALL BE ACCEPTED ON THE BASIS OF THE LABEL SHOWING CONFORMANCE OR A MANUFACTURER'S CERTIFICATION.

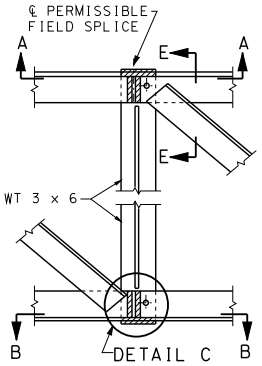


**SECTION THROUGH TRUSS LOCATING SPLICES**

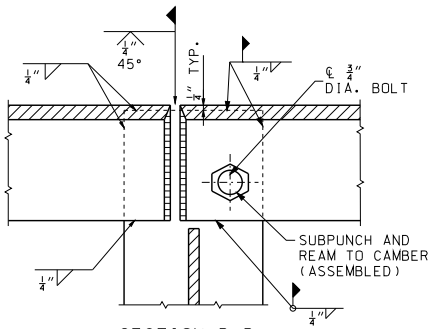


SECTION B-B

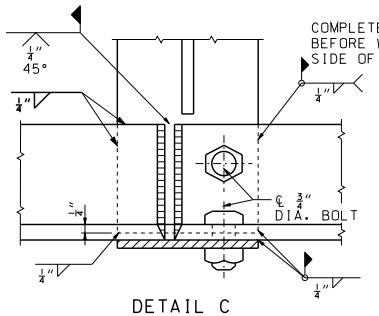


DETAIL C

**DETAIL OF FIELD SPLICES**
(IF ANY)

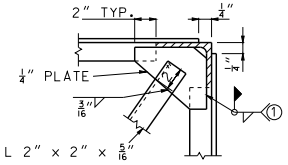


SECTION E-E
(FIELD SPLICE ONLY)

① SEE SHEET 2

MISSOURI HIGHWAYS AND TRANSPORTATION COMMISSION
105 WEST CAPITOL
JEFFERSON CITY, MO 65102
1-888-ASK-MODOT (1-888-275-6636)

STATE OF MISSOURI
KATHRYN PHILLIPS HARVEY
NUMBER PE-23751
PROFESSIONAL ENGINEER
THIS SHEET HAS BEEN SIGNED, SEALED AND DATED ELECTRONICALLY.

# OVERHEAD SIGN TRUSSES

STRUCTURAL STEEL

DATE EFFECTIVE: 10/01/2011
DATE PREPARED: 9/30/2011

903.60AA

SHEET NO. 1 OF 5

IF A SEAL IS PRESENT ON THIS SHEET IT HAS BEEN ELECTRONICALLY SEALED AND DATED.

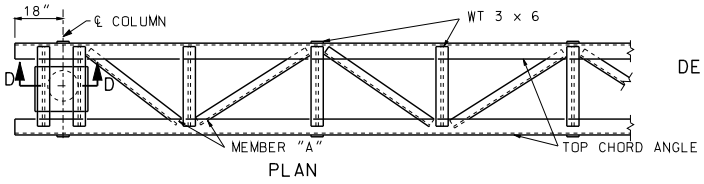


PLAN

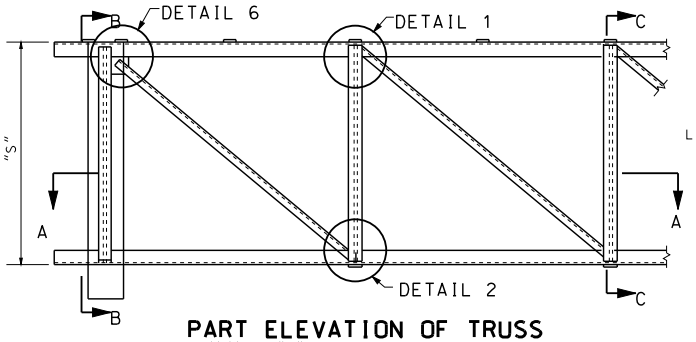


## PART ELEVATION OF TRUSS

NOTE: FOR SIZE OF MEMBER "A" SEE TABLE OF TRUSS VARIABLES, SHEET NO 1.

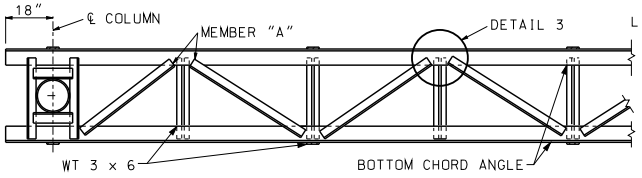


SECTION A-A

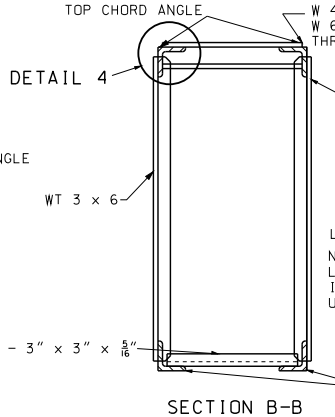


SECTION B-B

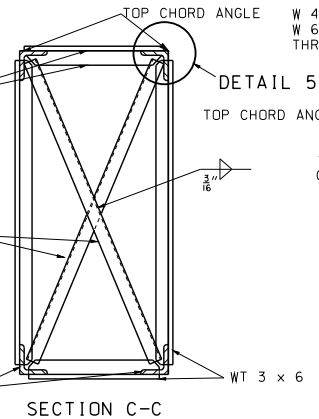


SECTION C-C

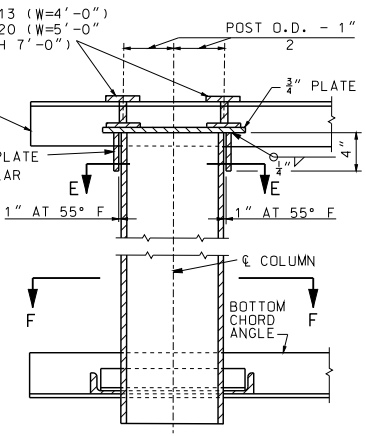


SECTION D-D

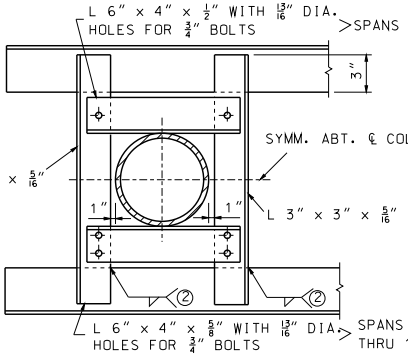


NOTE: BOLTS SHALL BE HIGH STRENGTH STEEL WITH HARDENED WASHERS UNDER HEAD AND NUT.

SECTION F-F

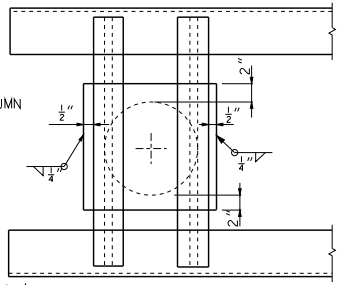


PLAN OF POST

NOTE: FILLET WELD 2 (SHOP OR FIELD) SHALL BE 3/16" WHEN "t" IS 1/2" OR LESS AND 1/4" WHEN "t" IS GREATER THAN 1/2".

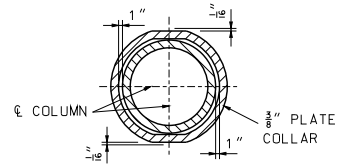


SECTION E-E

NOTE: DETAILS OF CANTILEVER END SECTION ARE SIMILAR TO THOSE SHOWN ON THIS SHEET.

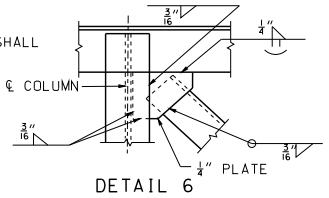


DETAIL 6

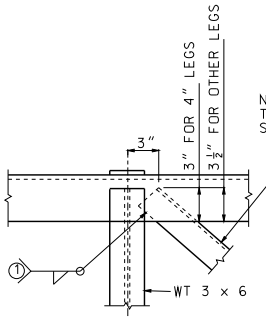


DETAIL 1

NOTE: FOR SIZE OF MEMBER "B" SEE TABLE OF TRUSS VARIABLES, SHEET NO. 1.

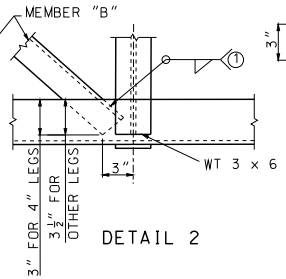


DETAIL 2

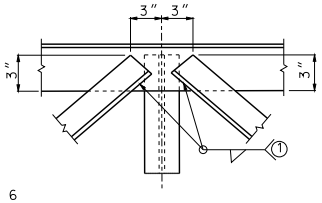


DETAIL 3

TYPICAL FOR ALL PANEL POINT FRAMING EXCEPT AT FIELD SPLICES, IF ANY, AND COLUMN SUPPORTS.

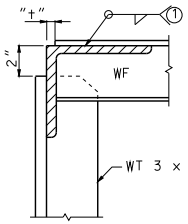


DETAIL 4

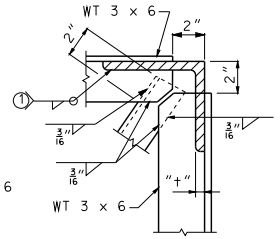


DETAIL 5

SLOT WEB OF STRUCTURAL TEE'S AND WIDE FLANGES TO RECEIVE LEG OF CHORD ANGLES (TYPICAL).

FILLET WELD 1 SHALL BE 5/16" WHEN "t" IS 1/2" OR LESS AND 1/4" WHEN "t" IS GREATER THAN 1/2".

IF DESIRED THE OUTSTANDING LEGS OF DIAGONAL ANGLES MAY BE CLIPPED AT 45° TO FACILITATE ASSEMBLY AND WELDING.


MISSOURI HIGHWAYS AND TRANSPORTATION COMMISSION
105 WEST CAPITOL
JEFFERSON CITY, MO 65102
1-888-ASK-MODOT (1-888-275-6636)


STATE OF MISSOURI
KATHRYN PHILLIPS HARVEY
NUMBER PE-23751
PROFESSIONAL ENGINEER
THIS SHEET HAS BEEN SIGNED, SEALED AND DATED ELECTRONICALLY.

# OVERHEAD SIGN TRUSSES

STRUCTURAL STEEL

DATE EFFECTIVE: 10/01/2011
DATE PREPARED: 9/30/2011

903.60AA

SHEET NO. 2 OF 5

IF A SEAL IS PRESENT ON THIS SHEET IT HAS BEEN ELECTRONICALLY SEALED AND DATED.

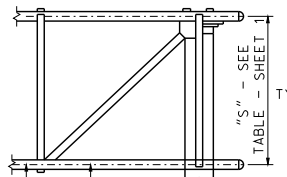


SECTION B-B

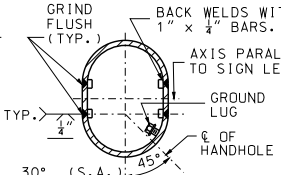


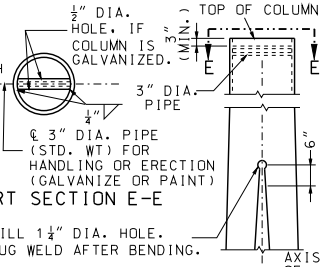


PART SECTION E-E

| POST TYPE | PIPE COLUMN | DIMENSION "E" | SPLIT | BASE PLATE SIZE* | ANCHOR BOLTS DIA. | PEDESTAL SIZE* a | PEDESTAL SIZE* b | FOOTING SIZE* | LONGITUDINAL FOOTING REINFORCEMENT TOP | LONGITUDINAL FOOTING REINFORCEMENT BOTTOM | CONCRETE C.Y. |
|---|---|---|---|---|---|---|---|---|---|---|---|
| I | 12" STD. AT 65.42 | 8½" | 6" | 2'-6"x 23"x 1½" | 6 AT 2¼" | 4'-0" | 2'-11" | 7'-0"x 14'-6" | 7-#5 BARS | 7-#6 BARS | 10.9 |
| II | 14" O.D. AT 72.09 | 8½" | 9½" | 3'-0"x 2'-0"x 1½" | 6 AT 2¼" | 4'-4" | 3'-0" | 8'-0"x 16'-0" | 8-#5 BARS | 9-#6 BARS | 13.2 |
| III | 16" O.D. AT 82.77 | 8¾" | 11½" | 3'-4"x 2'-2"x 1¾" | 6 AT 2¼" | 4'-8" | 3'-2" | 8'-6"x 17'-6" | 9-#5 BARS | 9-#7 BARS | 15.2 |
| IV | 18" O.D. AT 93.45 | 9½" | 12½" | 3'-7"x 2'-4"x 2" | 6 AT 2½" | 5'-1" | 3'-4" | 9'-6"x 19'-0" | 10-#5 BARS | 10-#8 BARS | 18.1 |
| V | 20" O.D. AT 104.13 | 9½" | 13" | 3'-10"x 2'-9"x 2" | 8 AT 2½" | 5'-4" | 3'-9" | 10'-0"x 20'-0" | 10-#5 BARS | 10-#8 BARS | 20.6 |
| VI | 24" O.D. AT 125.49 | 9½" | 10½" | 4'-0"x 3'-3"x 2" | 8 AT 2½" | 5'-6" | 4'-3" | 10'-6"x 21'-0" | 11-#5 BARS | 11-#8 BARS | 23.3 |
| VII | 24" O.D. AT 125.49 | 9½" | 13½" | 4'-3"x 3'-3"x 2" | 8 AT 2½" | 5'-9" | 4'-3" | 11'-0"x 22'-0" | 11-#5 BARS | 11-#9 BARS | 25.1 |

* BASE PLATES, PEDESTAL, AND FOOTINGS, LONGER SIDES SHALL BE NORMAL TO AXIS OF SIGN.

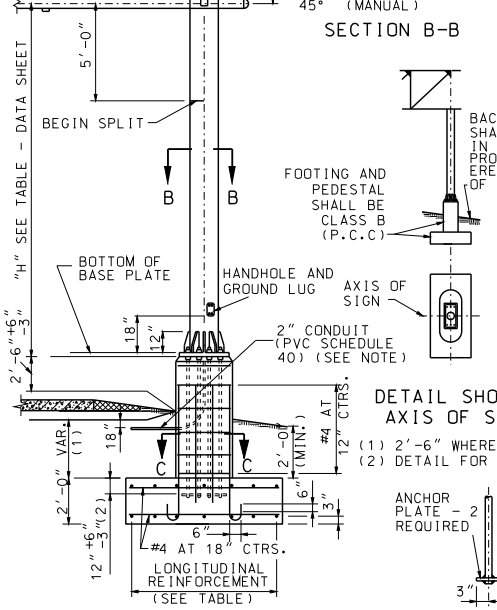


DETAIL SHOWING AXIS OF SIGN

(1) 2'-6" WHERE GROUND IS LEVEL
(2) DETAIL FOR 12" FIELD TOLERANCE.

NOTE: THE 2" CONDUIT IN THE CONCRETE PEDESTAL SHALL BE PVC SCHEDULE 40 AND SHALL BE PLACED WITH A MINUMUM RADIUS BEND OF 9½".

ELEVATION




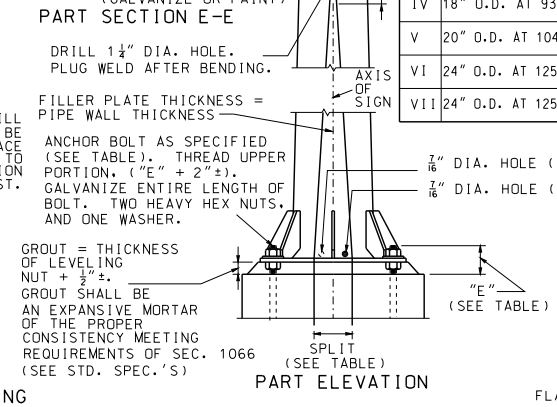


PART ELEVATION

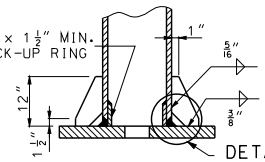


DETAIL X

PART SECTION A-A

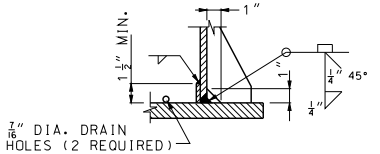


DETAIL X

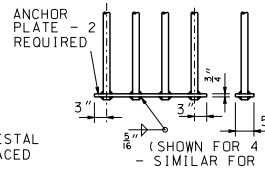


(SHOWN FOR 4 BOLTS - SIMILAR FOR 3 BOLTS)

ANCHORAGE DETAIL A

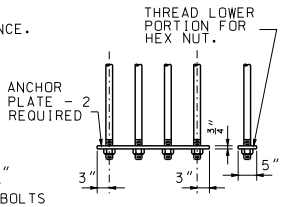


(SHOWN FOR 4 BOLTS - SIMILAR FOR 3 BOLTS)

ANCHORAGE DETAIL B (OPTIONAL)

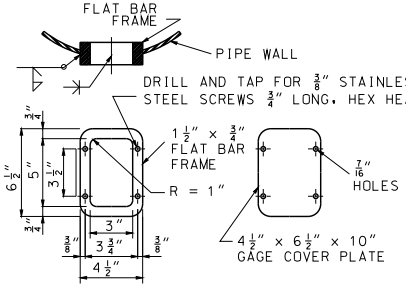


HANDHOLE AND COVER DETAILS

NOTE: HANDHOLE REQUIRED ONLY IN POWER COLUMN.

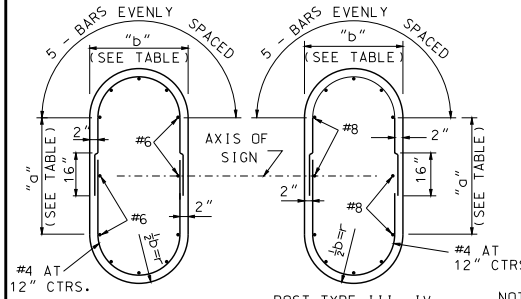


SECTION C-C
(TYPICAL SECTION SHOWING REINFORCING STEEL)

NOTE: FOR DETAILS OF ALTERNATE PEDESTAL, SEE SHEET NO. 4 OF 5.

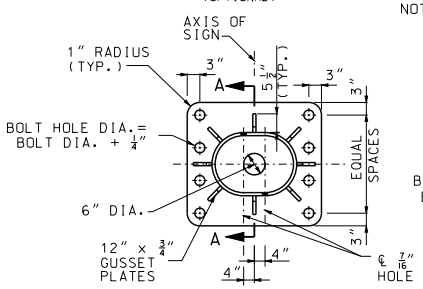


8 ANCHOR TYPE

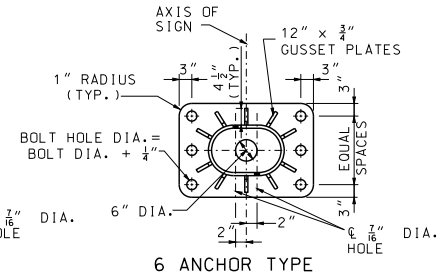


6 ANCHOR TYPE

TYPICAL BASE PLATES

GENERAL NOTES:
A TAPERED TUBE OF EQUIVALENT SIZE AND THICKNESS MAY BE SUBSTITUTED FOR PIPE POST.

ALL STEEL PIPE COLUMNS SHALL BE EITHER GRADE "B" SEAMLESS STEEEL PIPE OR GRADE "B" ELECTRIC RESISTANCE WELDED STEEL PIPE: A.S.T.M. SPECIFICATION A53. NO OBJECTIONABLE SEAMS WILL BE PERMITTED.

ALL STRUCTURES SHALL BE GROUNDED.

BURR THREADS ON ALL ANCHOR BOLTS.

A HORIZONTAL WELDED SPLICE MAY BE FABRICATED IN THE COLUMN BETWEEN THE TOP OF PIPE AND 4'- 0" BELOW THE BOTTOM CHORDS OF THE TRUSS WHEN DETAILED ON THE SHOP DRAWINGS AND APPROVED BY THE ENGINEER.

GROUND LUGS SHALL BE LOCATED INSIDE COLUMN NEAR HAND HOLE.

QUANTITIES FOR PEDESTAL, BASED ON NOMINAL HEIGHT OF 5'- 0".

QUANTITIES FOR FOOTING, BASED ON NOMINAL DEPTH OF 2'- 0".

QUANTITIES SHOWN ARE FOR ONE COLUMN ONLY.

IF A SEAL IS PRESENT ON THIS SHEET IT HAS BEEN ELECTRONICALLY SEALED AND DATED.

MISSOURI HIGHWAYS AND TRANSPORTATION COMMISSION
105 WEST CAPITOL
JEFFERSON CITY, MO 65102
1-888-ASK-MODOT (1-888-275-6636)

STATE OF MISSOURI KATHRYN PHILLIPS HARVEY NUMBER PE-23751 PROFESSIONAL ENGINEER
THIS SHEET HAS BEEN SIGNED, SEALED AND DATED ELECTRONICALLY.

# OVERHEAD SIGN TRUSSES

STRUCTURAL STEEL

DATE EFFECTIVE: 10/01/2011
DATE PREPARED: 9/30/2011

903.60AA

SHEET NO. 3 OF 5

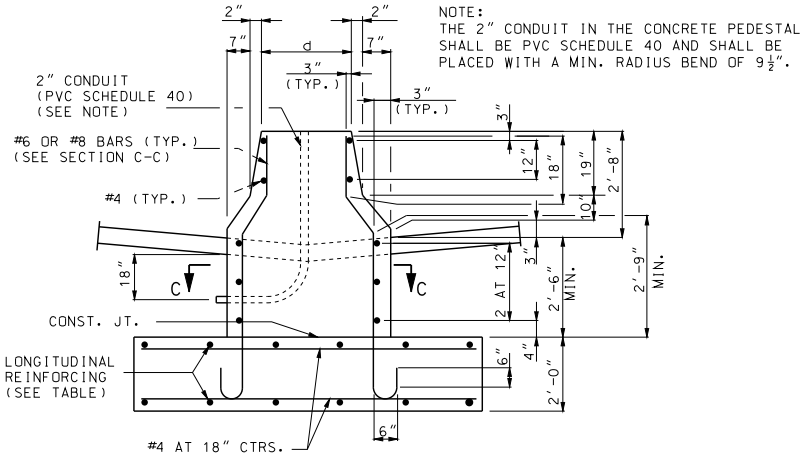


PART ELEVATION
(TYPE A CONCRETE TRAFFIC BARRIER)

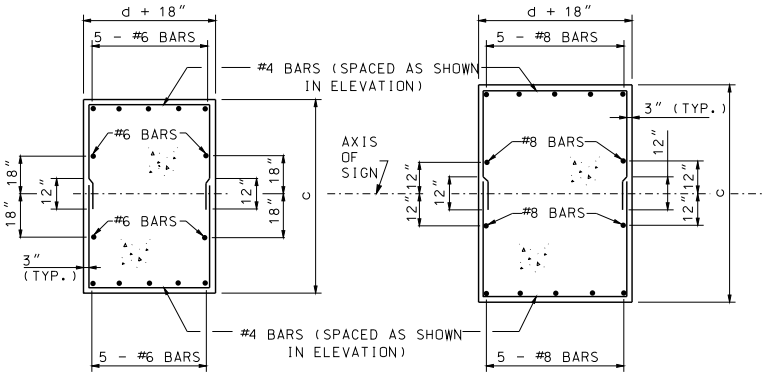


POST TYPE I AND II

POST TYPEIII, IV, V, VI, AND VII

SECTION C-C
TYPICAL SECTION SHOWING
REINFORCING STEEL

NOTE:
THE 2" CONDUIT IN THE CONCRETE PEDESTAL SHALL BE PVC SCHEDULE 40 AND SHALL BE PLACED WITH A MIN. RADIUS BEND OF 9½".

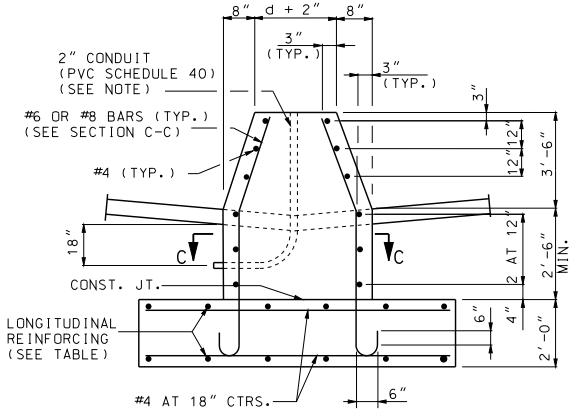


PART ELEVATION
(TYPE C CONCRETE TRAFFIC BARRIER)

| POST TYPE | PIPE COLUMN | PEDESTAL SIZE* | | FOOTING SIZE* | LONGITUDINAL FOOTING REINFORCEMENT | | CONCRETE C.Y. | |
|---|---|---|---|---|---|---|---|---|
| | | c | d | | TOP | BOTTOM | TYPE A MEDIAN BARRIER | TYPE C MEDIAN BARRIER |
| I | 12" STD. AT 65.42 | 5'-9" | 2'-1" | 7'-0"x 14'-6" | 7-#5 BARS | 7-#6 BARS | 10.9 | 11.6 |
| II | 14" O.D. AT 72.09 | 6'-2" | 2'-2" | 8'-0"x 16'-0" | 8-#5 BARS | 9-#6 BARS | 13.2 | 14.0 |
| III | 16" O.D. AT 82.77 | 6'-7" | 2'-4" | 8'-6"x 17'-6" | 9-#5 BARS | 9-#7 BARS | 15.2 | 16.1 |
| IV | 18" O.D. AT 93.45 | 7'-1" | 2'-6" | 9'-6"x 19'-0" | 10-#5 BARS | 10-#8 BARS | 18.1 | 19.1 |
| V | 20" O.D. AT 104.13 | 7'-8" | 2'-11" | 10'-0"x 20'-0" | 10-#5 BARS | 10-#8 BARS | 20.6 | 21.7 |
| VI | 24" O.D. AT 125.49 | 8'-3" | 3'-5" | 10'-6"x 21'-0" | 11-#5 BARS | 11-#8 BARS | 23.3 | 24.6 |
| VII | 24" O.D. AT 125.49 | 8'-6" | 3'-5" | 11'-0"x 22'-0" | 11-#5 BARS | 11-#9 BARS | 25.1 | 26.5 |

* BASE PLATES, PEDESTAL, AND FOOTINGS LONGER SIDES SHALL BE NORMAL TO AXIS OF SIGN.

GENERAL NOTES:

A TAPERED TUBE OF EQUILVALENT SIZE AND THICKNESS MAY BE SUBSTITUTED FOR PIPE POST.

ALL STEEL PIPE COLUMNS SHALL BE EITHER GRADE "B" SEAMLESS STEEL PIPE OR GRADE "B" ELECTRIC RESISTANCE WELDED STEEL PIPE; A.S.T.M. SPECIFICATION A53.

NO OBJECTIONABLE SEAMS WILL BE PERMITTED.

ALL STRUCTURES SHALL BE GROUNDED.

BURR THREADS ON ALL ANCHOR BOLTS.

PIPE COLUMN, BASE PLATE, ANCHOR BOLTS AND NOTES PERTAINING TO THESE ITEMS HAVE BEEN OMITTED FOR CLARITY. REFER TO SHEET 3 OF 5 FOR DETAILS OF THESE ITEMS.

GROUND LUGS SHALL BE LOCATED INSIDE COLUMN NEAR HAND HOLE.

QUANTITIES FOR PEDESTAL ARE BASED ON NOMINAL HEIGHT OF 5'-2" (TYPE A MEDIAN BARRIER) OR 6'-0" (TYPE C MEDIAN BARRIER).

QUANTITIES FOR FOOTING ARE BASED ON NOMINAL DEPTH OF 2'-0".

QUANTITIES SHOWN ARE FOR ONE COLUMN ONLY.

# DETAILS OF ALTERNATE PEDESTAL

(TO BE USED ADJACENT TO TYPE "A" OR "C" MEDIAN BARRIER)

IF A SEAL IS PRESENT ON THIS SHEET IT HAS BEEN ELECTRONICALLY SEALED AND DATED.

MISSOURI HIGHWAYS AND TRANSPORTATION COMMISSION
105 WEST CAPITOL
JEFFERSON CITY, MO 65102
1-888-ASK-MODOT (1-888-275-6636)

STATE OF MISSOURI
KATHRYN PHILLIPS HARVEY
NUMBER PE-23751
PROFESSIONAL ENGINEER
THIS SHEET HAS BEEN SIGNED, SEALED AND DATED ELECTRONICALLY.

# OVERHEAD SIGN TRUSSES

STRUCTURAL STEEL

DATE EFFECTIVE: 10/01/2011
DATE PREPARED: 9/30/2011

903.60AA

## TYPICAL HALF PLAN OF SIGN COMPONENTS

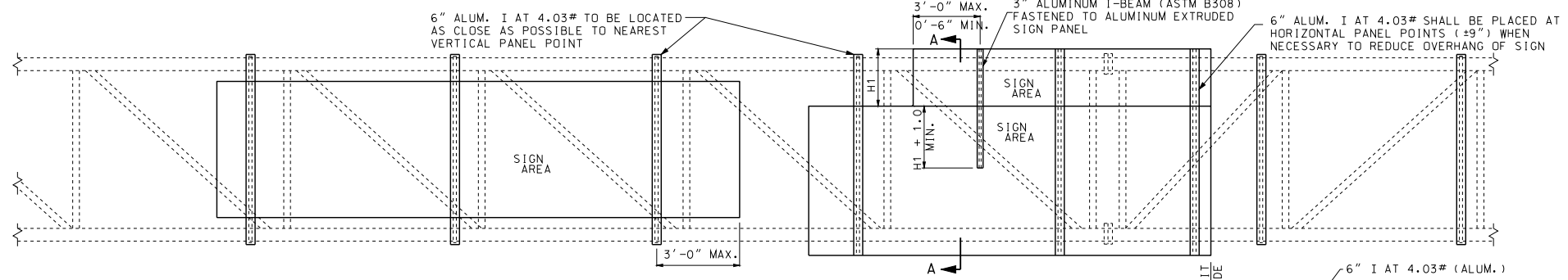


## TYPICAL ELEVATION OF SIGN COMPONENTS

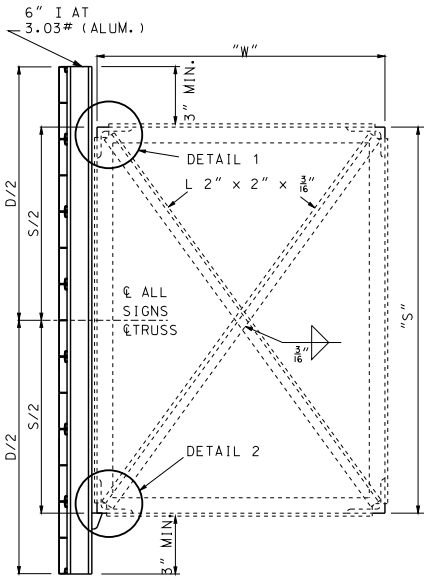


SECTION A-A

## TYPICAL SECTION OF SIGN SUPPORT

NOTE: "D" = GREATEST OVERALL DEPTH OF ANY SIGN OR SIGNS ON TRUSSES AND "S"= TRUSS DEPTH. SEE SHEET NO. 5 OF 7 FOR LOCATION OF SECTION A-A.

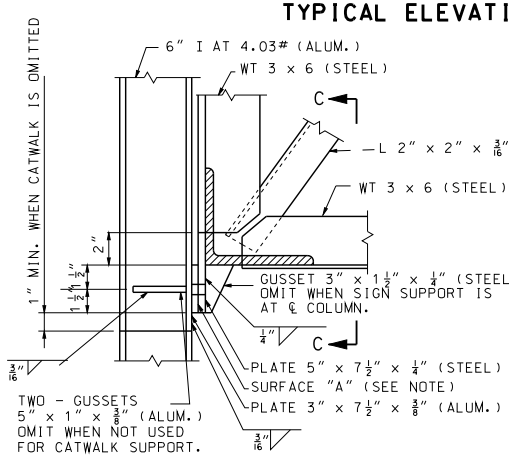


DETAIL 2

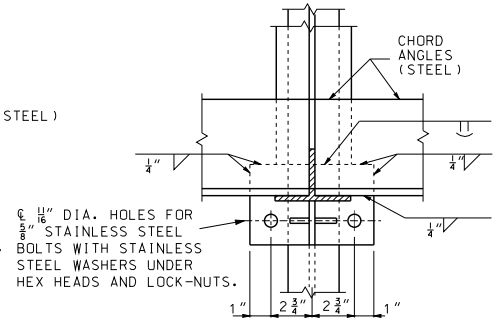


SECTION C-C

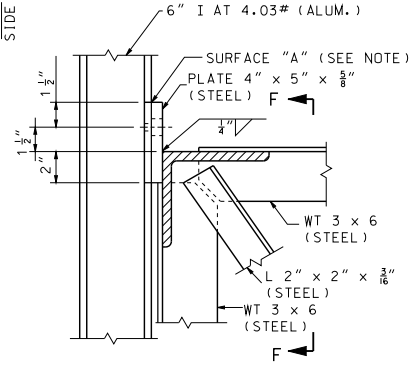


DETAIL 1

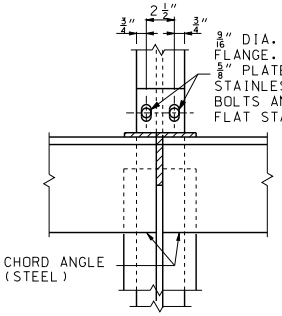


SECTION F-F

NOTE:
SURFACE "A", ZINC CHROMATE ON ALUMINUM SURFACES. NORMAL CLEANING AND PAINTING ON STEEL SURFACES. ZINC CHROMATE IS NOT REQUIRED WHEN STEEL IS GALVANIZED.

GENERAL NOTES:

EXIT NO. PANELS SHALL BE MOUNTED FLUSH WITH THE EXIT SIDE OF THE GUIDE SIGN.

ALL SIGNS SHALL BE CENTEREDVERTICALLY ABOUT THE HORIZONTAL ℄ OF THE TRUSS.

MISSOURI HIGHWAYS AND TRANSPORTATION COMMISSION
105 WEST CAPITOL
JEFFERSON CITY, MO 65102
1-888-ASK-MODOT (1-888-275-6636)

STATE OF MISSOURI
KATHRYN PHILLIPS HARVEY
NUMBER PE-23751
PROFESSIONAL ENGINEER
THIS SHEET HAS BEEN SIGNED, SEALED AND DATED ELECTRONICALLY.

# OVERHEAD SIGN TRUSSES

STRUCTURAL STEEL

| DATE EFFECTIVE: | 10/01/2011 | 903.60AA | SHEET NO. 5 OF 5 |
|---|---|---|---|
| DATE PREPARED: | 9/30/2011 | | |

IF A SEAL IS PRESENT ON THIS SHEET IT HAS BEEN ELECTRONICALLY SEALED AND DATED.