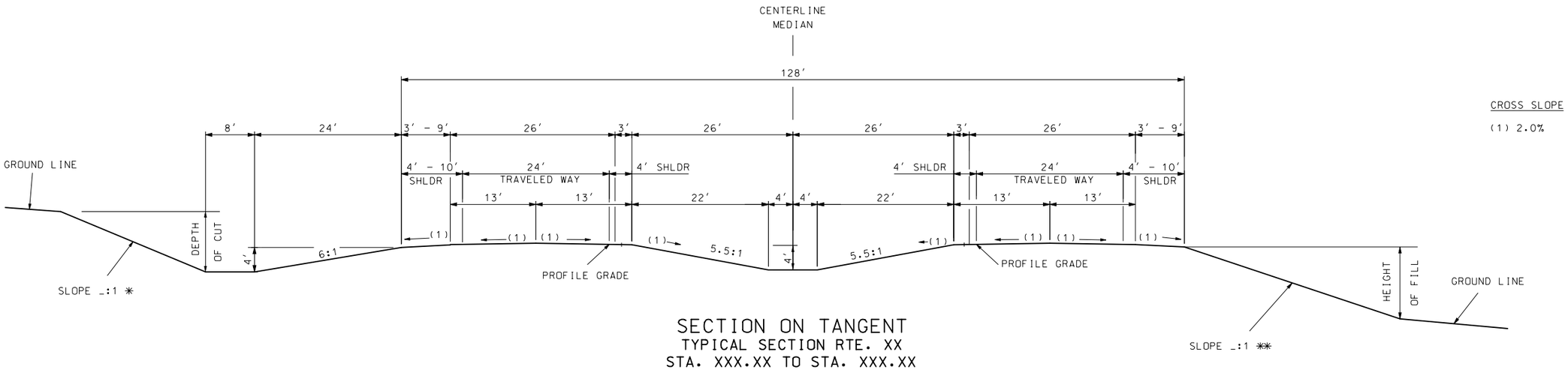

CROSS SLOPE

(1) 2.0%

SECTION ON TANGENT
TYPICAL SECTION RTE. XX
STA. XXX.XX TO STA. XXX.XX

SEE STANDARDS 203.21, 606.00 AND 609.40 FOR SHOULDER WIDENING.

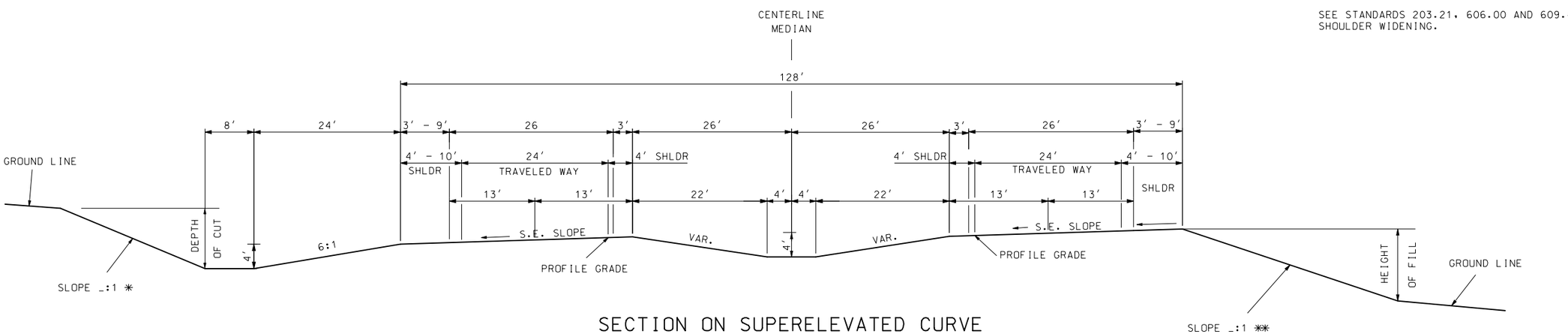

SECTION ON SUPERELEVATED CURVE
TYPICAL SECTION RTE. XX
STA. XXX.XX TO STA. XXX.XX

✳ BACKSLOPE DETERMINED BY SOIL SURVEY.

✳✳ THE FILL SLOPE SHALL BE 6:1 OR FLATTER WHEN THE FILL HEIGHT IS EQUAL TO OR LESS THAN 4 FEET (I.E., THE OFFSET FROM THE TOE OF FILL TO THE SHOULDER POINT IS A MINIMUM OF 24 FEET). THE SLOPE MAY VARY TO MEET THIS REQUIREMENT. FOR FILL HEIGHTS GREATER THAN 4 FEET, THE SLOPE SHALL NOT EXCEED THE MAXIMUM SLOPE DETERMINED BY THE SOIL SURVEY.

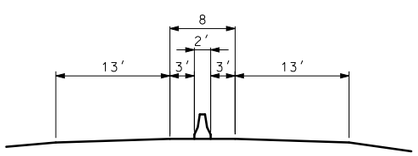

ALTERNATE MEDIAN

D-61F	
FUNCTION	NON-INTERSTATE RURAL MAJOR ROUTE 4-LANE
ADT	> 1700
TRAVELED WAY WIDTH	24′
ROADBED WIDTH	68′ - 128′
FORESLOPE	6:1
DITCH	4′

"THIS MEDIA SHOULD NOT BE CONSIDERED A CERTIFIED DOCUMENT."

DATE PREPARED	
5/27/2010	
ROUTE	STATE MO
DISTRICT	SHEET NO.
COUNTY	
JOB NO.	
CONTRACT ID.	
PROJECT NO.	
BRIDGE NO.	

DATE	DESCRIPTION

MISSOURI HIGHWAYS AND TRANSPORTATION COMMISSION
105 WEST CAPITOL
JEFFERSON CITY, MO 65102
1-888-ASK-MODOT (1-888-275-6636)

IF A SEAL IS PRESENT ON THIS SHEET IT HAS BEEN ELECTRONICALLY SEALED AND DATED.