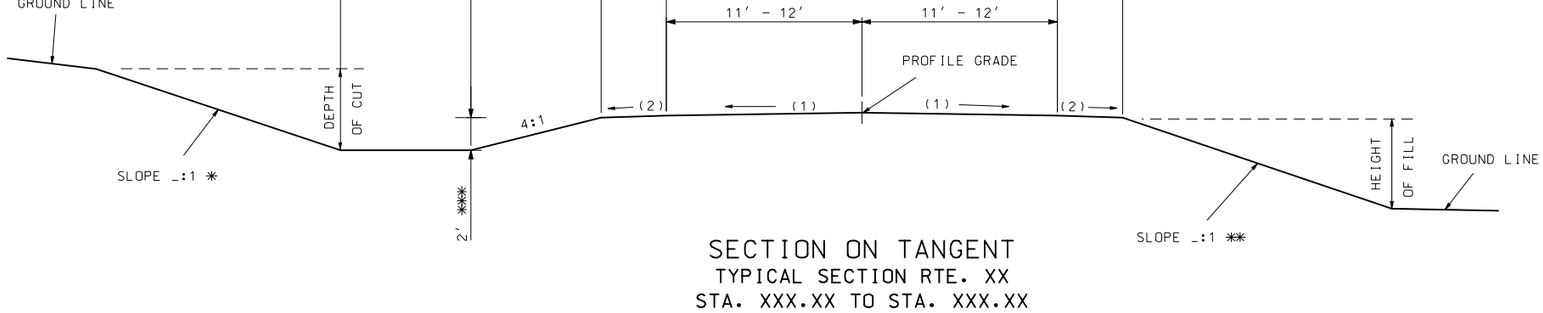

SECTION ON TANGENT
TYPICAL SECTION RTE. XX
STA. XXX.XX TO STA. XXX.XX

CROSS SLOPE

(1) 2.0%
(2) 4.0%
(3) S.E. SLOPE IF GREATER THAN 4.0%

SEE STANDARDS 203.20, 606.00 AND 609.40 FOR SHOULDER WIDENING.

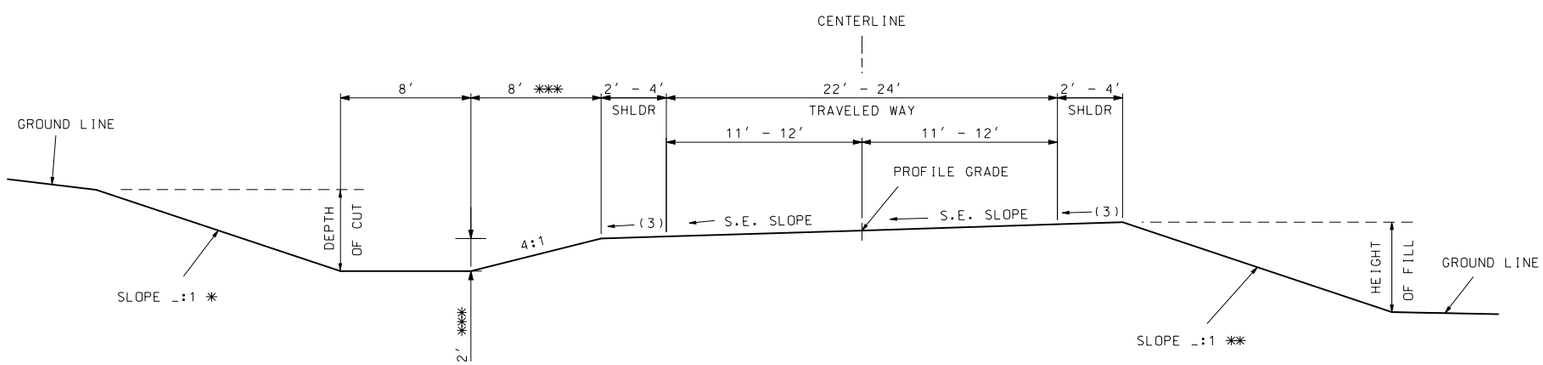

SECTION ON SUPERELEVATED CURVE
TYPICAL SECTION RTE. XX
STA. XXX.XX TO STA. XXX.XX

* BACKSLOPE DETERMINED BY SOIL SURVEY.

** THE FILL SLOPE SHALL BE 4:1 OR FLATTER WHEN THE FILL HEIGHT IS EQUAL TO OR LESS THAN 2 FEET (I.E., THE OFFSET FROM THE TOE OF FILL TO THE SHOULDER POINT IS A MINIMUM OF 8 FEET). THE SLOPE MAY VARY TO MEET THIS REQUIREMENT. FOR FILL HEIGHTS GREATER THAN 2 FEET, THE SLOPE SHALL NOT EXCEED THE MAXIMUM SLOPE DETERMINED BY THE SOIL SURVEY.

*** 4′ DITCH DEPTH PREFERRED IF ALTERNATE 18″ ROCK BASE IS USED. SIDESLOPE WIDTH SHALL BE 16′ FOR 4′ DITCH DEPTH.

D-67G	
FUNCTION	LOCAL ROADWAY
ADT	>400
TRAVELED WAY WIDTH	22′ - 24′
ROADBED WIDTH	26′ - 32′
FORESLOPE	4:1
DITCH	2′

"THIS MEDIA SHOULD NOT BE CONSIDERED A CERTIFIED DOCUMENT."

DATE PREPARED	
5/27/2010	
ROUTE	STATE MO
DISTRICT	SHEET NO.
COUNTY	
JOB NO.	
CONTRACT ID.	
PROJECT NO.	
BRIDGE NO.	

DESCRIPTION	DATE

MISSOURI HIGHWAYS AND TRANSPORTATION COMMISSION
105 WEST CAPITOL
JEFFERSON CITY, MO 65102
1-888-ASK-MODOT (1-888-275-6636)

IF A SEAL IS PRESENT ON THIS SHEET IT HAS BEEN ELECTRONICALLY SEALED AND DATED.