EFFECTIVE 04-01-2005

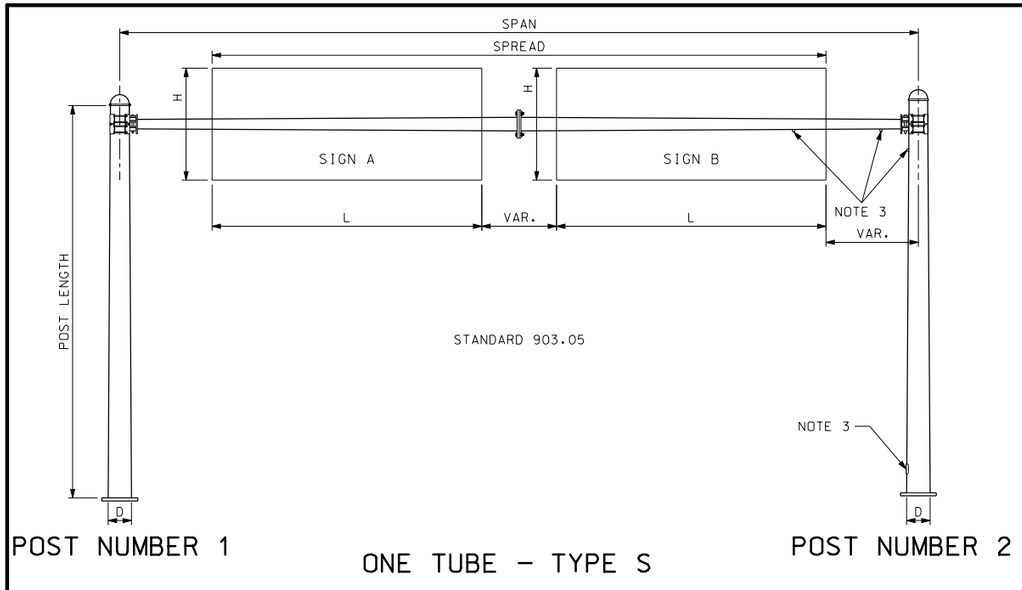

STANDARD 903.05

ONE TUBE – TYPE S

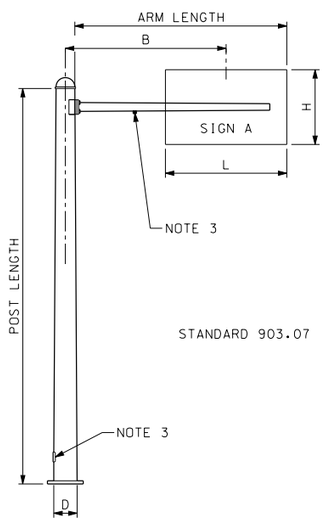

STANDARD 903.07

ONE TUBE – TYPE C

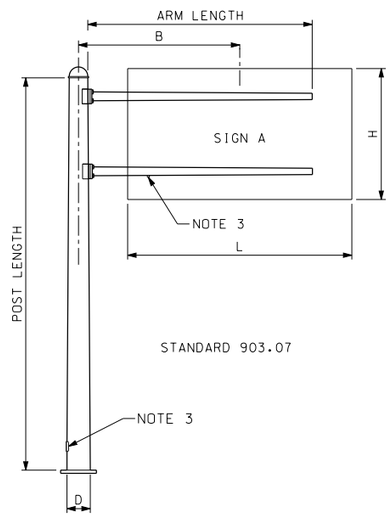

STANDARD 903.07

TWO TUBE – TYPE C

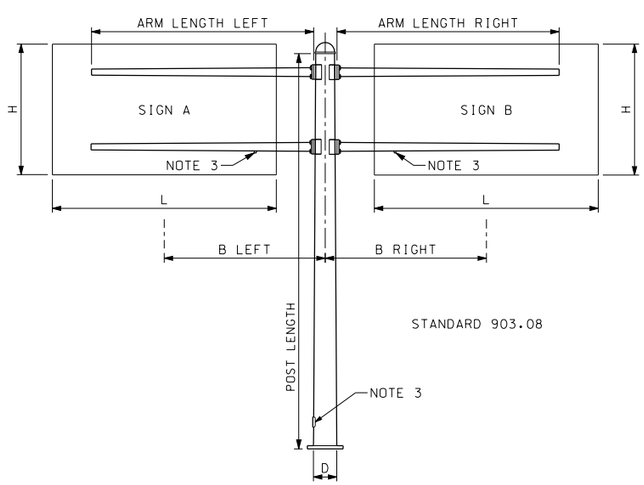

STANDARD 903.08

TWO TUBE – TYPE B

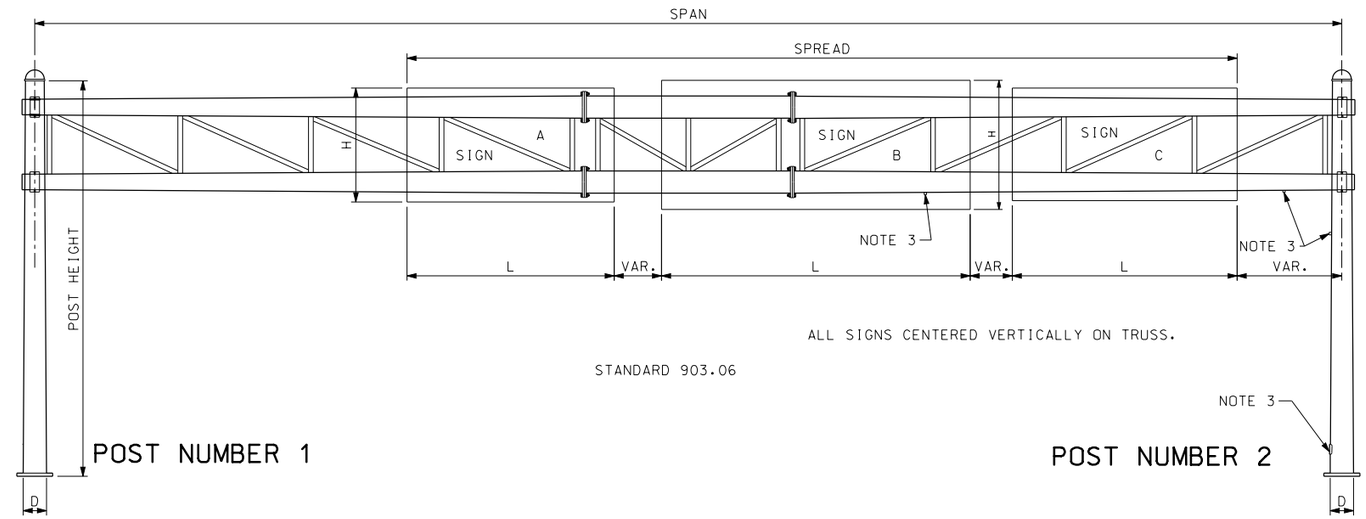

ALL SIGNS CENTERED VERTICALLY ON TRUSS.

STANDARD 903.06

TWO TUBE – TYPE S

TUBULAR STEEL SUPPORT NUMBERING SYSTEM

THE FIRST SYMBOL (LETTER) INDICATES TYPE AS, C FOR CANTILEVER, B FOR BUTTERFLY, S FOR SPAN TYPE.

THE SECOND SYMBOL (NUMBER) INDICATES SINGLE (1) OR DOUBLE (2) MAST ARMS OR TRUSS.

THE THIRD SYMBOL (NUMBER) INDICATES GAGE – POST
7 = 7 GAUGE (.1793") 77 = 7 + 7 GAUGE (.3586")
3 = 3 GAUGE (.2500") 33 = 3 + 3 GAUGE (.5000")
0 = 0 GAUGE (.3125") 00 = 0 + 0 GAUGE (.6250")

THE FOURTH SYMBOL (NUMBER) INDICATES DIAMETER IN INCHES OF THE POST BASE.

THE FIFTH SYMBOL (NUMBER) INDICATES LENGTH IN FEET OF ARM OR SPAN.

EXAMPLE: DESIGN NUMBER B-20018-24 INDICATES BUTTERFLY TYPE, TWO ARMS, 2-PLY, 0-GAUGE, 18" DIAMETER AT BASE OF POST & 24' MAST ARMS.

NOTES

1. ALL POSTS, BEAMS, MAST ARMS, ANGLES, BRACKETS & ETC. SHALL BE HOT DIP GALVANIZED AFTER FABRICATION.
2. SHOP DRAWINGS ARE NOT REQUIRED.
3. HANDHOLES AND 1¼" BLIND HALF COUPLINGS REQUIRED ON DESIGNATED POSTS. HANDHOLES SHALL BE PLACED ON RIGHT HAND SHOULDER SIDE OF TRUSSES.
4. STRUCTURES DESIGNED FOR TOTAL SIGN AREA COMMENSURATE WITH HEIGHT OF SIGN AND REQUIRED VERTICAL CEARANCE.
5. DESIGN SPECIFICATIONS: AASHTO STANDARD SPECIFICATIONS FOR STRUCTURAL SUPPORTS FOR HIGHWAY SIGNS, LUMINAIRES, AND TRAFFIC SIGNALS – 1985.

TUBULAR STEEL SUPPORT DESIGN DATA STANDARDS 903.05 THRU 903.08

SIGN NUMBER	STATION	LOCATION	STANDARD NUMBER	TYPE	SPAN OR ARM FT-IN.	B LENGTH FT-IN.	POST LENGTH NO. 1 FT	POST LENGTH NO. 2 FT	CONCRETE FOOTINGS CU YDS	SIGN DATA SPREAD FT-IN.	SIGN A L FT-IN.	SIGN A H FT-IN.	SPACE FT-IN.	SIGN B L FT-IN.	SIGN B H FT-IN.	SPACE FT-IN.	SIGN C L FT-IN.	SIGN C H FT-IN.	SPACE FT-IN.	SIGN D L FT-IN.	SIGN D H FT-IN.	SPACE FT-IN.	SIGN E L FT-IN.	SIGN E H FT-IN.	SPACE FT-IN.	TOTAL SQ FT

"THIS MEDIA SHOULD NOT BE CONSIDERED A CERTIFIED DOCUMENT."

DATE PREPARED	5/27/2010
ROUTE	STATE MO
DISTRICT	SHEET NO.
COUNTY	
JOB NO.	
CONTRACT ID.	
PROJECT NO.	
BRIDGE NO.	

DESCRIPTION	DATE

MISSOURI HIGHWAYS AND TRANSPORTATION COMMISSION
105 WEST CAPITOL
JEFFERSON CITY, MO 65102
1-888-ASK-MODOT (1-888-275-6636)

IF A SEAL IS PRESENT ON THIS SHEET IT HAS BEEN ELECTRONICALLY SEALED AND DATED.