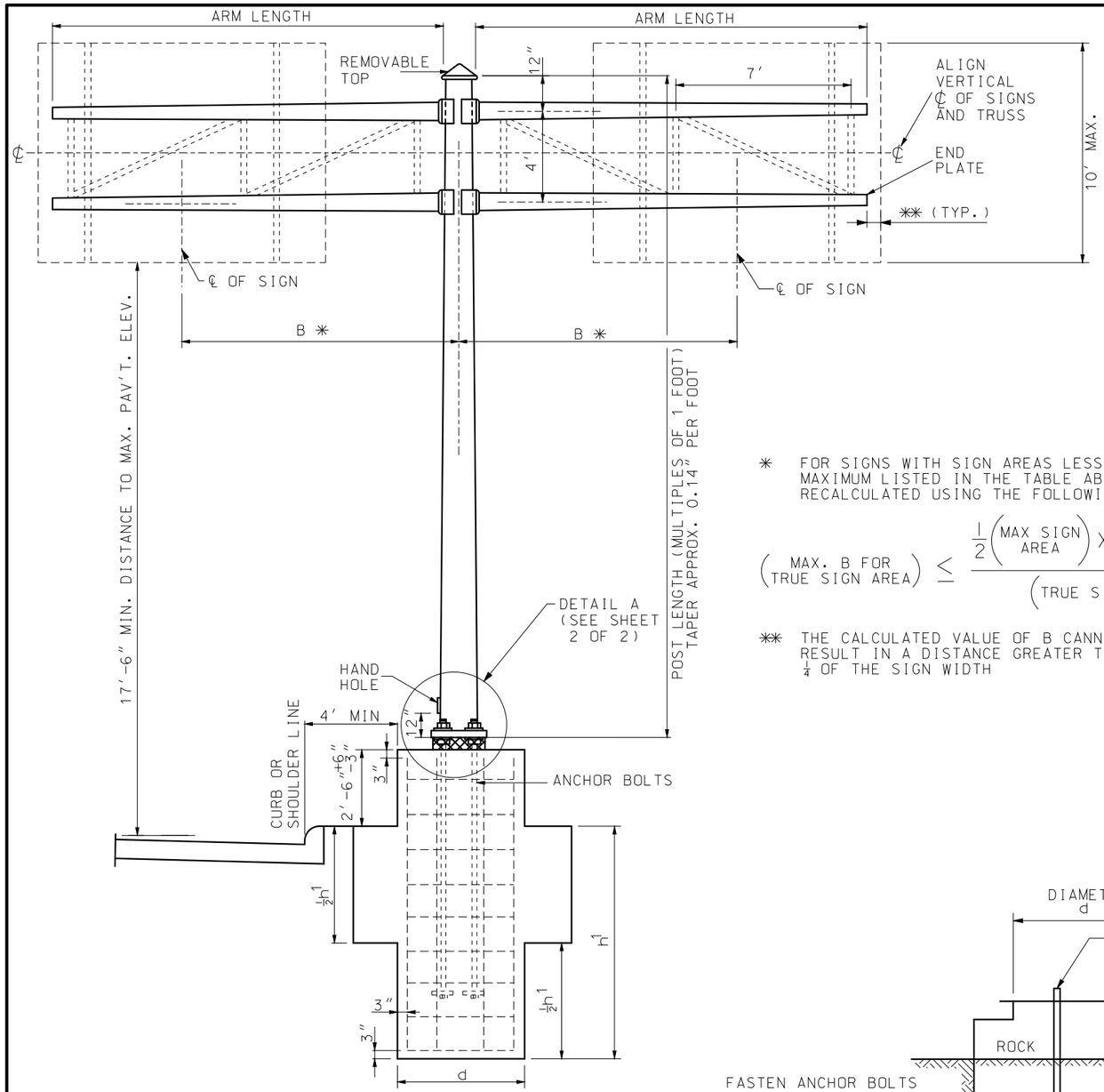

TYPE NUMBER	POST			ARM		MAX. AREA (2) SQ. FT.
	GA.	"B"*	DIA.	GA.	DIMENSIONS	
B-2018	0	8'	18"	7	7.5" x 5.82" x 12'	260
	0	12'	18"	7	9.0" x 6.76" x 16'	240
	0	16'	18"	3	10.0" x 7.2" x 20'	230
	0	20'	18"	3	11.0" x 7.64" x 24' (1)	200
B-23318	3+3	10'	18"	7	9" x 6.48" x 18'	290
	3+3	14'	18"	7	11" x 7.92" x 22' (1)	300
	3+3	18'	18"	7	12.5" x 8.86" x 26' (1)	300
B-20018	0+0	14'	18"	7	12.5" x 9.14" x 24' (1)	410
	0+0	18'	18"	3	12.5" x 8.58" x 28' (1)	430
	0+0	24'	18"	0	13" x 24" x 34' (1)	430

NOTES:
(1) ARMS OVER 20' TO BE TRUSS TYPE WITH ∠ 3" x 3" x ⅜" ANGLES.

(2) MAX SIGN AREA ON EACH SIDE EQUALS HALF THE TOTAL IN CHART.

W = 40# PER SQUARE FOOT

* FOR SIGNS WITH SIGN AREAS LESS THAN THE MAXIMUM LISTED IN THE TABLE ABOVE, B CAN BE RECALCULATED USING THE FOLLOWING EQUATION:

$$\left(\text{MAX. B FOR TRUE SIGN AREA}\right) \leq \frac{\frac{1}{2}\left(\text{MAX SIGN AREA}\right) \times \left(\text{MAX. B WITH MAX. SIGN AREA}\right)}{\left(\text{TRUE SIGN AREA}\right)}$$

** THE CALCULATED VALUE OF B CANNOT RESULT IN A DISTANCE GREATER THAN ¼ OF THE SIGN WIDTH

ESTIMATED QUANTITIES											
TYPE NUMBER	DIA. "d"	DIA. "b"	CLASS B CONCRETE FOOTING (C.Y.)				REINFORCING STEEL				
			"d" SECTION		"b" SECTION		#5		#4 (3)		TOTAL LBS.
			1' DEPTH	1" DEPTH	1' DEPTH	1" DEPTH	NO.	FT.-IN.	NO.	FT.-IN.	
B-2018	3'-6"	6'-0"	0.3563	0.0297	0.6800	0.0567	6	10'-0"	11	10'-4"	139
B-23318	3'-6"	7'-0"	0.3563	0.0297	0.8100	0.0675	6	10'-6"	12	10'-4"	149
B-20018	3'-6"	7'-0"	0.3563	0.0297	0.8100	0.0675	6	12'-0"	13	10'-4"	165

(3) ESTIMATED QUANTITY FOR REINFORCING STEEL IS BASED ON A 2:1 (H:V) SLOPE.

MODIFIED FOOTING IN SOLID ROCK						CLASS B CONCRETE FOOTING CU. YD.	
TYPE NUMBER	ANCHOR BOLT (4) (DIA.)	ANCHOR BOLT PLATE	FOOTING			"b" SECTION	
			"h2"	"d"	"b"	1' DEPTH	1" DEPTH
B-2018	2¼"	4½" x 4½" x ¾"	3'-6"	3'-6"	3'-6"	0.3563	0.0297
B-23318	3"	5½" x 5½" x 1"	4'-0"	3'-6"	4'-6"	0.4860	0.0405
B-20018	3"	5½" x 5½" x 1"	5'-0"	3'-6"	4'-6"	0.4860	0.0405

(4) ANCHOR BOLT LENGTH AS REQUIRED

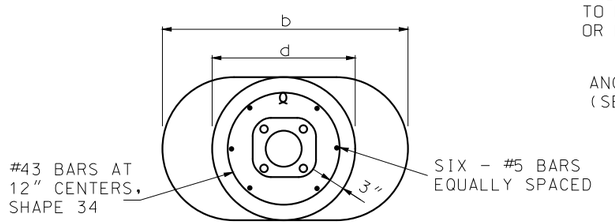

PLAN FOOTING

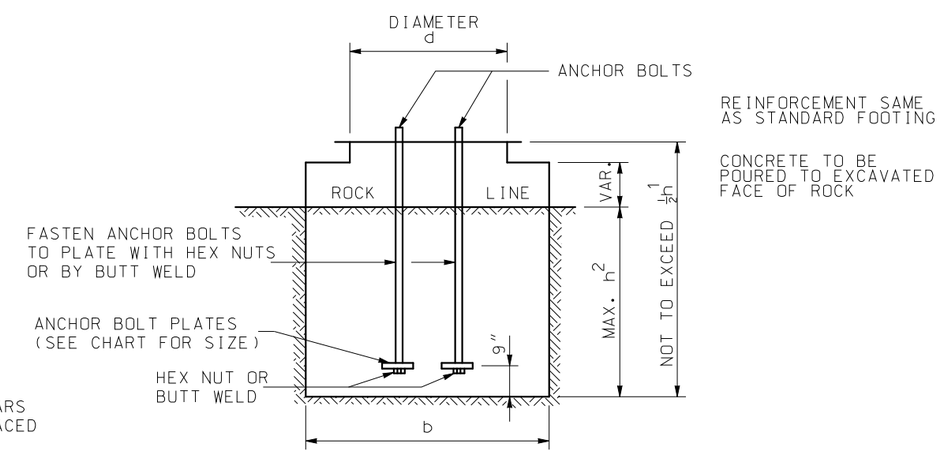

REINFORCEMENT SAME AS STANDARD FOOTING

CONCRETE TO BE POURED TO EXCAVATED FACE OF ROCK

MODIFIED FOOTINGS IN SOLID ROCK

GENERAL NOTE:

ALL SIGNS SHALL BE CENTERED VERTICALLY ABOUT THE HORIZONTAL ℄ OF THE TRUSS.

MISSOURI HIGHWAYS AND TRANSPORTATION COMMISSION
105 WEST CAPITOL
JEFFERSON CITY, MO 65102
1-888-ASK-MODOT (1-888-275-6636)

STATE OF MISSOURI
EILEEN H. RACKERS
NUMBER PE-28336
PROFESSIONAL ENGINEER
THIS SHEET HAS BEEN SIGNED, SEALED AND DATED ELECTRONICALLY.

HIGHWAY SIGNING
TUBULAR SUPPORT STEEL
TYPE B

DATE EFFECTIVE: 10/01/2016
DATE PREPARED: 8/11/2016

903.08H

SHEET NO. 1 OF 2

IF A SEAL IS PRESENT ON THIS SHEET IT HAS BEEN ELECTRONICALLY SEALED AND DATED.

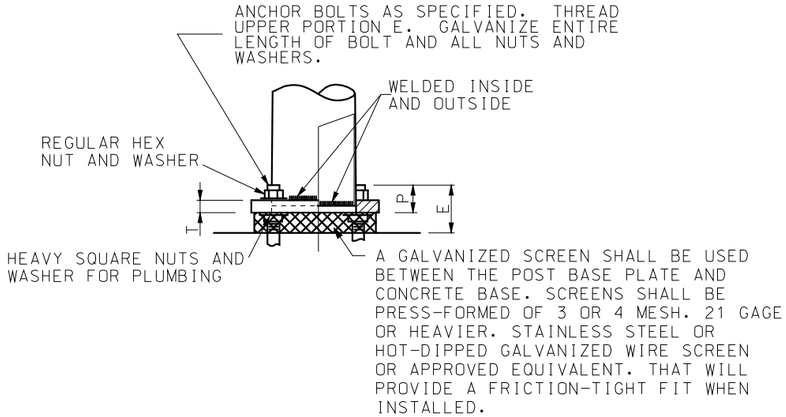

DETAIL A

ELEVATION BASE DETAIL

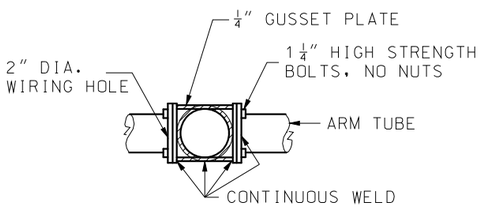

ARM ATTACHMENT DETAIL

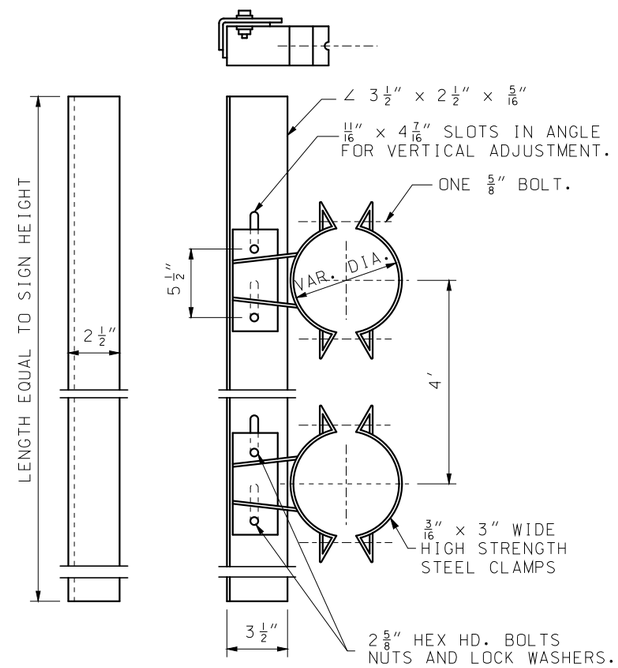

GALVANIZED SIGN BRACKET ASSEMBLY ✳

SIGN HEIGHT INCHES	MAX. LIN. FT. OF SIGN WIDTH PER BRACKET
48 & UNDER	16
60	16
72	15
84	11
96	6
108	4
120	3

✳ MINIMUM OF TWO BRACKETS REQUIRED ON SIGNS OVER 42" IN LENGTH

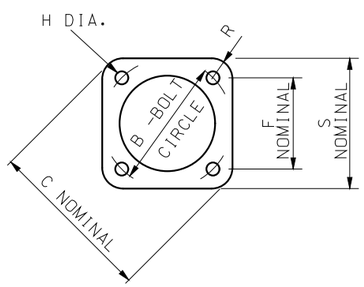

PLAN POST BASE DETAIL

POST BASE DIMENSIONS													
TYPE NUMBER	B	C	F	H	S	R	P	T	E	ANCHOR BOLTS	FOOTING "h1"	FOOTING "d"	FOOTING "b"
B-2018	$25\frac{1}{2}$"	33"	18"	$2\frac{5}{8}$"	$26\frac{1}{2}$"	$5\frac{1}{2}$"	$5\frac{1}{2}$"	$2\frac{1}{2}$"	$9\frac{1}{2}$"	$2\frac{1}{4}" \times 96"$	7'-6"	3'-6"	6'-0"
B-23318	$25\frac{1}{2}$"	33"	18"	$3\frac{3}{8}$"	$26\frac{1}{2}$"	$5\frac{1}{2}$"	7"	3"	12"	$3" \times 120"$	8'-0"	3'-6"	7'-0"
B-20018	$25\frac{1}{2}$"	33"	18"	$3\frac{3}{8}$"	$26\frac{1}{2}$"	$5\frac{1}{2}$"	7"	3"	12"	$3" \times 120"$	9'-6"	3'-6"	7'-0"

MISSOURI HIGHWAYS AND TRANSPORTATION COMMISSION
105 WEST CAPITOL
JEFFERSON CITY, MO 65102
1-888-ASK-MODOT (1-888-275-6636)

STATE OF MISSOURI
EILEEN H. RACKERS
NUMBER PE-28336
PROFESSIONAL ENGINEER
THIS SHEET HAS BEEN SIGNED, SEALED AND DATED ELECTRONICALLY.

HIGHWAY SIGNING
TUBULAR SUPPORT STEEL
TYPE B

DATE EFFECTIVE: 10/01/2016
DATE PREPARED: 8/11/2016

903.08H

IF A SEAL IS PRESENT ON THIS SHEET IT HAS BEEN ELECTRONICALLY SEALED AND DATED.