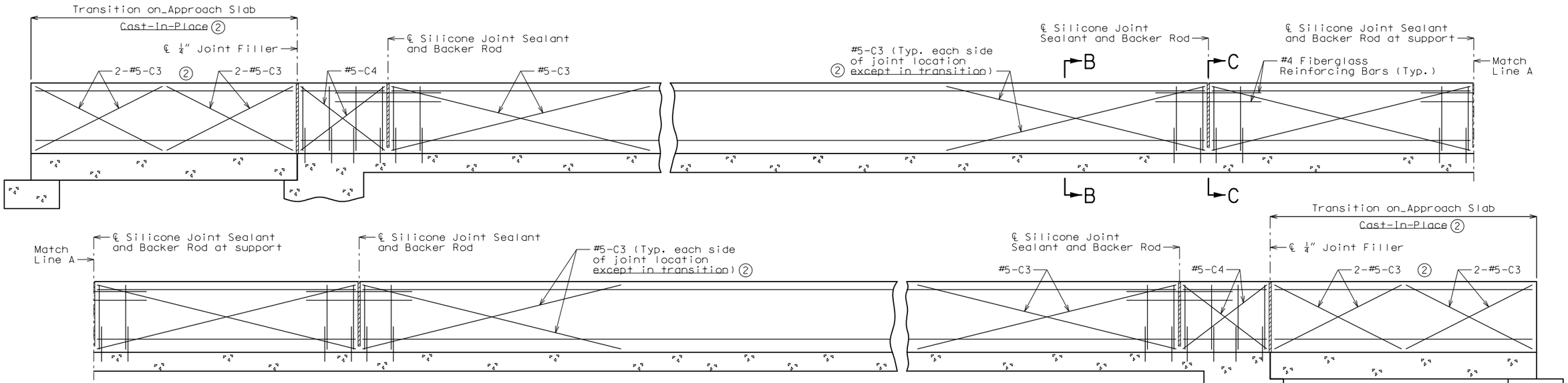

TYPICAL ELEVATION OF MEDIAN AT SUPPORT LOCATIONS

Standard Drawing Guidance (do not show on plans):

In each span, the length of the C bars is based on the shortest distance between the joints for that span. Modify details if lengths vary by span. The C1 and C2 bar marks are reserved the outside barriers.

The length of the C bars above the approach slab shall match the shortest C bars in the spans (not the C4 bars).

List C bars in the Bill of Reinforcing Steel and note that bars are for the slip-form option only.

(1) Slip-form only allowed in the median of the first bridge due to the difficulty of constructing joint sealant and backer rods, consult SPM before using this standard sheet.

(2) Transition on approach slab is preferred to be formed as cast-in-place. Consult SPM when slip-form will be used at transition and add #5-C bars. Remove details that don't apply either case including underline portions of notes or remove the underline.

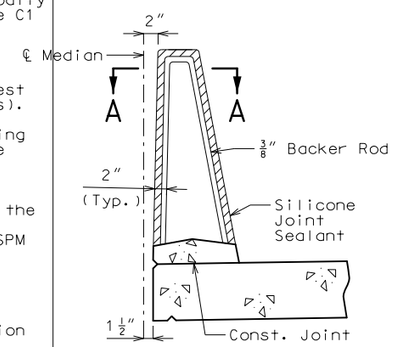

SECTION THRU JOINT

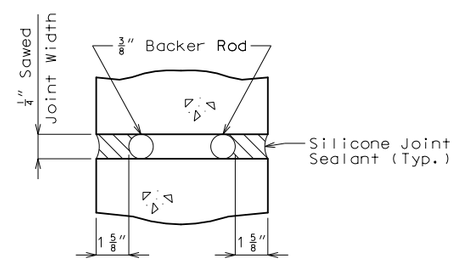

SECTION A-A

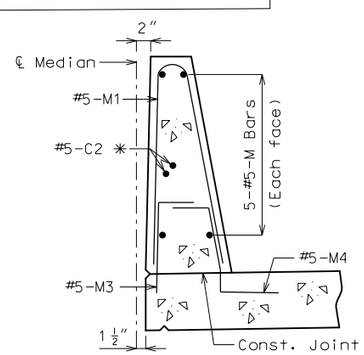

SECTION B-B

✳ Each side of joint location except in transition. (2)

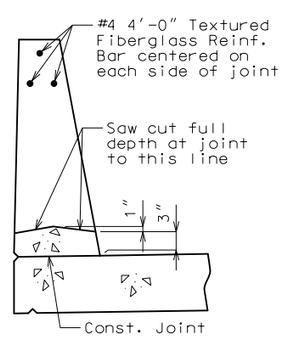

SECTION C-C

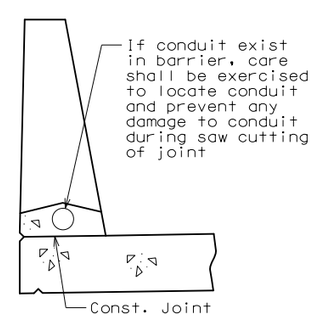

SECTION C-C

(Use when conduit required)

OPTIONAL SLIP-FORM BARRIER CURB (TYPE D) (1)

General Notes:

Top of barrier curb (Type D) and median barrier curb transition (Type C) shall be built parallel to grade with barrier curb joints (except at end bents) normal to grade.

All exposed edges of barrier curb (Type D) and median barrier curb transition (Type C) shall have either a 1/2-inch radius or a 3/8-inch bevel, unless otherwise noted.

Payment for all concrete and reinforcement, complete in place, will be considered completely covered by the contract unit price for Barrier Curb (Type D) and Median Barrier Curb Transition (Type C) per linear foot. (2)

Concrete in the barrier curb (Type D) and median barrier curb transition (Type C) shall be Class B-1.

Measurement of barrier curb (Type D) is to the nearest linear foot for each structure, measured along the outside top of slab from end of slab to end of slab. Measurement of median barrier curb transition (Type C) is to the nearest linear foot for each structure, measured along the top of slab at centerline median from centerline sleeper slab to end of slab.

Concrete traffic barrier delineators shall be placed on top of the barrier curb (Type D) and median barrier curb transition (Type C) as shown on Missouri Standard Plans 617.10 and in accordance with Sec 617. Delineators on bridges with two-lane, two-way traffic shall have retroreflective sheeting on both sides. Concrete traffic barrier delineators will be considered completely covered by the contract unit price for Barrier Curb (Type D).

Joint sealant and backer rods shall be used on all slip-form barrier curbs instead of joint filler and shall be in accordance with Sec 717 for silicone joint sealant for saw cut and formed joints (except at end of slab of end bents).

Plastic waterstop shall not be used with slip-form option.

For slip-form option, all sides of the barrier curb (Type D) and median barrier curb transition (Type C) shall have a vertically broomed finish and the curb top shall have a transversely broomed finish.

C bars (slip-form option only) shall be used in addition to cast-in-place conventional forming reinforcement for bridge barrier curb (Type D) and median barrier curb transition (Type C).

Cost of silicone joint sealant and backer rod, complete in place, will be considered completely covered by the contract unit price for Barrier Curb (Type D).

"THIS MEDIA SHOULD NOT BE CONSIDERED A CERTIFIED DOCUMENT."

DATE PREPARED	5/11/2016
ROUTE	✳
STATE	MO
DISTRICT	BR
SHEET NO.	✳
COUNTY	✳
JOB NO.	✳
CONTRACT ID.	
PROJECT NO.	
BRIDGE NO.	MBAC 2

DESCRIPTION	DATE

MISSOURI HIGHWAYS AND TRANSPORTATION COMMISSION
105 WEST CAPITOL
JEFFERSON CITY, MO 65102
1-888-ASK-MODOT (1-888-275-6636)

IF A SEAL IS PRESENT ON THIS SHEET IT HAS BEEN ELECTRONICALLY SEALED AND DATED.

Detailed
Checked

Note: This drawing is not to scale. Follow dimensions.

Sheet No. of