GENERAL NOTES:

Anchor bolts for Type E bearings shall be Ø ASTM F1554 Grade 55 swedged bolts and shall extend into the concrete with ASTM A563 Grade A Hex or Heavy Hex nuts. Actual manufacturer's certified mill test reports (chemical and mechanical) shall be provided. Use ASTM F436 hardened washers for the fixed bearings and no heavy hexagon nuts or hardened washers for the expansion bearings. Swedging shall be 1" less than extension into the concrete.

Anchor bolts, hardened washers and heavy hexagon nuts shall be coated with a minimum of two coats of inorganic zinc primer (5 mils minimum).

Weight of the anchor bolts, hardened washers and heavy hexagon nuts for bearings are included in the weight of the Fabricated Structural Steel.

"∽" Indicates machine finish surface.

(1) Bonded lubricant

A lubricant coating shall be applied in the shop to both mating surfaces of the bearing assembly. The lubricant, method of cleaning, and application shall meet the requirements of MIL-L-23398 and MIL-L-46147. The coated areas shall be protected for shipping and erection.

Shop drawings are not required for the lead plates and the preformed fabric pads.

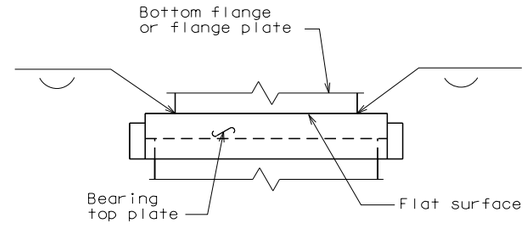

WELDING DETAILS

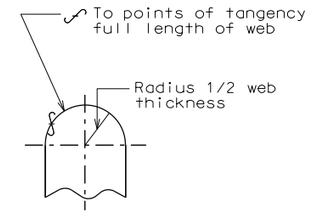

END VIEW OF WEB

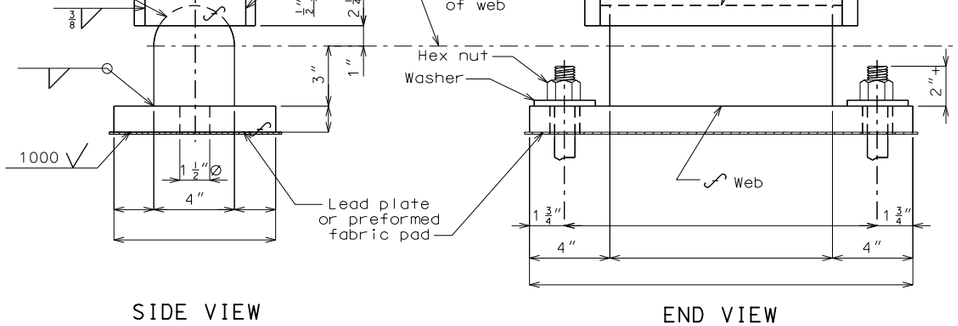

SIDE VIEW

END VIEW

FIXED

Number Required:

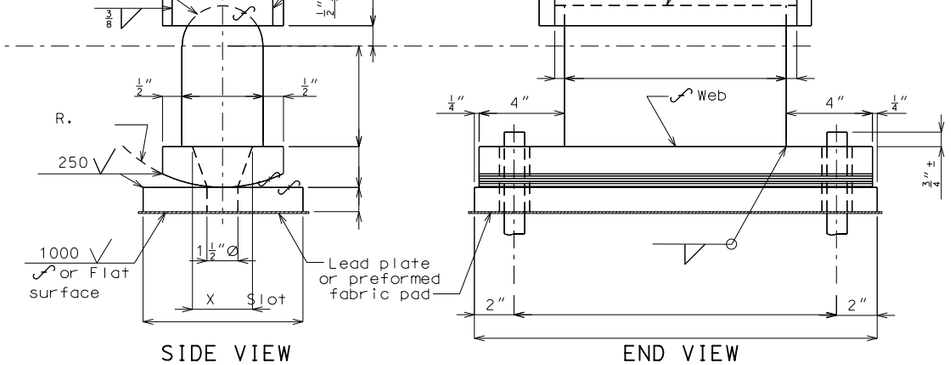

SIDE VIEW

END VIEW

EXPANSION

Number Required:

TYPE E BEARINGS

(Estimated Weight pounds)

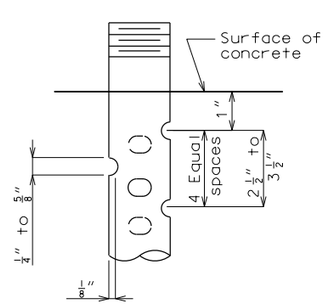

DETAIL FOR 3/4"Ø
THRU 2 1/2"Ø ANCHOR BOLTS

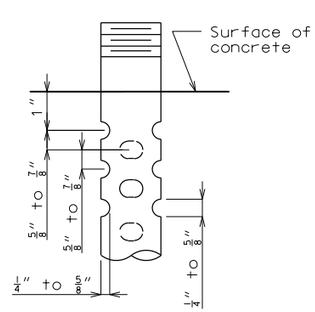

OPTIONAL DETAIL FOR 1 3/8"Ø
THRU 2 1/2"Ø ANCHOR BOLTS

SWEDGE ANCHOR BOLT DETAILS

Detailed
Checked

Note: This drawing is not to scale. Follow dimensions.

Sheet No. of

"THIS MEDIA SHOULD NOT BE CONSIDERED A CERTIFIED DOCUMENT."

DATE PREPARED 12/18/2013	
ROUTE ✳	STATE MO
DISTRICT BR	SHEET NO. ✳
COUNTY ✳	
JOB NO. ✳	
CONTRACT ID.	
PROJECT NO.	
BRIDGE NO. BRG 3	

DESCRIPTION

DATE

MISSOURI HIGHWAYS AND TRANSPORTATION COMMISSION

105 WEST CAPITOL
JEFFERSON CITY, MO 65102
1-888-ASK-MODOT (1-888-275-6636)

IF A SEAL IS PRESENT ON THIS SHEET IT HAS BEEN ELECTRONICALLY SEALED AND DATED.