NOT APPROVED

REFERENCE DATE: 11-6-98

STATE OF MINNESOTA
DEPARTMENT OF TRANSPORTATION

ECCENTRIC LOADER BREAKAWAY CABLE TERMINAL (ELT)

INSTALLATION DETAILS FOR GUARDRAIL END TREATMENT

SPECIFICATION REFERENCE 2554

REVISED 11-6-98

STANDARD PLATE NO. M8329F

SHEET 1 OF 4

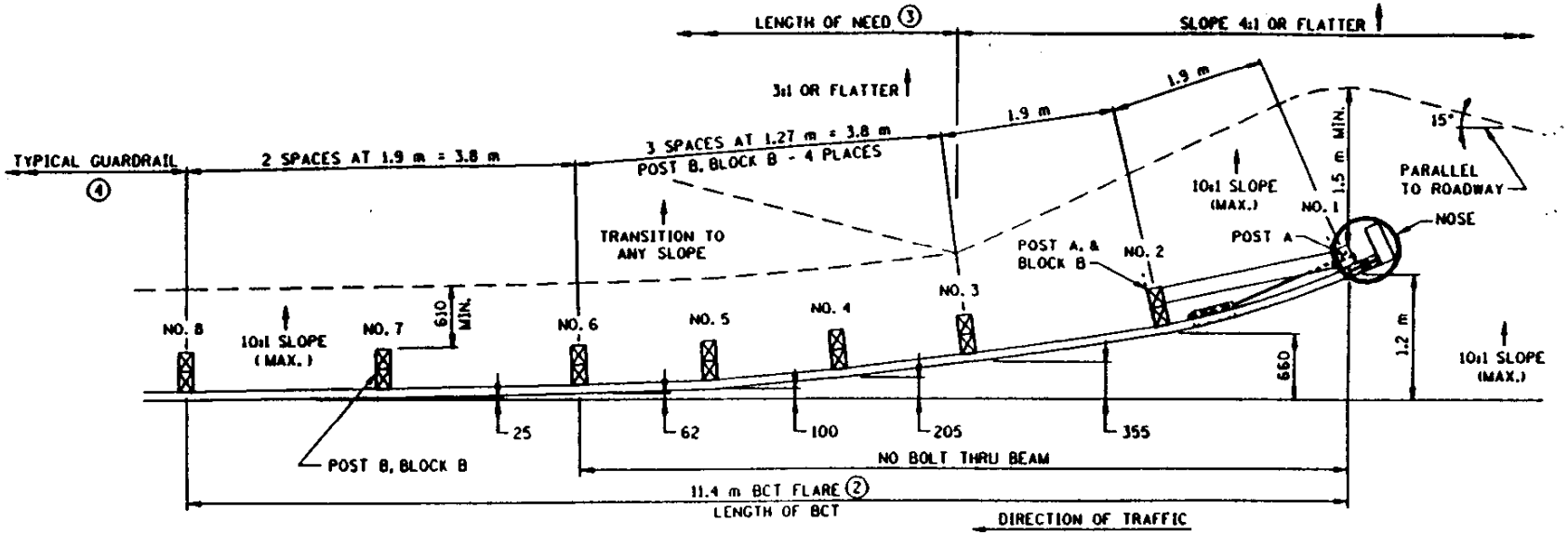

PLAN VIEW

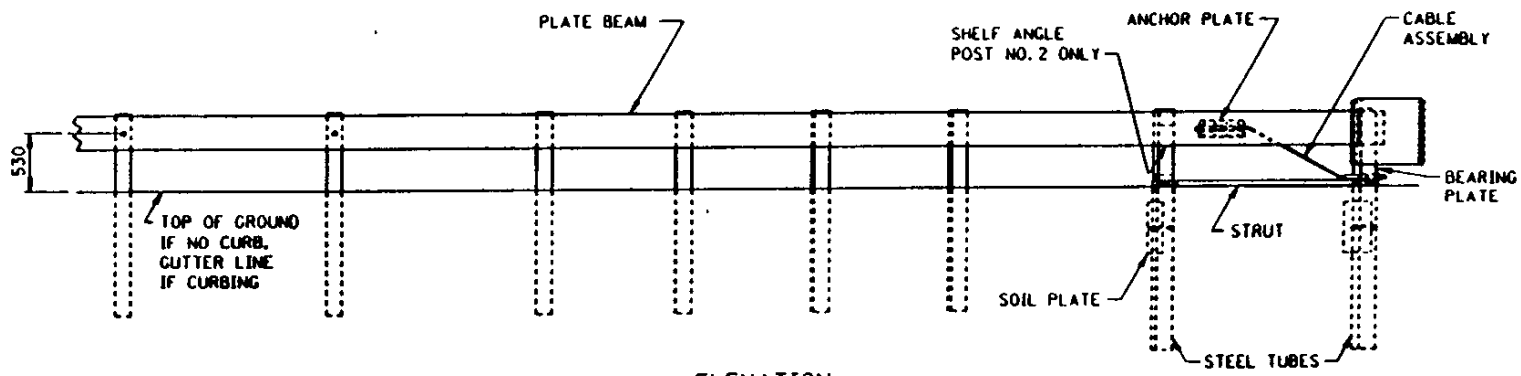

ELEVATION

NOTES:

1. SEE "A GUIDE TO STANDARDIZED HIGHWAY BARRIER RAIL HARDWARE", FOR ADDITIONAL HARDWARE INFORMATION. THE MN/DOT STANDARD SPECIFICATIONS FOR HIGHWAY CONSTRUCTION SHALL GOVERN.

② ECCENTRIC LOADER BCT - PAY ITEM LENGTH IS 11.4 METERS.

③ LENGTH-OF-NEED BEGINS 3.8 METERS FROM BCT NOSE.

④ TANGENT GUARDRAIL SHOWN. SEE CHAPTER 10 IN ROAD DESIGN MANUAL FOR PARABOLIC FLARE APPLICATIONS.

NOTE: ALL DIMENSIONS ARE IN MILLIMETERS, EXCEPT AS NOTED.

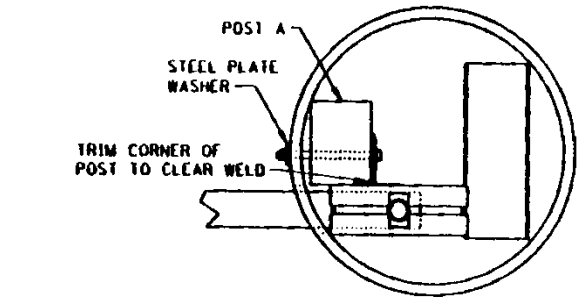

TOP VIEW

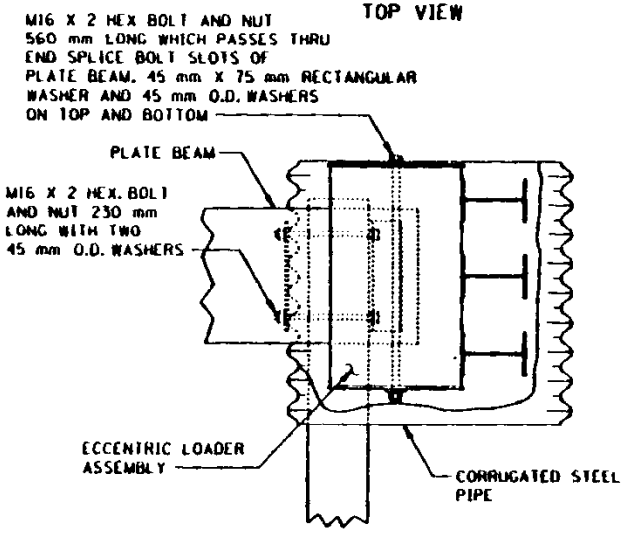

SIDE VIEW

NOSE DETAILS

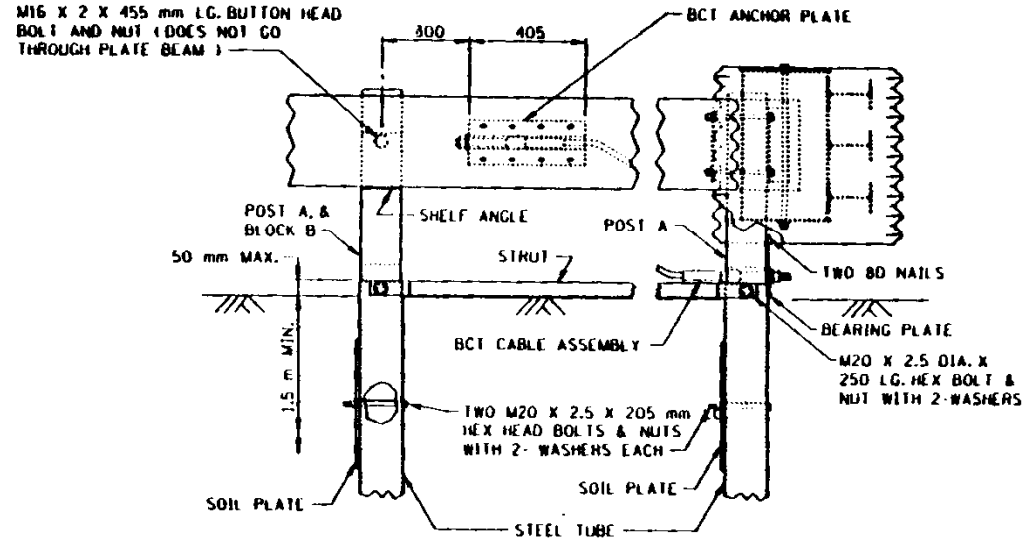

ELEVATION - NOSE ASSEMBLY

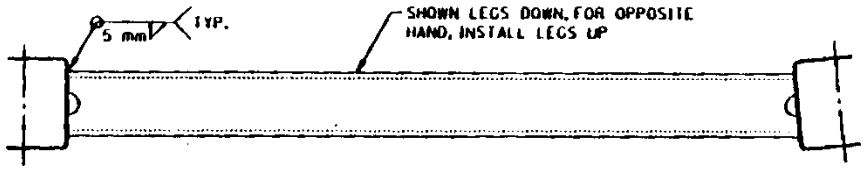

PLAN VIEW

STRUT AND YOKE ASSEMBLY

NOTES:

CORRUGATED STEEL PIPE AS PER SPEC. 3226.
STRUCTURAL STEEL AS PER SPEC. 3306, UNLESS OTHERWISE NOTED.
GALVANIZE STRUCTURAL STEEL AS PER SPEC. 3392 & 3394 AFTER FABRICATION, UNLESS OTHERWISE NOTED.

NOTE: ALL DIMENSIONS ARE IN MILLIMETERS, EXCEPT AS NOTED.

APPROVED FEBRUARY 19, 1992
DIRECTOR
OFFICE OF TECHNICAL SUPPORT

STATE OF MINNESOTA
DEPARTMENT OF TRANSPORTATION

BREAKAWAY CABLE TERMINAL (ELT)
ECCENTRIC LOADER
NOSE ASSEMBLY DETAILS

SPECIFICATION REFERENCE: 2554

STANDARD PLATE NO. M8329F

Enclosure 1 (2 of 4)

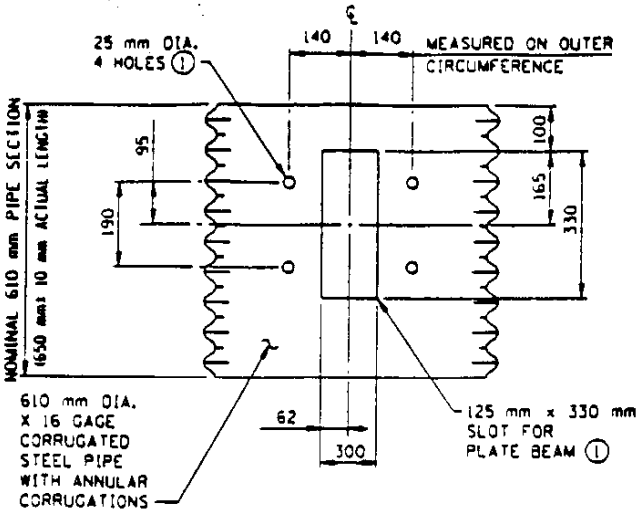

CORRUGATED STEEL PIPE

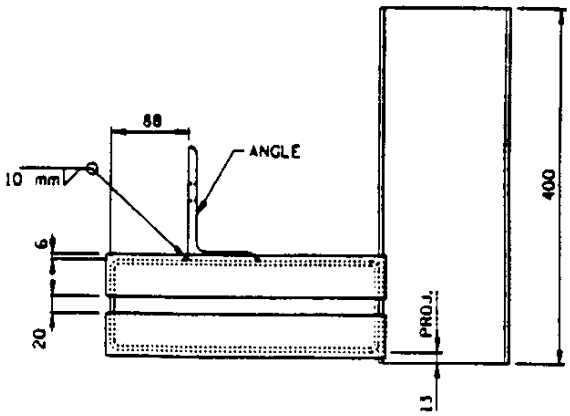

TOP VIEW

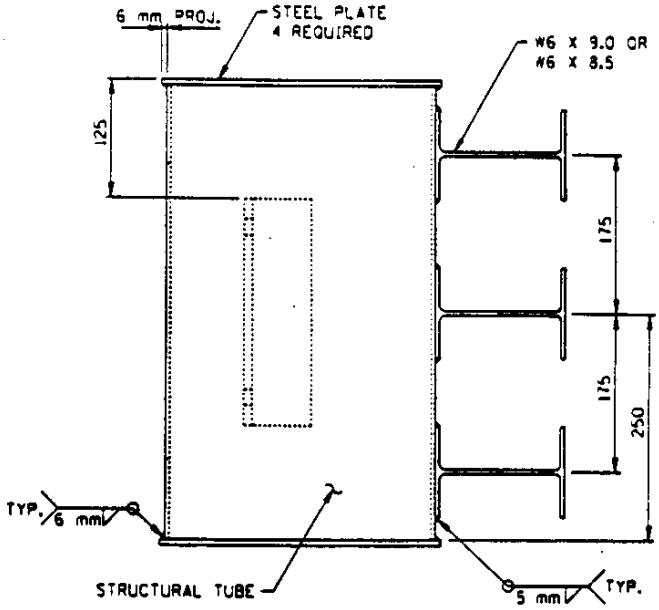

SIDE VIEW

ECCENTRIC LOADER ASSEMBLY

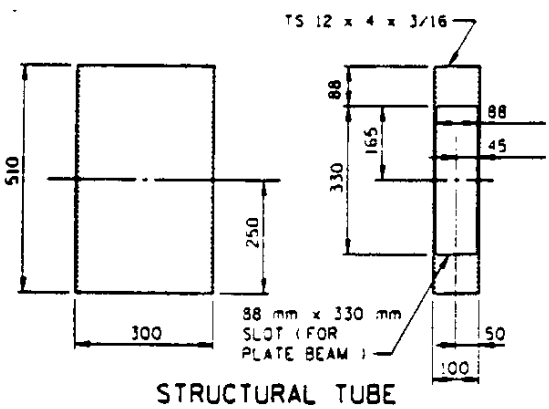

STRUCTURAL TUBE

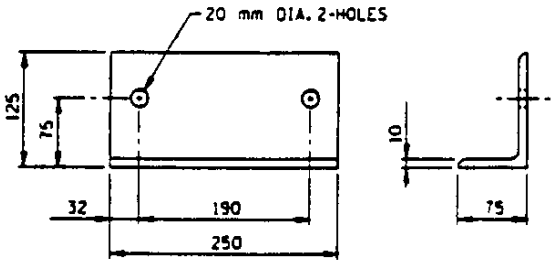

ANGLE

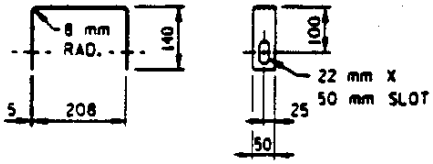

TOP VIEW SIDE VIEW

YOKE
(2 REQUIRED)

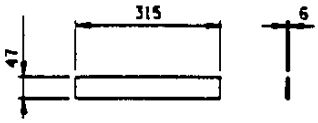

STEEL PLATE
(4 REQUIRED)

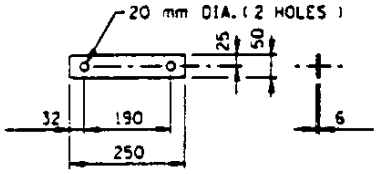

STEEL PLATE WASHER

(1) DO NOT USE FLAME CUTTING FOR THESE OPENINGS.

NOTE:
ALL DIMENSIONS ARE IN MILLIMETERS, EXCEPT AS NOTED.

APPROVED February 19, 1992 R.M. Hill DIRECTOR OFFICE OF TECHNICAL SUPPORT	STATE OF MINNESOTA DEPARTMENT OF TRANSPORTATION ECCENTRIC LOADER BREAKAWAY CABLE TERMINAL (ELT) MISCELLANEOUS NOSE DETAILS	SPECIFICATION REFERENCE 2554	STANDARD PLATE NO. M8329F SHEET 3 OF 4

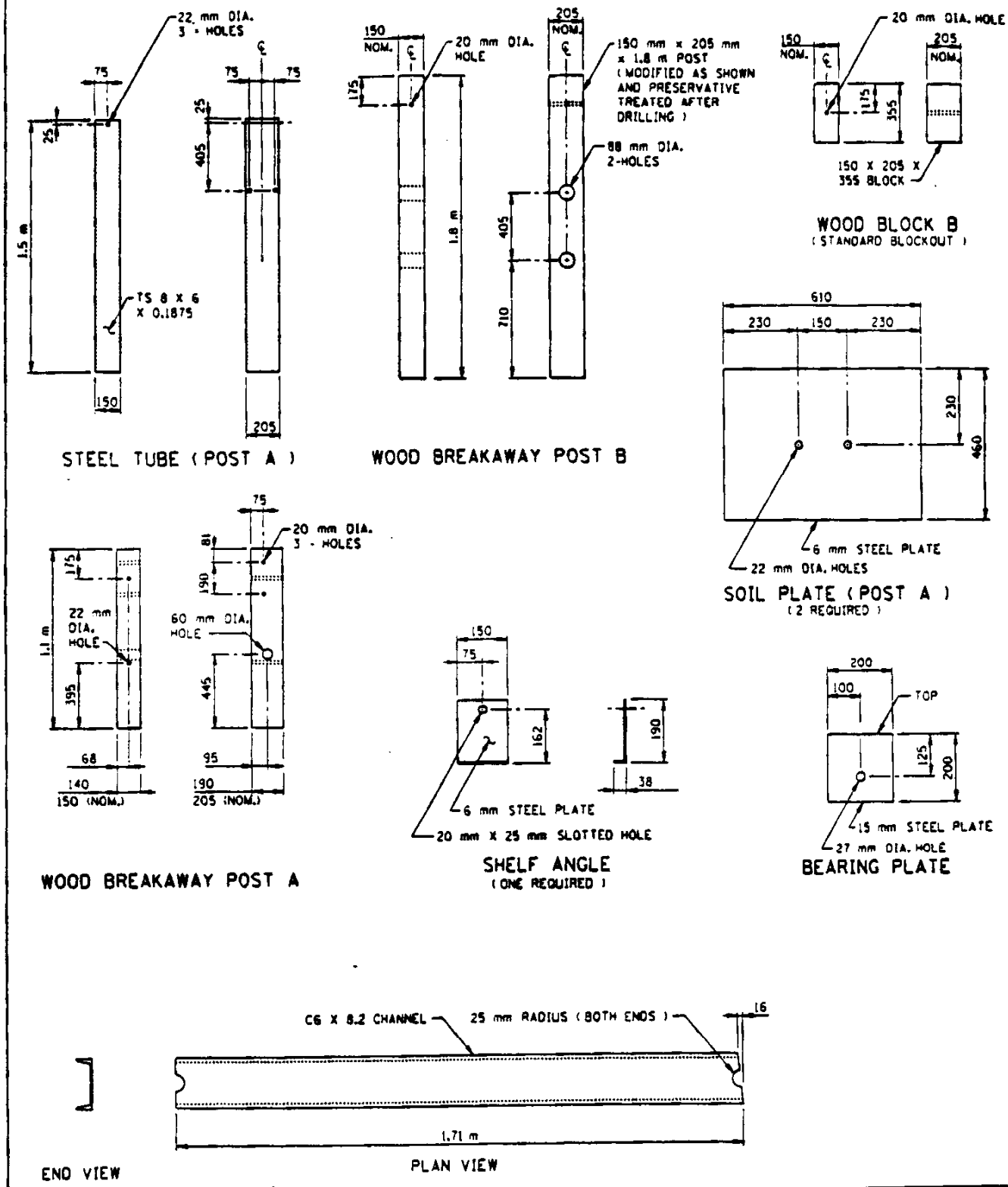

NOTE:
ALL DIMENSIONS ARE IN MILLIMETERS, EXCEPT AS NOTED.

APPROVED February 19, 1992 R.M. Hill DIRECTOR OFFICE OF TECHNICAL SUPPORT	STATE OF MINNESOTA DEPARTMENT OF TRANSPORTATION ECCENTRIC LOADER BREAKAWAY CABLE TERMINAL (ELT) POST AND STRUT DETAILS	SPECIFICATION REFERENCE 2554	STANDARD PLATE NO. M8329F SHEET 4 OF 4