Missouri Department of Transportation

Bridge Division

Bridge Design Manual

Section 2.5

Revised 11/10/2004

Click Here for Index

Index of General Quantities

2.5.1 Index of Quantities

2.5.2 Computations of Estimated Quantities

General
Weight of Bolts
Piles
Pre-bore for Piling
Drilled Shafts
Concrete
Polymer Concrete
Non-Destructive Testing
Temporary Shoring
MSE Retaining Walls
Structural Steel Protective Coatings (Non-Weathering Steel)
Structural Steel Protective Coatings (Weathering Steel)
Protective Coating for Concrete
Asphaltic Concrete Pavement
Seal Coat
Tack Coat
Excavation

2.5.1 Index of Quantities

The following list of pay items shall be used as a guide when preparing the Table of Estimated Quantities. The pay items shall be listed on the plans in numerical order according to the Item Number. The Item Number is for information only and is not to be listed in the Table of Estimated Quantities. For pay items not listed, see the Plans Review Section.

Item Number	Accuracy	Units	Item Description
	Indicates this item shall be used only as approved by Plans Review Section.		
206-10.00 206-10.05	5.0	cu. yard cu. meter	Class 1 Excavation
206-10.03 206-10.07	1.0	cu. yard cu. meter	Class 1 Excavation in Rock (*)
206-20.00 206-20.05	1.0	cu. yard cu. meter	Class 2 Excavation
206-20.03 206-20.07	1.0	cu. yard cu. meter	Class 2 Excavation in Rock (*)
206-33.00 206-33.05	5.0	cu. yard cu. meter	Class 4 Excavation
206-34.00 206-34.05	1.0	cu. yard cu. meter	Class 4 Excavation in Rock (*)
** Note: Use when cross-sections indicate rock will be encountered and quantity is more than 10 cu. Yard. If there is less than 10 cu. yards of total excavation in rock, no Excavation in Rock pay items should be listed in the Estimated Quantities. Excavation in rock will be paid in accordance with Sec 109. Check with Project Manager when computing this item.*			
206-36.00 206-36.05	1.0 0.5	linear foot meter	Supplementary Foundation Test Holes (NX)
206-36.10 206-36.15	1.0 0.5	linear foot meter	Supplementary Cored Holes
206-40.00 206-40.05	1.0	cu. yard cu. meter	Porous Backfill
206-45.00 206-45.05	1.0	cu. yard cu. meter	Select Granular Backfill for Structural Systems
206-55.00	1.0	lump sum	Temporary Shoring
206-60.02 to 206-60.12	1.0	lump sum	Cofferdams - Bent xx *Note: Use a separate pay item for each bent. Item numbers established for only Bent 2 thru Bent 12.*

Item Number	Accuracy	Units	Item Description
	Indicates this item shall be used only as approved by Plans Review Section.		
206-99.01	1.0	lump sum	Misc.
206-99.02	1.0	each	Misc.
206-99.03 206-99.03M	1.0 0.5	linear foot meter	Misc.
206-99.04	1.0	sq. foot	Misc.
206-99.05 206-99.05M	0.1	sq. yard sq. meter	Misc.
206-99.07 206-99.07M	1.0	cu. yard cu. meter	Misc.
216-05.00	1.0	lump sum	Removal of Bridges
216-05.01	1.0	lump sum	Match Marking and Storing Superstructure
216-10.00 216-10.50	1.0	sq. yard sq. meter	Scarification of Bridge Decks *Note: Do not use on concrete overlay removals.*
216-15.00 216-15.50	1.0 0.1	sq. foot sq. meter	Removal of Seal Coat *Note: Do not use for unbonded seal coat removal.*
216-15.01 216-15.51	1.0 0.1	sq. foot sq. meter	Removal of Asphalt Wearing Surface
216-15.02 216-15.52	1.0 0.1	sq. foot sq. meter	Removal of Concrete Wearing Surface *Note: Use for all concrete wearing surfaces.*
216-20.00 216-20.50	1.0 0.5	linear foot meter	Removal and Storage of Existing Bridge Rails
216-25.00 216-25.50	1.0 0.1	sq. foot sq. meter	Removal of Existing Bridge Decks
216-30.00 216-30.50	1.0 0.1	sq. foot sq. meter	Partial Removal of Existing Bridge Decks
216-35.00	1.0	lump sum	Partial Removal of Culvert Concrete
216-35.01	1.0	lump sum	Partial Removal of Culvert-Bridge Concrete
216-35.02	1.0	lump sum	Partial Removal of Substructure Concrete
216-40.00 216-40.50	1.0 0.5	linear foot meter	Curb Removal *Note: Use for just removal of curbs including for thrie beam installation.*
216-45.00 216-45.50	1.0 0.5	linear foot meter	Removal of Existing Expansion Joints & Adjacent Concrete *Note: Also use Concrete and Reinforcing Steel pay items for replacement of expansion joint system.*
216-50.00 216-50.50	1.0 0.5	linear foot meter	Removal of Existing Expansion Joint Seal or Sealant *Note: Also use Concrete and Reinforcing Steel pay items for replacement of expansion joint system.*
216-55.00	1.0	lump sum	Removal of Cathodic Protection System

Item Number	Accuracy	Units	Item Description
	Indicates this item shall be used only as approved by Plans Review Section.		
216-99.01	1.0	lump sum	Misc.
216-99.03 216-99.03M	1.0 0.5	linear foot meter	Misc.
216-99.04	1.0	sq. foot	Misc.
216-99.05 216-99.05M	0.1	sq. yard sq. meter	Misc.
403-10.50 403-10.55	1.0	sq. yard sq. meter	Alternate Asphaltic Concrete Wearing Surface (Bridge)
407-10.05 407-10.00	10.0 50.0	gallon liter	Tack Coat
409-40.00 409-40.05	1.0	sq. yard sq. meter	Seal Coat, Grade A
503-10.10 503-10.15	1.0	sq. yard sq. meter	Bridge Approach Slab (Bridge)
505-00.01 505-00.05	1.0	sq. yard sq. meter	Alternate Concrete Wearing Surface
505-10.00 505-10.50	1.0	sq. yard sq. meter	Low Slump Concrete Wearing Surface
505-20.00 505-20.50	1.0	sq. yard sq. meter	Latex Modified Concrete Wearing Surface
505-20.01 505-20.51	1.0	sq. yard sq. meter	Latex Modified High Early Strength Concrete Wearing Surface
505-30.00 505-30.50	1.0	sq. yard sq. meter	Silica Fume Concrete Wearing Surface
505-99.05 505-99.05M	1.0	sq. yard sq. meter	Misc.
605-20.10A 605-20.15A	1.0 0.5	linear foot meter	Structural Underdrain
607-10.50 607-15.50	1.0 0.5	linear foot meter	Chain-Link Fence (Retaining Walls)
607-10.54 607-15.54	1.0 0.5	linear foot meter	(42 in.) Property Fence (Structures) 1065 mm Property Fence (Structures)
607-10.55 607-15.55	1.0 0.5	linear foot meter	(60 in.) Property Fence (Structures) 1525 mm Property Fence (Structures)
607-10.56 607-15.56	1.0 0.5	linear foot meter	(72 in.) Property Fence (Structures) 1830 mm Property Fence (Structures)
607-10.57 607-15.57	1.0 0.5	linear foot meter	(84 in.) Property Fence (Structures) 2135 mm Property Fence (Structures)

Item Number	Accuracy	Units	Item Description
	Indicates this item shall be used only as approved by Plans Review Section.		
607-10.58 607-15.58	1.0 0.5	linear foot meter	(96 in.) Property Fence (Structures) 2440 mm Property Fence (Structures)
607-10.60 607-15.60	1.0 0.5	linear foot meter	Pedestrian Fence (Structures) Pedestrian Fence (Structures)
607-10.65 607-15.65	1.0 0.5	linear foot meter	(60 in.) Pedestrian Fence (Structures) 1525 mm Pedestrian Fence (Structures)
607-10.66 607-15.66	1.0 0.5	linear foot meter	(72 in.) Pedestrian Fence (Structures) 1830 mm Pedestrian Fence (Structures)
607-10.67 607-15.67	1.0 0.5	linear foot meter	(112 in.) Curved Top Pedestrian Fence (Structures) (2800 mm) Curved Top Pedestrian Fence (Structures)
607-99.03 607-99.03M	1.0 0.5	linear foot meter	Misc.
615-10.05	1.0	lump sum	Water Transportation for Engineer
623-30.00 623-30.05	1.0	sq. yard sq. meter	Epoxy Polymer Concrete Overlay
623-40.00 623-40.05	1.0 0.05	cu. foot cu. meter	Polymer Concrete
623-99.05 623-99.05M	1.0	sq. yard sq. meter	Misc.
701-11.00 701-11.20	0.10 0.05	linear foot meter	Drilled Shafts (1 ft. 0 in. Dia.) Drilled Shafts (300 mm Dia.)
701-11.01 701-11.21	0.10 0.05	linear foot meter	Drilled Shafts (1 ft. 6 in. Dia.) Drilled Shafts (450 mm Dia.)
701-11.02 701-11.22	0.10 0.05	linear foot meter	Drilled Shafts (2 ft. 0 in. Dia.) Drilled Shafts (600 mm Dia.)
701-11.03 701-11.23	0.10 0.05	linear foot meter	Drilled Shafts (2 ft. 6 in. Dia.) Drilled Shafts (750 mm Dia.)
701-11.04 701-11.24	0.10 0.05	linear foot meter	Drilled Shafts (3 ft. 0 in. Dia.) Drilled Shafts (900 mm Dia.)
701-11.05 701-11.25	0.10 0.05	linear foot meter	Drilled Shafts (3 ft. 6 in. Dia.) Drilled Shafts (1050 mm Dia.)
701-11.06 701-11.26	0.10 0.05	linear foot meter	Drilled Shafts (4 ft. 0 in. Dia.) Drilled Shafts (1200 mm Dia.)
701-11.07 701-11.27	0.10 0.05	linear foot meter	Drilled Shafts (4 ft. 6 in. Dia.) Drilled Shafts (1350 mm Dia.)
701-11.08 701-11.28	0.10 0.05	linear foot meter	Drilled Shafts (5 ft. 0 in. Dia.) Drilled Shafts (1500 mm Dia.)

Item Number	Accuracy	Units	Item Description
	Indicates this item shall be used only as approved by Plans Review Section.		
701-11.09 701-11.29	0.10 0.05	linear foot meter	Drilled Shafts (5 ft. 6 in. Dia.) Drilled Shafts (1650 mm Dia.)
701-11.10 701-11.30	0.10 0.05	linear foot meter	Drilled Shafts (6 ft. 0 in. Dia.) Drilled Shafts (1800 mm Dia.)
701-11.11 701-11.31	0.10 0.05	linear foot meter	Drilled Shafts (6 ft. 6 in. Dia.) Drilled Shafts (1950 mm Dia.)
701-11.12 701-11.32	0.10 0.05	linear foot meter	Drilled Shafts (7 ft. 0 in. Dia.) Drilled Shafts (2100 mm Dia.)
701-11.13 701-11.33A	0.10 0.05	linear foot meter	Drilled Shafts (7 ft. 6 in. Dia.) Drilled Shafts (2250 mm Dia.)
701-11.14 701-11.34A	0.10 0.05	linear foot meter	Drilled Shafts (8 ft. 0 in. Dia.) Drilled Shafts (2400 mm Dia.)
701-11.15 701-11.35A	0.10 0.05	linear foot meter	Drilled Shafts (8 ft. 6 in. Dia.) Drilled Shafts (2550 mm Dia.)
701-11.16 701-11.36	0.10 0.05	linear foot meter	Drilled Shafts (9 ft. 0 in. Dia.) Drilled Shafts (2700 mm Dia.)
701-11.17 701-11.37	0.10 0.05	linear foot meter	Drilled Shafts (9 ft. 6 in. Dia.) Drilled Shafts (2850 mm Dia.)
701-11.18 701-11.38	0.10 0.05	linear foot meter	Drilled Shafts (10 ft. 0 in. Dia.) Drilled Shafts (3000 mm Dia.)
701-12.00 701-12.20	0.10 0.05	linear foot meter	Rock Sockets (1 ft. 0 in. Dia.) Rock Sockets (300 mm Dia.)
701-12.01 701-12.21	0.10 0.05	linear foot meter	Rock Sockets (1 ft. 6 in. Dia.) Rock Sockets (450 mm Dia.)
701-12.02 701-12.22	0.10 0.05	linear foot meter	Rock Sockets (2 ft. 0 in. Dia.) Rock Sockets (600 mm Dia.)
701-12.03 701-12.23	0.10 0.05	linear foot meter	Rock Sockets (2 ft. 6 in. Dia.) Rock Sockets (750 mm Dia.)
701-12.04 701-12.24	0.10 0.05	linear foot meter	Rock Sockets (3 ft. 0 in. Dia.) Rock Sockets (900 mm Dia.)
701-12.05 701-12.25	0.10 0.05	linear foot meter	Rock Sockets (3 ft. 6 in. Dia.) Rock Sockets (1050 mm Dia.)
701-12.06 701-12.26	0.10 0.05	linear foot meter	Rock Sockets (4 ft. 0 in. Dia.) Rock Sockets (1200 mm Dia.)
701-12.07 701-12.27	0.10 0.05	linear foot meter	Rock Sockets (4 ft. 6 in. Dia.) Rock Sockets (1350 mm Dia.)
701-12.08 701-12.28A	0.10 0.05	linear foot meter	Rock Sockets (5 ft. 0 in. Dia.) Rock Sockets (1500 mm Dia.)
701-12.09 701-12.29A	0.10 0.05	linear foot meter	Rock Sockets (5 ft. 6 in. Dia.) Rock Sockets (1650 mm Dia.)
701-12.10 701-12.30A	0.10 0.05	linear foot meter	Rock Sockets (6 ft. 0 in. Dia.) Rock Sockets (1800 mm Dia.)
701-12.11 701-12.31A	0.10 0.05	linear foot meter	Rock Sockets (6 ft. 6 in. Dia.) Rock Sockets (1950 mm Dia.)
701-12.12 701-12.32A	0.10 0.05	linear foot meter	Rock Sockets (7 ft. 0 in. Dia.) Rock Sockets (2100 mm Dia.)

Item Number	Accuracy	Units	Item Description
	Indicates this item shall be used only as approved by Plans Review Section.		
701-12.13 701-12.33A	0.10 0.05	linear foot meter	Rock Sockets (7 ft. 6 in. Dia.) Rock Sockets (2250 mm Dia.)
701-12.14 701-12.34A	0.10 0.05	linear foot meter	Rock Sockets (8 ft. 0 in. Dia.) Rock Sockets (2400 mm Dia.)
701-12.15 701-12.35A	0.10 0.05	linear foot meter	Rock Sockets (8 ft. 6 in. Dia.) Rock Sockets (2550 mm Dia.)
701-12.16 701-12.36A	0.10 0.05	linear foot meter	Rock Sockets (9 ft. 0 in. Dia.) Rock Sockets (2700 mm Dia.)
701-12.17 701-12.37	0.10 0.05	linear foot meter	Rock Sockets (9 ft. 6 in. Dia.) Rock Sockets (2850 mm Dia.)
701-13.00	1.0	Each	Supplementary Television Camera Inspection
701-14.00 701-14.50	0.10 0.05	linear foot meter	Foundation Inspection Holes
701-15.00 701-15.50	0.10 0.05	linear foot meter	Concrete Coring
701-16.00	1	each	Sonic Logging Testing
701-17.00	1	each	Drilled Shaft Load Tests
701-99.01	1.0	lump sum	Misc.
701-99.02	1.0	each	Misc.
701-99.03 701-99.03M	0.1 0.05	linear foot meter	Misc.
702-10.10 702-05.10	1.0 0.5	linear foot meter	Structural Steel Piles (10 in.) Structural Steel Piles (250 mm)
702-10.12 702-05.12	1.0 0.5	linear foot meter	Structural Steel Piles (12 in.) Structural Steel Piles (310 mm)
702-10.14 702-05.14	1.0 0.5	linear foot meter	Structural Steel Piles (14 in.) Structural Steel Piles (360 mm)
702-11.14 702-11.35	1.0 0.5	linear foot meter	Cast-In-Place Concrete Piles (14 in.) 350 mm Cast-In-Place Concrete Piles
702-11.20 702-11.50	1.0 0.5	linear foot meter	Cast-In-Place Concrete Piles (20 in.) 500 mm Cast-In-Place Concrete Piles
702-11.24 702-11.60	1.0 0.5	linear foot meter	Cast-In-Place Concrete Piles (24 in.) 600 mm Cast-In-Place Concrete Piles

Item Number	Accuracy	Units	Item Description
	Indicates this item shall be used only as approved by Plans Review Section.		
702-30.00 702-30.05	1.0 0.5	linear foot meter	Test Piles
702-40.00	1.0	each	Loading Tests
702-50.01	1.0	each	Dynamic Pile Testing
702-50.02	1.0	each	Pile Wave Analysis
702-50.03 702-50.53	1.0 0.5	linear foot meter	Pilot Hole
702-60.00 702-60.05	1.0 0.5	linear foot meter	Pre-Bore for Piling *Note: Compute this to nearest foot or 0.5 meter for each hole..*
702-70.00	1.0	each	Pile Point Reinforcement
702-99.02	1.0	each	Misc.
702-99.03 702-99.03M	1.0 0.5	linear foot meter	Misc.
703-10.04 703-10.54	1.0	sq. yard sq. meter	Diamond Grinding
703-20.00 703-20.11A	0.10	cu. yard cu. meter	Class B Concrete (Culverts-Bridge)
703-20.01 703-20.12A	0.10	cu. yard cu. meter	Class B Concrete (Culverts)
703-20.02 703-20.13	0.10	cu. yard cu. meter	Class B Concrete (Misc)
703-20.03 703-20.14	0.10	cu. yard cu. meter	Class B Concrete (Substructure)
703-20.09 703-20.15	0.10	cu. yard cu. meter	Class B Concrete (Retaining Walls)
703-20.25	1.0	each	Deadman Anchorage Assembly
703-30.01 703-30.11	0.10	cu. yard cu. meter	Seal Concrete
703-40.01 703-40.00	0.10	cu. yard cu. meter	Class B-1 Concrete
703-40.02 703-40.11	0.10	cu. yard cu. meter	Class B-1 Concrete (Superstructure on Steel and Concrete)
703-40.03 703-40.12	0.10	cu. yard cu. meter	Class B-1 Concrete (Substructure)

Item Number	Accuracy	Units	Item Description
	Indicates this item shall be used only as approved by Plans Review Section.		
703-40.04 703-40.13	0.10	cu. yard cu. meter	Class B-1 Concrete (Superstructure on Steel)
703-40.05 703-40.14	0.10	cu. yard cu. meter	Class B-1 Concrete (Superstructure Voided Slabs)
703-40.06 703-40.15	0.10	cu. yard cu. meter	Class B-1 Concrete (Superstructure Concrete Box Girder)
703-40.07 703-40.16	0.10	cu. yard cu. meter	Class B-1 Concrete (Superstructure Concrete Tee Girder)
703-40.08 703-40.17	0.10	cu. yard cu. meter	Class B-1 Concrete (Superstructure Solid Slab)
703-40.09 703-40.18	0.10	cu. yard cu. meter	Class B-1 Concrete (Retaining Walls)
703-40.10 703-40.19	0.10	cu. yard cu. meter	Class B-1 Concrete (Superstructure Concrete on I-Girder)
703-40.20 703-40.25	0.10	cu. yard cu. meter	Class B-1 Concrete (Superstructure)
703-40.30 703-40.35	0.10	cu. yard cu. meter	Class B-1 Concrete (Barrier Curbs)
703-40.40 703-40.21	0.10	cu. yard cu. meter	Class B-1 Concrete (Culverts-Bridge)
703-40.41 703-40.22	0.10	cu. yard cu. meter	Class B-1 Concrete (Culverts)
703-42.02 703-43.02	0.10	cu. yard cu. meter	Class B-2 Concrete (Superstructure on Steel and Concrete)
703-42.04 703-43.04	0.10	cu. yard cu. meter	Class B-2 Concrete (Superstructure on Steel)
703-42.05 703-43.05	0.10	cu. yard cu. meter	Class B-2 Concrete (Superstructure Voided Slabs)
703-42.06 703-43.06	0.10	cu. yard cu. meter	Class B-2 Concrete (Superstructure Concrete Box Girder)
703-42.07 703-43.07	0.10	cu. yard cu. meter	Class B-2 Concrete (Superstructure Concrete Tee Girder)
703-42.08 703-43.08	0.10	cu. yard cu. meter	Class B-2 Concrete (Superstructure Solid Slab)
703-42.10 703-43.10	0.10	cu. yard cu. meter	Class B-2 Concrete (Superstructure Concrete on I Girder)
703-42.11 703-43.11	0.10	cu. yard cu. meter	Class B-2 Concrete (Superstructure Concrete on Box Girder)

Item Number	Accuracy	Units	Item Description
	Indicates this item shall be used only as approved by Plans Review Section.		
703-42.12 703-43.12	1.0	sq. yard sq. meter	Slab on Steel
703-42.13 703-43.13	1.0	sq. yard sq. meter	Slab on Concrete I-Girder
703-42.14 703-43.14	0.10	cu. yard cu. meter	Class B-2 Concrete
703-42.15 703-43.15	1.0 0.5	linear foot meter	Safety Barrier Curb
703-42.16 703-43.26	1.0	sq. yard sq. meter	Reinforced Concrete Slab Overlay *Note: For prestressed voided slab beams, box girders and double-tees.*
703-42.18 703.43.18	1.0	sq. yard sq. meter	Slab on Concrete Bulb-Tee Girder
703-42.19A 703-43.19A	1.0 0.5	linear foot meter	Barrier Curb (Type D)
703-42.20 703-43.25	1.0	sq. yard sq. meter	Slab on Semi-Deep Abutment
703-42.30 703-43.35	0.10	cu. yard cu. meter	Class B-2 Concrete (Post -Tensioned Overlay)
703-44.10 703-44.15	1.0 0.5	linear foot meter	Median Barrier Curb
703-44.11 703-44.16	1.0 0.5	linear foot meter	Median Barrier Curb (Type C)
703-44.12 703-44.17	1.0 0.5	linear foot meter	Median Barrier Curb Transition
703-44.13 703-44.18	1.0 0.5	linear foot meter	Median Barrier Curb Transition (Type C)
703-44.20 703-44.25A	1.0 0.1	sq. foot sq. meter	Raised Median Barrier
703-44.30 703-44.35A	1.0 0.1	sq. foot sq. meter	Sidewalk (Bridges)
703-45.35 703-45.36	1.0 0.5	linear foot meter	Curb Modification
703-46.00 703-46.50	1.0 0.5	linear foot meter	Curb Blockout
703-60.00A 703-60.10A	0.10	cu. yard cu. meter	Class A-1 Concrete

Item Number	Accuracy	Units	Item Description
	Indicates this item shall be used only as approved by Plans Review Section.		
703-99.01	1.0	lump sum	Misc.
703-99.02	1.0	each	Misc.
703-99.03 703-99.03M	1.0 0.5	linear foot meter	Misc.
703-99.04	1.0	sq. foot	Misc.
703-99.05 703-99.05M	0.1	sq. yard sq. meter	Misc.
703-99.07 703-99.07M	0.1	cu. yard cu. meter	Misc.
704-01.01 704-01.51	1.0 0.1	sq. foot sq. meter	Substructure Repair (Formed)
704-01.02 704-01.52	1.0 0.1	sq. foot sq. meter	Substructure Repair (Unformed)
704-01.03 704-01.53	1.0 0.1	sq. foot sq. meter	Superstructure Repair (Unformed)
704-01.04 704-01.54	50.0* 5.0*	sq. foot sq. meter	Repairing Concrete Deck (Half-Soling)
704-01-05 704-01-55	1.0*	cu. yard cu. meter	Partial Depth Repair
704-01.06 704-01.56	50.0* 5.0*	sq. foot sq. meter	Full Depth Repair
704-01.07 704-01.57	1.0 0.5	linear foot meter	Slab Edge Repair (Bridges)
704-01.08 704-01.58	50.0* 5.0*	sq. foot sq. meter	Modified Deck Repair
704-01.09 704-01.59	1.0	sq. yard sq. meter	Total Surface Hydro Demolition
704-01.10 704-01.60	1.0 0.5	linear foot meter	Epoxy Pressure Injecting
704-01.11 704-01.61	1.0	each	Deck Girder End Repair
704-01.12 704-01.62	50.0* 5.0*	sq. foot sq. meter	Deck Repair with Void Tube Replacement
			* Note: Round quantity up to nearest multiple of 50 sq. ft (5 m^2) or 1 cu. yard (1 m^3)
704-99.01	1.0	lump sum	Misc.
704-99.02	1.0	each	Misc.
704-99.03 704-99.03M	1.0 0.5	linear foot meter	Misc.

Item Number	Accuracy	Units	Item Description
	Indicates this item shall be used only as approved by Plans Review Section.		
704-99.04	1.0	sq. foot	Misc.
704-99.05 704-99.05M	1.0 0.1	sq. yard sq. meter	Misc.
704-99.07 704-99.07M	0.1	cu. yard cu. meter	Misc.
705-10.10 705-10.15	1.0 0.1	sq. foot sq. meter	Precast Prestressed Concrete Panels
705-10.30	1.0	lump sum	Post-Tension System
705-10.40	1.0	each	Shear Key (Post-Tension)
705-11.25 to 705-12.05 705-12.08 to 705-12.58	1.0	each	Prestressed Concrete I-Girder, xx ft Span *Note: 25 ft span thru 105 ft span.* Prestressed Concrete I-Girder xx.x m Span *Note: 7 m span thru 32 m span at 0.5 m increments..*
705-14.30 to 705-14.80 705-15.12 to 705-15.43	1.0	each	Prestressed Concrete Box Girder, xx ft Span *Note: 30 ft span thru 80 ft span.* Prestressed Concrete Box Girder xx.x m Span *Note: 9 m span thru 24.5 m span at 0.5 m increments..*
705-16.65 to 705-17.30 705-16.04 to 705-16.44	1.0	each	Prestressed Concrete Bulb Tee Girder (xx ft) *Note: 65 ft span thru 130 ft span.* Prestressed Concrete Bulb Tee Girder xx.x m Span *Note: 20 m span thru 40 m span at 0.5 m increments.*
705-18.25 to 705-18.80 705-19.25 to 703-19.59	1.0	each	Prestressed Concrete Voided Slab Beam, xx ft Span *Note: 25 ft span thru 80 ft span.* Prestressed Concrete Voided Slab Beam, xx.x m Span *Note: 7.5 m span thru 24.5 m span at 0.5 m increments.*
705-20.25 to 705-20.60 705-25.09 to 705-25.31	1.0	each	Prestressed Concrete Double Tee Girder, xx ft *Note: 25 ft span thru 60 ft span.* Prestressed Concrete Double Tee Girder xx.x m Span *Note: 7.5 m span thru 18.5 m span at 0.5 m increments.*
705-30.00 705-30.05	1.0 0.5	linear foot meter	Prestressed Precast Concrete I-Girder (Post-Tensioned) (54 in.) Prestressed Precast Concrete I-Girder (Post-Tensioned) (1372 mm)
705-40.00 705-40.05	1.0 0.5	linear foot meter	Precast Concrete I-Girder (Post-Tensioned) (54 in.) Precast Concrete I-Girder (Post-Tensioned) (1372 mm)

Item Number	Accuracy	Units	Item Description
	Indicates this item shall be used only as approved by Plans Review Section.		
705-99.01	1.0	lump sum	Misc.
705-99.02	1.0	each	Misc.
705-99.03 705-99.03M	1.0 0.5	linear foot meter	Misc.
705-99.04	1.0	sq. foot	Misc.
705-99.05 705-99.05M	1.0 0.1	sq. yard sq. meter	Misc.
706-10.00 706-10.05	10 5	pound kilogram	Reinforcing Steel
706-10.20 706-10.25	10 5	pound kilogram	Reinforcing Steel (Culverts-Bridge)
706-10.30 706-10.35	10 5	pound kilogram	Reinforcing Steel (Culverts)
706-10.40 706-10.45	10 5	pound kilogram	Reinforcing Steel (Retaining Wall)
706-10.60 706-10.65	10 5	pound kilogram	Reinforcing Steel (Bridges)
706-10.70	1.0	each	Mechanical Bar Splice
706-99.11 706-99.11M	10 5	pound kilogram	Misc.
707-10.00	1.0	lump sum	Conduit System on Structure
707-10.30	1.0	lump sum	Conduit System on Structure (Telephone)
707-10.40	1.0	lump sum	Cathodic Protection System
707-99.01	1.0	lump sum	Misc.
707-99.02	1.0	each	Misc.
710-10.00 710-10.05	10 5	pound kilogram	Reinforcing Steel (Epoxy Coated)
710-99.11 710-99.11M	10 5	pound kilogram	Misc.

Item Number	Accuracy	Units	Item Description
	Indicates this item shall be used only as approved by Plans Review Section.		
711-01.00	1	lump sum	Protective Coating – Concrete Bents and Piers (Urethane) *Note: Tar appearance*
711-02.00	1	lump sum	Protective Coating – Concrete Bents and Piers (Epoxy) *Note: Clear appearance*
711-03.00	1	lump sum	Concrete and Masonry Protection System
711-04.00	1	lump sum	Sacrificial Graffiti Protection System
711-05.00	1	lump sum	Temporary Coating – Concrete Bents and Piers (Weathering Steel)
711-10.00 711-10.50	1.0	sq. yard sq. meter	Waterproofing
711-10.01 711-10.51	1.0	sq. yard sq. meter	Waterproofing Membrane
711-99.01	1	lump sum	Misc.
711-99.04	1.0	sq. foot	Misc.
711-99.05 711-99.05M	1.0	sq. yard sq. meter	Misc.
712-09.00 712-09.05A	1.0 0.5	linear foot meter	Expansion Device (Finger Plate)
712-09.15 712-09.20A	1.0 0.5	linear foot meter	Expansion Device (Flat Plate)
712-10.00 712-10.05	10 5	pound kilogram	Fabricated Structural Carbon Steel (Misc.)
712-10.10 712-10.15	10 5	pound kilogram	Fabricated Structural Carbon Steel (I-Beam)
712-10.20 712-10.25	10 5	pound kilogram	Fabricated Structural Carbon Steel (Plate Girder)
712-10.30 712-10.35	10 5	pound kilogram	Fabricated Structural Carbon Steel (Trusses)
712-10.40 712-10.45	10 5	pound kilogram	Fabricated Structural Carbon Steel (Concrete)
712-10.50 712-10.55	10 5	pound kilogram	Fabricated Structural Carbon Steel (Box Girder)
712-10.60	1.0	lump sum	Fabricated Sign Support Brackets
712-11.00 712-11.05	10 5	pound kilogram	Fabricated Structural Low Alloy Steel (Misc.)
712-11.11 712-11.12	10 5	pound kilogram	Fabricated Structural Low Alloy Steel (I-Beam) A709, Grade 50 Fabricated Structural Low Alloy Steel (I-Beam) A-709M, Grade 345

Item Number	Accuracy	Units	Item Description
	Indicates this item shall be used only as approved by Plans Review Section.		
712-11.13 712-11.15	10 5	pound kilogram	Fabricated Structural Low Alloy Steel (I-Beam) A709, Grade 50W Fabricated Structural Low Alloy Steel (I-Beam) A709M, Grade 345W
712-11.21 712-11.20	10 5	pound kilogram	Fabricated Structural Low Alloy Steel (Plate Girder) A709, Grade 50 Fabricated Structural Low Alloy Steel (Plate Girder) A709M, Grade 345
712-11.22 712-11.25	10 5	pound kilogram	Fabricated Structural Low Alloy Steel (Plate Girder) A709, Grade 50W Fabricated Structural Low Alloy Steel (Plate Girder) A709M, Grade 345W
712-11.23 712-11.26	10 5	pound kilogram	Fabricated Structural Low Alloy Steel (Plate Girder) A709 Grade HPS70W Fabricated Structural Low Alloy Steel (Plate Girder) A709M Grade HPS485W
712-11.24 712-11.27	10 5	pound kilogram	Fabricated Structural Low Alloy Steel (Plate Girder) A709 Grade HPS50W Fabricated Structural Low Alloy Steel (Plate Girder) A709M Grade HPS345W
712-11.30 712-11.35	10 5	pound kilogram	Fabricated Structural Low Alloy Steel (Trusses)
712-11.40 712-11.45	10 5	pound kilogram	Fabricated Structural Low Alloy Steel (Concrete)
712-11.51 712-11.50	10 5	pound kilogram	Fabricated Structural Low Alloy Steel (Box Girder) A709, Grade 50 Fabricated Structural Low Alloy Steel (Box Girder) A709M, Grade 345
712-11.52 712-11.55	10 5	pound kilogram	Fabricated Structural Low Alloy Steel (Box Girder) A709, Grade 50W Fabricated Structural Low Alloy Steel (Box Girder) A709M, Grade 345W
712-11.60 712-11.65	1.0 0.1	sq. foot sq. meter	Steel Grid Floor (Half Concrete Filled)
712-11.61 712-11.66	1.0 0.1	sq. foot sq. meter	Steel Grid Floor (Concrete Filled)
712-12.50	1.0	lump sum	Strengthening Existing Stringers
712-13.00 712-13.05	10 5	pound kilogram	Fabricated Structural Steel Bearings

Item Number	Accuracy	Units	Item Description
	Indicates this item shall be used only as approved by Plans Review Section.		
712-20.00 712-20.05	10 5	pound kilogram	Carbon Steel Castings
712-22.00 712-22.05	10 5	pound kilogram	Gray Iron Castings
712-23.00 712-23.05	1.0 0.5	linear foot meter	Bridge Rail (Two Tube Structural Steel)
712-30.00	1.0	each	Steel Bar Dam
712-31.00	1.0	each	Cleaning and Coating Existing Bearings
712-31.10	1.0	each	Bearing Removal for Inspection
712-31.15	1.0	each	Surface Finishing Bearing Rocker
712-31.20	1.0	each	Cleaning, Lubricating and Coating Bearing
712-31.30	1.0	each	Rehabilitate Bearing
712-31.40 712-31.45	10 5	pound kilogram	New Bearing Materials
712-31.50	1.0	each	Anchor Bolt Replacement
712-32.00	1.0	each	Removing, Coating and Reinstalling Light Standards (Bridges)
712-32.10	1.0	each	Earthquake Restrainer Assemblies
712-33.00	1.0	lump sum	Existing Diaphragm Connections to Flange
712-33.01	1.0	each	Steel Intermediate Diaphragm for P/S Concrete Girders
712-35.00 712-35.05A	1.0 0.5	linear foot meter	Railing for Steps
712-36.10	1.0	each	Slab Drain
712-36.11	1.0	each	Slab Drain with Grate
712-36.20	1.0	lump sum	Drainage System (On Structure)
712-40.00 712-40.10	0.10	tons megagram	Painting
712-50.00 712-50.05	0.10	tons megagram	Painting (2 Coats)
712-50.15	1.0	lump sum	Painting (Existing and New Steel)
712-50.30	1.0	lump sum	Repainting Existing Steel
712-51.00	1.0	lump sum	Surface Preparation for Recoating Structural Steel
712-51.10	1.0	lump sum	Field Application of Inorganic Zinc Primer
712-52.00 712-57.00	100.0 10.0	sq. foot sq. meter	Surface Preparation for Recoating Structural Steel

Item Number	Accuracy	Units	Item Description
	Indicates this item shall be used only as approved by Plans Review Section.		
712-52.10 712-57.10	100.00 10.0	sq. foot sq. meter	Field Application of Inorganic Zinc Primer
712-53.10 712-57.15A	0.10	tons megagram	Field Coat (System G) Gray
712-53.15 712-57.20A	0.10	tons megagram	Intermediate Field Coat (System G) Gray
712-53.20 712-57.25A	0.10	tons megagram	Finish Field Coat (System G) Gray
712-53.25 712-57.30A	0.10	tons megagram	Intermediate Field Coat (System G) Brown
712-53.30 712-57.35	0.10	tons megagram	Finish Field Coat (System G) Brown
712-53.35 712-57.40A	0.10	tons megagram	Intermediate Field Coat (System H) Gray
712-53.40 712-57.45A	0.10	tons megagram	Finish Field Coat (System H) Gray
712-53.45 712-57.50A	0.10	tons megagram	Intermediate Field Coat (System H) Brown
712-53.55 712-57.55A	0.10	tons megagram	Finish Field Coat (System H) Brown
712-53.60 712-57.60A	0.10	tons megagram	Field Coat (System H) Gray
712-53.65 712-57.85	100.0 10.0	sq. foot sq. meter	Intermediate Field Coat (System G) Gray
712-53.70 712-57.95	100.0 10.0	sq. foot sq. meter	Finish Field Coat (System G) Gray
712-53.75 712-58.05	100.0 10.0	sq. foot sq. meter	Intermediate Field Coat (System G) Brown
712-53.80 712-58.15	100.0 10.0	sq. foot sq. meter	Finish Field Coat (System G) Brown
712-53.85 712-58.25	100.0 10.0	sq. foot sq. meter	Intermediate Field Coat (System H) Gray
712-53.90 712-58.35	100.0 10.0	sq. foot sq. meter	Finish Field Coat (System H) Gray
712-53.95 712-58.45	100.0 10.0	sq. foot sq. meter	Intermediate Field Coat (System H) Brown
712-54.05 712-58.55	100.0 10.0	sq. foot sq. meter	Finish Field Coat (System H) Brown
712-54.10 712-58.60	100.0 10.0	sq. foot sq. meter	Field Coat (System G) Gray
712-54.60 712-58.65	100.0 10.0	sq. foot sq. meter	Field Coat (System H) Gray

Item Number	Accuracy	Units	Item Description
	Indicates this item shall be used only as approved by Plans Review Section.		
712-60.00 712-60.05	1.0 0.5	linear foot meter	Non-Destructive Testing
712-99.01	1.0	lump sum	Misc.
712-99.02	1.0	each	Misc.
712-99.03 712-99.03M	1.0 0.5	linear foot meter	Misc.
712-99.04	1.0	sq. foot	Misc.
712-99.05 712-99.05M	1.0 0.1	sq. yard sq. meter	Misc.
712-99.10 712-99.10M	0.1	tons megagram	Misc.
712-99.11 712-99.11M	10 5	pound kilogram	Misc.
713-30.00 713-30.05	1.0 0.5	linear foot meter	Bridge Guard Rail (W-Beam)
713-40.00 713-40.05	1.0 0.5	linear foot meter	Bridge Guard Rail (Thrie Beam)
713-99.03A 713-99.03M	1.0 0.5	linear foot meter	Misc.
715-10.01	1.0	each	Vertical Drain at End Bents
716-10.00	1.0	each	Plain Neoprene Bearing Pad
716-10.01 716-10.51	1.0 0.5	linear foot meter	Plain Neoprene Bearing Pad
716-10.02	1.0	each	Laminated Neoprene Bearing Pad
716-10.03	1.0	each	Laminated Neoprene Bearing Pad (Tapered)
716-20.00	1.0	each	Laminated Neoprene Bearing Pad Assembly
716-30.00	1.0	each	Type N PTFE Bearing
716-40.00	1.0	each	POT Bearing
716-99.01	1.0	lump sum	Misc.
716-99.02	1.0	each	Misc.
716-99.03 716-99.03M	1.0 0.5	linear foot meter	Misc.

Item Number	Accuracy	Units	Item Description
	Indicates this item shall be used only as approved by Plans Review Section.		
717-00.01 717-00.51	1.0 0.5	linear foot meter	Alternate Expansion Joint System
717-10.01 717-10.51	1.0 0.5	linear foot meter	Preformed Compression Seal Expansion Joint System
717-10.02 717-10.52	1.0 0.5	linear foot meter	Preformed Compression Seal *Note: Use for seal only, no armor.*
717-20.01 717-20.51	1.0 0.5	linear foot meter	Strip Seal Expansion Joint System
717-20.02 717-20.52	1.0 0.5	linear foot meter	Strip Seal *Note: Use for seal only, no armor.*
717-30.01 717-30.51	1.0 0.5	linear foot meter	Silicone Expansion Joint Sealant System
717-30.02 717-30.52	1.0 0.5	linear foot meter	Silicone Expansion Joint Sealant *Note: Use for silicone sealant only, no armor.*
717-99.03 717-99.03M	1.0 0.5	linear foot meter	Misc.
718-10.10	1.0	lump sum	Furnishing Superstructure
718-10.11	1.0	lump sum	Partial Furnishing of Superstructure
718-10.20	1.0	lump sum	Transporting and Erecting Superstructure
718-10.30	1.0	lump sum	Removing and Storing Superstructure
718-99.01	1.0	lump sum	Misc.
718-99.02	1.0	Each	Misc.
720-10.00 720-10.50	1.0 0.1	sq. foot sq. meter	Mechanically Stabilized Earth Wall Systems
720-99.04	1.0	sq. foot	Misc.
720-99.05 720-99.05M	1.0 0.1	sq. yard sq. meter	Misc.
725-10.00	1.0	each	Corrugated Metal Pipe Pile Spacers
901-93.00	1.0	lump sum	Navigation Lighting System
901-93.01	1.0	lump sum	Bridge Lighting

2.5.2 Computation of Estimated Quantities

General

All estimated quantities shall be carried to the degree of accuracy specified in the Index of Estimated Quantities. All quantities shall be listed on the plans in the order and worded exactly as shown in the Index of Estimated Quantities.

Two sets of quantity computations shall be independently performed and then agreed upon by the individuals performing the computations. Both sets of computations shall be bound together and submitted with the design plans.

In order to satisfy funding requirements on projects that add capacity to the Interstate System, the quantities that are attributed to the addition of capacity shall be reported separately from the remaining quantities in the submitted computations. Quantities shall not be shown separately on the bridge plans.

Weight of Bolts

Refer to AISC Manual of Steel Construction or ASTM A325 for weight and dimensions of high strength bolts and washers. When calculating the weight of high strength bolts in structural connections, the following simplified weights may be used. These values include the weight of a regular hex head, one heavy hex nut, one washer, and the portion of the bolt projecting beyond the grip (washer thickness + nut thickness + 1/4“).

Bolt Size Diameter (inch)	Weight per 100 Bolts (pounds)
5/8	40
3/4	65
7/8	95
1	135
1-1/8	180
1-1/4	245
1-3/8	352
1-1/2	400

Table 2.5.2-1 Weight of High Strength Bolts

Piles

Estimated quantities for piles, steel or concrete, shall be compiled as the entire length of the piles used including the length of pile embedded in the pile cap or footing measured to the nearest foot for each pile.

Pre-bore for Piling

Pre-bore is required when fill exceeds five feet as described in Sec 702 or when specified on the Design Layout. Pre-bore is also required through earth plugs. Pre-bore is computed as the length of pile measured from the bottom of the pile cap or footing to the natural ground line or as directed on the Design Layout rounded to the nearest foot for each hole.

Drilled Shafts

Drilled shafts, rock sockets and reinforcing steel quantity will be measured in accordance with Sec 701. Supplementary television camera inspection quantity will be calculated one for each drilled shaft. Foundation inspection holes quantity will be from the top of rock socket to 10 feet below the below the anticipated bottom of rock socket for each rock socket. Concrete coring quantity will be calculated for 1/2 of the drilled shafts for each bent through the drilled shaft and rock socket plus one foot below the bottom of the rock socket. Sonic logging testing shall be performed on all drilled shafts and rock sockets. Drilled shafts for high mast lighting will not require sonic logging testing and concrete coring.

Concrete

The volume of concrete shall be calculated to the nearest 0.1 cubic yard. Do not deduct for volume of concrete displaced by reinforcing steel or piling.

Polymer Concrete

The volume of polymer concrete shall be calculated to the nearest 1.0 cubic foot. Do not deduct for volume of concrete displaced by reinforcing steel.

Non-Destructive Testing

The length of weld requiring non-destructive testing shall include 6” of weld along each edge of the cover plate and the 1” returns along the end of the cover plate at each corner. On tapered ends, test weld along the end of cover plate, along tapered edges and 6” back along cover plate from end of taper.

Temporary Shoring

When temporary shoring is required, it shall be reported as a lump sum item on the bridge plans. In addition, the estimated area of temporary shoring shall be computed to the nearest square foot and recorded only in the quantity folder. Embedment of temporary shoring shall be taken as one third of the exposed height of the shoring for the purpose of estimating the shoring area.

MSE Retaining Walls

Quantities for Mechanically Stabilized Earth Wall Systems are to be calculated based on the vertical face of the wall system as shown on the plans. The payment for furnishing and fabricating the concrete facing elements, excavation and installing the leveling pad, furnishing and installing the soil reinforcement, furnishing and placing select granular backfill for structural systems, furnishing other incidentals related to the wall system, and erecting the wall system complete-in-place, will be considered completely covered by the contract unit price for Mechanically Stabilized Earth Wall Systems per square foot. The use of the Select Granular Backfill for Structural Systems pay item will not required.

Structural Steel Protective Coatings (Non-Weathering Steel)

The protective coating, as specified on the Design Layout, shall be System G or H with the color being gray or brown. The coating color shall be specified on the Design Layout. The following gives pay item guidelines for most bridges.

New Multi-Girder/Stringer Bridges

Intermediate Field Coat and Finish Field Coat (System G & H) (Gray or Brown) - The quantity shall be computed to the nearest one hundred square foot of structural steel to be field coated.

1. **Bridges over Roadways** (does not include over Railroads)

   The intermediate field coat for beam and girder spans shall be applied to the surfaces of all structural steel except those surfaces to be in contact with concrete shall not receive the intermediate coat. The intermediate coat shall also be applied to the bearings, except where bearings will be encased in concrete.

   The finish field coat for beam and girder spans shall include the facia girders or beams. The limits of the facia girders or beams shall include the bottom of the top exterior flanges, the top of the bottom exterior flanges, the exterior web area, the exterior face of the top and bottom flanges, and the bottom of the bottom flange. Areas of steel to be in contact with concrete shall not receive the finish coat. The finish coat shall also be applied to the exterior bearings, except where bearings will be encased in concrete.

The surfaces of all structural steel located under expansion joints of beam and girder spans shall be field coated with intermediate and finish coats for a distance of **1-1/2** times the girder depth, but not less than **10** feet from the center line of the joint. Within this limit, the items to be field coated shall include all surfaces of beams, girders, bearings, diaphragms, stiffeners and miscellaneous structural steel items. Areas of steel to be in contact with concrete shall not receive the field coats. The limits of the field coatings shall be masked to provide crisp, straight lines and to prevent overspray on adjacent areas.

2. Bridges over Streams and Bridges over Railroads

The field coating (including intermediate and finish coats) for beam and girder spans shall include the facia girders or beams. The limits of the facia girders or beams shall include the bottom of the top exterior flanges, the top of the bottom exterior flanges, the exterior web area, the exterior face of the top and bottom flanges, and the bottom of the bottom flange. Areas of steel to be in contact with concrete shall not receive the field coats. The field coating shall also be applied to the exterior bearings, except where bearings will be encased in concrete. The interior beams or girders shall only have the prime coat applied with no other field coating required.

The surfaces of all structural steel located under expansion joints of beam and girder spans shall be field coated with intermediate and finish coats for a distance of **1-1/2** times the girder depth, but not less than **10** feet from the center line of the joint. Within the limit, the items to be field coated shall include all surfaces of beams, girders, bearings, diaphragms, stiffeners and miscellaneous structural steel items. Areas of steel to be in contact with concrete shall not receive the field coats. The limits of the field coatings shall be masked to provide crisp, straight lines and to prevent overspray on adjacent areas.

New Truss Bridges or Other Unusual Structures

Intermediate Field Coat and Finish Field Coat (System G or H) (Gray or brown) - The quantity shall be computed to the nearest **0.1** ton of plan quantity of structural steel.

All structural steel for truss or steel box girder spans shall be field coated with intermediate and finish coats, except the area of steel to be in contact with concrete.

Existing Multi-Girder/Stringer Bridges

1. Surface Preparation for Recoating Structural Steel - The quantity shall be computed to the nearest one hundred square foot of structural steel to be prepared. The area computations do not include diaphragms, stiffeners and all other misc. steel within the limits of preparation. If the deck is removed, the top of the top flange shall be included in the area computations.

2. Field Application of Inorganic Zinc Primer - The quantity shall be computed with the same requirements of Surface Preparation for Recoating Structural Steel.
3. Intermediate Field Coat (System G or H) (Gray or Brown) - The quantity shall be computed with the same requirements of a new multi-girder bridge.
4. Finish Field Coat (System G or H) (Gray or Brown) - The quantity shall be computed with the same requirements of a new multi-girder bridge.

Existing Truss Bridges or other Unusual Structures

1. Surface Preparation for Recoating Structural Steel - The quantity shall be computed as a **lump sum** quantity. The approximate weight of steel shall be shown to the nearest ton on the plan sheet.
2. Field Application of Inorganic Zinc Primer – The quantity shall be computed as a **lump sum** quantity. The approximate weight of steel shall be shown to the nearest ton on the plan sheet.
3. Intermediate Field Coat (System G or H) (Gray or Brown) – The quantity shall be computed with the same requirements as a new truss bridge.
4. Finish Field Coat (System G or H) (Gray or Brown) – The quantity shall be computed with the same requirements as a new truss bridge.

Structural Steel Protective Coatings (Weathering Steel)

There will not be a quantity item for coating weathering steel. The cost of coating weathering steel structures will be considered completely covered by the contract unit price for the Fabricated Structural Steel.

Protective Coatings for Concrete

When the use of a protective coating for concrete is required, it shall be reported as a lump sum item on the bridge plans. In addition, the estimated area to be coated shall be computed to the nearest square foot and recorded only in the quantity folder. The following guidelines shall apply to the calculations for these items.

Protective Coating - Concrete Bents and Piers (Urethane) or (Epoxy)

See *Expansion Devices Section* for details.

Protective Coating - Concrete Bents and Piers (Weathering Steel)

Concrete Abutments - Coat all surfaces above the ground line.

Concrete Intermediate Bents & Piers - Coat all surfaces above the ground line or above the low water elevation, whichever is the higher at that bent or pier.

Concrete and Masonry Protection System

Coat all surfaces above ground line of the concrete as specified on the Design Layout.

Sacrificial Graffiti Protection System

Coat all surfaces above ground line of the concrete as specified on the Design Layout.

Asphaltic Concrete Pavement

Seal coat or tack coat is required with the asphaltic concrete pavement. Unit weights will not be calculated.

Seal Coat

A seal coat shall be used when specified on the Design Layout. Unit weights will not be calculated.

Tack Coat

A tack coat shall be used when specified on the Design Layout. The following unit weights will be used to calculate the estimated quantity reported on the bridge plans.

Tack Coat = 0.05 gal/sq. yd.

Excavation

Excavation shall be computed in accordance with Sec 206 and the limits shown in this section.

The **Roadway and Drainage Excavation Line** is the finish grade line after the bridge is completed in place. This may or may not correspond to the preliminary embankment line placed before the bridge is built.

The **Excavation Datum** is located at one foot above Low Water Elevation of the stream bed (round up to the next one foot). Use the low point of the streambed cross-section as Low Water Elevation, if a Low Water Elevation can not be found. Everything above this datum is Class 1 Excavation while everything below it is Class 2 Excavation.

Excavation Limit Rules

Soil or other sub-strata shall be excavated to the limits of:

- 18" around the perimeter at the bottom of footings, and vertically (*) to the finished Roadway and Drainage Excavation Line
- 18" for tapered wings only and around the wings on end bents
- No excavation below sidewalls or wings of a semi-deep abutment
- The perimeter of seal courses
- No excavation shall be figured for piles or bracing
- If there is less than 10 cubic yards of total excavation, no excavation item needs to be listed in the Estimated Quantities. See note B1.10 in the *Office Notes* section.

Classes of Excavation (**)

Class 1, Class 2 Excavations shall be computed in accordance with Sec 206 and the limits shown in Figure 2.5.2-1 to Figure 2.5.2-8. Excavation for structures below *Excavation Datum Elevation* will be paid for as ***Class 2 Excavation.*** Excavation for structures above *Excavation Datum Elevation* will be paid for as ***Class 1 Excavation.*** Use a minimum of 10 cubic yards of Class 1 Excavation when there is Class 2.

Class 4 Excavation shall be used for culverts. Class 4 Excavation shall be computed in accordance with Sec 206 and the limits shown in Figure 2.5.2-9. Culvert concrete removal for extensions will be paid for as Partial Removal of Culvert-Bridge Concrete. See the Design Layout for special cases.

Cases of Excavation

Case 1 is when the ground line survey is a higher elevation than the roadway and drainage excavation line.

Case 2 is when the ground line survey is a lower elevation than the roadway and drainage excavation line.

(*) Soil shall be excavated vertically from the bottom of the footing for footing on pile, 6" above the bottom of the footing for footing on rock and 18" above the bottom of the footing for footing on shale.

(**) Use Excavation in Rock if it is anticipated to be more than 10 cu. yard. The designer should check with the Structural Project Manager before calculating the quantity of Excavation in Rock. See Bridge Manual Sec 2.5.1.

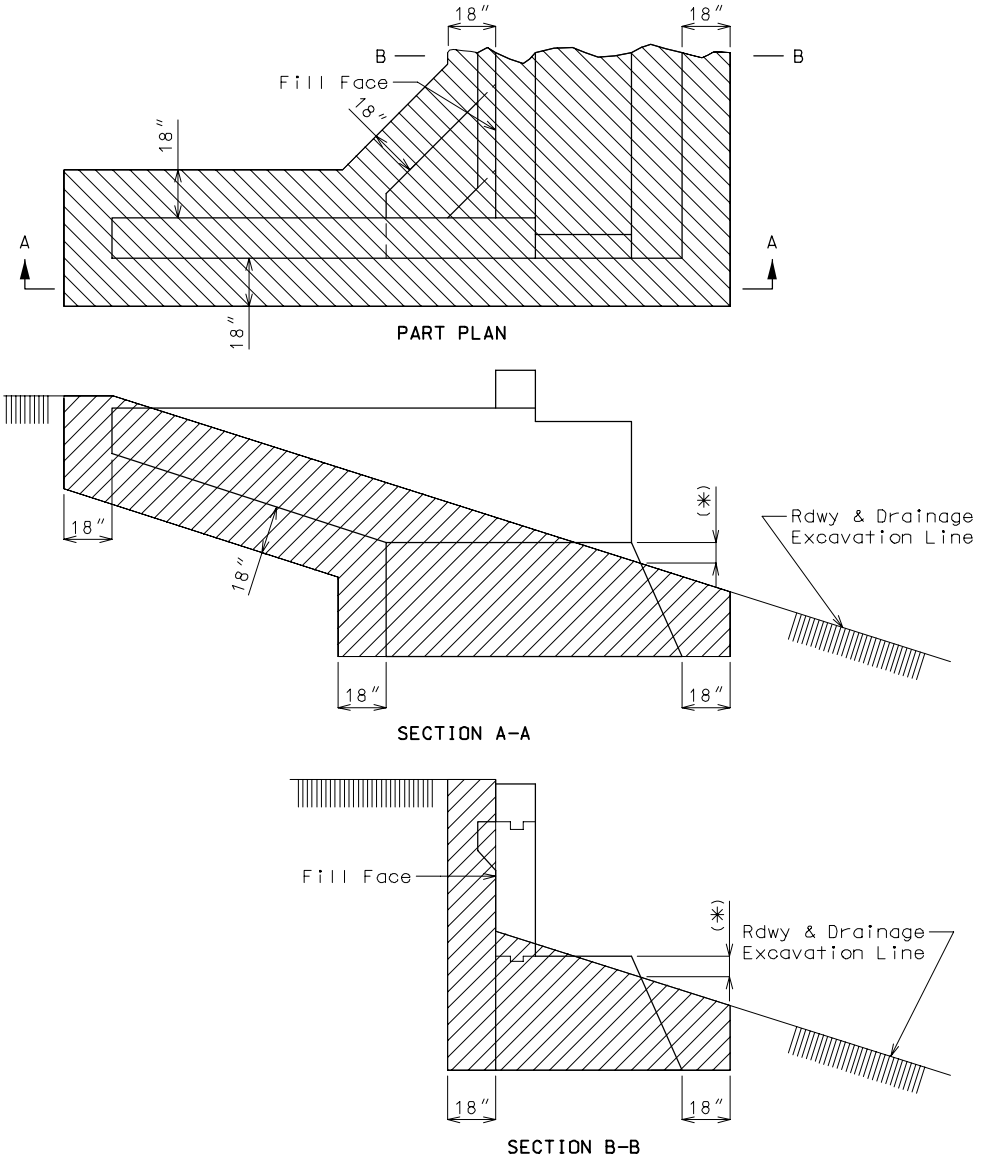

✳ 12″ at lowest beam depth for Girder Bridges and 24″ for Concrete Slab Bridges.

Figure 2.5.2-1 Non-Integral End Bent Excavation Limits (Case 1 ✳✳)

✳✳ Case 1 is when the ground line survey is a higher elevation than the roadway and drainage excavation line.

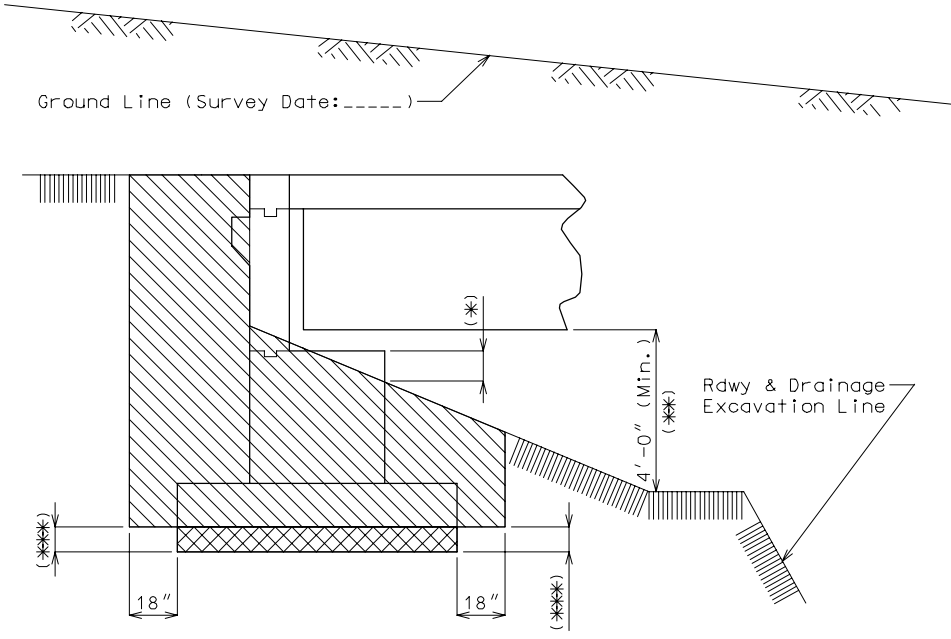

* 12" at lowest beam depth for girder bridges and 24" for concrete slab bridges.
** Specify berm elevation or 4'-0" minimum clearance.
*** 6" for footing on rock, 18" for footing on shale.

When calculating rock excavations allow 18" around and 6" underneath wing. Use the following note on plans:

Note: Bottom of wings at End Bents No.___ and ___ shall not be cast on rock.

Figure 2.5.2-2 Stub Bent Excavation Limits (Case 1 **)**

**** Case 1 is when the ground line survey is a higher elevation than the roadway and drainage excavation line.

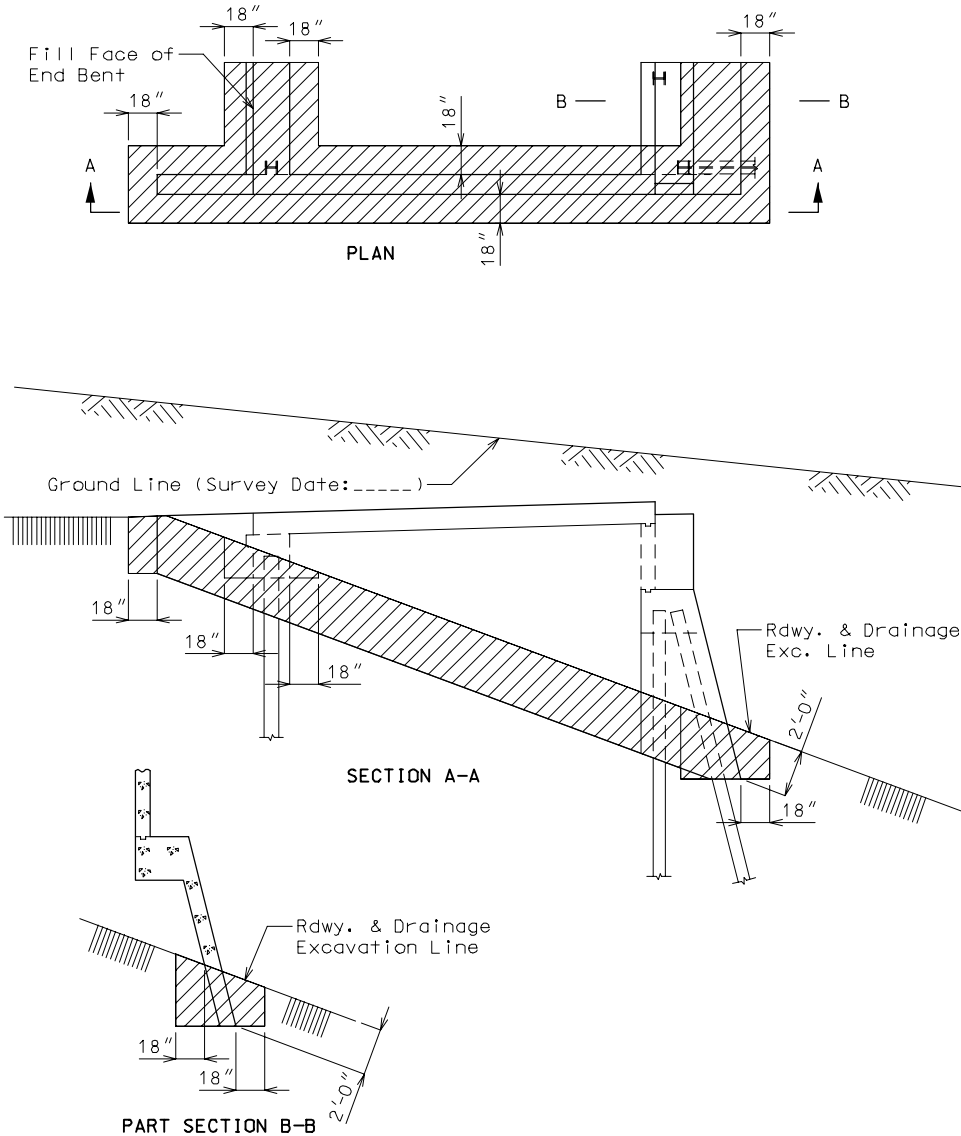

Figure 2.5.2-3 Semi-Deep Abutment Excavation Limits (Case 1 ✳)

✳ Case 1 is when the ground line survey is a higher elevation than the roadway and drainage excavation line.

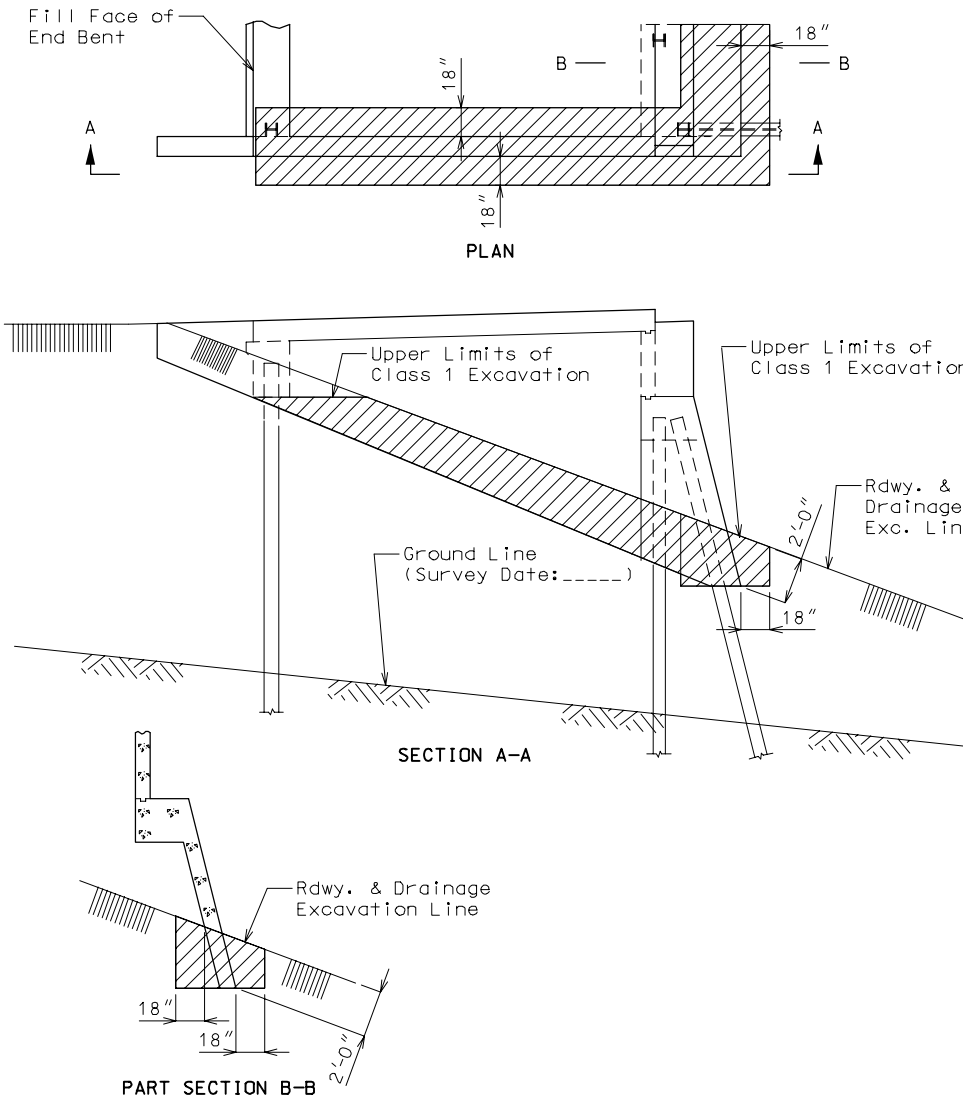

Figure 2.5.2-4 Semi-Deep Abutment Excavation Limits (Case 2 ✳)

✳ Case 2 is when the ground line survey is a lower elevation than the roadway and drainage excavation line.

Class 1 Excavation (Do not show on plans)

Class 1 Excavation (Do not show on plans)
When compacted fill is required before driving pile for End Bents.

(✳) 12″ at lowest beam depth for Girder Bridges and 24″ for Concrete Slab Bridges.

(✳✳) 0″ for footing on Pile, 6″ for footing on Rock, 18″ for footing on Shale.

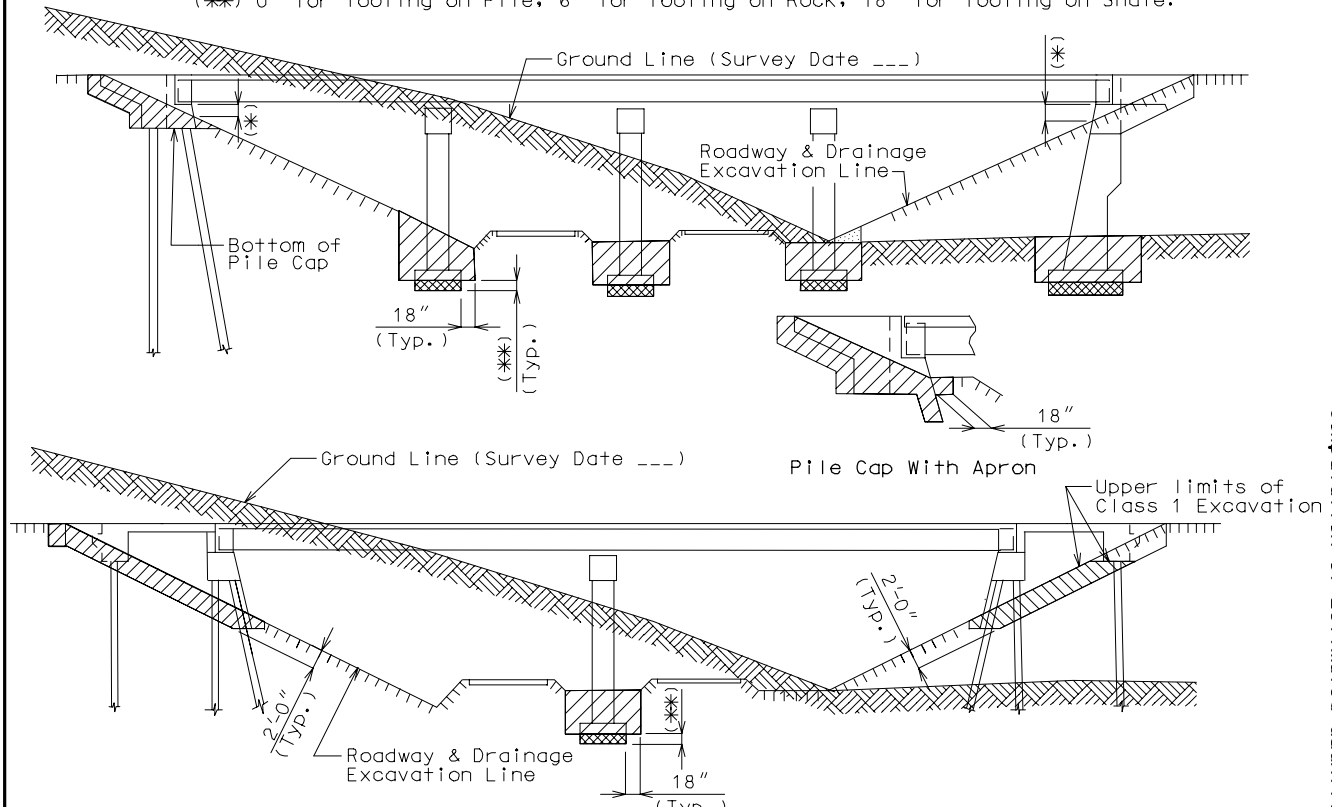

Figure 2.5.2 - 5 Excavation Limits: All Grade Separations

Class 1 Excavation (Do not show on plans)
Excavation for structures above Excavation Datum Elevation will be paid for as Class 1.

Class 2 Excavation (Do not show on plans).
Excavation for structures below Excavation Datum Elevation will be paid for as Class 2.

Use a minimum of 10 cubic yards of Class 1 Excavation when there is Class 2.

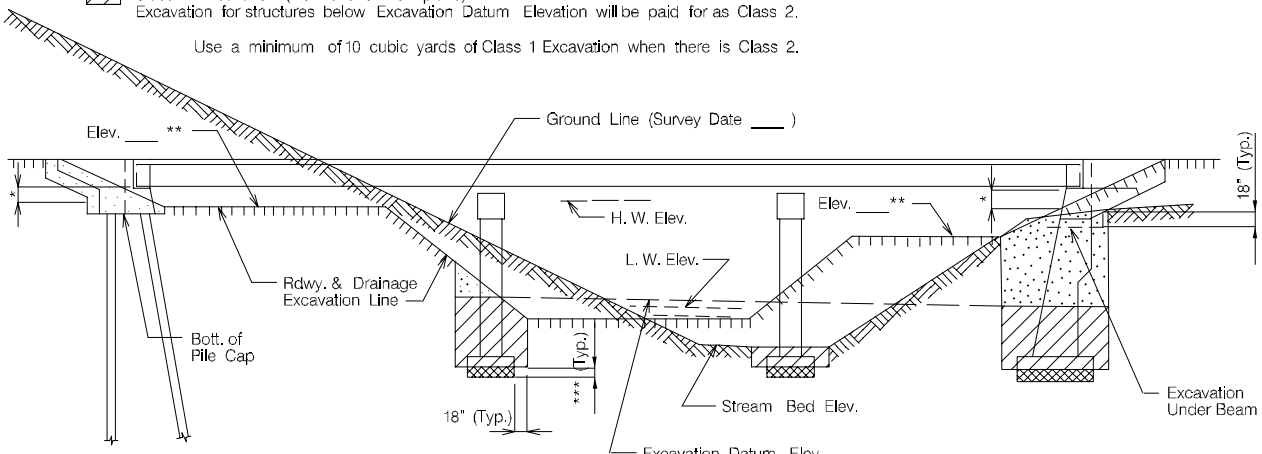

* 12" at lowest beam depth for Girder Bridges and 24" for Concrete Slab Bridges.

** BERM: Give the Elevation specified on DESIGN LAYOUT. If the berm elevation is not specified, show 4'-0" MINIMUM from bottom of superstructure to finished ground line

*** 0" for footing on Pile, 6" for footing on Rock, 18" for footing on Shale.

EXCAVATION DATUM: (Design Layout)

(1) Indicate Low Water Elevation as given on Bridge Survey Report.

(2) Indicate Stream Bed Elevation (Low point of stream bed).

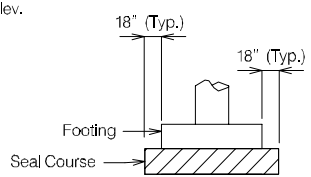

Seal Course
Excavation Limits

Figure 2.5.2 - 6 Excavation Limits: Stream Crossings (Typical)

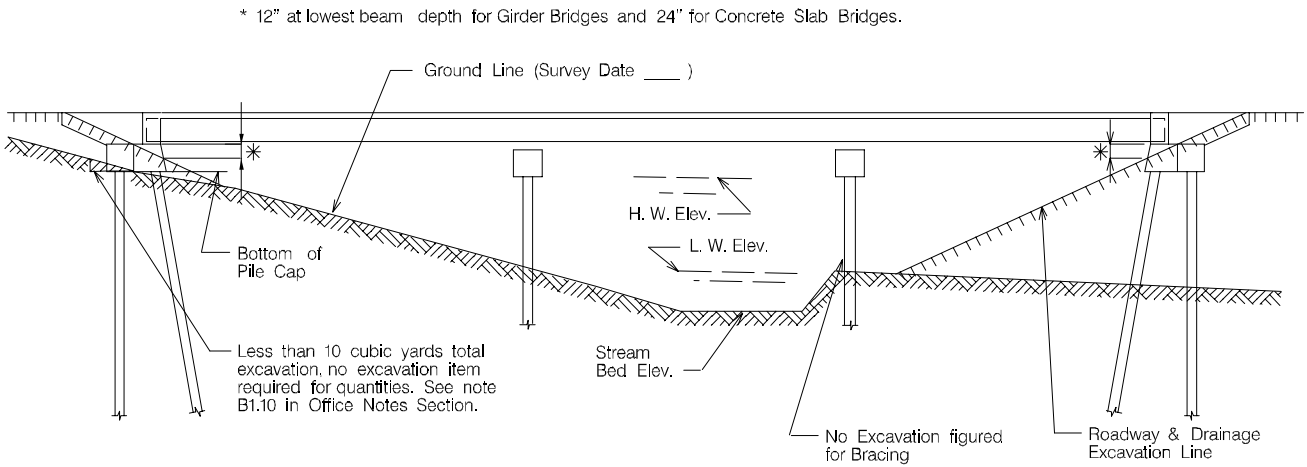

Figure 2.5.2-7 Excavation Limits: Stream Crossing
(No Excavation Item)

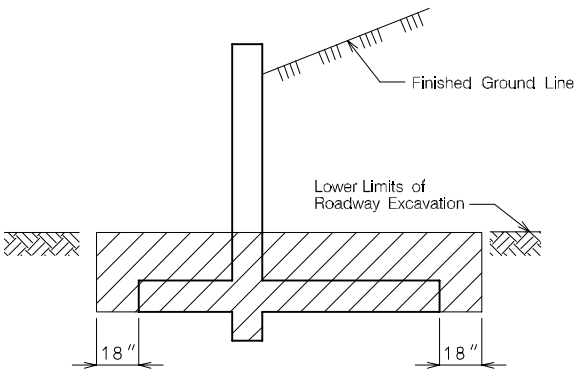

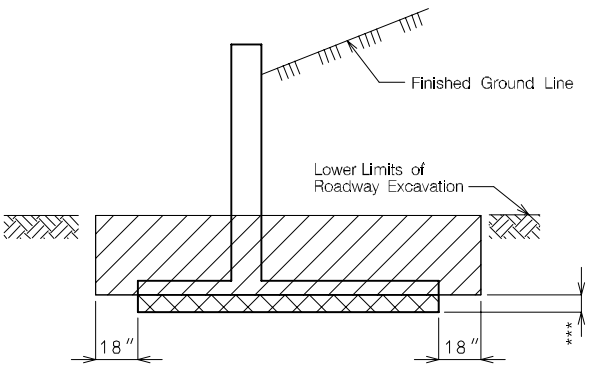

*** 0" for Footings on Pile
6" for Footings on Rock
18" for Footings on Shale

Note: Excavation to be included in Estimated Quantity Table (Class 1 or Class 3 Excavation shall be culculated to the nearest 5 cubic yards).

Final limits of the roadway and bridge excavation to be coordinated with the bridge plans prior to estimating.

See Manual Section 4 for the appropriate notes.

Figure 2.5.2–8 Excavation Limits: Retaining Walls

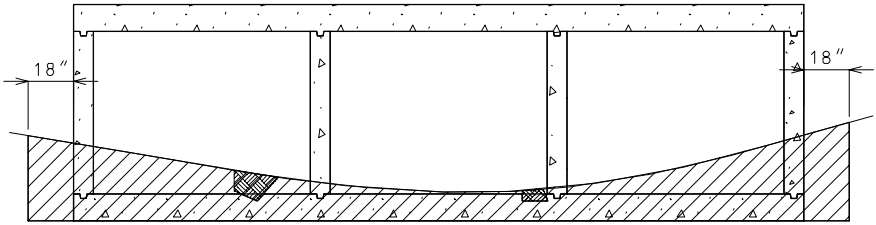

Excavation to be included in Estimated Quantity Table (Class 4 Excavation shall be carried to the nearest 5 cubic yards). Final limits of the roadway and bridge excavation to be coordinated with the bridge plans prior to estimating.

Excavation of 18″ adjacent to the removal of culvert ends for purpose of extending the culvert will not be considered excavation and is considered part of removal. (Refer to Sec 206)

See Manual Section 4.0 for the appropriate notes.

Figure 2.5.2-9 Excavation Limits: Culverts