# MEDIUM DUTY PAVEMENT
# TWO-WAY TRAFFIC

## RIGID

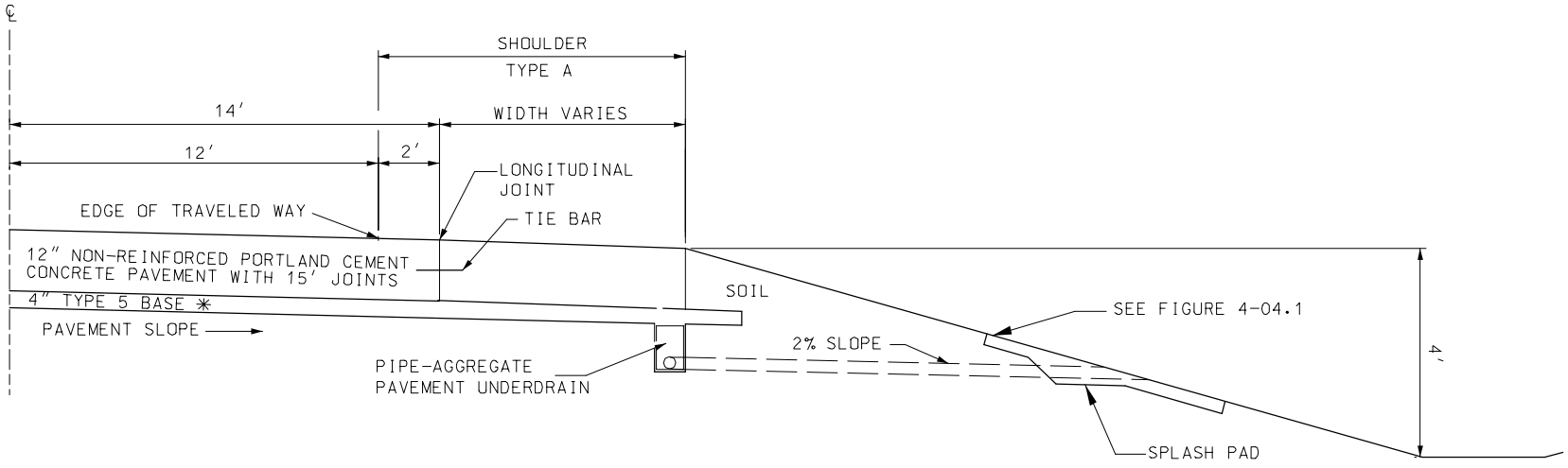


## FLEXIBLE

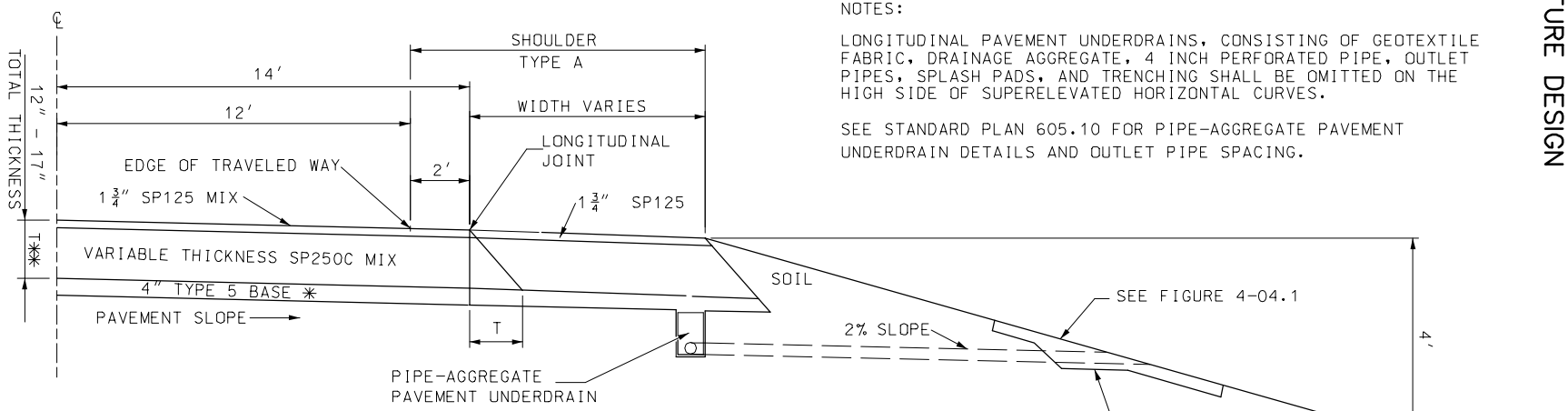


NOTES:

LONGITUDINAL PAVEMENT UNDERDRAINS, CONSISTING OF GEOTEXTILE FABRIC, DRAINAGE AGGREGATE, 4 INCH PERFORATED PIPE, OUTLET PIPES, SPLASH PADS, AND TRENCHING SHALL BE OMITTED ON THE HIGH SIDE OF SUPERELEVATED HORIZONTAL CURVES.

SEE STANDARD PLAN 605.10 FOR PIPE-AGGREGATE PAVEMENT UNDERDRAIN DETAILS AND OUTLET PIPE SPACING.

✳ ALTERNATE 18″ ROCK BASE AS AVAILABLE ON JOB. 4′ DITCH DEPTH REQUIRED. SEE FIGURES 6-03.9 AND 6-03.10.

✳✳ TOP 4¾″ PG XX-XX (SEE TABLE 6-07.1). REMAINING THICKNESS PG 64-22.

Medium Duty Rigid and Flexible Pavement and Shoulder Details for Two-way Traffic

# MEDIUM DUTY PAVEMENT
# TWO-WAY TRAFFIC

## RIGID

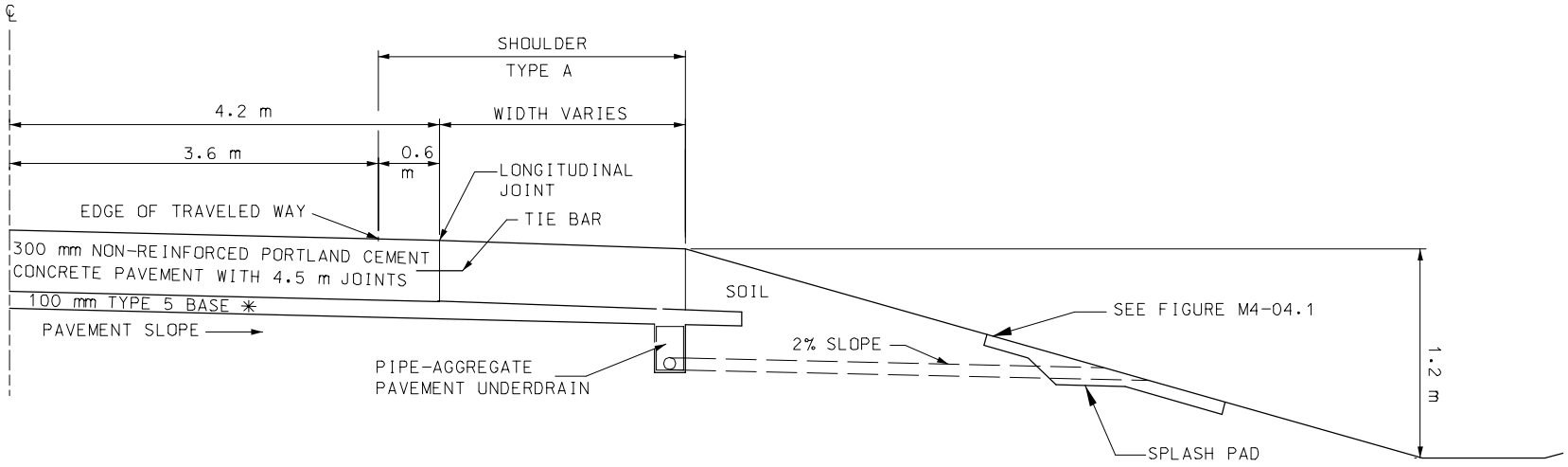


## FLEXIBLE

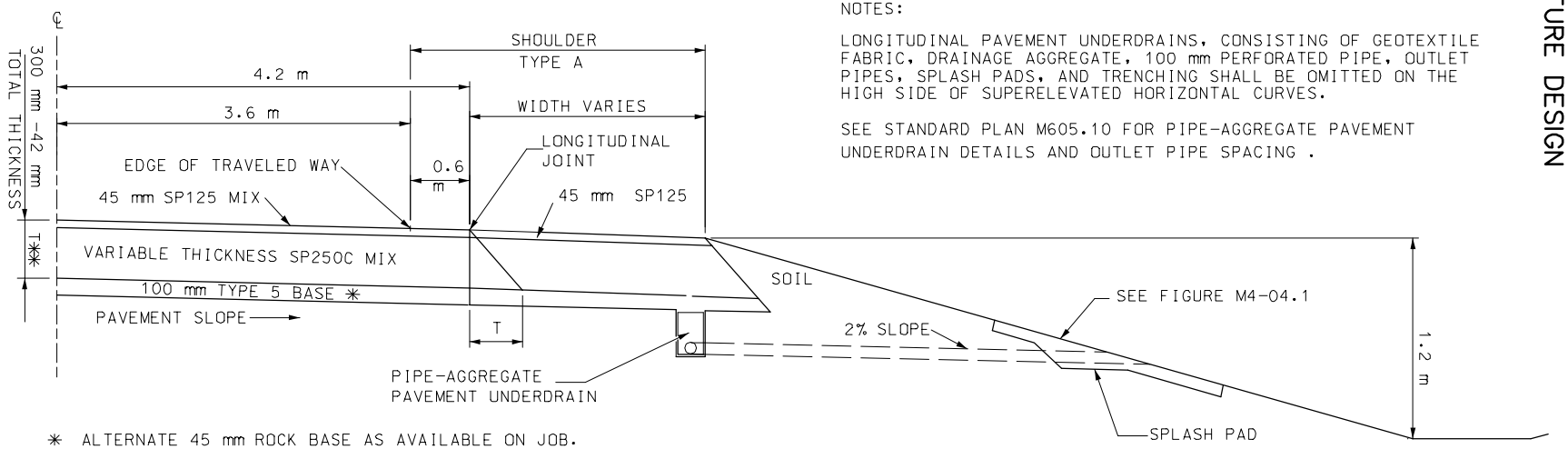


NOTES:

LONGITUDINAL PAVEMENT UNDERDRAINS, CONSISTING OF GEOTEXTILE FABRIC, DRAINAGE AGGREGATE, 100 mm PERFORATED PIPE, OUTLET PIPES, SPLASH PADS, AND TRENCHING SHALL BE OMITTED ON THE HIGH SIDE OF SUPERELEVATED HORIZONTAL CURVES.

SEE STANDARD PLAN M605.10 FOR PIPE-AGGREGATE PAVEMENT UNDERDRAIN DETAILS AND OUTLET PIPE SPACING .

✳ ALTERNATE 45 mm ROCK BASE AS AVAILABLE ON JOB. 1.2 m DITCH DEPTH REQUIRED. SEE FIGURES 6-03.9 AND 6-03.10.

✳✳ TOP 120 mm PG XX-XX (SEE TABLE 6-07.1). REMAINING THICKNESS PG 64-22.

Medium Duty Rigid and Flexible Pavement and Shoulder Details for Two-way Traffic