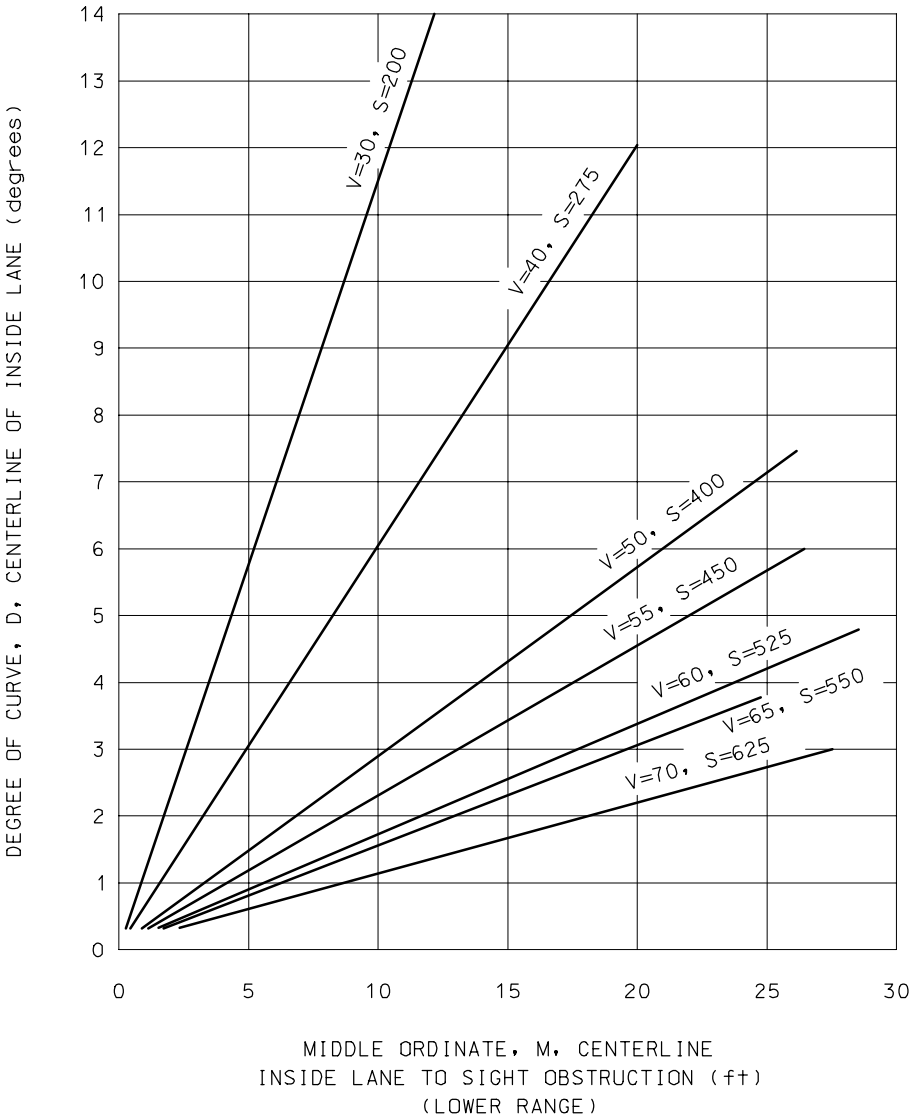

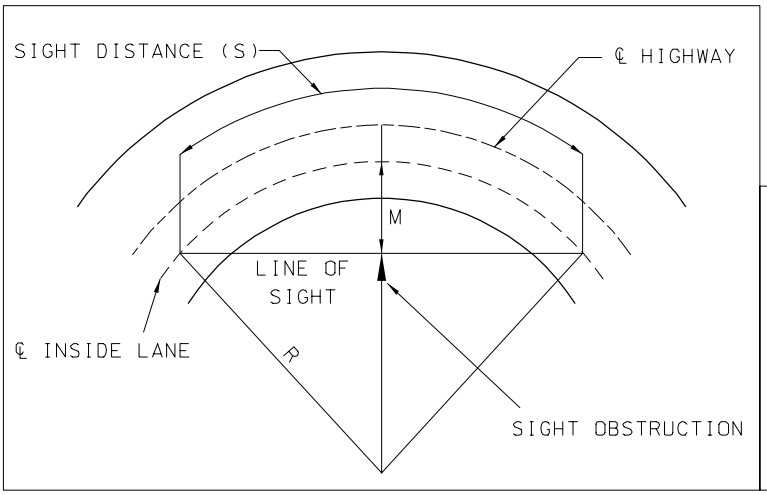

$$M = (5730 / D)(1 - \cos(SD / 200))$$
$$S = (200 / D) \cos^{-1}(1 - MD/5730)$$

M = MIDDLE ORDINATE (ft)
D = DEGREE OF CURVE
S = STOPPING SIGHT DISTANCE (ft)

Sight Distance on Horizontal Curves

Figure 4-04.2

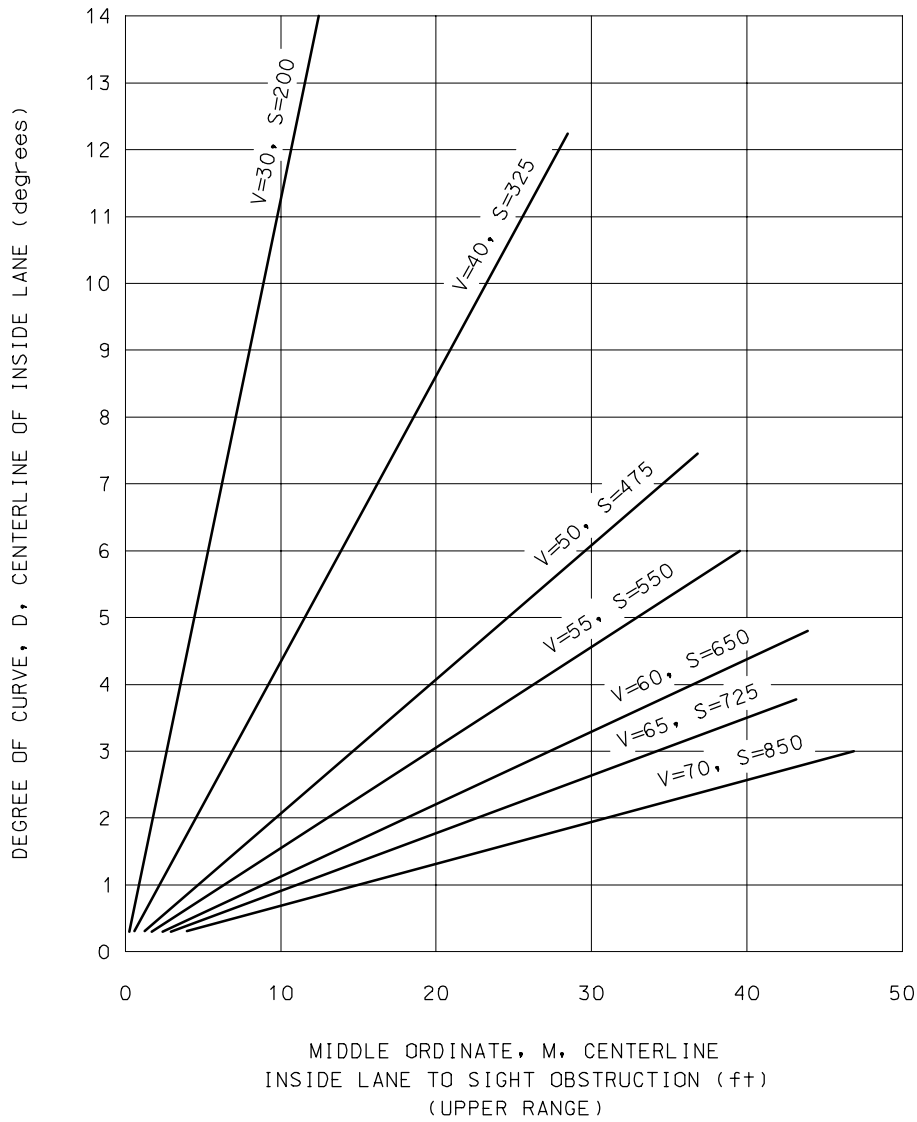

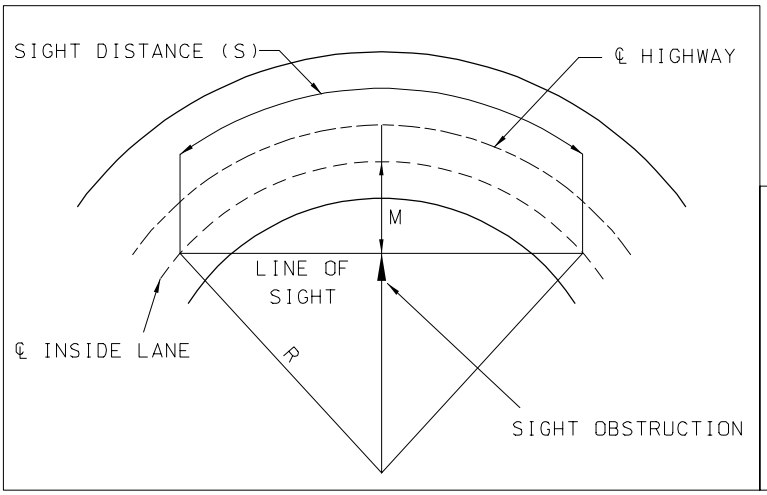

$M = (5730 / D)(1 - \cos(SD / 200))$

$S = (200 / D) \cos^{-1}(1 - MD / 5730)$

M = MIDDLE ORDINATE (ft)
D = DEGREE OF CURVE
S = STOPPING SIGHT DISTANCE (ft)

Sight Distance on Horizontal Curves

Figure 4-04.2

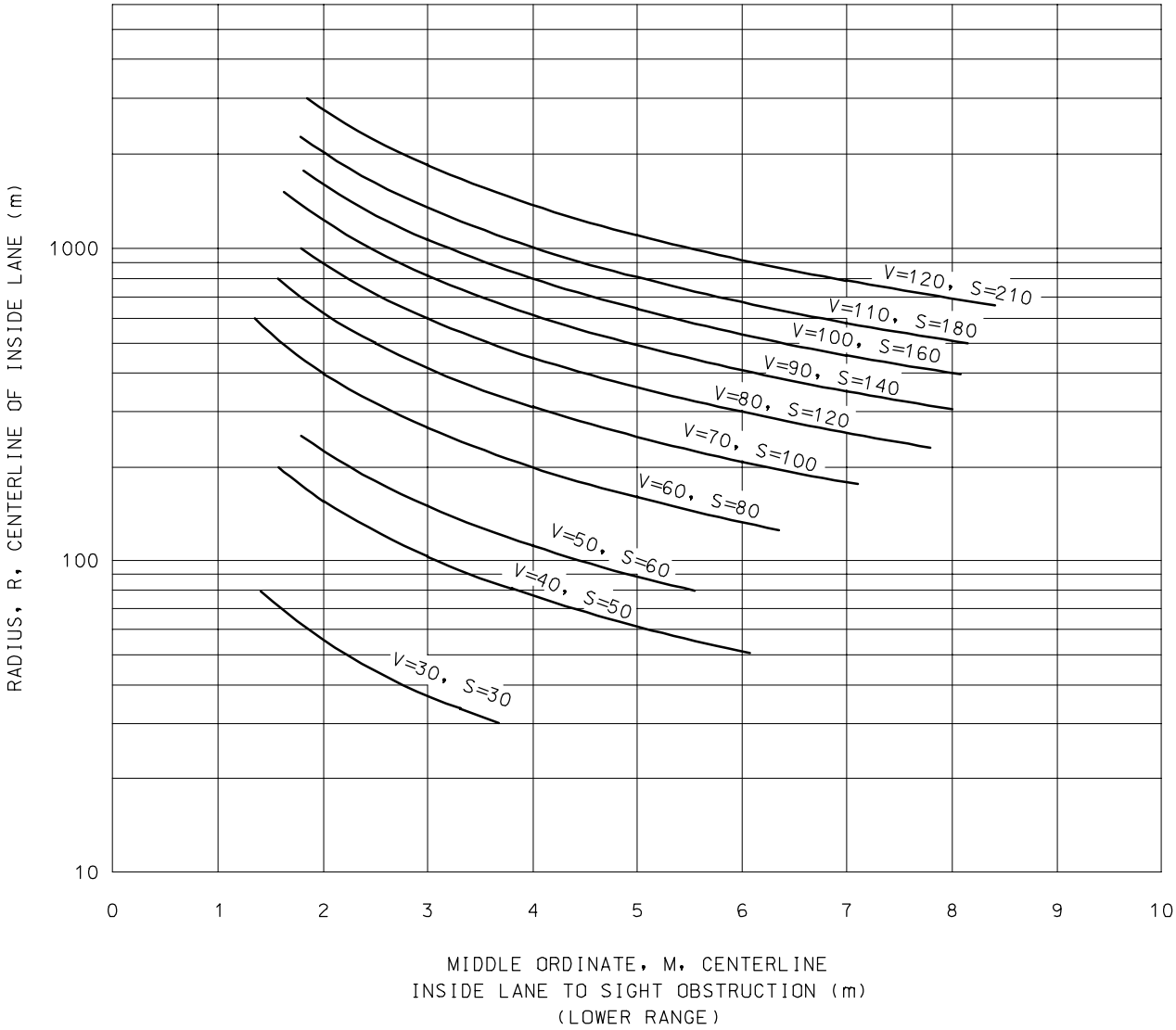

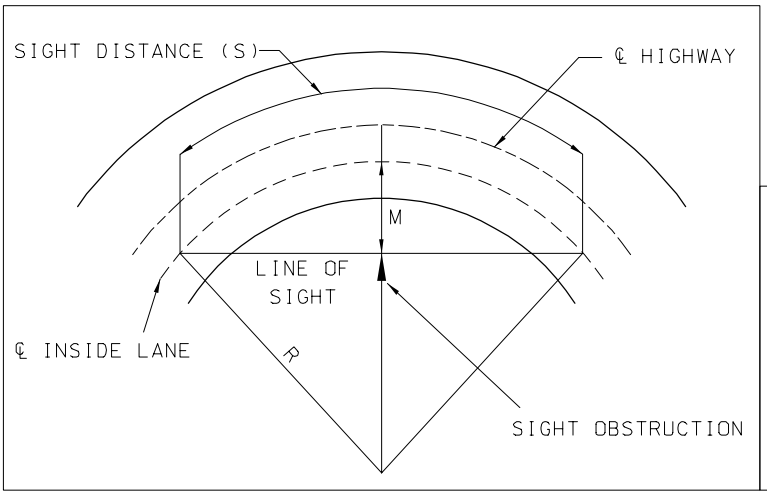

$M = R[1 - \cos(28.65 * S / R)]$

$S = (R / 28.65) \cos^{-1}(1 - M / R)$

M = MIDDLE ORDINATE (m)

R = RADIUS OF CURVE (m)

S = STOPPING SIGHT DISTANCE (m)

Sight Distance on Horizontal Curves

Figure 4-04.2

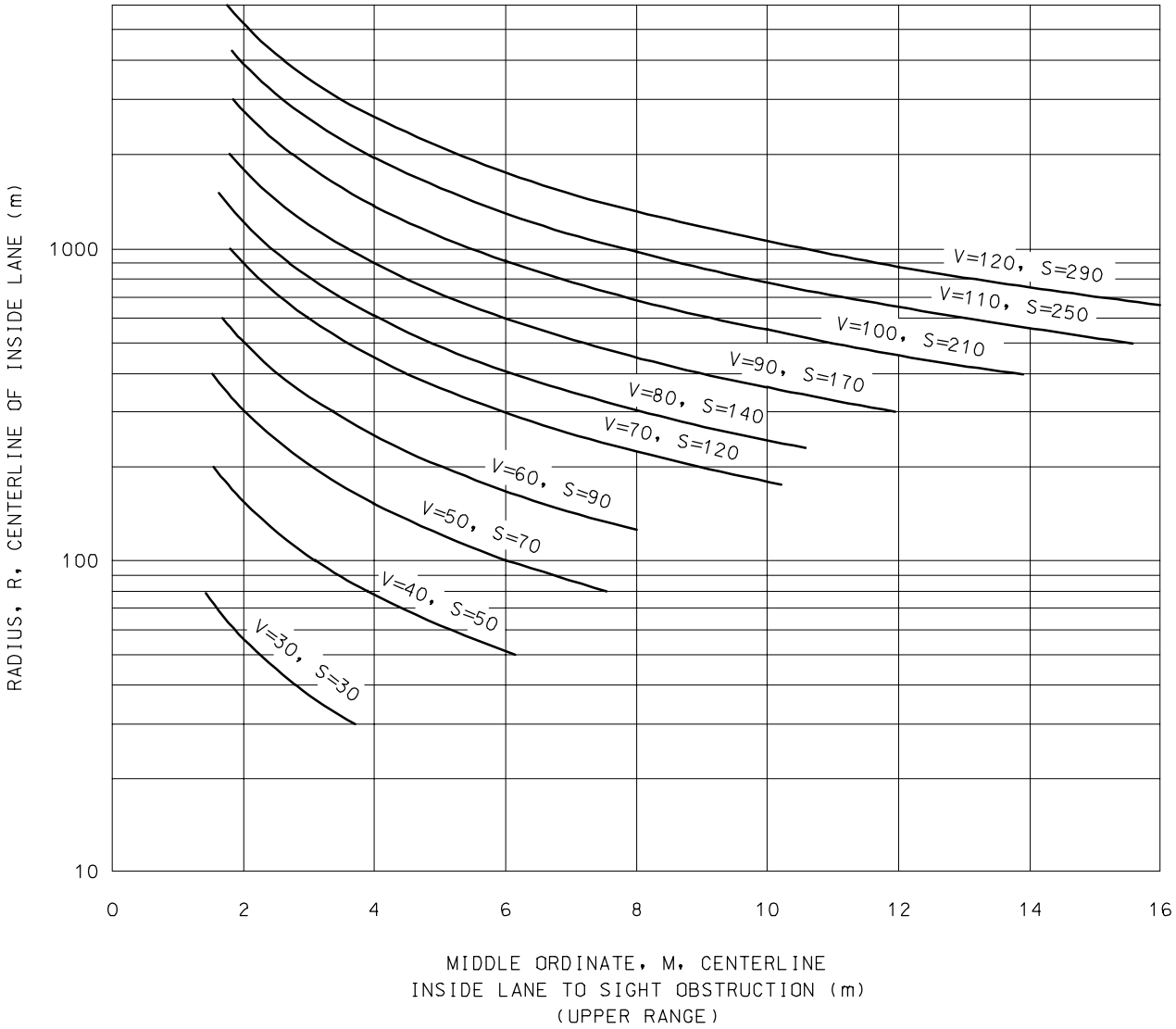

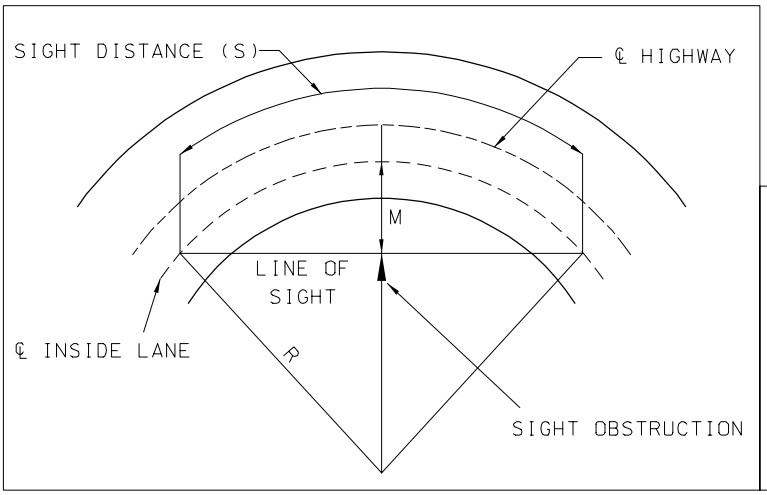

$M = R[1 - \cos(28.65 * S / R)]$

$S = (R / 28.65) \cos^{-1}(1 - M / R)$

M = MIDDLE ORDINATE (m)
R = RADIUS OF CURVE (m)
S = STOPPING SIGHT DISTANCE (m)

Sight Distance on Horizontal Curves

Figure 4-04.2