EFFECTIVE 07-01-2002

ROUTE	STATE	DISTRICT	SHEET NO.
	MO		

JOB NO.

PROJECT NO.

COUNTY

DATE

CROSS SLOPE

(1) 2.0%

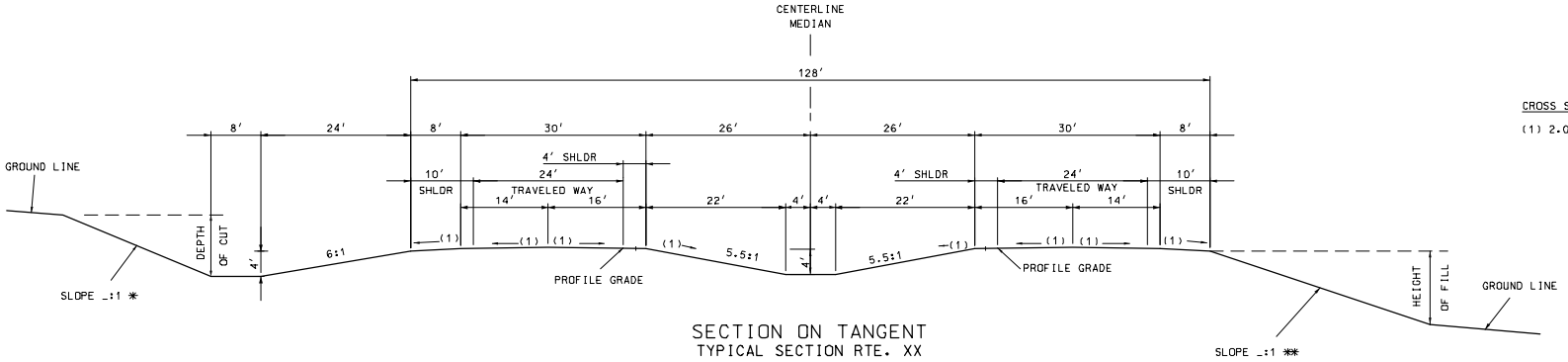

SECTION ON TANGENT
TYPICAL SECTION RTE. XX
STA. XXX.XX TO STA. XXX.XX

SEE STANDARDS 203.21, 606.00 AND 609.40 FOR SHOULDER WIDENING.

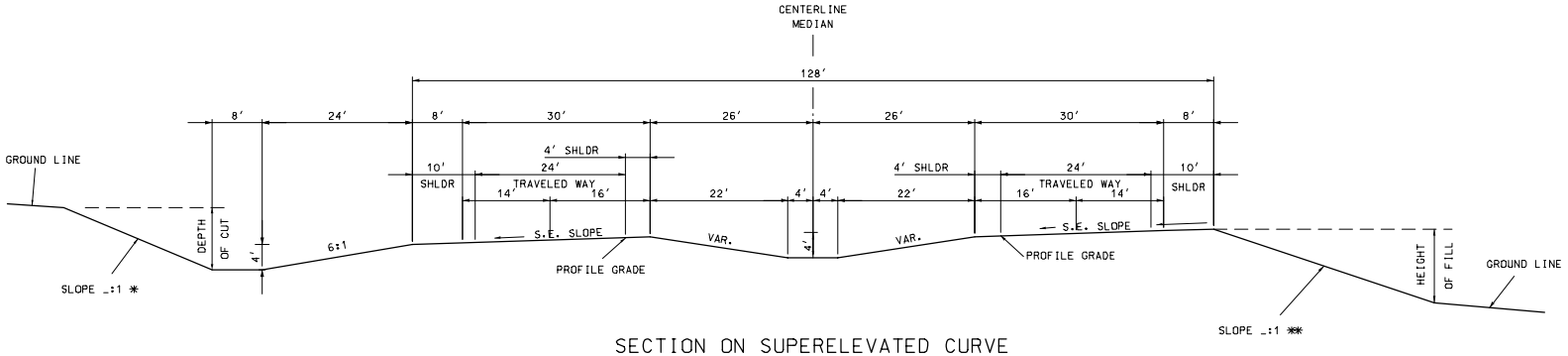

SECTION ON SUPERELEVATED CURVE
TYPICAL SECTION RTE. XX
STA. XXX.XX TO STA. XXX.XX

* BACKSLOPE DETERMINED BY SOIL SURVEY.

** THE FILL SLOPE SHALL BE 6:1 OR FLATTER WHEN THE FILL HEIGHT IS EQUAL TO OR LESS THAN 4 FEET (I.E., THE OFFSET FROM THE TOE OF FILL TO THE SHOULDER POINT IS A MINIMUM OF 24 FEET). THE SLOPE MAY VARY TO MEET THIS REQUIREMENT. FOR FILL HEIGHTS GREATER THAN 4 FEET, THE SLOPE SHALL NOT EXCEED THE MAXIMUM SLOPE DETERMINED BY THE SOIL SURVEY.

D-61E	
FUNCTION	INTERSTATE/PRINCIPAL ARTERIAL
ADT	> 1700
TRAVELED WAY WIDTH	24'
ROADBED WIDTH	128'
FORESLOPE	6:1
DITCH	4'

ROUTE	STATE	DISTRICT	SHEET NO.
	MO		

JOB NO.

PROJECT NO.

COUNTY

DATE_____

EFFECTIVE 07-01-2002

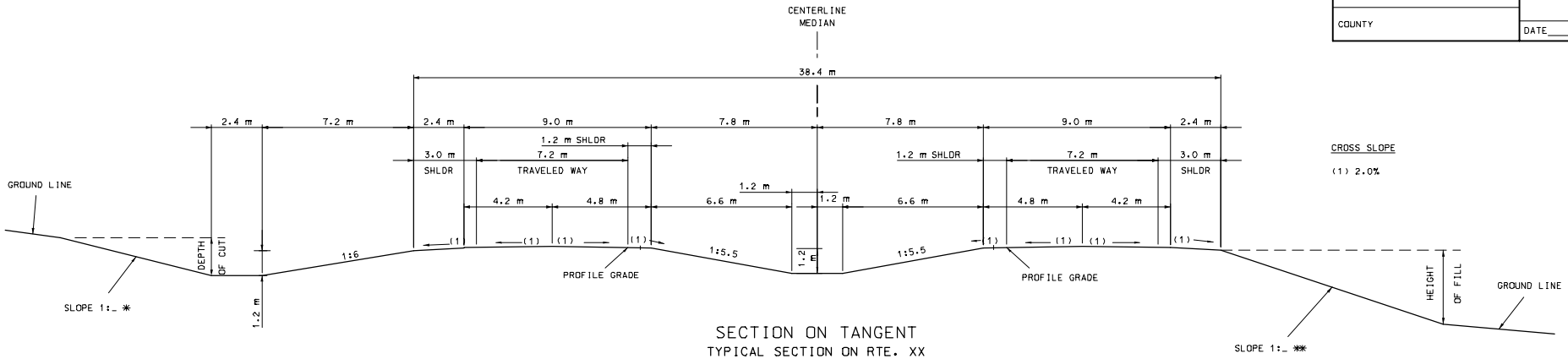

CROSS SLOPE

(1) 2.0%

SECTION ON TANGENT

TYPICAL SECTION ON RTE. XX

STA. X+XXX.XXX TO STA. X+XXX.XXX

SEE STANDARDS M203.21, M606.00 AND M609.40 FOR SHOULDER WIDENING.

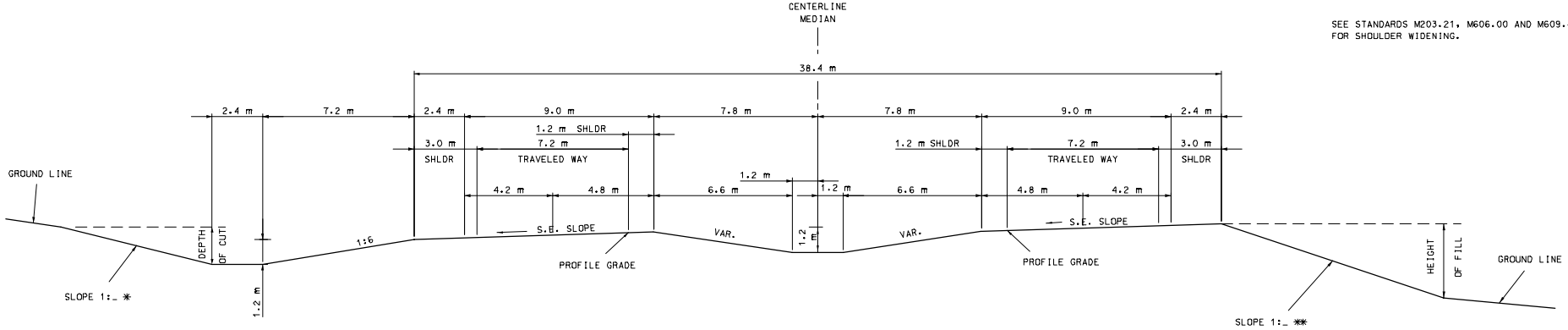

SECTION ON SUPERELEVATED CURVE

TYPICAL SECTION ON RTE. XX

STA. X+XXX.XXX TO STA. X+XXX.XXX

* BACKSLOPE DETERMINED BY SOIL SURVEY.

** THE FILL SLOPE SHALL BE 1:6 OR FLATTER WHEN THE FILL HEIGHT IS EQUAL TO OR LESS THAN 1.2 METERS (I.E. THE OFFSET FROM THE TOE OF FILL TO THE SHOULDER POINT IS A MINIMUM OF 7.2 METERS). THE SLOPE MAY VARY TO MEET THIS REQUIREMENT. FOR FILL HEIGHTS GREATER THAN 1.2 METERS, THE SLOPE SHALL NOT EXCEED THE MAXIMUM SLOPE DETERMINED BY THE SOIL SURVEY.

SLOPE CONVENTION IS METRIC (V:H).

M-D-61E	
FUNCTION	INTERSTATE/PRINCIPAL ARTERIAL
ADT	> 1700
TRAVELED WAY WIDTH	7.2 m
ROADBED WIDTH	39 m
FORESLOPE	1:6
DITCH	1.2 m