EFFECTIVE 07-01-2002

ROUTE	STATE	DISTRICT	SHEET NO.
	MO		

JOB NO.

PROJECT NO.

COUNTY

DATE_____

CROSS SLOPE

(1) 2.0%
(2) 2.0% FOR PAVED SHOULDERS
4.0% FOR AGGREGATE SHOULDERS
(3) S.E. SLOPE IF GREATER THAN
4.0% FOR AGGREGATE SHOULDERS
S.E. SLOPE FOR PAVED SHOULDERS

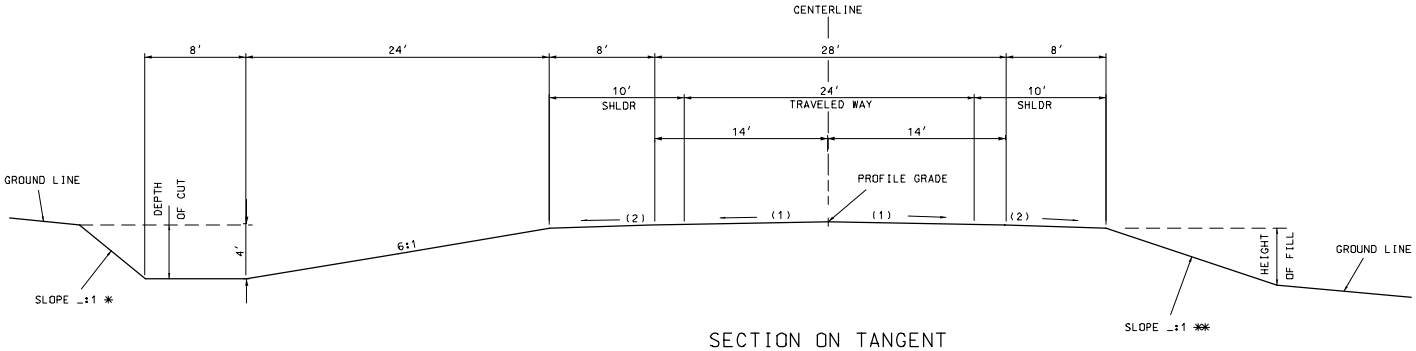

SECTION ON TANGENT
TYPICAL SECTION RTE. XX
STA. XXX.XX TO STA. XXX.XX

SEE STANDARDS 203.20, 606.00 AND 609.40 FOR SHOULDER WIDENING.

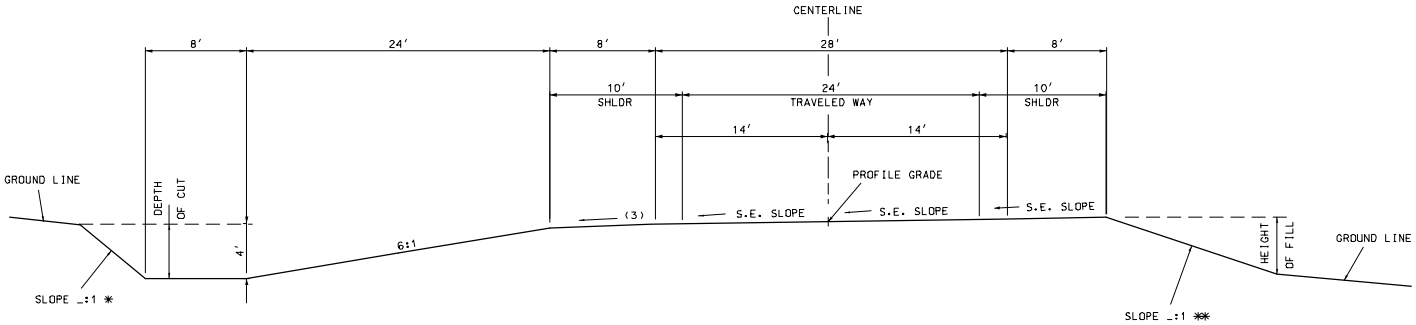

SECTION ON SUPERELEVATED CURVE
TYPICAL SECTION RTE. XX
STA. XXX.XX TO STA. XXX.XX

* BACKSLOPE DETERMINED BY SOIL SURVEY.

** THE FILL SLOPE SHALL BE 6:1 OR FLATTER WHEN THE FILL HEIGHT IS EQUAL TO OR LESS THAN 4 FEET (I.E., THE OFFSET FROM THE TOE OF FILL TO THE SHOULDER POINT IS A MINIMUM OF 24 FEET). THE SLOPE MAY VARY TO MEET THIS REQUIREMENT. FOR FILL HEIGHTS GREATER THAN 4 FEET, THE SLOPE SHALL NOT EXCEED THE MAXIMUM SLOPE DETERMINED BY THE SOIL SURVEY.

D-60D	
FUNCTION	PRINCIPAL ARTERIAL
ADT	< 1700
TRAVELED WAY WIDTH	24'
ROADBED WIDTH	44'
FORESLOPE	6:1
DITCH	4'

EFFECTIVE 07-01-2002

ROUTE	STATE	DISTRICT	SHEET NO.
	MO		

JOB NO.

PROJECT NO.

COUNTY

DATE_____

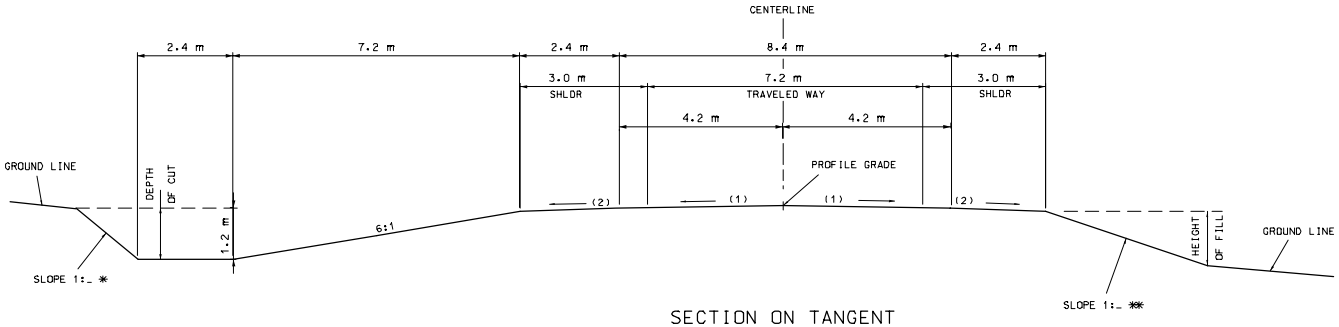

SECTION ON TANGENT
TYPICAL SECTION RTE. XX
STA. XXX.XX TO STA. XXX.XX

CROSS SLOPE

(1) 2.0%
(2) 2.0% FOR PAVED SHOULDERS
4.0% FOR AGGREGATE SHOULDERS
(3) S.E. SLOPE IF GREATER THAN
4.0% FOR AGGREGATE SHOULDERS
S.E. SLOPE FOR PAVED SHOULDERS

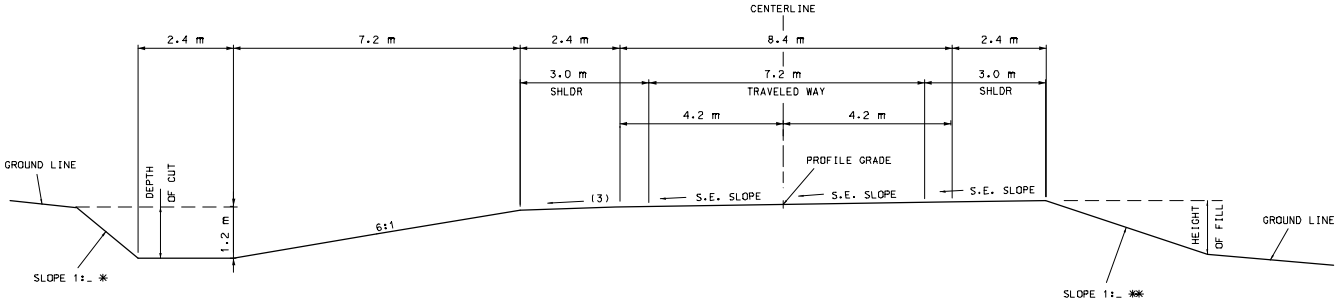

SECTION ON SUPERELEVATED CURVE
TYPICAL SECTION RTE. XX
STA. XXX.XX TO STA. XXX.XX

SEE STANDARDS M203.20, M606.00 AND M609.40 FOR SHOULDER WIDENING.

* BACKSLOPE DETERMINED BY SOIL SURVEY.

** THE FILL SLOPE SHALL BE 1:6 OR FLATTER WHEN THE FILL HEIGHT IS EQUAL TO OR LESS THAN 1.2 METERS (I.E. THE OFFSET FROM THE TOE OF FILL TO THE SHOULDER POINT IS A MINIMUM OF 7.2 METERS). THE SLOPE MAY VARY TO MEET THIS REQUIREMENT. FOR FILL HEIGHTS GREATER THAN 1.2 METERS, THE SLOPE SHALL NOT EXCEED THE MAXIMUM SLOPE DETERMINED BY THE SOIL SURVEY.

SLOPE CONVENTION IS METRIC (V:H).

M-D-60D	
FUNCTION	PRINCIPAL ARTERIAL
ADT	< 1700
TRAVELED WAY WIDTH	7.2 m
ROADBED WIDTH	13.2 m
FORESLOPE	1:6
DITCH	7.2 m