MEDIUM DUTY PAVEMENT
DUAL LANE FACILITIES
RIGID

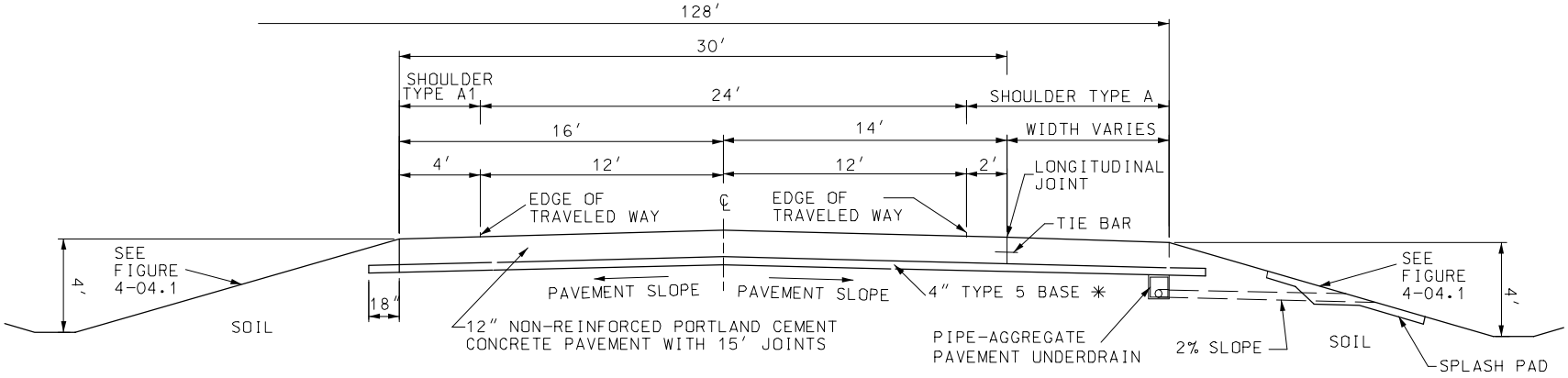

NOTES:

LONGITUDINAL PAVEMENT UNDERDRAIN, CONSISTING OF GEOTEXTILE FABRIC, DRAINAGE AGGREGATE, 4 INCH PERFORATED PIPE, OUTLET PIPES, SPLASH PADS AND TRENCHING SHALL BE OMITTED ON THE HIGH SIDE OF SUPERELEVATED HORIZONTAL CURVES OR IN FILL AREAS AS DIRECTED BY THE DISTRICT MATERIALS ENGINEER.

SEE STANDARD PLAN 605.10 FOR PIPE-AGGREGRATE PAVEMENT UNDERDRAIN DETAILS AND OUTLET PIPE SPACING.

FLEXIBLE

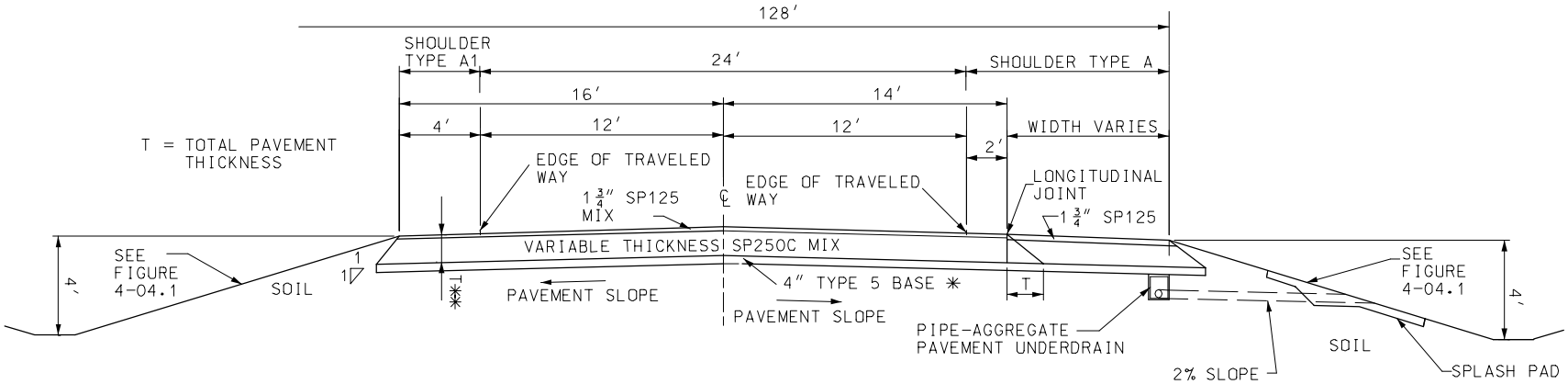

✳ ALTERNATE 18″ ROCK BASE AS AVAILABLE ON JOB. 4′ DITCH DEPTH REQUIRED. SEE FIGURES 6-03.9 AND 6-03.10.

✳✳ TOP 4 3/4″ PG XX-XX (SEE TABLE 6-07.1). REMAINING THICKNESS PG 64-22.

Medium Duty Rigid and Flexible Pavement and Shoulder Details for Dual Lane Facilities.

MEDIUM DUTY PAVEMENT
DUAL LANE FACILITIES
RIGID

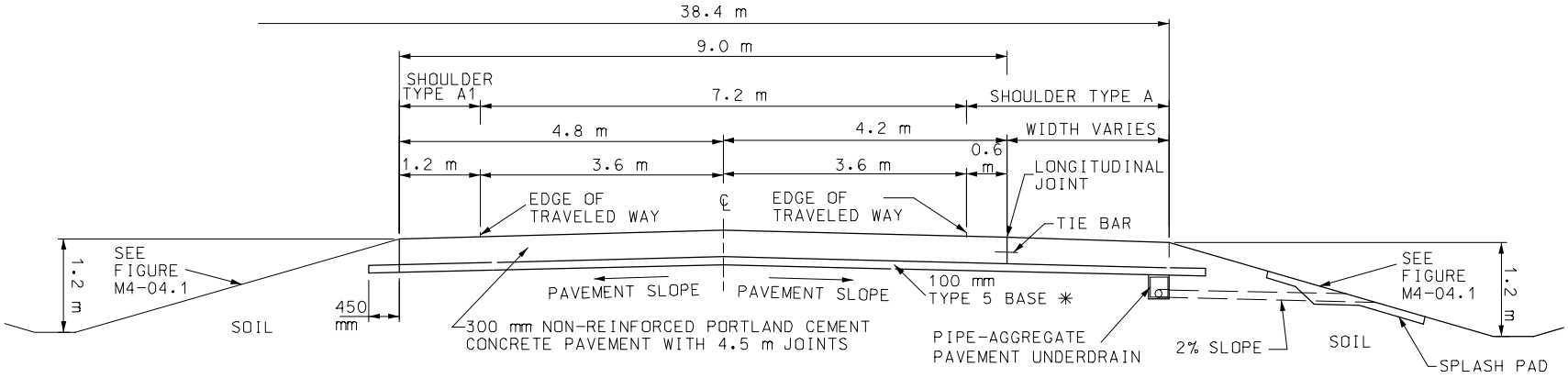

NOTES:

LONGITUDINAL PAVEMENT UNDERDRAIN, CONSISTING OF GEOTEXTILE FABRIC, DRAINAGE AGGREGATE, 100 mm PERFORATED PIPE, OUTLET PIPES, SPLASH PADS AND TRENCHING SHALL BE OMITTED ON THE HIGH SIDE OF SUPERELEVATED HORIZONTAL CURVES OR IN FILL AREAS AS DIRECTED BY THE DISTRICT MATERIALS ENGINEER.

SEE STANDARD PLAN M605.10 FOR PIPE-AGGREGRATE PAVEMENT UNDERDRAIN DETAILS AND OUTLET PIPE SPACING.

FLEXIBLE

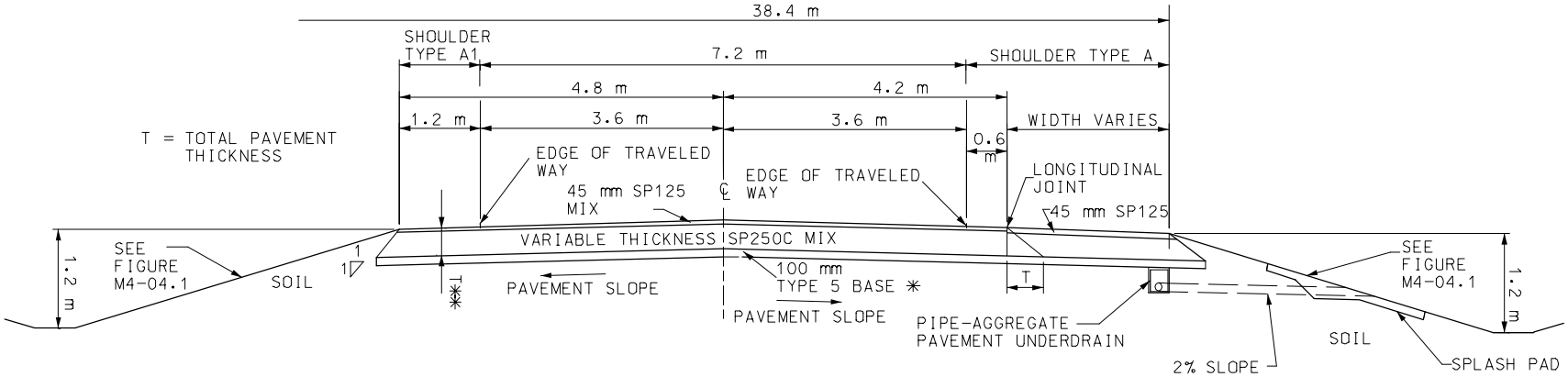

✳ ALTERNATE 450 mm ROCK BASE AS AVAILABLE ON JOB. 1.2 m DITCH DEPTH REQUIRED. SEE FIGURES M6-03.9 AND M6-03.10.

✳✳ TOP 120 mm PG XX-XX (SEE TABLE 6-07.1). REMAINING THICKNESS PG 64-22.

Medium Duty Rigid and Flexible Pavement and Shoulder Details for Dual Lane Facilities.