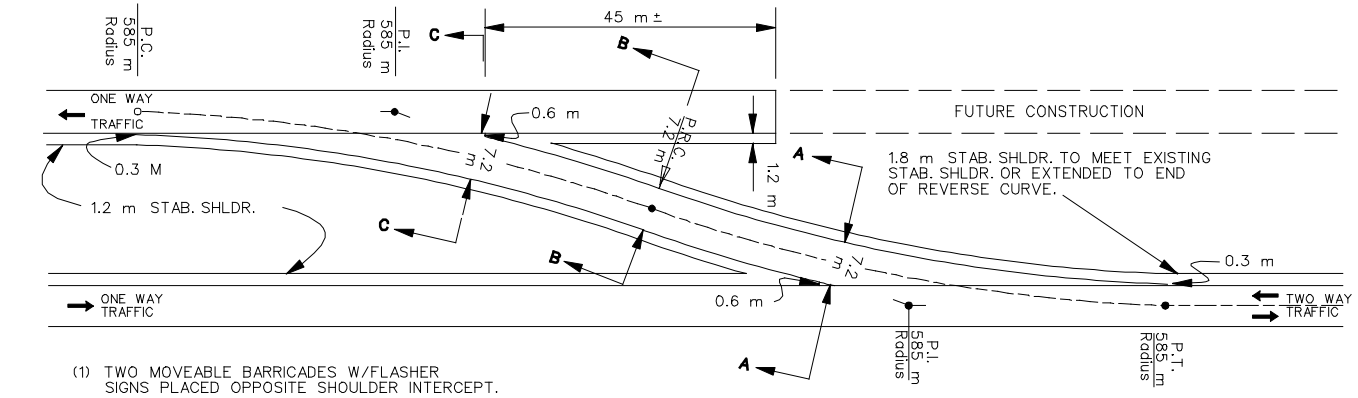

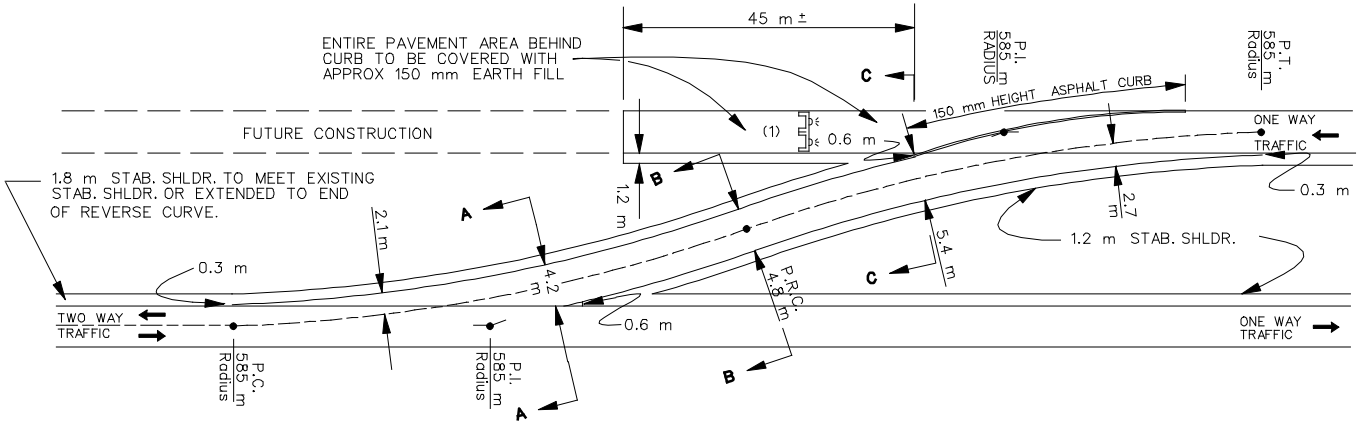

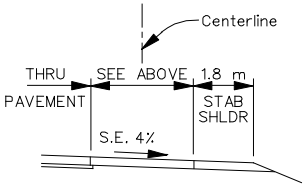

SECTION A-A

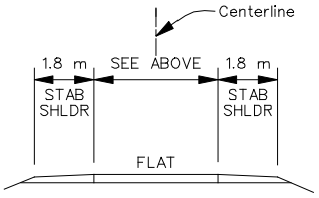

SECTION B-B

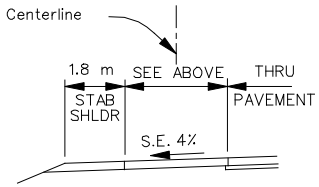

SECTION C-C

NOTES:

PAVEMENT FOR CROSS-OVERS, MOVABLE BARRICADES, FLASHER SIGNS, ASPHALT CURB AND EARTH FILL TO BE PROVIDED UNDER CONTRACT.

PAVEMENT MARKINGS AND SIGNING TO BE DONE BY MAINTENANCE DIVISION.

Standard Temporary Connection for Transition from Single to Dual Lane

Figure 4-09.4

Sheet 1 of 2
Rev. 7-1-98

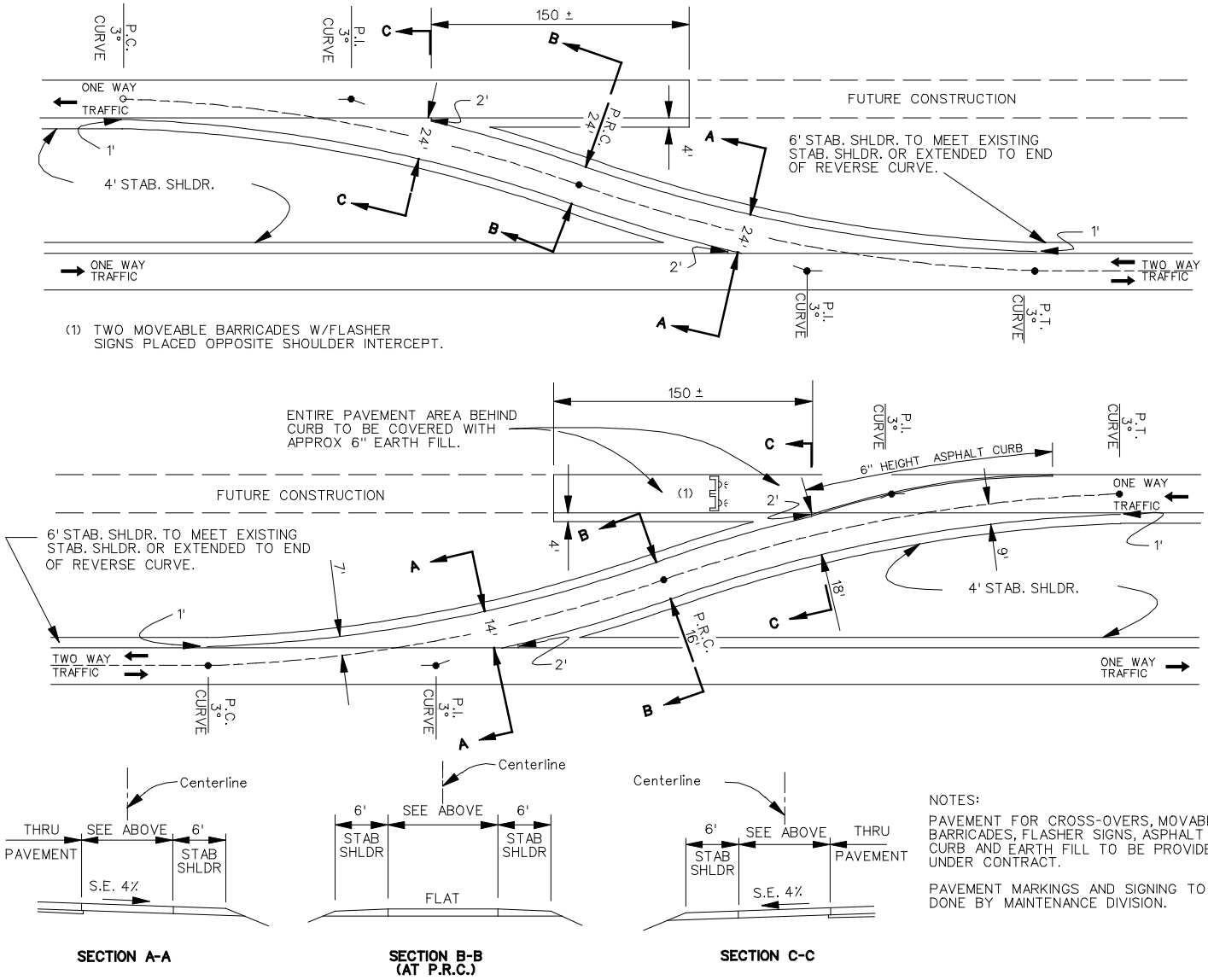

NOTES:

PAVEMENT FOR CROSS-OVERS, MOVABLE BARRICADES, FLASHER SIGNS, ASPHALT CURB AND EARTH FILL TO BE PROVIDED UNDER CONTRACT.

PAVEMENT MARKINGS AND SIGNING TO BE DONE BY MAINTENANCE DIVISION.

Standard Temporary Connection for Transition from Single to Dual Lane

Figure 4-09.4