SP.106
DATE 4/22/07

DESIGN

SHT. 1 of 1

RTE. _____ CO. _____ LOC. _____ AUTHOR Ed Warhol

JOB NO. _____ SUBJECT Bldg 2309 Entry Door CHK. _____

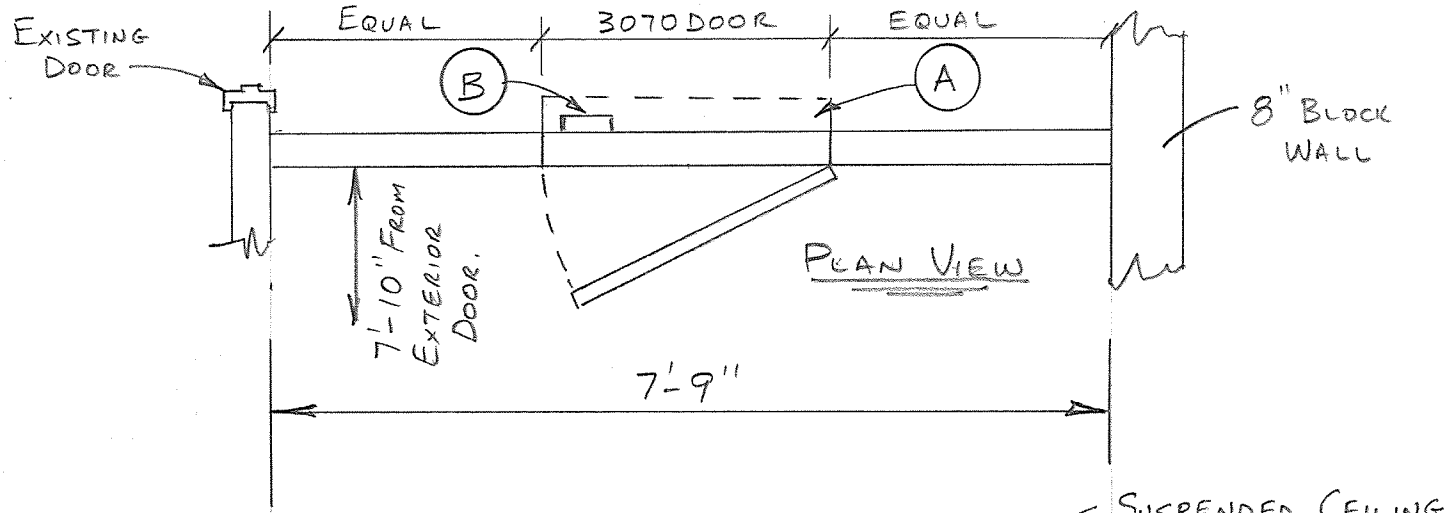

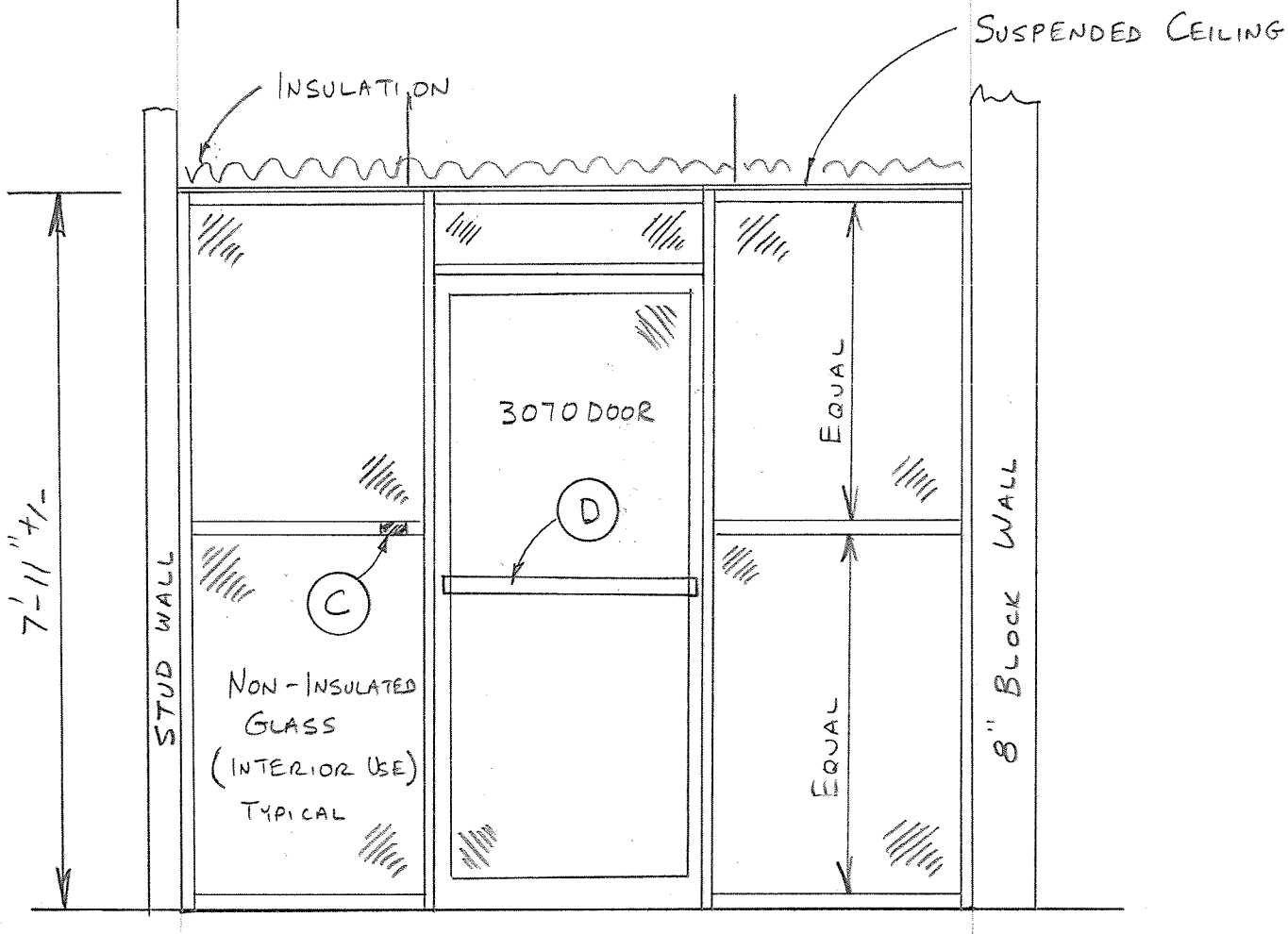

North Elevation

Door Misc 1 - Bldg 2309