MISSOURI DEPARTMENT OF TRANSPORTATION
INFORMAL QUOTE GUIDELINES AND DOCUMENTATION
FOR PURCHASES FROM $3,000 TO $24,999.99

THIS IS NOT AN ORDER

REQUEST FOR QUOTATION

It is the vendor's responsibility to read and comply with all conditions, specifications, and instructions outlined in this document. This document and any subsequent attachments shall supersede all confirmation forms, receipts, or any other paperwork needed to secure materials, equipment, or services.

TODAY'S DATE: JUNE 20, 2008	**QUOTE DUE BY:** **10:00 AM CST – 7/3/08**	F.O.B. REQUIREMENTS: DESTINATION
TO BE DELIVERED/COMPLETED NO LATER THAN: **AUGUST 15, 2008**	**QUOTATION #: D9090007R9** THIS QUOTATION # SHOULD BE REFERENCED ON ALL MAILING LABELS, ENVELOPES, AND ANY OTHER CORRESPONDENCE.	**BUYER: CARMELLA GREEN** **PHONE NUMBER: 417-469-6253** **FAX NUMBER: 417-469-3449**

District Mailing Address: Missouri Department of Transportation District 9 Procurement PO Box 220 Willow Springs, MO 65793	Delivery Locations: Missouri Department of Transportation 10681 E. State Highway E Cadet, MO 63630

ALL QUOTATIONS MUST BE EXTENDED AND TOTALED. DELIVERY TIME MUST BE LISTED

Quantity	U/M	DESCRIPTION (including size and/or part #'s)	UNIT PRICE	UNIT PRICE EXTENSION	DELIVERY TIME
		Materials and installation for a septic system at			
		Potosi Incarcerated Crew Facility. See attached			
		Engineering Design and Specifications.			
		The contractor is responsible for all State and			
		County health permits required for the installation.			
		Contractor is responsible for contacting Dig-Rite.			
		The contractor is also responsible for a fully			
		operational septic system.			
		Prevailing wage order #15 for Washington County			
		will preside.			
TOTAL ORDER EXTENSION					

VENDOR NAME:

Certificate of Good Standing

The Bidder must be in compliance with the laws regarding conducting business in the State of Missouri. Within ten (10) business days of notification, the Bidder will need to provide a copy of his/her Missouri Secretary of State's "Certificate of Good Standing" prior to the issuance of any contract or initial purchase order by the Missouri Department of Transportation (MoDOT). MoDOT reserves the right, at its sole discretion, to extend the date this documentation must be provided. The Bidder's inability to provide this documentation will result in his/her bid being rejected.

HB600 Compliance

The Bidder must be in compliance with the laws regarding conducting business in the State of Missouri. The Bidder should ensure they are in good standing with the Missouri Department of Revenue. Prior to award MoDOT staff will check with the Missouri Department of Revenue to ensure compliance with the provisions of RsMO 34.040.6. If necessary, a "Certificate of No Tax Due" may be requested of the successful Bidder. If such a certificate is requested, the Bidder's inability to provide this documentation will result in his/her bid being rejected.

VENDOR NOTES

Missouri Department of Transportation purchase orders must be issued to the invoicing company/address. If the invoicing company/address will be different from that listed in the vendor information section (below), the vendor must specify the "remit to" company/address in the vendor notes section (above).

VENDOR INFORMATION

Vendor Name/Mailing Address:	Vendor Contact Information (including area codes): Phone #: Fax #: Cellular #: Federal ID #:
Printed Name and Title of Responsible Officer or Employee:	Signature:

Is your company registered/certified with the State of Missouri as a (please circle):

MINORITY BUSINESS ENTERPRISE (MBE) ?	YES	NO
WOMEN BUSINESS ENTERPRISE (WBE) ?	YES	NO
Would your company like information on becoming a registered/certified MBE/WBE vendor?	YES	NO

All responses to this Request for Quotation MUST be submitted on this form and all pages MUST be returned to the Buyer listed above at the District mailing address shown.

PREFERENCE IN PURCHASING PRODUCTS

DATE: _____

The bidders attention is directed to Section 34.076 RsMO 1986 which gives preference to Missouri corporations, firms, and individuals when letting contracts or purchasing products.

Bids/Quotations received will be evaluated on the basis of this legislation.

All vendors submitting a bid/quotation must furnish <u>ALL</u> information requested below.

FOR CORPORATIONS:

State in which incorporated: _____

FOR OTHERS:

State of domicile: _____

FOR ALL VENDORS:

List address of Missouri offices or places of business:

_____

_____

_____

_____

_____

_____

_____

THIS SECTION MUST BE COMPLETED AND SIGNED:

FIRM NAME: _____

ADDRESS: _____

CITY: _____ **STATE:** _____ **ZIP:** _____

BY (signature required): _____

Federal Tax I.D. #: _____ **if no Federal Tax I.D. # - list Social Security #:** _____

NOTE: For bid/quotation to be considered, the "Preference in Purchasing Products" form must be on file in the General Services (Procurement) Division and must be dated in the current calendar year.

STANDARD SOLICITATION PROVISIONS

a. The Missouri Department of Transportation (MoDOT) reserves the right to reject any or all bids/quotes/proposals, and to accept or reject any items thereon, and to waive technicalities. In case of error in the extension of prices in the bid/quote/proposal, unit prices will govern.

b. All bids/quotes/proposals must be signed with the firm name and by a responsible officer or employee. Obligations assumed by such signature must be fulfilled.

c. By virtue of statutory authority, a preference will be given to materials, products, supplies, provisions and all other articles produced, manufactured, made or grown, within the State of Missouri.

d. Time of delivery is a part of the consideration and, if not otherwise stated in the solicitation documents, must be stated in definite terms by the Bidder/Offeror and must be adhered to. If time varies on different items, the Bidder/Offeror shall so state.

e. If providing bids/quotes/proposals for commodities, the Bidder/Offeror will state brand or make on each item. If bidding or proposing other than the make, model or brand specified, the manufacturer's name, model number or catalog number must be given.

f. **For bids/proposals of $25,000** or more, no bids/proposals by telephone, telegram or telefax will be accepted.

g. The date specified for the returning of bids/quotes/proposals is a firm deadline and all bids/quotes/proposals must be received at the designated office by that time. The Department does not recognize the U.S. Mail, Railway Express Agency, Air Express, or any other organization, as its agent for purposes of accepting proposals. All proposals arriving at the designated office after the deadline specified will be rejected.

GENERAL TERMS AND CONDITIONS

General Performance

a. This work is to be performed under the general supervision and direction of the Missouri Department of Transportation (MoDOT) and, if awarded any portion of the work, the Contractor agrees to furnish at his own expense all labor and equipment required to complete the work, it being expressly understood that this solicitation is for completed work based upon the price(s) specified and is not a solicitation for rental of equipment or employment of labor by MoDOT, and MoDOT is to have no direction or control over the employees used by the Contractor in performance of the work.

Deliveries

a. Unless otherwise specified on the solicitation documents or purchase order, suppliers shall give at least 24 hours advance notice of each delivery. Delivery will only be received between the hours of 8:00 a.m. to 3:00 p.m., Monday through Friday. Material arriving after 3:00 p.m. will not be unloaded until the following workday. No material will be received on Saturday, Sunday or state holidays.

b. If the prices bid herein include the delivery cost of the material, the Contractor agrees to pay all transportation charges on the material as FOB - Destination. Freight costs must be included in the unit price bid and not listed as a separate line item.

c. Any demurrage is to be paid by the Contractor direct to the railroad or carrier.

Nondiscrimination

a. The Contractor shall comply with the Regulations relative to nondiscrimination in federally-assisted programs of the Department of Transportation, Title 49, Code of Federal Regulations, Part 21, as they may be amended from time to time, (hereinafter referred to as the Regulations), which are herein incorporated by reference and made a part of this contract.

b. All solicitations either by competitive bidding or negotiation made by the Contractor for work to be performed under a subcontract, including procurements of materials or leases of the Contractor's obligations under this contract and the Regulations, will be relative to nondiscrimination on the grounds of race, color, or national origin.

1) Sanctions for Noncompliance: In the event of the Contractor's noncompliance with the nondiscrimination provisions of this contract, MoDOT shall impose such contract sanctions as it or the Federal Highway Administration may determine to be appropriate, including, but not limited to:

i. withholding of payments to the Contractor under the contract until the Contractor complies, and/or,

ii. cancellation, termination or suspension of the contract, in whole or in part.

Contract/Purchase Order

a. By submitting a bid/quote/proposal, the Bidder/Offeror agrees to furnish any and all equipment, supplies and/or services specified in the solicitation documents, at the prices quoted, pursuant to all requirements and specifications contained therein.

b. A binding contract shall consist of: (1) the solicitation documents, amendments thereto, and/or Best and Final Offer (BAFO) request(s) with any changes/additions, (2) the Contractor's proposal and/or submitted pricing, and (3) the MHTC's acceptance of the proposal and/or bid by purchase order or post-award contract.

c. A notice of award does not constitute an authorization for shipment of equipment or supplies or a directive to proceed with services. Before providing equipment, supplies and/or services, the Contractor must receive a properly authorized purchase order and/or notice to proceed.

d. The contract expresses the complete agreement of the parties and performance shall be governed solely by the specifications and requirements contained therein. Any change, whether by modification and/or supplementation, must be accomplished by a formal contract amendment signed and approved by and between the duly authorized representative of the Contractor and the duly authorized representative of the MHTC, by a modified purchase order prior to the effective date of such modification. The Contractor expressly and explicitly understands and agrees that no other method and/or no other document, including correspondence, acts, and oral communications by or from any person, shall be used or construed as an amendment or modification.

Subcontracting

a. It is specifically understood that no portion of the material or any interest in the contract, shall be subcontracted, transferred, assigned or otherwise disposed of, except with the written consent of MoDOT. Request for permission to subcontract or otherwise dispose of any part of the work shall be in writing to MoDOT and accompanied by documentation showing that the organization which will

perform the work is particularly experienced and equipped for such work.

b. Consent to subcontract or otherwise dispose of any portion of the work shall not be construed to relieve the Contractor of any responsibility for the production and delivery of the contracted work and the completion of the work within the specified time.

c. All payments for work performed by a subcontractor shall be made to the Contractor to whom the contract was awarded and the purchase order issued.

Invoicing and Payment

a. MoDOT is exempt from paying Missouri Sales Tax, Missouri Use Tax and Federal Excise Tax. However, the Contractor may themselves be responsible for the payment of taxes on materials they purchase to fulfill the contract. A Federal Excise Tax Exemption Certificate will be furnished to the successful Bidder/Offeror upon request.

b. Each invoice should be itemized in accordance with items listed on the purchase order and/or contract. The statewide financial management system has been designed to capture certain receipt and payment information. Therefore, each invoice submitted must reference the purchase order number and must be itemized in accordance with items listed on the purchase order. Failure to comply with this requirement may delay processing of invoices for payment.

c. Unless otherwise provided for in the solicitation documents, payment for all equipment, supplies, and/or services required herein shall be made in arrears. The Missouri Highways and Transportation Commission (MHTC) shall not make any advance deposits.

d. The MHTC assumes no obligation for equipment, supplies, and/or services shipped or provided in excess of the quantity ordered. Any authorized quantity is subject to the MHTC's rejection and shall be returned at the Contractor's expense.

e. The MHTC reserves the right to purchase goods and services using the state-purchasing card.

Applicable Laws and Regulations

a. The contract shall be construed according to the laws of the State of Missouri. The Contractor shall comply with all local, state, and federal laws and regulations related to the performance of the contract.

b. The Contractor must be registered and maintain good standing with the Secretary of State of the State of Missouri and other regulatory agencies, as may be required by law or regulations. Prior to the issuance of a purchase order and/or notice to proceed, the Contractor may be required to submit to MoDOT a copy of their current Authority Certificate from the Secretary of State of the State of Missouri.

1) Prior to the issuance of a purchase order and/or notice to proceed, all **out-of-state** Contractors **providing services** within the state of Missouri must submit to MoDOT a copy of their current Transient Employer Certificate from the Department of Revenue, in addition to a copy of their current Authority Certificate from the Secretary of State of the State of Missouri.

c. The exclusive venue for any legal proceeding relating to or arising, out of the contract shall be in the Circuit Court of Cole County, Missouri.

a. The Contractor shall comply with all the provisions of Executive Order 07-13, issued by the Honorable Matt Blunt, Governor of Missouri, on the sixth (6th) day of March, 2007. This Executive Order, which promulgates the State of Missouri's position to not tolerate persons who contract with the state engaging in or supporting illegal activities of employing individuals who are not eligible to work in the United States, is incorporated herein by reference and made a part of this Agreement.

1) "By signing this Agreement, the Contractor hereby certifies that any employee of the Contractor assigned to perform services under the contract is eligible and authorized to work in the United States in compliance with federal law."

2) In the event the Contractor fails to comply with the provisions of the Executive Order 07-13, or in the event the Commission has reasonable cause to believe that the contractor has knowingly employed individuals who are not eligible to work in the United States in violation of federal law, the Commission reserves the right to impose such contract sanctions as it may determine to be appropriate, including but not limited to contract cancellation, termination or suspension in whole or in part or both.

3) The Contractor shall include the provisions of this paragraph in every subcontract. The Contractor shall take such action with respect to any subcontract as the Commission may direct as a means of enforcing such provisions, including sanctions for noncompliance.

Preferences

a. In the evaluation of bids/quotes/proposals, preferences shall be applied in accordance with Chapter 34 RSMo. Contractors should apply the same preferences in selecting subcontractors.

b. By virtue of statutory authority, RSMo. 34.076 and 34.350 to 34.359, a preference will be given to materials, products, supplies, provisions and all other articles produced, manufactured, made or grown within the State of Missouri. Such preference shall be given when quality is equal or better and delivered price is the same or less.

1) If attached, the document entitled **"PREFERENCE IN PURCHASING PRODUCTS"** should be completed and returned with the solicitation documents.

2) If attached, the document entitled **"MISSOURI DOMESTIC PRODUCTS PROCUREMENT ACT"** should be completed and returned with the solicitation documents**. Applies if bid is Twenty-Five Thousand Dollars ($25,000.00) or more.**

c. In the event of a tie of low bids, the MHTC reserves the right to establish the method to be used in determining the award

Remedies and Rights

a. No provision in the contract shall be construed, expressly or implied, as a waiver by the MHTC of any existing or future right and/or remedy available by law in the event of any claim by the MHTC of the Contractor's default or breach of contract.

b. The Contractor agrees and understands that the contract shall constitute an assignment by the Contractor to the MHTC of all rights, title and interest in and to all causes of action that the Contractor may have under the antitrust laws of the United States or State of Missouri for which causes of action have accrued or will accrue as the result of or in relation to the particular equipment, supplies, and/or services purchased or produced by the Contractor in the fulfillment of the contract with the MHTC.

c. In the event a Contractor becomes involved in, or is threatened with, litigation with a subcontractor or supplier as a result of such direction, the Contractor may request MoDOT to enter into such litigation to protect the interests of the MHTC, and, in addition, the Contractor may request the United States to enter into such litigation to protect the interests of the United States.

Cancellation of Contract

a. The MHTC may cancel the contract at any time for a material breach of contractual obligations or for convenience by providing the Contractor with written notice of cancellation. Should the MHTC exercise its right to cancel the contract for such reasons, cancellation will become effective upon the date specified in the notice of cancellation sent to the Contractor.

b. If the MHTC cancels the contract for breach, the MHTC reserves the right to obtain the equipment, supplies, and/or services to be provided pursuant to the contract from other sources and upon such terms and in such manner as the MHTC deems appropriate and charge the Contractor for any additional costs incurred thereby.

Bankruptcy or Insolvency

a. Upon filing for any bankruptcy or insolvency proceeding by or against the Contractor, whether voluntary or involuntary, or upon the appointment of a receiver, trustee, or assigned the benefit or creditors, the Contractor must notify MoDOT immediately. Upon learning of any such actions, the MHTC reserves the right, at its sole discretion, to either cancel the contract or affirm the contract and hold the Contractor responsible for damages.

Inventions, Patents, and Copyrights

a. The Contractor shall defend, protect, and hold harmless the MHTC, its officers, agents, and employees against all suits of law or in equity resulting from patent and copyright infringement concerning the Contractor's performance or products produced under the terms of the contract.

Inspection and Acceptance

a. No equipment, supplies, and/or services received by MoDOT pursuant to a contract shall be deemed accepted until MoDOT has had reasonable opportunity to inspect said equipment, supplies, and/or services.

b. All equipment, supplies, and/or services which do not comply with the specifications and/or requirements or which are otherwise unacceptable or defective may be rejected. In addition, all equipment, supplies, and/or services which are discovered to be defective or which do not conform to any warranty of the Contractor upon inspection (or at any later time if the defects contained were not reasonably ascertainable upon the initial inspection) may be rejected.

c. The MHTC reserves the right to return any such rejected shipment at the Contractor's expense for full credit or replacement and to specify a reasonable date by which replacements must be received.

d. The MHTC's right to reject any unacceptable equipment, supplies, and/or services shall not exclude any other legal, equitable or contractual remedies the MHTC may have.

Warranty

a. The Contractor expressly warrants that all equipment, supplies, and/or services provided shall: (1) conform to each and every specification, drawing, sample or other description which was furnished to or adopted by MoDOT, (2) be fit and sufficient for the purpose expressed in the solicitation documents, (3) be merchantable, (4) be of good materials and workmanship, and (5) be free from defect.

b. Such warranty shall survive delivery and shall not be deemed waived either by reason of the MHTC's acceptance of or payment for said equipment, supplies, and/or services.

Status of Independent Contractor

a. The Contractor represents itself to be an independent Contractor offering such services to the general public and shall not represent itself or its employees to be an employee of the MHTC. Therefore, the Contractor shall assume all legal and financial responsibility for taxes, FICA, employee fringe benefits, workers' compensation, employee insurance, minimum wage requirements, overtime, etc., and agrees to indemnify, save and hold the MHTC, its officers, agents and employees harmless from and against any and all losses (including attorney fees) and damage of any kind related to such matters.

Indemnification

a. The Offeror shall defend, indemnify and hold harmless the Commission, including its members and department employees, from any claim or liability whether based on a claim for damages to real or personal property or to a person for any matter relating to or arising out of the Offeror's performance of its obligations under this Agreement.

SPECIAL TERMS AND CONDITIONS

Insurance

a. The Contractor shall purchase and maintain such insurance as will protect him from claims under workmen's compensation acts and other employee benefit acts, from claims for damages because of bodily injury, including death, and from claims for damages to property which may arise out of or result from the Contractor's operations under this Contract, whether such operations be by himself or by any Subcontractor or anyone directly or indirectly employed by any of them.

b. This insurance shall be written for not less than any limits of liability specified as part of this contract, or required by law, whichever is the greater, and shall include contractual liability insurance as applicable to the Contractor's obligations under this contract. Unless otherwise specified, insurance limits shall be as follows:

1) Workmen's Compensation: Workers Compensation Insurance, including "Occupational Disease Act" requirements, must be maintained **if** required by law.

2) Public Liability (includes property damage and personal injury):

i. Not less than $400,000 for any one person in a single accident or occurrence.

ii. Not less than $2,500,000 for all claims arising out of a single occurrence.

3) Special Hazard Insurance: As required.

4) Builder's Risk: Not less than the full Contract amount.

Prevailing Wage

a. If the bid/quote/proposal is accepted, the vendor will be required to comply with the prevailing wages as fixed by the Missouri Department of Labor and Industrial Relations, in effect as of the date of the issuance of the solicitation, for each affected craft and type of workmen in the following county(ies): **Washington. T**he Annual Wage Order #15 may be inspected at any District Office or at the Central Office in Jefferson City, MO.

b. The Contractor shall submit notarized weekly payroll affidavit documentation included with the project request for payment. The successful vendor must provide a lien waiver from all material suppliers.

Award

Award of this bid/quote/proposal will be made on an “All Or Nothing” basis using the “lowest and best” principle of award.

Missouri Department of Health and Senior Services
On-Site Sewage System Construction Permit Application Packet

Instructions and Check Off List

Please type or print all information clearly. Provide all requested information accurately and completely. Incomplete applications will be returned for completion before a permit will be issued. As you complete the section, check the appropriate box. When all boxes are checked, the application is ready to return to the Health Department.

Provide the following information completely and accurately:

☐ 1. Property Owner: The name of the owner of the property as stated on the current deed, as recorded with the County Recorder.

☐ 2. Site Address: The address of the actual construction site of the system, including county. Complete the legal description (1/4 of 1/4 section, section, township, range), subdivision name and lot number, Latitude and Longitude, and the County Parcel Identification Number when known. Ask the County Assessor or check your real estate tax bill for this information.

☐ 3. Mailing address: The address that correspondence, permits, and other communications may be sent to. Include a daytime and an evening telephone number for the owner of the property.

☐ 4. System Is: Check the appropriate box to show the system is new construction (no system existed prior to this construction), system replacement (construction to replace present system), or system repair of an existing system (major repair of present system).

☐ 5. System Serves: Check residence or business, whichever is applicable. If a residence is attached to a business, check business but include residence in the system design. Provide the requested information below the appropriate box.

☐ 6. Water Supply: Check the appropriate box for your drinking water supply. City water, public water supply district, or a community system that meets Missouri Department of Natural Resources definitions of community public systems or non-community public systems are "Public"; provide the name of the supply. For "Private" supplies, give the type of supply. Locate the supply (well), neighboring supplies (wells) and water lines on the site layout.

☐ 7. Lot: Provide the lot size in acres or square feet. Give the percent slope and indicate on the Site Layout the direction of slope, and show a cross section of the slope and proposed system on the Slope Diagram.

Obtain soil data at the site, either a percolation test or soil morphology evaluation. Percolation tests must be performed by a certified percolation tester, or soil morphology evaluations must be performed by an onsite soil morphology evaluator, meeting the requirements in 19 CSR 20-3.080.

☐ 8. Soil Information: Check the appropriate box for percolation test or soil morphology, whichever is used. Indicate the slowest percolation rate as determined by the percolation test or indicate the proposed loading rate based on a soil morphology. Include a copy of the soil morphology evaluator's report or the percolation test forms with the application.

☐ 9. Name of Percolation Tester or Morphology Evaluator: Provide the name, address, telephone number, and identification number of the person providing the soil data.

☐ 10. Proposed System: Provide brief basic information about the proposed system; choose A, B, and/or C depending on the type of system. Provide the information necessary for that system. A Registered Professional Engineer must design systems checked as "Alternative"; include all data, calculations, drawings, or other information used to determine the design. Also include the Professional Engineer's name, address, telephone number, and seal. Locate the proposed system on the Site Layout (item 13) and show all setback distances, property lines, easements, and any other information requested.

☐ 11. Installer: Provide the name, address, telephone number and identification number of the person (not a firm) doing the system construction. Indicate if the installer is registered (y) or not (n).

Form is signed and dated; be sure percolation tests, soil morphology, and/or engineer's reports are all signed by the people providing the reports.

☐ 12. Signature of Owner or Agent: The property owner or designated agent must sign the form to attest to the accuracy and completion of the information in the packet.

☐ 13. Site Layout: Provide a drawing of the proposed system. Include all requested information from the application and on the Site Layout section.

☐ **Make copies of the application, Site Layout, all test results, reports, and drawings for your records.**

☐ **When you have completed the forms and checked off all of the boxes on this instruction sheet, return the application to the appropriate Department of Health and Senior Services office or county health department. DO NOT SEND WITH PERMIT APPLICATION FEE!**

☐ **Complete the On-Site Sewage Disposal System Construction Permit Application Fee form and submit it with your $90.00 permit application fee to the Missouri Department of Health and Senior Services, Fee Receipts, P.O. Box 570, Jefferson City, MO 65102. Do not send cash. Make checks or money orders payable to the Missouri Department of Health and Senior Services.**

MISSOURI DEPARTMENT OF HEALTH AND SENIOR SERVICES
ON-SITE SEWAGE TREATMENT AND DISPOSAL SYSTEM
CONSTRUCTION PERMIT APPLICATION

Application Number _____

Introduction

Thank you for contacting us concerning plans for your on-site sewage disposal system. As you may know, the Missouri Department of Health and Senior Services is required by law to regulate the design, construction and operation of on-site sewage disposal systems.

This packet contains forms and instructions to help you apply for a permit and to select an on-site sewage system that will comply with the regulations.

Enclosed in this packet you will find the following items:

1. The ON-SITE SEWAGE DISPOSAL SYSTEM CONSTRUCTION PERMIT APPLICATION FEE form.

2. The Permit Application form.

3. The Instruction and Check Off List.

Construction of your on-site sewage disposal system may not begin until a permit has been issued. To expedite this process, please follow these steps:

1. Contact an on-site sewage system contractor. A registered contractor will best be able to assist you with this process and is highly recommended. You also may choose to submit all of the information and install the system yourself or have a non-registered contractor assist you. However, the services of a certified person to conduct a percolation test or an authorized on-site morphology evaluator to provide a soil morphology will be required. The contractor should be able to help you select a system to suit your needs and will help you fill in the forms. You may also consult with your health department representative.

2. Fill in the "On-Site Sewage Disposal System Construction Permit Application Fee" form and submit it, along with the $90.00 fee, **to the address on the form.** NOTE: Submit fee and application to different addresses.

3. Use the "On-Site Sewage Permit Instructions and Check Off List" form to ensure that all of the required information has been gathered. Then, submit the completed application, percoloation test or soil morphology report, and all necessary drawings and plans **to the office from which you received the packet.**

4. Upon receipt of the completed application, a health department representative will schedule a site visit. If the results of the site visit and plan review are satisfactory and the permit application fee has been received, the permit will be issued and construction may begin.

If you or your contractor need additional information, or if we can help you with this in any way, please feel free to contact us.

MISSOURI DEPARTMENT OF HEALTH AND SENIOR SERVICES
ON-SITE SEWAGE SYSTEM
CONSTRUCTION PERMIT APPLICATION

Application Number	
Office use only	
Permit Number	
Reviewed By	EPHS #
EPHS Signature	

1. Property Owner Name (Last, First, MI): Missouri Department of Transportation
Contact: Phil Hamilton

2. Site Address (911/ENS): 10681 E. STATE Highway E

Subdivision: NA

Lot #:

City: Cadet

County: Washington

Zip code: 63630

Latitude:

Longitude:

1/4 1/4 Section Township Range

Parcel ID #

Directions to Site: From Potosi take Hwy 21 north To route E & Turn Right Follow E approximately ½ mile to Modot facility on Left

3. Mailing **Address** (if different from above): 3956 East Main Street

Day phone number: (417) 469-9061

Night phone number: (417) 252-0960

City: Willow Springs

State: MO

Zip code: 65793

4. **System Is** New Construction ☒ System Replacement ☐ System Repair ☐

5. **System serves** Residence ☐ Business ☒ Worker

Single Family ☐ No. Bedrooms: Whirlpool Bath ☐ Garbage Disposal ☐ Dishwasher ☐ Food Service ☐ NO Lodging ☐ NO Other (specify): Garage

Multi-Family ☐ Laundry Facility ☐

7 daily x 25GPD = 175GPD
13 Part time x 5 GPD = 65 GPD
Daily Sewage Flow (gallons per day) 240 GPD
Design at 300 GPD

6. Water Supply: Public ☐ Private ☒

Name of Supply:

Type Supply: Bored well ☐ Dug Well ☐ Driven well ☐ Drilled well ☒ Other (specify):

7. Lot MoDOT Size # acres More than 10 # square feet % Slope 5 to 10% 5% at select Field

Indicate direction of slope on Site Layout. South West

8. Soil Information: Include percolation test or soil morphology report with the application enclosed

Percolation Test ☐ Percolation Rate (min/inch)

Soil Morphology ☒ Application Rate (gpd/sq. ft.) conventional system = .4, alternate system, drip irrigation 0.2

9. **Name of Percolation Tester or Soil Evaluator**: Dan Klaproth

Tester Identification Number: 10080

Address: Smith & Company, 901 Vine Street

Phone Number: (573) 785-9621

City: Poplar Bluff

State: MO

Zip Code: 63901

MO 580-2180 (6-03)

E3.05

10. **Proposed System** Complete information only for the system you plan to construct.

A. ☐ Waste Stabilization Pond NO

Dimensions
length x width or diameter

Total Water Surface Area
square feet

Working Depth

NO Pond Seal

Native soil ☐ Artificial Liner ☐

Bentonite Clay ☐ Clay from another source ☐

Type of equipment used to compact soil:

Indicate location of discharge pipe, fence, gate, and all setback distances on Site Layout

B. ☒ Sewage Tank

Septic Tank – Pre treatment ☒ Liquid Capacity 500 gal.

Manufacturer: Material/Construction

NSF Class I Aeration Unit ☒ Treatment Capacity 500 gpd

Manufacturer: Material/Construction

Pump Tank ☒ Liquid Capacity 800 gal.

Manufacturer: Material/Construction

Distance from: Well ~280' Building House Tank – 10' Field – 25'

Property Lines ~240' Water Lines ~65' uphill

Stream, river, pond, or lake Neighbor's well NA

☐ NO Absorption Field

Distribution Box	☐	Pipe & Gravel-width ____	☐
Serial Distribution	☐	Chamber-width _____	☐
Flat Lot Layout	☐	Gravelless Pipe-dia. ____	☐
Dosed	☐	Other (specify)	☐
Pressure Distribution	☐	Total Absorption Area _____	

Trench Length(s) No. of Trenches

Trench Width Trench Depth

Distance from: Well House

Property Lines Water Lines

Stream, river, pond, or lake Neighbor's well

Show location of house, tank, absorption field, wells, water lines, bodies of water, geological features, easements, and all setback distances on the Site Layout.

C. ☒ Alternative System

Low Pressure Pipe System	☐	Sand Filter	☐	Mound System	☐
Drip Irrigation	☒	Wetlands	☐	Other (specify)	☐

Include supporting data, calculations, and drawings with the packet Included.

11. Installer | Registered y ☐ n ☐ | Identification Number

Name | Phone number ( ) -

Address

City State Zip code

All information contained in and with this application packet is true and accurate to the best of my knowledge.

12. Signature of Owner or Agent | Date

13. Site Layout

See enclosed design drawings

1. Show property lines and dimensions to reflect the shape and size of the property.
2. Diagram proposed system. Show appropriate elevations to indicate proper fall for system. System must be staked on the property for the Site Evaluation.
3. Show distances to house, well, water lines, property lines, geological features such as sinkholes, rock outcrops, lakes, ponds, streams, rivers, etc.
4. Show distances to neighbors' wells, homes, and sewage disposal systems.
5. Show locations of all percolation test holes or soil morphology test pits. Holes must be flagged on the property for site evaluation.
6. Show fence location around waste stabilization pond.
7. Use the slope diagram to show percent of slope. Use arrows on the Site Layout to indicate the direction of slope.
8. Indicate any known easements that exist for utilities, roads, private driveways, or other easements.

Slope Diagram

Show percent slope on diagram. Show cross section of system on slope.

MISSOURI DEPARTMENT OF HEALTH AND SENIOR SERVICES
PERCOLATION TEST RESULTS

Property owner _____ Site Address _____

Depth of hole _____ inches Test hole location _____

Diameter of hole _____ inches Date holes were prepared _____

Depth to restrictive layer _____ Time holes were initially filled _____ am/pm

Type of restrictive layer _____ Date test performed _____

% chert _____ Time test was started _____ am/pm

Name of Tester _____ Tester ID No. _____

Test Hole 1

Time	Interval (minutes)	Water Drop (fraction)	Water Drop (decimal)	Perc Rate

Test Hole 2

Time	Interval (minutes)	Water Drop (fraction)	Water Drop (decimal)	Perc Rate

Test Hole 3

Time	Interval (minutes)	Water Drop (fraction)	Water Drop (decimal)	Perc Rate

Test Hole 4

Time	Interval (minutes)	Water Drop (fraction)	Water Drop (decimal)	Perc Rate

Show all calculations and diagrams of test hole locations on the back of this form.

CALCULATIONS

DIAGRAM OF TEST HOLE LOCATIONS

1. Locate building or proposed building site.
2. Locate all test holes with distances from the building.
3. Locate any existing well and neighbor's well.
4. Locate property lines and all setback requirements.
5. Locate geological and topographical features.
6. Give slope and show direction of slope.

See enclosed design drawings

SIGNATURE OF TESTER Dan Klaproth 4/29/08

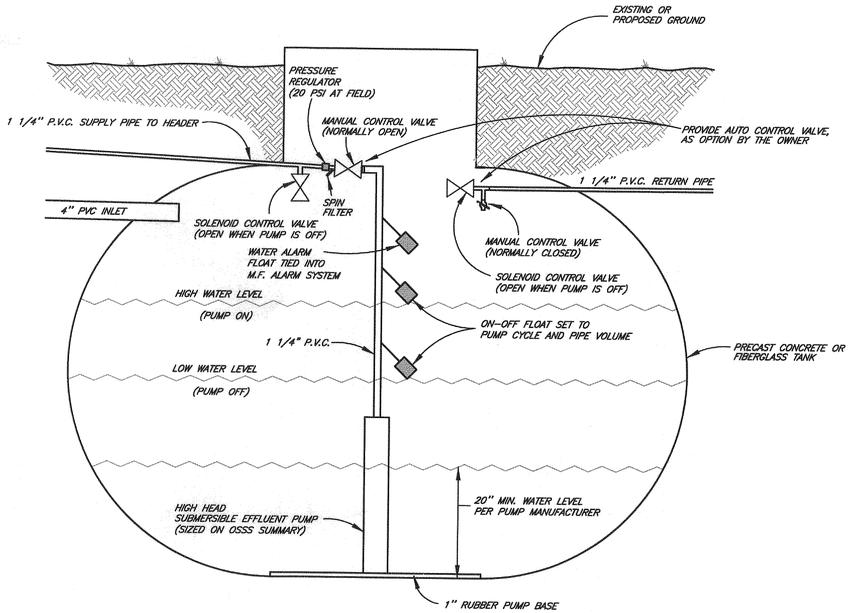

NOTE: DOSING TANK SHOWN WITH MANUAL BACK FLASH CONTROL VALVE. PROVIDE AUTO BACK FLASH CONTROL VALVES AS AN OPTION BY THE OWNER.

DOSING TANK
NOT TO SCALE

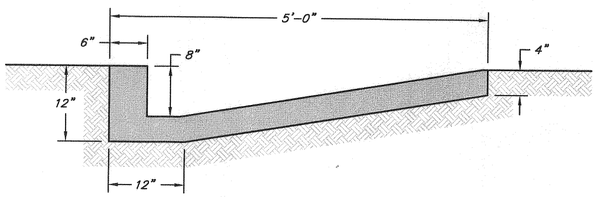

ASPHALT CURB AND GUTTER DETAIL
NOT TO SCALE

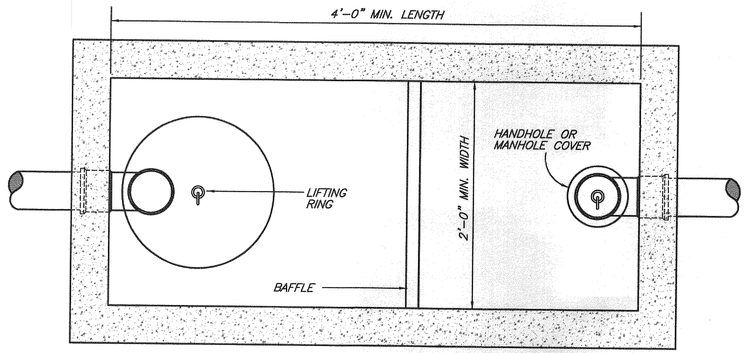

SEPTIC TANK - PLAN VIEW
NOT TO SCALE

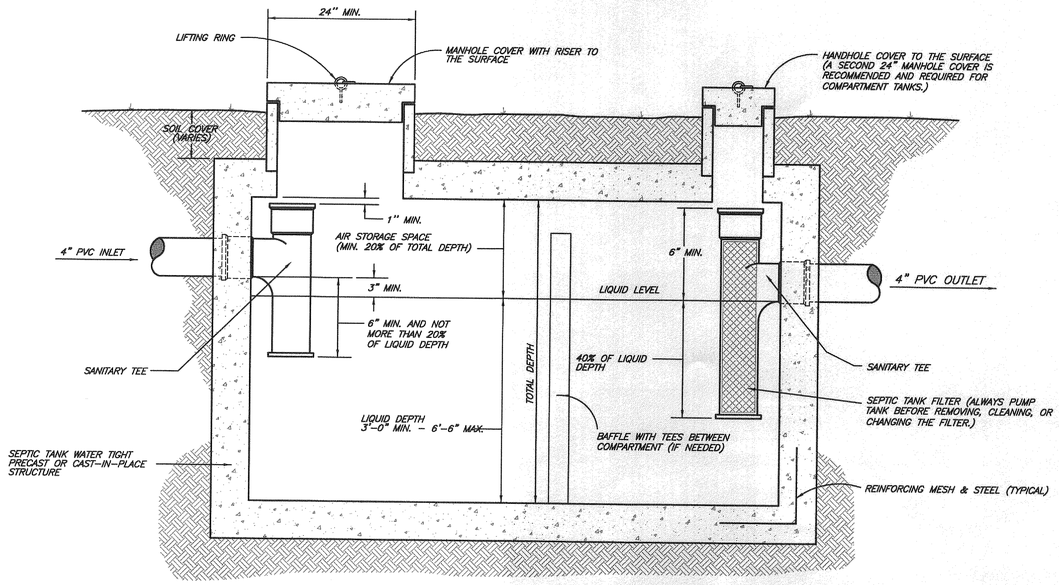

SEPTIC TANK - SECTION VIEW
NOT TO SCALE

TYPICAL NOTES:
TYPICAL DRAWIN SHOW THE TYPICAL SYSTEM LAYOUT. SEE THE DESIGN TABLE AND PROPOSED SITE PLAN FOR SPECIFIC LAYOUT AND SYSTEM SIZES.

SEAL: STATE OF MISSOURI DANIEL E. KLAPROTH NUMBER E-24031 REGISTERED PROFESSIONAL ENGINEER

NO.	REVISIONS	DATE	BY	APP.

SURVEYED BY: N/A DATE: N/A
DESIGNED BY: DEK DATE: 1/08
DRAWN BY: JDD, RDS DATE: 1/08
CHECKED BY: DEK DATE: 1/08
FIELD BOOK: N/A
DRAWING FILE: 508043.dwg
0 30 60
THIS BAR WILL MEASURE 1" WHEN PRINTED AT FULL SCALE.

SMITH&CO. ENGINEERS
901 VINE STREET; P.O. BOX 72
POPLAR BLUFF, MISSOURI 63902
(573) 785-9821 FAX: (573) 785-2651 WWW.SMSMITHCO.COM

ONSITE WASTEWATER TREATMENT SYSTEM
1601 RTE. E, POTOSI, WASHINGTON COUNTY, MO.

SEPTIC AND DOSING TANKS TYPICAL DETAILS

JOB #: 508043
DRAWING #: 3135
SHEET: 3

4/29/2008 2:53 PM F:\Tasks\508043 Mo001 8-MO-Potosi Dept. (SPTS-DWTS)\Drawings\508043.dwg

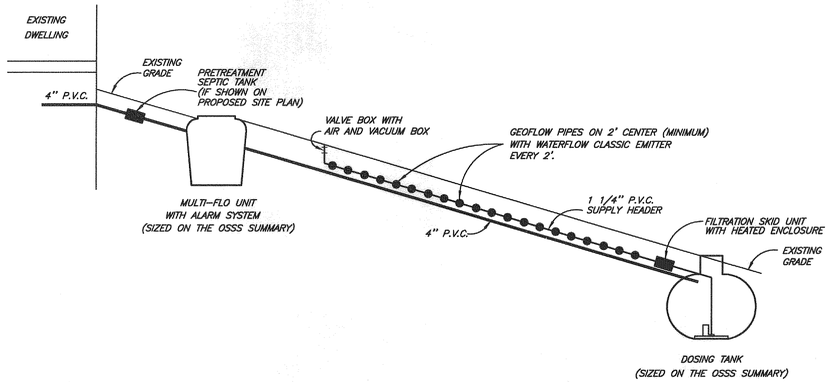

SIDE ELEVATION
NOT TO SCALE

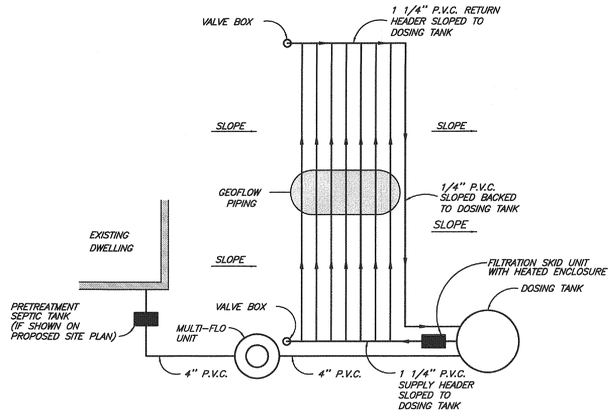

PLAN VIEW
NOT TO SCALE

TYPICAL DRIP IRRIGATION SYSTEM
NOT TO SCALE

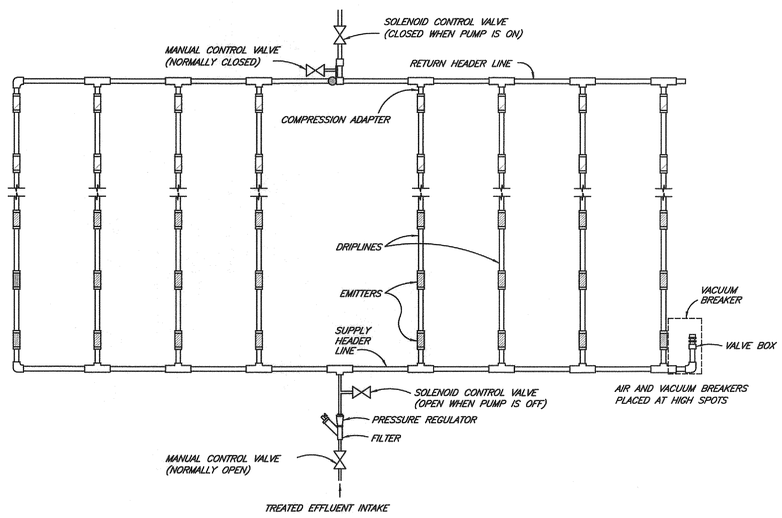

TYPICAL SUBSURFACE DISPOSAL FIELD INSTALLATION DETAIL
NOT TO SCALE

SMITH & COMPANY - Onsite Wastewater Treatment System (OWTS) DESIGN SHEET			PROJECT NO:	508043.45
CLIENT ADDRESS: Missouri Department of Highway - South Central Distract, Willow Spring, Missouri			CLIENT:	MoDOT District 9
			COUNT:	Washington County
LOT ADDRESS: 10681 East Highway E, Potosi, Washington County, Missouri			SUBDIVISION:	MoDOT Lot
The OWTS shall be installed using procedures and materials as required by Missouri Department of Health (DHSS) - Title 19, Division CSR 20, Chapter 3.06.				Permit No.=needed
Contact the local County DHSS before starting construction for a construction permits and during construction for a site inspection of each phase.				Final Design Date:
This Alternative OWTS shall be installed by an Registered Advanced Installer as listed DHSS. The Installer shall have installed a minimum of five similar systems.				**April 29, 2008**
ITEMS	**DHSS SECTION**	**DESIGNED SIZE / REQUIRED**	**DESIGN UNITS**	**UNITS TYPES**	**OWTS Design Size**
Lot or Area Number				**number**	**NA**
Lot Size				acres	about 10
Type of Establishment		for sewage treatment			garage
Food Service Operation		increase system by 150 percent		yes/no	no
Sewage Flow Rate	(1)(E)	workers= dailly7X25 gal.+13X5 = 240 GPD		gallons	240
		minimum of 240 gallons per day		gallons	240
Design Flow Rate, Selected by Owner		percent of the minimum sewage flow rate	100%	gallons	300
Sewage BOD Load	(1)(E)	persons X 0.17 pounds per person		pounds	0.63
Treatment - Septic Tanks Capacity	(4)	precast concrete, minimum liquid capacity		gallons	#N/A
Pre-Treatment - Septic Tanks Capacity		pretreatment before Class I Treatment		gallons	not required #NA
Treatment - Class I A Aerator Unit		minimum liquid capacity		gallons/day	500
Jet, Inc.; Class I Tank and Aerator Treatment Unit with pretreatment, treatment, and settling tanks			OR Equal	model	Jet Inc. - J-500
Alternative - Drip Irrigation Systems	(6)H	DRIP/LPP System, loading rate		gal./sq. ft.	0.2
American Manufacturing Perc-Rite Drip Dispersal Semi-Auto System with one zone and emitter			OR Equal	model	ABD121-S121
American Manufacturing Filtration Skid Unit with amdripenclosure and DH-Inshit heater kit			OR Equal	model	ASD-15, 15 GPM
American Manufacturing Auto Backflush Controll Unit for above System			OR Equal	model	Owner'd Options
Total Absorption Area Trench Size		flow / loading rate		square feet	1500
Absorption Trench Separation		2 feet		feet	2.0
Absorption Trench Depth		general 6" to 1.0 foot		feet	.5-1.0
Calculated Total Trench Length		total absorption area / trench width		feet	750
Number of Trenches		select number of trenches		number	10
Calculated Pipe/Trench Length		total trench length / number of trenches		feet	75.0
Designed Pipe/Trench Length to Install		between calculated and less than 200 feet		feet	75
Designed Total Pipe/Trench Length		select pipe length per trench X # of pipes		feet	750
Pipe/Trench Center to Center Spacing		2 feet		feet	2
Absorption Field Area		design pipe length x spacing x # of pipes		square feet	1500
Design System Pressure		measured midway on header pipe		PSI	20
Number of Emitters		pipe length / emitter spacing		number	375
Total Field Flow		drip irrigation emitters X 0.6 GPH	0.60	gal./hour	225.0
Total Field Flow or Dosing Pump Rate		emitters X emitters GPH/60 min.		gal./min.	3.8
Dosing Tank with Effluent Pump		fiberglass or precast concrete tank	800.00	gallons	800
High Head turbine Effluent Pump		12 GPM, 110 volts, model		head feet	over 100
F. E. Myers, High Head turbine Effluent Pump for effluent pumping			OR Equal	model	Myers 2NFL-51-12ET
Total Dosing Time		flow rate / pump rate		minutes	80.0
Number of Irrigation Dosing Cycles		pump controlled by floats		cycles	4
Irrigation Dosing Cycles Volume		flow rate / cycles (plus pipe volume)		gallons	75.0
Irrigation Dosing Cycles Time		total dosing time / cycles		minutes	20.0
Head - Design System Head at Emitters		Design System Pressure X 2.31		feet	46.2
Head - 1-1/4" PVC Supply Line		0.0386 per foot plus 20% for fitting	50	feet	2.3
Head - 1-1/4" PVC Return Line		0.0386 per foot plus 20% for fitting	135	feet	6.3
Head - Dosing Pump Unit		manufacture's chart		feet	NA
Head - Filtration Skid Unit		manufacture's chart		feet	14.0
Head - Elevation Change		high point - pump elevation		feet	7
Head - Longest Drip Lateral Line		drip line length from manufacture's chart	75	feet	16
Total Head Lose in System		head lose sum		feet	91.8
Total Head Lose in System		head lose sum / 2.31		PSI	39.7
Construct Loading Zones of Equal Lengths		distributing value for zones		yes/no	NO
Alternate Absorption Field Area		is space available for alternate system		yes/no	YES
NOTES: Contractor shall provide cost for items listed as Owner's Options.					YES
Contractor shall use the above listed equipment or equal. Units shall be field checked for locations, sizes, and elevations.					YES
Contractor shall provide the Owner with shop drawings, manufacture warranties, and service/maintenance schedule.					YES
Contractor shall warranty and service the system and equipment for two years.					YES
Owner shall service the system & equipment after two years. The manufacture's maintenance schedule should be completed.					YES
Do not allow extra rain runoff flow over the field area. Do not drive over the absorption field, yard tractors only					NA
The system will fail if not maintained, not cleared, not back flushed, tanks not pumped, or the absorption field is damaged.					NA

SYSTEM DESIGN TABLE

TYPICAL NOTES:
TYPICAL DRAWIN SHOW THE TYPICAL SYSTEM LAYOUT. SEE THE DESIGN TABLE AND PROPOSED SITE PLAN FOR SPECIFIC LAYOUT AND SYSTEM SIZES.

SEAL: STATE OF MISSOURI REGISTERED PROFESSIONAL ENGINEER DIANE E. KLAPROTH NUMBER E-24031

NO.	REVISIONS	DATE	BY	APP.

SURVEYED BY: N/A DATE: N/A
DESIGNED BY: DEK DATE: 4/08
DRAWN BY: JDD, RDS DATE: 4/08
CHECKED BY: DEK DATE: 4/08
FIELD BOOK: N/A
DRAWING FILE: 508043.dwg
0 30 60
THIS BAR WILL MEASURE 1" WHEN PRINTED AT FULL SCALE.

SMITH & CO. ENGINEERS
A PUBLIC WORKS COMPANY
901 VINE STREET; P.O. BOX 72
ROLLA, MISSOURI 65402
(573) 785-9621 FAX: (573) 785-2651
WWW.SHSMITHCO.COM

ONSITE WASTEWATER TREATMENT SYSTEM
1601 RTE. E,POTOSI,WASHINGTON COUNTY,MO.

DRIP IRRIGATION SYSTEM
TYPICAL DETAILS AND TABLE

JOB #: 508043
DRAWING #: 3135
SHEET: 2

P:\Testing\508043 MoDOT 9-MO-Potosi Road OWTS-OWTS\Drawings\508043.dwg
4/29/2008 2:55 PM

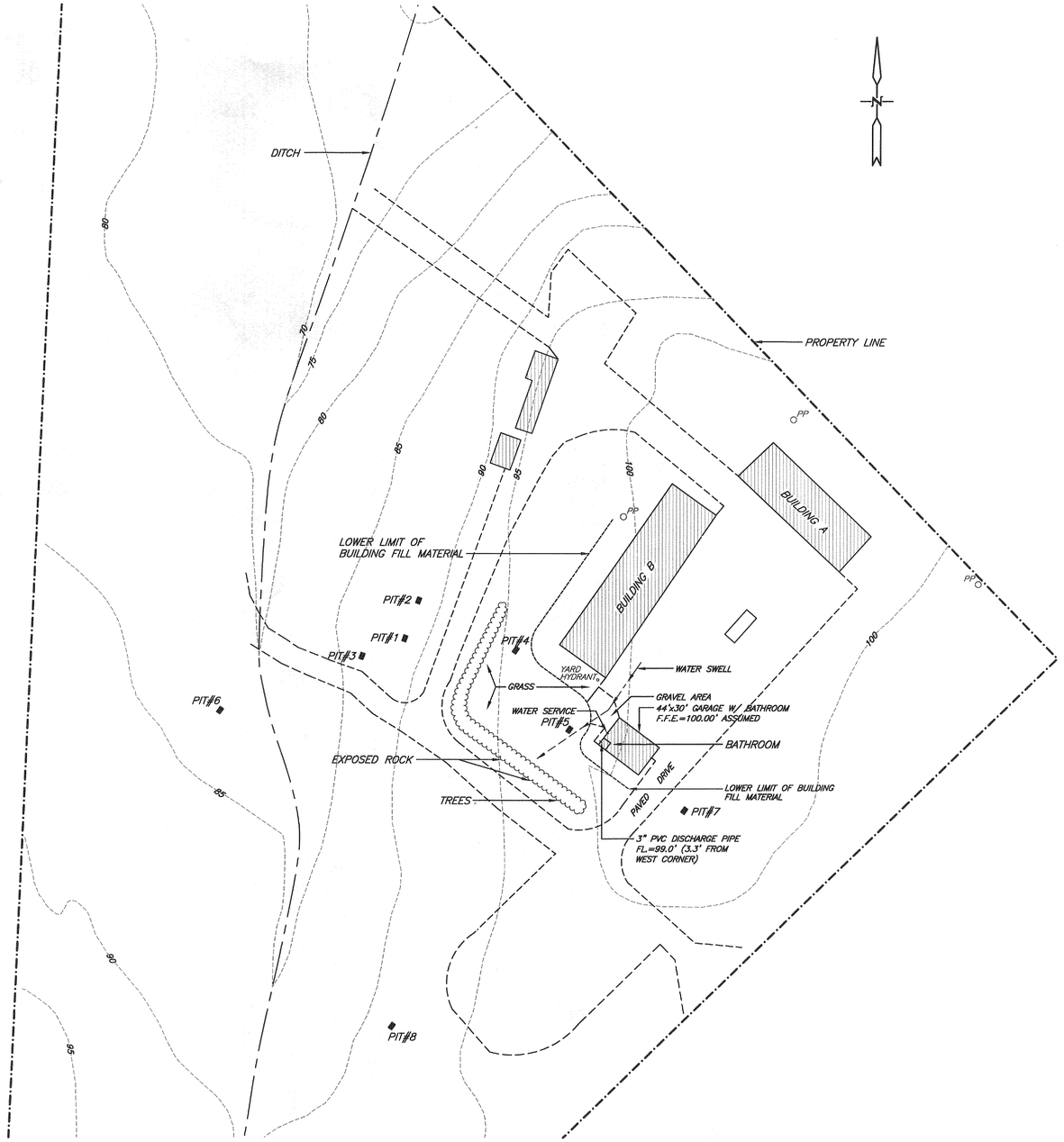

EXISTING SITE PLAN

0 60 120
(IN FEET)

NOTE:
THE TOP OF ROCK WAS FROM 2' TO 4' DEEP IN THE TEST PITS. AREAS OF EXPOSED ROCK WERE NOTED.

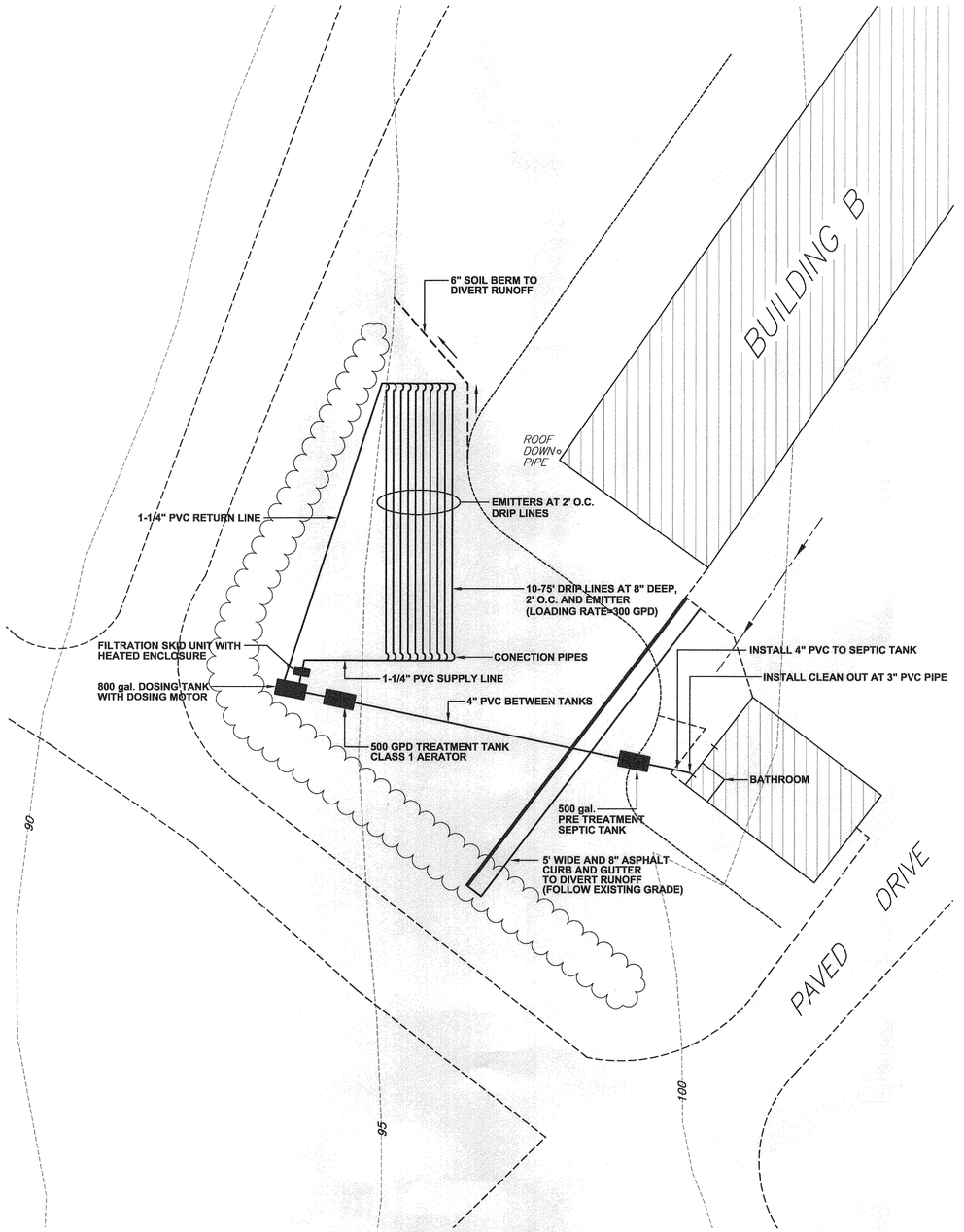

PROPOSED SITE PLAN - ONSITE WASTEWATER TREATMENT SYSTEM

0 20 40
(IN FEET)

NOTE:
SUPPLY ELECTRIC FROM THE GARAGE BUILDING TO THE TREATMENT TANK AND DOSING TANK.
SEE THE DRIP IRRIGATION SYSTEM STANDARD DETAIL FOR ADDITION DESIGN INFORMATION SPACING.

SEAL: STATE OF MISSOURI REGISTERED ENGINEER DAN E. KLAPROTH NUMBER E-24831

NO.	REVISIONS	DATE	BY	APP.

SURVEYED BY: N/A DATE: N/A
DESIGNED BY: DEK DATE: 4/08
DRAWN BY: JDO, RDS DATE: 4/08
CHECKED BY: DEK DATE: 4/08
FIELD BOOK: N/A
DRAWING FILE: 508043.dwg

0 30 60
THIS BAR WILL MEASURE 1" WHEN PRINTED AT FULL SCALE.

SMITH & CO. ENGINEERS
901 VINE STREET, P.O. BOX 72
POPLAR BLUFF, MISSOURI 63902
(573) 785-9621 FAX: (573) 785-2651 WWW.SHSMITHCO.COM

ONSITE WASTEWATER TREATMENT SYSTEM
1601 RTE. E, POTOSI, WASHINGTON COUNTY, MO.

SITE PLAN

JOB #: 508043
DRAWING #: 3135
SHEET: 1

P:\Testing\508043 MoDOT 2-MO-Potosi Shed GMTS-GMTS\Drawings\508043.dwg
4/29/2008 3:53 PM

SITE CLASSIFICATION for
ON-SITE SEWAGE SYSTEM – 19 CSR 20-3.060(2) & (7)

Owner: Missouri Department of Transportation Pit/Core #: P4 Date: 1-23-2008

Suitability See recommendations below S – Suitable; PS – Provisionally Suitable; U – Unsuitable; for conventional system.

S **LANDSCAPE POSITION:** upland / shoulder Slope aspect: Southwest

Flooding frequency: None ☒ Rare ☐ Occasional ☐ Frequent ☐ Surface depression(s) in evaluated area? ___

S **& TOPOGRAPHY** Percent Slope: 5% Slope Type: Uniform ☐ Complex ☒

Shape across (contour): linear Shape down (profile): linear

SOIL CHARACTERISTICS (See Profile Description for details)

PS **TEXTURE** to a depth of 41 inches Depth of unsuitable texture 24-48 inches (Rock)

PS **STRUCTURE** to a depth of 41 inches Depth of unsuitable structure 41 inches

S **SOIL DRAINAGE** Type of water table: NA Depth to water table >48 inches

S Surface drainage limitations: divert surface water Runoff slope length +200 feet

PS **SOIL THICKNESS** Depth of bedrock: 24-48 inches Rock outcrops? yes

PS **RESTRICTIVE HORIZON** Type: rock Depth: 24-48" Thickness: bedrock

S **AVAILABLE SPACE** Estimated space available: more than 10 acres

Adequate for a conventional system? NO an alternative system? yes replacement area? yes

OTHER FACTORS Note any environmental hazards: ___

High groundwater contamination potential? (If yes, indicate reason): ___

Sinkhole ☐ NO Rapid permeability ☒ Depth to highly permeable bedrock ☒ Fill material /depth ☐ 24-48" by building

PS **OVERALL** Notes: ___

Overall site classification will be determined by the lowest of the uncorrectable characteristics.

- **S** An overall site classification of **suitable** indicates soil and site conditions favorable for the operation of a conventional absorption system.
- **PS** Sites classified as **provisionally suitable** require some modifications and careful planning, design, and installation for a conventional system or alternative system to function satisfactorily.
- **U** Sites originally classified as **unsuitable** may possibly be reclassified as **provisionally suitable** according to subsection (7)(K).
- An **unsuitable** site may be used for soil absorption systems, provided engineering, hydrogeologic and soil studies indicate to the administrative authority that a conventional or alternative system could be expected to function satisfactorily. These sites may be reclassified as **provisionally suitable** upon meeting the requirements of the administrative authority according to subsection (6)(K).

Recommendations* associated with Provisionally Suitable or Unsuitable classifications:

___ Trenches must not be dug when wet to prevent damaging soil/trench surfaces.

Yes Surface water diversion is needed. Divert at Fill material + between buildings.

___ An interceptor drain should be installed upslope at a depth of ___ inches.

___ Shallow or modified shallow placed trenches should be installed at a depth of ___ inches.

Yes An alternative/engineered system is needed to overcome site limitations. Drip Irrigation

Install Drip Irrigation with drip lines in grasses area between buildings and tree line.

Owner: Missouri Department of Transportion Date 1-23-2008

Comments/Recommendations

Install Drip Irrigation Alternative System, Divert runoff water.

*Recommendations are to assist the property owner, and their agents in complying with the standards, and are subject to approval by the administrative authority.

I, the undersigned, hereby certify that the site evaluation was made in accordance with the requirements of Sections 701.025-701.059 RSMo and 19 CSR 20-3.060 and 19 CSR 20-3.080, and that the data recorded is correct to the best of my knowledge.

Dan Klaproth, #10090 (Print name) Dan Klaproth (Signature) 2-27-2008 (Date)

Important Recommendations for Installers and Homeowners:

Protect the absorption area before and after construction. Do not drive over or store excavated materials on field area etc.

Shallow placed absorption systems utilize more permeable and better-aerated soil horizons.

Do not install soil absorption system when soil is wet.

Redirect surface water, house guttering, and foundation drains away from absorption field.

Establish & maintain adequate vegetative cover over the field.

Regularly inspect, maintain, and pump your sewage system.

Install water saving devices & practice water conservation.

Check for and repair any water leaks as soon as discovered.

Spread out water use, such as laundry, throughout the week.

Restrict garbage disposal use.

Do not put fats or grease into the sewage system.

Keep chemicals and hazardous wastes out of your system.

Use disinfectants and high strength cleaners sparingly.

Do not plan any building improvements, patios, etc. near the sewage system or repair area.

Minimum Set-Back Distances
Based on **19 CSR 20-3.060(1)(D) Table 1**
[See also (6)(D) for lagoons]

Minimum Distance from	Sewage Tank (feet)	Disposal Area (feet)	Lagoons (feet)
Private water supply well	50	100	100
Public water supply well	300	300	300
Cistern	25	25	25
Spring	50	100	100
Classified stream or lake	50	50	50
Stream or open ditch	25	25	25
Property lines	10	10**	75
Building foundation	5	15	[100]
Basement	15	25	[100]
Swimming pool	15	15	
Pressure water line	10	10	10
Suction water line	50	100	100
Upslope interceptor drain	-	10	
Downslope interceptor drain	-	25	
Embankment or cuts	-	20	
Edge of sink holes	50	100	500
Other absorption system	-	20	20

**Recommend 25 feet from downslope property line.

(Rev 4/11/03)

OFFICIAL USE - APPLICATION # _____

SITE EVALUATION for ON-SITE SEWAGE SYSTEM

Property Owner: Missouri Department of Transportation		Date: 1-23-2008	
Site Address: 1601 Hwy E		Mailing Address: 3956 E Main Street	
Potosi , MO		Willow Springs, MO 65793	
Subdivision, Lot: MoDOT		Day(417) 469-9061	Evening(417) 252-6960
County: Washington	Legal Location: 1/4 1/4 1/4 ,S ,T ,R		
Residence - # Bedrooms:	# People	Latitude: 37°51'1.8 N	Longitude: -90°45' 21.2"W
Business - Type: Garage	Design flow: 300 gpd; System is: New [X]	Replacement [ ]	Repair [ ]

See enclosed 11"x17" drawing

Indicate North

SITE DIAGRAM

LEGEND

!

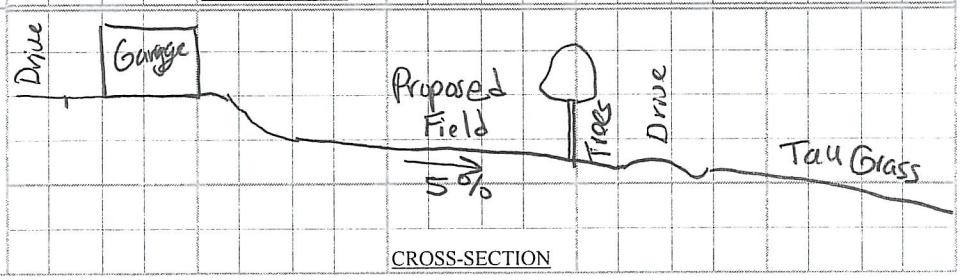

Site Diagram and Cross-Section : Show relative location of buildings, wells, roads, rock outcrops, depressions, sinkholes, location of soil observations, etc. Indicate the evaluated area(s) and direction of slope. (Property lines, easements, buried utilities, etc., are as observed, or as reported by property owner)

SOIL PROFILE DESCRIPTION

Owner: Missouri Department of Transportion Date: 1-23-2008

SOIL CHARACTERISTICS Excavation Depth: Pit (required for new installation) or Core #: 4

Vegetation: grass cover - mowed Parent Material:

Suitability (S, PS, U)	Horizon Designation	Horizon Depth / Boundary[1]	Munsell Color (moist)	Redoximorphic Features[2]	Texture USDA[3]	Texture % Clay	% Coarse Fragments by volume <3"	% Coarse Fragments by volume >3"	Consistence[4]	Structure[5]	Roots /Pores[6]	Shrink /Swell	Soil Group	Application Rate Conv. (Table 13)	Application Rate LPP (Table 14)
PS	A	0 7	2/1 10YR	-	Sil	15	0	0	Fr	1, F-m, GR	m, f-m m, F-m	-	III	.4	.3
PS	A	7 13	2/1 10YR	-	Sil	15	0	0	Fr	1, F-m, GR	m, f-m m, f-m	-	III	.4	.3
PS	AB	13 18	2/1 10YR	-	SiC	30	0	0	Fr	1, f-m, SBK 1, F, GR	m, f-m m, f-m	-	IVa	.3	.2
PS	Bt	18 25	4/6 10YR 3/2 10YR	-	VG C	60	5	35	Fi	2, F-m, SBK	c, vf-f m, f-m	low-mod	IVa	.2	.2
PS	Ct	25 34	5/6 10YR	4/3 10YR 2/1 10YR	SC VG	40	30	15	Fr	1, F-m, SBK 1, F, GR	F, vf m, vf-m	-	IVa	.3	.2
PS	Ct2	34 41	5/6 10YR	4/2 10YR	SC VG	40	30	15	Fr	1, F-m, SBK 1, F, GR	- m, vf-m	-	IVa	.3	.2
US	R	41			Rock									Rock	

Notes The rock depth varied from 24" to 48" in Pit #4. A total of eight pits were checked and the pits were similar to Pit-4. The rock depth in all pits ranged from 24" to 48". An alternative system is required. Per Washington DHSS, a drip irragation system is required.

Notations used on Soil Profile Description

(1) **Boundary** distinctness: A-abrupt, C-clear, G-gradual; topography: S-smooth, W-wavy, I-irregular;

(2) **Redox Features** Report low chroma Munsell colors and iron and manganese concentrations indicative of soil drainage limitations;

(3) **Texture** s-sand, ls-loamy sand, sl-sandy loam, l-loam, sil-silt loam, si-silt, scl-sandy clay loam, cl-clay loam, sicl-silty clay loam, sc-sandy clay, sic-silty clay, c-clay; Designate estimated clay content for all horizons;

(4) **Consistence** (report moist consistence) moist: fr-friable, fi-firm, vfi-very firm; wet: ss-slightly sticky, s-sticky, vs-very sticky and sp-slightly plastic, p-plastic, vp-very plastic; dry: sh-slightly hard, h-hard, vh-very hard;

(5) **Structure** grade: 1-weak, 2-moderate, 3-strong; size: f-fine (thin if platy), m-medium, c-coarse (thick if platy); shape: ABK-angular blocky, SBK-subangular blocky, GR-granular, PL-platy, PR prismatic, MA-massive;

(6) **Roots/Pores** abundance: f-few, c-common, m-many; size: vf-very fine, f-fine, m-medium, c-coarse.

DITCH

North

PROPERTY LINE

70
75
80
85
90
95
100

PP

BUILDING A

BUILDING B

LOWER LIMIT OF
BUILDING FILL MATERIAL

PIT#2

PIT#1

PIT#3

PIT#4

PIT#5

PIT#6

PIT#7

PIT#8

YARD
HYDRANT

WATER SWELL

GRASS

GRAVEL AREA

WATER SERVICE

44'x30' GARAGE W/ BATHROOM
F.F.E.=100.00' ASSUMED

BATHROOM

EXPOSED ROCK

DRIVE

PAVED

LOWER LIMIT OF BUILDING
FILL MATERIAL

TREES

3" PVC DISCHARGE PIPE
FL.=99.0' (3.3' FROM
WEST CORNER)

Highway E

EXISTING SITE PLAN

0 60 120

(IN FEET)