MISSOURI DEPARTMENT OF TRANSPORTATION
INFORMAL QUOTE GUIDELINES AND DOCUMENTATION

REQUEST FOR QUOTATION

It is the vendor's responsibility to read and comply with all conditions, specifications, and instructions outlined in this document. This document and any subsequent attachments shall supersede all confirmation forms, receipts, or any other paperwork needed to secure materials, equipment, or services.

TODAY'S DATE: JUNE 24, 2009	**QUOTE DUE BY (DATE AND TIME):** JUNE 29, 2009 @ 1:00 PM CENTRAL TIME	F.O.B. REQUIREMENTS: DESTINATION (SEE DELIVERY LOCATION BELOW)
TO BE DELIVERED BY: SPECIFY YOUR DELIVERY TIME IN THE SPACES BELOW.	**QUOTATION # D209-090-R2** THIS QUOTATION # SHOULD BE REFERENCED ON ALL MAILING LABELS, ENVELOPES, AND ANY OTHER CORRESPONDENCE.	BUYER NAME: WILLIAM D. "BILL" NOYES, CPPO, CPPB SENIOR PROCUREMENT AGENT PHONE NUMBER: (660)-385-8245 **FAX: (660)-385-1707**

Mailing Address: **(RFQ responses may be faxed)** Missouri Department of Transportation – District 2 General Services (Procurement) Division 902 North Missouri Street P.O. Box 8 Macon, MO. 63552	Delivery Location: Missouri Department of Transportation – District 2 General Services Stockroom 902 North Missouri Street Macon, MO. 63552

ALL QUOTES SHOULD BE EXTENDED & TOTALED. DELIVERY TIME SHOULD BE LISTED

Qty	U/M	**FLEXIBLE DELINEATORS meeting the specifications detailed on page 3**	UNIT PRICE	UNIT PRICE EXTENSION	DELIVERY TIME
345	EA	Flexible Guardrail Delineators: Single White	$	$	
40	EA	Flexible Guardrail Delineators: Single Yellow	$	$	
10	EA	Flexible Guardrail Delineators: White/Red	$	$	
940	EA	Flexible Guardrail Delineators: White/White	$	$	
30	EA	Flexible Barrier Wall Delineators: Single White	$	$	
50	EA	Flexible Barrier Wall Delineators: Single Yellow	$	$	
980	EA	Flexible Barrier Wall Delineators: White/White	$	$	
30	EA	Flexible Barrier Wall Delineators: Yellow/Yellow	$	$	
TOTAL ORDER EXTENSION:				$	

F.O.B. - Destination
Freight/Delivery costs must be included in the unit prices quoted and not listed as a separate line item.

Award
Award of this quote will be made on an "All Or Nothing" basis using the "lowest and best" principle of award.

Certificate of Good Standing
The Bidder must be in compliance with the laws regarding conducting business in the State of Missouri. Within ten (10) business days of notification, the Bidder will need to provide a copy of his/her Missouri Secretary of State's "Certificate of Good Standing" prior to the issuance of any contract or initial purchase order by the Missouri Department of Transportation (MoDOT). MoDOT reserves the right, at its sole discretion, to extend the date this documentation must be provided. Inability to provide this documentation when requested will result in bid rejection.

RsMO 34.040.6 Compliance
The Bidder must be in compliance with the laws regarding conducting business in the State of Missouri. The Bidder should ensure they are in good standing with the Missouri Department of Revenue. Prior to award MoDOT staff will check with the Missouri Department of Revenue to ensure compliance with the provisions of RsMO 34.040.6. If necessary a "Certificate of No Tax Due" may be requested of the successful Bidder. If such a certificate is requested, the Bidder's inability to provide this documentation will result in his/her bid being rejected.

VENDOR NAME:
(Please enter your company name in this block)

PREFERENCE IN PURCHASING PRODUCTS

DATE: _____

The bidders attention is directed to Section 34.076 RsMO 1986 which gives preference to Missouri corporations, firms, and individuals when letting contracts or purchasing products.

Bids/Quotations received will be evaluated on the basis of this legislation.

All vendors submitting a bid/quotation must furnish ALL information requested below.

FOR CORPORATIONS:

State in which incorporated: _____

FOR OTHERS:

State of domicile: _____

FOR ALL VENDORS:

List address of Missouri offices or places of business:

_____

_____

_____

_____

_____

_____

_____

THIS SECTION MUST BE COMPLETED AND SIGNED:

FIRM NAME: _____

ADDRESS: _____

CITY: _____ **STATE:** _____ **ZIP:** _____

BY (signature required): _____

Federal Tax I.D. #: _____ **if no Federal Tax I.D. # - list Social Security #:** _____

NOTE: For bid/quotation to be considered, the "Preference in Purchasing Products" form must be on file in the General Services (Procurement) Division and must be dated in the current calendar year.

Required Specifications

All materials must comply with the attached MoDOT Specification #'s MGS-06-03A (Guardrail Delineators) and MGS-06-02A (Barrier Wall Delineators) in regards to retro-reflective sheeting, certification, etc. **EXCEPT**, we are allowing slight variances in the dimensions outlined in these specifications. Overall dimensions for the delineators quoted and the amount of reflective surface(s) should be sized comparably to those in the MoDOT specifications above and/or the sample types referenced below. **We require these delineators have a flexible body style, with a built in urethane hinge (with UV-inhibitor) for impact resistance and longer service life**.

To meet this requirement, MoDOT District 2 has pre-approved the brands/types listed herein. Vendors should submit quotations for delineators **equal or comparable to** either the Filtrona Extrusion PCBM-T12 Barrier Wall Marker and U-Flex 24 Guardrail Marker or the Artuk Flex-Tab FT34 and Flex-Rail FR64.

If quoting other than these brands/types of delineators, you must submit specification sheets on the brand/type of delineator you are quoting along with your response to the Request For Quotation.

Specify the brand/type of delineators you are quoting:

Guardrail Delineators		Barrier Wall Delineators	
Brand/Type:		Brand/Type:	

VENDOR NOTES

VENDORS MAY ALSO ATTACH OTHER PERTINENT OR SUPPORTING DATA WITH THEIR RESPONSE TO THIS RFQ.

Missouri Department of Transportation purchase orders must be issued to the invoicing company/address. If the invoicing company/address will be different from that listed in the vendor information section (below), the vendor should specify the "remit to" company/address in the vendor notes section (above).

VENDOR INFORMATION

Vendor Name/Mailing Address: Email Address:	Vendor Contact Information (including area codes): Phone #: Cellular #: Fax #:
Printed Name and Title of Responsible Officer or Employee:	Signature:

Is your company registered/certified with the State of Missouri as a (please circle):

MINORITY BUSINESS ENTERPRISE (MBE) ?	YES	NO
WOMEN BUSINESS ENTERPRISE (WBE) ?	YES	NO

If you would like information about MBE/WBE certification, please contact the Officer of Supplier of Workforce Diversity by calling 1-877-259-2963 or visit the following internet address: http://www.oswd.mo.gov

Is your company a MISSOURI SERVICE-DISABLED VETERAN BUSINESS? YES NO

A service-disabled veteran is defined as any individual who is disabled as certified by the appropriate federal agency responsible for the administration of veteran's affairs. A service-disabled veteran business is defined as a business concern:

- not less than fifty-one (51) percent of which is owned by one or more service-disabled veterans or, in the case of publicly owned businesses, not less than fifty-one (51) percent of the stock of which is owned by one or more service-disabled veterans; and
- the management and daily business operations of which are controlled by one or more service-disabled veterans.

All responses to this Request For Quotation should be submitted on this form and pages 1 thru 3 should be returned to the Buyer listed above at the District mailing address or fax number shown.

Note: If any of the "Standard Solicitation Provisions" and "General Terms and Conditions" on the following pages conflict with the requirements outlined in this Request For Quotation, the RFQ requirements will supersede those below.

STANDARD SOLICITATION PROVISIONS

a. The Missouri Department of Transportation (MoDOT) reserves the right to reject any or all bids/quotes/proposals, and to accept or reject any items thereon, and to waive technicalities. In case of error in the extension of prices in the bid/quote/proposal, unit prices will govern.

b. All bids/quotes/proposals must be signed with the firm name and by a responsible officer or employee. Obligations assumed by such signature must be fulfilled.

c. By virtue of statutory authority, a preference will be given to materials, products, supplies, provisions and all other articles produced, manufactured, made or grown, within the State of Missouri.

d. Time of delivery is a part of the consideration and, if not otherwise stated in the solicitation documents, must be stated in definite terms by the Bidder/Offeror and must be adhered to. If time varies on different items, the Bidder/Offeror shall so state.

e. If providing bids/quotes/proposals for commodities, the Bidder/Offeror will state brand or make on each item. If bidding or proposing other than the make, model or brand specified, the manufacturer's name, model number or catalog number must be given.

f. **For bids/proposals of $25,000** or more, no bids/proposals by telephone, telegram or telefax will be accepted.

g. The date specified for the returning of bids/quotes/proposals is a firm deadline and all bids/quotes/proposals must be received at the designated office by that time. The Department does not recognize the U.S. Mail, Railway Express Agency, Air Express, or any other organization, as its agent for purposes of accepting proposals. All proposals arriving at the designated office after the deadline specified will be rejected.

GENERAL TERMS AND CONDITIONS

General Performance

a. This work is to be performed under the general supervision and direction of the Missouri Department of Transportation (MoDOT) and, if awarded any portion of the work, the Contractor agrees to furnish at his own expense all labor and equipment required to complete the work, it being expressly understood that this solicitation is for completed work based upon the price(s) specified and is not a solicitation for rental of equipment or employment of labor by MoDOT, and MoDOT is to have no direction or control over the employees used by the Contractor in performance of the work.

Deliveries

a. Unless otherwise specified on the solicitation documents or purchase order, suppliers shall give at least 24 hours advance notice of each delivery. Delivery will only be received between the hours of 8:00 a.m. to 3:00 p.m., Monday through Friday. Material arriving after 3:00 p.m. will not be unloaded until the following workday. No material will be received on Saturday, Sunday or state holidays.

b. If the prices bid herein include the delivery cost of the material, the Contractor agrees to pay all transportation charges on the material as FOB - Destination. Freight costs must be included in the unit price bid and not listed as a separate line item.

c. Any demurrage is to be paid by the Contractor direct to the railroad or carrier.

Nondiscrimination

a. The Contractor shall comply with the Regulations relative to nondiscrimination in federally-assisted programs of the Department of Transportation, Title 49, Code of Federal Regulations, Part 21, as they may be amended from time to time, (hereinafter referred to as the Regulations), which are herein incorporated by reference and made a part of this contract.

b. All solicitations either by competitive bidding or negotiation made by the Contractor for work to be performed under a subcontract, including procurements of materials or leases of the Contractor's obligations under this contract and the Regulations, will be relative to nondiscrimination on the grounds of race, color, or national origin.

   1) Sanctions for Noncompliance: In the event of the Contractor's noncompliance with the nondiscrimination provisions of this contract, MoDOT shall impose such contract sanctions as it or the Federal Highway Administration may determine to be appropriate, including, but not limited to:

      i. withholding of payments to the Contractor under the contract until the Contractor complies, and/or,

      ii. cancellation, termination or suspension of the contract, in whole or in part.

Contract/Purchase Order

a. By submitting a bid/quote/proposal, the Bidder/Offeror agrees to furnish any and all equipment, supplies and/or services specified in the solicitation documents, at the prices quoted, pursuant to all requirements and specifications contained therein.

b. A binding contract shall consist of: (1) the solicitation documents, amendments thereto, and/or Best and Final Offer (BAFO) request(s) with any changes/additions, (2) the Contractor's proposal and/or submitted pricing, and (3) the MHTC's acceptance of the proposal and/or bid by purchase order or post-award contract.

c. A notice of award does not constitute an authorization for shipment of equipment or supplies or a directive to proceed with services. Before providing equipment, supplies and/or services, the Contractor must receive a properly authorized purchase order and/or notice to proceed.

d. The contract expresses the complete agreement of the parties and performance shall be governed solely by the specifications and requirements contained therein. Any change, whether by modification and/or supplementation, must be accomplished by a formal contract amendment signed and approved by and between the duly authorized representative of the Contractor and the duly authorized representative of the MHTC, by a modified purchase order prior to the effective date of such modification. The Contractor expressly and explicitly understands and agrees that no other method and/or no other document, including correspondence, acts, and oral communications by or from any person, shall be used or construed as an amendment or modification.

Subcontracting

a. It is specifically understood that no portion of the material or any interest in the contract, shall be subcontracted, transferred, assigned or otherwise disposed of, except with the written consent of MoDOT. Request for permission to subcontract or otherwise dispose of any part of the work shall be in writing to MoDOT and accompanied by documentation showing that the organization which will perform the work is particularly experienced and equipped for such work.

b. Consent to subcontract or otherwise dispose of any portion of the work shall not be construed to relieve the Contractor of any responsibility for the production and delivery of the contracted work and the completion of the work within the specified time.

c. All payments for work performed by a subcontractor shall be made to the Contractor to whom the contract was awarded and the purchase order issued.

Invoicing and Payment

a. MoDOT is exempt from paying Missouri Sales Tax, Missouri Use Tax and Federal Excise Tax. However, the Contractor may themselves be responsible for the payment of taxes on materials they purchase to fulfill the contract. A Project Tax Exemption Certificate will be furnished to the successful Bidder/Offeror upon request if applicable.

b. Each invoice should be itemized in accordance with items listed on the purchase order and/or contract. The statewide financial management system has been designed to capture certain receipt and payment information. Therefore, each invoice submitted must reference the purchase order number and must be itemized in accordance with items listed on the purchase order. Failure to comply with this requirement may delay processing of invoices for payment.

c. Unless otherwise provided for in the solicitation documents, payment for all equipment, supplies, and/or services required herein shall be made in arrears. The Missouri Highways and Transportation Commission (MHTC) shall not make any advance deposits.

d. The MHTC assumes no obligation for equipment, supplies, and/or services shipped or provided in excess of the quantity ordered. Any authorized quantity is subject to the MHTC's rejection and shall be returned at the Contractor's expense.

e. The MHTC reserves the right to purchase goods and services using the state-purchasing card.

Applicable Laws and Regulations

a. The contract shall be construed according to the laws of the State of Missouri. The Contractor shall comply with all local, state, and federal laws and regulations related to the performance of the contract.

b. The Contractor must be registered and maintain good standing with the Secretary of State of the State of Missouri and other regulatory agencies, as may be required by law or regulations. Prior to the issuance of a purchase order and/or notice to proceed, the Contractor may be required to submit to MoDOT a copy of their current Authority Certificate from the Secretary of State of the State of Missouri.

   1) Prior to the issuance of a purchase order and/or notice to proceed, all **out-of-state** Contractors **providing services** within the state of Missouri must submit to MoDOT a copy of their current Transient Employer Certificate from the Department of Revenue, in addition to a copy of their current Authority Certificate from the Secretary of State of the State of Missouri.

c. The exclusive venue for any legal proceeding relating to or arising, out of the contract shall be in the Circuit Court of Cole County, Missouri.

d. Pursuant to RSMo 285.530 (1), no business entity or employer shall knowingly employ, hire for employment, or continue to employ an unauthorized alien to perform work within the state of Missouri. As a condition for the award of any contract or grant in excess of five thousand dollars by the state or by any political subdivision of the state to a business entity, or for any business entity receiving a state-administered or subsidized tax credit, tax abatement, or loan from the state, the business entity shall, by sworn affidavit and provision of documentation, affirm its enrollment and participation in a federal work authorization program with respect to the employees working in connection with the contracted services. Every such business entity shall sign an affidavit affirming that it does not knowingly employ any

person who is unauthorized alien in connection with the contracted services. [RSMO 285.530 (2)] A copy of the affidavit referenced above is provided within this document.

Executive Order

a. The Contractor shall comply with all the provisions of Executive Order 07-13, issued by the Honorable Matt Blunt, Governor of Missouri, on the sixth (6th) day of March, 2007. This Executive Order, which promulgates the State of Missouri's position to not tolerate persons who contract with the state engaging in or supporting illegal activities of employing individuals who are not eligible to work in the United States, is incorporated herein by reference and made a part of this Agreement.

   1) "By signing this Agreement, the Contractor hereby certifies that any employee of the Contractor assigned to perform services under the contract is eligible and authorized to work in the United States in compliance with federal law."

   2) In the event the Contractor fails to comply with the provisions of the Executive Order 07-13, or in the event the Commission has reasonable cause to believe that the contractor has knowingly employed individuals who are not eligible to work in the United States in violation of federal law, the Commission reserves the right to impose such contract sanctions as it may determine to be appropriate, including but not limited to contract cancellation, termination or suspension in whole or in part or both.

   3) The Contractor shall include the provisions of this paragraph in every subcontract. The Contractor shall take such action with respect to any subcontract as the Commission may direct as a means of enforcing such provisions, including sanctions for noncompliance.

Preferences

a. In the evaluation of bids/quotes/proposals, preferences shall be applied in accordance with Chapter 34 RSMo. Contractors should apply the same preferences in selecting subcontractors.

b. By virtue of statutory authority, RSMo. 34.076 and 34.350 to 34.359, a preference will be given to materials, products, supplies, provisions and all other articles produced, manufactured, made or grown within the State of Missouri. Such preference shall be given when quality is equal or better and delivered price is the same or less.

   1) If attached, the document entitled **"PREFERENCE IN PURCHASING PRODUCTS"** should be completed and returned with the solicitation documents.

   2) If attached, the document entitled **"MISSOURI DOMESTIC PRODUCTS PROCUREMENT ACT"** should be completed and returned with the solicitation documents. **Applies if bid is Twenty-Five Thousand Dollars ($25,000.00) or more.**

c. By virtue of statutory authority, RSMo 34.074, a preference will be given all contracts for the performance of any job or service to service-disabled veteran business either doing business as Missouri firms, corporations, or individuals; or which maintain Missouri offices or places of business, when the quality of performance promised is equal or better and the price quoted is the same or less or whenever competing bids, in their entirety, are comparable.

   1) If attached, the document entitled **"MISSOURI SERVICE-DISABLED VETERAN PREFERENCE"** should be completed and returned with the solicitation documents.

d. In the event of a tie of low bids, the MHTC reserves the right to establish the method to be used in determining the award

Remedies and Rights

a. No provision in the contract shall be construed, expressly or implied, as a waiver by the MHTC of any existing or future right and/or remedy available by law in the event of any claim by the MHTC of the Contractor's default or breach of contract.

b. The Contractor agrees and understands that the contract shall constitute an assignment by the Contractor to the MHTC of all rights, title and interest in and to all causes of action that the Contractor may have under the antitrust laws of the United States or State of Missouri for which causes of action have accrued or will accrue as the result of or in relation to the particular equipment, supplies, and/or services purchased or produced by the Contractor in the fulfillment of the contract with the MHTC.

c. In the event a Contractor becomes involved in, or is threatened with, litigation with a subcontractor or supplier as a result of such direction, the Contractor may request MoDOT to enter into such litigation to protect the interests of the MHTC, and, in addition, the Contractor may request the United States to enter into such litigation to protect the interests of the United States.

Cancellation of Contract

a. The MHTC may cancel the contract at any time for a material breach of contractual obligations or for convenience by providing the Contractor with written notice of cancellation. Should the MHTC exercise its right to cancel the contract for such reasons, cancellation will become effective upon the date specified in the notice of cancellation sent to the Contractor.

b. If the MHTC cancels the contract for breach, the MHTC reserves the right to obtain the equipment, supplies, and/or services to be provided pursuant to the contract from other sources and upon such terms and in such manner as the MHTC deems appropriate and charge the Contractor for any additional costs incurred thereby.

Bankruptcy or Insolvency

a. Upon filing for any bankruptcy or insolvency proceeding by or against the Contractor, whether voluntary or involuntary, or upon the appointment of a receiver, trustee, or assigned the benefit or creditors, the Contractor must notify MoDOT immediately. Upon learning of any such actions, the MHTC reserves the right, at its sole discretion, to either cancel the contract or affirm the contract and hold the Contractor responsible for damages.

Inventions, Patents, and Copyrights

a. The Contractor shall defend, protect, and hold harmless the MHTC, its officers, agents, and employees against all suits of law or in equity resulting from patent and copyright infringement concerning the Contractor's performance or products produced under the terms of the contract.

Inspection and Acceptance

a. No equipment, supplies, and/or services received by MoDOT pursuant to a contract shall be deemed accepted until MoDOT has had reasonable opportunity to inspect said equipment, supplies, and/or services.

b. All equipment, supplies, and/or services which do not comply with the specifications and/or requirements or which are otherwise unacceptable or defective may be rejected. In addition, all equipment, supplies, and/or services which are discovered to be defective or which do not conform to any warranty of the Contractor upon inspection (or at any later time if the defects contained were not reasonably ascertainable upon the initial inspection) may be rejected.

c. The MHTC reserves the right to return any such rejected shipment at the Contractor's expense for full credit or replacement and to specify a reasonable date by which replacements must be received.

d. The MHTC's right to reject any unacceptable equipment, supplies, and/or services shall not exclude any other legal, equitable or contractual remedies the MHTC may have.

Warranty

a. The Contractor expressly warrants that all equipment, supplies, and/or services provided shall: (1) conform to each and every specification, drawing, sample or other description which was furnished to or adopted by MoDOT, (2) be fit and sufficient for the purpose expressed in the solicitation documents, (3) be merchantable, (4) be of good materials and workmanship, and (5) be free from defect.

b. Such warranty shall survive delivery and shall not be deemed waived either by reason of the MHTC's acceptance of or payment for said equipment, supplies, and/or services.

Status of Independent Contractor

a. The Contractor represents itself to be an independent Contractor offering such services to the general public and shall not represent itself or its employees to be an employee of the MHTC. Therefore, the Contractor shall assume all legal and financial responsibility for taxes, FICA, employee fringe benefits, workers' compensation, employee insurance, minimum wage requirements, overtime, etc., and agrees to indemnify, save and hold the MHTC, its officers, agents and employees harmless from and against any and all losses (including attorney fees) and damage of any kind related to such matters.

Indemnification

a. The Offeror shall defend, indemnify and hold harmless the Commission, including its members and department employees, from any claim or liability whether based on a claim for damages to real or personal property or to a person for any matter relating to or arising out of the Offeror's performance of its obligations under this Agreement.

(T&C's Version 1/21/09)

IF NOT SUBMITTING A QUOTE, PLEASE COMPLETE AND RETURN THE FOLLOWING "NO QUOTE FORM" TO ASSIST THE PROCUREMENT STAFF IN OUR PROCESS EVALUATIONS.

THANK YOU

NO QUOTE

DATE: _____

TO: Missouri Department of Transportation – District 2
General Services (Procurement) Division
902 North Missouri Street P.O. Box 8
Macon, MO. 63552
(660)-385-1707 – fax #

FROM: _____ (Company Name)

_____ (Mailing Address)

_____ (City, State, Zip Code)

_____ (Office Phone #)

_____ (Cellular Phone #)

_____ (Fax #)

Our company is submitting "NO QUOTE" on RFQ # _____ for the reason(s) indicated below:

( ) Product or service is not available or cannot meet the required specifications

( ) Other obligations – cannot make required deadline

( ) The delivery point or work location is outside of our territory or coverage/service area

( ) Other – Please explain below:

_____

_____

Contact Person: _____ Email Address: _____

( ) Please keep our name on the bidder's list for future opportunities on this product or service.
( ) Please remove our name from your bidder's list for this product or service.

FAILURE TO RETURN A QUOTE OR THIS FORM MAY RESULT IN REMOVAL FROM OUR VENDOR DATABASE FOR FUTURE OPPORTUNITIES

GUARDRAIL DELINEATORS MGS 06-03A

1.0 DESCRIPTION. This specification covers guardrail delineators

2.0 MATERIALS.

2.1 Delineator Body. The delineator shall have a flat, non-curved surface manufactured from a white, high impact, weather-resistant plastic.

2.2 Dimensions. The thickness of the body of the delineators shall be minimum of 0.08 inches. The length and width of the delineator shall be in accordance with the drawing. Two three-eighth inch holes shall be provided in accordance with the drawing.

2.3 Sheeting. Retro-reflective sheeting meeting MoDOT Type 7 sign standards, in accordance with section 1042, Highway Sign Material, of the Missouri Standard Specifications for Highway Construction manual, shall be used. The sheeting shall nominally be 4 inches wide by 6 inches tall and placed on the top half of the delineator body as shown in the attached drawing. Sheeting may be placed on one or both sides of the delineator body per the following table. Reflective sheeting having a datum mark on the surface shall be orientated vertically.

	Sheeting Color	
Delineator Description	**Front Side**	**Back Side**
Single White	White	NA
Single Yellow	Yellow	NA
White/ Red	White	Red
Yellow/ Red	Yellow	Red
White/ White	White	White
Yellow/ Yellow	Yellow	Yellow

3.0 ORDERING INFORMATION.

3.1 The quantity and color of delineators is to be as shown in the order.

4.0 CERTIFICATION.

4.1 The bidder must supply sample delineators and certifications during the bidding process. Material certification sheets indicating the manufacturer, color and series number of the reflective sheeting are required prior to award. One of each delineator color combination listed on the bid request must be submitted for review. Furnished samples must fully comply with the requirements of the specification prior to award. Failure to comply will remove the supplier from the bid process.

5.0 ACCEPTANCE.

5.1 Acceptance will be based on acceptable certifications and results of tests performed on the samples taken by the department at destination. The department may sample and test delineators at any time.

6.0 REJECTION.

6.1 If tests performed by the department indicate non-compliance with the requirements of this specification, the entire shipment will be rejected.

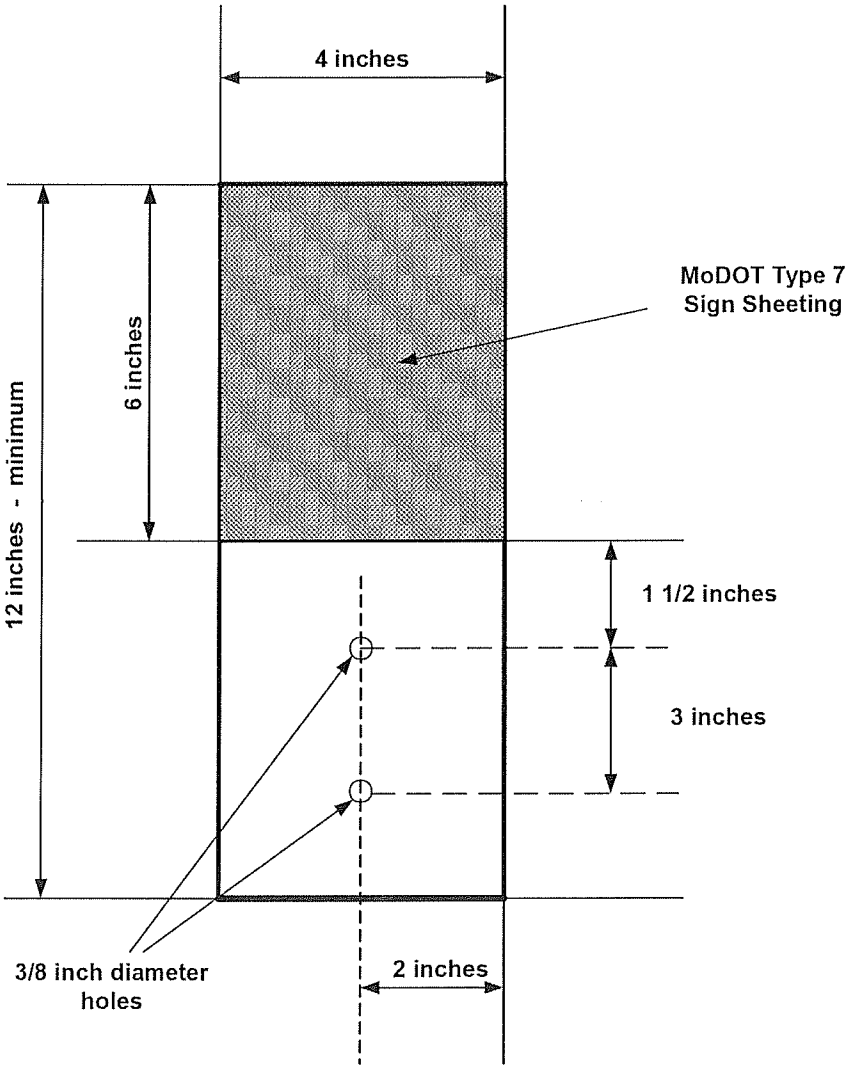

MoDOT Guardrail Delineator

BARRIER WALL DELINEATORS MGS 06-02A

1.0 DESCRIPTION. This specification covers barrier wall delineators

2.0 MATERIALS.

2.1 Delineator Body. The delineator shall be manufactured from a white, high impact, weather-resistant plastic, extruded as a single piece.

2.2 Dimensions. The thickness of the body of the delineators shall be minimum of 0.08 inches. The length and width of the delineator shall be in accordance with the drawing. Two one-quarter inch holes shall be provided in accordance with the attached drawing.

2.3 Sheeting. Retro-reflective sheeting meeting MoDOT Type 7 sign standards, in accordance with section 1042, Highway Sign Material, of the Missouri Standard Specifications for Highway Construction manual, shall be used. The sheeting shall nominally be 4 inches wide by 3 inches tall and placed on the delineator body as shown in the attached drawing. Sheeting may be placed on one or both sides of the delineator body per the following table. Reflective sheeting having a datum mark on the surface shall be orientated vertically.

	Sheeting Color	
Delineator Description	**Front Side**	**Back Side**
Single White	White	NA
Single Yellow	Yellow	NA
White/ Red	White	Red
Yellow/ Red	Yellow	Red
White/ White	White	White
Yellow/ Yellow	Yellow	Yellow

3.0 ORDERING INFORMATION

3.1 The quantity and color of delineators is to be as shown in the order.

4.0 CERTIFICATION

4.1 The bidder must supply sample delineators and certifications during the bidding process. Material certification sheets indicating the manufacturer, color and series number of the reflective sheeting are required prior to award. One of each delineator color combination listed on the bid request must be submitted for review. Furnished samples must fully comply with the requirements of the specification prior to award. Failure to provide any of the requested information will remove the supplier from the bid process.

5.0 ACCEPTANCE.

5.1 Acceptance will be based on acceptable certifications and results of tests performed on the samples taken by the department at destination. The department may sample and test delineators at any time.

6.0 REJECTION.

6.1 If tests performed by the department indicate non-compliance with the requirements of this specification, the entire shipment will be rejected.

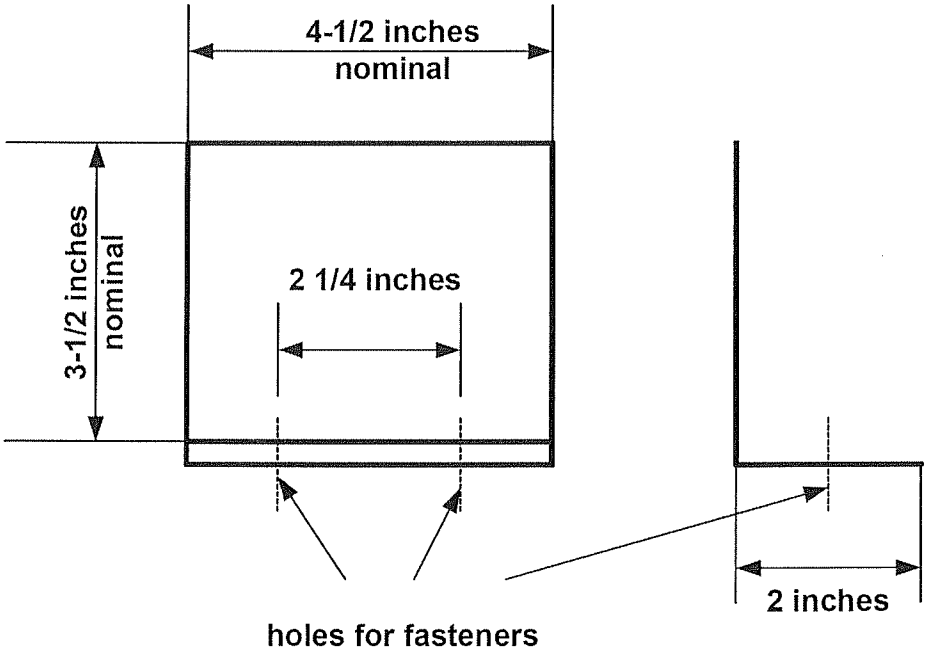

Delineator to have a minimum of 2 primary holes spaced as shown above. If additional holes are provided they shall be "in line" parallel to the face of the delineator

4 inch by 3 inch MoDOT Type 7 sign sheeting applied to either or both faces

MoDOT Barrier Wall Delineators