BID FORM

MISSOURI DEPARTMENT OF TRANSPORTATION
PROCUREMENT DEPARTMENT
3025 East Kearney Street
Springfield, MO 65803

REQUEST NO.	D8PP-11033		
DATE	February 24, 2011		
PAGE NO.	1	NO. OF PAGES	19

SEALED BIDS, SUBJECT TO THE ATTACHED CONDITIONS WILL BE RECEIVED AT THIS OFFICE UNTIL

1:00 p.m., Local Time, March 10, 2011

AND THEN PUBLICLY OPENED AND READ FOR FURNISHING THE FOLLOWING SUPPLIES OR SERVICES.

BIDS TO BE BASED F.O.B. MISSOURI DEPARTMENT OF TRANSPORTATION
Submit net bid as cash discount stipulations will not be considered
Buffalo, MO – Dallas County
Bolivar, MO – Polk County

DEFINITE DELIVERY DATE SHOULD BE SHOWN. THE BIDDER MUST SIGN AND RETURN BEFORE DATE AND TIME SET FOR OPENING.

BUYER: Andy McNeill, CPPB
BUYER EMAIL: Andrew.McNeill@modot.mo.gov
BUYER TELEPHONE: 417-895-7645

SUPPLIES OR SERVICES

POLE BARN ERECTION SERVICES

To establish a contract to furnish **"Pole Barn Erection"** with an effective date of the Notice to Proceed and ending 45 calendar days after the Notice to Proceed in accordance with the following pages.

Bidders are encouraged to obtain minority business enterprise (MBE) and women business enterprise (WBE) participation in this work through the use of subcontractors, suppliers, joint ventures, or other arrangements that afford meaningful participation for M/WBEs. Bidders are encouraged to obtain 10% MBE and 5% WBE participation.

Return sealed bid to the address shown at the top of this page.

(SEE ATTACHED FOR TERMS, CONDITIONS, AND INSTRUCTIONS)

In compliance with the above Request For Bid, and subject to all conditions thereof, the undersigned bidder agrees to furnish and deliver any or all the items on which prices were bid within the timeframe specified herein, after receipt of formal purchase order.

Date: _____
Telephone No.: _____
Fax No.: _____
Federal I.D. No. _____
Email Address: _____

Firm Name: _____
Address: _____
_____
By (Signature): _____
Type/Print Name _____
Title:

Is your firm MBE certified? ☐ Yes ☐ No
Is your firm WBE certified? ☐ Yes ☐ No

Form E-103 (Rev. 11-04)

1. INTRODUCTION AND GENERAL INFORMATION

1.1 Introduction:

1.1.1 This Request for Bid seeks bids from qualified organizations to provide Pole Barn Erection Services with an effective contract period of Notice to Proceed through 45 calendar days after the Notice to Proceed, to the Missouri Highways and Transportation Commission (MHTC) and Missouri Department of Transportation (MoDOT). Each bid must be mailed in a sealed envelope to Andy McNeill, Procurement Department,3025 East Kearney Street, Springfield, MO 65803, or hand-delivered in a sealed envelope to the Procurement Department Office in the Highway and Transportation Building at 3025 East Kearney Street, Springfield, Missouri. All questions regarding the RFB shall be submitted to Andy McNeill. Bids must be returned to the office of Andy McNeill no later than 1:00 p.m., CDT, March 10, 2011.

RFB Coordinator:

AndyMcNeill, Senior Procurement Agent
Missouri Department of Transportation
3025 East Kearney Street
Springfield, MO 65803

PHONE: 417-895-7645
FAX: 417-895-6704
EMAIL: Andrew.McNeill@modot.mo.gov

1.2 General Information:

1.2.1 This document constitutes an invitation for competitive, sealed bids for the procurement of Pole Barn Erection Services as set forth herein.

1.2.2 Organization - This document, referred to as a Request for Bid (RFB), is divided into the following parts:

1) Introduction and General Information

2) Scope of Work

3) Bid Submission

4) Pricing Page(s)

5) Signature Page(s)

6) Terms and Conditions

2. SCOPE OF WORK

2.1 General Requirements:

2.1.1 The contractor shall provide Pole Barn Erection Services on an as needed, if needed basis for the Missouri Highway and Transportation Commission (MHTC) and Missouri Department of Transportation (MoDOT), in accordance with the provisions and requirements stated herein.

2.1.2 The contractor shall provide all deliverables/services to the sole satisfaction of MoDOT.

2.1.3 MoDOT estimates, but does not guarantee, the purchase of the services stated herein.

2.1.4 MoDOT reserves the right to obtain "like or similar" products as specified herein from other manufacturers, exclusive of the contract, when use of such products is deemed in the best interest of MoDOT.

2.1.5 Unless otherwise specified herein, the contractor shall furnish all material, labor, facilities, equipment, and supplies necessary to provide the deliverables/services required herein.

2.2 Specific Requirements:

2.2.1 The contractor shall provide MoDOT with Pole Barn Erection Services, in accordance with the following.

2.2.2 This project involves erection of a MoDOT supplied pole barn, built to the specifications listed on the attached plans and built to the standards as designed.

2.2.3 **MoDOT Supplied Materials -** MoDOT will supply the following items: Pole barn as shown in plans including lumber, roof and wall metal, all necessary fasteners including nails, roof and wall metal screws, truss tie plates, electricity for tools, ready mix cement for post footings, and disposal of excess construction materials. MoDOT will provide site preparation.

2.2.3 **Contractor Supplied Equipment –** Contractor shall provide all necessary labor to erect the MoDOT supplied building as per the design plans. Contractor to provide soil drilling for post placement. Contractor shall provide any applicable equipment for raising and setting posts, lifting trusses and installing metal. MoDOT will not provide any direct compensation for equipment that contractor may need during the construction process. Contractor is responsible for any cutting blades, drive tools/bits necessary for construction.

2.2.4 Contractor may store equipment and tools on jobsite in a contractor supplied storage container or job trailer. All security features of storage facilities shall the responsibility of the contractor. MoDOT will not be responsible for lost or stolen equipment or tools.

2.2.5 Contractor may supply portable restroom facilities for employees from a certified portable restroom vendor. Contractor will be responsible for routine cleaning and pumping. Any discharges or spills by contractor or restroom vendor will be the responsibility of the contractor. Any environmental remediation from spills will be at the expense of the contractor.

2.2.6 MoDOT will supply overhead doors at a later date. This project does not involve overhead door installation.

2.3 Delivery Requirements:

2.3.1 The contractor shall deliver the service specified herein to the following MoDOT locations:

a. Buffalo Maintenance Facility (New Lot), 1732 N. Ash Street, Buffalo, Missouri 65622 – Dallas County
b. Bolivar Maintenance Facility, 2816 W. Broadway, Bolivar, Missouri 65613 – Polk County

2.3.2 This project shall allow 45 calendar days for construction from date of award.

2.4 Liquidated Damage Requirements:

2.4.1 The contractor shall agree and understand that providing the Pole Barn Erection Services in accordance with the requirements stated herein is considered critical to the efficient operations of MoDOT. However, since the amount of actual damages would be difficult to establish in the event the contractor fails to comply with the contractual requirements, the contractor shall agree and understand that the amount identified below as liquidated damages shall be reasonable and fair under the circumstances.

a. In the event the contractor fails to provide the Pole Barn Erection Services in accordance with the contractual requirements specified herein, the contractor shall be assessed liquidated damages in the amount of $100.00 per day for each such delinquent day.

b. The contractor shall further agree and understand that such liquidated damages shall either be deducted from the total amount due the contractor or paid by the contractor as a direct payment to MoDOT, at the sole discretion of MoDOT.

c. The contractor shall agree and understand that the liquidated damages described herein shall not be construed as a penalty.

d. The contractor shall agree and understand that all assessments of liquidated damages shall be within the discretion of the MoDOT and shall be in addition to, not in lieu of, the rights of the MoDOT to pursue other appropriate remedies.

e. The contractor shall agree and understand that all assessments of liquidated damages shall be within the discretion of each District as a separate entity, and shall be in addition to, not in lieu of, the rights of the MoDOT to pursue other appropriate remedies. The contractor shall agree and understand that each District's decision shall be individual, final, and without recourse.

f. The contractor shall agree and understand that if a product(s) is rejected due to not meeting specifications, all cost associated with returning the product to the contractor shall be paid by the contractor, at no additional cost to MoDOT.

2.5 Invoicing and Payment Requirements:

2.5.1 The contractor shall submit an itemized invoice to the applicable requesting address for the completion of deliverables, as specified herein.

2.5.2 The contractor shall be paid in accordance with the firm, fixed prices stated on the pricing page of this document after completion of deliverables specified herein and acceptance by MoDOT.

2.5.3 Other than the payment specified above, no other payments or reimbursements shall be made to the contractor for any reason whatsoever.

2.5.4 MoDOT is exempt from paying Missouri Sales Tax, Missouri Use Tax and Federal Excise Tax. However, the contractor may themselves be responsible for the payment of taxes on materials they purchase to fulfill the contract. A Federal Excise Tax Exemption Certificate will be furnished to the successful bidder upon request.

2.5.5 Unless otherwise provided for in the solicitation documents, payment for all equipment, supplies, and/or services required herein shall be made in arrears. The Missouri Highways and Transportation Commission (MHTC) shall not make any advance deposits.

2.5.6 The MHTC assumes no obligation for equipment, supplies, and/or services shipped or provided in excess of the quantity ordered. Any authorized quantity is subject to the MHTC's rejection and shall be returned at the contractor's expense.

2.5.7 The MHTC reserves the right to purchase goods and services using the state-purchasing card.

2.6 Other Contractual Requirements:

2.6.1 Escalation Clause **-** In the event the contractor requests a price increase during the contract period, the contractor must provide a written request and documentation justifying the need for a price increase, and the amount of such price increase. MoDOT will review the contractor's written request and documentation, and decide if a price increase is to be granted at that particular time. The contractor shall understand and agree that MoDOT's decision shall be final and without recourse.

a. No price increase shall be granted during the first 3 months of the original contract period.

3. BID SUBMISSION

3.1 Bid Submission Information:

3.1.1 All bids must be received in a sealed envelope clearly marked "**Pole Barn Erection Services**".

3.1.2 All bids must be received at the following address no later than March 10, 2011 at 1:00 p.m., CDT.

The Missouri Department of Transportation
Procurement Department
Attn: Andy McNeill
3025 East Kearney Street
Springfield, MO 65803

3.1.3 The bidder may withdraw, modify or correct his bid after it has been deposited with the Department provided such request is submitted in writing and received at the location designated for the bid opening prior to the time specified for opening bids. Such a request received as specified will be attached to the bid and the bid will be

considered to have been modified accordingly. No bid may be modified after the time specified for the opening of bids.

3.1.4 Open Competition / Request For Bid Document:

a. It shall be the bidder's responsibility to ask questions, request changes or clarification, or otherwise advise MoDOT if any language, specifications or requirements of an RFB appear to be ambiguous, contradictory, and/or arbitrary, or appear to inadvertently restrict or limit the requirements stated in the RFB to a single source. Any and all communication from bidders regarding specifications, requirements, competitive bid process, etc., must be directed to the buyer from MoDOT, unless the RFB specifically refers the bidder to another contact. Such communication should be received at least three (3) working days prior to the official bid opening date.

b. Every attempt shall be made to ensure that the bidder receives an adequate and prompt response. However, in order to maintain a fair and equitable bid process, all bidders will be advised, via the issuance of an amendment to the RFB, of any relevant or pertinent information related to the procurement. Therefore, bidders are advised that unless specified elsewhere in the RFB, any questions received less than three (3) working days prior to the RFB opening date may not be answered.

c. Bidders are cautioned that the only official position of the MoDOT is that which is issued by MoDOT in the RFB or an amendment thereto. No other means of communication, whether oral or written, shall be construed as a formal or official response or statement.

d. MoDOT monitors all procurement activities to detect any possibility of deliberate restraint of competition, collusion among bidders, price-fixing by bidders, or any other anticompetitive conduct by bidders which appears to violate state and federal antitrust laws. Any suspected violation shall be referred to the Missouri Attorney General's Office for appropriate action.

3.1.6 Bids will be reviewed to determine if the bid complies with the mandatory requirements, and to determine the lowest and best bid.

3.1.7 Cost Determination – The low bid shall be determined by adding all of the prices on the pricing pages for the original contract period.

3.1.8 Contract Award – The contract will be awarded to the lowest responsive bidder determined as specified above.

a. Award of this bid will be made on an “Item by Item” basis using the “lowest and best” principle of award.

b. Notification of award shall be at the time the tabulation is posted to the Internet. It is the sole responsibility for all bidders to check the website for bid results.

4. PRICING PAGE

4.1 **Pole Barn Erection Services** - The bidder shall provide a firm, fixed price in the table below for the original contract period for providing the deliverables/services in accordance with the provisions and requirements of this RFB. All costs associated with providing the required deliverables/services shall be included in the prices stated below.

POLE BARN ERECTION SERVICES		
Item #	**Description**	**Original Contract Period** ***Firm, Fixed Price***
001	Pole Barn Erection Services per requirements as listed at the Buffalo Maintenance Facility.	$_____ *each*
002	Pole Barn Erection Services per requirements as listed at the Bolivar Maintenance Facility.	$_____ *each*

_____ _____

Signature ***Date***

ANTI-COLLUSION STATEMENT

STATE OF _____)
) SS.
COUNTY OF _____)

_____

_____being first

duly sworn, deposes and says that he is _____
Title of Person Signing

of _____

_____
Name of Bidder

that all statements made and facts set out in the bid for the above project are true and correct; and that the bidder (The person, firm, association, or corporation making said bid) has not, either directly or indirectly, entered into any agreement, participated in any collusion, or otherwise taken any action in restraint of free competitive bidding in connection with such bid or any contract which may result from its acceptance.

Affiant further certifies that bidder is not financially interested in, or financially affiliated with, any other bidder for the above project.

By _____

By _____

By _____

Sworn to before me this _____ day of _____, 20____.

_____
Notary Public

My Commission Expires _____

PREFERENCE IN PURCHASING PRODUCTS

DATE: _____

The bidders attention is directed to Section 34.076 RSMo 2000 which gives preference to Missouri corporations, firms, and individuals when letting contracts or purchasing products.

Bids/Quotations received will be evaluated on the basis of this legislation.

All vendors submitting a bid/quotation must furnish <u>ALL</u> information requested below.

FOR CORPORATIONS:

State in which incorporated: _____

FOR OTHERS:

State of domicile: _____

FOR ALL VENDORS:

List address of Missouri offices or places of business:

_____

_____

_____

_____

_____

_____

_____

THIS SECTION MUST BE COMPLETED AND SIGNED:

FIRM NAME: _____

ADDRESS: _____

CITY: _____ **STATE:** _____ **ZIP:** _____

BY (signature required): _____

NOTE: For bid/quotation to be considered, the "Preference in Purchasing Products" form must be on file in the General Services (Procurement) Division and must be dated in the current calendar year.

MISSOURI DOMESTIC PRODUCTS PROCUREMENT ACT

The bidder's attention is directed to the Missouri Domestic Products Procurement Act, Sections 34.350 to 34/359, RsMO, which requires all manufactured goods or commodities used or supplied in the performance of this contract or any subcontract to be manufactured or produced in the United States.

Section 34.355, RsMO, requires the vendor or contractor to certify his compliance with Section 34.353 and, if applicable, Section 34.359, RsMO, at the time of bidding **and** prior to payment. Failure to comply with Section 34.353, RsMO, during the performance of the contract **and** to provide certification of compliance prior to payment will result in nonpayment for those goods or commodities.

Section 34.353.2, RsMO, specifies that it does not apply where the total contract is less than Twenty-Five Thousand Dollars ($25,000.00). If your total bid is Twenty-Five Thousand Dollars ($25,000.00) or more, you **must** complete this form as directed below.

Failure to complete and return this document with this bid will cause the State to presume the manufactured goods or products listed in the bid are not manufactured or produced in the United States, and the bid will be evaluated on that basis. Please read the certification appearing below on this form.

[ ] If all the goods or products specified in the attached bid which the bidder proposes to supply to the State shall be manufactured or produced in the "United States" as defined in Section 34.350, RsMO, check the box at left.

[ ] If only one item of any particular goods or products specified in the attached bid is manufactured or produced in the "United States" as defined in Section 34.350, RsMO, check the box at left and list the items (or item number) here:
_____
_____

[ ] If any or all of the goods or products specified in the attached bid which the bidder proposes to supply to the State are **not** manufactured or produced in the "United States" as defined in Section 34.350, RsMO, then: (a) check the box at left; (b) list below, by item (or item number), the country other than the United States where each good or product is manufactured or produced; and (c) check the boxes to the left of the paragraphs below if applicable and list the corresponding items (or item numbers) in the spaces provided.

Item (or item number)	Location Where Item Manufactured or Produced

(attach an additional sheet if necessary)

[ ] The following specified goods or products cannot be manufactured or produced in the United States in sufficient quantities or in time to me the contract specifications. Items (or item numbers): _____
_____

[ ] The following specified goods or products must be treated as manufactured or produced in the United States, in accordance with an existing treaty, law, agreement, or regulation of the United States, including a treaty between the United States and any foreign country regarding export-import restrictions or international trade. Items (or item numbers): _____
_____

CERTIFICATION

By submitting this document, completed as directed above, with a bid, the bidder certifies under penalty of making false declaration (Section 575.060, RsMO) that the information contained in this document if true, correct and complete, and may be relied upon by the State in determining the bidders qualifications under and in compliance with the Missouri Domestic Products Procurement Act.

The bidder's failure to complete and return this document with the bid as directed above will cause the State to presume the manufactured goods or products listed in the bid are not manufactured or produced in the United States, and the bid will be evaluated on that basis pursuant to Section 34.353.3(2), RsMO.

WORKER ELIGIBILITY VERIFICATION AFFIDAVIT FOR ALL MHTC/MODOT CONTRACT AGREEMENTS IN EXCESS OF $5,000

(for joint ventures, a separate affidavit is required for each business entity)

STATE OF _____)
) ss
COUNTY OF _____)

On this _____ day of _____, 20_____, before me appeared _____, personally known to me or proved to me on the basis of satisfactory evidence to be a person whose name is subscribed to this affidavit, who being by me duly sworn, deposed as follows:

My name is _____, and I am of sound mind, capable of making this affidavit, and personally certify the facts herein stated, as required by Section 285.530, RSMo, to enter into any contract agreement with the state to perform any job, task, employment, labor, personal services, or any other activity for which compensation is provided, expected, or due, including but not limited to all activities conducted by business entities:

I am the _____ of _____, and I am duly authorized, directed, and/or empowered
title business name
to act officially and properly on behalf of this business entity.

I hereby affirm and warrant that the aforementioned business entity is enrolled in a federal work authorization program operated by the United States Department of Homeland Security to verify information of newly hired employees, and the aforementioned business entity shall participate in said program with respect to all employees working in connection to work under the within state contract agreement with the Missouri Highways and Transportation Commission (MHTC). I have attached documentation to this affidavit to evidence enrollment/participation by the aforementioned business entity in a federal work authorization program, as required by Section 285.530, RSMo.

In addition, I hereby affirm and warrant that the aforementioned business entity does not and shall not knowingly employ, in connection to work under the within state contract agreement with MHTC, any alien who does not have the legal right or authorization under federal law to work in the United States, as defined in 8 U.S.C. § 1324a(h)(3).

I am aware and recognize that, unless certain contract and affidavit conditions are satisfied pursuant to Section 285.530, RSMo, the aforementioned business entity may be held liable under Sections 285.525 though 285.550, RSMo, for subcontractors that knowingly employ or continue to employ any unauthorized alien to work within the state of Missouri.

I acknowledge that I am signing this affidavit as a free act and deed of the aforementioned business entity and not under duress.

_____
Affiant Signature

Subscribed and sworn to before me this _____ day of _____, 20_____.

_____
Notary Public
My commission expires:

[documentation of enrollment/participation in a federal work authorization program attached]

APPLICANT AFFIDAVIT FOR SOLE-PROPRIETORSHIP OR PARTNERSHIP
(a separate affidavit is required for each owner and general partner)

STATE OF _____)
) ss
COUNTY OF _____)

On this _____ day of _____, 20_____, before me appeared _____, personally known to me or proved to me on the basis of satisfactory evidence to be the person whose name is subscribed to the within instruments, who being by me duly sworn, deposed as follows:

My name is _____, and I am of sound mind, capable of making this affidavit, and personally certify the facts herein stated, as required by Section 208.009, RSMo, for failure to provide affirmative proof of lawful presence in the United States of America:

I am the _____ of _____, which is applying for a public benefit (grant, contract, and/or loan) administered/provided by the Missouri Highways and Transportation Commission (MHTC), acting by and through the Missouri Department of Transportation (MoDOT).
owner or partner business name

I am classified by the United States of America as: (check the applicable box)

- ❑ a United States citizen.
- ❑ an alien lawfully admitted for permanent residence.

I am aware that Missouri law provides that any person who obtains any public benefit by means of a willfully false statement or representation, or by willful concealment or failure to report any fact or event required to be reported, or by other fraudulent device, shall be guilty of the crime of stealing pursuant to Section 570.030, RSMo, which is a Class C felony for stolen public benefits valued between $500 and $25,000 (punishable by a term of imprisonment not to exceed 7 years and/or a fine not more than $5,000 – Sections 558.011 and 560.011, RSMo), and is a Class B felony for stolen public benefits valued at $25,000 or more (punishable by a term of imprisonment not less than 5 years and not to exceed 15 years – Section 558.011, RSMo).

I recognize that, upon proper submission of this sworn affidavit, I will only be eligible for temporary public benefits until such time as my lawful presence in the United States is determined, or as otherwise provided by Section 208.009, RSMo.

I understand that Missouri law requires MHTC/MoDOT to provide assistance in obtaining appropriate documentation to prove citizenship or lawful presence in the United States, and I agree to submit any requests for such assistance to MHTC/MoDOT in writing.

I acknowledge that I am signing this affidavit as a free act and deed and not under duress.

_____
Affiant Signature Affiant's Social Security Number or
Applicable Federal Identification Number

Subscribed and sworn to before me this _____ day of _____, 20_____.

_____
Notary Public
My commission expires:

MISSOURI SERVICE-DISABLED VETERAN BUSINESS PREFERENCE

By virtue of statutory authority, RSMo 34.074, a preference will be given all contracts for the performance of any job or service to service-disabled veteran business either doing business as Missouri firms, corporations, or individuals; or which maintain Missouri offices or places of business, when the quality of performance promised is equal or better and the price quoted is the same or less or whenever competing bids, in their entirety, are comparable.

Definitions:

Service-Disabled Veteran is defined as any individual who is disabled as certified by the appropriate federal agency responsible for the administration of veterans' affairs.

Service-Disabled Veteran Business is defined as a business concern:

a. Not less than fifty-one (51) percent of which is owned by one or more service-disabled veterans or, in the case of any publicly owned business, not less than fifty-one (51) percent of the stock of which is owned by one or more service-disabled veterans; and

b. The management and daily business operations of which are controlled by one or more service-disabled veterans.

If a bidder meets the definitions of a service-disabled veteran and a service-disabled veteran business as defined in 34.074 RSMo and is either doing business as a Missouri firm, corporation, or individual; or maintains a Missouri office or place of business, the bidder **must** provide the following with the bid in order to receive the Missouri service-disabled veteran business preference over a non-Missouri service-disabled veteran business when the quality of performance promised is equal or better and the price quoted is the same or less or whenever competing bids, in their entirety, are comparable:

a. A copy of a letter from the Department of Veterans Affairs (VA), or a copy of the bidder's discharge paper (DD Form 214, Certificate of Release or Discharge from Active Duty) from the branch of service the bidder was in, stating that the bidder has a service-connected disability rating ranging from 0 to 100% disability; and

b. A completed copy of this exhibit

(NOTE: For ease of evaluation, please attach copy of the above-referenced letter from the VA or a copy of the bidder's discharge paper to this Exhibit.)

By signing below, I certify that I meet the definitions of a service-disabled veteran and a service-disabled veteran business as defined in 34.074 RSMo and that I am either doing business as a Missouri firm, corporation, or individual; or maintain Missouri offices or places of business at the location(s) listed below.

Veteran Information	Business Information
Service-Disabled Veteran's Name, (Please Print)	Service-Disabled Veteran Business Name
Service-Disabled Veteran's Signature	Missouri Address of Service-Disabled Veteran Business

STANDARD SOLICITATION PROVISIONS

a. The Missouri Department of Transportation (MoDOT) reserves the right to reject any or all bids/quotes/proposals, and to accept or reject any items thereon, and to waive technicalities. In case of error in the extension of prices in the bid/quote/proposal, unit prices will govern.

b. All bids/quotes/proposals must be signed with the firm name and by a responsible officer or employee. Obligations assumed by such signature must be fulfilled.

c. By virtue of statutory authority, a preference will be given to materials, products, supplies, provisions and all other articles produced, manufactured, made or grown, within the State of Missouri.

d. Time of delivery is a part of the consideration and, if not otherwise stated in the solicitation documents, must be stated in definite terms by the Bidder/Offeror and must be adhered to. If time varies on different items, the Bidder/Offeror shall so state.

e. If providing bids/quotes/proposals for commodities, the Bidder/Offeror will state brand or make on each item. If bidding or proposing other than the make, model or brand specified, the manufacturer's name, model number or catalog number must be given.

f. **For bids/proposals of $25,000** or more, no bids/proposals by telephone, telegram or telefax will be accepted.

g. The date specified for the returning of bids/quotes/proposals is a firm deadline and all bids/quotes/proposals must be received at the designated office by that time. The Department does not recognize the U.S. Mail, Railway Express Agency, Air Express, or any other organization, as its agent for purposes of accepting proposals. All proposals arriving at the designated office after the deadline specified will be rejected.

GENERAL TERMS AND CONDITIONS

General Performance

a. Bidders are encouraged to obtain minority business enterprise (MBE) and women business enterprise (WBE) participation in this work through the use of subcontractors, suppliers, joint ventures, or other arrangements that afford meaningful participation for M/WBEs. Bidders are encouraged to obtain 10% MBE and 5% WBE participation.

b. This work is to be performed under the general supervision and direction of the Missouri Department of Transportation (MoDOT) and, if awarded any portion of the work, the Contractor agrees to furnish at his own expense all labor and equipment required to complete the work, it being expressly understood that this solicitation is for completed work based upon the price(s) specified and is not a solicitation for rental of equipment or employment of labor by MoDOT, and MoDOT is to have no direction or control over the employees used by the Contractor in performance of the work.

Deliveries

a. Unless otherwise specified on the solicitation documents or purchase order, suppliers shall give at least 24 hours advance notice of each delivery. Delivery will only be received between the hours of 8:00 a.m. to 3:00 p.m., Monday through Friday. Material arriving after 3:00 p.m. will not be unloaded until the following workday. No material will be received on Saturday, Sunday or state holidays.

b. If the prices bid herein include the delivery cost of the material, the Contractor agrees to pay all transportation charges on the material as FOB - Destination. Freight costs must be included in the unit price bid and not listed as a separate line item.

c. Any demurrage is to be paid by the Contractor direct to the railroad or carrier.

Nondiscrimination

a. The Contractor shall comply with the Regulations relative to nondiscrimination in federally-assisted programs of the Department of Transportation, Title 49, Code of Federal Regulations, Part 21, as they may be amended from time to time, (hereinafter referred to as the Regulations), which are herein incorporated by reference and made a part of this contract.

b. All solicitations either by competitive bidding or negotiation made by the Contractor for work to be performed under a subcontract, including procurements of materials or leases of the Contractor's obligations under this contract and the Regulations, will be relative to nondiscrimination on the grounds of race, color, or national origin.

1) Sanctions for Noncompliance: In the event of the Contractor's noncompliance with the nondiscrimination provisions of this contract, MoDOT shall impose such contract sanctions as it or the Federal Highway Administration may determine to be appropriate, including, but not limited to:

i. withholding of payments to the Contractor under the contract until the Contractor complies, and/or,

ii. cancellation, termination or suspension of the contract, in whole or in part.

Contract/Purchase Order

a. By submitting a bid/quote/proposal, the Bidder/Offeror agrees to furnish any and all equipment, supplies and/or services specified in the solicitation documents, at the prices quoted, pursuant to all requirements and specifications contained therein.

b. A binding contract shall consist of: (1) the solicitation documents, amendments thereto, and/or Best and Final Offer (BAFO) request(s) with any changes/additions, (2) the Contractor's proposal and/or submitted pricing, and (3) the MHTC's acceptance of the proposal and/or bid by purchase order or post-award contract.

c. A notice of award does not constitute an authorization for shipment of equipment or supplies or a directive to proceed with services. Before providing equipment, supplies and/or services, the Contractor must receive a properly authorized purchase order and/or notice to proceed.

d. The contract expresses the complete agreement of the parties and performance shall be governed solely by the specifications and requirements contained therein. Any change, whether by modification and/or supplementation, must be accomplished by a formal contract amendment signed and approved by and between the duly authorized representative of the Contractor and the duly authorized representative of the MHTC, by a modified purchase order prior to the effective date of such modification. The Contractor expressly and explicitly understands and agrees that no other method and/or no other document, including correspondence, acts, and oral communications by or from any person, shall be used or construed as an amendment or modification.

Subcontracting

a. It is specifically understood that no portion of the material or any interest in the contract, shall be subcontracted, transferred, assigned or otherwise disposed of, except with the written consent of MoDOT. Request for permission to subcontract or otherwise dispose of any part of the work shall be in writing to MoDOT and accompanied by documentation showing that the organization which will perform the work is particularly experienced and equipped for such work.

b. Consent to subcontract or otherwise dispose of any portion of the work shall not be construed to relieve the Contractor of any responsibility for the production and delivery of the contracted work and the completion of the work within the specified time.

c. All payments for work performed by a subcontractor shall be made to the Contractor to whom the contract was awarded and the purchase order issued.

Invoicing and Payment

a. MoDOT is exempt from paying Missouri Sales Tax, Missouri Use Tax and Federal Excise Tax. However, the Contractor may themselves be responsible for the payment of taxes on materials they purchase to fulfill the contract. A Project Tax Exemption Certificate will be furnished to the successful Bidder/Offeror upon request if applicable.

b. Each invoice should be itemized in accordance with items listed on the purchase order and/or contract. The statewide financial management system has been designed to capture certain receipt and payment information. Therefore, each invoice submitted must reference the purchase order number and must be itemized in accordance with items listed on the purchase order. Failure to comply with this requirement may delay processing of invoices for payment.

c. Unless otherwise provided for in the solicitation documents, payment for all equipment, supplies, and/or services required herein shall be made in arrears. The Missouri Highways and Transportation Commission (MHTC) shall not make any advance deposits.

d. The MHTC assumes no obligation for equipment, supplies, and/or services shipped or provided in excess of the quantity ordered. Any authorized quantity is subject to the MHTC's rejection and shall be returned at the Contractor's expense.

e. The MHTC reserves the right to purchase goods and services using the state-purchasing card.

Applicable Laws and Regulations

a. The contract shall be construed according to the laws of the State of Missouri. The Contractor shall comply with all local, state, and federal laws and regulations related to the performance of the contract.

b. The Contractor must be registered and maintain good standing with the Secretary of State of the State of Missouri and other regulatory agencies, as may be required by law or regulations. Prior to the issuance of a purchase order and/or notice to proceed, the Contractor may be required to submit to MoDOT a copy of their current Authority Certificate from the Secretary of State of the State of Missouri.

   1) Prior to the issuance of a purchase order and/or notice to proceed, all **out-of-state** Contractors **providing services** within the state of Missouri must submit to MoDOT a copy of their current Transient Employer Certificate from the Department of Revenue, in addition to a copy of their current Authority Certificate from the Secretary of State of the State of Missouri.

c. The exclusive venue for any legal proceeding relating to or arising, out of the contract shall be in the Circuit Court of Cole County, Missouri.

Executive Order

a. The Contractor shall comply with all the provisions of Executive Order 07-13, issued by the Honorable Matt Blunt, Governor of Missouri, on the sixth (6th) day of March, 2007. This Executive Order, which promulgates the State of Missouri's position to not tolerate persons who contract with the state engaging in or supporting illegal activities of employing individuals who are not eligible to work in the United States, is incorporated herein by reference and made a part of this Agreement.

   1) "By signing this Agreement, the Contractor hereby certifies that any employee of the Contractor assigned to perform services under the contract is eligible and authorized to work in the United States in compliance with federal law."

   2) In the event the Contractor fails to comply with the provisions of the Executive Order 07-13, or in the event the Commission has reasonable cause to believe that the contractor has knowingly employed individuals who are not eligible to work in the United States in violation of federal law, the Commission reserves the right to impose such contract sanctions as it may determine to be appropriate, including but not limited to contract cancellation, termination or suspension in whole or in part or both.

   3) The Contractor shall include the provisions of this paragraph in every subcontract. The Contractor shall take such action with respect to any subcontract as the Commission may direct as a means of enforcing such provisions, including sanctions for noncompliance.

Preferences

a. In the evaluation of bids/quotes/proposals, preferences shall be applied in accordance with Chapter 34 RSMo. Contractors should apply the same preferences in selecting subcontractors.

b. By virtue of statutory authority, RSMo. 34.076 and 34.350 to 34.359, a preference will be given to materials, products, supplies, provisions and all other articles produced, manufactured, made or grown within the State of Missouri. Such preference shall be given when quality is equal or better and delivered price is the same or less.

   1) If attached, the document entitled **"PREFERENCE IN PURCHASING PRODUCTS"** should be completed and returned with the solicitation documents.

2) If attached, the document entitled **"MISSOURI DOMESTIC PRODUCTS PROCUREMENT ACT"** should be completed and returned with the solicitation documents**. Applies if bid is Twenty-Five Thousand Dollars ($25,000.00) or more.**

c. By virtue of statutory authority, RSMo 34.074, a preference will be given all contracts for the performance of any job or service to service-disabled veteran business either doing business as Missouri firms, corporations, or individuals; or which maintain Missouri offices or places of business, when the quality of performance promised is equal or better and the price quoted is the same or less or whenever competing bids, in their entirety, are comparable.

1) If attached, the document entitled **"MISSOURI SERVICE-DISABLED VETERAN PREFERENCE"** should be completed and returned with the solicitation documents.

d. In the event of a tie of low bids, the MHTC reserves the right to establish the method to be used in determining the award

Remedies and Rights

a. No provision in the contract shall be construed, expressly or implied, as a waiver by the MHTC of any existing or future right and/or remedy available by law in the event of any claim by the MHTC of the Contractor's default or breach of contract.

b. The Contractor agrees and understands that the contract shall constitute an assignment by the Contractor to the MHTC of all rights, title and interest in and to all causes of action that the Contractor may have under the antitrust laws of the United States or State of Missouri for which causes of action have accrued or will accrue as the result of or in relation to the particular equipment, supplies, and/or services purchased or produced by the Contractor in the fulfillment of the contract with the MHTC.

c. In the event a Contractor becomes involved in, or is threatened with, litigation with a subcontractor or supplier as a result of such direction, the Contractor may request MoDOT to enter into such litigation to protect the interests of the MHTC, and, in addition, the Contractor may request the United States to enter into such litigation to protect the interests of the United States.

Cancellation of Contract

a. The MHTC may cancel the contract at any time for a material breach of contractual obligations or for convenience by providing the Contractor with written notice of cancellation. Should the MHTC exercise its right to cancel the contract for such reasons, cancellation will become effective upon the date specified in the notice of cancellation sent to the Contractor.

b. If the MHTC cancels the contract for breach, the MHTC reserves the right to obtain the equipment, supplies, and/or services to be provided pursuant to the contract from other sources and upon such terms and in such manner as the MHTC deems appropriate and charge the Contractor for any additional costs incurred thereby.

Bankruptcy or Insolvency

a. Upon filing for any bankruptcy or insolvency proceeding by or against the Contractor, whether voluntary or involuntary, or upon the appointment of a receiver, trustee, or assigned the benefit or creditors, the Contractor must notify MoDOT immediately. Upon learning of any such actions, the MHTC reserves the right, at its sole discretion, to either cancel the contract or affirm the contract and hold the Contractor responsible for damages.

Inventions, Patents, and Copyrights

a. The Contractor shall defend, protect, and hold harmless the MHTC, its officers, agents, and employees against all suits of law or in equity resulting from patent and copyright infringement concerning the Contractor's performance or products produced under the terms of the contract.

Inspection and Acceptance

a. No equipment, supplies, and/or services received by MoDOT pursuant to a contract shall be deemed accepted until MoDOT has had reasonable opportunity to inspect said equipment, supplies, and/or services.

b. All equipment, supplies, and/or services which do not comply with the specifications and/or requirements or which are otherwise unacceptable or defective may be rejected. In addition, all equipment, supplies, and/or services which are discovered to be defective or which do not conform to any warranty of the Contractor upon inspection (or at any later time if the defects contained were not reasonably ascertainable upon the initial inspection) may be rejected.

c. The MHTC reserves the right to return any such rejected shipment at the Contractor's expense for full credit or replacement and to specify a reasonable date by which replacements must be received.

d. The MHTC's right to reject any unacceptable equipment, supplies, and/or services shall not exclude any other legal, equitable or contractual remedies the MHTC may have.

Warranty

a. The Contractor expressly warrants that all equipment, supplies, and/or services provided shall: (1) conform to each and every specification, drawing, sample or other description which was furnished to or adopted by MoDOT, (2) be fit and sufficient for the purpose expressed in the solicitation documents, (3) be merchantable, (4) be of good materials and workmanship, and (5) be free from defect.

b. Such warranty shall survive delivery and shall not be deemed waived either by reason of the MHTC's acceptance of or payment for said equipment, supplies, and/or services.

Status of Independent Contractor

a. The Contractor represents itself to be an independent Contractor offering such services to the general public and shall not represent itself or its employees to be an employee of the MHTC. Therefore, the Contractor shall assume all legal and financial responsibility for taxes, FICA, employee fringe benefits, workers' compensation, employee insurance, minimum wage requirements, overtime, etc., and agrees to indemnify, save and hold the MHTC, its officers, agents and employees harmless from and against any and all losses (including attorney fees) and damage of any kind related to such matters.

Indemnification

a. The Offeror shall defend, indemnify and hold harmless the Commission, including its members and department employees, from any claim or liability whether based on a claim for damages to real or personal property or to a person for any matter relating to or arising out of the Offeror's performance of its obligations under this Agreement.

SPECIAL TERMS AND CONDITIONS

Insurance

The Contractor shall maintain or cause to be maintained at Contractor's own expense commercial general liability, automobile liability, worker's compensation insurance against negligent acts, errors or omissions of the Contractor, or its subcontractors and anyone directly or indirectly employed by any of them. Any insurance policy required as specified in this Section shall be written by a company that is licensed and authorized to issue such insurance in the state of Missouri and shall provide insurance coverage for not less than the following limits of liability:

a. General Liability: Not less than $500,000 for any one person in a single accident or occurrence, and not less than $1,000,000 for all claims arising out of a single occurrence;

b. Automobile Liability: Not less than $500,000 for any one person in a single accident or occurrence, and not less than $1,000,000 for all claims arising out of a single occurrence;

c. Missouri State Workmen's Compensation policy or equivalent in accordance with state law.

Upon request from the Commission, the Contractor shall provide the Commission with certificates of insurance evidencing the required coverage and that such insurance is in effect.

Information and Reports

a. The Contractor shall provide all information and reports required by the Regulations, or Directives issued pursuant thereto, and shall permit access to its books, records, accounts, other sources of information, and its facilities as may be determined by the Missouri Department of Transportation or the Federal Highway Administration to be pertinent to ascertain compliance with such Regulations or Directives. Where any information required of a Contractor is in the exclusive possession of another who fails or refuses to furnish this information the Contractor shall so certify to the Missouri Department of Transportation, or the Federal Highway Administration as appropriate, and shall set forth what efforts it has made to obtain the information.

Prevailing Wage

a. If the bid/quote/proposal is accepted, the vendor will be required to comply with the prevailing wages as fixed by the Missouri Department of Labor and Industrial Relations, in effect as of the date of the issuance of the solicitation, for each affected craft and type of workmen in the following county(ies): **Dallas and/or Polk**. The Annual Wage Order #**_17_** may be inspected at any District Office or at the Central Office in Jefferson City, MO.

b. The Contractor shall submit notarized weekly payroll affidavit documentation included with the project request for payment. The successful vendor must provide a lien waiver from all material suppliers.

Permits, Licenses and Safety Issues

a. The contract price shall include any necessary permits and licenses required by law incidental to the work. Local ordinances requiring building permits are not applicable to state agencies.

b. The Contractor will comply with local laws involving safety in the prosecution of the work.

Award

a. Award of this bid/quote/proposal will be made on an "Item by Item" basis using the "lowest and best" principle of award.

Notice to Proceed

a. Within **30 days** after the execution of the contract, a **"Notice to Proceed"** will be issued by the Department. A purchase order will be attached to the "Notice to Proceed," which will specify the date or dates that the Contractor can start delivery, roadway or stockpile delivery and will also include the completion dates. These dates will be in accordance with the dates shown in the proposal.

Delivery – Additional Requirements

a. The Contractor shall furnish the Missouri Department of Transportation with a planned delivery schedule at least 16 hours before starting work.

   1) Notification should be during the normal workday preceding the day on which the Contractor desires to initiate work.

   2) It will be necessary for a representative of the Missouri Department of Transportation to be present when the work is performed.

b. No deliveries will be made during the period from **30 minutes before sundown to sunrise.** No deliveries will be made on **Saturdays, Sundays and holidays** unless specifically authorized by the engineer.

c. The following days shall be construed as **official holidays** under the terms of the contract:

January l	New Year's Day
Third Monday in January	Martin Luther King, Jr.'s Birthday
February 12	Lincoln's Birthday
Third Monday in February	Washington's Birthday
May 8	Truman's Birthday
Last Monday in May	Memorial Day
July 4	Independence Day
First Monday in September	Labor Day
Second Monday in October	Columbus Day
November 11	Veteran's Day
Fourth Thursday in November	Thanksgiving Day
December 25	Christmas Day

d. When any of the above **holidays falls** on a **Sunday,** the holiday will be observed on the following **Monday**; when any of the above **holidays falls** on a **Saturday**, the **holiday** will be observed on the immediately preceding **Friday.**

Temporary Suspension of Work

a. The **District Engineer** shall have authority to suspend work wholly or in part for such period or periods as may be deemed necessary when weather or other conditions are such that in the opinion of the engineer, the work may be done at a later time with advantage to the Department or for failure on the part of the Contractor to comply with any of the provisions of the Contract.

b. If the Department suspends the work for its own advantages and not because of the Contractor's failure to comply with the Contract, the Contractor will be allowed an equal number of calendar days after the completion date for the completion of the work. The Department may at its discretion give the Contractor an extension of time for completing the work where the Contractor incurs delays for causes beyond his control.

c. Normal rainfall is not considered a cause qualifying for an extension of time. Claim for extension of time for all causes must be submitted by the Contractor in writing within **30 Days** after the claimed cause for the delay has ceased to exist.

Cancellation of Contract

a. If the Contractor/supplier fails to carry out the performance of the work with sufficient workmen and equipment to insure the completion of the delivery within the time specified or becomes insolvent or is adjudicated a bankrupt or commits any act of bankruptcy or insolvency or allows any final judgment to stand against him for a period of ten (10) days, the Missouri Department of Transportation may give notice in writing by registered mail to the Contractor/supplier and the surety of such delay, neglect or default.

b. If, within ten (10) days after such notice the Contractor/supplier does not proceed to remedy to the satisfaction of the Department's representatives the faults specified in said notice, or the surety does not proceed to take over the deliveries, the Department shall have full power and authority, without impairing the obligation of the Contractor/supplier under the contract, to take over the completion of the work and arrange for the shipment of any materials necessary to complete the work and the Contractor/supplier and the contractor will be responsible for any additional costs incurred by the Department in obtaining the completion of the deliveries.

Environmental Issues

Attention of the bidder is invited to the **Land Reclamation Act, Chapter 444, Laws of 1971, (House Bill 519)** and the necessity for compliance if applicable.

The Contractor shall take necessary precautions and shall schedule and conduct his operations so as to avoid or minimize siltation of streams while removing gravel there from.

Prohibition Of Employment Of Unauthorized Aliens:

a. Pursuant to RSMo 285.530 (1), no business entity or employer shall knowingly employ, hire for employment, or continue to employ an unauthorized alien to perform work within the state of Missouri. As a condition for the award of any contract or grant in excess of five thousand dollars by the state or by any political subdivision of the state to a business entity, or for any business entity receiving a state-administered or subsidized tax credit, tax abatement, or loan from the state, the business entity shall, by sworn affidavit and provision of documentation, affirm its enrollment and participation in a federal work authorization program with respect to the employees working in connection with the contracted services. Every such business entity shall sign an affidavit affirming that it does not knowingly employ any person who is unauthorized alien in connection with the contracted services. [RSMO 285.530 (2)] A copy of the affidavit referenced above is provided within this document.

E-Verify is an example of a federal work authorization program. Acceptable enrollment and participation documentation consists of **completed** copy of the E-Verify Memorandum of Understanding (MOU). For vendors that are not already enrolled and participating in a federal work authorization program, E-Verify is available at http://www.dhs.gov/xprevprot/programs/gc_1185221678150.shtm.

Construction Safety Program

a. Missouri law, 292.675 RSMo, requires the awarded Contractor and its subcontractor(s) to provide a ten-hour occupational safety and health administration (OSHA) construction safety program (or a similar program approved by the Missouri Department of Labor and Industrial Relations as a

qualified substitute) for their on-site employees (laborers, workmen, drivers, equipment operators, and craftsmen) who have not previously completed such a program and are directly engaged in actual construction of the improvement (or working at a nearby or adjacent facility used for construction of the improvement). The Contractor and its subcontractor(s) shall require all such employees to complete this ten-hour program, pursuant to 292.675 RSMo, unless they hold documentation on their prior completion of said program. Penalties for non-compliance include Contractor forfeiture to the Commission in the amount of $2,500, plus $100 per contractor and subcontractor employee for each calendar day such employee is employed beyond the elapsed time period for required program completion under 292.675 RSMo.

SECTION
13125

PRE-ENGINEERED POLE STRUCTURES

PART 1 GENERAL

The following Pre-Engineered Post Frame Structure specifications are based on requirements of Stockade Buildings other manufacturer's meeting these specifications may be accepted.

Manufacturer Qualifications:

Company specializing in manufacturing and supplying Pre-Engineered Post Frame Buildings specified in this section with three years documented experience.

Design structural components, develop shop drawings, and perform shop work under direct Supervision of a professional Structural Engineer experienced in design of this work and licensed in the State of Missouri.

Laminated Foundation Columns and Footings:

The structural nail laminated foundation columns shall be three members No. 1 or better Southern Pine, Kiln dried to 19% moisture content. Foundation columns shall be pressure treated with a wood preservative to a retention of 0.8 pounds per cubic foot and kiln dried after treating to 19% maximum moisture content. The wood preservative shall be Chromated Copper Arsenate Type III, Oxide type; or equal as listed in Federal Specification TT-W-571J. The preservative shall penetrate 100% of the sapwood. A letter of certification from the wood preserver shall be furnished with certifies the 0.8 pcf preservative retention for a 0 to 0.75" assay zone.

The foundation columns shall be accurately placed and shall extend 4'-0" minimum below grade. The foundation column shall have a ½" diameter x 10" long steel rod, located 3-1/2" up from the base, and extending through all (3) members. Base of column shall be set in a footing of 28 day test verified 3,000 psi compressive strength dry concrete mix, half under and half around to permanently attach the footing and foundation column. The footing shall bear on undisturbed soil. Footing size shall be determined from applied structural loads and 4,000 #/S.F. presumptive soil bearing capacity. After accurate placement of foundation column and specified footing, hole shall be backfilled with dry, debris-free dirt compacted in 8" lifts.

Laminated Upper Columns:

No. 1 or better Southern Pine nail and glue laminated repetitive S4S members of 19% maximum moisture content shall be sized according to dimensions of structure and required structural loads.

Foundation Column to Upper Column Connection:

Structural design shall show, by test or calculation, the foundation column to upper column connection to be adequate for all imposed bending and axial forces.

Splash Boards:

Splashboards are No. 2 or better Southern Pine nominal 2x8 S4S pressure treated to a net retention of 0.4 pounds per cubic foot with MCQ in accordance with American Wood Preservers Association Specification C2.

Eave board:

Sidewall eave boards shall be 2x6 No. 2 Spruce-Pine-Fir or better, and shall be beveled on the top edge at the same degree as the roof slope.

Framing Lumber:

Wall girts shall be 2x6 No. 2 Southern Pine, 19% maximum moisture content spaced approximately 30" o.c., with all ends bearing into wide face of column. Roof purlins shall be recessed between trusses, on edge, and attached to trusses with adequate fasteners. Continuous 2x4 lateral bracing shall be provided as required in truss specification. All other framing lumber shall be standard grade or better unless specified differently on plans. All lumber shall be free of warping, twisting, or splitting.

Specification for Metal Plate Connected Wood Trusses:

1. All lumber used in the design of wood trusses must be cured and graded in accordance with the current grading rules. Design stresses allowed are those listed in the current editions of respective lumber association's grading rules.
2. The design of wood members must be in accordance with the formulas published in the latest edition of the National Design Specification for Wood Construction as revised to current date.
3. Metal connector plates and joint design must conform to specifications as set forth in the 1995 edition of the recommended design practice of the Truss Plate Institute, Inc. Entitled Design Specification for Metal Plate Connected Wood Trusses (TPI-95) as Revised to current date.
4. Truss members and joints must be designed in accordance with TPI-95. All trusses Designs must be accompanied by complete and accurate shop drawings bearing the seal of a Professional or Structural Engineer, registered in the project State, and contains the following information:
    - (a) Slope of depth, span and spacing of the truss.
    - (b) Location of all joints.
    - (c) Bearing width.
    - (d) Design loading to include, as applicable:
        - (1) Top chord live load.
        - (2) Top chord dead load.
        - (3) Bottom chord live load.
        - (4) Bottom chord deal load.
        - (5) Concentrated loads and their points of application.
    - (e) Adjustments to lumber and plate design vales to include modification for, as Applicable:
        - (1) Moisture service conditions.
        - (2) Temperature.
        - (3) Preservative treatment.
        - (4) Fire retardant treated wood.
        - (5) Duration of load.
        - (6) Flexure.
        - (7) Shear.
    - (f) Each reaction force.
    - (g) Each axial force (Heel panel axial forces shall not exceed 25,000#)
    - (h) Lateral bracing requirements:
        - (1) Top chord brace (roof purlins) spacing.
        - (2) Bottom chord brace spacing.
        - (3) Web bracing, as applicable.
    - (i) Plate type, thickness or gauge, size; basic plate design value (specifying gross or Net value); and the dimensioned location of each plate except where symmetrically located relative to the joint interface.
    - (j) Lumber size, species, and grade for each member.
5. Design calculations for bending moments shall be available from the designer.

Roofing and Siding Panels:

Metal panels are GALVALUME ™ (Max Rib Ultra) 80,000#/SI minimum yield strength structural grade sheet steel. The paint process is a Kynar 500/Hylar 5000 Fluropon paint system. Utilizing the full strength 70% PVDF (fluoropolymer) resin and durable ceramic pigmentation. Panels shall be fastened with nails or screws, which are compatible to the panels in both life expectance and environmental stability. All panels will be one piece unless lengths greater than 40 feet are required or the panels must be shortened to accommodate certain building features. (GALVALUME ™) is a trademark of the Bethlehem Steel Corporation. Kynar 500 is a registered trademark of Elf Atochem North America, Inc. Hylar 5000 is a trademark of Ausimont USA, Inc. Fluropon is a registered trademark of the Valspar Corporation.

Steel Panel Attachment:

Screw Fastener:

The steel panels shall be fastened to building framing by plated steel sharp point screws with zinc/aluminum/cast nonferrous alloy hex washer heads pre-assembled with aluminum bond seal washers, which cannot red rust and are compatible with steel panel. Woodzac by Construction Fasteners, Inc., or equal are acceptable.

Nail Fasteners – Framing:

9 gauge x 3-1/2" length 16d oil quench hardened lock ring shank framing nails – galvanized when in contact with pressure treated lumber.

Closure Strips:

1" wide closed-cell linked expanded polyurethane, to match panel corrugation.

Openings:

All openings shall be framed to proper size and trimmed to cover all exterior edges with pre-painted flashings.

Trim:

0.0158-inch min. thickness steel on gables, ridge, corners, base, windows, and doors with same paint finish as roofing and siding panels.

Gutters and Downspouts:

See Specification 07712. Paint finish as roofing and siding panels and to be selected by owner.

Design Requirements:

Design members to withstand 15 p.s.f. non-reducible snow load, and 5 p.s.f. collateral load (minimum) or as determined by the collaboration of equipment suppliers and 90 mph design loads due to pressure and suction of wind Exposure "B". Design shall conform to 2003 International Building Code.

Warranty:

1. Treated Wood Columns: Minimum 40 Years against Decay and Insect Damage when in Contact with Soil.

2.Max-Rib Steel Panels:

a. 30 Years against Crack, Peel, Blister or Flake of Paint Coating

b.40 Years against Chalk in Excess of 8 Per ASTM D-4214 Method D659

c.40 Years against Change of Color in Excess of 5 per ASTM D-2244

Snow Guard:

Equal to SnowBlox, SnoBar by Action Manufacturing, LLC, Engle, CO Ph: (800) 711-9724.

Design Requirements: Continuous linear roof snow retention system along front of building should have a minimum performance of 500# per lineal foot of bar without deflection. Connection must be used at every roof seam.

Bar: 16 ga. galvanized steel with Polane Plus Enamel. Bar color to match metal roof or as selected by Architect.

Connection: Stainless steel U- Bracket with stainless steel screws.

Substrate Below Roof Panel: 2-Ply purlin at eave attachment line or double stagger line.

Quality Assurance: 5-years.

END OF SECTION

DESIGN PARAMETERS:

1. BUILDING CODE	IBC 2003
2. LIVE LOAD ROOF	20 PSF
3. DEAD LOAD ROOF	9 PSF
4. EARTHQUAKE	ZONE 1
5. WIND	90 MPH, EXPOSURE B

DESIGN NOTES:

1. DESIGN LOADS CALCULATED USING ALLOWABLE STRESS DESIGN METHOD.
2. LUMBER CAPACITY PROVIDED BY "NATIONAL DESIGN SPECIFICATION (NDS) FOR WOOD CONSTRUCTION AND NDS SUPPLEMENT: DESIGN VALUES FOR WOOD CONSTRUCTION.
3. DESIGN VALUES FOR MAJOR COMPONENTS (DESIGN LOAD/MEMBER CAPACITY):
   4-PLY POSTS: 7,250 LBF/12,100 LBF
   3-PLY POSTS: 1,015 LBF/7,069 LBF
   GARAGE DOOR HEADERS: 25,490 LB-FT/47,381 LB-FT
   PURLINS: 536 LB-FT/728 LB-FT

GENERAL NOTES:

1. ROOF TRUSSES AND RAFTERS SHALL BE ANCHORED TO THE TOP PLATE OF LOAD BEARING WALLS WITH SEISMIC AND HURRICANE ANCHORS EQUAL TO SIMPSON STRONG TIE #H1 ANCHORS.
2. PROPOSED METAL ROOF AND SIDE PANELS TO BE 29 GA. AS PER MODOT SPECIFICATIONS. FASTENERS AS MANUFACTURED BY SEAL-TITE.
3. FASTENERS FOR LUMBER CONNECTIONS TO BE 20d GALVANIZED RING SHANK NAILS.

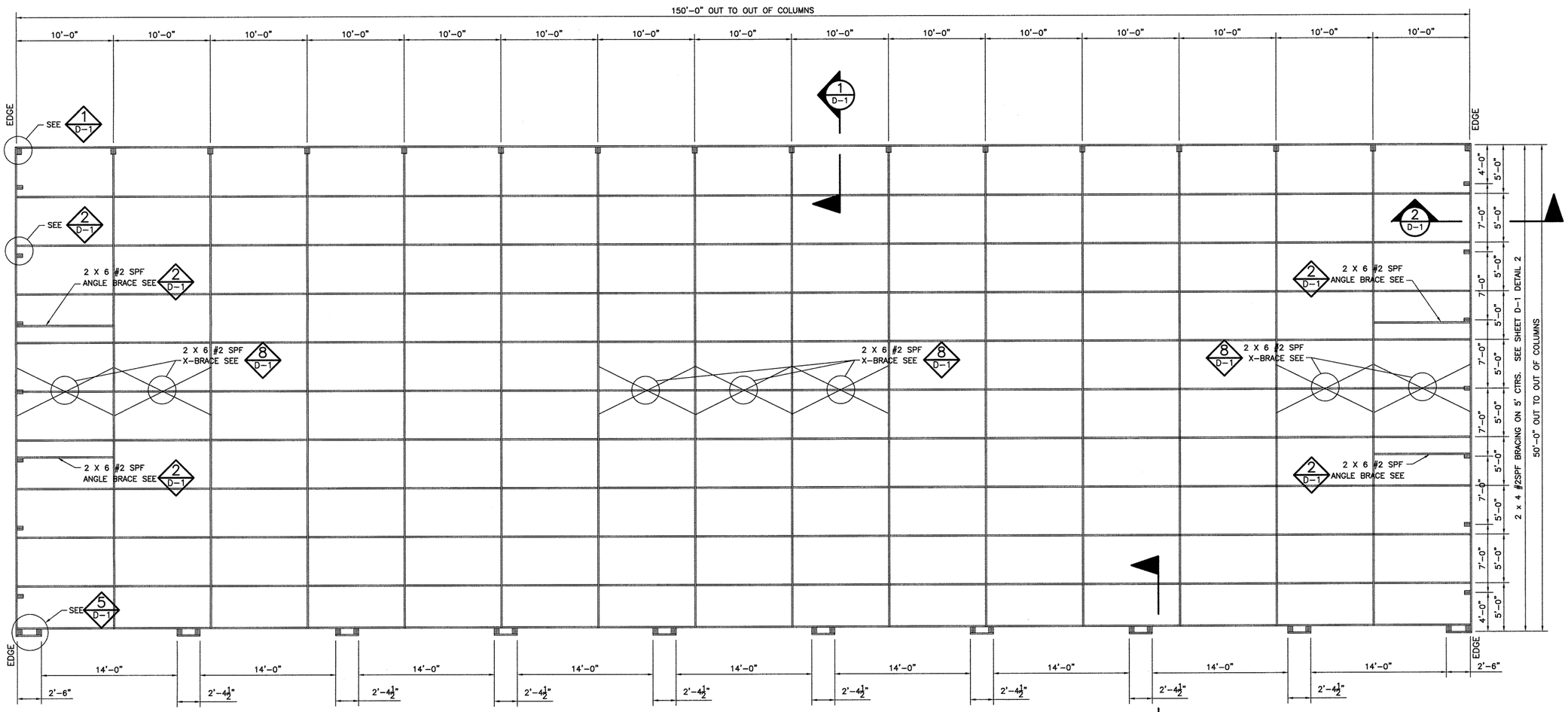

1 / – PLAN: ERECTION PLAN
3/16"=1'

7 / D-1

STATE OF MISSOURI
STEPHEN D. LEPAGE
NUMBER E-020319
5/7/09

NO.	DATE	REVISION DESCRIPTION	BY	NO.

STORAGE BUILDING MISSOURI DEPARTMENT OF TRANSPORTATION

150' X 50' BUILDING ERECTION PLAN

SURVEYED	DESIGNED	DRAWN	CHECKED	APPROVED	DATE	SCALE	DRAWING NO.	PROJECT NO.	SHEET NO.
N/A	SDL	SDL	CJL	SDL	5/5/09	AS SHOWN	-	-	EP-1

Central Missouri Engineering
CME

CENTRAL MISSOURI ENGINEERING
6909 Route M
Jefferson City, Missouri 65101

Telephone: (573) 338-3909
Facsimile: (573) 395-3301

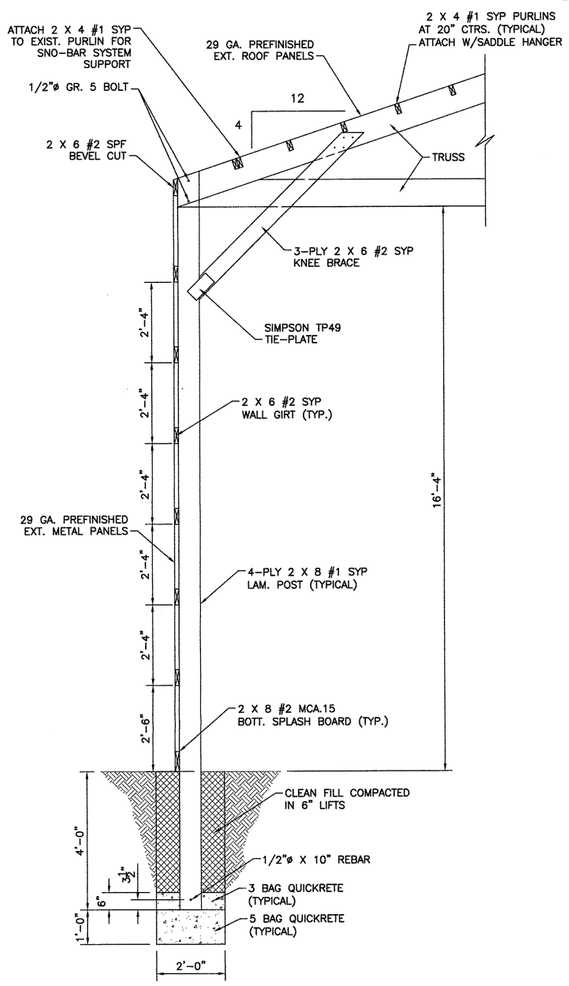

1 DETAIL: SIDEWALL POSTS
1/2"=1'

NOTE: ATTACH 2 X 6 KNEE BRACE TO TOP CHORD OF TRUSS USING 4-20d GALV. RING NAILS.

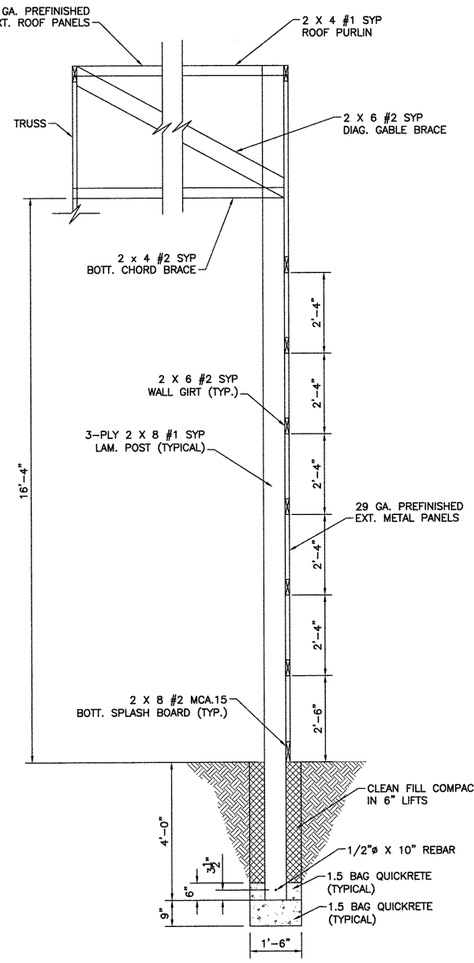

2 DETAIL: ENDWALL POSTS
1/2"=1'

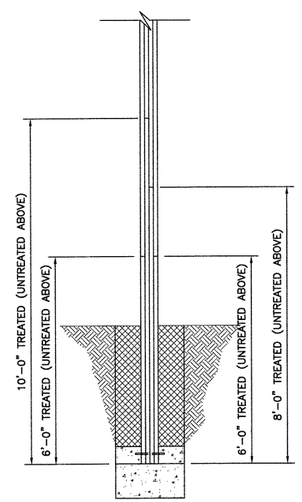

3 DETAIL: 4-PLY POST SPLICE
1/2"=1'

NOTE: POST SPLICE MADE USING OHIO TIMBERLAND PRODUCTS STAIN. STEEL W/FACE GLUE.

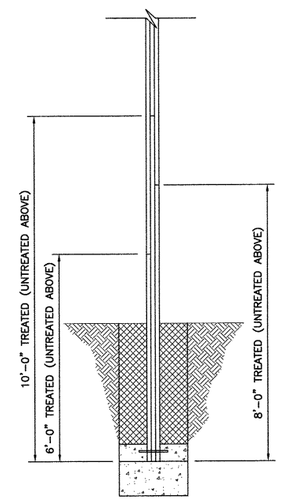

4 DETAIL: 3-PLY POST SPLICE
1/2"=1'

NOTE: POST SPLICE MADE USING OHIO TIMBERLAND PRODUCTS STAIN. STEEL W/FACE GLUE.

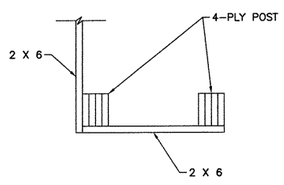

5 DETAIL: GARAGE DOOR JAMB
3/4"=1'

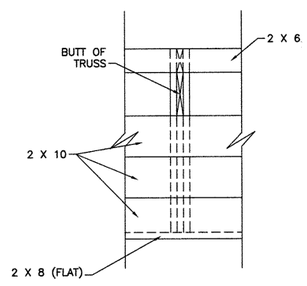

6 DETAIL: GARAGE DOOR HEADER
3/4"=1'

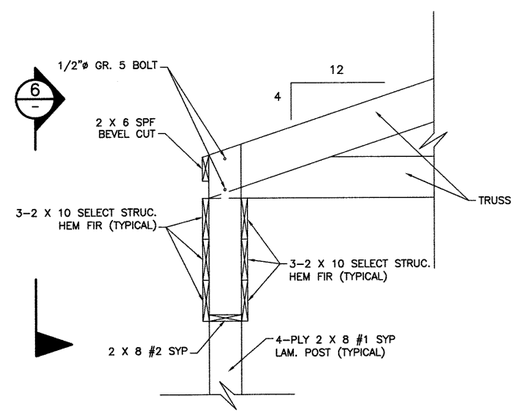

7 DETAIL: GARAGE DOOR HEADER
3/4"=1'

NOTE: ATTACH 2 X 10 HEADER TO POST USING 6-20d GALV. RING NAILS PER EACH MEMBER.

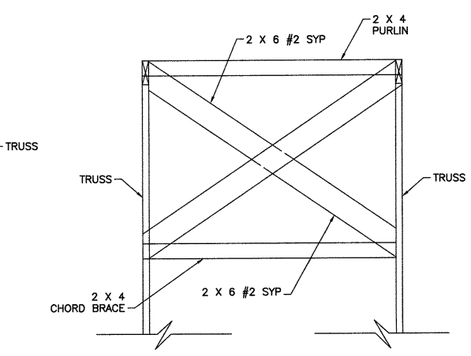

8 X-BRACE
NTS

STEPHEN D. LEPAGE NUMBER E-028319
3/7/09

NO.	DATE	REVISION DESCRIPTION	BY	NO.

STORAGE BUILDING MISSOURI DEPARTMENT OF TRANSPORTATION

SHEET NO. D-1
PROJECT NO. -
DRAWING NO. -
SCALE AS SHOWN
DATE 5/5/09

150' X 50' BUILDING DETAILS

APPROVED SDL
CHECKED CJL
DRAWN SDL
DESIGNED SDL
SURVEYED N/A

Central Missouri Engineering
CME
CENTRAL MISSOURI ENGINEERING
6909 Route M
Jefferson City, Missouri 65101
Telephone: (573) 338-3909
Facsimile: (573) 395-3301

Missouri
Division of Labor Standards

WAGE AND HOUR SECTION

JEREMIAH W. (JAY) NIXON, Governor

Annual Wage Order No. 17

Section 084

POLK COUNTY

In accordance with Section 290.262 RSMo 2000, within thirty (30) days after a certified copy of this Annual Wage Order has been filed with the Secretary of State as indicated below, any person who may be affected by this Annual Wage Order may object by filing an objection in triplicate with the Labor and Industrial Relations Commission, P.O. Box 599, Jefferson City, MO 65102-0599. Such objections must set forth in writing the specific grounds of objection. Each objection shall certify that a copy has been furnished to the Division of Labor Standards, P.O. Box 449, Jefferson City, MO 65102-0449 pursuant to 8 CSR 20-5.010(1). A certified copy of the Annual Wage Order has been filed with the Secretary of State of Missouri.

Original Signed by
Carla Buschjost, Director
Division of Labor Standards

This Is A True And Accurate Copy Which Was Filed With The Secretary of State: **March 10, 2010**

Last Date Objections May Be Filed: **April 9, 2010**

Prepared by Missouri Department of Labor and Industrial Relations

CCUPATIONAL TITLE	Date of Increase	*	Hourly Rates	Time Schedule	Holiday Schedule	Total Fringe Benefits
s Worker			$16.50	FED		$4.98
aker			$32.31	57	7	$21.79
ers-Stone Mason	1/11		$27.42	24	74	$14.38
er	4/10		$23.33	61	4	$11.35
Mason			$21.41	64	4	$9.12
an (Inside Wireman)			$23.93	21	48	$11.17 + 10%
nication Technician			$15.60	FED		$8.86
Constructor	1/11	a	$40.860	26	54	$23.178
g Engineer						
I			$23.78	84	4	$11.00
II			$22.19	84	4	$11.00
III			$21.49	84	4	$11.00
III-A			$22.19	84	4	$11.00
IV						
V			$14.27	84	4	$11.00
er	11/10		$26.75	19	1	$14.07
	9/10		$20.80	36	52	$5.86
(Building):						
al			$19.45	112	4	$9.45
emi-Skilled			$21.08	112	4	$9.45
d Semi-Skilled			$20.13	112	4	$9.45
			USE CARPENTER RATE			
n Layer & Cutter	4/10		$23.33	123	78	$11.35
Mason			$20.62	124	74	$12.03
nt	4/10		$23.58	61	4	$11.35
rker	4/10		$25.00	50	4	$22.90
	4/10		$19.26	7	14	$11.49
r			$21.65	64	4	$9.34
	11/10		$26.75	19	1	$14.07
er	4/10		$23.58	61	4	$11.35
	4/10		$21.11	10	2	$7.52
etal Worker			$25.91	4	24	$12.64
r Fitter	4/10		$30.84	33	19	$16.95
Worker			$27.48	124	74	$13.60
er			$20.62	124	74	$12.03
river-Teamster						
I	4/10		$19.45	98	4	$4.72
II						
III	4/10		$19.45	98	4	$4.72
IV	4/10		$19.45	98	4	$4.72
ontrol Service Driver			$16.35	48	49	$2.75
-Acetylene & Electric		*				

enefit Percentage is of the Basic Hourly Rate

n Workers: If you are not being paid the appropriate wage rate and fringe benefits contact the Division Standards at (573) 751-3403.

I Incremental Increase

OCCUPATIONAL TITLE	Effective Date of Increase	Basic Hourly Rates	Over-Time Schedule	Holiday Schedule	Total Fringe Benefits

* Welders receive rate prescribed for the occupational title performing operation to which welding is incidental.

Use Building Construction Rates on Building construction in accordance with the classifications of construction work established in 8 CSR 30-3.040(2).

Use Heavy Construction Rates on Highway and Heavy construction in accordance with the classifications of construction work established in 8 CSR 30-3.040(3).

a - Vacation: Employees over 5 years - 8%, under 5 years - 6%

POLK COUNTY
OVERTIME SCHEDULE - BUILDING CONSTRUCTION

FED: Minimum requirement per Fair Labor Standards Act means time and one-half (1 ½) shall be paid for all work in excess of forty (40) hours per work week.

NO. 4: Means the regular working day shall consist of eight (8) hours labor on the job between six (6) a.m. and six-thirty (6:30) p.m. and the regular working week shall consist of five (5) consecutive eight (8) hour days beginning with Monday and ending with Friday of each week. All full time or part time labor performed during such hours shall be recognized as regular working hours and paid for at the regular hourly rate. All work performed outside the regular working hours and performed during the regular work week and Saturday work, shall be paid at one & one-half (1½) times the regular rate. All recognized holidays or days locally observed as such, and Sundays shall be paid at the double (2) time rate of pay. Also, there may be a 40-hour work week which would consist of ten (10) hours each day for Monday, Tuesday, Wednesday, Thursday or Friday.

NO. 7: Means work between the hours of 7:00 a.m. and 6:00 p.m. daily, Monday through Saturday, as assigned by the Employer shall be considered regular hours. Weekend work shall be paid at the rate of one and one-half (1 ½) times the regular rate of pay. Weekend begins 12:01a.m. Saturday. Overtime is time worked over forty (40) hours per pay period, and shall be paid at the rate of one and one-half (1½) times the regular rate of pay. Sunday and Holidays will be paid at the rate of two (2) times the regular rate of pay.

NO. 10: Means the regular working day shall be scheduled to consist of at least eight (8) hours but no more than ten (10) consecutive hours, exclusive of the lunch period, unless otherwise provided. Crews shall be scheduled to commence at any time between the hours of 5:00 a.m. and 10:00 a.m. or earlier if agreed on by the majority of any one crew. Except as specifically provided for Saturdays, Sundays and holidays, all work performed by Employees anywhere in excess of forty (40) hours in one (1) work week, or in excess of ten (10) hours in one work day shall be paid at the rate of one and one-half (1½) times the regular hourly wage scale. Any work performed on a Saturday shall be paid at the rate of one and one-half (1½) times the regular hourly wage scale unless such Saturday work falls under the category of Saturday make Up Day. When this Saturday Make Up Day does occur, the Employee may work on Saturday at straight time; provided, however, if during the period worked by said Employee on Saturday, the Employee's compensable time at the straight time rate exceeds forty (40) hours, all time worked in excess of the forty (40) hours will be paid at the rate of one and one-half (1½) time the regular hourly wage scale. The provision of this Saturday Make Up Day shall not apply to any weeks in which a designated holiday is recognized. Any work performed by Employees anywhere on Sunday or holidays shall be paid at the rate of double (2) time the regular wage scale.

NO. 19: Means eight (8) hours of work, between 8:00 a.m. and 4:30 p.m., shall constitute a day's work. Forty (40) hours of work Monday through Friday shall constitute a workweek. The starting time may be changed to begin between the hours of six (6:00) and ten (10:00) a.m. The normal workweek may be changed to four (4) ten (10) hour days, with the following provisions: Monday through Thursday would be the normal workweek with Friday being used as scheduled workday in case of a day being lost time due to weather, any hours worked before, or after, established starting and quitting times being paid at double (2) time hourly rates of pay. The first two (2) hours performed in excess of an eight (8) hour workday, Monday through Friday, and the first ten (10) hours on Saturday, shall be paid at time and one-half (1½) the basic straight-time rate. All work performed on Sundays and holidays, and in excess of ten (10) hours a day shall be paid at double (2) the basic straight-time rate of pay.

NO. 21: Means eight (8) hours of work between the hours of 8:00 a.m. and 4:30 p.m. shall constitute a work day. Forty (40) hours within five (5) days, Monday through Friday, shall constitute a work week. The regular starting time of a job may be moved not more than two (2) hours prior to 8:00 a.m. However, in no case shall more than eight (8) hours be worked per day without the applicable overtime rate being paid. When job conditions dictate, the Employer shall be allowed to establish a four (4) day, ten (10) hours per day work week. This work week is defined as Monday through Thursday or Tuesday through Friday. All hours worked in excess of ten (10) hours per day or forty (40) hours per week shall be paid at the applicable overtime rate. This language is not intended to change the normal five (5) day, eight (8) hour per day work week. All overtime work performed after the regularly scheduled working hours Monday through Friday and Saturday shall be paid for at time and one-half (1½) the regular straight time rate of pay. Sundays and recognized holidays shall be paid for at two (2) times the straight time rate of pay. Shift work performed between the hours of 4:30 p.m. and 1:00 a.m. (second shift) shall receive eight (8) hours pay at the regular hourly rate of pay plus 17.3% for all hours worked. Shift work performed between the hours of 12:30 a.m. and 9:00 a.m. (third shift) shall receive eight (8) hours pay at the regular hourly rate of pay plus 31.4% for all hours worked. An unpaid lunch period of thirty (30) minutes shall be allowed on each shift. All overtime work required before the established start time and after the completion of eight (8) hours of any shift shall be paid at one and one-half (1½) times the shift hourly rate.

NO. 24: Means eight (8) hours shall constitute a day's work on all classes of work between the hours of 6:00 a.m. and 5:30 p.m., Monday through Friday. The pay for time worked during these hours shall be at the regular wage rate. The regular workweek shall be Monday through Friday. A workweek of four (4), ten (10) hour days may be established on a per job basis. Saturday may be used for a make-up day, when working 5-8's, Friday when working 4-10's. All time worked before and after the established workday of eight (8) hours, Monday through Friday, and all time worked on Saturday shall be paid for at the rate of time and one-half (1½) except after eight (8) hours worked, then double (2) time will apply. All time worked on Sundays and the recognized holidays shall be paid at the rate of double (2) time.

NO. 26: Means that the regular working day shall consist of eight (8) hours worked between 6:00 a.m., and 5:00 p.m., five (5) days per week, Monday to Friday, inclusive. Hours of work at each jobsite shall be those established by the general contractor and worked by the majority of trades. (The above working hours may be changed by mutual agreement). Work performed on Construction Work on Saturdays, Sundays and before and after the regular working day on Monday to Friday, inclusive, shall be classified as overtime, and paid for at double (2) the rate of single time. The employer may establish hours worked on a jobsite for a four (4) ten (10) hour day work week at straight time pay for construction work; the regular working day shall consist of ten (10) hours worked consecutively, between 6:00 a.m. and 6:00 p.m., four (4) days per week, Monday to Thursday, inclusive. Any work performed on Friday, Saturday, Sunday and holidays, and before and after the regular working day on Monday to Thursday where a four (4) ten (10) hour day workweek has been established, will be paid at two times (2) the single time rate of pay. The rate of pay for all work performed on holidays shall be at two times (2) the single time rate of pay.

NO. 33: Means the standard work day and week shall be eight (8) consecutive hours of work between the hours of 6:00 a.m. and 6:00 p.m., excluding the lunch period Monday through Friday, or shall conform to the practice on the job site. Four (4) days at ten (10) hours a day may be worked at straight time, Monday through Friday and need not be consecutive. All overtime, except for Sundays and holidays shall be at the rate of time and one-half (1½). Overtime worked on Sundays and holidays shall be at double (2) time.

NO. 36: Means eight (8) hours shall constitute a work day, Monday through Friday between the hours of 6:00 a.m. and 6:00 p.m. Saturday can be used as a makeup day if time is lost due to weather. All hours in excess of the regular forty (40) hour work week or eight (8) hours per day shall be considered overtime and shall be paid for at the rate of one and one-half (1½) times the regular rate. Employees will be paid at the rate of one and one-half (1½) times their regular rate for work performed on Saturdays. Sundays and holidays worked are to be paid at double (2) the regular hourly rate. Four (4) ten-hour days, at the option of the Employer, shall be the standard work week, consisting of a consecutive ten-hour period, Monday through Thursday or Tuesday through Friday, between the hours of 6:00 a.m. and 6:00 p.m. Forty (40) hours per week shall constitute a week's work.

NO. 48: Means the regularly scheduled work week shall be five (5) consecutive days, Monday through Friday or Tuesday through Saturday. Eight (8) hours shall constitute a day's work. Starting time shall not be earlier than 7:00 a.m. nor later than 10:00 a.m. Forty (40) hours shall constitute a week's work. Overtime at the rate of time and one-half (1½) will be paid for all work in excess of forty (40) hours in any one work week. On the Monday through Friday schedule, all work performed on Saturday will be time and one-half (1½) unless time has been lost during the week, in which case Saturday will be a make up day to the extent of the lost time. On the Tuesday through Saturday schedule, all work performed on Monday will be time and one-half (1½) unless time has been lost during the week, in which case Monday will be a make-up day to the extent of the lost time. Any work performed on Sunday will be double (2) time. If employees work on any of the recognized holidays, they shall be paid time and one-half (1½) their regular rate of pay for all hours worked.

NO. 50: Means eight (8) hours constitute a normal day's work Monday through Friday. Any time worked over eight (8) hours will normally be paid at time and one-half (1½) except for exclusions stated in some following additional sentences. The Employer, at his discretion, may start the work day between 6:00 a.m. and 9:00 a.m. Any schedule chosen shall be started at the beginning of the work week (Monday) and used for at least five days. Work may be scheduled on a four (4) days a week (Monday through Thursday) at ten (10) hours a day schedule. If such a schedule is employed, then Friday may be used as a make-up day when time is lost due to inclement weather. Time and one-half (1½) shall be paid for any work in excess of eight (8) hours in any regular work day Monday through Friday unless working 4-10's, then time and one-half (1½) after ten (10) hours. All work performed on Saturday will be time and one-half (1½). Double (2) time shall be paid for all work on Sundays and recognized holidays.

POLK COUNTY
OVERTIME SCHEDULE - BUILDING CONSTRUCTION

NO. 57: Means eight (8) hours per day shall constitute a day's work and forty (40) hours per week, Monday through Friday, shall constitute a week's work. The regular starting time shall be 8:00 a.m. The above may be changed by mutual consent of authorized personnel. When circumstances warrant, the Employer may change the regular workweek to four (4) ten-hour days at the regular time rate of pay. It being understood that all other pertinent information must be adjusted accordingly. All time worked before and after the established workday of eight (8) hours, Monday through Friday, all time worked on Saturday, shall be paid at the rate of time and one-half (1½) except in cases where work is part of an employee's regular Friday shift. All time worked on Sunday and recognized holidays shall be paid at the double (2) time rate of pay.

NO. 61: Means except as herein provided, eight (8) hours a day, 8:00 a.m. to 4:30 p.m., shall constitute a standard work day, and forty (40) hours per week shall constitute a week's work. The regular workday starting time of 8:00 a.m. (and resulting quitting time of 4:30 p.m.) may be moved forward to 6:00 a.m. or delayed one (1) hour to 9:00 a.m. All time worked outside of the standard work day and on Saturday shall be classified as overtime and paid the rate of time and one-half (1½). All time worked on Sunday and holidays shall be classified as overtime and paid at the rate of double (2) time. The Employer has the option of working either five (5) eight-hour days or four (4) ten-hour days to constitute a normal forty (40) hour work week. When the four (4) day ten hour work week is in effect, the standard work week shall consist of forty (40) hours, Monday through Friday, which will consist of any four (4) consecutive ten-hour four days within the five (5) day period. In the event the job is down for any reason beyond the control of the Employer, then Friday and/or Saturday may, at the option of the Employer, be worked as a make-up day, straight time not to exceed ten (10) hours per day, or forty (40) hours per week. When the five (5) day eight-hour work week is in effect, forty (40) hours per week shall constitute a week's work (normal work week being Monday through Friday). In the event the job is down for any reason beyond the control of the Employer, then Saturday may, at the option of the Employer, be worked as a make-up day, at straight time not to exceed eight (8) hours for that day, or forty (40) hours per week. A make-up day is not to be used to make up time lost due to recognized holidays.

NO. 64: Means eight (8) hours shall constitute a day's work beginning at 8:00 a.m. and ending at 4:30 p.m. Forty (40) hours shall constitute a week's work, Sunday through Saturday. In the event time is lost due to weather or conditions beyond the control of the Employer, the Employer may schedule work on Saturday at straight time. All work over eight (8) hours in one day, forty (40) hours in one week, or on Saturday (except as herein provided) shall be classified as overtime and be paid at the rate of time and one-half (1½). All work on Sunday or recognized holidays shall be classified as overtime and be paid at the rate of double (2) time. When the four (4) day ten-hour work week is in effect, the standard work day shall be consecutive ten (10) hour periods. Forty (40) hours per week shall constitute a week's work Sunday through Saturday inclusive. In the event the job is down for reasons beyond the contractors control, then Friday and/or Saturday may, at the option of the Employer be worked as a make-up day, straight time not to exceed ten (10) hours per day or forty (40) hours per week.

NO. 84: The regular working starting time of 8:00 a.m. (and resulting quitting time of 4:30 p.m.) may be moved forward to 6:00 a.m. or delayed one (1) hour to 9:00 a.m. Except as provided in this Article, eight (8) hours a day shall constitute a standard work day and forty (40) hours per week shall constitute a weeks' work, which shall begin on Sunday and end on Saturday. All time worked outside of the standard work day and on Saturday shall be classified as overtime and paid at the rate of time & one-half (1½) (except as herein provided). All time worked on Sunday and recognized holidays shall be classified as overtime and paid at the rate of double (2) time. The Employer has the option of working either five (5) eight-hour days or four (4) ten-hour days to constitute a normal forty (40) hour work week. When the four (4) ten-hour work week is in effect, the standard work day shall be consecutive ten (10) hour periods, exclusive of the lunch period, beginning at 6:30 a.m. and forty (40) hours per week shall constitute a week's work, Monday through Thursday, inclusive. In the event the job is down for any reason beyond the Employer's control, then Friday and/or Saturday may, at the option of the Employer, be worked as a make-up day, straight time not to exceed ten (10) hours or forty (40) hours per week. When the five (5) eight-hour work week is in effect, forty (40) hours per week shall constitute a week's work, Monday through Friday, inclusive. In the event the job is down for any reason beyond the Employer's control, then Saturday may, at the option of the Employer, be worked as a make-up day, straight time not to exceed eight (8) hours or forty (40) hours per week.

POLK COUNTY
OVERTIME SCHEDULE - BUILDING CONSTRUCTION

NO. 98: Means eight (8) hours a day shall constitute a standard work day, and forty (40) hours per week shall constitute a week's work which shall begin on Sunday and end on Saturday. All time worked outside of the standard work day and on Saturday shall be classified as overtime and paid the rate of time and one-half (1½) (except as herein provided). All time worked on Sunday and recognized holidays shall be classified as overtime and paid at the rate of double (2) time. The Employer has the option of working either five (5) eight-hour days or four (4) ten-hour days to constitute a normal forty (40) hour work week. When the four (4) ten-hour work week is in effect, the standard work day shall be consecutive ten (10) hour periods between the hours of 5:30 and 6:30 a.m. and 6:30 p.m. Forty (40) hours per week shall constitute a week's work, Monday through Thursday, inclusive. In the event the job is down for any reason beyond the Employer's control, then Friday and/or Saturday may, at the option of the Employer, be worked as a make-up day; straight time not to exceed ten (10) hours per day or forty (40) hours per week. When the five (5) day eight (8) hours work week is in effect forty (40) hours per week shall constitute a week's work, Monday through Friday, inclusive. In the event the job is down for any reason beyond the Employer's control, then Saturday may, at the option of the Employer, be worked as a make-up day; straight time not to exceed eight (8) hours per day or forty (40) hours per week. When the five (5) day eight (8) hour work week is in effect, starting time shall be between 7:00 a.m. and 8:00 a.m. All time worked before 7:00 a.m. shall be paid for at the rate of time and one-half (1½). All work performed on Saturday up to 6:00 p.m. (except as herein provided) shall be compensated for at the rate of time and one-half (1½). All time worked from 6:00 p.m. Saturday to 7:00 a.m. Monday will be paid for at the rate of double (2) time.

NO. 112: Means the regular starting time of 8:00 a.m. (and resulting quitting time of 4:30 p.m.) may be moved forward to 6:00 a.m. or delayed one (1) hour to 9:00 a.m. Except as provided for, eight (8) hours a day shall constitute a standard work day, and forty (40) hours per week shall constitute a week's work, which shall begin on Sunday and end on Saturday. All time worked outside of the standard work day and on Saturday shall be classified as overtime and paid the rate of time and one-half (1½) (except as herein provided). All time worked on Sunday and recognized holidays shall be classified as overtime and paid at the rate of double (2) time. The Employer has the option of working either five (5) eight (8) hour days or four (4) ten (10) hour days to constitute a normal forty (40) hour work week. When the four (4) ten-hour work week is in effect, the standard work day shall be consecutive ten hour periods between the hours of 6:30 a.m. and 6:30 p.m. Forty (40) hours per week shall constitute a week's work, Monday through Thursday, inclusive. In the event the job is down for any reason beyond the Employer's control, then Friday and/or Saturday may, at the option of the Employer, be worked as a make-up day; straight time not to exceed eight (8) hours or forty (40) hours per week.

NO. 123: Means except as provided, eight (8) hours a day (8:00 A.M. to 4:30 P.M.) shall constitute a standard work day, excluding the 30-minute lunch period, and forty (40) hours per week shall constitute a week's work. All time worked outside of the standard work day and on Saturday shall be classified as overtime and paid the rate of time and one-half (except as herein provided). All time worked on Sunday and herein named holidays shall be classified as overtime and paid at the rate of double time. The Employer has the option of working either five (5) eight-hour days or four (4) ten-hour days to constitute a normal forty (40) hour work week. When the four (4) day ten-hour work week is in effect, the standard work week shall consist of forty (40) hours, Monday through Friday, which will consist of any four (4) consecutive ten (10) hour days within the five day period. In the event the job is down for any reason beyond the control of the Employer, then Friday and/or Saturday may, at the option of the Employer, be worked as a make-up day, straight time not to exceed ten (10) hours or forty (40) hours per week. Starting time will be designated by the Employer. When the five (5) day eight (8) hour work week is in effect forty (40) hours per week will constitute a week's work (normal work week being Monday through Friday). In the event the job is down for any reason beyond the control of the Employer, then Saturday may, at the option of the Employer, be worked as a make-up day; at straight time not to exceed eight (8) hours or forty (40) hours per week.

NO. 124: Means eight (8) hours shall constitute a day's work on all classes of work between the hours of 6:00 a.m. and 5:30 p.m., Monday through Friday. The pay for time worked during these hours shall be at the regular wage rate. The regular workweek shall be Monday through Friday. Employment from 4:30 p.m. to 12:00 midnight, Monday through Friday, shall be paid for at one and one-half (1½) times the regular hourly rate. From 12:00 midnight until 8:00 a.m. on any day shall be paid for at twice the regular hourly rate. All time worked on Sundays and the recognized holidays shall be paid at the rate of double (2) time. It is understood that forty (40) hours shall constitute a regular workweek, (5-8's) Sunday Midnight through Friday Midnight, understanding anything over eight (8) hours is one and one-half (1½) times the hourly wage rate.

POLK COUNTY
HOLIDAY SCHEDULE – BUILDING CONSTRUCTION

NO. 1: All work done on New Year's Day, Memorial Day, Independence Day, Labor Day, Thanksgiving Day and Christmas Day shall be paid at the rate of double time. When one of the above holidays falls on Sunday, the following Monday shall be observed. When one of the above holidays falls on Saturday the preceding Friday shall be observed.

NO. 2: All work performed on New Year's Day, Memorial Day, Fourth of July, Labor Day, Thanksgiving Day, Christmas Day, or the days observed as such, shall be paid at the double time rate of pay.

NO. 4: All work done on New Year's Day, Memorial Day, Independence Day, Labor Day, Thanksgiving and Christmas Day shall be paid at the double time rate of pay. If any of the above holidays fall on Sunday, Monday will be observed as the recognized holiday. If any of the above holidays fall on Saturday, Friday will be observed as the recognized holiday.

NO. 7: The following days are assigned days and are recognized as holidays: New Year's Day, Memorial Day, Independence Day, Labor Day, Veteran's Day, Thanksgiving Day, and Christmas Day. If a holiday falls on a Sunday, it shall be observed on the following Monday. If a holiday falls on a Saturday, it shall be observed on the preceding Friday. No work shall be performed on Labor Day except in case of jeopardy to work under construction. This is applied to protect Labor Day. When a holiday falls during the normal workweek, Monday through Friday, it shall be counted as eight (8) hours toward the forty (40) hour week. However, no reimbursement for these eight (8) hours is too paid to the workman unless worked. If workman are required to work the above enumerated holidays or days observed as such, or on Sunday, they shall receive double (2) the regular rate of pay for such work.

NO. 14: Means the following days are recognized Holidays: Memorial Day, Fourth of July, Thanksgiving Day, Christmas Day, and New Year's Day. No work shall be done on Labor Day. When falling on a Sunday and the following Monday is observed as part of the holiday, then that Monday shall be considered a holiday. Sunday and Holidays will be paid at the rate of two (2) times the regular rate of pay.

NO. 19: All work done on New Year's Day, Memorial Day, July 4th, Labor Day, Thanksgiving Day, and Christmas Day shall be paid at the double time rate of pay. The employee may take off Friday following Thanksgiving Day. However, the employee shall notify his or her Foreman, General Foreman or Superintendent on the Wednesday preceding Thanksgiving Day. When one of the above holidays falls on Sunday, the following Monday shall be considered a holiday and all work performed on either day shall be at the double (2) time rate. When one of the holidays falls on Saturday, the preceding Friday shall be considered a holiday and all work performed on either day shall be at the double (2) time rate.

NO. 24: All work done on Christmas Day, Thanksgiving Day, New Year's Day, Memorial Day, Independence Day, Labor Day, Veteran's Day, Presidential Election Day or days locally observed as such, and Sunday shall be recognized as holidays and paid at the double time rate of pay.

NO. 48: All work performed on New Year's Day, Memorial Day, Fourth of July, Labor Day, Thanksgiving Day and Christmas Day shall be paid for at double (2) the straight-time rate of pay. Any one of the above-listed holidays falling on Sunday shall be observed on the following Monday and paid for at double (2) the straight-time rate of pay. Any of the above holidays falling on Saturday shall be observed on the previous Friday and paid at double (2) the straight-time rate of pay. Employees working on the Saturday will receive the standard pay for Saturday work.

NO. 49: The following days shall be observed as legal holidays: New Year's Day, Decoration Day, July 4th, Labor Day, Thanksgiving Day, Christmas Day, Employee's birthday and two (2) personal days. The observance of one (1) of the personal days to be limited to the time between December 1 and March 1 of the following year. If any of these holidays fall on Sunday, the following Monday will be observed as the holiday and if any of these holidays fall on Saturday, the preceding Friday will be observed as the holiday. If employees work on any of these holidays they shall be paid time & one-half (1½) their regular rate of pay for all hours worked.

NO. 52: All work performed on Memorial Day, Independence Day, Labor Day, Thanksgiving Day and Christmas Day shall receive the double (2) time rate of pay.

POLK COUNTY
HOLIDAY SCHEDULE – BUILDING CONSTRUCTION

NO. 54: All work performed on New Year's Day, Memorial Day, Independence Day, Labor Day, Veteran's Day, Thanksgiving Day, the Friday after Thanksgiving Day, and Christmas Day shall be paid at the double (2) time rate of pay. When a holiday falls on Saturday, it shall be observed on Friday. When a holiday falls on Sunday, it shall be observed on Monday.

NO. 74: All work performed on New Year's Day, Memorial Day, Fourth of July, Labor Day, Veteran's Day, Thanksgiving Day and Christmas Day, shall be paid at double (2) time of the hourly rate of pay. In the event one of the above holiday's falls on Saturday, the holiday shall be celebrated on Saturday. If the holiday falls on Sunday, the holiday will be celebrated on Monday.

NO. 78: The following days shall be recognized as holidays: New Year's Day, Memorial Day, Independence Day, Labor Day, Thanksgiving and Christmas. If any of the above holidays fall on Sunday, Monday will be observed as the legal holiday. If any of the above holidays fall on Saturday, Friday will be observed as the legal holiday. All time worked on Sunday and herein named holidays shall be classified as overtime and paid at the rate of double time.

OCCUPATIONAL TITLE	*Effective Date of Increase	Basic Hourly Rates	Over-Time Schedule	Holiday Schedule	Total Fringe Benefits
ARPENTER					
ɔurneymen	5/10	$27.62	7	16	$11.40
illwright	5/10	$27.62	7	16	$11.40
ile Driver Worker	5/10	$27.62	7	16	$11.40
PERATING ENGINEER					
roup I	5/10	$25.72	5	15	$11.55
roup II	5/10	$25.37	5	15	$11.55
roup III	5/10	$25.17	5	15	$11.55
roup IV	5/10	$23.12	5	15	$11.55
iler-Driver	5/10	$23.12	5	15	$11.55
ABORER					
eneral Laborer	5/10	$21.89	4	18	$9.89
killed Laborer	5/10	$22.44	4	18	$9.89
RUCK DRIVER-TEAMSTER					
roup I	5/10	$26.27	12	3	$9.85
roup II	5/10	$26.43	12	3	$9.85
roup III	5/10	$26.42	12	3	$9.85
roup IV	5/10	$26.54	12	3	$9.85

se Heavy Construction Rates on Highway and Heavy construction in accordance with the classifications of ɔnstruction work established in 8 CSR 30-3.040(3).

se Building Construction Rates on Building construction in accordance with the classifications of construction ɔrk established in 8 CSR 30-3.040(2).

a worker is performing work on a heavy construction project within an occupational title that is not listed on the eavy Construction Rate Sheet, use the rate for that occupational title as shown on the Building Construction Rate sheet.

POLK COUNTY
OVERTIME SCHEDULE – HEAVY CONSTRUCTION

FED: Minimum requirement per Fair Labor Standards Act means time and one-half (1 ½) shall be paid for all work in excess of forty (40) hours per work week.

NO. 4: Means a regular work week shall consist of not more than forty (40) hours of work, Monday through Saturday, and all work performed over and above ten (10) hours per day and forty (40) hours per week shall be paid at the rate of time & one-half (1½). Workers shall receive time and one-half (1½) for all work performed on Sundays and holidays. A work day is to begin between 6:00 a.m. and 9:00 a.m. at the option of the Employer except when inclement weather or other conditions beyond the reasonable control of the Employer prevent work, in which event, the starting time may be delayed, but not later then 12:00 noon. When a holiday falls during the normal work week, Monday through Friday, it shall be counted as eight (8) hours toward a forty (40) hour week; however, no reimbursement for this eight (8) hours is to be paid to the worker(s) unless worked.

NO. 5: Means a regular work week shall consist of not more that forty (40) hours work, Monday through Saturday, and all work performed over and above ten (10) hours per day and forty (40) hours per week shall be paid at the rate of time & one-half (1½). Workmen shall receive time and one-half (1½) for all work performed on Sundays and recognized holidays or days observed as such. Double (2) time shall be paid for work on Sunday or recognized holidays when and only if any other craft employees of the same employer at work on that same job site are receiving double (2) time pay for that Sunday or holiday. If a job can't work forty (40) hours, Monday through Saturday, because of inclement weather or other conditions beyond the control of the Employer, Friday and Saturday may be worked as make up days at straight time (if working 4-10's). Saturday may be worked as a make up day at straight time (if working 5-8's). Make up days shall not be utilized for days lost to holidays. A work day is to begin between 6:00 a.m. and 9:00 a.m. at the option of the Employer except when inclement weather or other conditions beyond the reasonable control of the Employer, including requirements of the owner, prevent work. In such event the starting time may be delayed but not later than 12:00 noon. Where one of the holidays falls or is observed during the work week, then all work performed over and above thirty-two (32) hours shall be paid at time & one-half (1½).

NO. 7: Means the regular work week shall start on Monday and end on Friday, except where the Employer elects to work Monday through Thursday, ten (10) hours per day. All work over ten (10) hours in a day or forty (40) hours in a week shall be at the overtime rate of one and one-half (1½) times the regular hourly rate. The regular work day shall be either eight (8) or ten (10) hours. If a job can't work forty (40) hours Monday through Friday because of inclement weather or other conditions beyond the control of the Employer, Friday or Saturday may be worked as a make-up day at straight time (if working 4-10's). Saturday may be worked as a make-up day at straight time (if working 5-8's). Make-up days shall not be utilized for days lost due to holidays. A workday is to begin at the option of the Employer but not later than 11:00 a.m. except when inclement weather, requirements of the owner or other conditions beyond the reasonable control of the Employer prevent work. Except as worked as a make-up day, time on Saturday shall be worked at one and one-half (1½) times the regular rate. Work performed on Sunday shall be paid at two (2) times the regular rate. Work performed on recognized holidays or days observed as such, shall also be paid at the double (2) time rate of pay.

NO. 12: Means a regular work week shall consist of not more than forty (40) hours of work and all work performed over and above ten (10) hours per day and forty (40) hours per week shall be paid at the rate of time & one-half (1½). A workday is to begin between 6:00 a.m. and 9:00 a.m. at the option of the Employer except when inclement weather or other conditions beyond the reasonable control of the Employer, in which event, the starting time may be advanced or delayed. Workers shall receive time and one-half (1½) for all work performed on recognized holidays or days observed as such.

POLK COUNTY
HOLIDAY SCHEDULE – HEAVY CONSTRUCTION

NO. 3: The following days are recognized as holidays: New Year's Day, Memorial Day, Independence Day, Labor Day, Thanksgiving Day and Christmas Day. If a holiday falls on a Sunday, it shall be observed on the following Monday. No work shall be performed on Labor Day except in case of jeopardy to work under construction. This rule is applied to protect Labor Day. When a holiday falls during the normal work week, Monday through Friday, it shall be counted as eight (8) hours toward the forty (40) hour week; however, no reimbursement for this eight (8) hours is to be paid to the workmen unless worked. An Employer working a four (4) day, ten (10) hour schedule may use Friday as a make up day when an observed holiday occurs during the work week. Employees have the option to work that make up day. If workmen are required to work the above enumerated holidays, or days observed as such, they shall receive time & one-half (1½) the regular rate of pay for such work.

NO. 15: The following days are recognized as holidays: New Year's Day, Memorial Day, July Fourth, Labor Day, Thanksgiving Day and Christmas Day. If a holiday falls on Sunday, it shall be observed on the following Monday. If a holiday falls on Saturday, it shall be observed on the preceding Friday. No work shall be performed on Labor Day except in case of jeopardy to work under construction. This rule is applied to protect Labor Day. If workmen are required to work the above enumerated holidays or days observed as such, they shall receive time and one-half (1½) the regular rate of pay for such work. Where one of the holidays specified falls or is observed during the workweek, then all work performed over and above thirty-two (32) hours in that week shall be paid at the rate of time and one-half (1½). Workmen shall receive time and one-half (1 ½) for all work performed on Sundays. Double (2) time shall be paid for work on Sunday or recognized holidays when and only if any other craft employees of the same employer at work on that same job site are receiving double (2) time for that Sunday or holiday.

NO. 16: The following days are recognized as holidays: New Year's Day, Memorial Day, Fourth of July, Labor Day, Thanksgiving Day and Christmas Day. If a holiday falls on Sunday, it shall be observed on the following Monday. If a holiday falls on Saturday, it shall be observed on the preceding Friday. No work shall be performed on Labor Day except in case of jeopardy to work under construction. This rule is applied to protect Labor Day. When a holiday falls during the normal work week, Monday through Friday, it shall be counted as eight (8) hours toward the forty (40) hour week; however, no reimbursement for this eight (8) hours is to be paid to the worker unless worked. If workers are required to work the above recognized holidays or days observed as such, they shall receive double (2) the regular rate of pay for such work.

NO. 18: All work performed on New Year's Day, Memorial Day, Independence Day, Labor Day, Thanksgiving Day and Christmas Day shall be paid at the time and one-half (1½) rate of pay. If a holiday falls on Sunday, it shall be observed on the following Monday. If a holiday falls on Saturday, it shall be observed on the preceding Friday. No work shall be performed on Labor Day except in case of jeopardy to work under construction. This rule is applied to protect Labor Day. When a holiday falls during the normal work week, Monday through Friday, it shall be counted as eight (8) hours toward a forty (40) hour week; however no reimbursement for this eight (8) hours is to be paid to the working person(s) unless the holiday is worked.

REPLACEMENT PAGE

OUTSIDE ELECTRICIAN

These rates are to be used for the following counties:

Andrew, Atchison, Barry, Barton, Buchanan, Caldwell, Cedar, Christian, Clinton, Dade, Dallas, Daviess, DeKalb, Douglas, Gentry, Greene, Grundy, Harrison, Hickory, Holt, Jasper, Laclede, Lawrence, Livingston, McDonald, Mercer, Newton, Nodaway, Ozark, Polk, St. Clair, Stone, Taney, Vernon, Webster, Worth, and Wright

COMMERCIAL WORK

Occupational Title	Basic Hourly Rate	Total Fringe Benefits
*Journeyman Lineman	$37.10	$5.00 + 34.5%
*Lineman Operator	$35.12	$5.00 + 34.5%
*Groundman	$23.98	$5.00 + 34.5%

UTILITY WORK

Occupational Title	Basic Hourly Rate	Total Fringe Benefits
*Journeyman Lineman	$36.53	$5.00 + 34.5%
*Lineman Operator	$33.76	$5.00 + 34.5%
*Groundman	$23.54	$5.00 + 34.5%

OVERTIME RATE: Eight (8) hours of work between the hours of 8:00 a.m. and 4:30 p.m. shall constitute a work day. Forty (40) hours within the five (5) days, Monday through Friday inclusive, shall constitute the work week. Starting time may be adjusted not to exceed two (2) hours. Work performed outside of the aforementioned will be paid at the applicable overtime rate. When starting time has been adjusted, all other provisions concerning the work day shall be adjusted accordingly. The overtime rate of pay shall be one and one-half (1½) times the regular rate of wages, other than on Sundays, holidays and from Midnight until 6:00 a.m., which will be paid at double (2) the straight time rate.

HOLIDAY RATE: Work performed on New Year's Day, Memorial Day, Fourth of July, Labor Day, Thanksgiving Day, Christmas Day, or days celebrated as such, shall be paid at the double time rate of pay. If the holiday falls on Saturday, it will be observed on Friday; if the holiday falls on Sunday, it will be observed on Monday, and shall be paid for at double (2) the regular straight time rate of pay.

*Annual Incremental Increase

Missouri
Division of Labor Standards

WAGE AND HOUR SECTION

JEREMIAH W. (JAY) NIXON, Governor

Annual Wage Order No. 17

Section 030

DALLAS COUNTY

In accordance with Section 290.262 RSMo 2000, within thirty (30) days after a certified copy of this Annual Wage Order has been filed with the Secretary of State as indicated below, any person who may be affected by this Annual Wage Order may object by filing an objection in triplicate with the Labor and Industrial Relations Commission, P.O. Box 599, Jefferson City, MO 65102-0599. Such objections must set forth in writing the specific grounds of objection. Each objection shall certify that a copy has been furnished to the Division of Labor Standards, P.O. Box 449, Jefferson City, MO 65102-0449 pursuant to 8 CSR 20-5.010(1). A certified copy of the Annual Wage Order has been filed with the Secretary of State of Missouri.

Original Signed by
Carla Buschjost, Director
Division of Labor Standards

This Is A True And Accurate Copy Which Was Filed With The Secretary of State: **March 10, 2010**

Last Date Objections May Be Filed: **April 9, 2010**

Prepared by Missouri Department of Labor and Industrial Relations

CUPATIONAL TITLE	Date of Increase	*	Hourly Rates	Time Schedule	Holiday Schedule	Total Fringe Benefits
Worker			$23.72	56	28	$10.50
ker			$32.31	57	7	$21.79
rs-Stone Mason	1/11		$27.42	24	74	$14.38
r	4/10		$23.33	61	4	$11.35
Mason			$21.41	64	4	$9.12
n (Inside Wireman)			$23.93	21	48	$11.17 + 10%
cation Technician			USE ELECTRICIAN (INSIDE WIREMAN) RATE			
Constructor	1/11	a	$40.860	26	54	$23.178
l Engineer						
			$23.78	84	4	$11.00
			$22.19	84	4	$11.00
l			$21.49	84	4	$11.00
l-A			$22.19	84	4	$11.00
/						
			$14.27	84	4	$11.00
r	11/10		$26.75	19	1	$14.07
	9/10		$20.80	36	52	$5.86
Building):						
			$19.45	112	4	$9.45
mi-Skilled			$21.08	112	4	$9.45
Semi-Skilled			$20.13	112	4	$9.45
			USE CARPENTER RATE			
Layer & Cutter	4/10		$23.33	123	78	$11.35
ason			$20.62	124	74	$12.03
	4/10		$23.58	61	4	$11.35
ker	4/10		$25.00	50	4	$22.90
	4/10		$19.26	7	14	$11.49
			$21.65	64	4	$9.34
	11/10		$26.75	19	1	$14.07
r	4/10		$23.58	61	4	$11.35
	4/10		$21.11	10	2	$7.52
tal Worker			$25.91	4	24	$12.64
Fitter	4/10		$30.84	33	19	$16.95
Worker			$27.48	124	74	$13.60
r			$20.62	124	74	$12.03
ver-Teamster						
	4/10		$19.45	98	4	$4.72
l	4/10		$19.45	98	4	$4.72
/	4/10		$19.45	98	4	$4.72
ntrol Service Driver			$16.35	48	49	$2.75
Acetylene & Electric		*				

nefit Percentage is of the Basic Hourly Rate

Workers: If you are not being paid the appropriate wage rate and fringe benefits contact the Division Standards at (573) 751-3403.

Incremental Increase

OCCUPATIONAL TITLE	*Effective Date of Increase	Basic Hourly Rates	Over-Time Schedule	Holiday Schedule	Total Fringe Benefits

* Welders receive rate prescribed for the occupational title performing operation to which welding is incidental.

Use Building Construction Rates on Building construction in accordance with the classifications of construction work established in 8 CSR 30-3.040(2).

Use Heavy Construction Rates on Highway and Heavy construction in accordance with the classifications of construction work established in 8 CSR 30-3.040(3).

a - Vacation: Employees over 5 years - 8%; Employees under 5 years - 6%

DALLAS COUNTY
OVERTIME SCHEDULE - BUILDING CONSTRUCTION

FED: Minimum requirement per Fair Labor Standards Act means time and one-half (1 ½) shall be paid for all work in excess of forty (40) hours per work week.

NO. 4: Means the regular working day shall consist of eight (8) hours labor on the job between six (6) a.m. and six-thirty (6:30) p.m. and the regular working week shall consist of five (5) consecutive eight (8) hour days beginning with Monday and ending with Friday of each week. All full time or part time labor performed during such hours shall be recognized as regular working hours and paid for at the regular hourly rate. All work performed outside the regular working hours and performed during the regular work week and Saturday work, shall be paid at one & one-half (1½) times the regular rate. All recognized holidays or days locally observed as such, and Sundays shall be paid at the double (2) time rate of pay. Also, there may be a 40-hour work week which would consist of ten (10) hours each day for Monday, Tuesday, Wednesday, Thursday or Friday.

NO. 7: Means work between the hours of 7:00 a.m. and 6:00 p.m. daily, Monday through Saturday, as assigned by the Employer shall be considered regular hours. Weekend work shall be paid at the rate of one and one-half (1 ½) times the regular rate of pay. Weekend begins 12:01a.m. Saturday. Overtime is time worked over forty (40) hours per pay period, and shall be paid at the rate of one and one-half (1½) times the regular rate of pay. Sunday and Holidays will be paid at the rate of two (2) times the regular rate of pay.

NO. 10: Means the regular working day shall be scheduled to consist of at least eight (8) hours but no more than ten (10) consecutive hours, exclusive of the lunch period, unless otherwise provided. Crews shall be scheduled to commence at any time between the hours of 5:00 a.m. and 10:00 a.m. or earlier if agreed on by the majority of any one crew. Except as specifically provided for Saturdays, Sundays and holidays, all work performed by Employees anywhere in excess of forty (40) hours in one (1) work week, or in excess of ten (10) hours in one work day shall be paid at the rate of one and one-half (1½) times the regular hourly wage scale. Any work performed on a Saturday shall be paid at the rate of one and one-half (1½) times the regular hourly wage scale unless such Saturday work falls under the category of Saturday make Up Day. When this Saturday Make Up Day does occur, the Employee may work on Saturday at straight time; provided, however, if during the period worked by said Employee on Saturday, the Employee's compensable time at the straight time rate exceeds forty (40) hours, all time worked in excess of the forty (40) hours will be paid at the rate of one and one-half (1½) time the regular hourly wage scale. The provision of this Saturday Make Up Day shall not apply to any weeks in which a designated holiday is recognized. Any work performed by Employees anywhere on Sunday or holidays shall be paid at the rate of double (2) time the regular wage scale.

NO. 19: Means eight (8) hours of work, between 8:00 a.m. and 4:30 p.m., shall constitute a day's work. Forty (40) hours of work Monday through Friday shall constitute a workweek. The starting time may be changed to begin between the hours of six (6:00) and ten (10:00) a.m. The normal workweek may be changed to four (4) ten (10) hour days, with the following provisions: Monday through Thursday would be the normal workweek with Friday being used as scheduled workday in case of a day being lost time due to weather, any hours worked before, or after, established starting and quitting times being paid at double (2) time hourly rates of pay. The first two (2) hours performed in excess of an eight (8) hour workday, Monday through Friday, and the first ten (10) hours on Saturday, shall be paid at time and one-half (1½) the basic straight-time rate. All work performed on Sundays and holidays, and in excess of ten (10) hours a day shall be paid at double (2) the basic straight-time rate of pay.

NO. 21: Means eight (8) hours of work between the hours of 8:00 a.m. and 4:30 p.m. shall constitute a work day. Forty (40) hours within five (5) days, Monday through Friday, shall constitute a work week. The regular starting time of a job may be moved not more than two (2) hours prior to 8:00 a.m. However, in no case shall more than eight (8) hours be worked per day without the applicable overtime rate being paid. When job conditions dictate, the Employer shall be allowed to establish a four (4) day, ten (10) hours per day work week. This work week is defined as Monday through Thursday or Tuesday through Friday. All hours worked in excess of ten (10) hours per day or forty (40) hours per week shall be paid at the applicable overtime rate. This language is not intended to change the normal five (5) day, eight (8) hour per day work week. All overtime work performed after the regularly scheduled working hours Monday through Friday and Saturday shall be paid for at time and one-half (1½) the regular straight time rate of pay. Sundays and recognized holidays shall be paid for at two (2) times the straight time rate of pay. Shift work performed between the hours of 4:30 p.m. and 1:00 a.m. (second shift) shall receive eight (8) hours pay at the regular hourly rate of pay plus 17.3% for all hours worked. Shift work performed between the hours of 12:30 a.m. and 9:00 a.m. (third shift) shall receive eight (8) hours pay at the regular hourly rate of pay plus 31.4% for all hours worked. An unpaid lunch period of thirty (30) minutes shall be allowed on each shift. All overtime work required before the established start time and after the completion of eight (8) hours of any shift shall be paid at one and one-half (1½) times the shift hourly rate.

NO. 24: Means eight (8) hours shall constitute a day's work on all classes of work between the hours of 6:00 a.m. and 5:30 p.m., Monday through Friday. The pay for time worked during these hours shall be at the regular wage rate. The regular workweek shall be Monday through Friday. A workweek of four (4), ten (10) hour days may be established on a per job basis. Saturday may be used for a make-up day, when working 5-8's, Friday when working 4-10's. All time worked before and after the established workday of eight (8) hours, Monday through Friday, and all time worked on Saturday shall be paid for at the rate of time and one-half (1½) except after eight (8) hours worked, then double (2) time will apply. All time worked on Sundays and the recognized holidays shall be paid at the rate of double (2) time.

NO. 26: Means that the regular working day shall consist of eight (8) hours worked between 6:00 a.m., and 5:00 p.m., five (5) days per week, Monday to Friday, inclusive. Hours of work at each jobsite shall be those established by the general contractor and worked by the majority of trades. (The above working hours may be changed by mutual agreement). Work performed on Construction Work on Saturdays, Sundays and before and after the regular working day on Monday to Friday, inclusive, shall be classified as overtime, and paid for at double (2) the rate of single time. The employer may establish hours worked on a jobsite for a four (4) ten (10) hour day work week at straight time pay for construction work; the regular working day shall consist of ten (10) hours worked consecutively, between 6:00 a.m. and 6:00 p.m., four (4) days per week, Monday to Thursday, inclusive. Any work performed on Friday, Saturday, Sunday and holidays, and before and after the regular working day on Monday to Thursday where a four (4) ten (10) hour day workweek has been established, will be paid at two times (2) the single time rate of pay. The rate of pay for all work performed on holidays shall be at two times (2) the single time rate of pay.

NO. 33: Means the standard work day and week shall be eight (8) consecutive hours of work between the hours of 6:00 a.m. and 6:00 p.m., excluding the lunch period Monday through Friday, or shall conform to the practice on the job site. Four (4) days at ten (10) hours a day may be worked at straight time, Monday through Friday and need not be consecutive. All overtime, except for Sundays and holidays shall be at the rate of time and one-half (1½). Overtime worked on Sundays and holidays shall be at double (2) time.

NO. 36: Means eight (8) hours shall constitute a work day, Monday through Friday between the hours of 6:00 a.m. and 6:00 p.m. Saturday can be used as a makeup day if time is lost due to weather. All hours in excess of the regular forty (40) hour work week or eight (8) hours per day shall be considered overtime and shall be paid for at the rate of one and one-half (1½) times the regular rate. Employees will be paid at the rate of one and one-half (1½) times their regular rate for work performed on Saturdays. Sundays and holidays worked are to be paid at double (2) the regular hourly rate. Four (4) ten-hour days, at the option of the Employer, shall be the standard work week, consisting of a consecutive ten-hour period, Monday through Thursday or Tuesday through Friday, between the hours of 6:00 a.m. and 6:00 p.m. Forty (40) hours per week shall constitute a week's work.

NO. 48: Means the regularly scheduled work week shall be five (5) consecutive days, Monday through Friday or Tuesday through Saturday. Eight (8) hours shall constitute a day's work. Starting time shall not be earlier than 7:00 a.m. nor later than 10:00 a.m. Forty (40) hours shall constitute a week's work. Overtime at the rate of time and one-half (1½) will be paid for all work in excess of forty (40) hours in any one work week. On the Monday through Friday schedule, all work performed on Saturday will be time and one-half (1½) unless time has been lost during the week, in which case Saturday will be a make up day to the extent of the lost time. On the Tuesday through Saturday schedule, all work performed on Monday will be time and one-half (1½) unless time has been lost during the week, in which case Monday will be a make-up day to the extent of the lost time. Any work performed on Sunday will be double (2) time. If employees work on any of the recognized holidays, they shall be paid time and one-half (1½) their regular rate of pay for all hours worked.

NO. 50: Means eight (8) hours constitute a normal day's work Monday through Friday. Any time worked over eight (8) hours will normally be paid at time and one-half (1½) except for exclusions stated in some following additional sentences. The Employer, at his discretion, may start the work day between 6:00 a.m. and 9:00 a.m. Any schedule chosen shall be started at the beginning of the work week (Monday) and used for at least five days. Work may be scheduled on a four (4) days a week (Monday through Thursday) at ten (10) hours a day schedule. If such a schedule is employed, then Friday may be used as a make-up day when time is lost due to inclement weather. Time and one-half (1½) shall be paid for any work in excess of eight (8) hours in any regular work day Monday through Friday unless working 4-10's, then time and one-half (1½) after ten (10) hours. All work performed on Saturday will be time and one-half (1½). Double (2) time shall be paid for all work on Sundays and recognized holidays.

NO 56: Means the regular work day shall consist of eight (8) hours between 8:00 a.m. and 4:30 p.m. An optional four day work week may be utilized with the ten (10) hour clause, days Monday through Thursday or Tuesday through Friday. Work hours shall be from 7:00 a.m. to 5:30 p.m. any work performed on Monday or Friday outside the regular scheduled four (4) days shall be at one and one half (1 ½) the regular rate of pay. Work performed outside of the regular work day, and on Saturdays shall be paid at one and one half (1 ½) the regular rate of pay. Sundays and holidays shall be paid at double (2) time the regular rate of pay.

NO. 57: Means eight (8) hours per day shall constitute a day's work and forty (40) hours per week, Monday through Friday, shall constitute a week's work. The regular starting time shall be 8:00 a.m. The above may be changed by mutual consent of authorized personnel. When circumstances warrant, the Employer may change the regular workweek to four (4) ten-hour days at the regular time rate of pay. It being understood that all other pertinent information must be adjusted accordingly. All time worked before and after the established workday of eight (8) hours, Monday through Friday, all time worked on Saturday, shall be paid at the rate of time and one-half (1½) except in cases where work is part of an employee's regular Friday shift. All time worked on Sunday and recognized holidays shall be paid at the double (2) time rate of pay.

NO. 61: Means except as herein provided, eight (8) hours a day, 8:00 a.m. to 4:30 p.m., shall constitute a standard work day, and forty (40) hours per week shall constitute a week's work. The regular workday starting time of 8:00 a.m. (and resulting quitting time of 4:30 p.m.) may be moved forward to 6:00 a.m. or delayed one (1) hour to 9:00 a.m. All time worked outside of the standard work day and on Saturday shall be classified as overtime and paid the rate of time and one-half (1½). All time worked on Sunday and holidays shall be classified as overtime and paid at the rate of double (2) time. The Employer has the option of working either five (5) eight-hour days or four (4) ten-hour days to constitute a normal forty (40) hour work week. When the four (4) day ten hour work week is in effect, the standard work week shall consist of forty (40) hours, Monday through Friday, which will consist of any four (4) consecutive ten-hour four days within the five (5) day period. In the event the job is down for any reason beyond the control of the Employer, then Friday and/or Saturday may, at the option of the Employer, be worked as a make-up day, straight time not to exceed ten (10) hours per day, or forty (40) hours per week. When the five (5) day eight-hour work week is in effect, forty (40) hours per week shall constitute a week's work (normal work week being Monday through Friday). In the event the job is down for any reason beyond the control of the Employer, then Saturday may, at the option of the Employer, be worked as a make-up day, at straight time not to exceed eight (8) hours for that day, or forty (40) hours per week. A make-up day is not to be used to make up time lost due to recognized holidays.

NO. 64: Means eight (8) hours shall constitute a day's work beginning at 8:00 a.m. and ending at 4:30 p.m. Forty (40) hours shall constitute a week's work, Sunday through Saturday. In the event time is lost due to weather or conditions beyond the control of the Employer, the Employer may schedule work on Saturday at straight time. All work over eight (8) hours in one day, forty (40) hours in one week, or on Saturday (except as herein provided) shall be classified as overtime and be paid at the rate of time and one-half (1½). All work on Sunday or recognized holidays shall be classified as overtime and be paid at the rate of double (2) time. When the four (4) day ten-hour work week is in effect, the standard work day shall be consecutive ten (10) hour periods. Forty (40) hours per week shall constitute a week's work Sunday through Saturday inclusive. In the event the job is down for reasons beyond the contractors control, then Friday and/or Saturday may, at the option of the Employer be worked as a make-up day, straight time not to exceed ten (10) hours per day or forty (40) hours per week.

NO. 84: The regular working starting time of 8:00 a.m. (and resulting quitting time of 4:30 p.m.) may be moved forward to 6:00 a.m. or delayed one (1) hour to 9:00 a.m. Except as provided in this Article, eight (8) hours a day shall constitute a standard work day and forty (40) hours per week shall constitute a weeks' work, which shall begin on Sunday and end on Saturday. All time worked outside of the standard work day and on Saturday shall be classified as overtime and paid at the rate of time & one-half (1½) (except as herein provided). All time worked on Sunday and recognized holidays shall be classified as overtime and paid at the rate of double (2) time. The Employer has the option of working either five (5) eight-hour days or four (4) ten-hour days to constitute a normal forty (40) hour work week. When the four (4) ten-hour work week is in effect, the standard work day shall be consecutive ten (10) hour periods, exclusive of the lunch period, beginning at 6:30 a.m. and forty (40) hours per week shall constitute a week's work, Monday through Thursday, inclusive. In the event the job is down for any reason beyond the Employer's control, then Friday and/or Saturday may, at the option of the Employer, be worked as a make-up day, straight time not to exceed ten (10) hours or forty (40) hours per week. When the five (5) eight-hour work week is in effect, forty (40) hours per week shall constitute a week's work, Monday through Friday, inclusive. In the event the job is down for any reason beyond the Employer's control, then Saturday may, at the option of the Employer, be worked as a make-up day, straight time not to exceed eight (8) hours or forty (40) hours per week.

NO. 98: Means eight (8) hours a day shall constitute a standard work day, and forty (40) hours per week shall constitute a week's work which shall begin on Sunday and end on Saturday. All time worked outside of the standard work day and on Saturday shall be classified as overtime and paid the rate of time and one-half (1½) (except as herein provided). All time worked on Sunday and recognized holidays shall be classified as overtime and paid at the rate of double (2) time. The Employer has the option of working either five (5) eight-hour days or four (4) ten-hour days to constitute a normal forty (40) hour work week. When the four (4) ten-hour work week is in effect, the standard work day shall be consecutive ten (10) hour periods between the hours of 5:30 and 6:30 a.m. and 6:30 p.m. Forty (40) hours per week shall constitute a week's work, Monday through Thursday, inclusive. In the event the job is down for any reason beyond the Employer's control, then Friday and/or Saturday may, at the option of the Employer, be worked as a make-up day; straight time not to exceed ten (10) hours per day or forty (40) hours per week. When the five (5) day eight (8) hours work week is in effect forty (40) hours per week shall constitute a week's work, Monday through Friday, inclusive. In the event the job is down for any reason beyond the Employer's control, then Saturday may, at the option of the Employer, be worked as a make-up day; straight time not to exceed eight (8) hours per day or forty (40) hours per week. When the five (5) day eight (8) hour work week is in effect, starting time shall be between 7:00 a.m. and 8:00 a.m. All time worked before 7:00 a.m. shall be paid for at the rate of time and one-half (1½). All work performed on Saturday up to 6:00 p.m. (except as herein provided) shall be compensated for at the rate of time and one-half (1½). All time worked from 6:00 p.m. Saturday to 7:00 a.m. Monday will be paid for at the rate of double (2) time.

NO. 112: Means the regular starting time of 8:00 a.m. (and resulting quitting time of 4:30 p.m.) may be moved forward to 6:00 a.m. or delayed one (1) hour to 9:00 a.m. Except as provided for, eight (8) hours a day shall constitute a standard work day, and forty (40) hours per week shall constitute a week's work, which shall begin on Sunday and end on Saturday. All time worked outside of the standard work day and on Saturday shall be classified as overtime and paid the rate of time and one-half (1½) (except as herein provided). All time worked on Sunday and recognized holidays shall be classified as overtime and paid at the rate of double (2) time. The Employer has the option of working either five (5) eight (8) hour days or four (4) ten (10) hour days to constitute a normal forty (40) hour work week. When the four (4) ten-hour work week is in effect, the standard work day shall be consecutive ten hour periods between the hours of 6:30 a.m. and 6:30 p.m. Forty (40) hours per week shall constitute a week's work, Monday through Thursday, inclusive. In the event the job is down for any reason beyond the Employer's control, then Friday and/or Saturday may, at the option of the Employer, be worked as a make-up day; straight time not to exceed eight (8) hours or forty (40) hours per week.

NO. 123: Means except as provided, eight (8) hours a day (8:00 A.M. to 4:30 P.M.) shall constitute a standard work day, excluding the 30-minute lunch period, and forty (40) hours per week shall constitute a week's work. All time worked outside of the standard work day and on Saturday shall be classified as overtime and paid the rate of time and one-half (except as herein provided). All time worked on Sunday and herein named holidays shall be classified as overtime and paid at the rate of double time. The Employer has the option of working either five (5) eight-hour days or four (4) ten-hour days to constitute a normal forty (40) hour work week. When the four (4) day ten-hour work week is in effect, the standard work week shall consist of forty (40) hours, Monday through Friday, which will consist of any four (4) consecutive ten (10) hour days within the five day period. In the event the job is down for any reason beyond the control of the Employer, then Friday and/or Saturday may, at the option of the Employer, be worked as a make-up day, straight time not to exceed ten (10) hours or forty (40) hours per week. Starting time will be designated by the Employer. When the five (5) day eight (8) hour work week is in effect forty (40) hours per week will constitute a week's work (normal work week being Monday through Friday). In the event the job is down for any reason beyond the control of the Employer, then Saturday may, at the option of the Employer, be worked as a make-up day; at straight time not to exceed eight (8) hours or forty (40) hours per week.

NO. 124: Means eight (8) hours shall constitute a day's work on all classes of work between the hours of 6:00 a.m. and 5:30 p.m., Monday through Friday. The pay for time worked during these hours shall be at the regular wage rate. The regular workweek shall be Monday through Friday. Employment from 4:30 p.m. to 12:00 midnight, Monday through Friday, shall be paid for at one and one-half (1½) times the regular hourly rate. From 12:00 midnight until 8:00 a.m. on any day shall be paid for at twice the regular hourly rate. All time worked on Sundays and the recognized holidays shall be paid at the rate of double (2) time. It is understood that forty (40) hours shall constitute a regular workweek, (5-8's) Sunday Midnight through Friday Midnight, understanding anything over eight (8) hours is one and one-half (1½) times the hourly wage rate.

DALLAS COUNTY
HOLIDAY SCHEDULE – BUILDING CONSTRUCTION

NO. 1: All work done on New Year's Day, Memorial Day, Independence Day, Labor Day, Thanksgiving Day and Christmas Day shall be paid at the rate of double time. When one of the above holidays falls on Sunday, the following Monday shall be observed. When one of the above holidays falls on Saturday the preceding Friday shall be observed.

NO. 2: All work performed on New Year's Day, Memorial Day, Fourth of July, Labor Day, Thanksgiving Day, Christmas Day, or the days observed as such, shall be paid at the double time rate of pay.

NO. 4: All work done on New Year's Day, Memorial Day, Independence Day, Labor Day, Thanksgiving and Christmas Day shall be paid at the double time rate of pay. If any of the above holidays fall on Sunday, Monday will be observed as the recognized holiday. If any of the above holidays fall on Saturday, Friday will be observed as the recognized holiday.

NO. 7: The following days are assigned days and are recognized as holidays: New Year's Day, Memorial Day, Independence Day, Labor Day, Veteran's Day, Thanksgiving Day, and Christmas Day. If a holiday falls on a Sunday, it shall be observed on the following Monday. If a holiday falls on a Saturday, it shall be observed on the preceding Friday. No work shall be performed on Labor Day except in case of jeopardy to work under construction. This is applied to protect Labor Day. When a holiday falls during the normal workweek, Monday through Friday, it shall be counted as eight (8) hours toward the forty (40) hour week. However, no reimbursement for this eight (8) hours is too paid to the workman unless worked. If workman are required to work the above enumerated holidays or days observed as such, or on Sunday, they shall receive double (2) the regular rate of pay for such work.

NO. 14: Means the following days are recognized Holidays: Memorial Day, Fourth of July, Thanksgiving Day, Christmas Day, and New Year's Day. No work shall be done on Labor Day. When falling on a Sunday and the following Monday is observed as part of the holiday, then that Monday shall be considered a holiday. Sunday and Holidays will be paid at the rate of two (2) times the regular rate of pay.

NO. 19: All work done on New Year's Day, Memorial Day, July 4th, Labor Day, Thanksgiving Day, and Christmas Day shall be paid at the double time rate of pay. The employee may take off Friday following Thanksgiving Day. However, the employee shall notify his or her Foreman, General Foreman or Superintendent on the Wednesday preceding Thanksgiving Day. When one of the above holidays falls on Sunday, the following Monday shall be considered a holiday and all work performed on either day shall be at the double (2) time rate. When one of the holidays falls on Saturday, the preceding Friday shall be considered a holiday and all work performed on either day shall be at the double (2) time rate.

NO. 24: All work done on Christmas Day, Thanksgiving Day, New Year's Day, Memorial Day, Independence Day, Labor Day, Veteran's Day, Presidential Election Day or days locally observed as such, and Sunday shall be recognized as holidays and paid at the double time rate of pay.

NO. 28: All work done on New Year's Day, Veteran's Day, Memorial Day, Independence Day, Thanksgiving Day and Christmas Day shall be paid at the double time rate of pay. No work shall be performed on Labor Day except when triple (3) time is paid. When a holiday falls on Sunday, the following Monday shall be observed as the holiday.

NO. 48: All work performed on New Year's Day, Memorial Day, Fourth of July, Labor Day, Thanksgiving Day and Christmas Day shall be paid for at double (2) the straight-time rate of pay. Any one of the above-listed holidays falling on Sunday shall be observed on the following Monday and paid for at double (2) the straight-time rate of pay. Any of the above holidays falling on Saturday shall be observed on the previous Friday and paid at double (2) the straight-time rate of pay. Employees working on the Saturday will receive the standard pay for Saturday work.

NO. 49: The following days shall be observed as legal holidays: New Year's Day, Decoration Day, July 4th, Labor Day, Thanksgiving Day, Christmas Day, Employee's birthday and two (2) personal days. The observance of one (1) of the personal days to be limited to the time between December 1 and March 1 of the following year. If any of these holidays fall on Sunday, the following Monday will be observed as the holiday and if any of these holidays fall on Saturday, the preceding Friday will be observed as the holiday. If employees work on any of these holidays they shall be paid time & one-half (1½) their regular rate of pay for all hours worked.

DALLAS COUNTY
HOLIDAY SCHEDULE – BUILDING CONSTRUCTION

NO. 52: All work performed on Memorial Day, Independence Day, Labor Day, Thanksgiving Day and Christmas Day shall receive the double (2) time rate of pay.

NO. 54: All work performed on New Year's Day, Memorial Day, Independence Day, Labor Day, Veteran's Day, Thanksgiving Day, the Friday after Thanksgiving Day, and Christmas Day shall be paid at the double (2) time rate of pay. When a holiday falls on Saturday, it shall be observed on Friday. When a holiday falls on Sunday, it shall be observed on Monday.

NO. 74: All work performed on New Year's Day, Memorial Day, Fourth of July, Labor Day, Veteran's Day, Thanksgiving Day and Christmas Day, shall be paid at double (2) time of the hourly rate of pay. In the event one of the above holiday's falls on Saturday, the holiday shall be celebrated on Saturday. If the holiday falls on Sunday, the holiday will be celebrated on Monday.

NO. 78: The following days shall be recognized as holidays: New Year's Day, Memorial Day, Independence Day, Labor Day, Thanksgiving and Christmas. If any of the above holidays fall on Sunday, Monday will be observed as the legal holiday. If any of the above holidays fall on Saturday, Friday will be observed as the legal holiday. All time worked on Sunday and herein named holidays shall be classified as overtime and paid at the rate of double time.

OCCUPATIONAL TITLE	*Effective Date of Increase	Basic Hourly Rates	Over-Time Schedule	Holiday Schedule	Total Fringe Benefits
CARPENTER					
Journeymen	5/10	$27.62	7	16	$11.40
Millwright	5/10	$27.62	7	16	$11.40
Pile Driver Worker	5/10	$27.62	7	16	$11.40
OPERATING ENGINEER					
Group I	5/10	$25.72	5	15	$11.55
Group II	5/10	$25.37	5	15	$11.55
Group III	5/10	$25.17	5	15	$11.55
Group IV	5/10	$23.12	5	15	$11.55
Oiler-Driver	5/10	$23.12	5	15	$11.55
LABORER					
General Laborer	5/10	$21.89	4	18	$9.89
Skilled Laborer	5/10	$22.44	4	18	$9.89
TRUCK DRIVER-TEAMSTER					
Group I	5/10	$26.27	12	3	$9.85
Group II	5/10	$26.43	12	3	$9.85
Group III	5/10	$26.42	12	3	$9.85
Group IV	5/10	$26.54	12	3	$9.85

Use Heavy Construction Rates on Highway and Heavy construction in accordance with the classifications of construction work established in 8 CSR 30-3.040(3).

Use Building Construction Rates on Building construction in accordance with the classifications of construction work established in 8 CSR 30-3.040(2).

If a worker is performing work on a heavy construction project within an occupational title that is not listed on the Heavy Construction Rate Sheet, use the rate for that occupational title as shown on the Building Construction Rate sheet.

DALLAS COUNTY
OVERTIME SCHEDULE – HEAVY CONSTRUCTION

FED: Minimum requirement per Fair Labor Standards Act means time and one-half (1 ½) shall be paid for all work in excess of forty (40) hours per work week.

NO. 4: Means a regular work week shall consist of not more than forty (40) hours of work, Monday through Saturday, and all work performed over and above ten (10) hours per day and forty (40) hours per week shall be paid at the rate of time & one-half (1½). Workers shall receive time and one-half (1½) for all work performed on Sundays and holidays. A work day is to begin between 6:00 a.m. and 9:00 a.m. at the option of the Employer except when inclement weather or other conditions beyond the reasonable control of the Employer prevent work, in which event, the starting time may be delayed, but not later then 12:00 noon. When a holiday falls during the normal work week, Monday through Friday, it shall be counted as eight (8) hours toward a forty (40) hour week; however, no reimbursement for this eight (8) hours is to be paid to the worker(s) unless worked.

NO. 5: Means a regular work week shall consist of not more that forty (40) hours work, Monday through Saturday, and all work performed over and above ten (10) hours per day and forty (40) hours per week shall be paid at the rate of time & one-half (1½). Workmen shall receive time and one-half (1½) for all work performed on Sundays and recognized holidays or days observed as such. Double (2) time shall be paid for work on Sunday or recognized holidays when and only if any other craft employees of the same employer at work on that same job site are receiving double (2) time pay for that Sunday or holiday. If a job can't work forty (40) hours, Monday through Saturday, because of inclement weather or other conditions beyond the control of the Employer, Friday and Saturday may be worked as make up days at straight time (if working 4-10's). Saturday may be worked as a make up day at straight time (if working 5-8's). Make up days shall not be utilized for days lost to holidays. A work day is to begin between 6:00 a.m. and 9:00 a.m. at the option of the Employer except when inclement weather or other conditions beyond the reasonable control of the Employer, including requirements of the owner, prevent work. In such event the starting time may be delayed but not later than 12:00 noon. Where one of the holidays falls or is observed during the work week, then all work performed over and above thirty-two (32) hours shall be paid at time & one-half (1½).

NO. 7: Means the regular work week shall start on Monday and end on Friday, except where the Employer elects to work Monday through Thursday, ten (10) hours per day. All work over ten (10) hours in a day or forty (40) hours in a week shall be at the overtime rate of one and one-half (1½) times the regular hourly rate. The regular work day shall be either eight (8) or ten (10) hours. If a job can't work forty (40) hours Monday through Friday because of inclement weather or other conditions beyond the control of the Employer, Friday or Saturday may be worked as a make-up day at straight time (if working 4-10's). Saturday may be worked as a make-up day at straight time (if working 5-8's). Make-up days shall not be utilized for days lost due to holidays. A workday is to begin at the option of the Employer but not later than 11:00 a.m. except when inclement weather, requirements of the owner or other conditions beyond the reasonable control of the Employer prevent work. Except as worked as a make-up day, time on Saturday shall be worked at one and one-half (1½) times the regular rate. Work performed on Sunday shall be paid at two (2) times the regular rate. Work performed on recognized holidays or days observed as such, shall also be paid at the double (2) time rate of pay.

NO. 12: Means a regular work week shall consist of not more than forty (40) hours of work and all work performed over and above ten (10) hours per day and forty (40) hours per week shall be paid at the rate of time & one-half (1½). A workday is to begin between 6:00 a.m. and 9:00 a.m. at the option of the Employer except when inclement weather or other conditions beyond the reasonable control of the Employer, in which event, the starting time may be advanced or delayed. Workers shall receive time and one-half (1½) for all work performed on recognized holidays or days observed as such.

DALLAS COUNTY
HOLIDAY SCHEDULE – HEAVY CONSTRUCTION

NO. 3: The following days are recognized as holidays: New Year's Day, Memorial Day, Independence Day, Labor Day, Thanksgiving Day and Christmas Day. If a holiday falls on a Sunday, it shall be observed on the following Monday. No work shall be performed on Labor Day except in case of jeopardy to work under construction. This rule is applied to protect Labor Day. When a holiday falls during the normal work week, Monday through Friday, it shall be counted as eight (8) hours toward the forty (40) hour week; however, no reimbursement for this eight (8) hours is to be paid to the workmen unless worked. An Employer working a four (4) day, ten (10) hour schedule may use Friday as a make up day when an observed holiday occurs during the work week. Employees have the option to work that make up day. If workmen are required to work the above enumerated holidays, or days observed as such, they shall receive time & one-half (1½) the regular rate of pay for such work.

NO. 15: The following days are recognized as holidays: New Year's Day, Memorial Day, July Fourth, Labor Day, Thanksgiving Day and Christmas Day. If a holiday falls on Sunday, it shall be observed on the following Monday. If a holiday falls on Saturday, it shall be observed on the preceding Friday. No work shall be performed on Labor Day except in case of jeopardy to work under construction. This rule is applied to protect Labor Day. If workmen are required to work the above enumerated holidays or days observed as such, they shall receive time and one-half (1½) the regular rate of pay for such work. Where one of the holidays specified falls or is observed during the workweek, then all work performed over and above thirty-two (32) hours in that week shall be paid at the rate of time and one-half (1½). Workmen shall receive time and one-half (1 ½) for all work performed on Sundays. Double (2) time shall be paid for work on Sunday or recognized holidays when and only if any other craft employees of the same employer at work on that same job site are receiving double (2) time for that Sunday or holiday.

NO. 16: The following days are recognized as holidays: New Year's Day, Memorial Day, Fourth of July, Labor Day, Thanksgiving Day and Christmas Day. If a holiday falls on Sunday, it shall be observed on the following Monday. If a holiday falls on Saturday, it shall be observed on the preceding Friday. No work shall be performed on Labor Day except in case of jeopardy to work under construction. This rule is applied to protect Labor Day. When a holiday falls during the normal work week, Monday through Friday, it shall be counted as eight (8) hours toward the forty (40) hour week; however, no reimbursement for this eight (8) hours is to be paid to the worker unless worked. If workers are required to work the above recognized holidays or days observed as such, they shall receive double (2) the regular rate of pay for such work.

NO. 18: All work performed on New Year's Day, Memorial Day, Independence Day, Labor Day, Thanksgiving Day and Christmas Day shall be paid at the time and one-half (1½) rate of pay. If a holiday falls on Sunday, it shall be observed on the following Monday. If a holiday falls on Saturday, it shall be observed on the preceding Friday. No work shall be performed on Labor Day except in case of jeopardy to work under construction. This rule is applied to protect Labor Day. When a holiday falls during the normal work week, Monday through Friday, it shall be counted as eight (8) hours toward a forty (40) hour week; however no reimbursement for this eight (8) hours is to be paid to the working person(s) unless the holiday is worked.

REPLACEMENT PAGE

OUTSIDE ELECTRICIAN

These rates are to be used for the following counties:

Andrew, Atchison, Barry, Barton, Buchanan, Caldwell, Cedar, Christian, Clinton, Dade, Dallas, Daviess, DeKalb, Douglas, Gentry, Greene, Grundy, Harrison, Hickory, Holt, Jasper, Laclede, Lawrence, Livingston, McDonald, Mercer, Newton, Nodaway, Ozark, Polk, St. Clair, Stone, Taney, Vernon, Webster, Worth, and Wright

COMMERCIAL WORK

Occupational Title	Basic	Total
	Hourly	Fringe
	Rate	Benefits
*Journeyman Lineman	$37.10	$5.00 + 34.5%
*Lineman Operator	$35.12	$5.00 + 34.5%
*Groundman	$23.98	$5.00 + 34.5%

UTILITY WORK

Occupational Title	Basic	Total
	Hourly	Fringe
	Rate	Benefits
*Journeyman Lineman	$36.53	$5.00 + 34.5%
*Lineman Operator	$33.76	$5.00 + 34.5%
*Groundman	$23.54	$5.00 + 34.5%

OVERTIME RATE: Eight (8) hours of work between the hours of 8:00 a.m. and 4:30 p.m. shall constitute a work day. Forty (40) hours within the five (5) days, Monday through Friday inclusive, shall constitute the work week. Starting time may be adjusted not to exceed two (2) hours. Work performed outside of the aforementioned will be paid at the applicable overtime rate. When starting time has been adjusted, all other provisions concerning the work day shall be adjusted accordingly. The overtime rate of pay shall be one and one-half (1½) times the regular rate of wages, other than on Sundays, holidays and from Midnight until 6:00 a.m., which will be paid at double (2) the straight time rate.

HOLIDAY RATE: Work performed on New Year's Day, Memorial Day, Fourth of July, Labor Day, Thanksgiving Day, Christmas Day, or days celebrated as such, shall be paid at the double time rate of pay. If the holiday falls on Saturday, it will be observed on Friday; if the holiday falls on Sunday, it will be observed on Monday, and shall be paid for at double (2) the regular straight time rate of pay.

*Annual Incremental Increase