DESIGN DESIGNATION

A.A.D.T. - 2009 = 17,037

V = 35 M.P.H.

FUNCTIONAL CLASSIFICATION- PRINCIPAL ARTERIAL (MAJOR ROUTE)

NO RIGHT OF WAY WILL BE ACQUIRED FOR THIS PROJECT.

CONVENTIONAL SYMBOLS

(USED IN PLANS)

	EXISTING	NEW
BUILDINGS AND STRUCTURES		
GUARD RAIL		
CONCRETE RIGHT-OF-WAY MARKER		
STEEL RIGHT-OF-WAY MARKER		
LOCATION SURVEY MARKER		
UTILITIES		
FIBER OPTICS	-FO-	-FO-
OVERHEAD TELEPHONE		
UNDERGROUND TELEPHONE	-T-	-T-
OVERHEAD POWER		
UNDERGROUND POWER	-P-	-P-
GAS	-G-	-G-
WATER	-W-	-W-
MANHOLE	SAN	
FIRE HYDRANT	HYD	
WATER VALVE	WV	
WATER METER	WM	
DROP INLET	DI	
DITCH BLOCK		
GROUND MOUNTED SIGN	SIGN	
LIGHT POLE		
H-FRAME POWER POLE		
TELEPHONE PEDESTAL	PED	
FENCE		
CHAIN LINK	V	
WOVEN WIRE	X	
GATE POST		
BENCHMARK	BM	

NOTE: DASHED OR OPEN SYMBOLS INDICATE EXISTING FEATURES

MISSOURI HIGHWAYS AND TRANSPORTATION COMMISSION

PLANS FOR PROPOSED

STATE HIGHWAY

LACLEDE COUNTY

CITY OF LEBANON

FINAL PLANS

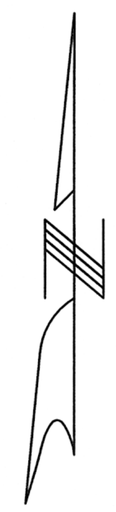

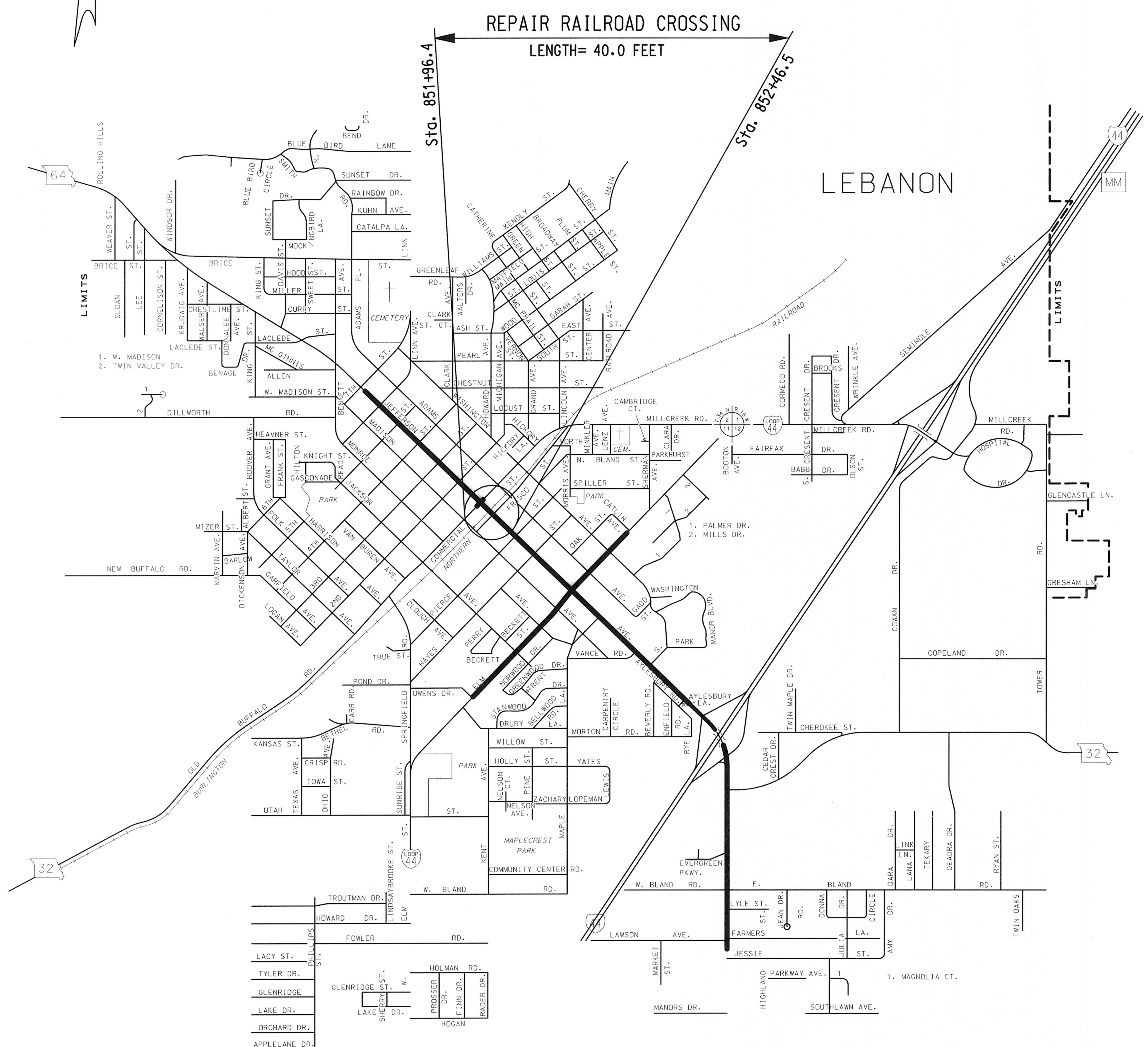

INDEX OF SHEETS

DESCRIPTION	SHEET NUMBER
TITLE SHEET ----------------------	1
TYPICAL SECTIONS (TS) (03 SHEETS)--	2
QUANTITIES (QU) (01 SHEET)---------	3
PLAN-PROFILE (PP)------------------	4
TRAFFIC CONTROL SHEETS (TC)--------	5

LENGTH OF PROJECT

BEGINNING OF PROJECT	STA. 851+96.4	
END OF PROJECT	STA. 852+46.5	
APPARENT LENGTH	50.1	FEET

EQUATIONS AND EXCEPTIONS:

EXCEPTIONS: STA. 852+04.4 TO STA. 852+14.5

TOTAL CORRECTIONS	-10.1	FEET
NET LENGTH OF PROJECT	40.0	FEET
STATE LENGTH	0.008	MILES

STATE OF MISSOURI
KIRK E. JURANAS
NUMBER E-22818
REGISTERED PROFESSIONAL ENGINEER

8-27-10

DATE PREPARED	8/27/2010
ROUTE	5
STATE	MO
DISTRICT	8
SHEET NO.	1
COUNTY	LACLEDE
JOB NO.	
CONTRACT ID.	D8PP-11007
PROJECT NO.	
BRIDGE NO.	

DATE	DESCRIPTION

MISSOURI HIGHWAYS AND TRANSPORTATION COMMISSION
105 WEST CAPITOL
JEFFERSON CITY, MO 65102
1-888-ASK-MODOT (1-888-275-6636)

IF A SEAL IS PRESENT ON THIS SHEET IT HAS BEEN ELECTRONICALLY SEALED AND DATED.

REV.

← NORTHBOUND

TYPICAL PROFILE SECTION
ROUTE 5
NO VERTICAL EXAGGERATION

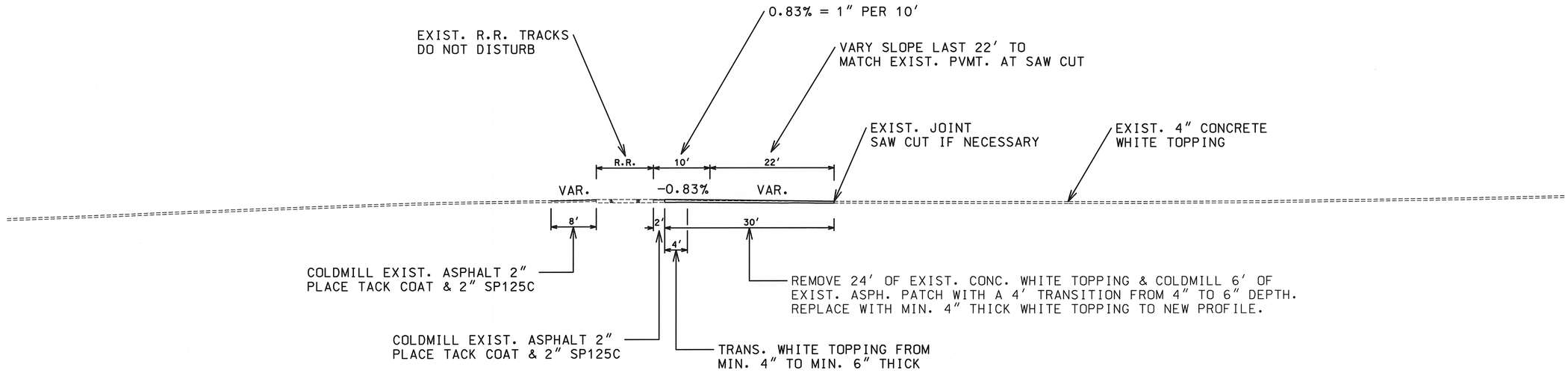

← NORTHBOUND

TYPICAL PROFILE SECTION
ROUTE 5
10:1 VERTICAL EXAGGERATION

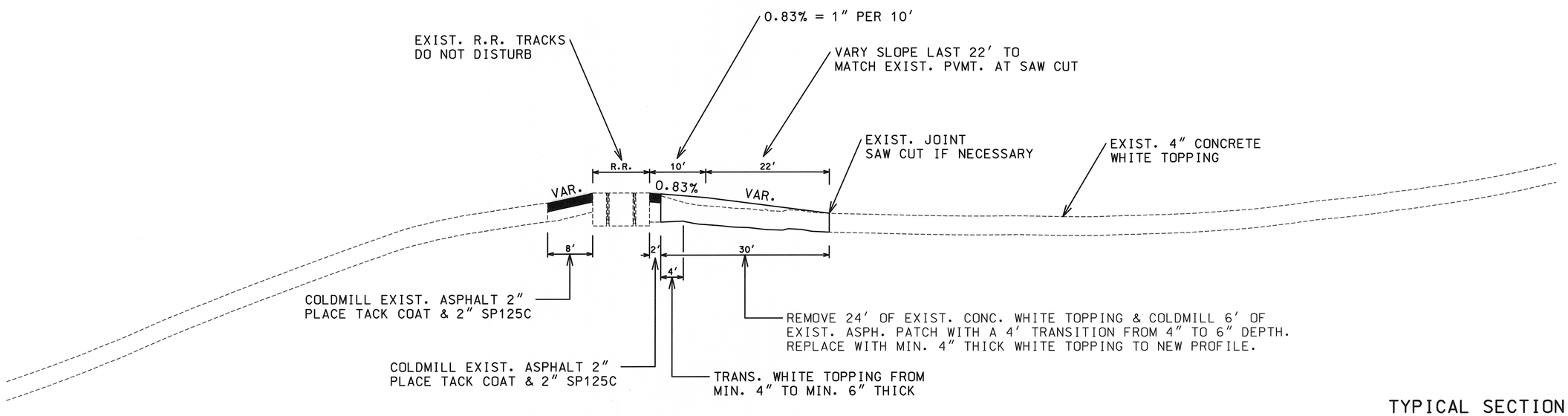

TYPICAL SECTION

SHEET 1 OF 3

STATE OF MISSOURI
KIRK E. JURANAS
NUMBER E-22812
REGISTERED PROFESSIONAL ENGINEER
8-27-10

DATE PREPARED	8/27/2010
ROUTE	STATE
5	MO
DISTRICT	SHEET NO.
8	2
COUNTY	LACLEDE
JOB NO.	
CONTRACT ID.	D8PP-11007
PROJECT NO.	
BRIDGE NO.	

DATE	DESCRIPTION

IF A SEAL IS PRESENT ON THIS SHEET, IT HAS BEEN ELECTRONICALLY SEALED AND DATED.

MISSOURI HIGHWAYS AND TRANSPORTATION COMMISSION
105 WEST CAPITOL
JEFFERSON CITY, MO 65102
1-888-ASK-MODOT (1-888-275-6636)

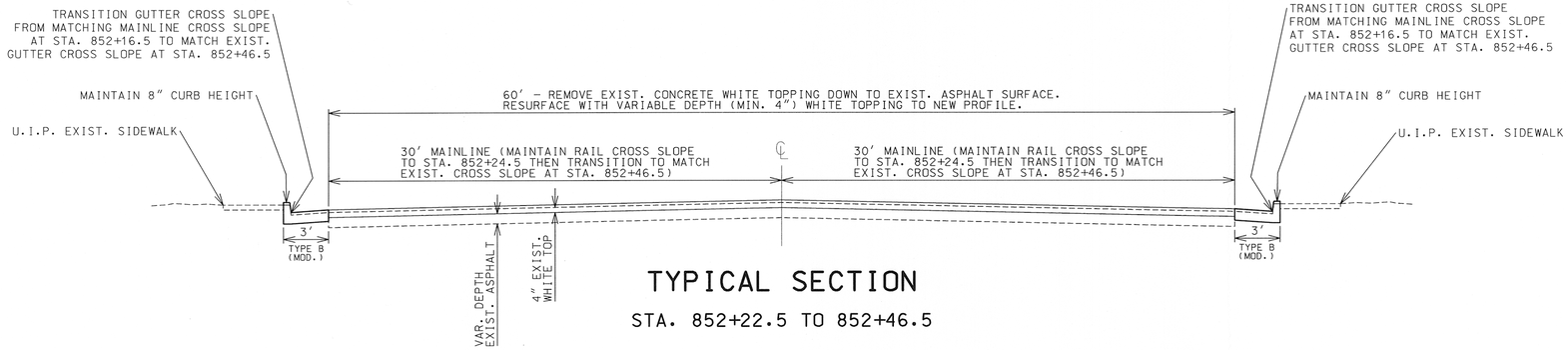

TYPICAL SECTION

STA. 852+22.5 TO 852+46.5

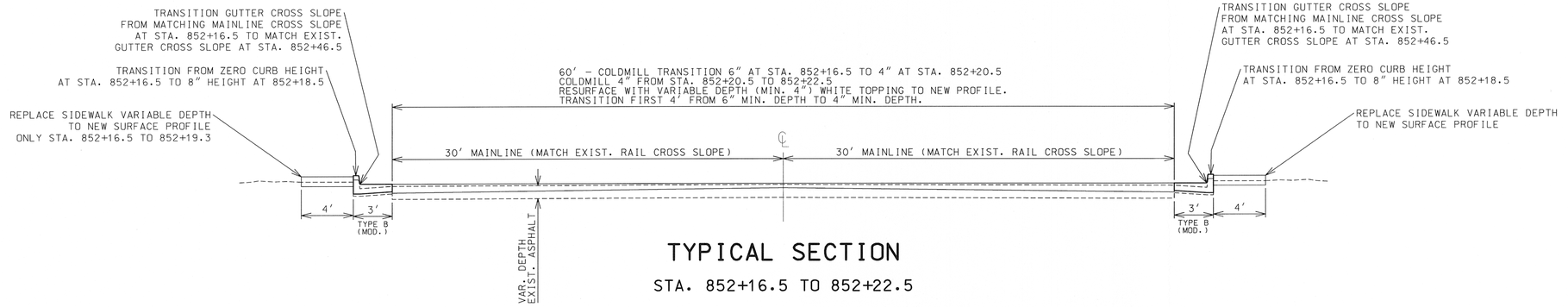

TYPICAL SECTION

STA. 852+16.5 TO 852+22.5

NOTE: CONSTRUCT SIDEWALKS AT NO GREATER THAN 2% CROSS SLOPE. USE 4' LENGTH TO TRANSITION INTO EXISTING SUBSTANDARD CROSS SLOPE.

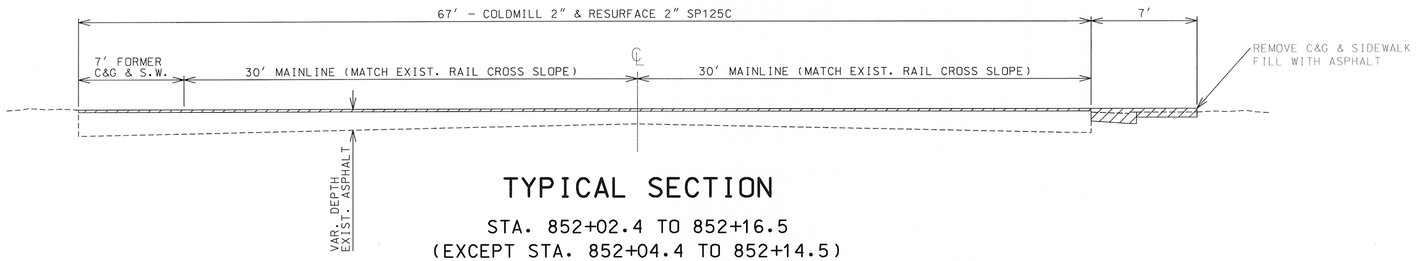

TYPICAL SECTION

STA. 852+02.4 TO 852+16.5
(EXCEPT STA. 852+04.4 TO 852+14.5)

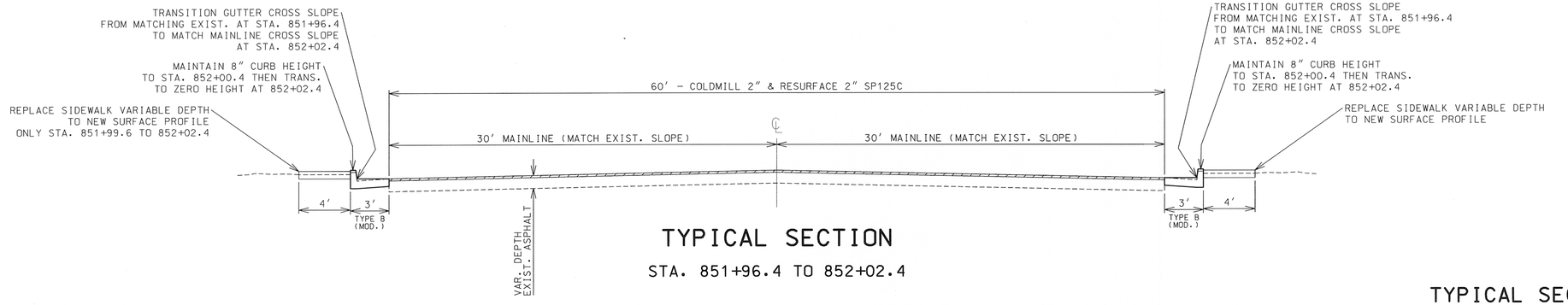

TYPICAL SECTION

STA. 851+96.4 TO 852+02.4

TYPICAL SECTION

SHEET 2 OF 3

STATE OF MISSOURI
KIRK E. JURANAS
NUMBER E-22818
REGISTERED PROFESSIONAL ENGINEER
8-27-10

DATE PREPARED: 8/27/2010
ROUTE: 5 | STATE: MO
DISTRICT: 8 | SHEET NO.: 2
COUNTY: LACLEDE
JOB NO.:
CONTRACT ID.: D8PP-11007
PROJECT NO.:
BRIDGE NO.:

REV.	DESCRIPTION	DATE

IF A SEAL IS PRESENT ON THIS SHEET IT HAS BEEN ELECTRONICALLY SEALED AND DATED.

MISSOURI HIGHWAYS AND TRANSPORTATION COMMISSION

105 WEST CAPITOL
JEFFERSON CITY, MO 65102
1-888-ASK-MODOT (1-888-275-6636)

002_TS_02_J8P0001_I5.dgn 1:44:52 PM 8/27/2010

LEFT SIDEWALK PROFILE
ROUTE 5
NO VERTICAL EXAGGERATION

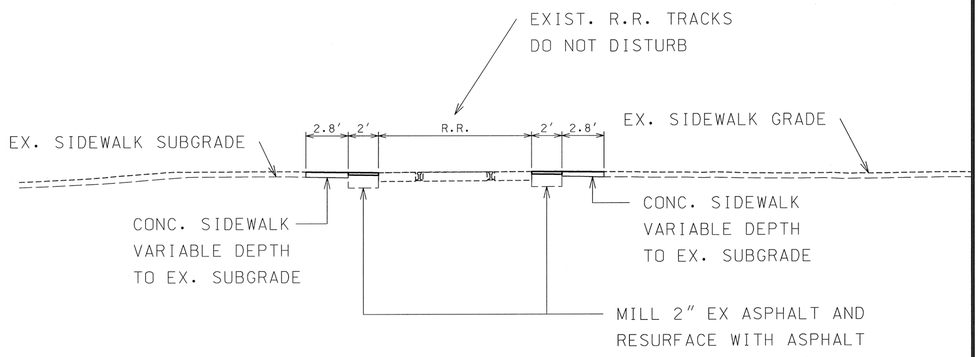

RIGHT SIDEWALK PROFILE
ROUTE 5
NO VERTICAL EXAGGERATION

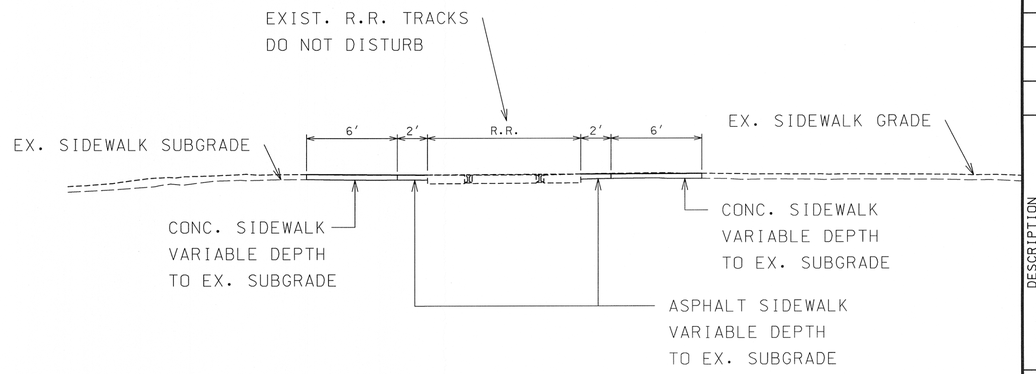

LEFT SIDEWALK PROFILE
ROUTE 5
10:1 VERTICAL EXAGGERATION

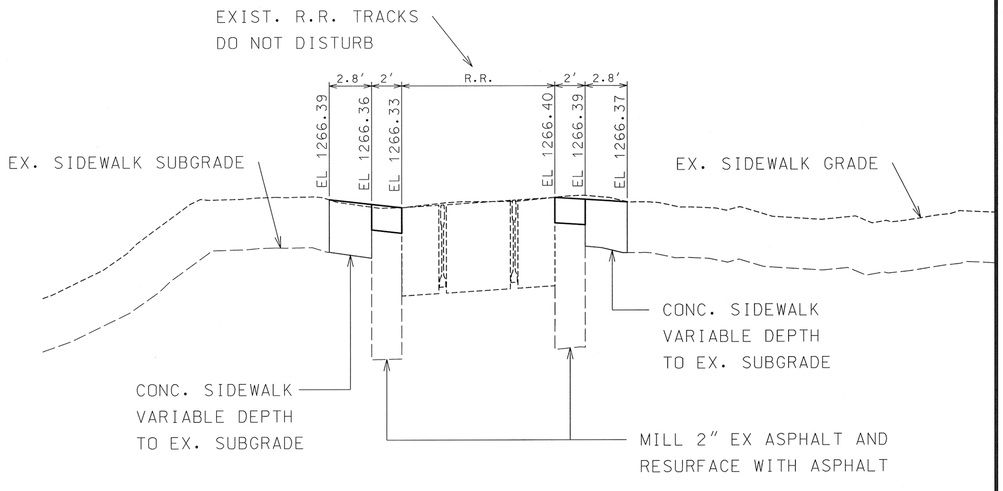

RIGHT SIDEWALK PROFILE
ROUTE 5
10:1 VERTICAL EXAGGERATION

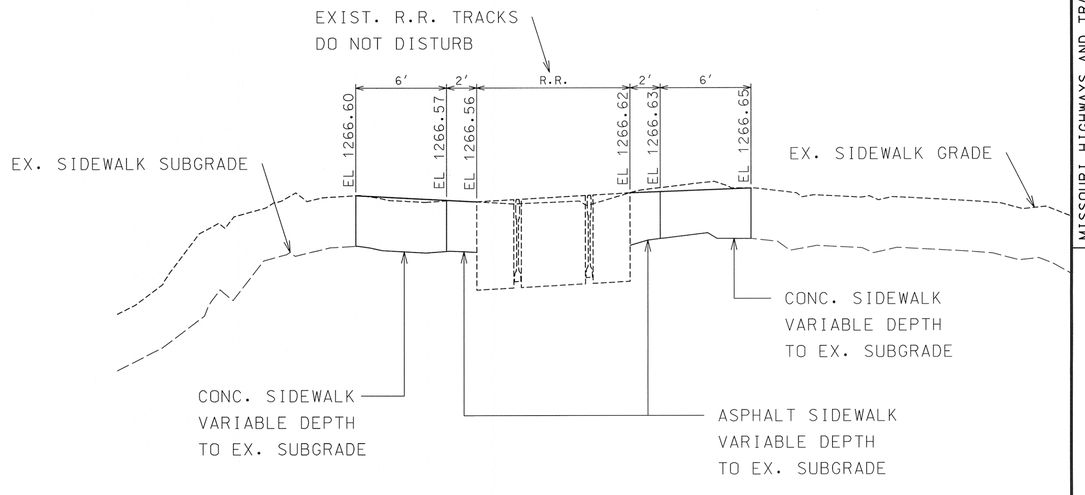

TYPICAL SECTION

SHEET 3 OF 3

STATE OF MISSOURI
KIRK E. JURANAS
NUMBER
REGISTERED ENGINEER
8-27-10

DATE PREPARED
8/27/2010

ROUTE	STATE
5	MO
DISTRICT	SHEET NO.
8	2

COUNTY
LACLEDE

JOB NO.

CONTRACT ID.
D8PP-11007

PROJECT NO.

BRIDGE NO.

DESCRIPTION	DATE

IF A SEAL IS PRESENT ON THIS SHEET IT HAS BEEN ELECTRONICALLY SEALED AND DATED.

MISSOURI HIGHWAYS AND TRANSPORTATION COMMISSION

105 WEST CAPITOL
JEFFERSON CITY, MO 65102
1-888-ASK-MODOT (1-888-275-6636)

REV.

002_TS_03_J8P0001_I20.dgn 1:44:55 PM 8/27/2010

MISSOURI HIGHWAYS AND TRANSPORTATION COMMISSION

SUMMARY OF QUANTITIES

REMOVAL OF IMPROVEMENTS

STATION	STATION	LOCATION	DESCRIPTION	AMOUNT	REMARKS
851+99.6	852+02.4	LEFT	4' CONCRETE SIDEWALK	1.2 S.Y.	REPLACE
851+96.4	852+02.4	LEFT	3' CONCRETE CURB & GUTTER	6 L.F.	REPLACE
851+96.4	852+04.4	RIGHT	4' CONCRETE SIDEWALK	3.6 S.Y.	PARTIALLY REPLACE
851+96.4	852+04.4	RIGHT	3' CONCRETE CURB & GUTTER	8 L.F.	PARTIALLY REPLACE
852+16.5	852+19.3	LEFT	4' CONCRETE SIDEWALK	1.2 S.Y.	REPLACE
852+16.5	852+46.5	LEFT	3' CONCRETE CURB & GUTTER	30 L.F.	REPLACE
852+14.5	852+22.5	RIGHT	4' CONCRETE SIDEWALK	3.6 S.Y.	PARTIALLY REPLACE
852+14.5	852+46.5	RIGHT	3' CONCRETE CURB & GUTTER	32 L.F.	PARTIALLY REPLACE
852+22.5	852+46.5	60' MAINLINE	4" CONCRETE WHITE TOPPING	160 S.Y.	REMOVE & RESURFACE
852+30.5	852+42.5	2'-6' LEFT	LOW PROFILE CONCRETE ISLAND	44.6 S.Y.	REMOVE & REPLACE ON NEW PAVEMENT
		TOTAL	ONE LUMP SUM		NO DIRECT PAY FOR SAW CUTS

4' WIDE CONCRETE SIDEWALK ✳

STATION	STATION	LOCATION	S.Y.	REMARKS
851+99.6	852+02.4	LEFT	1.2	U.I.P. EXIST. TRUNCATED DOMES
851+96.4	852+02.4	RIGHT	2.7	PLACE NEW TRUNCATED DOMES (NOT INCLUDED)
852+16.5	852+19.3	LEFT	1.2	U.I.P. EXIST. TRUNCATED DOMES
852+16.5	852+22.5	RIGHT	2.7	PLACE NEW TRUNCATED DOMES (NOT INCLUDED)
		TOTAL	7.8	✳ VARIABLE DEPTH. PAID FOR AS 4" SIDEWALK.

COLDMILLING

STATION	STATION	WIDTH FT.	DEPTH IN.	3" OR LESS S.Y.	MODIFIED S.Y.	OVER 3" S.Y.	REMARKS
851+96.4	852+02.4	60	2	40			
852+02.4	852+04.4	67	2	15			
852+14.5	852+16.5	67	2	15			
852+16.5	852+20.5	60	6" - 4"		27		
852+20.5	852+22.5	60	4			13	
			TOTALS	70	27	13	

TYPE B CURB AND GUTTER ✳

STATION	STATION	LOCATION	L.F.	REMARKS
851+96.4	852+02.4	LEFT	6.0	HEIGHT TRANS. LAST 2' & GUTTER CROSS SLOPE TRANS. FULL LENGTH
851+96.4	852+02.4	RIGHT	6.0	HEIGHT TRANS. LAST 2' & GUTTER CROSS SLOPE TRANS. FULL LENGTH
852+16.5	852+46.5	LEFT	30.0	HEIGHT TRANS. FIRST 2' & GUTTER CROSS SLOPE TRANS. FULL LENGTH
852+16.5	852+46.5	RIGHT	30.0	HEIGHT TRANS. FIRST 2' & GUTTER CROSS SLOPE TRANS. FULL LENGTH
		TOTAL	72.0	✳ VARIABLE DEPTH. PAID FOR AS TYPE B CURB & GUTTER.

3" CONCRETE MEDIAN STRIP

STATION	STATION	LOCATION	S.Y.	REMARKS
852+30.5	852+42.5	2'-6' LEFT	5.0	2' RADIUS ENDS
		TOTAL	5.0	

TRUNCATED DOMES

STATION	STATION	LOCATION	WIDTH (FT)	S.F.	REMARKS
851+99.6	852+01.6	RIGHT	4	8.0	DOME PAD ONLY. SIDEWALK UNDERNEATH IS PAID SEPARATELY.
851+99.6	852+01.6	RIGHT	4	8.0	DOME PAD ONLY. SIDEWALK UNDERNEATH IS PAID SEPARATELY.
			TOTAL	16.0	

MOBILIZATION

TOTAL	ONE LUMP SUM

DEPTH CONCRETE WHITE TOPPING (MIN. 4")

STATION	STATION	WIDTH FT.	FURNISH ✳ C.Y.	PLACE S.Y.	REMARKS
852+16.5	852+20.5	60	4.9	26.7	FIRST 4' TO BE TRANSITIONED FROM MIN. 4" TO MIN. 6" THICK
852+20.5	852+46.5	60	25.4	173.3	REMAINING 26' TO BE MINIMUM 4" THICK
		TOTALS	30.3	200.0	✳ NOTE: 32% ADDED TO VOLUME FOR ESTIMATED SUBSURFACE UNDULATIONS & RAISED PROFILE GRADE

SP125C ASPHALT

STATION	STATION	WIDTH (FT)	DEPTH (IN)	✳ TONS	REMARKS
851+96.4	852+02.4	60	2	4.4	MAINLINE ONLY
852+02.4	852+04.4	67	2	1.7	MAINLINE AND FORMER LEFT SIDEWALK & C&G
852+02.4	852+04.4	7	VARIES	0.7	REPLACEMENT FOR RIGHT SIDEWALK & C&G
852+14.5	852+16.5	67	2	1.7	MAINLINE AND FORMER LEFT SIDEWALK & C&G
852+14.5	852+16.5	7	VARIES	0.7	REPLACEMENT FOR RIGHT SIDEWALK & C&G
			TOTAL	8.5	✳ ESTIMATED AT 2 TONS/C.Y.

CONTRACTOR FURNISHED SURVEYING AND STAKING

TOTAL	ONE LUMP SUM	INCLUDES ALL NECESSARY FIELD MEASUREMENTS, STRING-LINING, AND STAKING

TACK COAT

STATION	STATION	WIDTH (FT.)	S.Y.	GAL.	REMARKS
851+96.4	852+02.4	60	40	4.0	
852+02.4	852+04.4	67	15	1.5	
852+14.5	852+16.5	67	15	1.5	
			TOTAL	10	✳ ESTIMATED AT 0.10 GAL/S.Y. & ROUNDED UP TO NEAREST 10 GAL.

SUMMARY SHEET
SHEET 1 OF 1

STATE OF MISSOURI
MATTHEW G. SIEKER
NUMBER E-25571
REGISTERED PROFESSIONAL ENGINEER
8/30/2010

DATE PREPARED 8/30/2010
ROUTE 5 | STATE MO
DISTRICT 8 | SHEET NO. 3
COUNTY LACLEDE
JOB NO.
CONTRACT ID. D8PP-11007
PROJECT NO.
BRIDGE NO.

REV. | DESCRIPTION | DATE

MISSOURI HIGHWAYS AND TRANSPORTATION COMMISSION
105 WEST CAPITOL
JEFFERSON CITY, MO 65102
1-888-ASK-MODOT (1-888-275-6636)

IF A SEAL IS PRESENT ON THIS SHEET IT HAS BEEN ELECTRONICALLY SEALED AND DATED.

003_QU_01_J8P0001_i1.dgn 8:24:21 AM 8/30/2010

NW1/4 NW1/4
11-34-16

851

852

1/4/1/4 SECTION LINE

SE1/4 NW1/4
11-34-16

Lebanon Publishing

℄

BURLINGTON NORTHERN RAILROAD

POT1 STA 839+12.10

Sta 852+09.4 Route 5
=9600+30 R.R.

2' Asph.

U.I.P. Exist. 2'X3' Dome

U.I.P. Exist. 2'X3' Dome

4' Sidewalk

Type B C&G

Edge of Pav't.

Edge of Pav't.

2' Asph.

30'
New Conc. Whitetopping

U.I.P. Exist. Stop Bar

EXIST. 4" WHITETOPPING

Conc. Pan

+30.5

+42.5

4'

Sign removed and reset by MoDot

Proposed Saw Cut-Line (No Direct Pay)

EXIST. 4" WHITETOPPING

JEFFERSON AVE
S 46° 01' 48" E

ROUTE 5

Exist. Asphalt

RR Tracks

Conc. Pan

Conc. Pan

8'
Mill & Fill Exist. Asph.

8'

24'
(R) Exist. Whitetopping

Edge of Pav't.

New C & G
(All 4 quadrants)

Edge of Pav't.

Type B C&G

4' Sidewalk

4' Sidewalk

New 2'x4' Truncated Domes

2' Asph.

New sidewalk
(All 4 quadrants)

+04.4

+14.5

10'

New 2'x4' Truncated Domes

RAILROAD CONTROLLER

RAILROAD EXCEPTION

EQUATION:
Sta 839+12.10 AH
Sta 852+88.10 BK =

SW1/4 NW1/4
11-34-16

NOTES:

1. ANY WORK INDICATED ON THE PLANS THAT EXTENDS BEYOND THE PROJECT LIMITS IS CONSIDERED INCIDENTAL TO AND A PART OF THE CONSTURCTION OF THIS PROJECT.

2. TRAFFIC CONTROL, STRIPING, AND SIGNING PERFORMED BY MODOT.

SCALE
0 10 20 30

PLAN LAYOUT
RTE 5
(JEFFERSON AVE)
SHEET 1 OF 1

STATE OF MISSOURI
MATTHEW G. SEILER
NUMBER E-25571
REGISTERED PROFESSIONAL ENGINEER
8/30/2010

DATE PREPARED
8/30/2010

ROUTE	STATE
5	MO
DISTRICT	SHEET NO.
8	4

COUNTY
LACLEDE

JOB NO.

CONTRACT ID.
D8PP-11007

PROJECT NO.

BRIDGE NO.

DESCRIPTION	DATE

IF A SEAL IS PRESENT ON THIS SHEET IT HAS BEEN ELECTRONICALLY SEALED AND DATED.

MISSOURI HIGHWAYS AND TRANSPORTATION COMMISSION

105 WEST CAPITOL
JEFFERSON CITY, MO 65102
1-888-ASK-MODOT (1-888-275-6636)

004_PP_01_J8P0001_i20.dgn 8:14:34 AM 8/30/2010

FOR INFORMATIONAL PURPOSES ONLY
(TRAFFIC CONTROL PROVIDED BY MODOT)

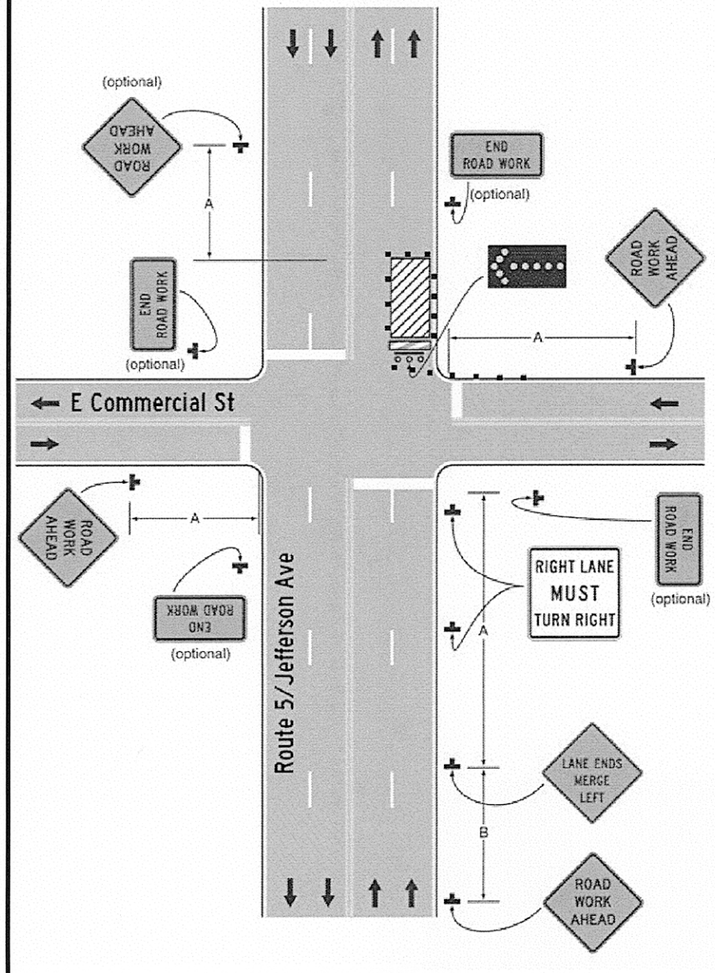

MUTCD TYPICAL APPLICATION 22
SOUTHBOUND LANES
APPROACHING COMMERCIAL ST

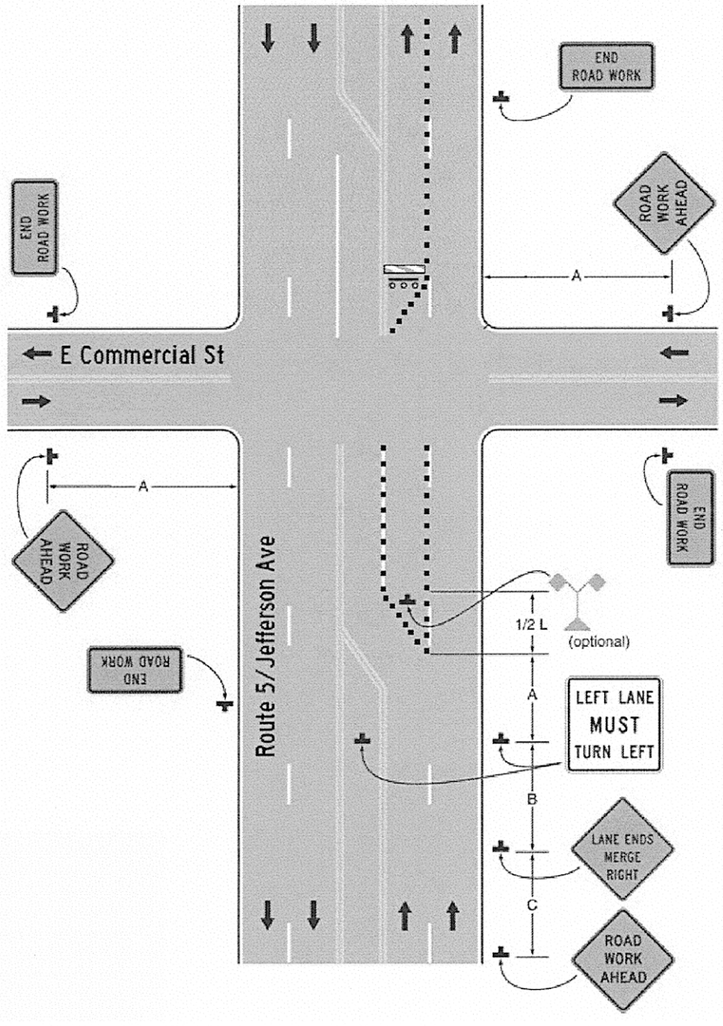

MUTCD TYPICAL APPLICATION 25
(MODIFIED)
SOUTHBOUND LANES
APPROACHING COMMERCIAL ST

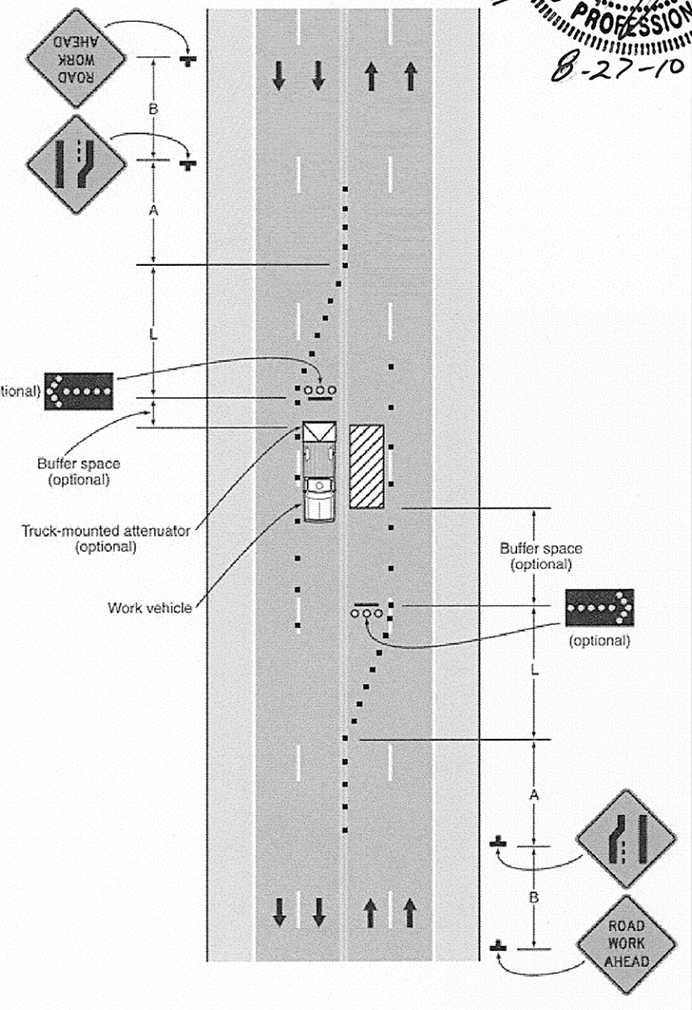

MUTCD TYPICAL APPLICATION 30
NORTHBOUND LANES
FOR TAPER LENGTHS AND SIGN SPACING

A = 200 ft B = 200 ft C = 200 ft L = 245 ft

TYPICAL SECTION

SHEET 1 OF 1

STATE OF MISSOURI
REGISTERED PROFESSIONAL ENGINEER
KIRK E. JURANAS
NUMBER E-22818
8-27-10

DATE PREPARED 8/27/2010

ROUTE	STATE
5	MO
DISTRICT	SHEET NO.
8	5

COUNTY: LACLEDE
JOB NO.
CONTRACT ID.: D8PP-11007
PROJECT NO.
BRIDGE NO.

DESCRIPTION	DATE

IF A SEAL IS PRESENT ON THIS SHEET IT HAS BEEN ELECTRONICALLY SEALED AND DATED.

MISSOURI HIGHWAYS AND TRANSPORTATION COMMISSION
105 WEST CAPITOL
JEFFERSON CITY, MO 65102
1-888-ASK-MODOT (1-888-275-6636)