PRECAST SEPARATOR TANK
1200 GALLON

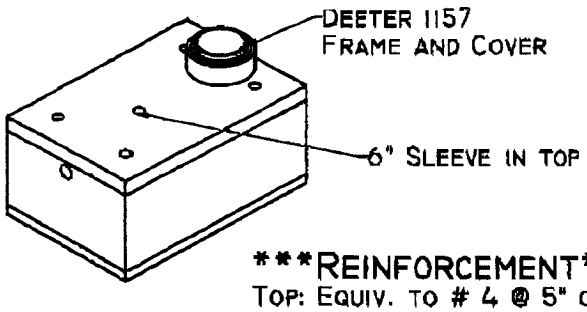

REINFORCEMENT
TOP: EQUIV. TO # 4 @ 5" O.C.E.W
WALLS: EQUIV. TO # 4 @ 10" O.C.E.W
INTERIOR WALLS/BAFFLES: EQUIV. TO # 4 @ 10" O.C.E.W
FLOOR: EQUIV. TO # 4 @ 10" O.C.E.W

O.D. 7' X 10.5'
I.D. 6' X 9.5'

CONTRACTOR: MODOT - DIST. #7
PROJECT: MAINTENANCE COMPLEX
DATE: MAR 09, 2010
STRUCTURE NO: SEPARATOR TANK
STATION:

MAR 1 2010
BY: Chris Shepherd

65.

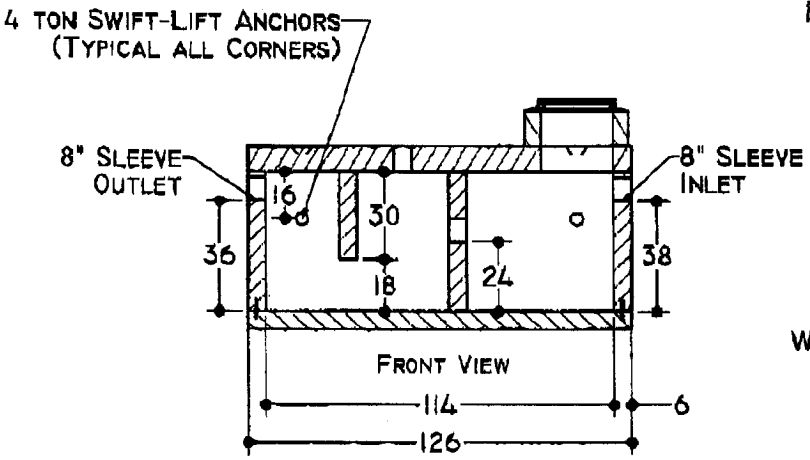

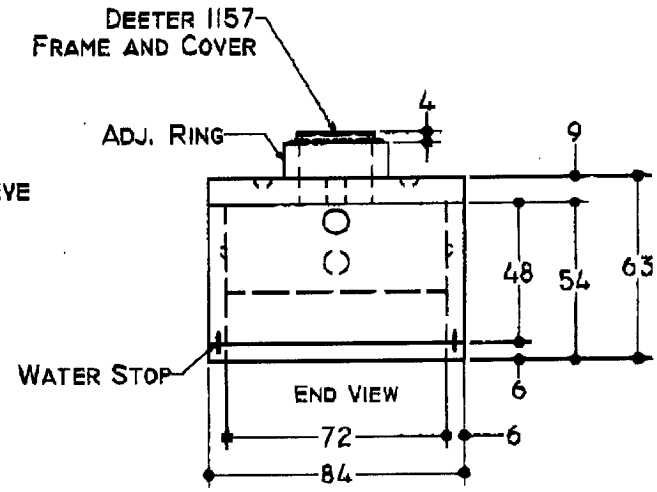

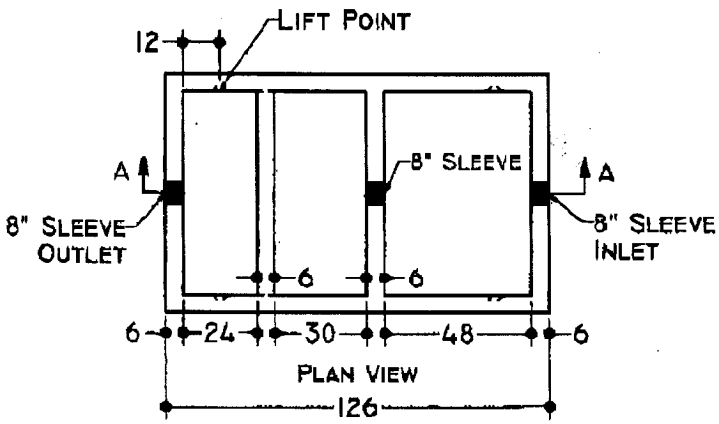

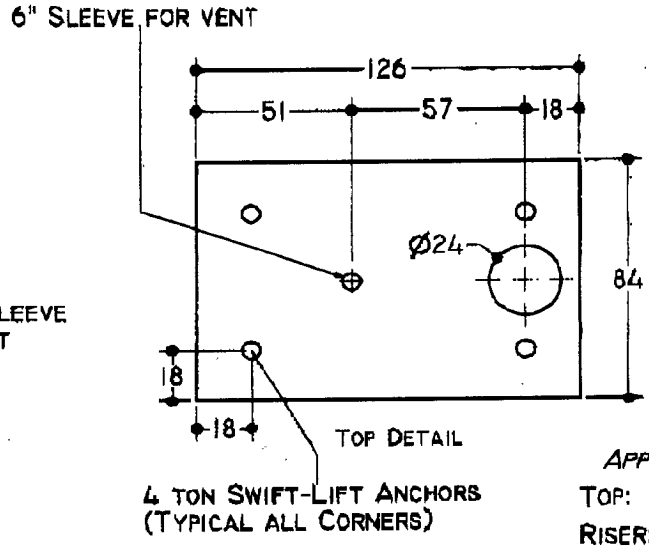

APPROX. WEIGHT
TOP: 7,900 LBS
RISER: LBS
BASE: 18,300 LBS