Trent Creek Bank Stabilization
DSR 119–10–001 EWP Project

LOCATION IN MISSOURI

Section 31 Township 22N, Range 29W
Lat=36°34'59"N; Long=94°06'56"W
McDonald County, Missouri

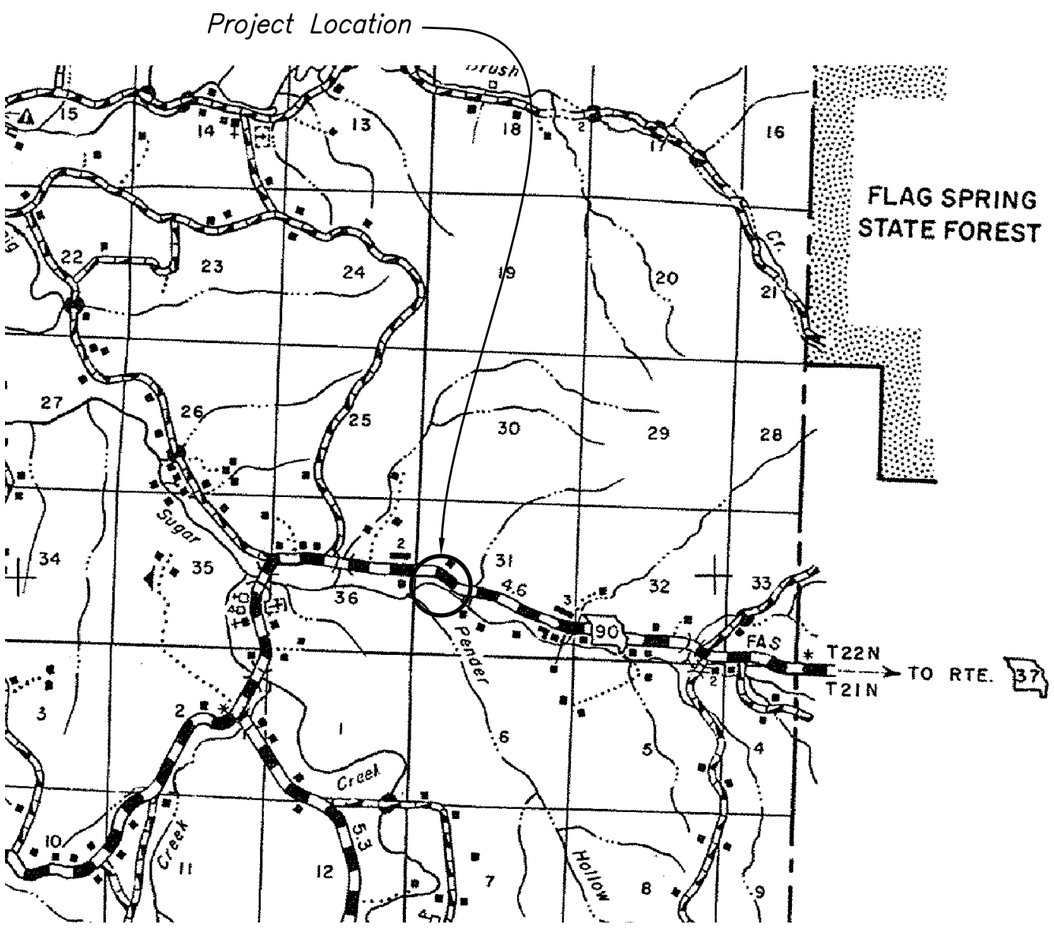

NOTES:

1. Missouri law requires that any person making or beginning any excavation notify all underground facility owners/operators which may be affected by said excavation at least two but not more than ten working days in advance, except in the case of an emergency. A "working day" is everyday, except Saturday, Sunday, or a legally declared local, state or federal holiday.

2. To make this notification and locate all utilities at the site or on ingress / egress roads prior to excavation, contact the Missouri One Call system and submit a locate request.
The phone number for the Missouri One Call System is 800–344–7483 (1–800–DIG–RITE).

3. The contact numbers for technical assistance concerning the plan set are as follows:

Sponsor Liaison: Skip Shaller, MoDOT Engineer 417–476–5684
Government Liaison: John Feistner, USDA Engineer 417–831–5246 x123

The contractor is responsible for having all utilities located at the work site or on ingress road prior to beginning work.
Missouri One Call Number is 800–344–7483 or 1–800–DIG–RITE.

MARTY COMSTOCK

Digitally signed by MARTY COMSTOCK
DN: c=US, o=U.S. Government, ou=Department of Agriculture, cn=MARTY COMSTOCK, 0.9.2342.19200300.100.1.1=12001000165502
Date: 2010.11.15 10:46:00 -06'00'

SHEET INDEX

Sheet –1– Cover Sheet
Sheet –2– Existing Condition
Sheet –3– Planned Construction
Sheet –4– Typical Cross Section
Sheet –5– Cross Section Data
Sheet –6– Project Volumes

STATE OF MISSOURI
MARTY ALAN COMSTOCK
NUMBER PE-25697
PROFESSIONAL ENGINEER

Marty A. Comstock – Engineer
Missouri PE–25697

		Date
Designed	MAC	7/10
Drawn	MJM	7/10
Checked	DLW	11/10
Approved		

COVER SHEET
TRENT CREEK BANK STABILIZATION
DSR 119–10–001
MCDONALD COUNTY, MISSOURI

United States Department of Agriculture
NRCS Natural Resources Conservation Service
Springfield Area Office
688 S. State Hwy. B, Suite 100,
Springfield, MO 65802 (417)831–5246

File Name

Drawing Name

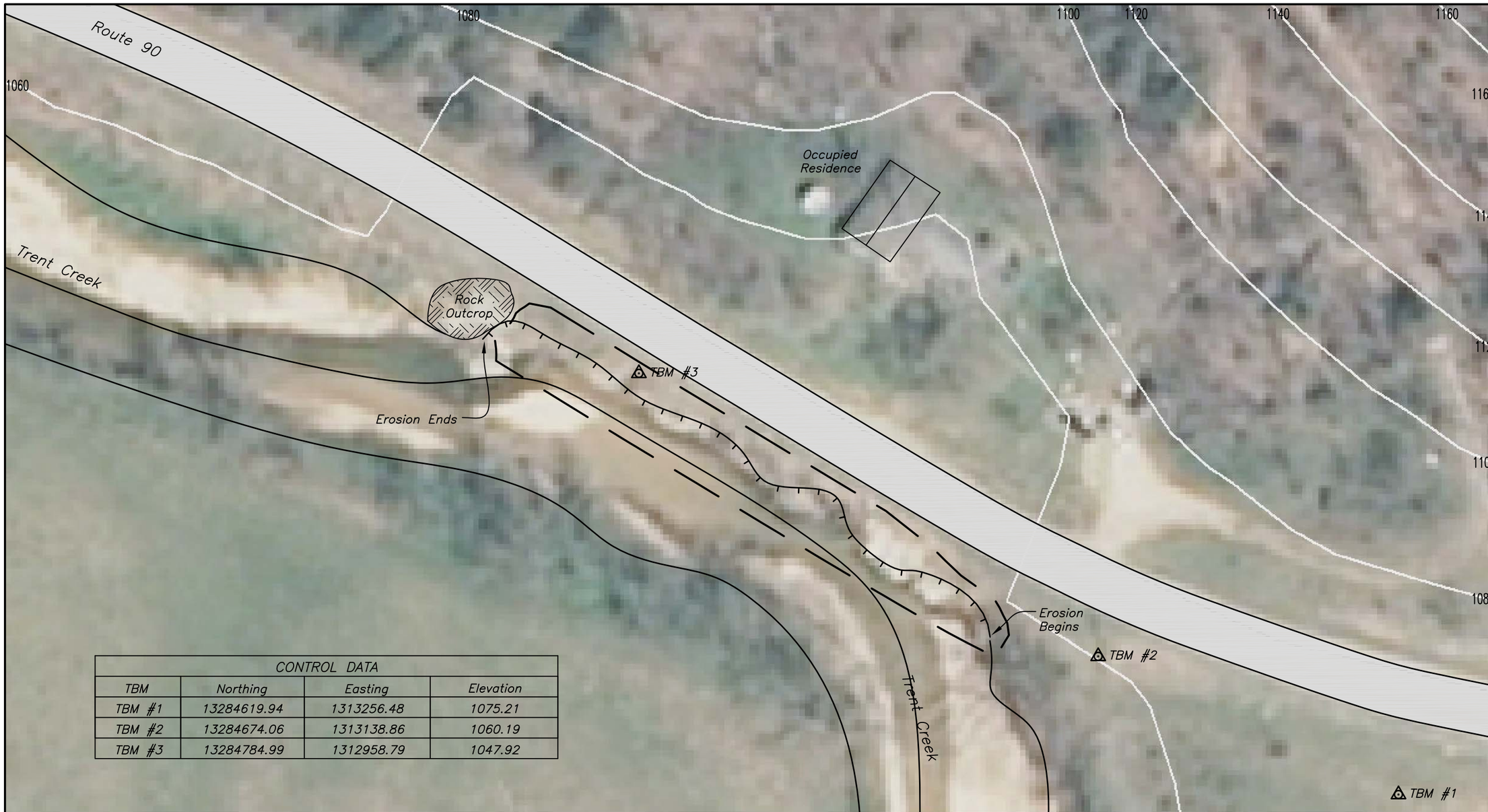

CONTROL DATA			
TBM	Northing	Easting	Elevation
TBM #1	13284619.94	1313256.48	1075.21
TBM #2	13284674.06	1313138.86	1060.19
TBM #3	13284784.99	1312958.79	1047.92

NOTES:

1. Control points established by GPS survey and post analysis by the Online Positioning User Service available through the National Geodetic Survey.
2. Horizontal control is reference the North American Datum 83. Vertical control is reference the North American Vertical Datum 88. All displayed units in feet.
3. Benchmark Information:

- TBM#1: Top of ½" diameter galvanized steel bolt driven flush with the ground, marked with fluorescent paint ~ 30' SW of road edge as shown.
- TBM#2: Top of ½" diameter grounding rod at west base of power pole marked with fluorescent paint.
- TBM#3: Top of 24" diameter galvanized culvert outlet marked with fluorescent paint.

40 20 0 40 80

Scale in Feet

STATE OF MISSOURI
MARTY ALAN COMSTOCK
NUMBER PE-25697
PROFESSIONAL ENGINEER

Marty A. Comstock – Engineer
Missouri PE–25697

		Date
Designed	MAC	7/10
Drawn	MJM	7/10
Checked	DLW	11/10
Approved		

EXISTING CONDITION
TRENT CREEK BANK STABILIZATION
DSR 119–10–001
MCDONALD COUNTY, MISSOURI

United States Department of Agriculture
NRCS Natural Resources Conservation Service
Springfield Area Office
688 S. State Hwy. B, Suite 100,
Springfield, MO 65802 (417)831–5246

File Name

Drawing Name

Sheet 2 of 6

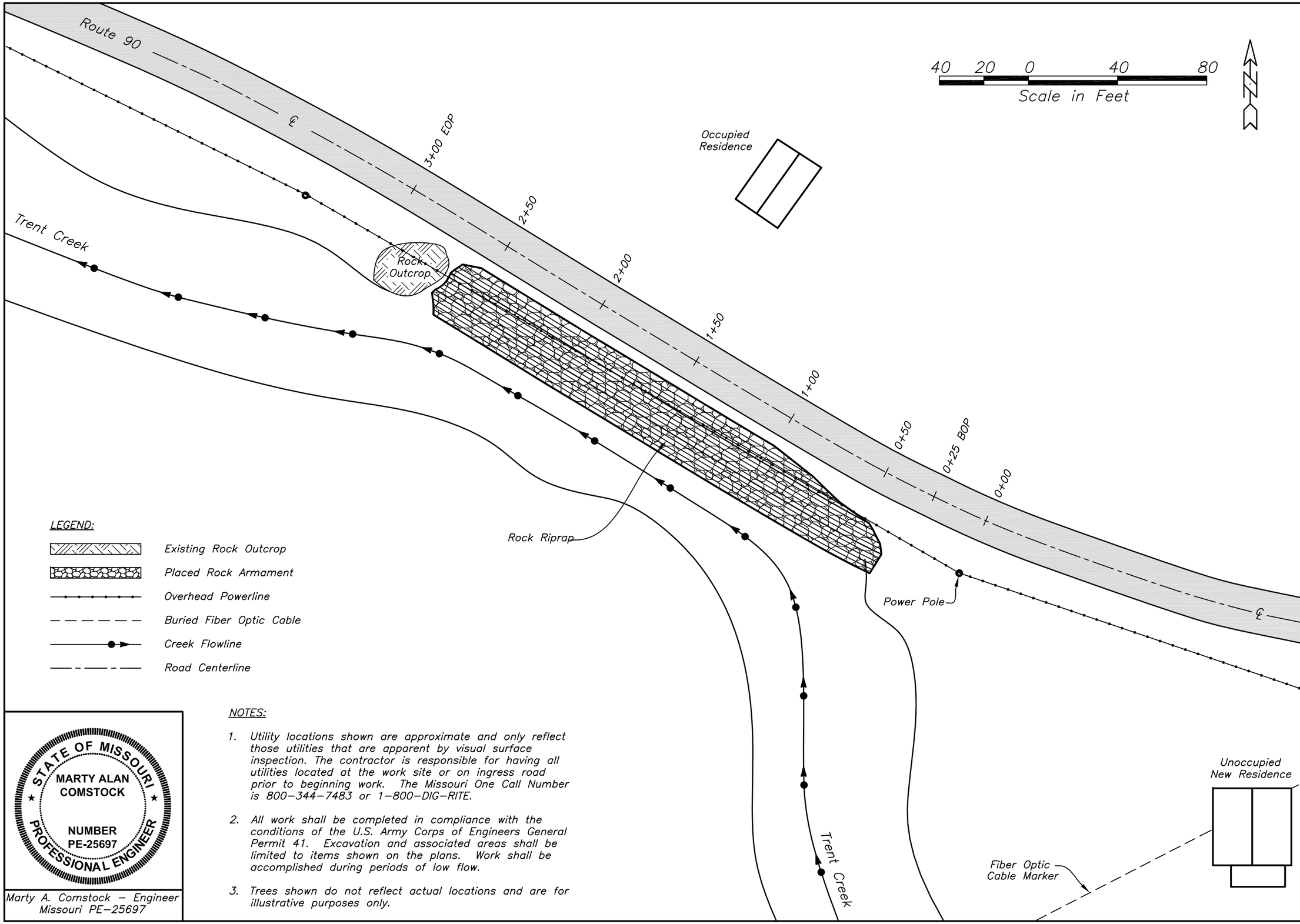

NOTES:

1. Utility locations shown are approximate and only reflect those utilities that are apparent by visual surface inspection. The contractor is responsible for having all utilities located at the work site or on ingress road prior to beginning work. The Missouri One Call Number is 800–344–7483 or 1–800–DIG–RITE.

2. All work shall be completed in compliance with the conditions of the U.S. Army Corps of Engineers General Permit 41. Excavation and associated areas shall be limited to items shown on the plans. Work shall be accomplished during periods of low flow.

3. Trees shown do not reflect actual locations and are for illustrative purposes only.

STATE OF MISSOURI
MARTY ALAN COMSTOCK
NUMBER PE-25697
PROFESSIONAL ENGINEER

Marty A. Comstock – Engineer
Missouri PE–25697

Designed MAC Date 7/10
Drawn MJM 7/10
Checked DLW 11/10
Approved

PLANNED CONSTRUCTION
TRENT CREEK BANK STABILIZATION
DSR 119–10–001
MCDONALD COUNTY, MISSOURI

United States Department of Agriculture
Natural Resources Conservation Service
NRCS
Springfield Area Office
688 S. State Hwy. B, Suite 100,
Springfield, MO 65802 (417)831–5246

File Name

Drawing Name

Sheet 3 of 6

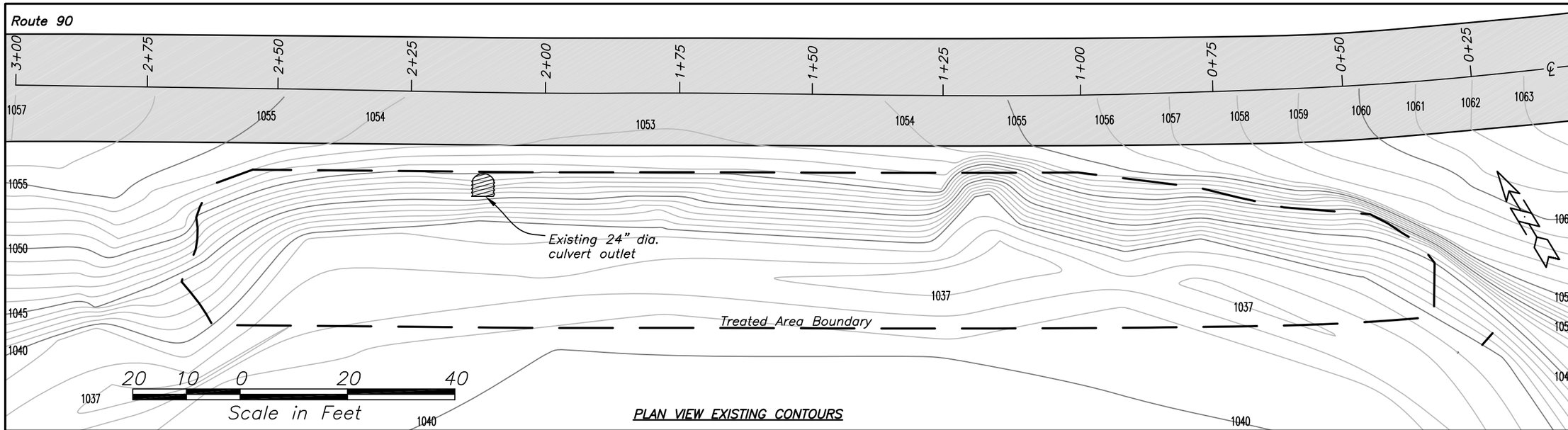

PLAN VIEW EXISTING CONTOURS

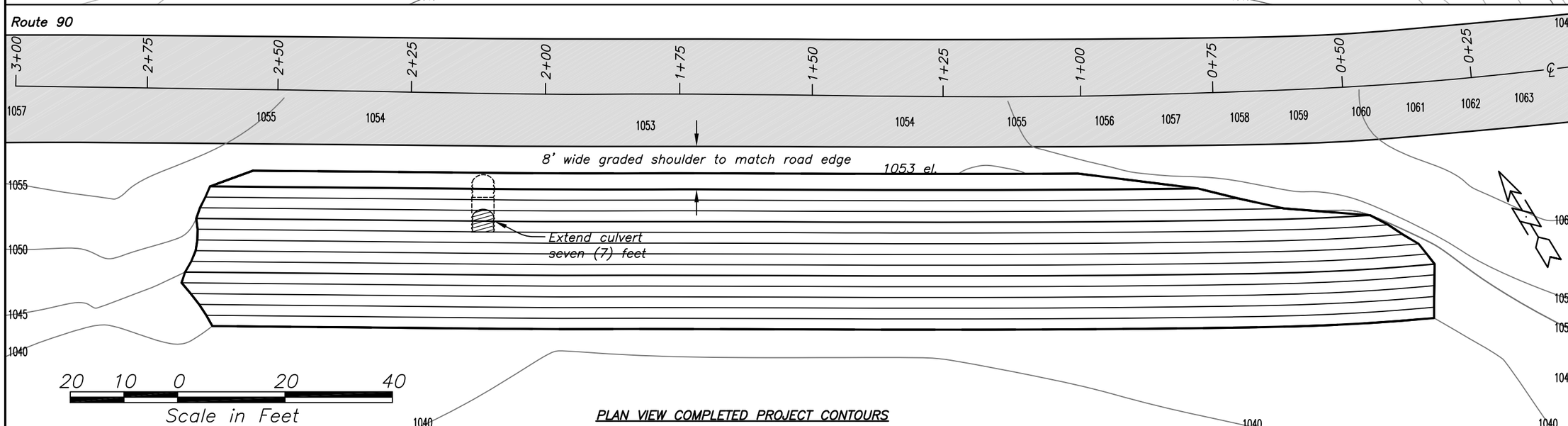

PLAN VIEW COMPLETED PROJECT CONTOURS

Notes:

1. The culvert extension and connecting band shown on the drawings shall comply with Division Section 1020, CORRUGATED METALLIC–COATED STEEL CULVERT PIPE, PIPE–ARCHES AND END SECTIONS, of the Missouri Standard Specifications for Highway Construction.
2. Culvert shall be a minimum of 16 gauge.
3. Contractor is responsible for confirming the diameter of the existing culvert and providing an extension of the same diameter.
4. Work shall include preparing the end of the existing culvert to receive the coupling band.

STATE OF MISSOURI
MARTY ALAN COMSTOCK
NUMBER PE-25697
PROFESSIONAL ENGINEER

Marty A. Comstock – Engineer
Missouri PE–25697

		Date
Designed	MAC	7/10
Drawn	MJM	7/10
Checked	DLW	11/10
Approved		

PLAN VIEW
TRENT CREEK BANK STABILIZATION
DSR 119–10–001
MCDONALD COUNTY, MISSOURI

United States Department of Agriculture
NRCS Natural Resources Conservation Service
Springfield Area Office
688 S. State Hwy. B, Suite 100,
Springfield, MO 65802 (417)831–5246

File Name

Drawing Name

NOTES:

1. Rock blanket shall be a minimum of 36" thick measured perpendicular to the slope. See Sheet 6 for required rock gradation.
2. Excavate and remove soil below existing ground line as shown to achieve proper armament placement depths.
3. Beginning of project (BOP) and end of project (EOP) are taken to be 0+25 and 3+00 respectively.
4. For total rock armament, compacted gravel fill, and excavation estimates, refer to Sheet 6.

LEGEND:

- Existing Rock Outcrop
- Rock Armament
- Compacted Gravel
- Geotextile Fabric
- Existing Ground Line

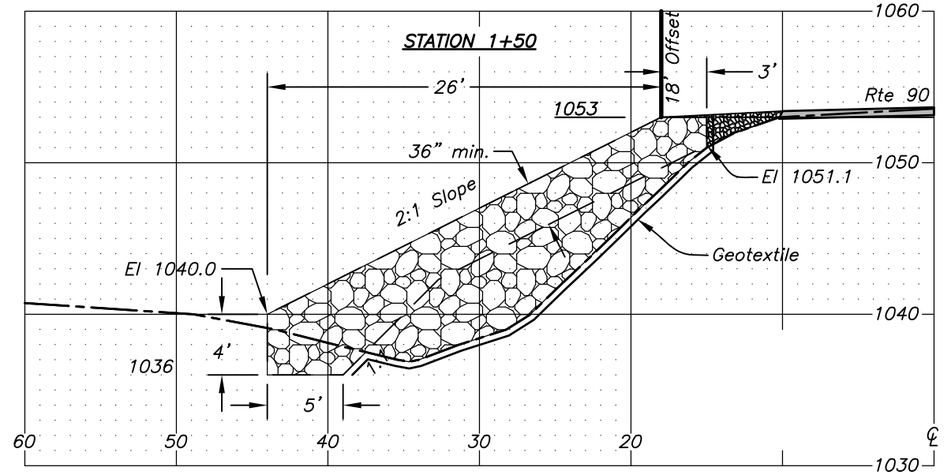

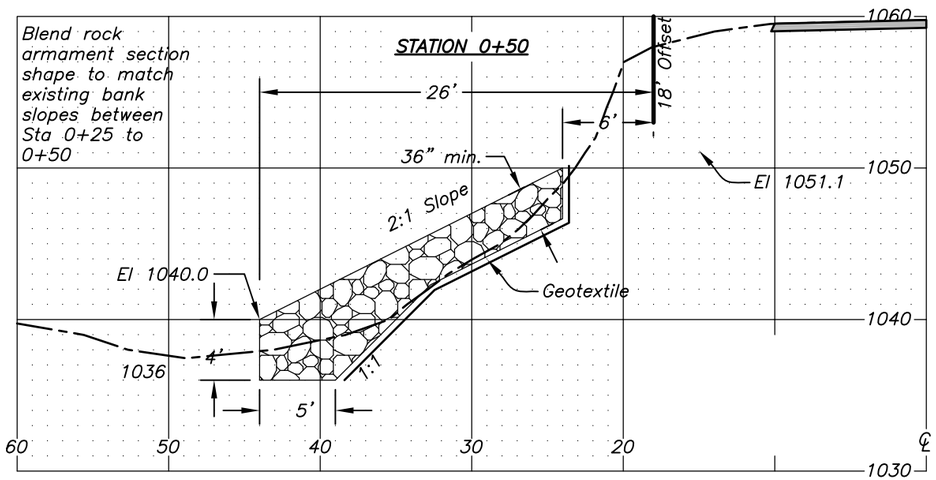

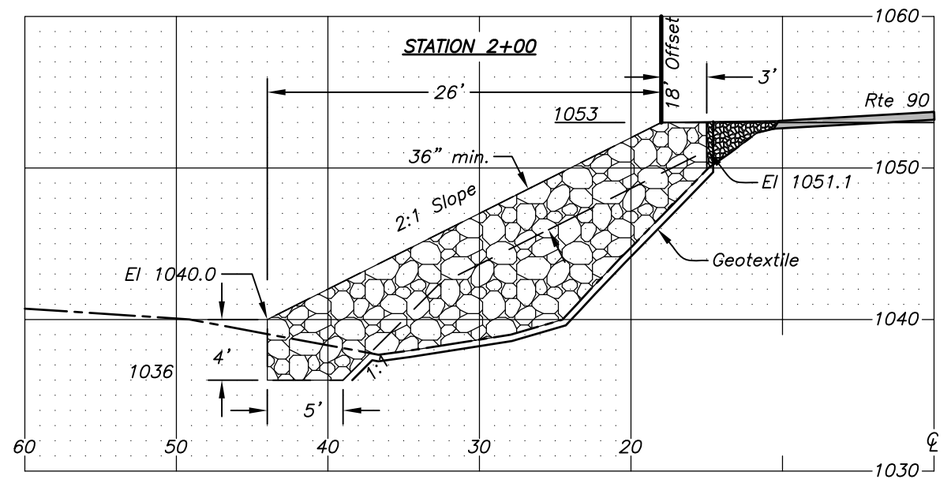

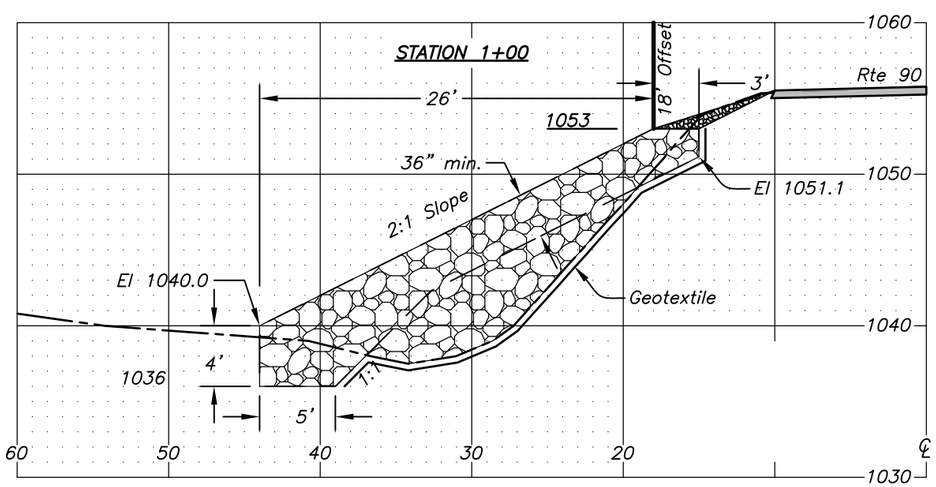

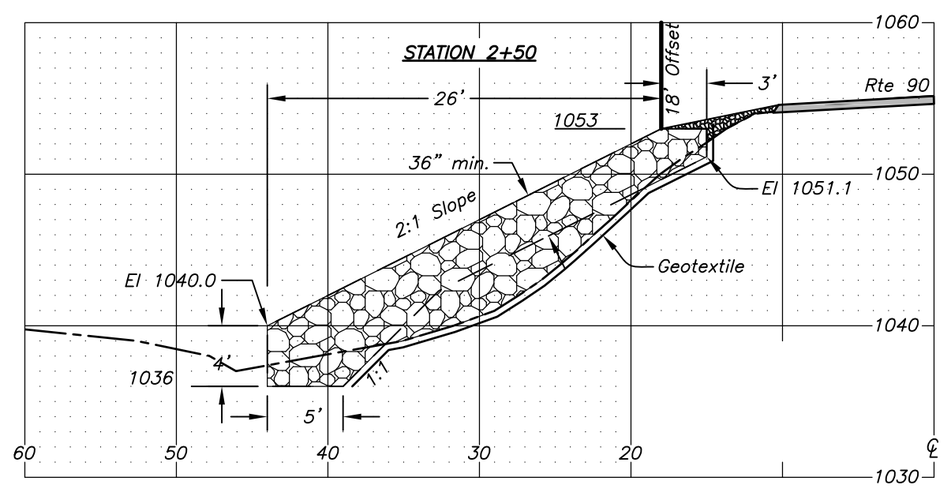

STATE OF MISSOURI
MARTY ALAN COMSTOCK
NUMBER PE-25697
PROFESSIONAL ENGINEER

Marty A. Comstock – Engineer
Missouri PE–25697

		Date
Designed	MAC	7/10
Drawn	MJM – MAC	7/10
Checked	DLW	11/10
Approved		

CROSS SECTION DATA
TRENT CREEK BANK STABILIZATION
DSR 119–10–001
MCDONALD COUNTY, MISSOURI

United States Department of Agriculture
NRCS Natural Resources Conservation Service
Springfield Area Office
688 S. State Hwy. B, Suite 100,
Springfield, MO 65802 (417)831–5246

File Name

Drawing Name

Sheet 5 of 6

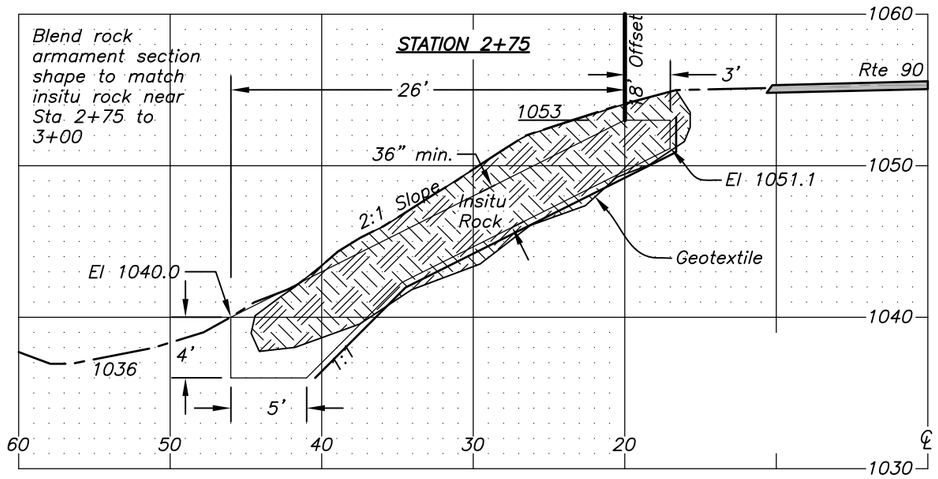

NOTES:

1. The rock blanket shall consist of rock that is sound, durable stone conforming to the displayed gradation. At contractor's option, the rock blanket may consist of rock meeting the requirements of MoDOT Type 4 Rock Ditch Liner.
2. The source, type, and gradation of rock shall be reviewed and approved by the government representative prior to delivery of rock to the site.
3. Except as otherwise noted, placed rock shall be uniformly representative of the specified gradation. The rock may not be end dumped into place.
4. Larger rock shall be placed at the toe of the rock blanket to form a stable base for fill.
5. Geotextile shown shall be placed under all rock armament to protect in-situ soil to approximately 1037 el.
6. At splices the geotextile shall be overlapped a minimum of eighteen (18) inches and pinned to ground.
7. Geotextile shall be non-woven, minimum weight of fourteen (14) ounce/square yard and conform to Missouri Construction Specification 095, and Missouri Material Specification, 592, Geotextile.
8. From the 18' centerline offset to the edge of road, place compacted gravel graded from a 1053 el to the road edge elevation respectively. Gravel shall conform to "Gravel A or Crushed Stone B" as specified in Section 1006 of MoDOT Missouri Standard Specifications for Highway Construction.
9. Work zone traffic management shall be in accordance with applicable portions of Division 100 and Division 600 of the Missouri Standard Specifications for Highway Construction.

GRADATION OF ROCK ARMANENT

PERCENT PASSING BY SIZE	SIZE (INCHES)
100	$2.0\ D_{50}$ = 30"
50–80	$1.4\ D_{50}$ = 21"
25–50	D_{50} = 15"
10–30	$.5\ D_{50}$ = 8"
0–5	$.2\ D_{50}$ = 3"

TOTAL ESTIMATED PROJECT QUNATITIES

Item	Quantity	
Length of Stream Armanent	275 ft *	
Excavation	187 CY	
Geotextile	865 SY	
Rock Riprap	1.502 CY	2,102 TN **
Compacted Gravel	50 CY	75 TN ***

* Measured along centerline of Route 90
** Using a conversion factor of 1CY = 1.4 TN
*** Using a conversion factor of 1 CY = 1.5 TN

STATE OF MISSOURI
MARTY ALAN COMSTOCK
NUMBER PE-25697
PROFESSIONAL ENGINEER

Marty A. Comstock – Engineer
Missouri PE–25697

		Date
Designed	MAC	7/10
Drawn	MJM – MAC	7/10
Checked	DLW	11/10
Approved		

PROJECT VOLUMES
TRENT CREEK BANK STABILIZATION
DSR 119–10–001
MCDONALD COUNTY, MISSOURI

United States Department of Agriculture
NRCS Natural Resources Conservation Service
Springfield Area Office
688 S. State Hwy. B, Suite 100,
Springfield, MO 65802 (417)831–5246

File Name

Drawing Name