KCI Construction Company

10315 Lake Bluff Drive
St. Louis, MO 63123
(314) 894-8888
Fax (314) 894-7418
www.kciconstruction.com

Aesthetic Panel Field Measuring
Column Schedule

Bridge Name	Bridge #	Column#	Dia (ft)	Proposed Length (ft)	Panel Square Footage side 1	face	side 2	SF
Riverview	A5859	1	3.008	8.81	1.979	3.969	1.979	69.838
Riverview	A5859	2	3.008	19.30	1.979	3.969	1.979	152.993
Riverview	A5859	3	3.008	17.91	1.979	3.969	1.979	141.974
Riverview	A5859	4	3.008	6.90	1.979	3.969	1.979	54.697
							Total	**419.501**
Union	A5976	1	3.517	12.79	2.302	4.635	2.302	118.174
Union	A5976	2	3.517	13.42	2.302	4.635	2.302	123.995
Union	A5976	3	3.517	11.65	2.302	4.635	2.302	107.641
Union	A5976	4	3.517	10.76	2.302	4.635	2.302	99.418
Union	A5976	5	3.517	10.70	2.302	4.635	2.302	98.864
Union	A5976	6	3.517	11.53	2.302	4.635	2.302	106.532
							Total	**654.625**
W.Florissant	A5984	1	2.508	9.39	1.635	3.635	1.635	64.850
W.Florissant	A5984	2	2.508	12.08	1.635	3.635	1.635	83.428
W.Florissant	A5984	3	2.508	13.77	1.635	3.635	1.635	95.099
W.Florissant	A5984	4	2.508	14.69	1.635	3.635	1.635	101.453
W.Florissant	A5984	5	2.508	10.77	1.635	3.635	1.635	74.380
W.Florissant	A5984	6	2.508	13.06	1.635	3.635	1.635	90.196
W.Florissant	A5984	7	2.508	14.11	1.635	3.635	1.635	97.447
W.Florissant	A5984	8	2.508	12.47	1.635	3.635	1.635	86.121
							Total	**692.974**
Taylor	A5986	1	2.508	12.00	1.635	3.635	1.635	82.875
Taylor	A5986	2	2.508	9.31	1.635	3.635	1.635	64.297
Taylor	A5986	3	2.508	13.81	1.635	3.635	1.635	95.375
Taylor	A5986	4	2.508	13.47	1.635	3.635	1.635	93.027
Taylor	A5986	5	2.508	13.32	1.635	3.635	1.635	91.991
Taylor	A5986	6	2.508	12.05	1.635	3.635	1.635	83.220
Taylor	A5986	7	2.508	13.58	1.635	3.635	1.635	93.787
Taylor	A5986	8	2.508	14.04	1.635	3.635	1.635	96.964
							Total	**701.537**
Adelaide	A5960	1	3.008	8.54	1.979	3.969	1.979	67.697
Adelaide	A5960	2	3.008	8.13	1.979	3.969	1.979	64.447
Adelaide	A5960	3	3.008	16.06	1.979	3.969	1.979	127.309
Adelaide	A5960	4	3.008	16.40	1.979	3.969	1.979	130.004
Adelaide	A5960	5	3.008	10.52	1.979	3.969	1.979	83.393
Adelaide	A5960	6	3.008	10.02	1.979	3.969	1.979	79.429
Adelaide	A5960	7	3.008	12.71	1.979	3.969	1.979	100.753
Adelaide	A5960	8	3.008	13.18	1.979	3.969	1.979	104.479
							Total	**757.512**
Prairie	A5860	1	3.008	11.02	1.979	3.969	1.979	87.356
Prairie	A5860	2	3.008	16.12	1.979	3.969	1.979	127.785
Prairie	A5860	3	3.008	16.75	1.979	3.969	1.979	132.779
Prairie	A5860	4	3.008	12.11	1.979	3.969	1.979	95.997
							Total	**443.917**
E.Grand	A5895	1	2.508	10.27	1.635	3.635	1.635	70.927
E.Grand	A5895	2	2.508	20.11	1.635	3.635	1.635	138.885
E.Grand	A5895	3	2.508	20.23	1.635	3.635	1.635	139.714
E.Grand	A5895	4	2.508	10.12	1.635	3.635	1.635	69.891
							Total	**419.417**
Angelica	A5858	1	3.008	12.19	1.979	3.969	1.979	96.631
Angelica	A5858	2	3.008	20.88	1.979	3.969	1.979	165.518
Angelica	A5858	3	3.008	20.76	1.979	3.969	1.979	164.566
Angelica	A5858	4	3.008	12.37	1.979	3.969	1.979	98.058
							Total	**524.773**

Length pending answer to KCI RFI #10

TOTAL SF 4614.255

ADVANTAGE

Buildings & Exteriors, Inc

November 22, 2002

I-70 North Enhancements, Aesthetic Brick Panel Schedule. Height dimensions are based upon field measurements by personnel from Millstone Bangert, Inc. Panel dimensions will be in compliance with ADVANTAGE drawing 02-355 dated 11-11-02.

3- FOOT COLUMN DIAMETER

Bridg #	Column #	Length	Bridge #	Column #	Length
A-6204	1	10'-11 3/4"	A-6206	1	8'-7 3/4"
A-6204	2	9'-1 3/4"	A-6206	2	8'-8"
A-6204	3	10'-5 7/8"	A-6206	3	10'-2"
A-6204	4	10'-1 3/8"	A-6206	4	10'-6 1/4"
A-6204	5	11'-0 3/4"	A-6206	5	11'-7 1/8"
A-6204	6	10'-5 3/4"	A-6206	6	11'-9 7/8"
A-6204	7	10'-10 7/8"	A-6206	7	11'-9"
A-6204	8	10'-6 3/8"	A-6206	8	11'-6 1/2"

A-6205	1	8'-10 3/4"
A-6205	2	8'-10 1/2"
A-6205	3	13'-6 3/8"
A-6205	4	13'-3 1/2"
A-6205	5	16'-8 1/4"
A-6205	6	16'-4"
A-6205	7	18'-6 5/8"
A-6205	8	18'-4 5/8"

2.5 FOOT COLUMN DIAMETER

A-6238	1	9'-1 1/4"	A-6239	1	10'-0 3/4"
A-6238	2	10'-1 3/8"	A-6239	2	9'-0 1/4"
A-6238	3	12'-0 1/2"	A-6239	3	12'-5 5/8"
A-6238	4	12'-7 1/4"	A-6239	4	11'-11 1/8"
A-6238	5	13'-9 3/4"	A-6239	5	13'-11 3/8"
A-6238	6	14'-4 1/4"	A-6239	6	13'-5 1/2"
A-6238	7	17'-5"	A-6239	7	17'-8 1/8"
A-6238	8	17'-8 3/4"	A-6239	8	16'-11 5/8"

8635 West 21st Street / Sand Springs, OK 74063-8529
918-246-9995 / Fax 918-245-1676

3'-0" ø COLUMNS

BRIDGE #	COLUMN #	OVERALL HEIGHT	STEEL HEIGHT	BOTTOM OF STRAPS		
				LOWER STRAP	MIDDLE STRAP	UPPER STRAP
A-6204	1	10'-11 3/4"	10'-3 3/4"	1'-1 7/8"	4'-10 3/8"	9-5 3/4"
A-6204	2	9'-1 3/4"	8'-5 3/4"	1'-2 1/8"	3'-11 1/2"	7'-8"
A-6204	3	10'-5 7/8"	9'-9 7/8"	1'-2"	4'-8"	8'-11 5/8"
A-6204	4	10'-1 3/8"	9'-5 3/8"	1'-2"	4'-5 1/2"	8'-7 1/4"
A-6204	5	11'-0 3/4"	10'-4 3/4"	1'-2 1/8"	4'-11 1/4"	9'-6 9/16"
A-6204	6	10'-5 3/4"	9'-9 3/4"	1'-2"	4'-7 3/8"	8'-11 7/8"
A-6204	7	10'-10 7/8"	10'-2 7/8"	1'-2"	4'-9 7/8"	9'-4 7/8"
A-6204	8	10'-6 3/8"	9'-10 3/8"	1'-1 7/8"	4'-7 7/8"	9'-0 3/16"
A-6205	1	8'-10 3/4"	8'-2 3/4"	1'-1 3/4"	3'-10 1/4"	7'-4 7/8"
A-6205	2	8'-10 1/2"	8'-2 1/2"	1'-2"	3'-10 3/16"	7'-4 1/2"
A-6205	3	13'-6 3/8"	12'-10 3/8"	1'-1 3/4"	6'-4 5/8"	12'-0 3/16"
A-6205	4	13'-3 1/2"	12'-7 1/2"	1'-1 7/8"	6'-0 1/2"	11'-9 3/8"
A-6205	5	16'-8 1/4"	16'-0 1/4"	1'-1 3/4"	6'-6"	15'-2 1/4"
A-6205	6	16'-4"	15'-8"	1'-2 1/8"	7'-6 9/16"	14'-10"
A-6205	***7***	18'-0 7/8"	17'-4 7/8"			
A-6205	***8***	18'-1 3/8"	17'-5 3/8			
A-6206	1	8'-7 3/4"	7'-11 3/4"	1'-2"	3'-9 1/16"	7'-1 5/8"
A-6206	***2***	8'-8"	8'-0"			
A-6206	3	10'-2"	9'-6"	1'-2 1/8"	4'-6 3/16"	8'-7 5/8"
A-6206	4	10'-6 1/4"	9'-10 1/4"	1'-1 5/8"	4'-8 1/8"	8'-11 15/16"
A-6206	5	11'-7 1/8"	10'-11 1/8"	1'-1 7/8"	5'-2 5/8"	10'-1"
A-6206	6	11'-9 7/8"	11'-1 7/8"	1'-2 3/16"	5'-3 1/2"	10'-3 3/4"
A-6206	7	11'-9"	11'-1"	1'-1 15/16"	5'-1"	10'-3"
A-6206	8	11'-6 1/2"	10-10 1/2"	1'-1 7/8"	5'-2"	10'-0 3/8"

2'-6" ø COLUMNS

BRIDGE #	COLUMN #	OVERALL HEIGHT	STEEL HEIGHT	BOTTOM OF STRAPS		
				LOWER STRAP	MIDDLE STRAP	UPPER STRAP
A-6238	1	9'-1 1/4"	8'-5 1/4"	1'-2 1/8"	3'-11 11/16"	7'-7 5/16"
A-6238	2	10'-1 3/8"	9'-5 3/8"	1'-2"	4'-5 9/16"	8'-7 3/16"
A-6238	3	12'-0 1/2"	11'-4 1/2"	1'-1 3/4"	5'-5 1/16"	10'-6 3/8"
A-6238	4	12'-7 1/4"	11'-11 1/4"	1'-1 7/8"	5'-8 5/8"	11'-1"
A-6238	5	13'-9 3/4"	13'-1 3/4"	1'-2 1/8"	6'-8 9/16"	12'-3 13/16"
A-6238	6	14'-4 1/4"	13'-8 1/4"	1'-2 1/8"	6'-6 1/2"	12'-10 3/16"
A-6238	7	17'-5	16'-9"	1'-2 5/16"	7'-11 5/8"	15'-11"
A-6238	8	17'-8 3/4"	17'-0 3/4"	1'-2"	8'-6 3/8"	16'-2 5/8"
A-6239	1	10'-0 3/4"	9'-4 3/4"	1'-2 1/16"	4'-6 1/2"	8'-6 5/8"
A-6239	***2***	9'-0 1/4"	8'-4 1/4"	*****	4'-11 1/4"	7'-6"
A-6239	3	12'-5 5/8"	11'-9 5/8"	1'-2"	5'-7 1/4"	10'-11 3/4"
A-6239	4	11'-11 1/8"	11'-3 1/8"	1'-1 3/4"	5'-6 7/8"	10'-5"
A-6239	5	13'-11 3/8"	13'-3 3/8"	1'-2 3/16"	6'-2 1/8"	12'-5 1/2"
A-6239	6	13'-5 1/2"	12'-9 1/2"	1'-2 1/8"	6'-3 1/2"	11'-11 5/16"
A-6239	7	17'-8 1/8"	17'-0 1/8"	1'-1 7/8"	8'-7 1/8"	16'-2 1/8"
A-6239	8	16'-11 5/8"	16'-3 5/8"	1'-1 7/8"	7-10 1/4"	15'-5 1/2"

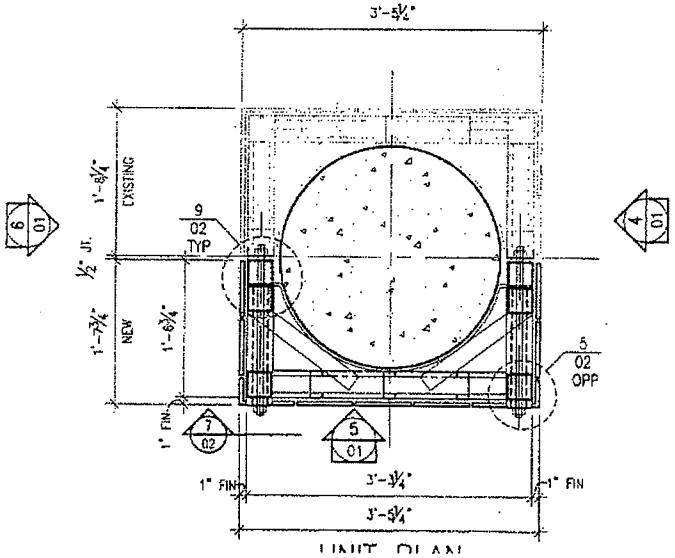

UNIT PLAN