Rte 180
St Louis County
Pipe Replacement
Exhibit C

STATE OF MISSOURI
THOMAS J. EVERS
NUMBER
PE-2007002781
PROFESSIONAL ENGINEER
7/2/10

Culvert Section

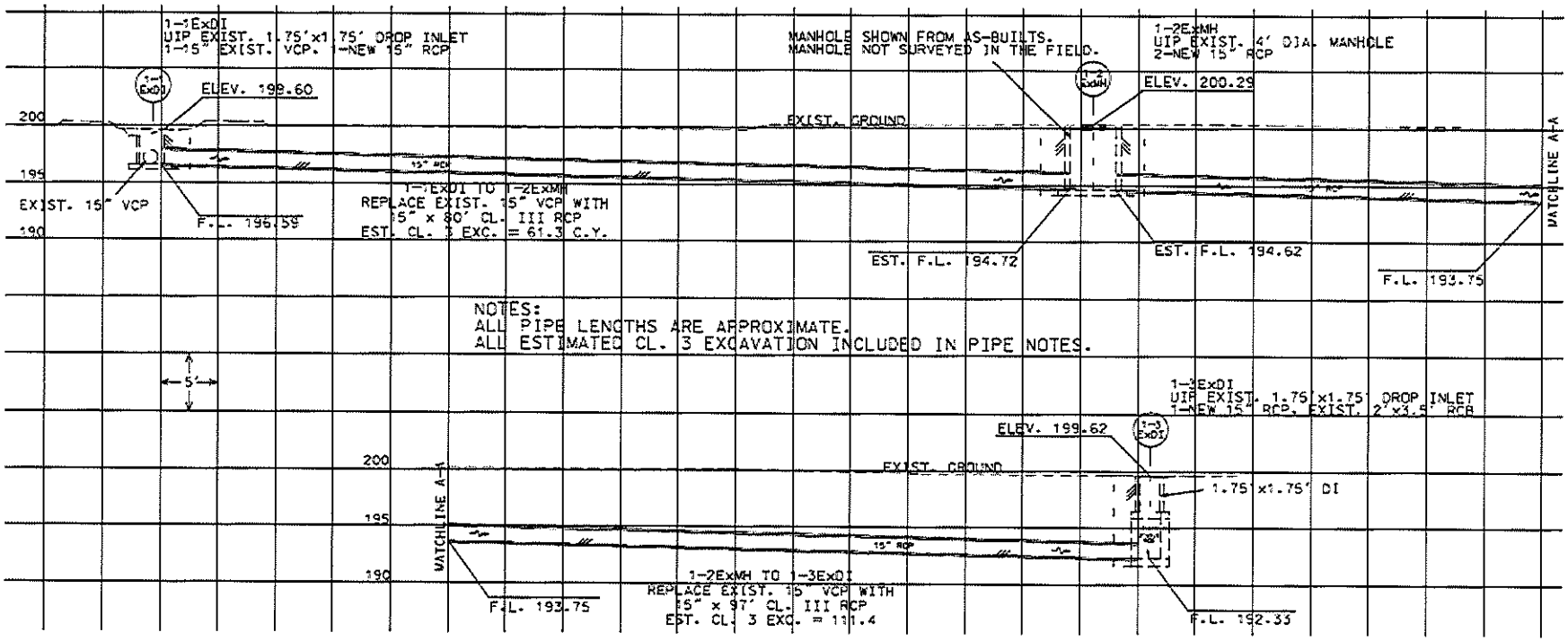

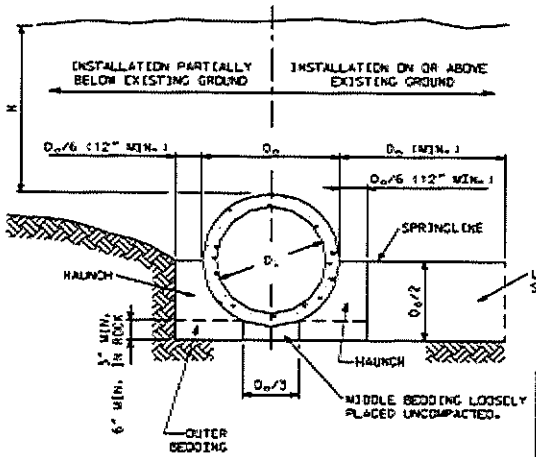

EMBANKMENT INSTALLATIONS

CONSTRUCTION SEQUENCE
1. PLACE BEDDING MATERIAL TO GRADE. DO NOT COMPACT.
2. INSTALL PIPE TO GRADE.
3. COMPACT BEDDING OUTSIDE THE MIDDLE THIRD OF THE PIPE.
4. PLACE AND COMPACT THE HAUNCH AREA UP TO THE SPRINGLINE.
5. COMPLETE BACKFILL ACCORDING TO SPECIFICATIONS.

MAXIMUM HEIGHT OF FILL OVER R.C. PIPE CULVERTS

INSTALLATION TYPE	CLASS OF PIPE				
	CLASS I	CLASS II	CLASS III	CLASS IV	CLASS V
	FEET				
TYPE 1	14	18	21	33	50
TYPE 2	9	12	16	25	38
TYPE 3	7	10	12	19	30
TYPE 4	5	7	8	13	19

NOTE: IF FILL HEIGHT EXCEEDS 50 FEET, A SPECIAL DESIGN CONCRETE PIPE WILL BE REQUIRED USING TYPE 1 INSTALLATION.

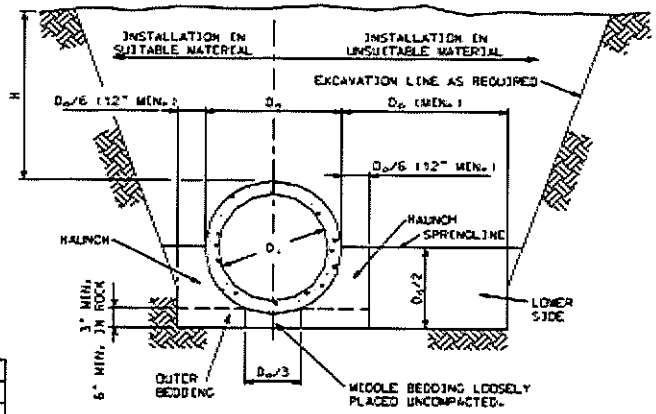

TRENCH INSTALLATION

- LEGEND -

D_i = NORMAL INSIDE DIAMETER OF PIPE.
D_o = OUTSIDE DIAMETER OF PIPE.
H = FILL COVER HEIGHT OVER PIPE (FEET)
MIN. = MINIMUM
= UNDISTURBED SOIL

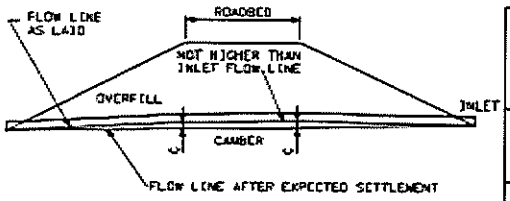

NOTE:
ON YIELDING SOIL, PIPE CULVERTS SHALL BE PLACED ON A CAMBERED FLOW LINE. THE AMOUNT OF CAMBER WILL VARY WITH SOIL CONDITION AND SHALL BE SPECIFIED ON THE DESIGN PLANS.

TYPICAL CAMBERED FLOW LINE

BEDDING AND COMPACTION REQUIREMENTS

INSTALLATION TYPE	BEDDING THICKNESS	COMPACTION REQUIREMENTS (MIN. STANDARD PROCTOR %)					
		HAUNCH AND OUTER BEDDING			LOWER SIDE BEDDING		
		CATEGORY 1 SOIL (A)	CATEGORY 2 SOIL (B)	CATEGORY 3 SOIL (C)	CATEGORY 1 SOIL (A)	CATEGORY 2 SOIL (B)	CATEGORY 3 SOIL (C)
1	$D_o/24$ MINIMUM, NOT LESS THAN 3". IF ROCK FOUNDATION, USE $D_o/12$ MINIMUM, NOT LESS THAN 6".	95	N/A	N/A	90	95	100
2	$D_o/24$ MINIMUM, NOT LESS THAN 3". IF ROCK FOUNDATION, USE $D_o/12$ MINIMUM, NOT LESS THAN 6".	90	95	N/A	85	90	95
3	$D_o/24$ MINIMUM, NOT LESS THAN 3". IF ROCK FOUNDATION, USE $D_o/12$ MINIMUM, NOT LESS THAN 6".	85	90	95	85	90	95
4	$D_o/24$ MINIMUM, NOT LESS THAN 3". IF ROCK FOUNDATION, USE $D_o/12$ MINIMUM, NOT LESS THAN 6".	NO COMPACTION REQUIRED	NO COMPACTION REQUIRED	85	NO COMPACTION REQUIRED	NO COMPACTION REQUIRED	85

(A) GRAVELLY SAND
(B) SANDY-SILT
(C) SILTY CLAY

GENERAL NOTES:

MULTIPLE PIPE CULVERTS SHALL BE INSTALLED WITH A MINIMUM CLEARANCE BETWEEN PIPES OF $\frac{1}{4}$ D_o OR 12", WHICHEVER IS GREATER, BUT NOT TO EXCEED 36".

CLASS I AND CLASS II REINFORCED CONCRETE PIPE SHALL ONLY BE USED FOR SEWERS IN TRENCHES OUTSIDE ROADBED AND STREET LIMITS.

MISSOURI HIGHWAYS AND TRANSPORTATION COMMISSION
105 WEST CAPITOL
JEFFERSON CITY, MO 65102
1-888-ASK-MODOT (1-888-275-6636)

RIGID CULVERT INSTALLATION METHODS
REINFORCED CONCRETE PIPE CULVERTS

DATE EFFECTIVE	07/01/2004	726.30F	SHEET NO. 1 OF 2
DATE REVISED	10/21/2004		

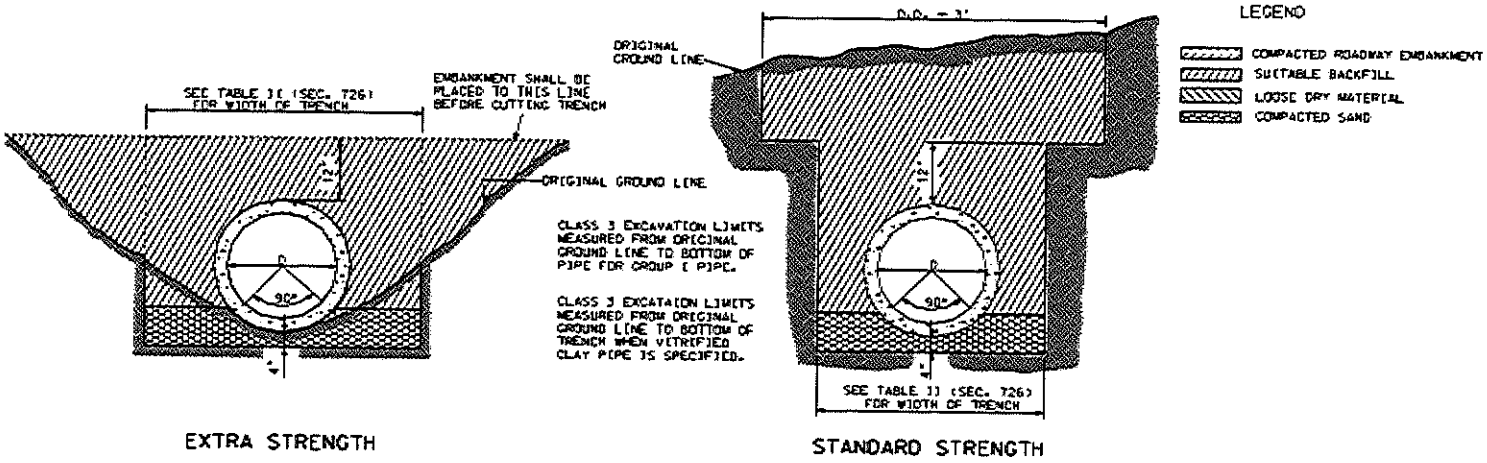

EXTRA STRENGTH

STANDARD STRENGTH

HEIGHT OF FILL OVER V.C. PIPE CULVERTS						
	STANDARD STRENGTH			EXTRA STRENGTH		
NOMINAL PIPE DIAMETER (INCH)	TRENCH WIDTH AT ONE FOOT ABOVE TOP OF PIPE (FEET)	MINIMUM FILL HEIGHT (FEET)	MAXIMUM FILL HEIGHT (FEET)	TRENCH WIDTH AT ONE FOOT ABOVE TOP OF PIPE (FEET)	MINIMUM FILL HEIGHT (FEET)	MAXIMUM FILL HEIGHT (FEET)
6	2.0	1.0	9.0			
8	2.0	1.0	7.0	2.5	4.0	12.0
10	2.5	1.0	7.0	2.5	4.0	12.0
12	2.7	1.0	6.0	3.0	4.0	13.0
15	3.5	1.0	6.0	3.0	4.0	17.0
18	3.5	1.0	6.0	3.5	4.0	17.0
21	4.0	1.0	8.0	4.0	4.0	17.0
24	4.0	1.0	8.0	4.0	3.0	19.0
30	4.5	1.0	10.0	4.5	3.0	19.0
36	5.0	1.0	11.0	5.0	3.0	19.0

MoDOT
MISSOURI HIGHWAYS AND TRANSPORTATION COMMISSION
105 WEST CAPITOL
JEFFERSON CITY, MO 65102
1-888-ASK-MODOT (1-888-275-6636)

RIGID CULVERT INSTALLATION METHODS
VITRIFIED CLAY PIPE CULVERTS

DATE EFFECTIVE: 07/01/2004
DATE PREPARED: 6/21/2004

726.30F

SHEET NO. 2 OF 2

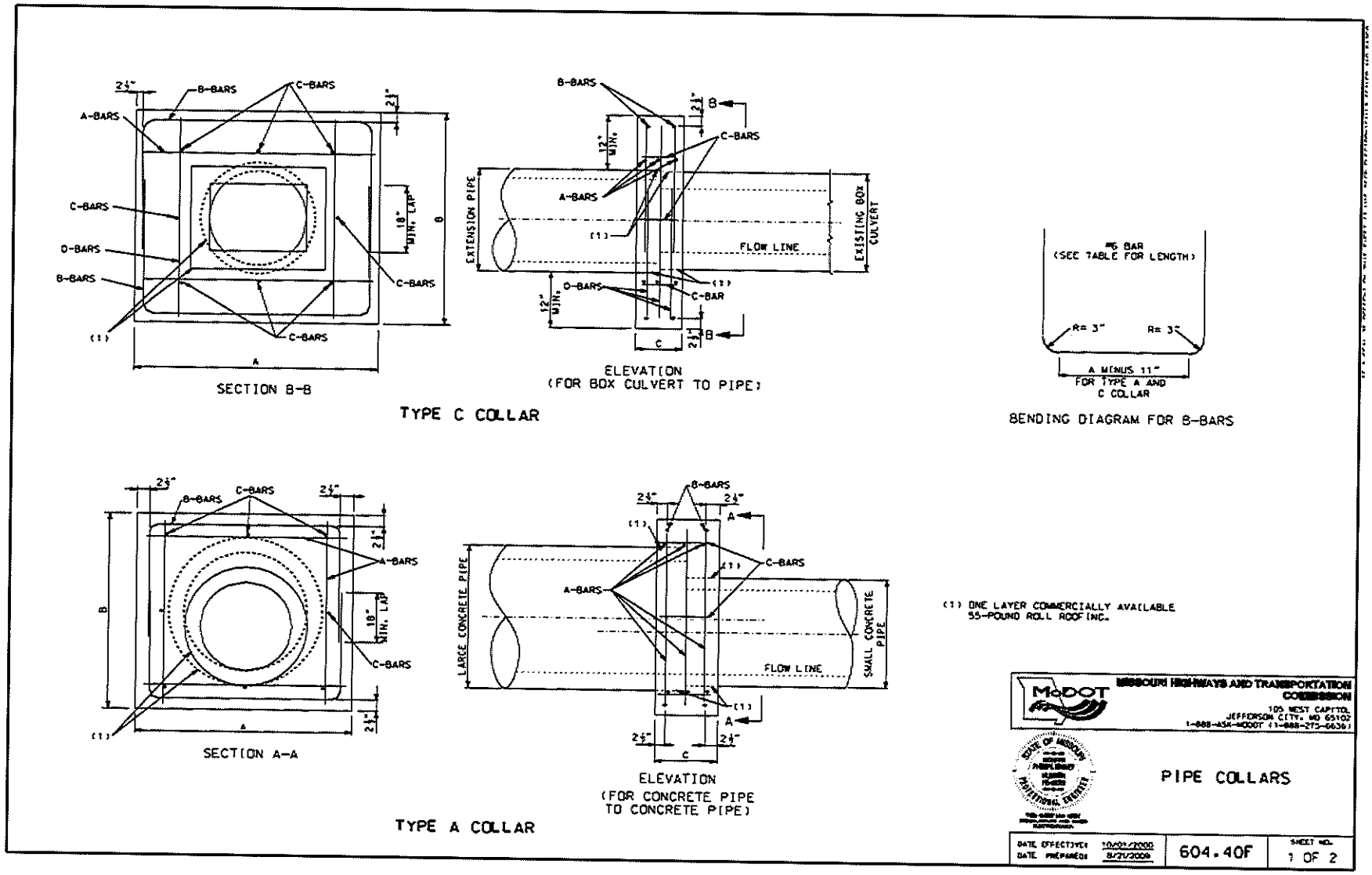
B-BARS
C-BARS
A-BARS
D-BARS
(1)
18" MIN. LAP
SECTION B-B
EXTENSION PIPE
EXISTING BOX CULVERT
FLOW LINE
C-BAR
ELEVATION
(FOR BOX CULVERT TO PIPE)
TYPE C COLLAR
#6 BAR
(SEE TABLE FOR LENGTH)
R= 3"
A MINUS 11"
FOR TYPE A AND
C COLLAR
BENDING DIAGRAM FOR B-BARS
SECTION A-A
LARGE CONCRETE PIPE
SMALL CONCRETE PIPE
ELEVATION
(FOR CONCRETE PIPE
TO CONCRETE PIPE)
TYPE A COLLAR
(1) ONE LAYER COMMERCIALLY AVAILABLE
55-POUND ROLL ROOFING.
MISSOURI HIGHWAYS AND TRANSPORTATION COMMISSION
105 WEST CAPITOL
JEFFERSON CITY, MO 65102
1-888-ASK-MODOT (1-888-275-6636)
PIPE COLLARS
DATE EFFECTIVE: 10/01/2000
DATE PREPARED: 8/21/2000
604.40F
SHEET NO.
1 OF 2