MISSOURI HIGHWAYS AND TRANSPORTATION COMMISSION
PLANS FOR PROPOSED
STATE HIGHWAY

ST. CHARLES COUNTY

T47N, R3E & R4E

DESIGN DESIGNATION

INTERSTATE 70

A.A.D.T. - 2012 = 150,000
A.A.D.T. - 2035 = 175,000
D.H.V. = 17%
T = 10.9%
V = 60 M.P.H.
D = N/A
FUNCTIONAL CLASSIFICATION- INTERSTATE (PRINCIPAL ARTERIAL)

MID RIVERS MALL DRIVE

A.A.D.T. - 2012 = 35,000
A.A.D.T. - 2035 = 41,000
T = 8%
V = 40 M.P.H.
D = 50/50
FUNCTIONAL CLASSIFICATION- PRINCIPAL ARTERIAL

VETERAN'S MEMORIAL PARKWAY (SOR)

A.A.D.T. - 2012 = 15,000
A.A.D.T. - 2035 = 17,500
T = 5%
V = 45 M.P.H.
D = N/A
FUNCTIONAL CLASSIFICATION- INTERSTATE OUTER RD. (COLLECTOR)

NO NEW RIGHT OF WAY WILL BE REQUIRED FOR THIS PROJECT

CONVENTIONAL SYMBOLS
(USED IN PLANS)

	EXISTING	NEW
BUILDINGS AND STRUCTURES		
GUARD RAIL		
CONCRETE RIGHT-OF-WAY MARKER		
STEEL RIGHT-OF-WAY MARKER		
LOCATION SURVEY MARKER		
UTILITIES		
FIBER OPTICS	FO	FO
OVERHEAD TELEPHONE		
UNDERGROUND TELEPHONE	T	T
OVERHEAD POWER		
UNDERGROUND POWER	P	P
GAS	G	G
WATER	W	W
MANHOLE	SAN	
FIRE HYDRANT	HYD	
WATER VALVE	WV	
WATER METER	WM	
DROP INLET	DI	
DITCH BLOCK		
GROUND MOUNTED SIGN	SIGN	
LIGHT POLE		
H-FRAME POWER POLE		
TELEPHONE PEDESTAL	PED	
FENCE		
CHAIN LINK	V	
WOVEN WIRE	X	
GATE POST		
BENCHMARK	BM	

NOTE: DASHED OR OPEN SYMBOLS INDICATE EXISTING FEATURES

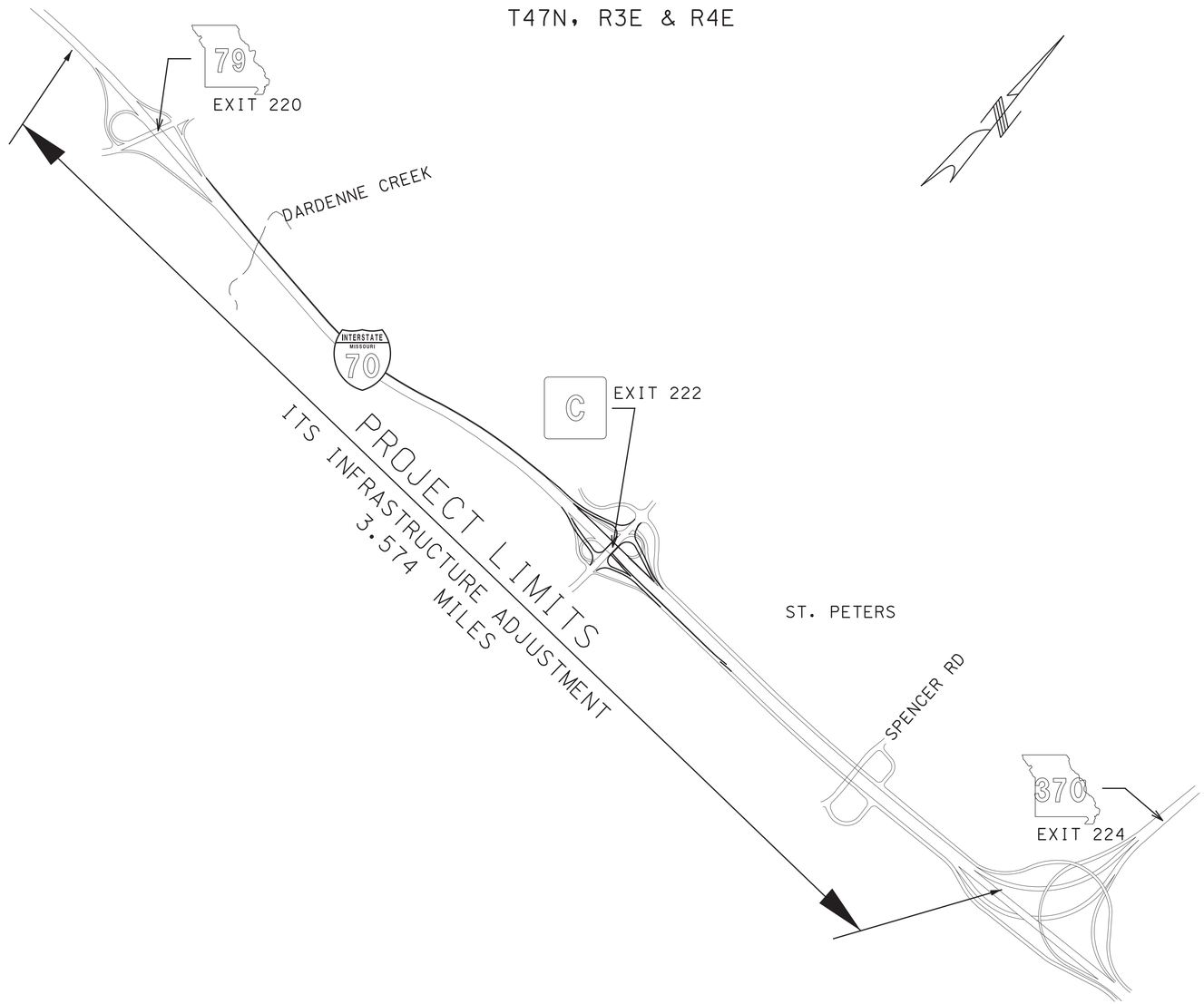

NOT TO SCALE

INDEX OF SHEETS

DESCRIPTION	SHEET NUMBER
TITLE SHEET	1
GENERAL NOTES	2
QUANTITIES (QU) (5 SHEETS)	3
PLAN SHEET INDEX	4
ITS PLAN SHEETS	5-19
COMMUNICATIONS OVERVIEW	20-21
FIBER SPLICING & BLOCK DIAGRAMS	22-37
ITS DETAILS	38-49
TRAFFIC CONTROL PLANS	50-51

LENGTH OF PROJECT

BEGINNING OF PROJECT STA. 881 + 20.00
END OF PROJECT STA. 1069 + 90.00

APPARENT LENGTH 18,870.00 FEET

STATE OF MISSOURI
CHARLES A. MILLER
NUMBER E-2002000606
REGISTERED PROFESSIONAL ENGINEER

THIS SHEET HAS BEEN SIGNED, SEALED, AND DATED ELECTRONICALLY.

DATE PREPARED: 16-NOV-2012
ROUTE: I-70 | STATE: MO
DISTRICT: SL | SHEET NO.: 1
COUNTY: ST. CHARLES
JOB NO.: J6I2412
CONTRACT ID.
PROJECT NO.
BRIDGE NO.

DESCRIPTION	DATE

MISSOURI HIGHWAYS AND TRANSPORTATION COMMISSION
105 WEST CAPITOL
JEFFERSON CITY, MO 65102
1-888-ASK-MODOT (1-888-275-6636)

HNTB
715 KIRK DRIVE
KANSAS CITY, MO 64105
(816) 472-1201

IF A SEAL IS PRESENT ON THIS SHEET IT HAS BEEN ELECTRONICALLY SEALED AND DATED.

REV.

GENERAL NOTES

1. BASELINES SHOWN ON PLANS ARE FOR INFORMATION PURPOSES ONLY AND ARE NOT STAKED IN THE FIELD.
2. FOR SYSTEM COMMUNICATION REQUIREMENTS, SEE COMMUNICATION PLANS AND SPECIAL PROVISIONS.
3. ALL BRIDGE CONDUIT RUNS SHALL NOT EXCEED 270 DEGREE OF BENDS. CONDUITS OR OTHER ENTERABLE FITTINGS SHALL BE INCLUDED IN COST OF CONDUIT.
4. CONTRACTOR SHALL MAINTAIN 2′ CONDUIT CLEARANCE FROM ALL LANDSCAPED FEATURES EXISTING WITHIN THE RIGHT OF WAY. ANY LANDSCAPING DISTURBED DURING CONSTRUCTION ACTIVITIES SHALL BE RESTORED TO ORIGINAL CONDITION AT THE EXPENSE OF THE CONTRACTOR.
5. CONTRACTOR SHALL COORDINATE HIS ACTIVITIES WITH OTHER CONTRACTORS IN THE AREA, INCLUDING CONTRACTS J6I2412 AND J6I2412B.
6. THE MAINTAINING AGENCY IS THE MHTC.
7. SITE COORDINATE SYSTEMS ARE UNIQUE FOR EACH SITE. THESE PLANS ARE TO COINCIDE WITH THE NAD 1983 COORDINATE SYSTEM AT ONLY ONE CONTROL POINT LOCATION PER SITE.
8. ALL UTILITIES SHALL BE LOCATED AND MARKED PRIOR TO INITIATION OF CONSTRUCTION PER SITE. THE CONTRACTOR SHALL BE RESPONSIBLE FOR CONTACTING UTILITIES AND LOCATOR SERVICES AND SCHEDULING THE LOCATION OF UNDERGROUND UTILITIES. THE CONTRACTOR SHALL ALSO CONTACT ANY AND ALL UTILITIES AND LOCAL GOVERNMENT AGENCIES NOT PARTICIPATING IN LOCATION SERVICES.
9. PROPOSED ITS EQUIPMENT LOCATIONS ARE APPROXIMATE AND MAY BE MODIFIED TO AVOID CONFLICTS WITH UNDERGROUND UTILITIES OR OTHER OBSTRUCTIONS. THE CONTRACTOR SHALL RECEIVE APPROVAL FROM THE ENGINEER PRIOR TO REVISING THE LOCATION OF ANY OF THE ITS EQUIPMENT.
10. LOCATION OF ITS EQUIPMENT ON THE PLANS BY THE ENGINEER HAS BEEN PERFORMED WITHOUT FULL CONSIDERATION OF EXISTING UNDERGROUND UTILITES. IT SHALL BE THE CONTRACTOR'S RESPONSIBILITY TO DETERMINE ANY CONFLICTS WITH EXISTING UTILITIES AT SITES IN THE FIELD PRIOR TO INITIATION OF CONSTRUCTION PER SITE. THE CONTRACTOR IS RESPONSIBLE FOR CONTACTING THE ENGINEER UPON DETERMINATION OF ANY UTILITY CONFLICTS.
11. ALL ITS EQUIPMENT CALLED OUT BY PLANS AND SPECIFICATIONS AS "INSTALL" EQUIPMENT, INCLUDING CCTV ASSEMBLIES AND DMS ASSEMBLIES, SHALL INCLUDE ALL TRANSPORTATION, INSTALLATION AND TESTING OF MISSOURI DEPARTMENT OF TRANSPORTATION FURNISHED EQUIPMENT IN ACCORDANCE WITH THE SPECIFICATIONS.
12. ALL TRAFFIC CONTROL PLANS AND LANE CLOSURES SHALL BE PRE-APPROVED BY THE ENGINEER.
13. ALL WORK SHALL INCLUDE THE RESTORATION OF ANY DISTURBED AREAS AS DIRECTED BY THE ENGINEER. ALL GRADING WORK SHALL PROVIDE POSITIVE DRAINAGE.
14. IT SHALL BE THE CONTRACTOR'S RESPONSIBILITY TO REPAIR ANY EXISTING CONDUIT, CONDUCTORS OR OTHER FACILITIES DAMAGED DURING CONSTRUCTION. ALL EXISTING IMPROVEMENTS, NOT SPECIFICALLY IDENTIFIED AS BEING REMOVED OR RELOCATED IN THE PLANS THAT ARE DISTURBED OR OTHERWISE DAMAGED BY THE CONTRACTOR, SHALL BE REPLACED IN KIND BY THE CONTRACTOR, WITH NO ADDITIONAL COMPENSATION.
15. PROPOSED GUARDRAIL AND CRASHWORTHY END TREATMENTS SHALL BE IN PLACE OR TEMPORARY BARRIER MUST BE IN PLACE PRIOR TO CONSTRUCTION OF ANY FOUNDATIONS LOCATED WITHIN 34 FEET OF AN ACTIVE TRAVEL LANE.
16. THE PLANS DEPICT CONDUIT ROUTING IN SCHEMATIC FORM ONLY. THE CONTRACTOR SHALL DETERMINE FINAL ROUTING BASED ON ACTUAL FIELD CONDITIONS PRIOR TO CONSTRUCTION AT EACH SITE, INCLUDING UTILITY LOCATOR SERVICE MARKINGS, TO PREVENT CONFLICTS WITH EXISTING UTILITIES.
17. ALL CONDUITS SHALL BE NEW. SINGLE CELL CONDUITS ON BRIDGES SHALL BE ALUMINUM.
18. PULL ROPES ARE REQUIRED IN ALL EMPTY CONDUIT CELLS. PULL ROPES SHALL BE POLYPROPYLENE WITH A MINIMUM TENSILE STRENGTH OF 600 POUNDS.
19. THE CONTRACTOR SHALL FIELD REVIEW NECESSARY ROUTING AND MOUNTING HARDWARE, INCLUDING BRIDGE HANGERS, FITTINGS, EXPANSION JOINTS AND JUNCTION BOXES FOR ALL EXTERNALLY MOUNTED CONDUITS PRIOR TO SUBMITTAL OF BID TO DETERMINE THE TYPES AND EXTENT OF INCIDENTAL ITEMS TO BE INCLUDED IN THE UNIT PRICE OF CONDUIT.
20. THE CONTRACTOR SHALL FIELD REVIEW NECESSARY ROUTING OF CONDUIT AND LOCATION OF PULL BOXES PRIOR TO SUBMITTAL OF BID TO DETERMINE THE TYPES AND EXTENT OF INCIDENTAL REMOVAL, RELOCATION AND REPLACEMENT ITEMS TO BE INCLUDED IN THE UNIT PRICE OF CONDUIT AND PULL BOXES.
21. WARNING TAPE IS REQUIRED IN ALL TRENCHES CONTAINING CONDUIT.
22. JACKETED 0.10″ THHN SOLID BLUE LOCATOR WIRE SHALL BE PLACED IN ALL UNDERGROUND NON-METALLIC CONDUITS BONDED TO GROUNDING RODS WITHIN A PULL BOX. APPROVED LOCATOR WIRE SHALL BE MOUNTED TO THE SIDE WALL OF EACH PULL BOX.
23. CONTRACTOR MAY BORE OR HORIZONTALLY DRILL WHEREVER TRENCHING IS SHOWN AT THE CONTRACTOR'S EXPENSE.
24. GROUND CONDUCTOR SHALL BE 1/C #6 UNLESS OTHERWISE NOTED ON THE PLANS.
25. EXPANSION FITTINGS SHALL BE PROVIDED WHEN CONDUIT PASSES ACROSS EXISTING EXPANSION DEVICES AND FILLED JOINTS ON BRIDGES INCLUDING FILLED JOINTS IN SAFETY BARRIER CURBS. THE DISTANCE BETWEEN EXPANSION FITTINGS SHALL NOT BE GREATER THAN 150 FEET. EXPANSION FITTINGS ON CONDUIT SHALL PROVIDE A MINIMUM MOVEMENT IN EITHER DIRECTION OF 4″ AT OPEN JOINTS, BETWEEN ABUTMENT AND SUPER-STRUCTURES ENCOUNTERED AFTER RISING OUT OF THE GROUND AND 2″ AT FILLED JOINTS. EXPANSION FITTINGS SHALL BE PROVIDED WITH A 2′ BONDING JUMPER AROUND FITTING. BONDING JUMPER SHALL BE COMPATABLE WITH CONDUIT MATERIAL. LIQUID TIGHT FLEXIBLE METAL CONDUIT SHALL BE USED IN LOCATIONS WHERE CONDUIT CROSSES OVER BRIDGE SUPERSTRUCTURE, SUBSTRUCTURE OR SIGN STRUCTURES, OR AS OTHERWISE SHOWN IN THE PLANS.
26. THE GALVANIZED CONE EXPANSION ANCHOR SYSTEM SHALL BE USED FOR ATTACHING CONDUIT SUPPORTS AND JUNCTION BOXES TO STRUCTURAL CONCRETE.
27. ALL GROUNDING SYSTEMS SHALL BE IN ACCORDANCE WITH THE NATIONAL ELECTRICAL CODE.
28. SLACK FIBER OPTIC CABLE SHALL BE STORED ACCORDING WITH THE SPECIAL PROVISIONS. 30′ OF SLACK FIBER OPTIC CABLE SHALL BE STORED IN EVERY PULL BOX. FOR EACH FIBER OPTIC CABLE THAT ENTERS A PULL BOX ADJACENT TO A CABINET, 60′ OF SLACK CABLE SHALL BE STORED.
29. THE CONTRACTOR SHALL MAINTAIN POWER AND COMMUNICATIONS TO ALL EXISTING ITS DEVICES. THE ONLY EXCEPTION SHALL BE WHEN THE CONTRACTOR CUTS FIBER OPTIC CABLE SERVING THOSE DEVICES TO TIE THEM IN TO THE PROPOSED COMMUNICATIONS SYSTEM AS SHOWN IN THE PLANS. THESE CUTS SHALL BE MADE ONLY AFTER ALL PROPOSED DEVICES ARE FULLY OPERATIONAL, AND HAVE PASSED THEIR OPERATIONAL TESTS. NOTIFY THE ENGINEER AT LEAST 7 DAYS BEFORE CUTTING ANY EXISTING FIBER CABLE.
30. TRENCH EXCAVATION AND DIRECTIONAL DRILLING REQUIRED FOR THE INSTALLATION OF CONDUITS SHALL INCLUDE THE RESTORATION OF THE AREA IN ACCORDANCE WITH THE SPECIFICATIONS. THE RESTORATION SHALL INCLUDE FENCE REMOVAL AND REPLACEMENT, SIGN RELOCATION, UNDERDRAINS, AND RIPRAP OR OTHER EXISTING SLOPE PROTECTION APPURTENANCE.
31. TREES AND SHRUBS DAMAGED BY THE CONTRACTOR SHALL BE REPLACED IN KIND AT THE CONTRACTOR'S EXPENSE, AS DIRECTED BY THE ENGINEER.
32. ALL ELECTRICAL CABLES IN PULL BOXES AND EQUIPMENT CABINETS SHALL BE PROVIDED WITH INDIVIDUAL BRASS TAGS, DIE STAMPED WITH PHASE AND CIRCUIT IDENTIFICATIONS.

GENERAL NOTES

STATE OF MISSOURI
CHARLES A. MILLER
NUMBER E-2002000606
REGISTERED PROFESSIONAL ENGINEER

THIS SHEET HAS BEEN SIGNED, SEALED, AND DATED ELECTRONICALLY.

DATE PREPARED	
16-NOV-2012	
ROUTE: I-70	STATE: MO
DISTRICT: SL	SHEET NO.: 2
COUNTY: ST. CHARLES	
JOB NO.: J6I2412	
CONTRACT ID.	
PROJECT NO.	
BRIDGE NO.	

DATE	DESCRIPTION

MISSOURI HIGHWAYS AND TRANSPORTATION COMMISSION
105 WEST CAPITOL
JEFFERSON CITY, MO 65102
1-888-ASK-MODOT (1-888-275-6636)

HNTB
715 KIRK DRIVE
KANSAS CITY, MO 64105
(816) 472-1201

IF A SEAL IS PRESENT ON THIS SHEET IT HAS BEEN ELECTRONICALLY SEALED AND DATED.

REV.

MISSOURI HIGHWAYS AND TRANSPORTATION COMMISSION

SUMMARY OF QUANTITIES

MOBILIZATION
TOTAL = 1 LUMP SUM

REMOVAL OF IMPROVEMENTS

SHEET NUMBER	FROM STA.	TO STA.	ALIGNMENT	LOCATION	DESCRIPTION OF REMOVAL
6	895+01	899+12	I-70	R & L	REMOVE CABLES
6	896+82		I-70	R	REMOVE ITS AND CLASS 1 PULL BOX
6	901+40	904+00	I-70	L	REMOVE CABLES
7	904+00	918+00	I-70	L	REMOVE CABLES
7	907+45	907+55	I-70	R & L	REMOVE CABLES
8	918+00	931+50	I-70	L	REMOVE CABLES
8	920+49		I-70	L	REMOVE ITS PULL BOX
8	923+04		I-70	L	REMOVE ITS PULL BOX
9	931+50	945+50	I-70	L	REMOVE CABLES
9	932+52		I-70	L	REMOVE ITS PULL BOX
9	940+94		I-70	L	REMOVE ITS PULL BOX
9	945+39		I-70	L	REMOVE ITS PULL BOX
10	945+50	959+50	I-70	L	REMOVE CABLES
10	948+21		I-70	L	REMOVE ITS PULL BOX
10	953+52		I-70	L	REMOVE ITS PULL BOX
11	959+50	973+50	I-70	L	REMOVE CABLES
11	964+30		I-70	L	REMOVE ITS PULL BOX
11	973+06		I-70	L	REMOVE ITS AND CLASS 1 PULL BOX
12	973+50	986+50	I-70	L	REMOVE CABLES
12	975+13		I-70	L	REMOVE CLASS 1 PULL BOX
12	981+93		I-70	L	REMOVE ITS PULL BOX
12	984+36		I-70	L	REMOVE ITS PULL BOX
13	986+50	992+00	I-70	L	REMOVE CABLES
13	990+38	992+00	I-70	L	REMOVE CABLES
13	987+90	989+10	I-70	L	REMOVE CABLES
13	989+08		I-70	L	REMOVE ITS PULL BOX
13	989+17		I-70	L	REMOVE CLASS 1 PULL BOX
14	992+00	1006+00	I-70	L	REMOVE CABLES
14	995+15	1006+00	I-70	L & R	REMOVE CABLES
14	1002+46	1006+00	I-70	R	REMOVE CABLES
14	992+08		I-70	L	REMOVE ITS & CLASS 1 PULL BOX
14	995+20		I-70	L	REMOVE ITS PULL BOX
14	996+10		I-70	R	REMOVE ITS PULL BOX
14	998+94		I-70	L	REMOVE ITS PULL BOX
14	1002+74		I-70	R	REMOVE ITS & CLASS 1 PULL BOX
15	1006+00	1011+72	I-70	L	REMOVE CABLES
15	1006+00	1008+41	I-70	R	REMOVE CABLES
15	1009+22		I-70	L	REMOVE ITS PULL BOX
15	1008+41		I-70	R	REMOVE ITS & CLASS 1 PULL BOX
15	1009+29		I-70	R	REMOVE ITS PULL BOX
				SUB TOTAL	1.0
				PAY TOTAL	1.0 LUMP SUM

PULL BOXES AND JUNCTION BOXES

SHEET NUMBER	ITS PULL BOX (EA)	CLASS 1 PULL BOX (EA)	CLASS 2 PULL BOX (EA)	DRILL PULL BOX (EA)	INTERCEPT CONDUIT WITH PULL BOX (EA)
6	2	1		1	1
7	1			2	
8	2				
9	2				
10	3				
11	3	3			
12	2				
13	5	4	3	1	2
14	2	2			
15	3	1		1	2
PAY TOTAL	25	11	3	5	5

CONDUIT SYSTEM ON STRUCTURE

SHEET NUMBER	LINEAR FT	COMMENT
8	281	CONDUIT SYSTEM ON STRUCTURE OVER DARDENNE CREEK
PAY TOTAL	281	

SUMMARY OF QUANTITIES
SHEET 1 OF 5

STATE OF MISSOURI
CHARLES A. MILLER
NUMBER E-2002000606
REGISTERED PROFESSIONAL ENGINEER

THIS SHEET HAS BEEN SIGNED, SEALED, AND DATED ELECTRONICALLY.

DATE PREPARED: 16-NOV-2012
ROUTE: I-70 | STATE: MO
DISTRICT: SL | SHEET NO.: 3
COUNTY: ST. CHARLES
JOB NO.: J6I2412
CONTRACT ID.
PROJECT NO.
BRIDGE NO.

DATE	DESCRIPTION

IF A SEAL IS PRESENT ON THIS SHEET IT HAS BEEN ELECTRONICALLY SEALED AND DATED.

MISSOURI HIGHWAYS AND TRANSPORTATION COMMISSION
105 WEST CAPITOL
JEFFERSON CITY, MO 65102
1-888-ASK-MODOT (1-888-275-6636)

HNTB
715 KIRK DRIVE
KANSAS CITY, MO 64105
(816) 472-1201

REV.

MISSOURI HIGHWAYS AND TRANSPORTATION COMMISSION

SUMMARY OF QUANTITIES

COMMUNICATIONS CONDUIT AND CABLING

CONDUIT (FEET)												CABLE (FEET)								COMMENTS
				HDPE (FT)				PVC (FT)												
				TRENCH		DRILL		TRENCH												
SHEET NUMBER	FROM	TO	CTR TO CTR DISTANCE	2"	2-2"	2"	2-2"	2"	2-2"	3-2"	3"	FROM	TO	CTR TO CTR DISTANCE	24F SM FO CABLE	72F SM FO CABLE	HYBRID 12SM/12MM FO CABLE	CAT-5E STP CABLE	INSTALL RELOCATED CABLE	
5	IPB380	IPB382	848									IPB380	IPB382	848		908				
5-6	IPB382	IPB384	535									IPB382	IPB384	535		565				
6	IPB384	IPB386	246				244					IPB384	IPB386	246		276			276	
6	IPB386	MI070E220.5D	10					13				IPB386	MI070E220.5D	10	70				70	
6	IPB386	IPB390	259				257					IPB386	IPB390	259	518					
6	IPB390	MI070W220.5C	23									IPB390	MI070W220.5C	23	166					
6	IPB396	MI070W220.4Z	77									IPB396	MI070W220.4Z	77					140	
6-7	IPB386	IPB394	1,022		899		121					IPB386	IPB394	1,022	1,022	1,052				
7	IPB394	MI070E220.7D	24									IPB394	MI070E220.7D	24	168					
7	IPB394	IPB395	515		354		159					IPB394	IPB395	515	545	545				
7-8	IPB395	IPB398	867		865							IPB395	IPB398	867	897	897				
8	IPB398	IPB400	281									IPB398	IPB400	281	311	311				
8-9	IPB400	IPB402	1,010		1,008							IPB400	IPB402	1,010	1,040	1,040				
9	IPB402	IPB404	702		652		48					IPB402	IPB404	702	732	732				
9-10	IPB404	IPB408	591				589					IPB404	IPB408	591	621	621				
10	IPB408	IPB409	784		643		139					IPB408	IPB409	784	814	814				
10	IPB409	IPB410	452		382		68					IPB409	IPB410	452	482	482				
10-11	IPB410	IPB411	267	18								IPB410	IPB411	267	564					
11	IPB411	MI070W221.4D	31									IPB411	MI070W221.4D	31	182					
10-11	IPB410	IPB412	646				644					IPB410	IPB412	646	676	676				
11	IPB412	IPB413	454		452							IPB412	IPB413	454	484	484				
11	IPB413	IPB414	199				197					IPB413	IPB414	199	428					
11	IPB414	MI070W221.9S	10					13				IPB414	MI070W221.9S	10	140					
11-12	IPB413	IPB415	649		647							IPB413	IPB415	649	679	679				
12	IPB415	IPB416	642		640							IPB415	IPB416	642	672	672				
12-13	IPB416	IPB420	694	495		197						IPB416	IPB420	694	1,448					
12-13	IPB416	IPB417	802		800							IPB416	IPB417	802	832	832				
13	IPB420	IPB422	202	61								IPB420	IPB422	202	404				208	
13	IPB422	MI070W222.2C	10								13	IPB422	MI070W222.2C	10	210			48	18	
13	IPB422	EPB232	190	188								IPB422	EPB232	190				196		
13	EPB232	MI070W222.2D	10					13				EPB232	MI070W222.2D	10				40		
13	IPB422	IPB423	220			218						IPB422	IPB423	220	250					
13	IPB423	MI070W222.1Z	14					17				IPB423	MI070W222.1Z	14	148					
13	IPB423	IPB424	405	160		243						IPB423	IPB424	405	405		405			
13	IPB424	MR00CN000.1Z	11					14				IPB424	MR00CN000.1Z	11	71			49		
13	IPB424	MR00CN000.1C	22					25				IPB424	MR00CN000.1C	22			82	30		
13	IPB423	EPB235	327	134								IPB423	EPB235	327			357			
13	EPB235	EPB236	256			254						EPB235	EPB236	256			286			
13	EPB236	EPB237	355	353								EPB236	EPB237	355			385			
13	EPB237	SUEMANDY	835									EPB237	SUEMANDY	835			895			
13-14	IPB417	IPB418	745		393		350					IPB417	IPB418	745	775	775				
14	IPB418	IPB425	426		424							IPB418	IPB425	426	456	456				
14	IPB425	MI070E222.5S	91			94						IPB425	MI070E222.5S	91	176					
14-15	IPB425	IPB433	638		512		124					IPB425	IPB433	638	1,336	668				
15	IPB433	IPB434	532		530							IPB433	IPB434	532	1,064	562				
15	IPB434	MI070E222.6D	31					34				IPB434	MI070E222.6D	31	182				182	
15	IPB434	IPB435	294				292					IPB434	IPB435	294		324			324	
15	IPB435	IPB436	628									IPB435	IPB436	628		658				
15-16	IPB436	IPB438	940									IPB436	IPB438	940		970				
16-17	IPB438	IPB440	350									IPB438	IPB440	350		380				
17	IPB440	IPB442	140									IPB440	IPB442	140		170				
17	IPB442	IPB444	892									IPB442	IPB444	892		922				
17-18	IPB444	IPB446	971									IPB444	IPB446	971		1,001				
18-19	IPB446	IPB448	1,005									IPB446	IPB448	1,005		1,035				
19	IPB448	IPB450	302									IPB448	IPB450	302		332				
19	IPB450	IPB452	613									IPB450	IPB452	613		613				
19	IPB452	MI070W223.7T	15									IPB452	MI070W223.7T	15		75				
		SUB TOTAL		1,409	9,201	1,006	3,232	129			13		SUB TOTAL		18,968	20,527	2,410	363	1,218	
		PAY TOTAL		1,409	9,201	1,006	3,232	129			13		PAY TOTAL		18,968	20,527	2,410	363	1,218	

SUMMARY OF QUANTITIES
SHEET 2 OF 5

STATE OF MISSOURI
CHARLES A. MILLER
NUMBER E-2002000606
REGISTERED PROFESSIONAL ENGINEER

THIS SHEET HAS BEEN SIGNED, SEALED, AND DATED ELECTRONICALLY.

DATE PREPARED: 16-NOV-2012
ROUTE: I-70 | STATE: MO
DISTRICT: SL | SHEET NO.: 3
COUNTY: ST. CHARLES
JOB NO.: J6I2412
CONTRACT ID.
PROJECT NO.
BRIDGE NO.

DATE	DESCRIPTION

MISSOURI HIGHWAYS AND TRANSPORTATION COMMISSION
105 WEST CAPITOL
JEFFERSON CITY, MO 65102
1-888-ASK-MODOT (1-888-275-6636)

HNTB
715 KIRK DRIVE
KANSAS CITY, MO 64105
(816) 472-1201

IF A SEAL IS PRESENT ON THIS SHEET IT HAS BEEN ELECTRONICALLY SEALED AND DATED.

REV.

MISSOURI HIGHWAYS AND TRANSPORTATION COMMISSION

SUMMARY OF QUANTITIES

POWER

SHEET NO.	FROM	TO	CTR TO CTR DISTANCE	CONDUIT (FT) HDPE CONDUIT 2" TRENCH	CONDUIT (FT) HDPE CONDUIT 2" DRILL	CONDUIT (FT) PVC CONDUIT 2" TRENCH	CONDUIT (FT) PVC CONDUIT 3" TRENCH	CONDUIT (FT) PVC CONDUIT 3" DRILL	CABLE (FT) POWER 1-1C#8	CABLE (FT) POWER 1-1C#6	CABLE (FT) POWER 1-1C#4	CABLE (FT) POWER 1-1C#2	CABLE (FT) POWER 1-1C#1	CABLE (FT) POWER 1-2C#14	CABLE (FT) BARE GROUND BARE GR 1C#8	CABLE (FT) BARE GROUND BARE GR 1C#6	CABLE (FT) BARE GROUND BARE GR 1C#4	CABLE (FT) BARE GROUND BARE GR 1C#2	CABLE (FT) BARE GROUND BARE GR 1C#1	INSTALL RELOCATED POWER CABLES	RELOCATE TYPE 2 POWER SUPPLY	MODIFY EXISTING POWER SUPPLY ASSEMBLY	UTILITY TRANSFORMER PAD	COMMENT
6	MI070E220.5D	EPB217	10			13														18				
6	EPB217	EPB216	253																	259				
11	UTILITY	PS	10				18					159									1			35 FEET FOR UTILITY
11	PS	EP230	10			13							72						24					
11	EP230	EP228	120	118									378						126					
11	EP228	EP226	148	146									462						154					
11	EP226	MI070W221.9S	10			13							54						18					
13	IPB420	IPB422	202																	208				
13	MI070W222.2C	IPB422	10											24						18				
13	IPB422	EPB232	190											196										
13	EPB232	MI070W222.2D	10											18										
13	MI070W222.2C	EPB230	10																	18				
13	EPB230	EPB232	350		348															356				
13	IPB424	MR00CN000.1Z	11											19										
13	IPB424	MR00CN000.1C	22											36										
13	PS	EPB233	5						57						19							1		
13	EPB233	EPB234	217		215				669						223									
13	EPB234	MR00CN000.1C	10			13			54						18									
14	MI070E222.5S	EPB238	94		97							399						133						
14	EPB238	EPB239	109	107								345						115						
14	EPB239	PS	10			13						54						18						
14	PS	UTILITY	10				18					78									1			8 FEET FOR UTILITY
14-15	TRNSFMR.	EX. TRNSFMR.	739				617	130															1	
15	PS	EPB244	10							72						24								
15	EPB244	EPB245	74							240						80								
15	EPB245	EPB246	275	273						843						281								
15	EPB246	MI070E222.6D	10			13				54						18								
			SUB TOTAL	644	660	78	653	130	780	1209		1035	966	293	260	403		266	322	877	2	1	1	
			PAY TOTAL	644	660	78	653	130	780	1210		1040	970	290	260	400		270	320	877	2	1	1	

SUMMARY OF
QUANTITIES
SHEET 3 OF 5

STATE OF MISSOURI
CHARLES A. MILLER
NUMBER E-2002000606
REGISTERED PROFESSIONAL ENGINEER

THIS SHEET HAS BEEN SIGNED, SEALED, AND DATED ELECTRONICALLY.

DATE PREPARED 16-NOV-2012

ROUTE I-70 | STATE MO
DISTRICT SL | SHEET NO. 3
COUNTY ST. CHARLES
JOB NO. J6I2412
CONTRACT ID.
PROJECT NO.
BRIDGE NO.

DESCRIPTION | DATE

MISSOURI HIGHWAYS AND TRANSPORTATION COMMISSION
105 WEST CAPITOL
JEFFERSON CITY, MO 65102
1-888-ASK-MODOT (1-888-275-6636)

HNTB
715 KIRK DRIVE
KANSAS CITY, MO 64105
(816) 472-1201

IF A SEAL IS PRESENT ON THIS SHEET IT HAS BEEN ELECTRONICALLY SEALED AND DATED.

REV.

MISSOURI HIGHWAYS AND TRANSPORTATION COMMISSION

SUMMARY OF QUANTITIES

FIBER OPTIC

SHEET NUMBER	FUSION SPLICE (EA)	FO PIGTAIL SM (EA)	FO PIGTAIL MM (EA)	FO JUMPER SM (EA)	FO JUMPER MM (EA)	RACK-MOUNTED INTERCONNECT CENTER (EA)	WALL-MOUNTED INTERCONNECT CENTER (EA)
22	72						
23	26	4		2			
24-25	54	6					
26	4	4					
27	26	4					
28	26	4					
29	26	4					
30	28	4					
31	26	4		4			1
32	4	4		4			1
33	2	2					
34	30	8					
35	72	4					
36	8	4	4			1	
37	8	4	4				
PAY TOTAL	412	60	8	10		1	2

RADAR DETECTOR

SHEET NUMBER	DEVICE ID	STATION	RELOCTE RADAR DETECTOR STATION (EA)	RADAR DETECTOR POLE FOUNDATION (EA)	RELOCATE RADAR DETECTOR (EA)	REMOVE RADAR DETECTOR STATION (LS)
6	MI070E220.5D	897+40	1	1		
13	MI070W222.2D	987+29	1	1		
13	MI070W222.3D	989+07			1	
14	MI070W222.3D	992+15				1
15	MI070E222.6D	1012+01	1	1		
		PAY TOTAL	3	3	1	1

COMMUNICATIONS

SHEET NUMBER	DEVICE ID	STATION	INSTALL COMMUNICATIONS EQUIPMENT (EA)	VIDEO SWITCHER (EA)	IP VIDEO ENCODER (EA)
13	MR00CN000.1Z	990+74	1	1	1
		PAY TOTAL	1	1	1

DMS

SHEET NUMBER	DEVICE ID	STATION	3.5' DIA. DRILLED SHAFT (LF)	SONIC LOGGING TEST (EA)	RELOCATE DMS (EA)
11	MI070W221.9S	969+86	29.0	1	1
14	MI070E222.5S	1000+08	29.0	1	1
		PAY TOTAL	58.0	2	2

CCTV CAMERA

SHEET NUMBER	DEVICE ID	STATION	2.0' DIA. DRILLED SHAFT (LF)	2.5' DIA. DRILLED SHAFT (LF)	RELOCATE 50' CCTV CAMERA (EA)	30' CCTV CAMERA POLE (EA)	INSTALL CCTV CAMERA ASSEMBLY (EA)	RELOCATE CITY CAMERA & COMM. EQPUIPMENT (LS)
13	MI070W222.2C	989+07		16.0	1			
13	MR00CN000.1C	990+66	12.0			1	1	1
		PAY TOTAL	12.0	16.0	1	1	1	1

CABINET & CABINET FOUNDATION

SHEET NUMBER	DEVICE ID	STATION	TYPE 7 CABINET (EA)	SIGNAL CABINET BASE WRAP & CABINET SHIFT (EA)
13	MR00CN000.1C	990+66	1	
13	MR00CN000.1Z	990+74		1
		PAY TOTAL	1	1

COMMISSION FURNISH EQUIPMENT✳ (INFORMATION ONLY)

SHEET NUMBER	DEVICE ID	STATION	CISCO IE 3000 ETHERNET SWITCH	ETHERNET SFP	DEVICE SERVER	IP CCTV CAMERA ASSEMBLY
13	MR00CN000.1Z	990+74	1	2	2	
13	MR00CN000.1C	990+66				1
		TOTAL	1	2	2	1

✳ INSTALLATION OF THIS EQUIPMENT IS COVERED BY PAY ITEM "INSTALL COMMUNICATIONS EQUIPMENT".

SUMMARY OF QUANTITIES
SHEET 4 OF 5

STATE OF MISSOURI
CHARLES A. MILLER
NUMBER E-2002000606
REGISTERED PROFESSIONAL ENGINEER

THIS SHEET HAS BEEN SIGNED, SEALED, AND DATED ELECTRONICALLY.

DATE PREPARED: 16-NOV-2012
ROUTE: I-70 | STATE: MO
DISTRICT: SL | SHEET NO.: 3
COUNTY: ST. CHARLES
JOB NO.: J6I2412
CONTRACT ID.
PROJECT NO.
BRIDGE NO.

DATE	DESCRIPTION

MISSOURI HIGHWAYS AND TRANSPORTATION COMMISSION
105 WEST CAPITOL
JEFFERSON CITY, MO 65102
1-888-ASK-MODOT (1-888-275-6636)

HNTB
715 KIRK DRIVE
KANSAS CITY, MO 64105
(816) 472-1201

IF A SEAL IS PRESENT ON THIS SHEET IT HAS BEEN ELECTRONICALLY SEALED AND DATED.

REV.

EFFECTIVE: 08-01-2012

SIGN	SIZE (IN.)	AREA (SQ. FT.)	QTY	TOTAL AREA	QTY RELOC	TOTAL RELOC AREA	DESCRIPTION
WARNING SIGNS							
W01-1L	48X48	16.00					TURN (SYMBOL LEFT ARROW)
W01-1R	48X48	16.00					TURN (SYMBOL RIGHT ARROW)
W01-2L	48X48	16.00					CURVE (SYMBOL LEFT ARROW)
W01-2R	48X48	16.00					CURVE (SYMBOL RIGHT ARROW)
W01-3L	48X48	16.00					REVERSE TURN (SYMBOL LEFT ARROW)
W01-3R	48X48	16.00					REVERSE TURN (SYMBOL RIGHT ARROW)
W01-4L	48X48	16.00					REVERSE CURVE (SYMBOL LEFT ARROW)
W01-4R	48X48	16.00					REVERSE CURVE (SYMBOL RIGHT ARROW)
W01-4bL	48X48	16.00					DOUBLE ARROW REVERSE CURVE (SYMBOL LEFT ARROWS)
W01-4bR	48X48	16.00					DOUBLE ARROW REVERSE CURVE (SYMBOL RIGHT ARROWS)
W01-4cL	48X48	16.00					TRIPLE ARROW REVERSE CURVE (SYMBOL LEFT ARROWS)
W01-4cR	48X48	16.00					TRIPLE ARROW REVERSE CURVE (SYMBOL RIGHT ARROWS)
W01-6	60X30	12.50					HORIZONTAL ARROW (SYMBOL)
W01-6a	72X36	18.00					HORIZONTAL ARROW (SYMBOL ON PERMANENT BARRICADE)
W01-7	60X30	12.50					DOUBLE HEAD HORIZONTAL ARROW (SYMBOL)
W01-7a	72X36	18.00					DOUBLE HEAD HORIZONTAL ARROW (SYMBOL ON PERMANENT BARRICADE)
W01-8	18X24	3.00					CHEVRON (SYMBOL)
W01-8a	30X36	7.50					CHEVRON (SYMBOL FOR DIVIDED HIGHWAYS)
W03-1	48X48	16.00					STOP AHEAD (SYMBOL)
W03-2	48X48	16.00					YIELD AHEAD (SYMBOL)
W03-3	48X48	16.00					SIGNAL AHEAD (SYMBOL)
W03-4	48X48	16.00					BE PREPARED TO STOP
W03-5	48X48	16.00	2	32.00			SPEED LIMIT AHEAD
W04-1L	48X48	16.00					MERGE (SYMBOL FROM LEFT)
W04-1R	48X48	16.00					MERGE (SYMBOL FROM RIGHT)
W05-1	48X48	16.00					ROAD/BRIDGE/RAMP NARROWS
W05-3	48X48	16.00					ONE LANE BRIDGE
W05-5	48X48	16.00					NARROW LANES
W06-1	48X48	16.00					DIVIDED HIGHWAY (SYMBOL)
W06-2	48X48	16.00					DIVIDED HIGHWAY END (SYMBOL)
W06-3	48X48	16.00					TWO WAY TRAFFIC (SYMBOL)
W07-3a	30X24	5.00					NEXT XX MILES (PLAQUE)
W08-1	48X48	16.00					BUMP
W08-2	48X48	16.00					DIP
W08-3	48X48	16.00					PAVEMENT ENDS
W08-4	48X48	16.00					SOFT SHOULDER
W08-5	48X48	16.00					SLIPPERY WHEN WET (SYMBOL)
W08-6	48X48	16.00					TRUCK CROSSING WITH FLAGS
W08-6c	48X48	16.00					TRUCK ENTRANCE
W08-7	36X36	9.00					LOOSE GRAVEL
W08-9	48X48	16.00					LOW SHOULDER
W08-11	48X48	16.00					UNEVEN LANES
W08-12	48X48	16.00					NO CENTER LINE
W10-1	42 RND.	9.62					RAILROAD CROSSING
W012-1	24X24	4.00					DOUBLE DOWN ARROW (SYMBOL)
W012-2	48X48	16.00					LOW CLEARANCE (SYMBOL)
W012-2x	24X18	3.00					LOW CLEARANCE (PLAQUE)
W012-2a	84X24	14.00					OVERHEAD LOW CLEARANCE (FEET AND INCHES)
W08-15	48X48	16.00					GROOVED PAVEMENT
W08-15p	30X24	5.00					MOTORCYCLE (PLAQUE)
W08-17	48X48	16.00					SHOULDER DROP-OFF (SYMBOL)
W08-17p	30X24	5.00					SHOULDER DROP-OFF (PLAQUE)
SPECIAL	120X60	50.00					LOW CLEARANCE XX FT XX IN XX MILES AHEAD
SPECIAL	120X60	50.00					WIDTH RESTRICTION XX FT XX IN XX MILES AHEAD
W013-1	30X30	6.25					ADVISORY SPEED (PLAQUE)
W016-2	30X24	5.00					XXX FEET (PLAQUE)
W016-3	30X24	5.00					X MILE (PLAQUE)
W020-1	48X48	16.00	2	32.00			ROAD/BRIDGE/RAMP WORK AHEAD
W020-2	48X48	16.00					DETOUR AHEAD
W020-3	48X48	16.00					ROAD CLOSED AHEAD
W020-4	48X48	16.00					ONE LANE ROAD AHEAD
W020-5	48X48	16.00	2	32.00			RIGHT/CENTER/LEFT LANE CLOSED AHEAD
W020-5a	48X48	16.00					2 RIGHT/CENTER/LEFT LANES CLOSED AHEAD
W020-6a	48X48	16.00	2	32.00			RIGHT/CENTER/LEFT LANE CLOSED
W020-7a	48X48	16.00					FLAGGER (SYMBOL) WITH FLAGS
W021-2	36X36	9.00					FRESH OIL
W021-5b	48X48	16.00	2	32.00			SHOULDER WORK AHEAD
W022-1	48X48	16.00					BLASTING ZONE AHEAD
W022-2	42X36	10.50					TURN OFF 2-WAY RADIO AND PHONE
W022-3	42X36	10.50					END BLASTING ZONE
W022-6e	21X15	2.19					WET PAINT (ARROW PIVOTS)
GUIDE SIGNS							
SPECIAL	36X36	9.00					FRESH OIL/LOOSE GRAVEL
E05-1	36X48	12.00					GORE EXIT
E05-2	48X36	12.00					EXIT OPEN
E05-2a	48X36	12.00					EXIT CLOSED
G020-1	60X24	10.00					ROAD WORK NEXT XX MILES
G020-2	48X24	8.00	2	16.00			END ROAD WORK
G020-4	36X18	4.50					PILOT CAR FOLLOW ME
SPECIAL	42X30	8.75					PLEASE WAIT FOR PILOT CAR
G020-5aP	36X24	6.00	2	12.00			WORK ZONE (PLAQUE)
M04-8a	24X18	3.00					END DETOUR
M04-9L	48X36	12.00					DETOUR (LEFT ARROW)
M04-9R	48X36	12.00					DETOUR (RIGHT ARROW)
M04-10L	48X18	6.00					DETOUR (ARROW LEFT)
M04-10R	48X18	6.00					DETOUR (ARROW RIGHT)
REGULATORY SIGNS							
R1-1	48X48	13.25					STOP
R1-2	48 TRI.	6.93					YIELD
R1-2a	36X36	9.00					TO ONCOMING TRAFFIC (PLAQUE)
R1-3	20X9	1.25					X-WAY (PLAQUE)
R2-1	36X48	12.00	2	24.00			SPEED LIMIT XX
R3-1	48X48	16.00					NO RIGHT TURN (SYMBOL)
R3-2	48X48	16.00					NO LEFT TURN (SYMBOL)
R3-3	36X36	9.00					NO TURNS
R3-4	48X48	16.00					NO U-TURN (SYMBOL)
R3-7L	30X30	6.25					LEFT LANE MUST TURN LEFT
R3-7R	30X30	6.25					RIGHT LANE MUST TURN RIGHT
R4-1	36X48	12.00					DO NOT PASS
R4-2	36X48	12.00					PASS WITH CARE
R4-7aL	36X48	12.00					KEEP LEFT (HORIZONTAL ARROW)
R4-7a	36X48	12.00					KEEP RIGHT (HORIZONTAL ARROW)
R5-1	30X30	6.25					DO NOT ENTER
R5-1a	36X24	6.00					WRONG WAY
R6-1L	48X18	6.00					ONE WAY ARROW (LEFT)
R6-1R	48X18	6.00					ONE WAY ARROW (RIGHT)
R6-2L	24X30	5.00					ONE WAY (LEFT)
R6-2R	24X30	5.00					ONE WAY (RIGHT)
R10-6	24X36	6.00					STOP HERE ON RED (45° ARROW)
R11-2	48X30	10.00					ROAD CLOSED
R11-3a	60X30	12.50					ROAD CLOSED XX MILES AHEAD LOCAL TRAFFIC ONLY
R11-4	60X30	12.50					ROAD CLOSED TO THRU TRAFFIC
S4-4	36X15	3.75					WHEN FLASHING
CONST-3A	60X48	20.00					FINE SIGN
CONST-3X	56X12	4.67					SPEEDING/PASSING (PLATE)
MISCELLANEOUS SIGNS							
SPECIAL	36X48	12.00					POINT OF PRESENCE
SPECIAL	96X48	32.00					POINT OF PRESENCE
CONST-7-48	48X24	8.00					RATE OUR WORK ZONE
CONST-7-72	72X36	18.00					RATE OUR WORK ZONE
616-10.05 CONSTRUCTION SIGNS TOTAL				212.0			
616-10.10 RELOCATED SIGNS TOTAL							

ITEM NUMBER	TOTAL QTY	DESCRIPTION
6122008		IMPACT ATTENUATOR (8 SAND BARRELS)
6122009		IMPACT ATTENUATOR (9 SAND BARRELS)
6122010		IMPACT ATTENUATOR (10 SAND BARRELS)
6122012		IMPACT ATTENUATOR (12 SAND BARRELS)
6122014	1	IMPACT ATTENUATOR (14 SAND BARRELS)
6122017		IMPACT ATTENUATOR (17 SAND BARRELS)
6122019		IMPACT ATTENUATOR (19 SAND BARRELS)
6122020	2	REPLACEMENT SAND BARREL
6122030		IMPACT ATTENUATOR ARRAY (RELOCATION)
6123000A		TRUCK OR TRAILER MOUNTED ATTENUATOR (TMA)
6161007		SPEED LIMIT AND STROBE LIGHT ASSEMBLY
6161008		ADVANCED WARNING RAIL SYSTEM
6161009		FLAG ASSEMBLY
6161020		CHANNELIZER (DRUM-LIKE)
6161022		CHANNELIZER (CONES)
6161024		CHANNELIZER (TRIM LINE) WITH LIGHT
6161025	45	CHANNELIZER (TRIM LINE)
6161026		CHANNELIZER (VERTICAL PANEL)
6161027		CHANNELIZER (VERTICAL PANEL) WITH LIGHT
6161028		CHANNELIZER
6161030		TYPE III MOVEABLE BARRICADE
6161031		TYPE III MOVEABLE BARRICADE WITH LIGHT
6161033		DIRECTION INDICATOR BARRICADE
6161034		DIRECTION INDICATOR BARRICADE, WITH LIGHT
6161040	1	FLASHING ARROW PANEL
6161047		TYPE III OBJECT MARKER
6161051		WARNING LIGHT, TYPE A
6161052		WARNING LIGHT, TYPE B
6161053		WARNING LIGHT, TYPE C
6161055		SEQUENTIAL FLASHING WARNING LIGHT
6161070		TUBULAR MARKER
6161095		RADAR SPEED ADVISORY SYSTEM
6161096		CHANGEABLE MESSAGE SIGN, COMMISSION FURNISHED/RETAINED
6161098		CHANGEABLE MESSAGE SIGN, CONTRACTOR FURNISHED/RETAINED
6161100		CHANGEABLE MESSAGE SIGN, CONTRACTOR FURNISHED/COMMISSION RETAINED
6173600D	150	CONTRACTOR FURNISHED/RETAINED TEMPORARY TRAFFIC BARRIER
6173602B		CONTRACTOR FURNISHED/COMMISSION RETAINED TEMPORARY TRAFFIC BARRIER
6174000A		TEMPORARY TRAFFIC BARRIER HEIGHT TRANSITION
6175010A		RELOCATING TEMPORARY TRAFFIC BARRIER
6176000B		COMMISSION FURNISHED/RETAINED TEMPORARY TRAFFIC BARRIER
6177000B		COMMISSION FURNISHED/RETAINED TEMPORARY TRAFFIC BARRIER HEIGHT TRANSITION
9019400		TEMPORARY LIGHTING
9029400		TEMPORARY TRAFFIC SIGNALS
9029401		TEMPORARY TRAFFIC SIGNALS AND LIGHTING

SUMMARY OF QUANTITIES
SHEET 5 OF 5

STATE OF MISSOURI
CHARLES A. MILLER
NUMBER E-2002000606
REGISTERED PROFESSIONAL ENGINEER

THIS SHEET HAS BEEN SIGNED, SEALED, AND DATED ELECTRONICALLY.

DATE PREPARED
16-NOV-2012

ROUTE	STATE
I-70	MO
DISTRICT	SHEET NO.
SL	3

COUNTY
ST. CHARLES

JOB NO.
J6I2412

CONTRACT ID.

PROJECT NO.

BRIDGE NO.

DESCRIPTION	DATE

IF A SEAL IS PRESENT ON THIS SHEET IT HAS BEEN ELECTRONICALLY SEALED AND DATED.

MISSOURI HIGHWAYS AND TRANSPORTATION COMMISSION
105 WEST CAPITOL
JEFFERSON CITY, MO 65102
1-888-ASK-MODOT (1-888-275-6636)

HNTB
715 KIRK DRIVE
KANSAS CITY, MO 64105
(816) 472-1201

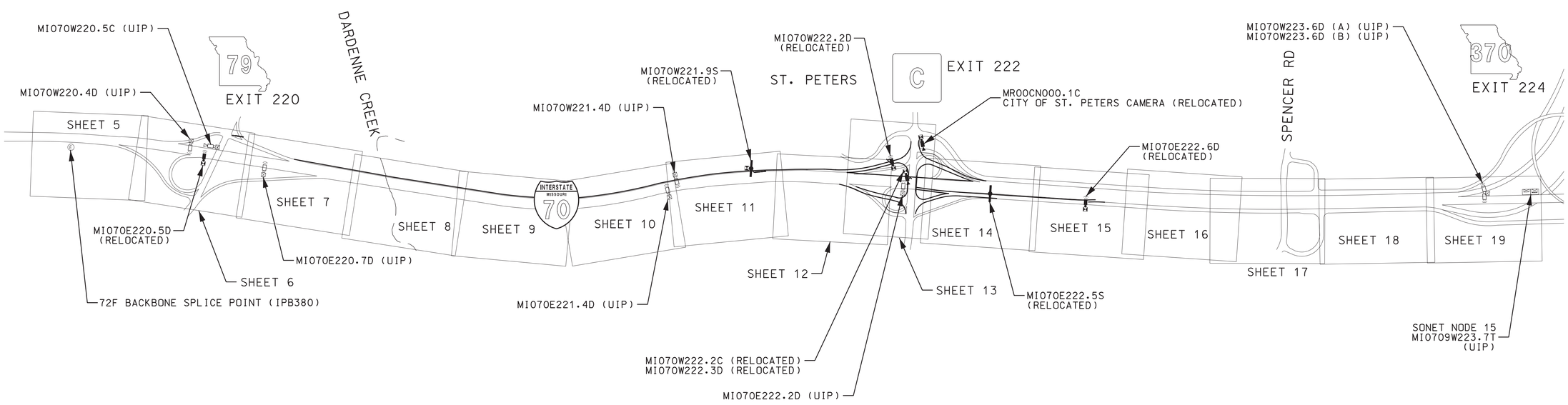

NOT TO SCALE

PLAN SHEET
INDEX

STATE OF MISSOURI
CHARLES A. MILLER
NUMBER E-2002000606
REGISTERED PROFESSIONAL ENGINEER

THIS SHEET HAS BEEN SIGNED, SEALED, AND DATED ELECTRONICALLY.

DATE PREPARED	16-NOV-2012
ROUTE	I-70
STATE	MO
DISTRICT	SL
SHEET NO.	4
COUNTY	ST. CHARLES
JOB NO.	J6I2412
CONTRACT ID.	
PROJECT NO.	
BRIDGE NO.	

DATE	DESCRIPTION

IF A SEAL IS PRESENT ON THIS SHEET IT HAS BEEN ELECTRONICALLY SEALED AND DATED.

MISSOURI HIGHWAYS AND TRANSPORTATION COMMISSION

MoDOT

105 WEST CAPITOL
JEFFERSON CITY, MO 65102
1-888-ASK-MODOT (1-888-275-6636)

HNTB

715 KIRK DRIVE
KANSAS CITY, MO 64105
(816) 472-1201

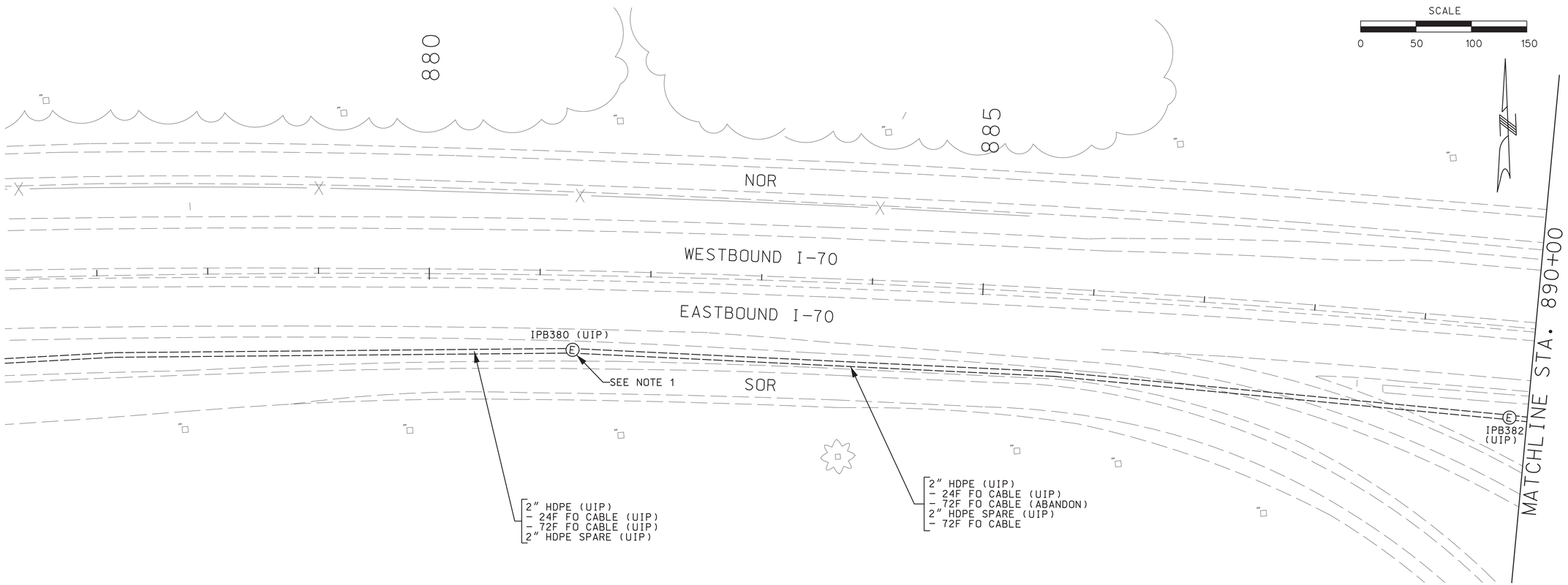

PLAN NOTES:

1. REUSE THE EXISTING UNDERGROUND SPLICE CLOSURE ASSEMBLY TO BUTT SPLICING NEW 72F FO CABLE TO EXISTING CABLE.

NON-STANDARD SYMBOLS

	EXISTING / PROPOSED
DYNAMIC MESSAGE SIGN	
DETECTOR, MICROWAVE	
CCTV CAMERA	
POLE-MOUNTED FIELD TERMINAL CABINET	
BASE-MOUNTED FIELD TERMINAL CABINET	
DETECTION ZONE	
CONDUIT, TRENCH	
CONDUIT, DIRECTIONAL DRILL	
CONDUIT, EXTERNAL ON STRUCTURE	
CONDUIT, ABANDON	
PULLBOX, CLASS 1 PREFORMED	
PULLBOX, CLASS 2 PREFORMED	
PULLBOX, ITS	
POLE	
UTILITY PAD-MOUNTED TRANSFORMER	
POWER SUPPLY ASSEMBLY	

ITS PLAN SHEET
SHEET 1 OF 15

STATE OF MISSOURI
CHARLES A. MILLER
NUMBER E-2002000606
REGISTERED PROFESSIONAL ENGINEER

THIS SHEET HAS BEEN SIGNED, SEALED, AND DATED ELECTRONICALLY.

DATE PREPARED	16-NOV-2012
ROUTE	I-70
STATE	MO
DISTRICT	SL
SHEET NO.	5
COUNTY	ST. CHARLES
JOB NO.	J6I2412
CONTRACT ID.	
PROJECT NO.	
BRIDGE NO.	

DATE	DESCRIPTION

MISSOURI HIGHWAYS AND TRANSPORTATION COMMISSION
105 WEST CAPITOL
JEFFERSON CITY, MO 65102
1-888-ASK-MODOT (1-888-275-6636)

HNTB
715 KIRK DRIVE
KANSAS CITY, MO 64105
(816) 472-1201

IF A SEAL IS PRESENT ON THIS SHEET IT HAS BEEN ELECTRONICALLY SEALED AND DATED.

REV.

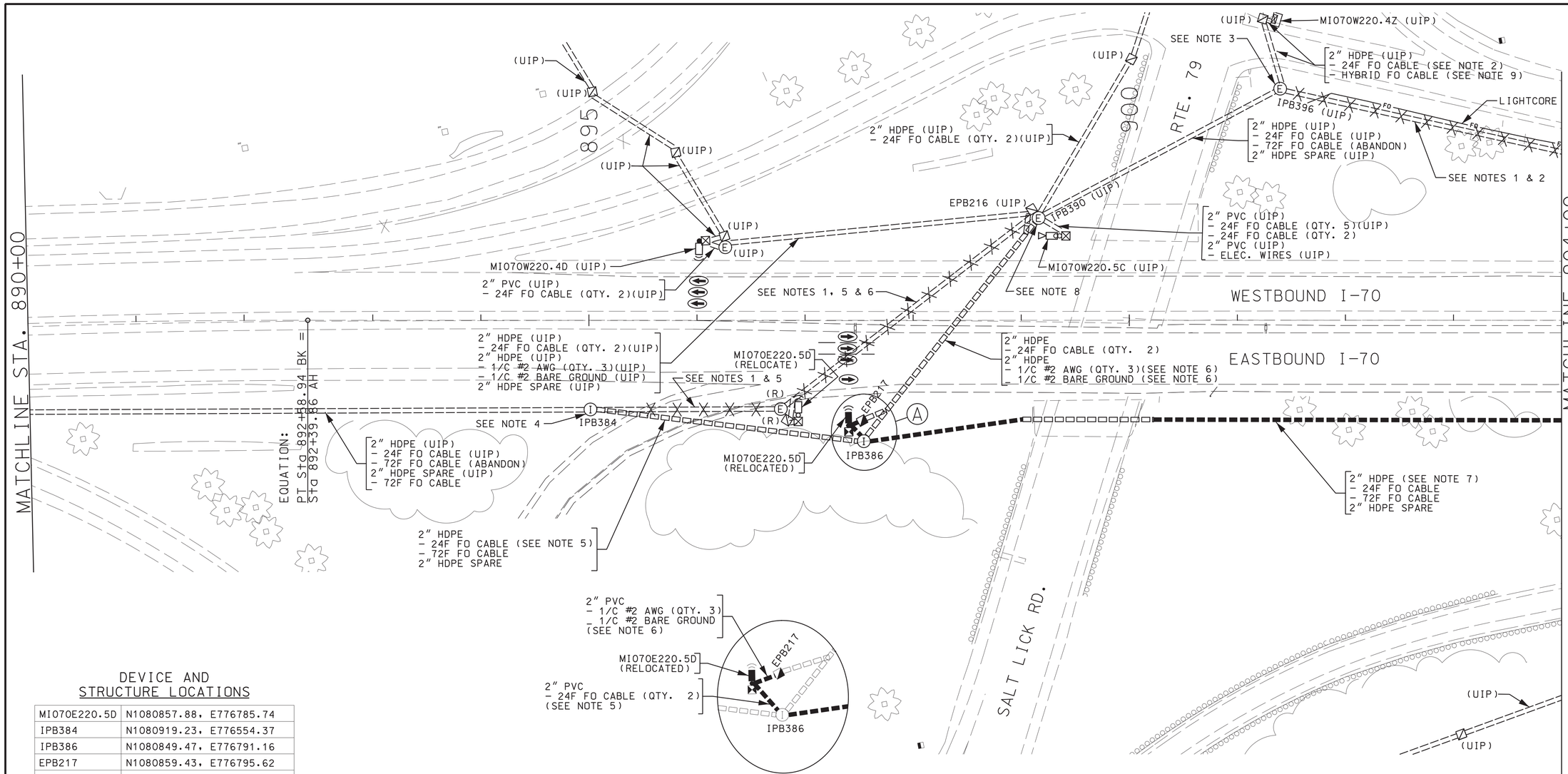

DETAIL A
NO SCALE

DEVICE AND STRUCTURE LOCATIONS

MI070E220.5D	N1080857.88, E776785.74
IPB384	N1080919.23, E776554.37
IPB386	N1080849.47, E776791.16
EPB217	N1080859.43, E776795.62

PLAN NOTES:

1. REMOVE EXISTING FIBER OPTIC OR ELECTRICAL CABLE(S) AND ABANDON CONDUIT IN PLACE.
2. SALVAGE 140' OF EXISTING 24F FIBER OPTIC CABLE FROM EAST OF PULL BOX IPB396 AND ROUTE TO CONTROLLER CABINET MI070W220.4Z FOR TERMINATION.
3. SALVAGE EXISTING UNDERGROUND SPLICE CLOSURE ASSEMBLY. STORE EXCESS FIBER OPTIC CABLE RUNNING TO MI070W220.4Z IN THIS PULL BOX.
4. INTERCEPT EXISTING CONDUIT WITH PULL BOX. DO NOT DAMAGE EXISTING FIBER OPTIC CABLES.
5. CUT EXISTING 24F FO CABLE AT PULL BOX IPB390. PULL FO CABLE BACK TO PULL BOX IPB384, THEN PULL TO RELOCATED MI070E220.5D CABINET.
6. DISCONNECT CONDUCTORS AND BARE GROUND AT EXISTING MI070E220.5D CABINET AND PULL BACK TO EPB216, THEN PULL TO RELOCATED MI070E220.5D CABINET THROUGH EPB217.
7. INSTALL CONDUITS AT LEAST 25' FROM THE EXISTING EDGE OF SHOULDER TO ACCOMMODATE FUTURE WIDENING.
8. DRILL EXISTING PULL BOX FOR NEW CONDUIT.
9. REMOVE HYBRID FIBER OPTIC CABLE RUNNING TO IPB396. DO NOT REMOVE OTHER HYBRID FIBER OPTIC CABLE.

NON-STANDARD SYMBOLS

	EXISTING	PROPOSED
DYNAMIC MESSAGE SIGN		
DETECTOR, MICROWAVE		
CCTV CAMERA		
POLE-MOUNTED FIELD TERMINAL CABINET		
BASE-MOUNTED FIELD TERMINAL CABINET		
DETECTION ZONE		
CONDUIT, TRENCH		
CONDUIT, DIRECTIONAL DRILL		
CONDUIT, EXTERNAL ON STRUCTURE		B
CONDUIT, ABANDON		
PULLBOX, CLASS 1 PREFORMED		
PULLBOX, CLASS 2 PREFORMED		
PULLBOX, ITS	E	I
POLE		
UTILITY PAD-MOUNTED TRANSFORMER	T	T
POWER SUPPLY ASSEMBLY		

SCALE
0 50 100 150

ITS PLAN SHEET
SHEET 2 OF 15

STATE OF MISSOURI
CHARLES A. MILLER
NUMBER E-2002000606
REGISTERED PROFESSIONAL ENGINEER

THIS SHEET HAS BEEN SIGNED, SEALED, AND DATED ELECTRONICALLY.

DATE PREPARED	16-NOV-2012
ROUTE	I-70
STATE	MO
DISTRICT	SL
SHEET NO.	6
COUNTY	ST. CHARLES
JOB NO.	J6I2412
CONTRACT ID.	
PROJECT NO.	
BRIDGE NO.	

DATE	DESCRIPTION

IF A SEAL IS PRESENT ON THIS SHEET IT HAS BEEN ELECTRONICALLY SEALED AND DATED.

MISSOURI HIGHWAYS AND TRANSPORTATION COMMISSION
105 WEST CAPITOL
JEFFERSON CITY, MO 65102
1-888-ASK-MODOT (1-888-275-6636)

HNTB
715 KIRK DRIVE
KANSAS CITY, MO 64105
(816) 472-1201

REV.

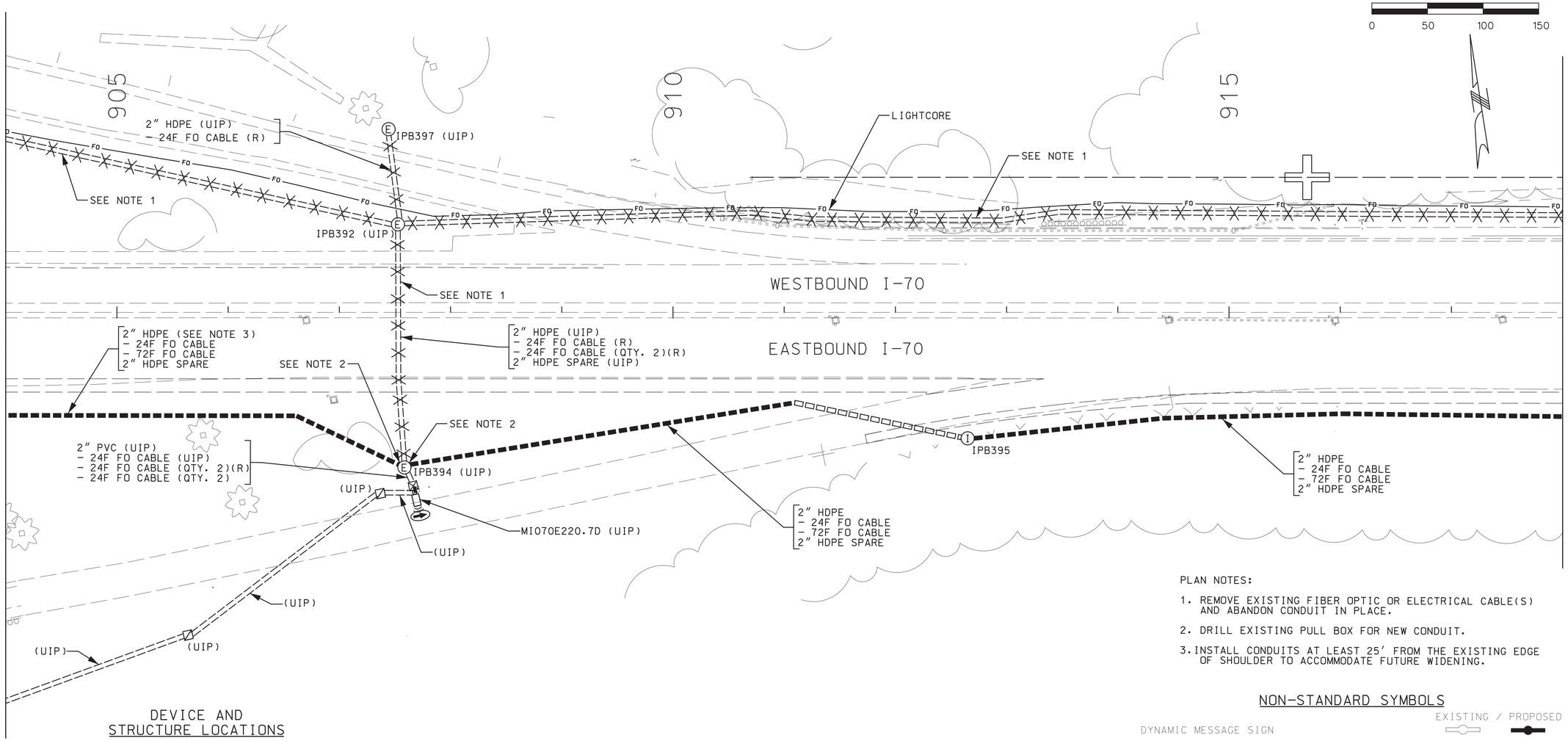

DEVICE AND STRUCTURE LOCATIONS

IPB395	N1080544.00, E778277.82

PLAN NOTES:

1. REMOVE EXISTING FIBER OPTIC OR ELECTRICAL CABLE(S) AND ABANDON CONDUIT IN PLACE.
2. DRILL EXISTING PULL BOX FOR NEW CONDUIT.
3. INSTALL CONDUITS AT LEAST 25' FROM THE EXISTING EDGE OF SHOULDER TO ACCOMMODATE FUTURE WIDENING.

NON-STANDARD SYMBOLS

	EXISTING / PROPOSED
DYNAMIC MESSAGE SIGN	
DETECTOR, MICROWAVE	
CCTV CAMERA	
POLE-MOUNTED FIELD TERMINAL CABINET	
BASE-MOUNTED FIELD TERMINAL CABINET	
DETECTION ZONE	
CONDUIT, TRENCH	
CONDUIT, DIRECTIONAL DRILL	
CONDUIT, EXTERNAL ON STRUCTURE	
CONDUIT, ABANDON	
PULLBOX, CLASS 1 PREFORMED	
PULLBOX, CLASS 2 PREFORMED	
PULLBOX, ITS	
POLE	
UTILITY PAD-MOUNTED TRANSFORMER	
POWER SUPPLY ASSEMBLY	

ITS PLAN SHEET
SHEET 3 OF 15

STATE OF MISSOURI
CHARLES A. MILLER
NUMBER E-2002000606
REGISTERED PROFESSIONAL ENGINEER

THIS SHEET HAS BEEN SIGNED, SEALED, AND DATED ELECTRONICALLY.

DATE PREPARED	16-NOV-2012
ROUTE	I-70
STATE	MO
DISTRICT	SL
SHEET NO.	7
COUNTY	ST. CHARLES
JOB NO.	J6I2412
CONTRACT ID.	
PROJECT NO.	
BRIDGE NO.	

DATE	DESCRIPTION

IF A SEAL IS PRESENT ON THIS SHEET IT HAS BEEN ELECTRONICALLY SEALED AND DATED.

MISSOURI HIGHWAYS AND TRANSPORTATION COMMISSION
105 WEST CAPITOL
JEFFERSON CITY, MO 65102
1-888-ASK-MODOT (1-888-275-6636)

HNTB
715 KIRK DRIVE
KANSAS CITY, MO 64105
(816) 472-1201

REV.

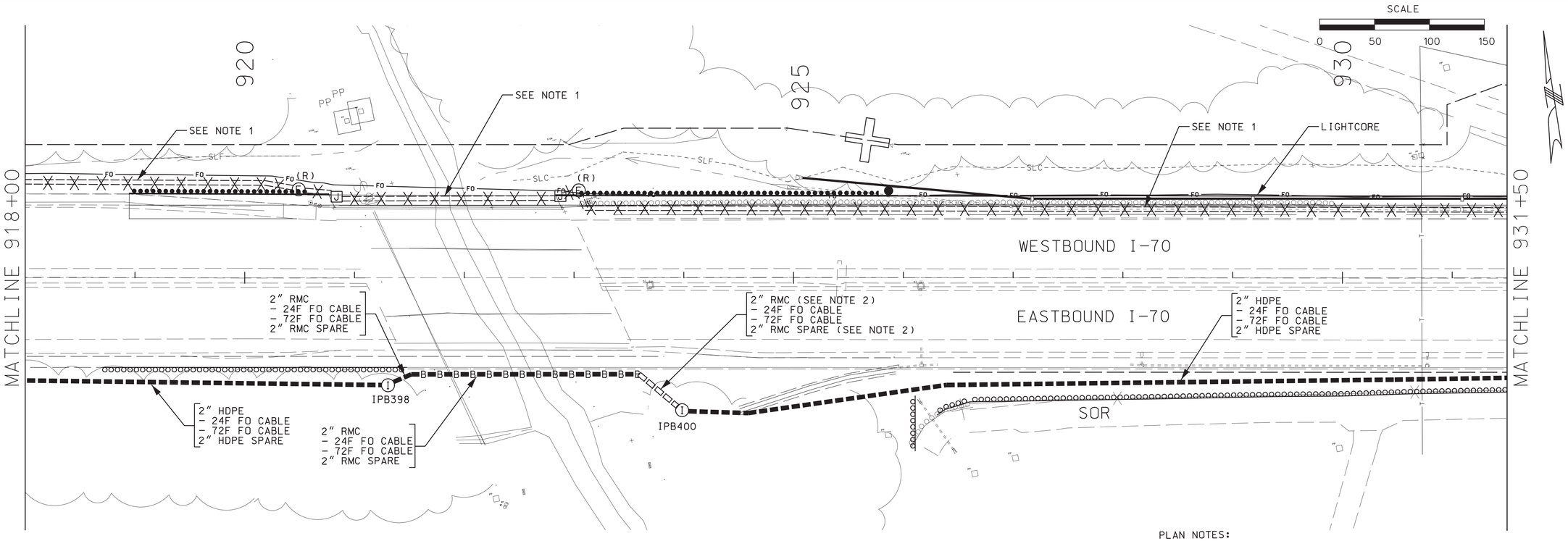

PLAN NOTES:

1. REMOVE EXISTING FIBER OPTIC OR ELECTRICAL CABLE(S) AND ABANDON CONDUIT IN PLACE.
2. EXISTING RIP RAP.

DEVICE AND STRUCTURE LOCATIONS

IPB398	N1080389.55, E779129.61
IPB400	N1080314.81, E779387.91

NON-STANDARD SYMBOLS

EXISTING / PROPOSED

- DYNAMIC MESSAGE SIGN
- DETECTOR, MICROWAVE
- CCTV CAMERA
- POLE-MOUNTED FIELD TERMINAL CABINET
- BASE-MOUNTED FIELD TERMINAL CABINET
- DETECTION ZONE
- CONDUIT, TRENCH
- CONDUIT, DIRECTIONAL DRILL
- CONDUIT, EXTERNAL ON STRUCTURE
- CONDUIT, ABANDON
- PULLBOX, CLASS 1 PREFORMED
- PULLBOX, CLASS 2 PREFORMED
- PULLBOX, ITS
- POLE
- UTILITY PAD-MOUNTED TRANSFORMER
- POWER SUPPLY ASSEMBLY

ITS PLAN SHEET
SHEET 4 OF 15

STATE OF MISSOURI
CHARLES A. MILLER
NUMBER E-2002000606
REGISTERED PROFESSIONAL ENGINEER

THIS SHEET HAS BEEN SIGNED, SEALED, AND DATED ELECTRONICALLY.

DATE PREPARED	
16-NOV-2012	
ROUTE	STATE
I-70	MO
DISTRICT	SHEET NO.
SL	8
COUNTY	
ST. CHARLES	
JOB NO.	
J6I2412	
CONTRACT ID.	
PROJECT NO.	
BRIDGE NO.	

DATE	DESCRIPTION

MISSOURI HIGHWAYS AND TRANSPORTATION COMMISSION
105 WEST CAPITOL
JEFFERSON CITY, MO 65102
1-888-ASK-MODOT (1-888-275-6636)

HNTB
715 KIRK DRIVE
KANSAS CITY, MO 64105
(816) 472-1201

IF A SEAL IS PRESENT ON THIS SHEET IT HAS BEEN ELECTRONICALLY SEALED AND DATED.

REV.

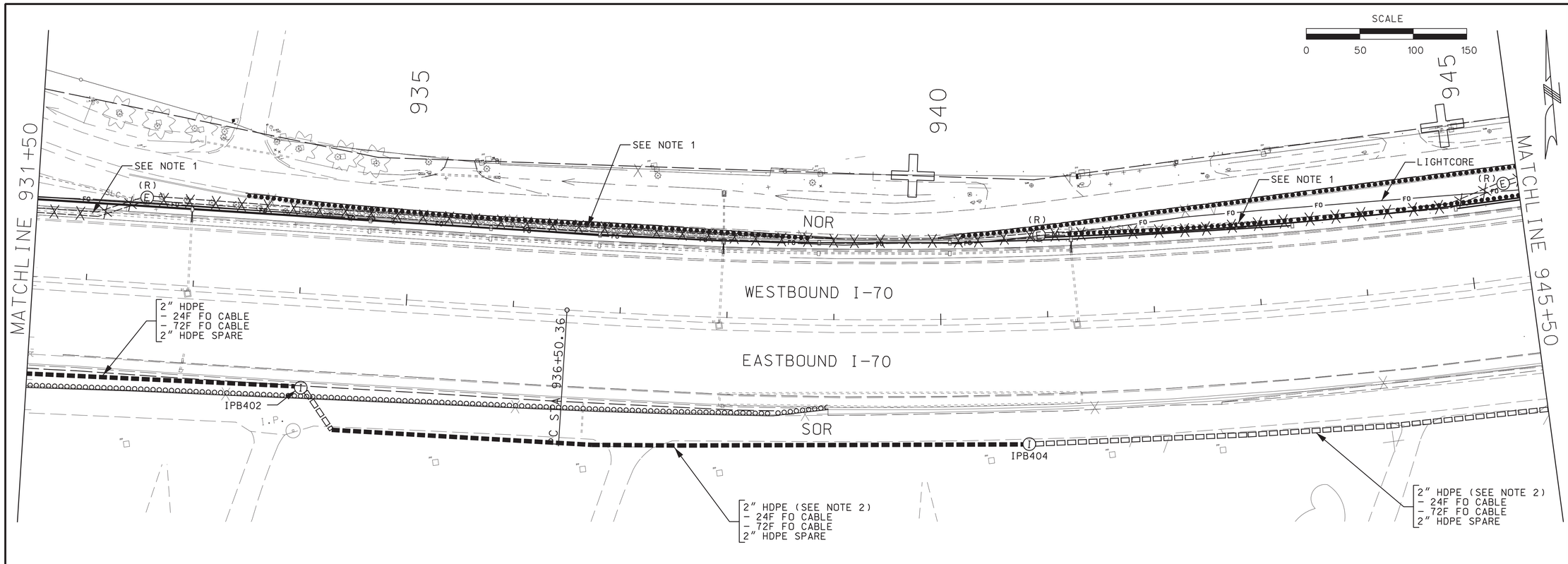

DEVICE AND STRUCTURE LOCATIONS

IPB402	N1080149.44, E780382.81
IPB404	N1080006.31, E781050.91

PLAN NOTES:

1. REMOVE EXISTING FIBER OPTIC OR ELECTRICAL CABLE(S) AND ABANDON CONDUIT IN PLACE.
2. CONDUIT SHALL BE INSTALLED AT A MINIMUM DEPTH OF 36" WHEN LOCATED SOUTH OF THE SOUTH OUTER ROAD.

NON-STANDARD SYMBOLS

	EXISTING	PROPOSED
DYNAMIC MESSAGE SIGN		
DETECTOR, MICROWAVE		
CCTV CAMERA		
POLE-MOUNTED FIELD TERMINAL CABINET		
BASE-MOUNTED FIELD TERMINAL CABINET		
DETECTION ZONE		
CONDUIT, TRENCH		
CONDUIT, DIRECTIONAL DRILL		
CONDUIT, EXTERNAL ON STRUCTURE		B
CONDUIT, ABANDON		X
PULLBOX, CLASS 1 PREFORMED		
PULLBOX, CLASS 2 PREFORMED		
PULLBOX, ITS	E	I
POLE		
UTILITY PAD-MOUNTED TRANSFORMER	T	T
POWER SUPPLY ASSEMBLY		

ITS PLAN SHEET
SHEET 5 OF 15

STATE OF MISSOURI
CHARLES A. MILLER
NUMBER E-2002000606
REGISTERED PROFESSIONAL ENGINEER

THIS SHEET HAS BEEN SIGNED, SEALED, AND DATED ELECTRONICALLY.

DATE PREPARED	
16-NOV-2012	
ROUTE	STATE
I-70	MO
DISTRICT	SHEET NO.
SL	9
COUNTY	
ST. CHARLES	
JOB NO.	
J6I2412	
CONTRACT ID.	
PROJECT NO.	
BRIDGE NO.	

DATE	DESCRIPTION	REV.

IF A SEAL IS PRESENT ON THIS SHEET IT HAS BEEN ELECTRONICALLY SEALED AND DATED.

MISSOURI HIGHWAYS AND TRANSPORTATION COMMISSION
105 WEST CAPITOL
JEFFERSON CITY, MO 65102
1-888-ASK-MODOT (1-888-275-6636)

HNTB
715 KIRK DRIVE
KANSAS CITY, MO 64105
(816) 472-1201

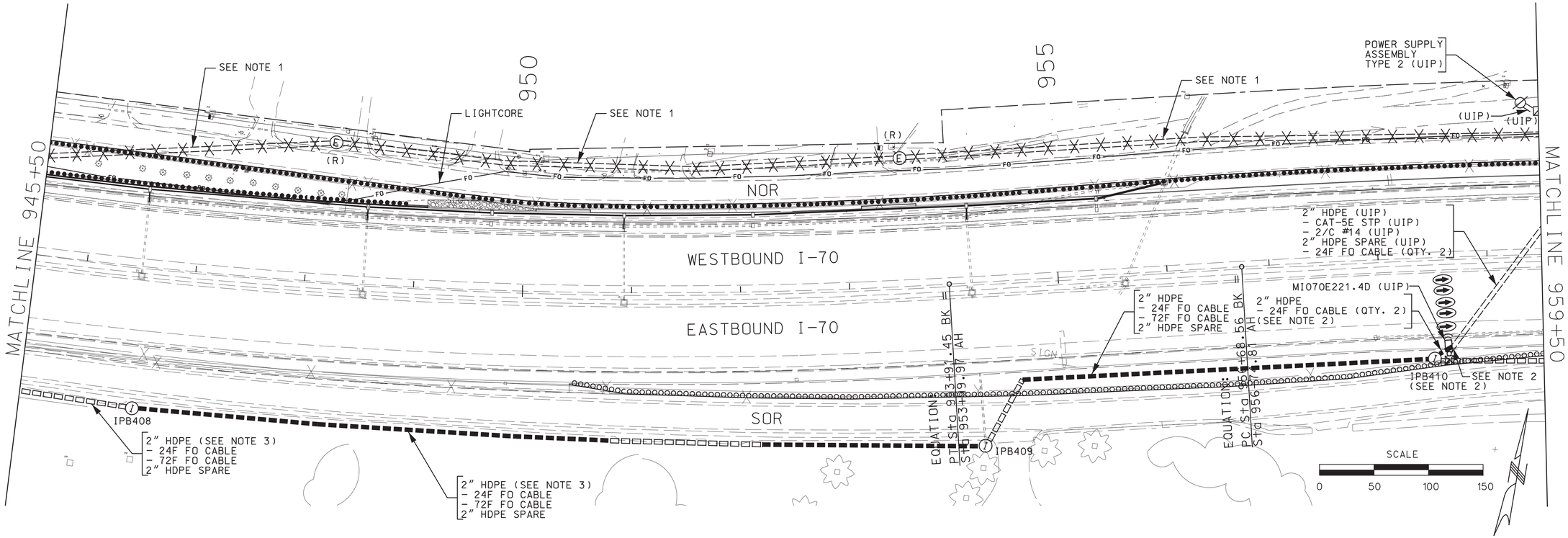

DEVICE AND STRUCTURE LOCATIONS

IPB408	N1079970.59, E781640.25
IPB409	N1080033.33, E782421.19
IPB410	N1080163.55, E782820.14

PLAN NOTES:

1. REMOVE EXISTING FIBER OPTIC OR ELECTRICAL CABLE(S) AND ABANDON CONDUIT IN PLACE.
2. INTERCEPT EXISTING SPARE CONDUIT AND EXTEND TO NEW ITS PULL BOX. USE MECHANICAL CONDUIT COUPLER APPROVED BY THE ENGINEER.
3. CONDUIT SHALL BE INSTALLED AT A MINIMUM DEPTH OF 36" WHEN LOCATED SOUTH OF THE SOUTH OUTER ROAD.

NON-STANDARD SYMBOLS

	EXISTING	PROPOSED
DYNAMIC MESSAGE SIGN		
DETECTOR, MICROWAVE		
CCTV CAMERA		
POLE-MOUNTED FIELD TERMINAL CABINET		
BASE-MOUNTED FIELD TERMINAL CABINET		
DETECTION ZONE		
CONDUIT, TRENCH		
CONDUIT, DIRECTIONAL DRILL		
CONDUIT, EXTERNAL ON STRUCTURE		B
CONDUIT, ABANDON		X
PULLBOX, CLASS 1 PREFORMED		
PULLBOX, CLASS 2 PREFORMED		
PULLBOX, ITS	E	I
POLE		
UTILITY PAD-MOUNTED TRANSFORMER	T	T
POWER SUPPLY ASSEMBLY		

ITS PLAN SHEET
SHEET 6 OF 15

STATE OF MISSOURI
CHARLES A. MILLER
NUMBER E-2002000606
REGISTERED PROFESSIONAL ENGINEER

THIS SHEET HAS BEEN SIGNED, SEALED, AND DATED ELECTRONICALLY.

DATE PREPARED	
16-NOV-2012	
ROUTE: I-70	STATE: MO
DISTRICT: SL	SHEET NO.: 10
COUNTY: ST. CHARLES	
JOB NO.: J6I2412	
CONTRACT ID.	
PROJECT NO.	
BRIDGE NO.	

DATE	DESCRIPTION

MISSOURI HIGHWAYS AND TRANSPORTATION COMMISSION
105 WEST CAPITOL
JEFFERSON CITY, MO 65102
1-888-ASK-MODOT (1-888-275-6636)

HNTB
715 KIRK DRIVE
KANSAS CITY, MO 64105
(816) 472-1201

IF A SEAL IS PRESENT ON THIS SHEET IT HAS BEEN ELECTRONICALLY SEALED AND DATED.

REV.

\\kcow00\jobs4\50299\DS005\ITS\Drawings\CD\Plans\010_ITS06_J6I2412_i50.dgn 10:01 AM 16-NOV-2012

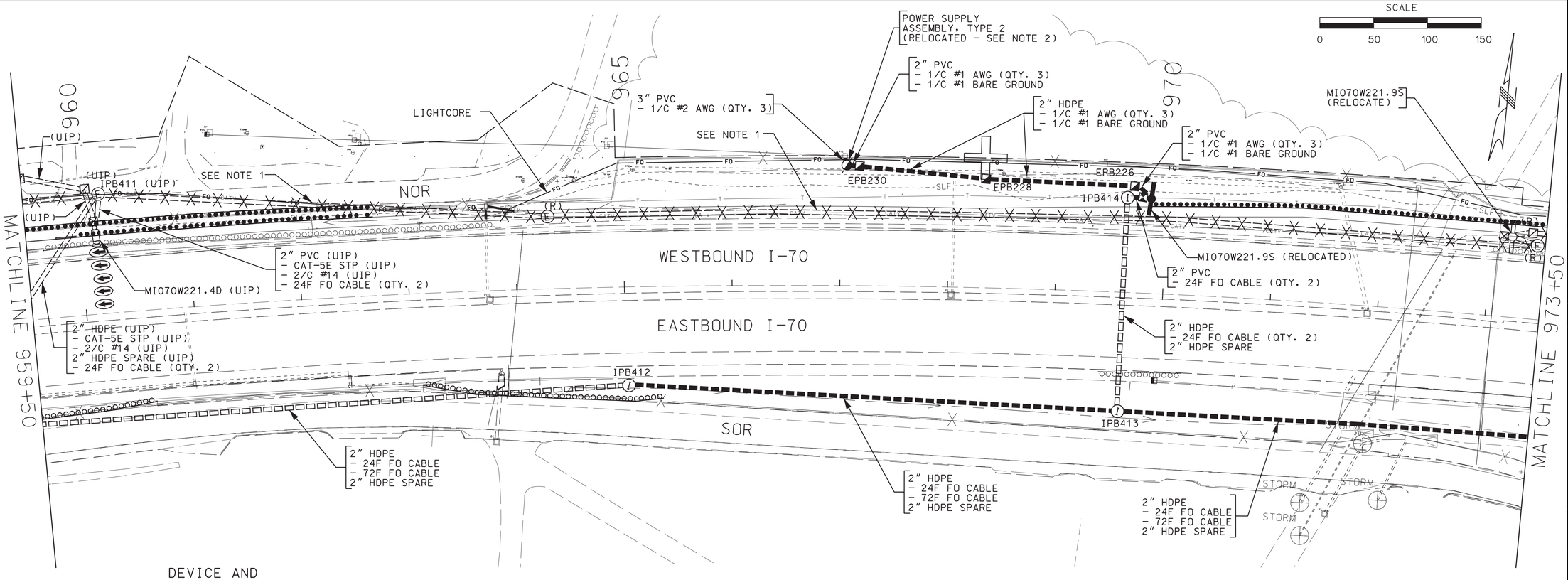

DEVICE AND STRUCTURE LOCATIONS

MI070W221.9S	N1080438.97, E783935.97
POWER SUPPLY	N1080455.67, E783651.98
IPB412	N1080240.40, E783461.25
IPB413	N1080241.57, E783915.40
IPB414	N1080439.49, E783925.98
EPB226	N1080445.03, E783928.01
EPB228	N1080450.25, E783781.73
EPB230	N1080455.72, E783661.98

PLAN NOTES:

1. REMOVE EXISTING FIBER OPTIC OR ELECTRICAL CABLE(S) AND ABANDON CONDUIT IN PLACE.
2. RELOCATED POWER SUPPLY ASSEMBLY FROM STA. 975+03 (SHEET 8 OF 15).

NON-STANDARD SYMBOLS

	EXISTING	PROPOSED
DYNAMIC MESSAGE SIGN		
DETECTOR, MICROWAVE		
CCTV CAMERA		
POLE-MOUNTED FIELD TERMINAL CABINET		
BASE-MOUNTED FIELD TERMINAL CABINET		
DETECTION ZONE		
CONDUIT, TRENCH		
CONDUIT, DIRECTIONAL DRILL		
CONDUIT, EXTERNAL ON STRUCTURE		
CONDUIT, ABANDON		
PULLBOX, CLASS 1 PREFORMED		
PULLBOX, CLASS 2 PREFORMED		
PULLBOX, ITS	E	I
POLE		
UTILITY PAD-MOUNTED TRANSFORMER	T	T
POWER SUPPLY ASSEMBLY		

ITS PLAN SHEET
SHEET 7 OF 15

STATE OF MISSOURI
CHARLES A. MILLER
NUMBER E-2002000606
REGISTERED PROFESSIONAL ENGINEER

THIS SHEET HAS BEEN SIGNED, SEALED, AND DATED ELECTRONICALLY.

DATE PREPARED	
16-NOV-2012	
ROUTE: I-70	STATE: MO
DISTRICT: SL	SHEET NO.: 11
COUNTY: ST. CHARLES	
JOB NO.: J6I2412	
CONTRACT ID.	
PROJECT NO.	
BRIDGE NO.	

DATE	DESCRIPTION

MISSOURI HIGHWAYS AND TRANSPORTATION COMMISSION
105 WEST CAPITOL
JEFFERSON CITY, MO 65102
1-888-ASK-MODOT (1-888-275-6636)

HNTB
715 KIRK DRIVE
KANSAS CITY, MO 64105
(816) 472-1201

IF A SEAL IS PRESENT ON THIS SHEET IT HAS BEEN ELECTRONICALLY SEALED AND DATED.

REV.

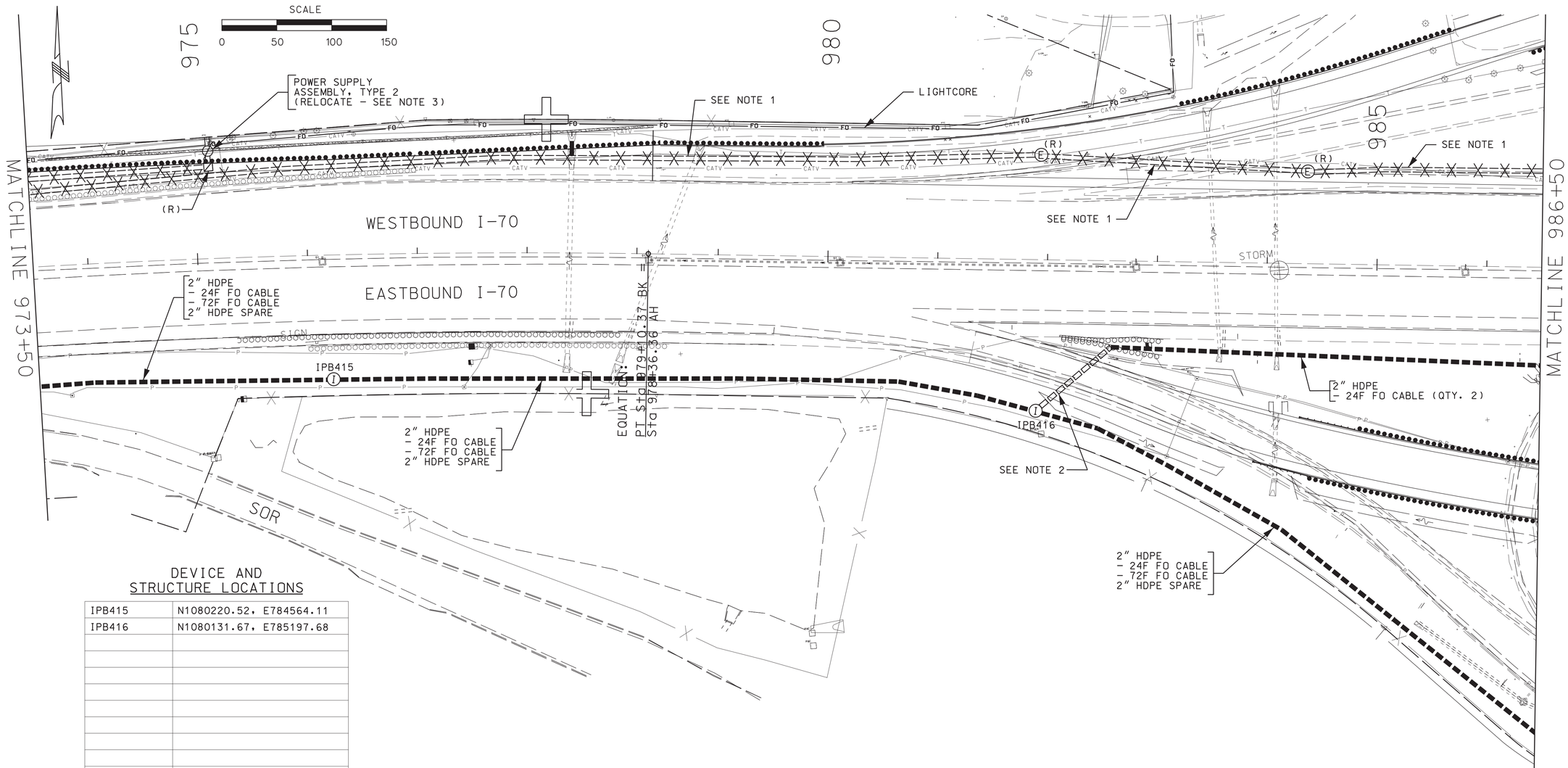

DEVICE AND STRUCTURE LOCATIONS

IPB415	N1080220.52, E784564.11
IPB416	N1080131.67, E785197.68

NON-STANDARD SYMBOLS

	EXISTING	PROPOSED
DYNAMIC MESSAGE SIGN		
DETECTOR, MICROWAVE		
CCTV CAMERA		
POLE-MOUNTED FIELD TERMINAL CABINET		
BASE-MOUNTED FIELD TERMINAL CABINET		
DETECTION ZONE		
CONDUIT, TRENCH		
CONDUIT, DIRECTIONAL DRILL		
CONDUIT, EXTERNAL ON STRUCTURE		B
CONDUIT, ABANDON		
PULLBOX, CLASS 1 PREFORMED		
PULLBOX, CLASS 2 PREFORMED		
PULLBOX, ITS	E	I
POLE		
UTILITY PAD-MOUNTED TRANSFORMER	T	T
POWER SUPPLY ASSEMBLY		

PLAN NOTES:

1. REMOVE EXISTING FIBER OPTIC OR ELECTRICAL CABLE(S) AND ABANDON CONDUIT IN PLACE.
2. CONDUIT PASSING UNDER THE RAMP AND 2' EITHER SIDE OF THE RAMP NEEDS TO BE DRILLED AT A DEPTH OF AT LEAST 4.5' TO AVOID PLANNED SUBGRADE MODFICATION FOR NEW RAMP.
3. RELOCATE POWER SUPPLY ASSEMBLY TO STA. 966+97 (SHEET 7 OF 15).

ITS PLAN SHEET
SHEET 8 OF 15

STATE OF MISSOURI
CHARLES A. MILLER
NUMBER E-2002000606
REGISTERED PROFESSIONAL ENGINEER

THIS SHEET HAS BEEN SIGNED, SEALED, AND DATED ELECTRONICALLY.

DATE PREPARED	
16-NOV-2012	
ROUTE I-70	STATE MO
DISTRICT SL	SHEET NO. 12
COUNTY ST. CHARLES	
JOB NO. J6I2412	
CONTRACT ID.	
PROJECT NO.	
BRIDGE NO.	

DATE	DESCRIPTION

IF A SEAL IS PRESENT ON THIS SHEET IT HAS BEEN ELECTRONICALLY SEALED AND DATED.

MISSOURI HIGHWAYS AND TRANSPORTATION COMMISSION
105 WEST CAPITOL
JEFFERSON CITY, MO 65102
1-888-ASK-MODOT (1-888-275-6636)

HNTB
715 KIRK DRIVE
KANSAS CITY, MO 64105
(816) 472-1201

REV.

\\kcow00\jobs4\50299\DS005\ITS\Drawings\CD\Plans\012_ITS08_J6I2412_i50.dgn 10:01 AM 16-NOV-2012

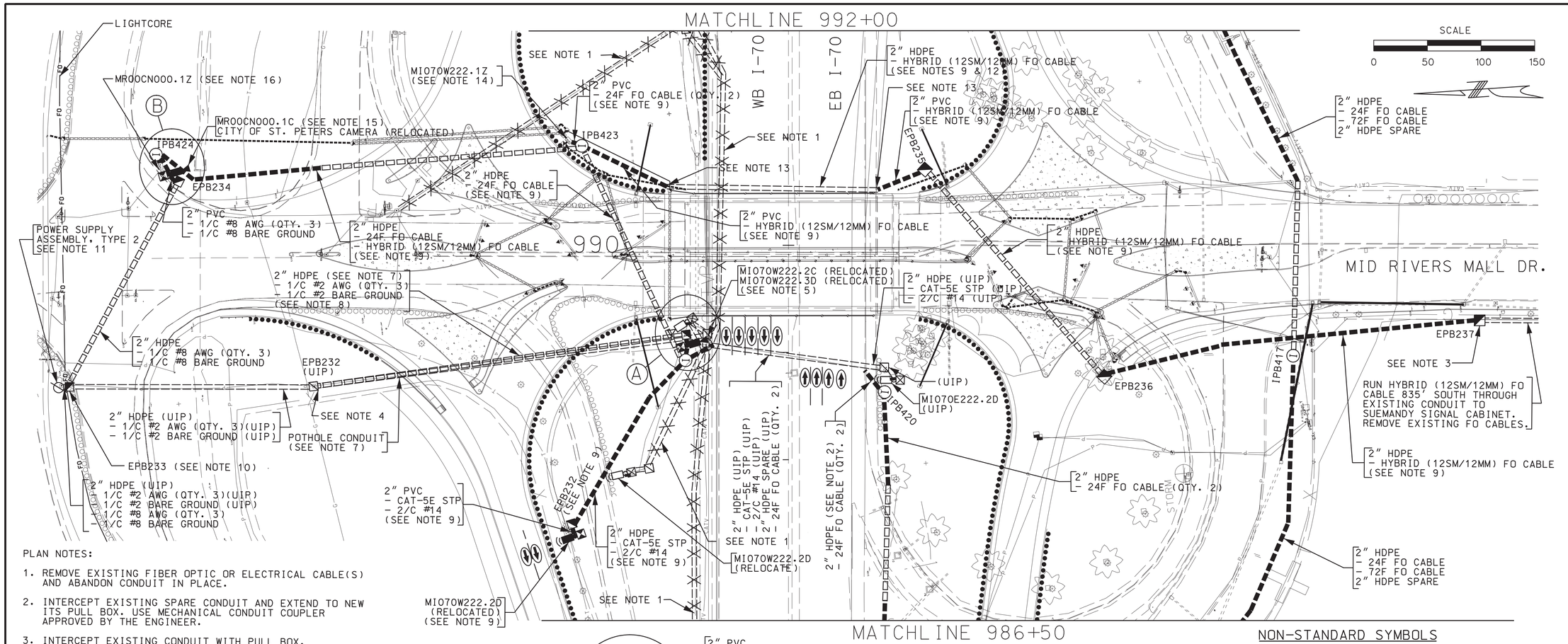

PLAN NOTES:

1. REMOVE EXISTING FIBER OPTIC OR ELECTRICAL CABLE(S) AND ABANDON CONDUIT IN PLACE.
2. INTERCEPT EXISTING SPARE CONDUIT AND EXTEND TO NEW ITS PULL BOX. USE MECHANICAL CONDUIT COUPLER APPROVED BY THE ENGINEER.
3. INTERCEPT EXISTING CONDUIT WITH PULL BOX.
4. DRILL EXISTING PULL BOX.
5. RELOCATE MI070W222.3D TO CAMERA MI070W222.2C. INSTALL RELOCATED DETECTOR ON RELOCATED CAMERA POLE.
6. INTERCEPT EXISTING CONDUIT, IF EXISTING CONDUIT CAN BE UIP (SEE NOTE 7).
7. POTHOLE EXISTING CONDUIT AT PROPOSED WALL LOCATION TO DETERMINE IF IT IS AT LEAST 4' BELOW EXISTING GRADE. IF CONDUIT IS EQUAL TO OR DEEPER THAN THIS DEPTH, THEN UNDERRUN THE CONDUIT BORE BETWEEN EPB230 AND EPB232, AND USE THE EXISTING CONDUIT IN PLACE.
8. PULL EXISTING CONDUCTORS AND BARE GROUND WIRE BACK TO EPB232 THEN RE-PULL THROUGH CONDUIT AND PULL BOX EPB230 TO RELOCATED MI070W222.2C CABINET.
9. CANNOT BE INSTALLED UNTIL THE ROADWAY AND BRIDGE CONSTRUCTION IS NEARLY COMPLETE IN THE AREA. COORDINATE WITH THE ROADWAY AND BRIDGE CONTRACTOR.
10. INTERCEPT EXISTING CONDUIT AND INSTALL NEW PULL BOX TO PROVIDE ACCESS TO THE EXISTING POWER SUPPLY ASSEMBLY.
11. ADD A NEW DOUBLE POLE 60 AMP BREAKER FOR NEW POWER FEED TO ARTERIAL CAMERA (MR00CN000.1C) CABINET.
12. INSTALL FIBER OPTIC CABLE IN CONDUIT INSTALLED BY OTHERS IN BRIDGE BARRIER RAIL.
13. CONNECT CONDUIT TO CONDUITS INSTALLED BY OTHERS THAT EXTEND FROM BRIDGE BARRIER RAIL USING ENGINEER APPROVED COUPLING.
14. TRAFFIC SIGNAL CONTROLLER INSTALLED BY OTHERS. COORDINATE WITH OTHER CONTRACTOR TO HAVE NEEDED CONDUIT PROVIDED IN TRAFFIC SIGNAL CABINET FOUNDATION.
15. INSTALL MODOT IP CCTV CAMERA AND RELOCATE CITY OF ST. PETERS CAMERA FROM EXISTING POLE AT THE WESTBOUND RAMP TERMINAL. INSTALL TYPE 7 CABINET ON CAMERA POLE.
16. CONSTRUCT TRAFFIC SIGNAL CABINET BASE WRAP TO PROVIDE CONDUIT PATH INTO CABINET.

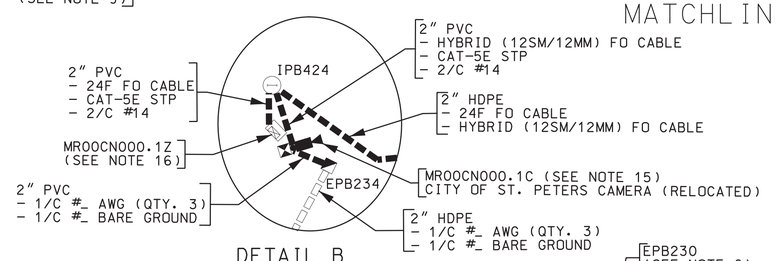

DETAIL B
NO SCALE

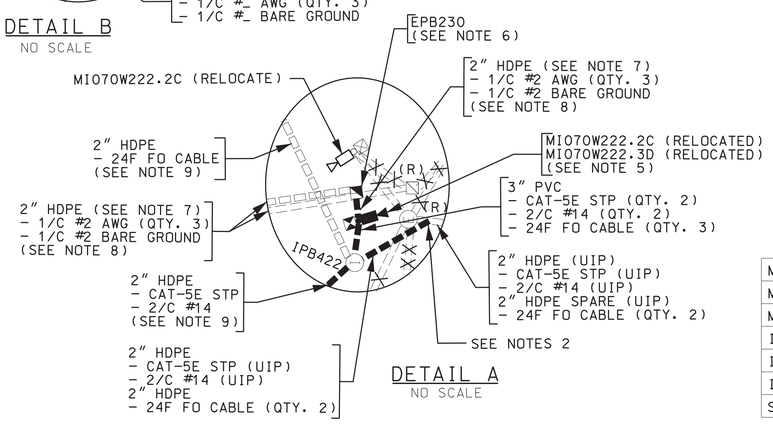

DETAIL A
NO SCALE

NON-STANDARD SYMBOLS

	EXISTING	PROPOSED
DYNAMIC MESSAGE SIGN		
DETECTOR, MICROWAVE		
CCTV CAMERA		
POLE-MOUNTED FIELD TERMINAL CABINET		
BASE-MOUNTED FIELD TERMINAL CABINET		
DETECTION ZONE		
CONDUIT, TRENCH		
CONDUIT, DIRECTIONAL DRILL		
CONDUIT, EXTERNAL ON STRUCTURE		B
CONDUIT, ABANDON		X
PULLBOX, CLASS 1 PREFORMED		
PULLBOX, CLASS 2 PREFORMED		
PULLBOX, ITS	E	I
POLE		
UTILITY PAD-MOUNTED TRANSFORMER	T	T
POWER SUPPLY ASSEMBLY		

DEVICE AND STRUCTURE LOCATIONS

MI070W222.2C	N1080284.25, E785934.10
MI070W222.2D	N1080407.37, E785768.80
MR00CN000.1C	N1080746.55, E786145.56
IPB417	N1079723.74, E785862.83
IPB420	N1080105.83, E785870.78
IPB422	N1080286.24, E785924.30
SEE SHT. 10 OF 15 FOR OTHER LOCATIONS	

ITS PLAN SHEET
SHEET 9 OF 15

STATE OF MISSOURI
CHARLES A. MILLER
NUMBER E-2002000606
REGISTERED PROFESSIONAL ENGINEER

THIS SHEET HAS BEEN SIGNED, SEALED, AND DATED ELECTRONICALLY.

DATE PREPARED	
16-NOV-2012	
ROUTE: I-70	STATE: MO
DISTRICT: SL	SHEET NO.: 13
COUNTY: ST. CHARLES	
JOB NO.: J6I2412	
CONTRACT ID.	
PROJECT NO.	
BRIDGE NO.	

DATE	DESCRIPTION

IF A SEAL IS PRESENT ON THIS SHEET IT HAS BEEN ELECTRONICALLY SEALED AND DATED.

MISSOURI HIGHWAYS AND TRANSPORTATION COMMISSION
105 WEST CAPITOL
JEFFERSON CITY, MO 65102
1-888-ASK-MODOT (1-888-275-6636)

HNTB
715 KIRK DRIVE
KANSAS CITY, MO 64105
(816) 472-1201

REV.

\\kcow00\jobs4\50299\DS005\ITS\Drawings\CD\Plans\013_ITS09_J6I2412_i50.dgn 10:01 AM 16-NOV-2012

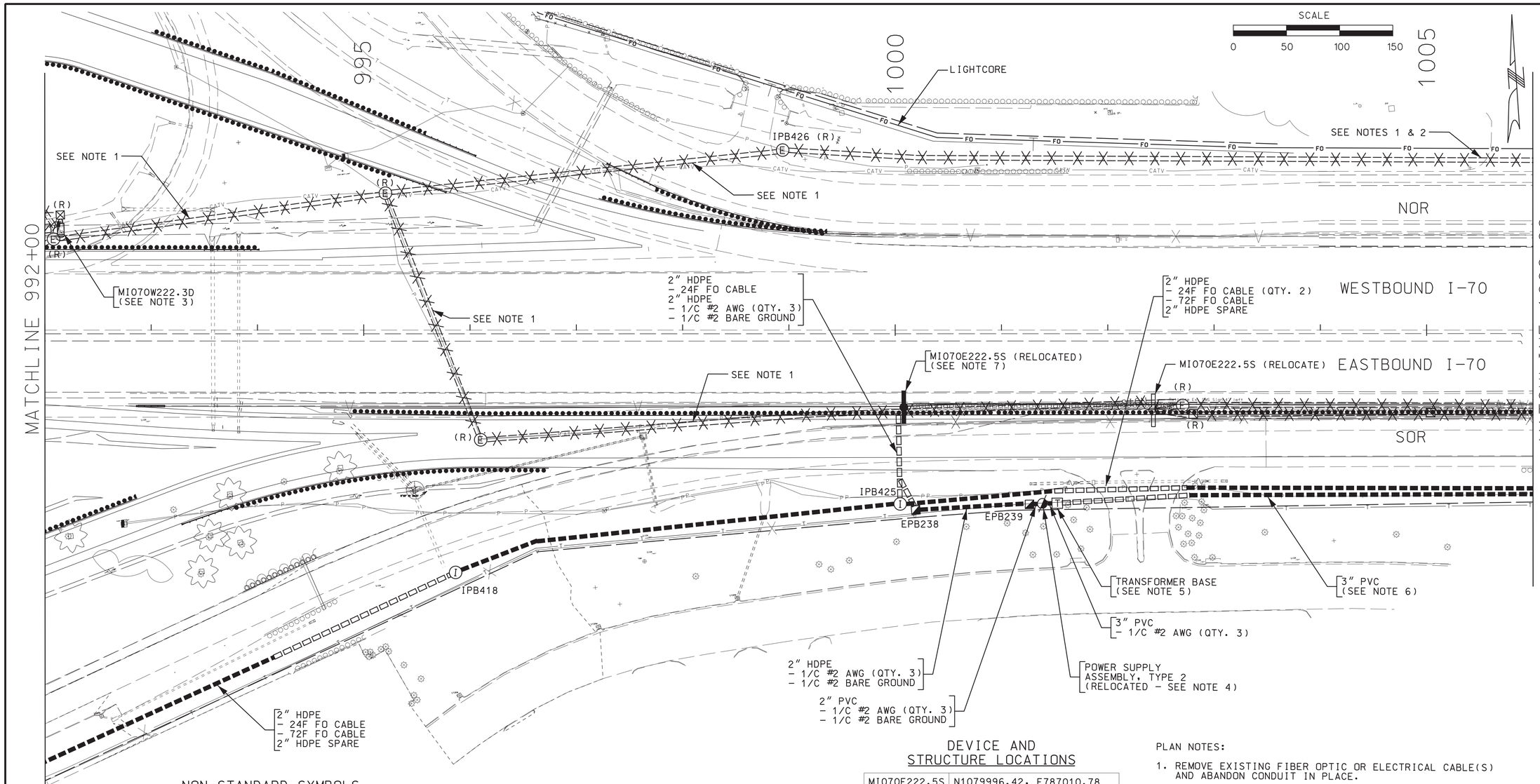

NON-STANDARD SYMBOLS

	EXISTING / PROPOSED
DYNAMIC MESSAGE SIGN	
DETECTOR, MICROWAVE	
CCTV CAMERA	
POLE-MOUNTED FIELD TERMINAL CABINET	
BASE-MOUNTED FIELD TERMINAL CABINET	
DETECTION ZONE	
CONDUIT, TRENCH	
CONDUIT, DIRECTIONAL DRILL	
CONDUIT, EXTERNAL ON STRUCTURE	
CONDUIT, ABANDON	
PULLBOX, CLASS 1 PREFORMED	
PULLBOX, CLASS 2 PREFORMED	
PULLBOX, ITS	
POLE	
UTILITY PAD-MOUNTED TRANSFORMER	
POWER SUPPLY ASSEMBLY	

DEVICE AND STRUCTURE LOCATIONS SHT. 9 OF 15

IPB423	N1080361.39, E786129.90
IPB424	N1080756.79, E786165.12
EPB230	N1080283.85, E785944.09
EPB232	N1080408.88, E785778.69
EPB234	N1080739.26, E786138.72
EPB235	N1080045.88, E786072.94
EPB236	N1079900.73, E785862.68

DEVICE AND STRUCTURE LOCATIONS

MI070E222.5S	N1079996.42, E787010.78
POWER SUPPLY	N1079893.39, E787130.64
XFMR. BASE	N1079892.64, E787140.61
IPB418	N1079889.28, E786574.67
IPB425	N1079907.65, E786997.51
EPB238	N1079900.33, E787011.43
EPB239	N1079893.84, E787120.65

PLAN NOTES:

1. REMOVE EXISTING FIBER OPTIC OR ELECTRICAL CABLE(S) AND ABANDON CONDUIT IN PLACE.
2. CUT EXISTING 24F FO CABLE AT PULL BOX IPB426 AND PULL FIBER BACK TO IPB435 (SHEET 11 OF 15). PULL FIBER ACROSS I-70 TO CABINET AT MI070E222.6D.
3. RELOCATE RADAR DETECTOR UNIT MI070W222.3D TO CAMERA MI070W222.2C POLE (SHEET 9 OF 15). INSTALL DETECTOR ON RELOCATED CAMERA POLE. SALVAGE THE DETECTOR POLE AND CABINET. REMOVE FOUNDATION TO 2' BELOW EXISTING GRADE AND BACK FILL HOLE.
4. RELOCATED POWER SUPPLY ASSEMBLY FROM STA. 1008+26 (SHEET 11 OF 15).
5. TRANSFORMER COMPOSITE PAD MEETING AMEREN REQUIREMENTS. GRADE AS NEEDED TO LEVEL TRANSFORMER PAD.
6. PROVIDE PULL ROPE TO ALLOW AMEREN TO INSTALL CONDUCTORS.
7. THE DRILLED SHAFT FOUNDATION AND RELOCATED DMS MUST BE PROTECTED BY TEMPORARY TRAFFIC BARRIER AND CRASH ALTERNATOR UNTIL TEMPORARY TRAFFIC BARRIER CLOSING THE OUTSIDE LANE IS INSTALLED BY ROADWAY PROJECT J6I2412.

ITS PLAN SHEET
SHEET 10 OF 15

STATE OF MISSOURI
CHARLES A. MILLER
NUMBER E-2002000606
REGISTERED PROFESSIONAL ENGINEER

THIS SHEET HAS BEEN SIGNED, SEALED, AND DATED ELECTRONICALLY.

DATE PREPARED	16-NOV-2012
ROUTE	I-70
STATE	MO
DISTRICT	SL
SHEET NO.	14
COUNTY	ST. CHARLES
JOB NO.	J6I2412
CONTRACT ID.	
PROJECT NO.	
BRIDGE NO.	

DATE	DESCRIPTION

MISSOURI HIGHWAYS AND TRANSPORTATION COMMISSION
105 WEST CAPITOL
JEFFERSON CITY, MO 65102
1-888-ASK-MODOT (1-888-275-6636)

HNTB
715 KIRK DRIVE
KANSAS CITY, MO 64105
(816) 472-1201

IF A SEAL IS PRESENT ON THIS SHEET IT HAS BEEN ELECTRONICALLY SEALED AND DATED.

REV.

\\kcow00\jobs4\50299\DS005\ITS\Drawings\CD\Plans\014_ITS10_J6I2412_i50.dgn 10:01 AM 16-NOV-2012

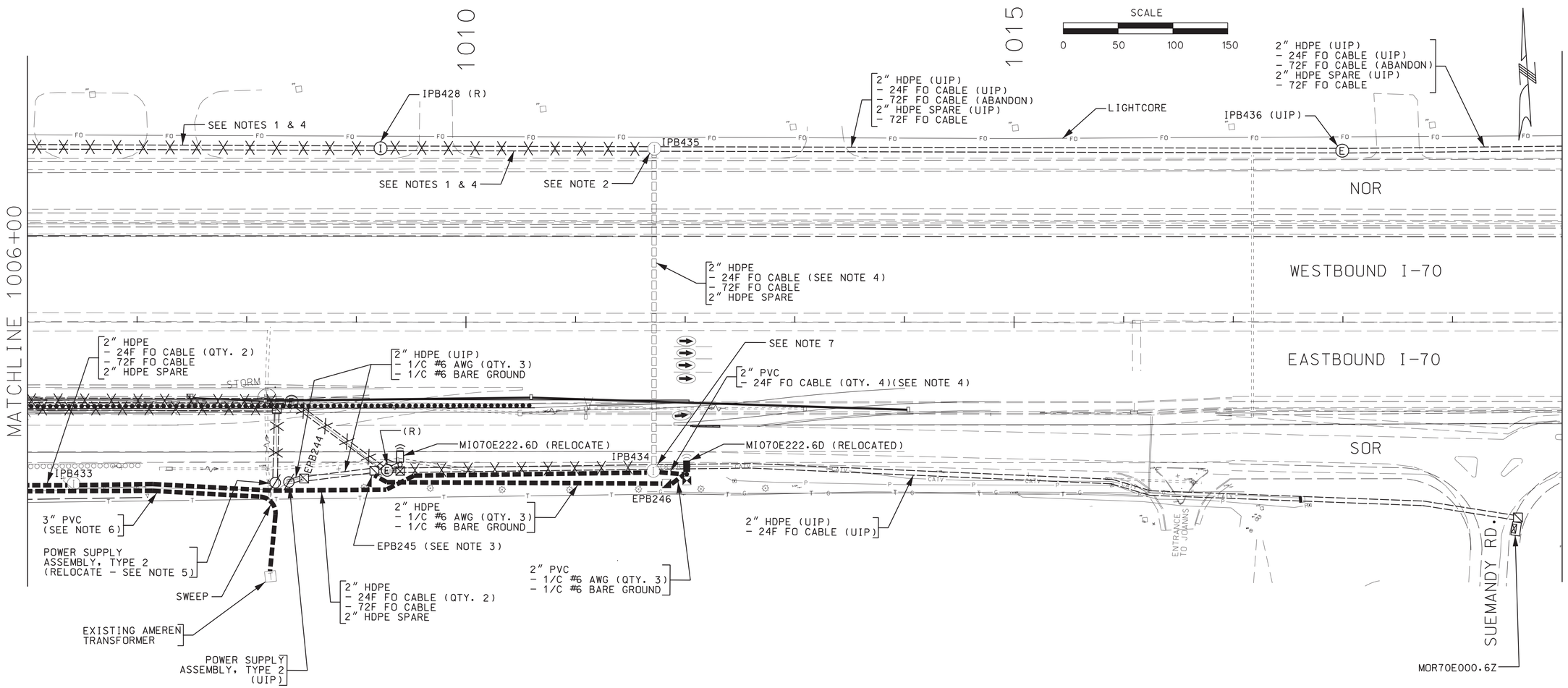

PLAN NOTES:

1. REMOVE EXISTING FIBER OPTIC OR ELECTRICAL CABLE(S) AND ABANDON CONDUIT IN PLACE.
2. INTERCEPT EXISTING CONDUIT WITH PULL BOX. DO NOT DAMAGE THE EXISTING FIBER OPTIC CABLES.
3. DRILL EXISTING PULL BOX.
4. CUT EXISTING 24F FO CABLE AT PULL BOX IPB426 (SHEET 10 OF 15 AND PULL FIBER BACK TO IPB435. PULL FIBER ACROSS I-70 TO CABINET AT MI070E222.6D.
5. RELOCATE POWER SUPPLY ASSEMBLY TO STA. 1001+37 (SHEET 10 OF 15).
6. PROVIDE PULL ROPE TO ALLOW AMEREN TO INSTALL CONDUCTORS.
7. INTERCEPT EXISTING CONDUIT WITH PULL BOX.

DEVICE AND STRUCTURE LOCATIONS

MI070E222.6D	N1079801.52, E788189.73
IPB433	N1079854.14, E787632.88
IPB434	N1079807.93, E788159.82
EPB246	N1079798.32, E788180.25

NON-STANDARD SYMBOLS

EXISTING / PROPOSED

- DYNAMIC MESSAGE SIGN
- DETECTOR, MICROWAVE
- CCTV CAMERA
- POLE-MOUNTED FIELD TERMINAL CABINET
- BASE-MOUNTED FIELD TERMINAL CABINET
- DETECTION ZONE
- CONDUIT, TRENCH
- CONDUIT, DIRECTIONAL DRILL
- CONDUIT, EXTERNAL ON STRUCTURE
- CONDUIT, ABANDON
- PULLBOX, CLASS 1 PREFORMED
- PULLBOX, CLASS 2 PREFORMED
- PULLBOX, ITS
- POLE
- UTILITY PAD-MOUNTED TRANSFORMER
- POWER SUPPLY ASSEMBLY

ITS PLAN SHEET
SHEET 11 OF 15

STATE OF MISSOURI
CHARLES A. MILLER
NUMBER E-2002000606
REGISTERED PROFESSIONAL ENGINEER

THIS SHEET HAS BEEN SIGNED, SEALED, AND DATED ELECTRONICALLY.

DATE PREPARED	16-NOV-2012
ROUTE	I-70
STATE	MO
DISTRICT	SL
SHEET NO.	15
COUNTY	ST. CHARLES
JOB NO.	J6I2412
CONTRACT ID.	
PROJECT NO.	
BRIDGE NO.	

DATE	DESCRIPTION

MISSOURI HIGHWAYS AND TRANSPORTATION COMMISSION
105 WEST CAPITOL
JEFFERSON CITY, MO 65102
1-888-ASK-MODOT (1-888-275-6636)

HNTB
715 KIRK DRIVE
KANSAS CITY, MO 64105
(816) 472-1201

IF A SEAL IS PRESENT ON THIS SHEET IT HAS BEEN ELECTRONICALLY SEALED AND DATED.

REV.

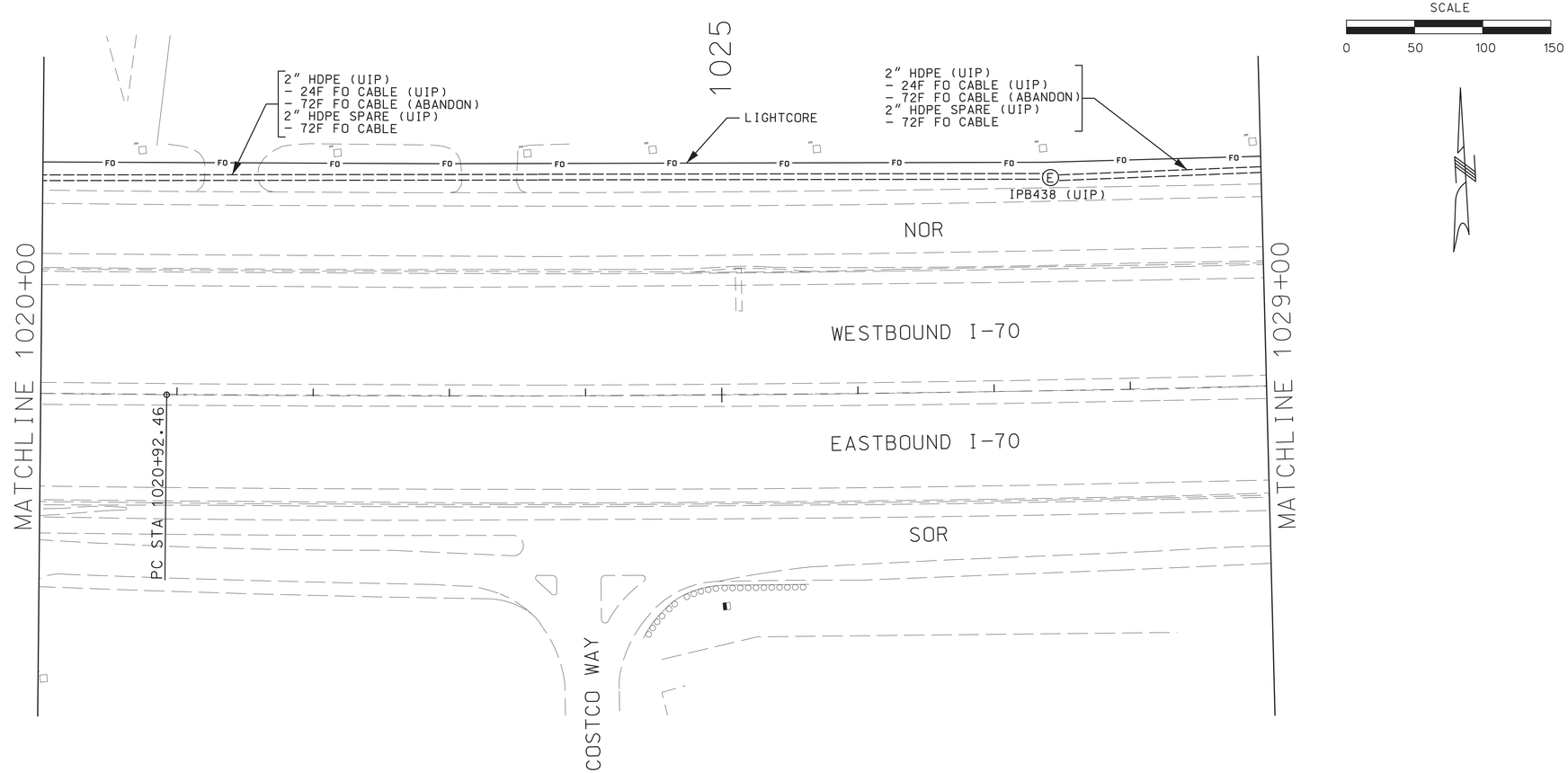

SCALE

0 50 100 150

NON-STANDARD SYMBOLS

	EXISTING / PROPOSED
DYNAMIC MESSAGE SIGN	
DETECTOR, MICROWAVE	
CCTV CAMERA	
POLE-MOUNTED FIELD TERMINAL CABINET	
BASE-MOUNTED FIELD TERMINAL CABINET	
DETECTION ZONE	
CONDUIT, TRENCH	
CONDUIT, DIRECTIONAL DRILL	
CONDUIT, EXTERNAL ON STRUCTURE	
CONDUIT, ABANDON	
PULLBOX, CLASS 1 PREFORMED	
PULLBOX, CLASS 2 PREFORMED	
PULLBOX, ITS	
POLE	
UTILITY PAD-MOUNTED TRANSFORMER	
POWER SUPPLY ASSEMBLY	

ITS PLAN SHEET
SHEET 12 OF 15

STATE OF MISSOURI
CHARLES A. MILLER
NUMBER E-2002000606
REGISTERED PROFESSIONAL ENGINEER

THIS SHEET HAS BEEN SIGNED, SEALED, AND DATED ELECTRONICALLY.

DATE PREPARED	
16-NOV-2012	
ROUTE: I-70	STATE: MO
DISTRICT: SL	SHEET NO.: 16
COUNTY: ST. CHARLES	
JOB NO.: J6I2412	
CONTRACT ID.	
PROJECT NO.	
BRIDGE NO.	

DATE	DESCRIPTION

IF A SEAL IS PRESENT ON THIS SHEET IT HAS BEEN ELECTRONICALLY SEALED AND DATED.

MISSOURI HIGHWAYS AND TRANSPORTATION COMMISSION
MoDOT
105 WEST CAPITOL
JEFFERSON CITY, MO 65102
1-888-ASK-MODOT (1-888-275-6636)

HNTB
715 KIRK DRIVE
KANSAS CITY, MO 64105
(816) 472-1201

REV.

\\kcow00\jobs4\50299\DS005\ITS\Drawings\CD\Plans\016_ITS12_J6I2412_i50.dgn 10:01 AM 16-NOV-2012

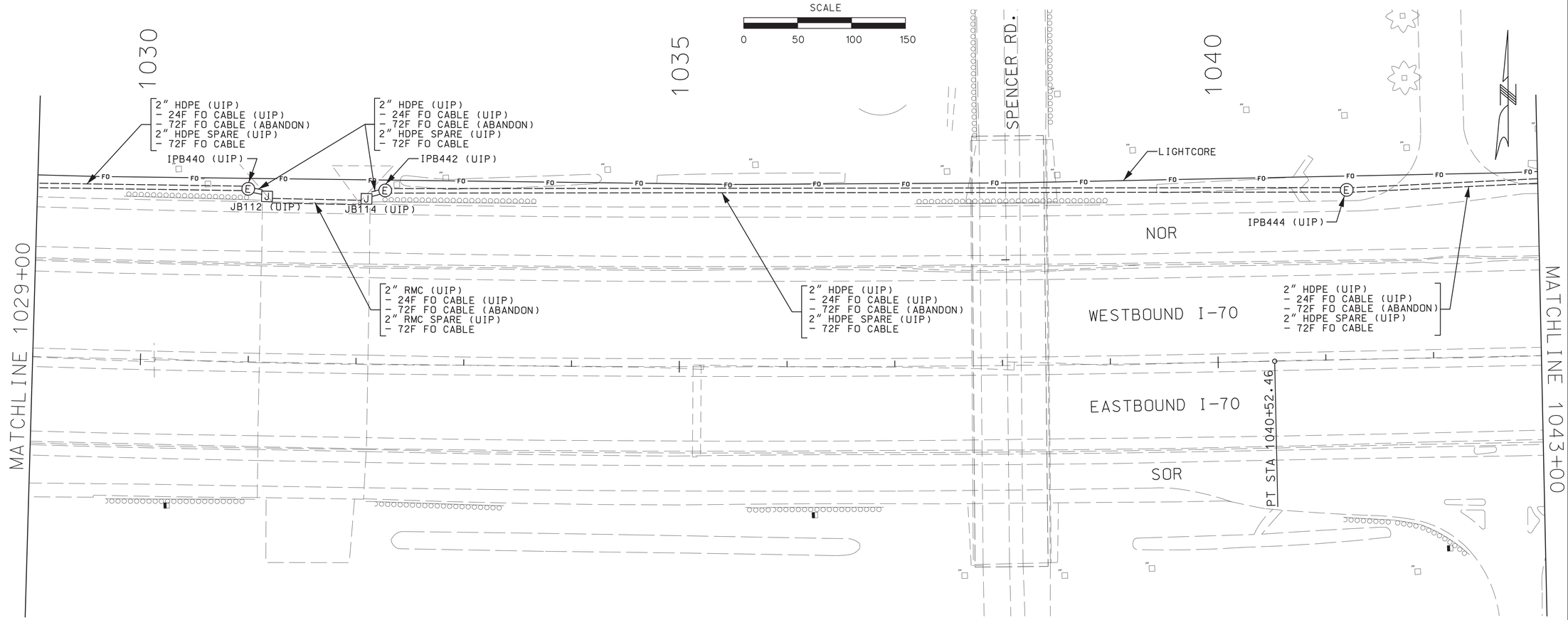

NON-STANDARD SYMBOLS

	EXISTING / PROPOSED
DYNAMIC MESSAGE SIGN	
DETECTOR, MICROWAVE	
CCTV CAMERA	
POLE-MOUNTED FIELD TERMINAL CABINET	
BASE-MOUNTED FIELD TERMINAL CABINET	
DETECTION ZONE	
CONDUIT, TRENCH	
CONDUIT, DIRECTIONAL DRILL	
CONDUIT, EXTERNAL ON STRUCTURE	
CONDUIT, ABANDON	
PULLBOX, CLASS 1 PREFORMED	
PULLBOX, CLASS 2 PREFORMED	
PULLBOX, ITS	
POLE	
UTILITY PAD-MOUNTED TRANSFORMER	
POWER SUPPLY ASSEMBLY	

ITS PLAN SHEET
SHEET 13 OF 15

STATE OF MISSOURI
CHARLES A. MILLER
NUMBER E-2002000606
REGISTERED PROFESSIONAL ENGINEER

THIS SHEET HAS BEEN SIGNED, SEALED, AND DATED ELECTRONICALLY.

DATE PREPARED	16-NOV-2012
ROUTE	I-70
STATE	MO
DISTRICT	SL
SHEET NO.	17
COUNTY	ST. CHARLES
JOB NO.	J6I2412
CONTRACT ID.	
PROJECT NO.	
BRIDGE NO.	

DATE	DESCRIPTION

IF A SEAL IS PRESENT ON THIS SHEET IT HAS BEEN ELECTRONICALLY SEALED AND DATED.

MISSOURI HIGHWAYS AND TRANSPORTATION COMMISSION
105 WEST CAPITOL
JEFFERSON CITY, MO 65102
1-888-ASK-MODOT (1-888-275-6636)

HNTB
715 KIRK DRIVE
KANSAS CITY, MO 64105
(816) 472-1201

REV.

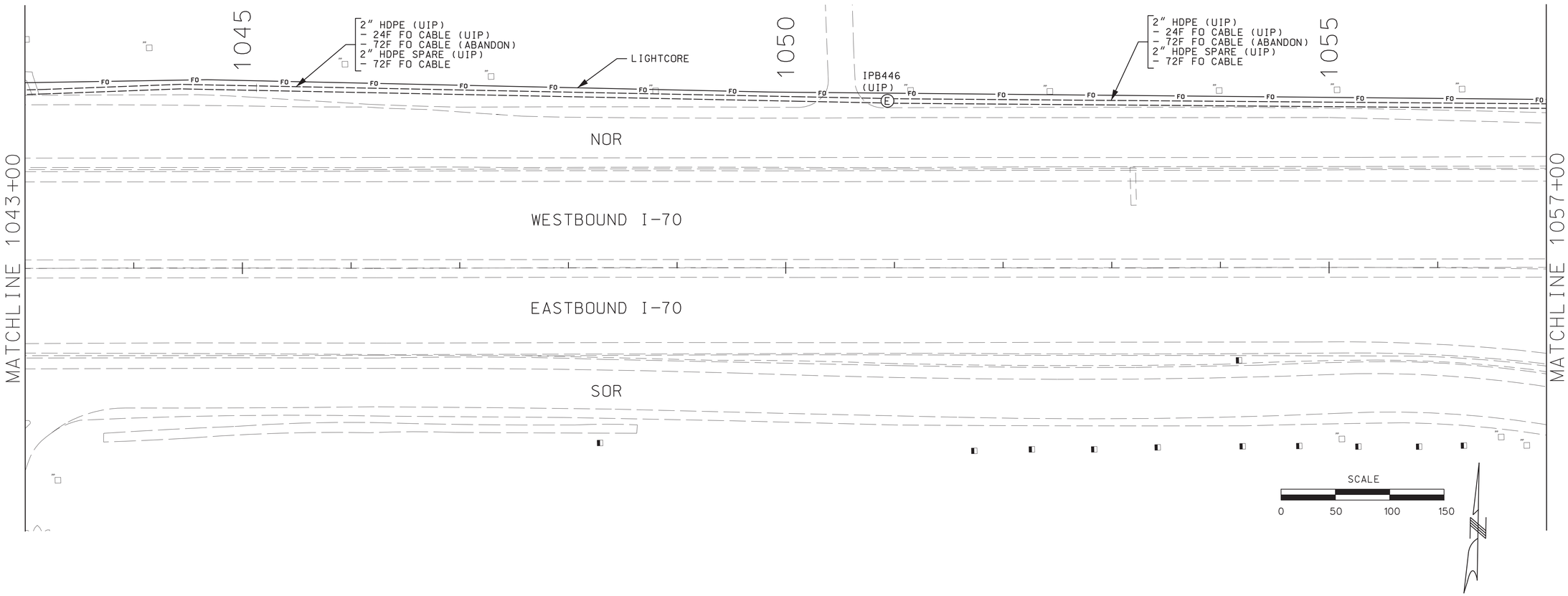

NON-STANDARD SYMBOLS

	EXISTING / PROPOSED
DYNAMIC MESSAGE SIGN	
DETECTOR, MICROWAVE	
CCTV CAMERA	
POLE-MOUNTED FIELD TERMINAL CABINET	
BASE-MOUNTED FIELD TERMINAL CABINET	
DETECTION ZONE	
CONDUIT, TRENCH	
CONDUIT, DIRECTIONAL DRILL	
CONDUIT, EXTERNAL ON STRUCTURE	
CONDUIT, ABANDON	
PULLBOX, CLASS 1 PREFORMED	
PULLBOX, CLASS 2 PREFORMED	
PULLBOX, ITS	
POLE	
UTILITY PAD-MOUNTED TRANSFORMER	
POWER SUPPLY ASSEMBLY	

ITS PLAN SHEET
SHEET 14 OF 15

STATE OF MISSOURI
CHARLES A. MILLER
NUMBER E-2002000606
REGISTERED PROFESSIONAL ENGINEER

THIS SHEET HAS BEEN SIGNED, SEALED, AND DATED ELECTRONICALLY.

DATE PREPARED	
16-NOV-2012	
ROUTE: I-70	STATE: MO
DISTRICT: SL	SHEET NO.: 18
COUNTY: ST. CHARLES	
JOB NO.: J6I2412	
CONTRACT ID.	
PROJECT NO.	
BRIDGE NO.	

DATE	DESCRIPTION

MISSOURI HIGHWAYS AND TRANSPORTATION COMMISSION
105 WEST CAPITOL
JEFFERSON CITY, MO 65102
1-888-ASK-MODOT (1-888-275-6636)

HNTB
715 KIRK DRIVE
KANSAS CITY, MO 64105
(816) 472-1201

IF A SEAL IS PRESENT ON THIS SHEET IT HAS BEEN ELECTRONICALLY SEALED AND DATED.

REV.

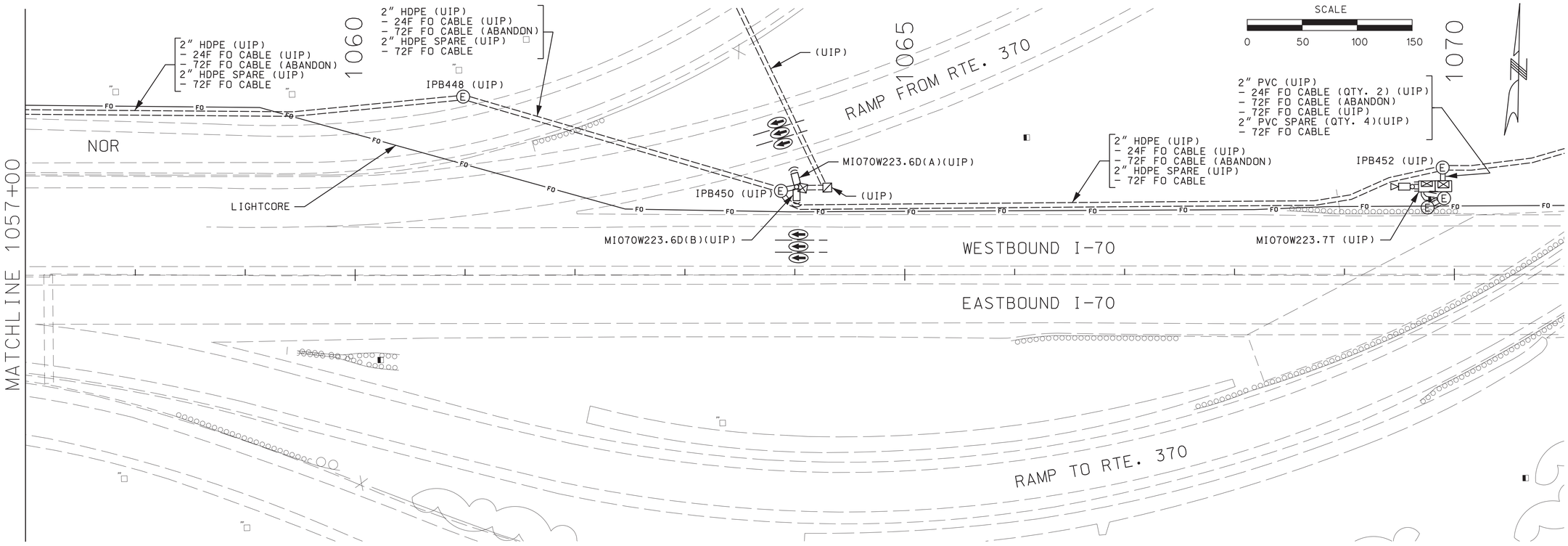

NON-STANDARD SYMBOLS

	EXISTING / PROPOSED
DYNAMIC MESSAGE SIGN	
DETECTOR, MICROWAVE	
CCTV CAMERA	
POLE-MOUNTED FIELD TERMINAL CABINET	
BASE-MOUNTED FIELD TERMINAL CABINET	
DETECTION ZONE	
CONDUIT, TRENCH	
CONDUIT, DIRECTIONAL DRILL	
CONDUIT, EXTERNAL ON STRUCTURE	B
CONDUIT, ABANDON	
PULLBOX, CLASS 1 PREFORMED	
PULLBOX, CLASS 2 PREFORMED	
PULLBOX, ITS	E / I
POLE	
UTILITY PAD-MOUNTED TRANSFORMER	T / T
POWER SUPPLY ASSEMBLY	

ITS PLAN SHEET
SHEET 15 OF 15

STATE OF MISSOURI
CHARLES A. MILLER
NUMBER E-2002000606
REGISTERED PROFESSIONAL ENGINEER

THIS SHEET HAS BEEN SIGNED, SEALED, AND DATED ELECTRONICALLY.

DATE PREPARED	
16-NOV-2012	
ROUTE: I-70	STATE: MO
DISTRICT: SL	SHEET NO.: 19
COUNTY: ST. CHARLES	
JOB NO.: J6I2412	
CONTRACT ID.	
PROJECT NO.	
BRIDGE NO.	

DATE	DESCRIPTION

MISSOURI HIGHWAYS AND TRANSPORTATION COMMISSION
MoDOT
105 WEST CAPITOL
JEFFERSON CITY, MO 65102
1-888-ASK-MODOT (1-888-275-6636)

HNTB
715 KIRK DRIVE
KANSAS CITY, MO 64105
(816) 472-1201

IF A SEAL IS PRESENT ON THIS SHEET IT HAS BEEN ELECTRONICALLY SEALED AND DATED.

REV.

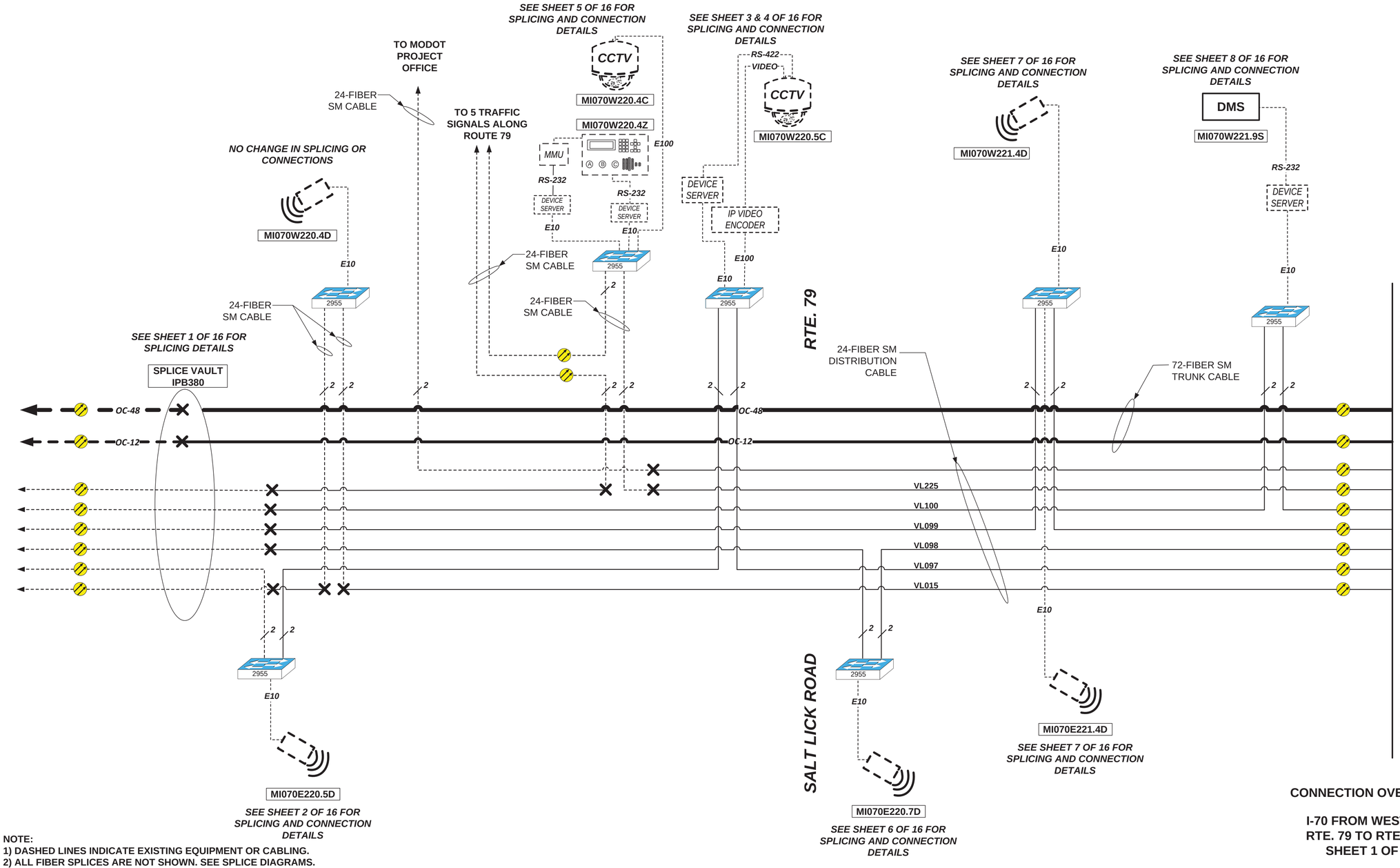

NOTE:
1) DASHED LINES INDICATE EXISTING EQUIPMENT OR CABLING.
2) ALL FIBER SPLICES ARE NOT SHOWN. SEE SPLICE DIAGRAMS.

MI055E001.8T	DEVICE IDENTIFIER	2950 / 2950	EXISTING/PROPOSED CISCO 2950 SWITCH	MMU	MALFUNCTION MANAGEMENT UNIT	MC	MEDIA CONVERTER	VDS AP	VIDEO DETECTION SYSTEM
CCTV / CCTV	EXISTING/PROPOSED CCTV CAMERA	2955 / 3000	EXISTING/PROPOSED CISCO 2955/300 SWITCH	CELL MODEM	CELLULAR MODEM	FO DATA MODEM	FIBER OPTIC DATA MODEM	VD	SENSYS DETECTION SYSTEM
DMS / DMS	EXISTING/PROPOSED DYNAMIC MESSAGE SIGN	A B C / A B C	EXISTING/PROPOSED TRAFFIC SIGNAL CONTROLLER	POWER INJECTOR	WIRELESS ETHERNET BRIDGE	E10	10 MBPS ETHERNET	DEVICE SERVER	IP VIDEO ENCODER
					WIRELESS ETHERNET BRIDGE POWER INJECTOR	E100	100 MBPS ETHERNET		DEVICE SERVER

RADAR DETECTION UNIT	10/100 MBPS ETHERNET LINK		
FIBER OPTIC CABLE	OC-48 LINK		
WIRELESS CONNECTION	OC-12 LINK		
EXISTING/PROPOSED FUSION SPLICE	PROPOSED CABLE		
	EXISTING CABLE		

CONNECTION OVERVIEW

I-70 FROM WEST OF RTE. 79 TO RTE. 370
SHEET 1 OF 2

STATE OF MISSOURI
CHARLES A. MILLER
NUMBER E-2002000606
REGISTERED PROFESSIONAL ENGINEER

THIS SHEET HAS BEEN SIGNED, SEALED, AND DATED ELECTRONICALLY.

DATE PREPARED	16-NOV-2012
ROUTE	I-70
STATE	MO
DISTRICT	SL
SHEET NO.	20
COUNTY	ST. CHARLES
JOB NO.	J6I2412
CONTRACT ID.	
PROJECT NO.	
BRIDGE NO.	

IF A SEAL IS PRESENT ON THIS SHEET IT HAS BEEN ELECTRONICALLY SEALED AND DATED.

DATE	DESCRIPTION	REV.

MISSOURI HIGHWAYS AND TRANSPORTATION COMMISSION
105 WEST CAPITOL
JEFFERSON CITY, MO 65102
1-888-ASK-MODOT (1-888-275-6636)

HNTB
715 KIRK DRIVE
KANSAS CITY, MO 64105
(816) 472-1201

J6I2412_Splicing_v1.VSD 11/16/2012

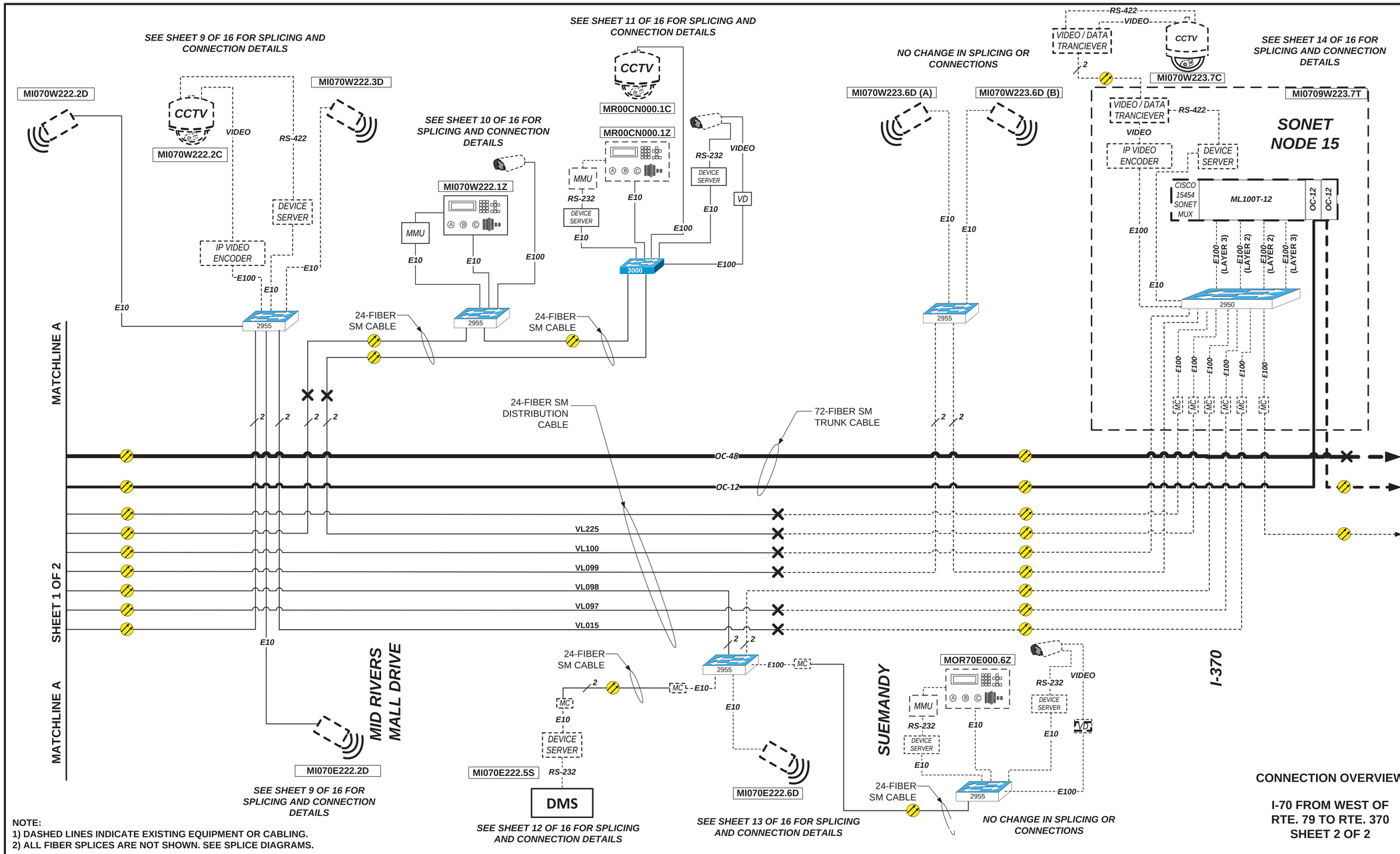

NOTE:
1) DASHED LINES INDICATE EXISTING EQUIPMENT OR CABLING.
2) ALL FIBER SPLICES ARE NOT SHOWN. SEE SPLICE DIAGRAMS.

MI055E001.8T	DEVICE IDENTIFIER
CCTV	EXISTING/PROPOSED CCTV CAMERA
DMS	EXISTING/PROPOSED DYNAMIC MESSAGE SIGN
2950	EXISTING/PROPOSED CISCO 2950 SWITCH
2955 / 3000	EXISTING/PROPOSED CISCO 2955/300 SWITCH
	EXISTING/PROPOSED TRAFFIC SIGNAL CONTROLLER
MMU	MALFUNCTION MANAGEMENT UNIT
CELL MODEM	CELLULAR MODEM
	WIRELESS ETHERNET BRIDGE
POWER INJECTOR	WIRELESS ETHERNET BRIDGE POWER INJECTOR
MC	MEDIA CONVERTER
FO DATA MODEM	FIBER OPTIC DATA MODEM
E10	10 MBPS ETHERNET
E100	100 MBPS ETHERNET
	VIDEO DETECTION SYSTEM
VDS AP	SENSYS DETECTION SYSTEM
VD	IP VIDEO ENCODER
DEVICE SERVER	DEVICE SERVER
	RADAR DETECTION UNIT
	FIBER OPTIC CABLE
	WIRELESS CONNECTION
	EXISTING/PROPOSED FUSION SPLICE
	10/100 MBPS ETHERNET LINK
	OC-48 LINK
	OC-12 LINK
	PROPOSED CABLE
	EXISTING CABLE

CONNECTION OVERVIEW

I-70 FROM WEST OF RTE. 79 TO RTE. 370 SHEET 2 OF 2

STATE OF MISSOURI
CHARLES A. MILLER
NUMBER E-2002000606
REGISTERED PROFESSIONAL ENGINEER

THIS SHEET HAS BEEN SIGNED, SEALED, AND DATED ELECTRONICALLY.

DATE PREPARED	16-NOV-2012
ROUTE	I-70
STATE	MO
DISTRICT	SL
SHEET NO.	21
COUNTY	ST. CHARLES
JOB NO.	J6I2412
CONTRACT ID.	
PROJECT NO.	
BRIDGE NO.	

DESCRIPTION | DATE

IF A SEAL IS PRESENT ON THIS SHEET IT HAS BEEN ELECTRONICALLY SEALED AND DATED.

MISSOURI HIGHWAYS AND TRANSPORTATION COMMISSION
MoDOT
105 WEST CAPITOL
JEFFERSON CITY, MO 65102
1-888-ASK-MODOT (1-888-275-6638)

HNTB
715 KIRK DRIVE
KANSAS CITY, MO 64105
(816) 472-1201

REV.

J6I2412_Splicing_v1.VSD 11/16/2012

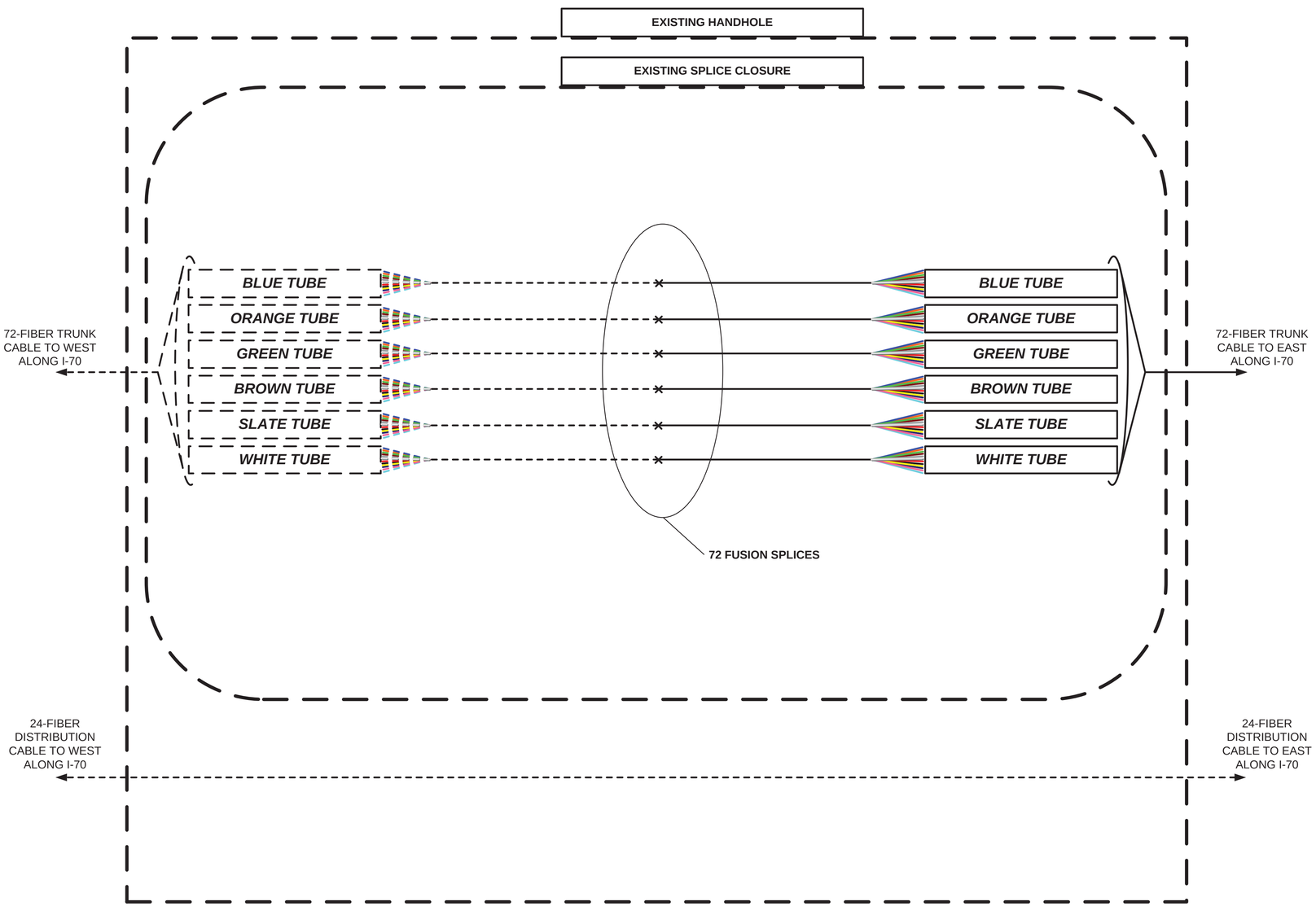

KEY

MI170N123.4C	DEVICE IDENTIFIER
CCTV	CCTV CAMERA
CCTV	EXISTING CCTV CAMERA
DMS	DYNAMIC MESSAGE SIGN
DMS	EXISTING DYNAMIC MESSAGE SIGN
	SM PATCH THROUGH FIBER OPTIC JUMPER
	SM EQUIPMENT CONNECTION FIBER OPTIC JUMPER
	SM FIBER OPTIC PIGTAIL
	MM PATCH THROUGH FIBER OPTIC JUMPER
	MM EQUIPMENT CONNECTION FIBER OPTIC JUMPER
	MM FIBER OPTIC PIGTAIL
	BARE FIBER LEFT COILED IN SPLICE TRAY
	EXISTING/PROPOSED FUSION SPLICE
	PATCH PANEL MODULE
	WIRELESS LINK
VDS AP	SENSYS DETECTION SYSTEM

1. MAXIMUM SPLICE LOSS SHALL BE 0.1 dB
2. NO INTERMEDIATE SPLICES ALLOWED
3. ALL SPLICES SHALL BE FUSION SPLICES
4. DASHED LINES INDICATE EXISTING EQUIPMENT OR CABLING.

FIBER SPLICING & BLOCK DIAGRAM
IPB380
EXISTING HANDHOLE AND UNDERGROUND SPLICE CLOSURE
SHEET 1 OF 16

STATE OF MISSOURI
CHARLES A. MILLER
NUMBER E-2002000606
REGISTERED PROFESSIONAL ENGINEER

THIS SHEET HAS BEEN SIGNED, SEALED, AND DATED ELECTRONICALLY.

DATE PREPARED	16-NOV-2012
ROUTE I-70	STATE MO
DISTRICT SL	SHEET NO. 22
COUNTY	ST. CHARLES
JOB NO.	J6I2412
CONTRACT ID.	
PROJECT NO.	
BRIDGE NO.	

DESCRIPTION | DATE

MISSOURI HIGHWAYS AND TRANSPORTATION COMMISSION
105 WEST CAPITOL
JEFFERSON CITY, MO 65102
1-888-ASK-MODOT (1-888-275-6636)

HNTB
715 KIRK DRIVE
KANSAS CITY, MO 64105
(816) 472-1201

IF A SEAL IS PRESENT ON THIS SHEET IT HAS BEEN ELECTRONICALLY SEALED AND DATED.

REV.

J6I2412_Splicing_v1.VSD 11/16/2012

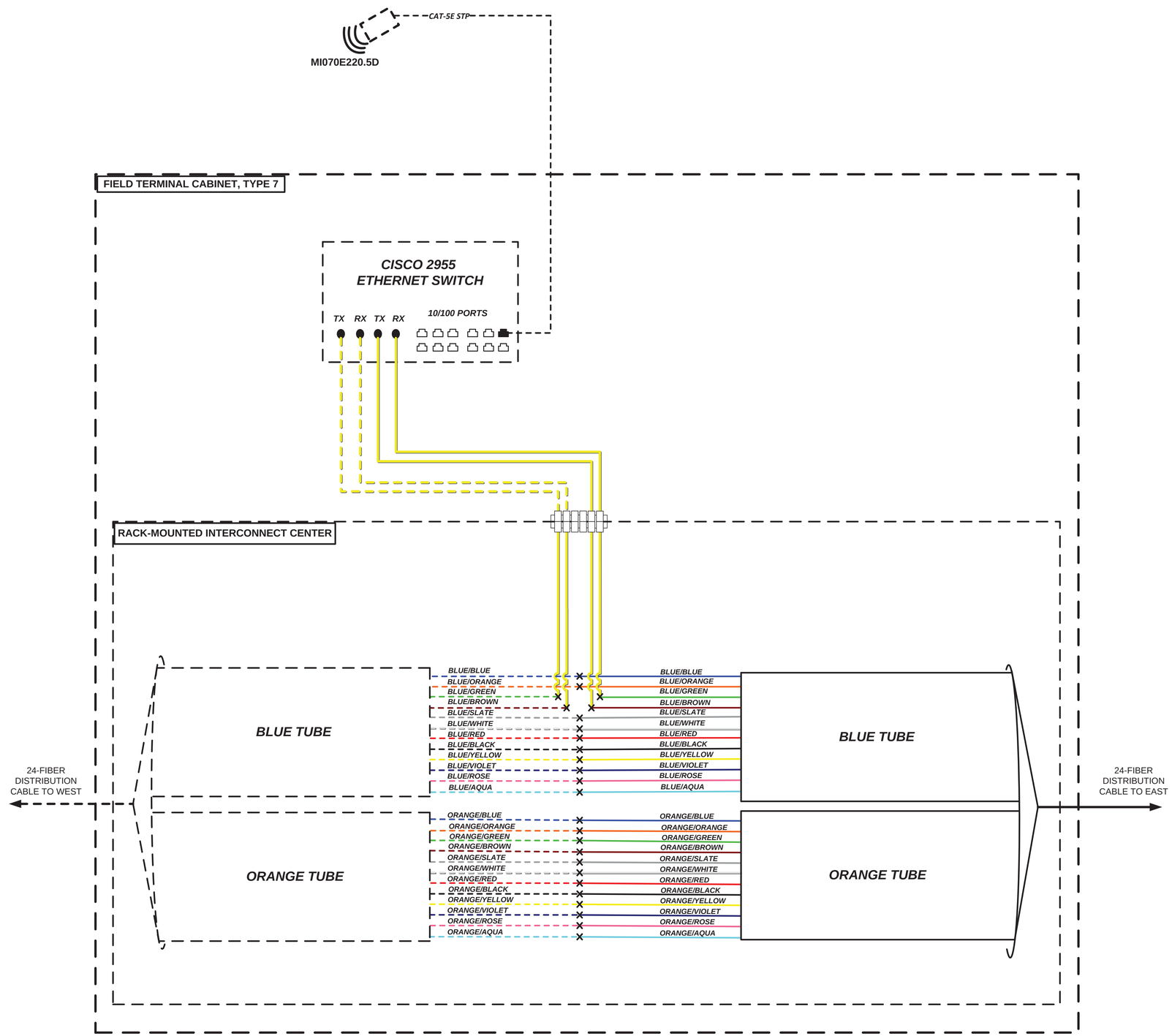

KEY

MI170N123.4C	DEVICE IDENTIFIER
CCTV	CCTV CAMERA
CCTV	EXISTING CCTV CAMERA
DMS	DYNAMIC MESSAGE SIGN
DMS	EXISTING DYNAMIC MESSAGE SIGN
	SM PATCH THROUGH FIBER OPTIC JUMPER
	SM EQUIPMENT CONNECTION FIBER OPTIC JUMPER
	SM FIBER OPTIC PIGTAIL
	MM PATCH THROUGH FIBER OPTIC JUMPER
	MM EQUIPMENT CONNECTION FIBER OPTIC JUMPER
	MM FIBER OPTIC PIGTAIL
	BARE FIBER LEFT COILED IN SPLICE TRAY
	EXISTING/PROPOSED FUSION SPLICE
	PATCH PANEL MODULE
	WIRELESS LINK
VDS AP	SENSYS DETECTION SYSTEM

1. MAXIMUM SPLICE LOSS SHALL BE 0.1 dB
2. NO INTERMEDIATE SPLICES ALLOWED
3. ALL SPLICES SHALL BE FUSION SPLICES
4. DASHED LINES INDICATE EXISTING EQUIPMENT OR CABLING.

VLAN
VL097

FIBER SPLICING & BLOCK DIAGRAM

EXISTING RADAR DETECTOR MI070E220.5D SHEET 2 OF 16

STATE OF MISSOURI
CHARLES A. MILLER
NUMBER E-2002000606
REGISTERED PROFESSIONAL ENGINEER

THIS SHEET HAS BEEN SIGNED, SEALED, AND DATED ELECTRONICALLY.

DATE PREPARED	16-NOV-2012
ROUTE	I-70
STATE	MO
DISTRICT	SL
SHEET NO.	23
COUNTY	ST. CHARLES
JOB NO.	J6I2412
CONTRACT ID.	
PROJECT NO.	
BRIDGE NO.	

REV.	DATE	DESCRIPTION

IF A SEAL IS PRESENT ON THIS SHEET IT HAS BEEN ELECTRONICALLY SEALED AND DATED.

MISSOURI HIGHWAYS AND TRANSPORTATION COMMISSION
105 WEST CAPITOL
JEFFERSON CITY, MO 65102
1-888-ASK-MODOT (1-888-275-6636)

HNTB
715 KIRK DRIVE
KANSAS CITY, MO 64105
(816) 472-1201

J6I2412_Splicing_v1.VSD 11/16/2012

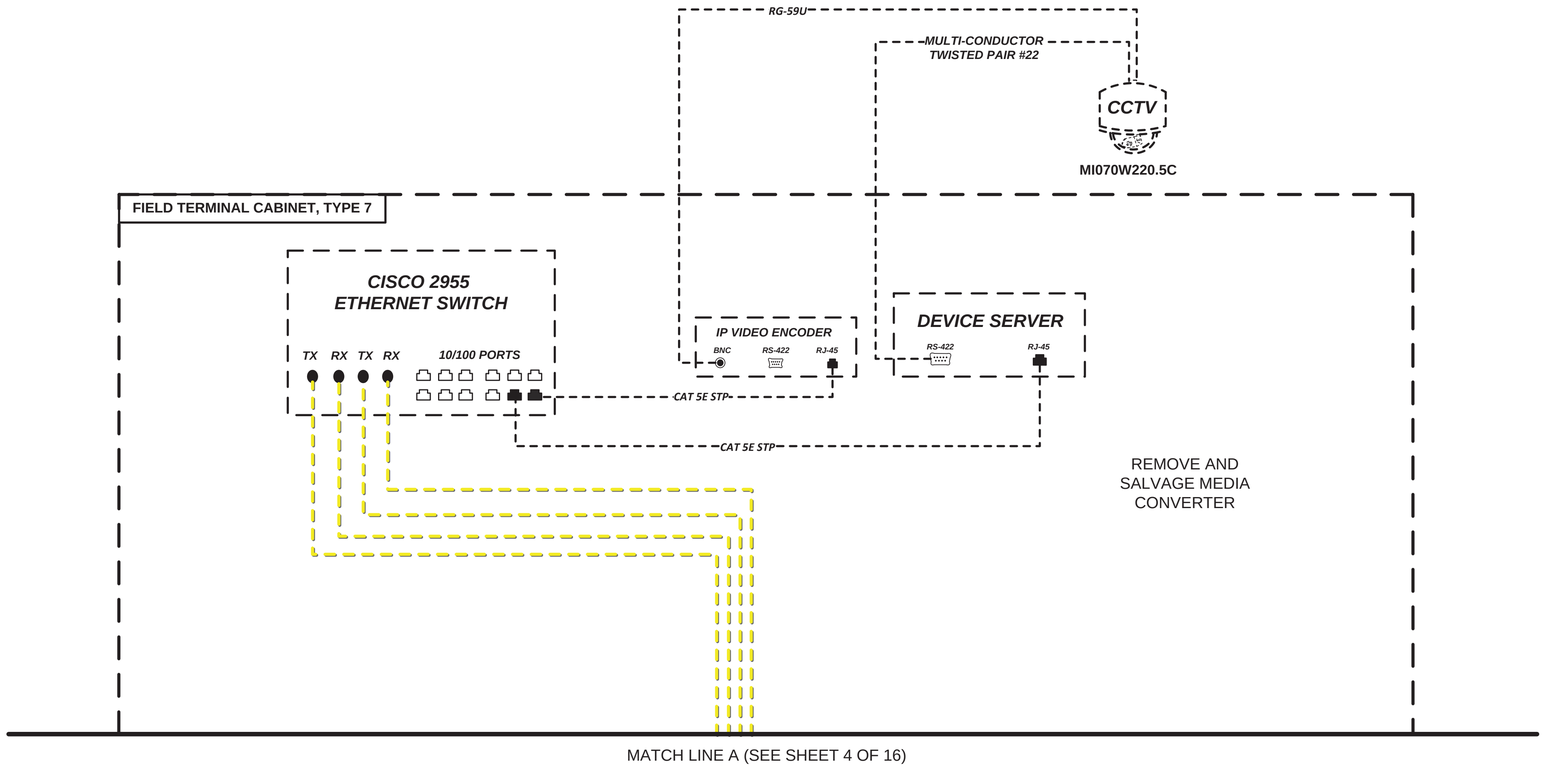

KEY

MI170N123.4C	DEVICE IDENTIFIER
CCTV	CCTV CAMERA
CCTV	EXISTING CCTV CAMERA
DMS	DYNAMIC MESSAGE SIGN
DMS	EXISTING DYNAMIC MESSAGE SIGN
	SM PATCH THROUGH FIBER OPTIC JUMPER
	SM EQUIPMENT CONNECTION FIBER OPTIC JUMPER
	SM FIBER OPTIC PIGTAIL
	MM PATCH THROUGH FIBER OPTIC JUMPER
	MM EQUIPMENT CONNECTION FIBER OPTIC JUMPER
	MM FIBER OPTIC PIGTAIL
	BARE FIBER LEFT COILED IN SPLICE TRAY
	EXISTING/PROPOSED FUSION SPLICE
	PATCH PANEL MODULE
	WIRELESS LINK
VDS AP	SENSYS DETECTION SYSTEM

1. MAXIMUM SPLICE LOSS SHALL BE 0.1 dB
2. NO INTERMEDIATE SPLICES ALLOWED
3. ALL SPLICES SHALL BE FUSION SPLICES
4. DASHED LINES INDICATE EXISTING EQUIPMENT OR CABLING.

VLAN
VL097

FIBER SPLICING &
BLOCK DIAGRAM

EXISTING CCTV CAMERA
MI070W220.5C
SHEET 3 OF 16

STATE OF MISSOURI
CHARLES A. MILLER
NUMBER E-2002000606
REGISTERED PROFESSIONAL ENGINEER

THIS SHEET HAS BEEN SIGNED, SEALED, AND DATED ELECTRONICALLY.

DATE PREPARED	16-NOV-2012
ROUTE	I-70
STATE	MO
DISTRICT	SL
SHEET NO.	24
COUNTY	ST. CHARLES
JOB NO.	J6I2412
CONTRACT ID.	
PROJECT NO.	
BRIDGE NO.	

DESCRIPTION

DATE

MISSOURI HIGHWAYS AND TRANSPORTATION COMMISSION
105 WEST CAPITOL
JEFFERSON CITY, MO 65102
1-888-ASK-MODOT (1-888-275-6636)

HNTB
715 KIRK DRIVE
KANSAS CITY, MO 64105
(816) 472-1201

IF A SEAL IS PRESENT ON THIS SHEET IT HAS BEEN ELECTRONICALLY SEALED AND DATED.

REV.

J6I2412_Splicing_v1.VSD 11/16/2012

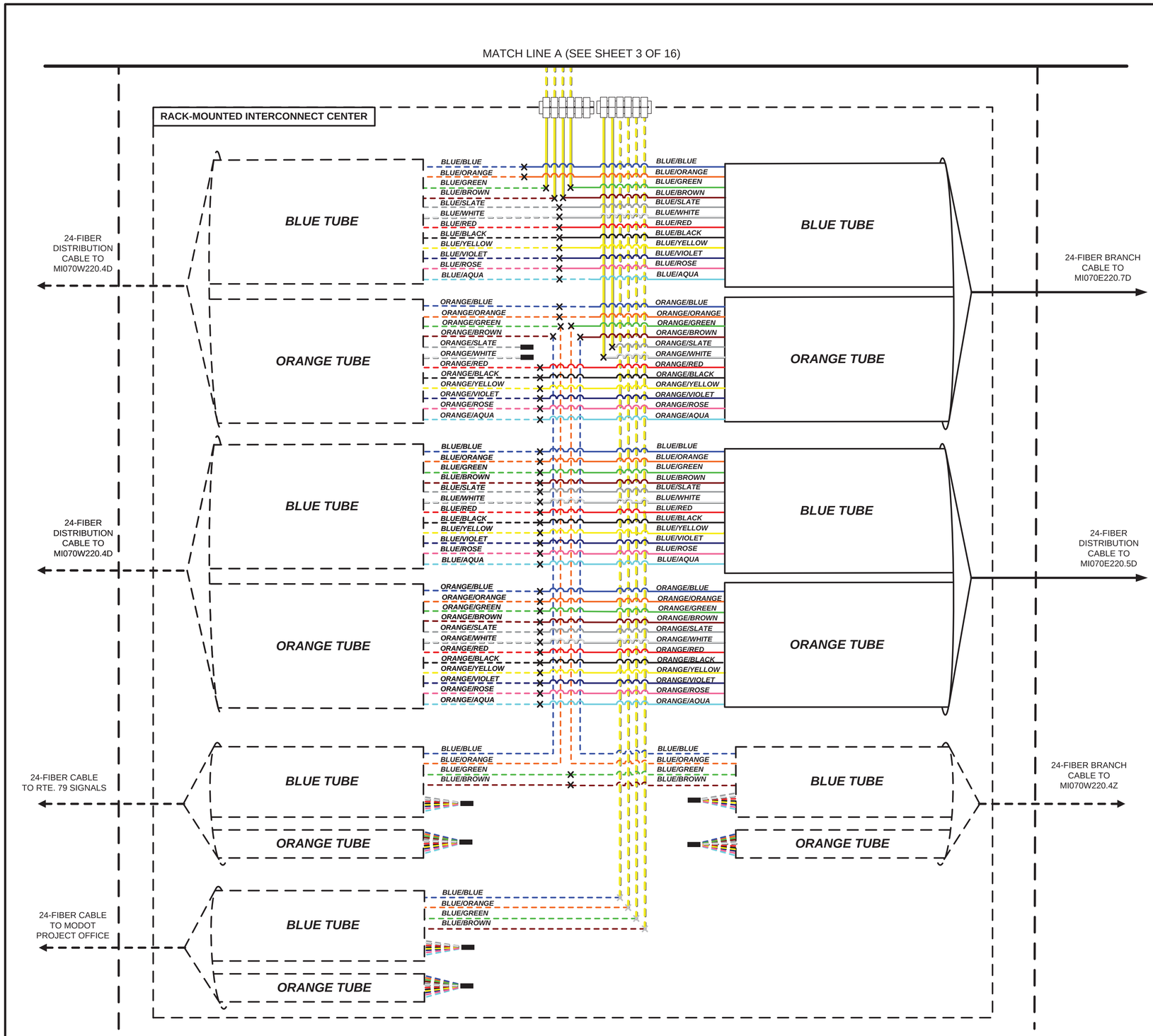

KEY

MI170N123.4C	DEVICE IDENTIFIER
CCTV	CCTV CAMERA
CCTV	EXISTING CCTV CAMERA
DMS	DYNAMIC MESSAGE SIGN
DMS	EXISTING DYNAMIC MESSAGE SIGN
	SM PATCH THROUGH FIBER OPTIC JUMPER
	SM EQUIPMENT CONNECTION FIBER OPTIC JUMPER
	SM FIBER OPTIC PIGTAIL
	MM PATCH THROUGH FIBER OPTIC JUMPER
	MM EQUIPMENT CONNECTION FIBER OPTIC JUMPER
	MM FIBER OPTIC PIGTAIL
	BARE FIBER LEFT COILED IN SPLICE TRAY
	EXISTING/PROPOSED FUSION SPLICE
	PATCH PANEL MODULE
	WIRELESS LINK
VDS AP	SENSYS DETECTION SYSTEM

1. MAXIMUM SPLICE LOSS SHALL BE 0.1 dB
2. NO INTERMEDIATE SPLICES ALLOWED
3. ALL SPLICES SHALL BE FUSION SPLICES
4. DASHED LINES INDICATE EXISTING EQUIPMENT OR CABLING.

FIBER SPLICING & BLOCK DIAGRAM

EXISTING CCTV CAMERA MI070W220.5C SHEET 4 OF 16

STATE OF MISSOURI
CHARLES A. MILLER
NUMBER E-2002000606
REGISTERED PROFESSIONAL ENGINEER

THIS SHEET HAS BEEN SIGNED, SEALED, AND DATED ELECTRONICALLY.

DATE PREPARED	16-NOV-2012
ROUTE	I-70
STATE	MO
DISTRICT	SL
SHEET NO.	25
COUNTY	ST. CHARLES
JOB NO.	J6I2412
CONTRACT ID.	
PROJECT NO.	
BRIDGE NO.	

DESCRIPTION

DATE

MISSOURI HIGHWAYS AND TRANSPORTATION COMMISSION

105 WEST CAPITOL
JEFFERSON CITY, MO 65102
1-888-ASK-MODOT (1-888-275-6636)

MoDOT

HNTB

715 KIRK DRIVE
KANSAS CITY, MO 64105
(816) 472-1201

IF A SEAL IS PRESENT ON THIS SHEET IT HAS BEEN ELECTRONICALLY SEALED AND DATED.

REV.

J6I2412_Splicing_v1.VSD

11/16/2012

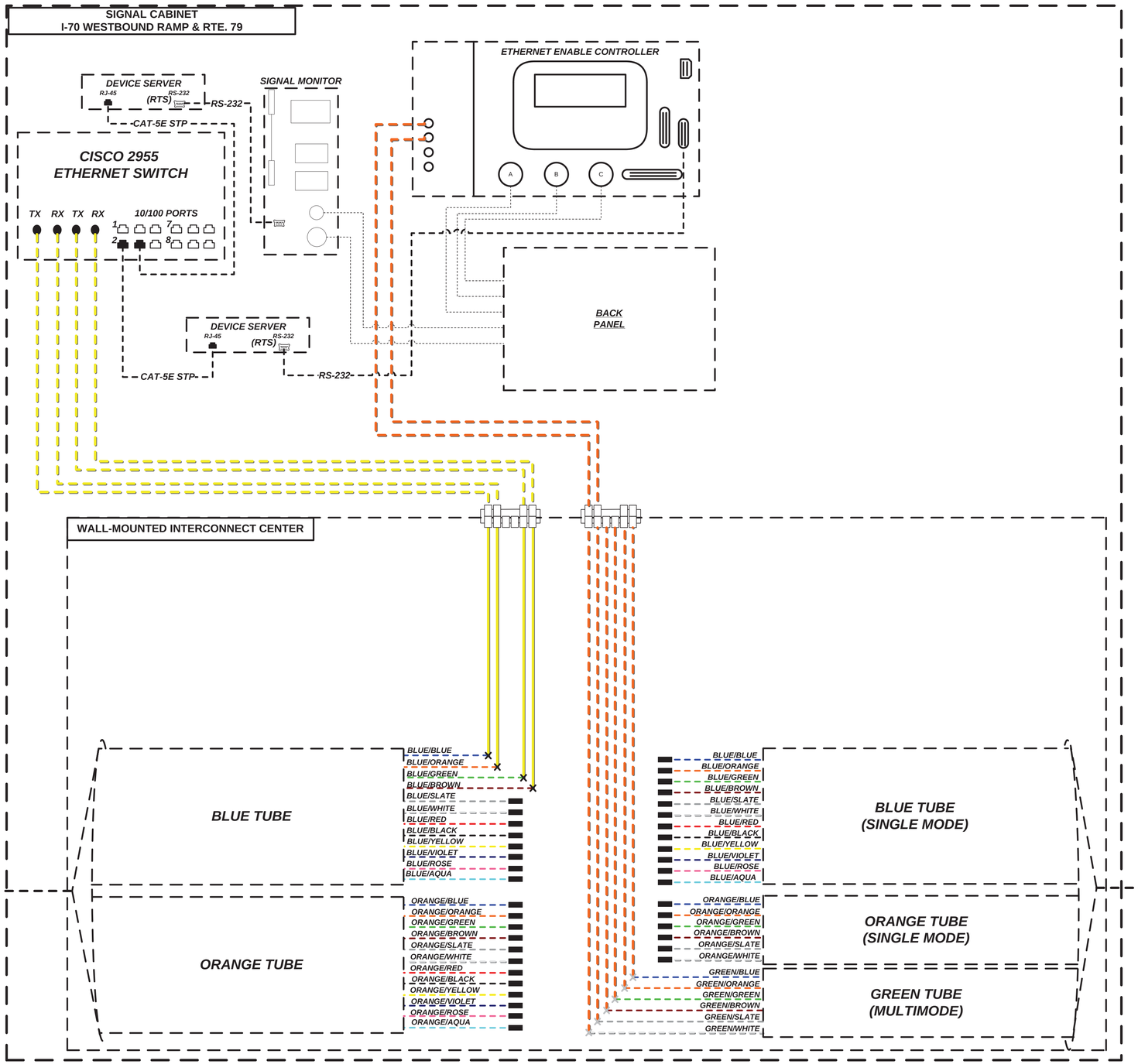

KEY

MI170N123.4C	DEVICE IDENTIFIER
CCTV	CCTV CAMERA
CCTV	EXISTING CCTV CAMERA
DMS	DYNAMIC MESSAGE SIGN
DMS	EXISTING DYNAMIC MESSAGE SIGN
	SM PATCH THROUGH FIBER OPTIC JUMPER
	SM EQUIPMENT CONNECTION FIBER OPTIC JUMPER
	SM FIBER OPTIC PIGTAIL
	MM PATCH THROUGH FIBER OPTIC JUMPER
	MM EQUIPMENT CONNECTION FIBER OPTIC JUMPER
	MM FIBER OPTIC PIGTAIL
	BARE FIBER LEFT COILED IN SPLICE TRAY
	EXISTING/PROPOSED FUSION SPLICE
	PATCH PANEL MODULE
	WIRELESS LINK
VDS AP	SENSYS DETECTION SYSTEM

1. MAXIMUM SPLICE LOSS SHALL BE 0.1 dB
2. NO INTERMEDIATE SPLICES ALLOWED
3. ALL SPLICES SHALL BE FUSION SPLICES
4. DASHED LINES INDICATE EXISTING EQUIPMENT OR CABLING.

VLAN
VL225

FIBER SPLICING & BLOCK DIAGRAM

WESTBOUND I-70 RAMP & RTE. 79
MI070W220.4Z
SHEET 5 OF 16

STATE OF MISSOURI
CHARLES A. MILLER
NUMBER E-2002000808
REGISTERED PROFESSIONAL ENGINEER

THIS SHEET HAS BEEN SIGNED, SEALED, AND DATED ELECTRONICALLY.

DATE PREPARED	16-NOV-2012
ROUTE	I-70
STATE	MO
DISTRICT	SL
SHEET NO.	26
COUNTY	ST. CHARLES
JOB NO.	J6I2412
CONTRACT ID.	
PROJECT NO.	
BRIDGE NO.	

DESCRIPTION

DATE

IF A SEAL IS PRESENT ON THIS SHEET IT HAS BEEN ELECTRONICALLY SEALED AND DATED.

MISSOURI HIGHWAYS AND TRANSPORTATION COMMISSION
MoDOT
105 WEST CAPITOL
JEFFERSON CITY, MO 65102
1-888-ASK-MODOT (1-888-275-6636)

HNTB
715 KIRK DRIVE
KANSAS CITY, MO 64105
(816) 472-1201

REV.

J6I2412_Splicing_v1.VSD 11/16/2012

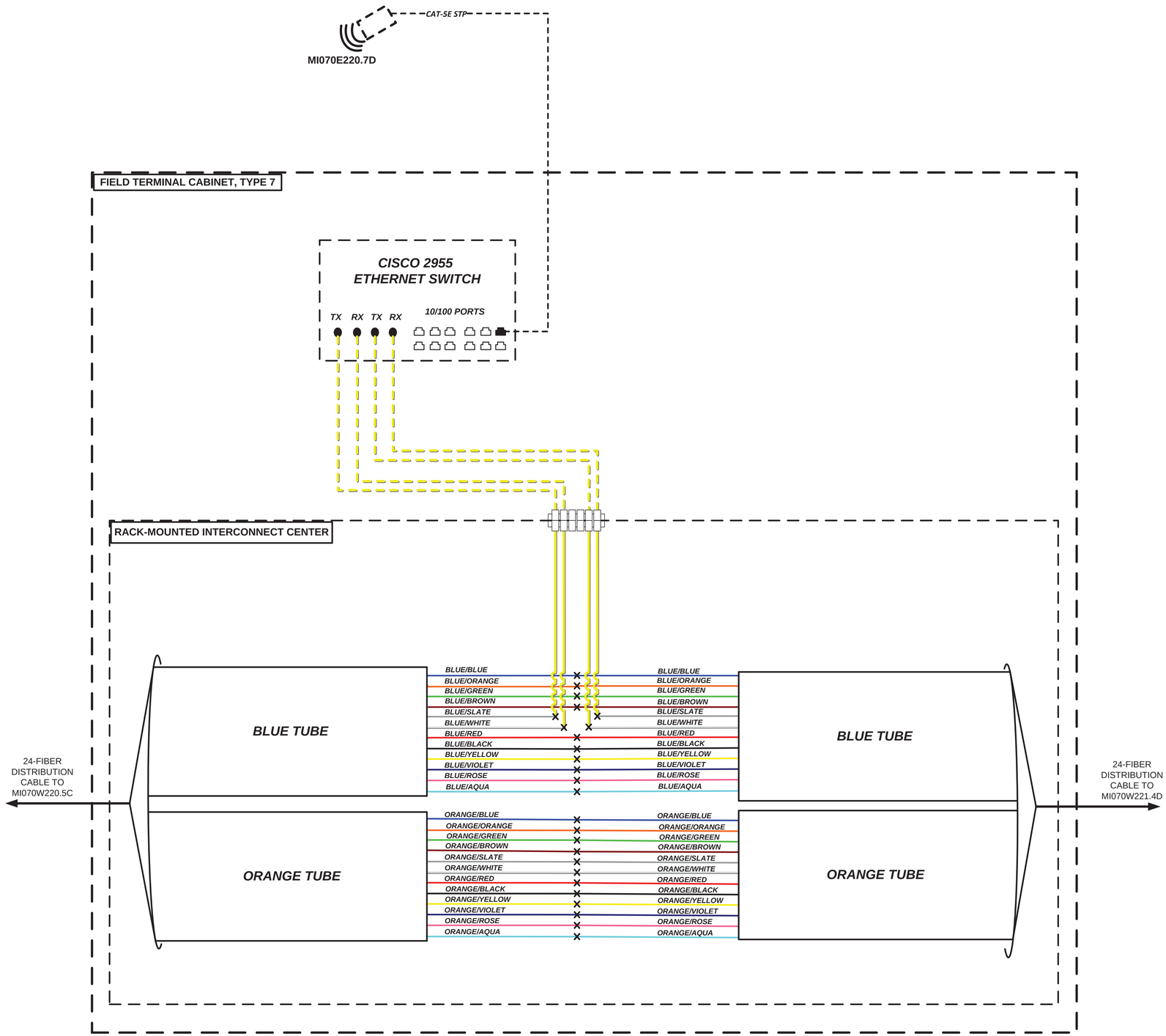

KEY

MI170N123.4C	DEVICE IDENTIFIER
CCTV	CCTV CAMERA
CCTV	EXISTING CCTV CAMERA
DMS	DYNAMIC MESSAGE SIGN
DMS	EXISTING DYNAMIC MESSAGE SIGN
	SM PATCH THROUGH FIBER OPTIC JUMPER
	SM EQUIPMENT CONNECTION FIBER OPTIC JUMPER
	SM FIBER OPTIC PIGTAIL
	MM PATCH THROUGH FIBER OPTIC JUMPER
	MM EQUIPMENT CONNECTION FIBER OPTIC JUMPER
	MM FIBER OPTIC PIGTAIL
	BARE FIBER LEFT COILED IN SPLICE TRAY
	EXISTING/PROPOSED FUSION SPLICE
	PATCH PANEL MODULE
	WIRELESS LINK
VDS AP	SENSYS DETECTION SYSTEM

1. MAXIMUM SPLICE LOSS SHALL BE 0.1 dB
2. NO INTERMEDIATE SPLICES ALLOWED
3. ALL SPLICES SHALL BE FUSION SPLICES
4. DASHED LINES INDICATE EXISTING EQUIPMENT OR CABLING.

VLAN VL098

FIBER SPLICING & BLOCK DIAGRAM

EXISTING RADAR DETECTOR MI070E220.7D SHEET 6 OF 16

STATE OF MISSOURI
CHARLES A. MILLER
NUMBER E-2002000606
REGISTERED PROFESSIONAL ENGINEER

THIS SHEET HAS BEEN SIGNED, SEALED, AND DATED ELECTRONICALLY.

DATE PREPARED	16-NOV-2012
ROUTE	I-70
STATE	MO
DISTRICT	SL
SHEET NO.	27
COUNTY	ST. CHARLES
JOB NO.	J6I2412
CONTRACT ID.	
PROJECT NO.	
BRIDGE NO.	

DATE	DESCRIPTION

MISSOURI HIGHWAYS AND TRANSPORTATION COMMISSION
105 WEST CAPITOL
JEFFERSON CITY, MO 65102
1-888-ASK-MODOT (1-888-275-6636)

HNTB
715 KIRK DRIVE
KANSAS CITY, MO 64105
(816) 472-1201

IF A SEAL IS PRESENT ON THIS SHEET IT HAS BEEN ELECTRONICALLY SEALED AND DATED.

REV.

J6I2412_Splicing_v1.VSD 11/16/2012

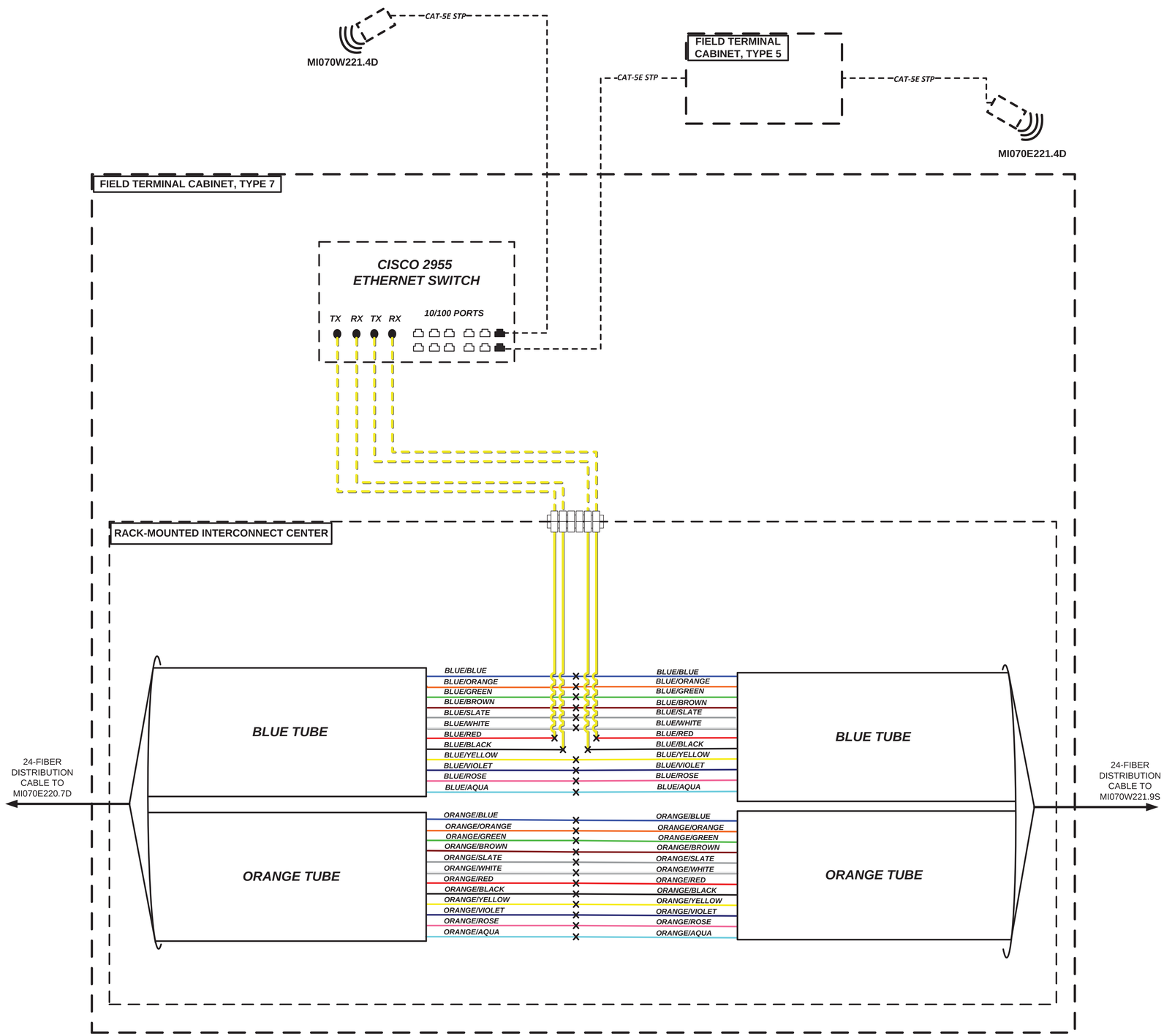

KEY

MI170N123.4C	DEVICE IDENTIFIER
CCTV	CCTV CAMERA
CCTV	EXISTING CCTV CAMERA
DMS	DYNAMIC MESSAGE SIGN
DMS	EXISTING DYNAMIC MESSAGE SIGN
	SM PATCH THROUGH FIBER OPTIC JUMPER
	SM EQUIPMENT CONNECTION FIBER OPTIC JUMPER
	SM FIBER OPTIC PIGTAIL
	MM PATCH THROUGH FIBER OPTIC JUMPER
	MM EQUIPMENT CONNECTION FIBER OPTIC JUMPER
	MM FIBER OPTIC PIGTAIL
	BARE FIBER LEFT COILED IN SPLICE TRAY
	EXISTING/PROPOSED FUSION SPLICE
	PATCH PANEL MODULE
	WIRELESS LINK
VDS AP	SENSYS DETECTION SYSTEM

1. MAXIMUM SPLICE LOSS SHALL BE 0.1 dB
2. NO INTERMEDIATE SPLICES ALLOWED
3. ALL SPLICES SHALL BE FUSION SPLICES
4. DASHED LINES INDICATE EXISTING EQUIPMENT OR CABLING.

VLAN VL099

FIBER SPLICING & BLOCK DIAGRAM

EXISTING RADAR DETECTOR MI070W221.4D & MI070E221.4D SHEET 7 OF 16

STATE OF MISSOURI
CHARLES A. MILLER
NUMBER E-2002000606
REGISTERED PROFESSIONAL ENGINEER

THIS SHEET HAS BEEN SIGNED, SEALED, AND DATED ELECTRONICALLY.

DATE PREPARED	16-NOV-2012
ROUTE	I-70
STATE	MO
DISTRICT	SL
SHEET NO.	28
COUNTY	ST. CHARLES
JOB NO.	J6I2412
CONTRACT ID.	
PROJECT NO.	
BRIDGE NO.	

DESCRIPTION | DATE

MISSOURI HIGHWAYS AND TRANSPORTATION COMMISSION
105 WEST CAPITOL
JEFFERSON CITY, MO 65102
1-888-ASK-MODOT (1-888-275-6636)

HNTB
715 KIRK DRIVE
KANSAS CITY, MO 64105
(816) 472-1201

IF A SEAL IS PRESENT ON THIS SHEET IT HAS BEEN ELECTRONICALLY SEALED AND DATED.

REV.

J6I2412_Splicing_v1.VSD 11/16/2012

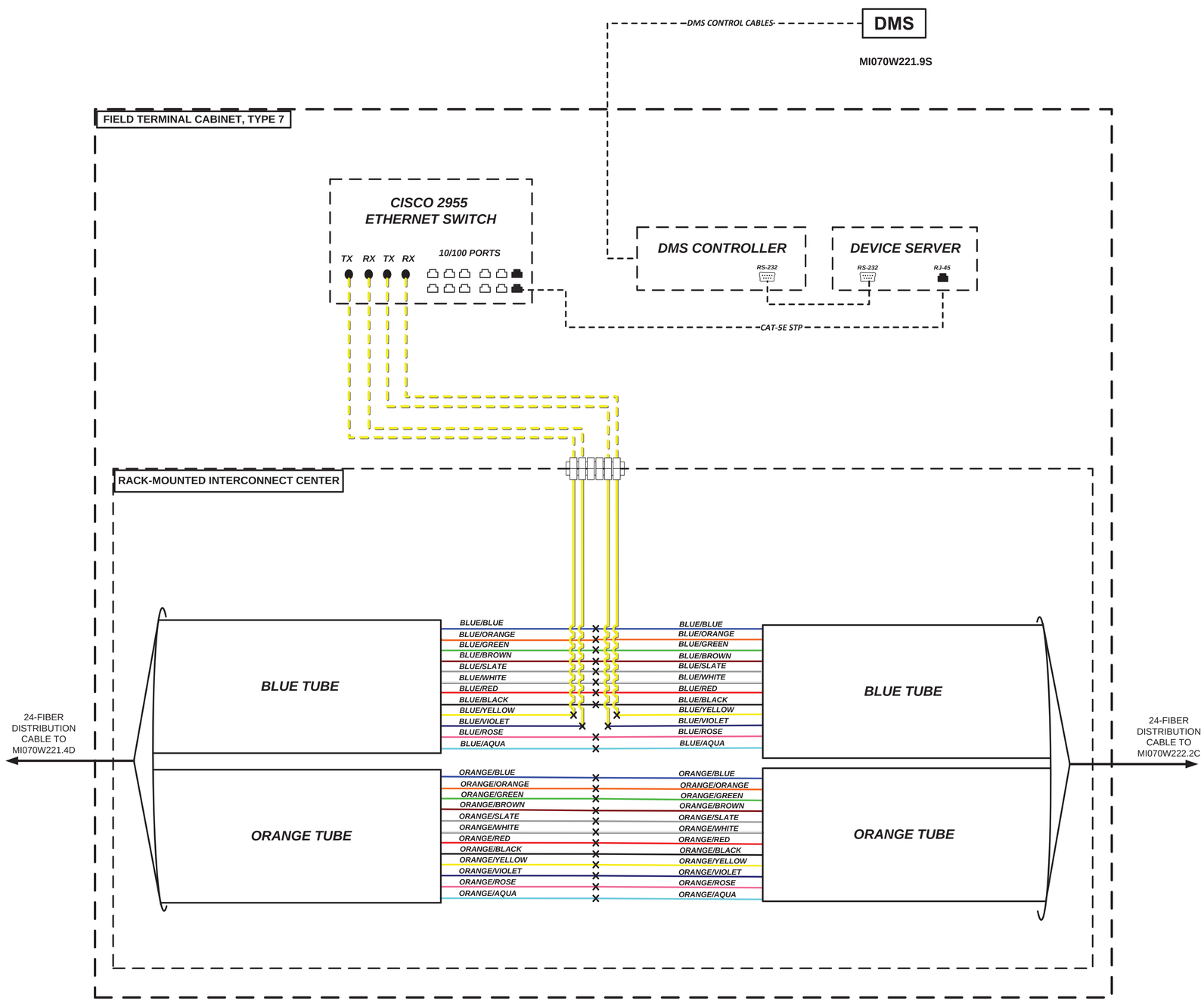

KEY

MI170N123.4C	DEVICE IDENTIFIER
CCTV	CCTV CAMERA
CCTV	EXISTING CCTV CAMERA
DMS	DYNAMIC MESSAGE SIGN
DMS	EXISTING DYNAMIC MESSAGE SIGN
	SM PATCH THROUGH FIBER OPTIC JUMPER
	SM EQUIPMENT CONNECTION FIBER OPTIC JUMPER
	SM FIBER OPTIC PIGTAIL
	MM PATCH THROUGH FIBER OPTIC JUMPER
	MM EQUIPMENT CONNECTION FIBER OPTIC JUMPER
	MM FIBER OPTIC PIGTAIL
	BARE FIBER LEFT COILED IN SPLICE TRAY
	EXISTING/PROPOSED FUSION SPLICE
	PATCH PANEL MODULE
	WIRELESS LINK
VDS AP	SENSYS DETECTION SYSTEM

1. MAXIMUM SPLICE LOSS SHALL BE 0.1 dB
2. NO INTERMEDIATE SPLICES ALLOWED
3. ALL SPLICES SHALL BE FUSION SPLICES
4. DASHED LINES INDICATE EXISTING EQUIPMENT OR CABLING.

VLAN
VL100

FIBER SPLICING & BLOCK DIAGRAM

RELOCATED WESTBOUND DMS
MI070W221.9S
SHEET 8 OF 16

STATE OF MISSOURI
CHARLES A. MILLER
NUMBER E-20020006806
REGISTERED PROFESSIONAL ENGINEER

THIS SHEET HAS BEEN SIGNED, SEALED, AND DATED ELECTRONICALLY.

DATE PREPARED	16-NOV-2012
ROUTE	I-70
STATE	MO
DISTRICT	SL
SHEET NO.	29
COUNTY	ST. CHARLES
JOB NO.	J6I2412
CONTRACT ID.	
PROJECT NO.	
BRIDGE NO.	

DESCRIPTION

DATE

MISSOURI HIGHWAYS AND TRANSPORTATION COMMISSION

MoDOT
105 WEST CAPITOL
JEFFERSON CITY, MO 65102
1-888-ASK-MODOT (1-888-275-6636)

HNTB
715 KIRK DRIVE
KANSAS CITY, MO 64105
(816) 472-1201

IF A SEAL IS PRESENT ON THIS SHEET IT HAS BEEN ELECTRONICALLY SEALED AND DATED.

REV.

J6I2412_Splicing_v1.VSD 11/16/2012

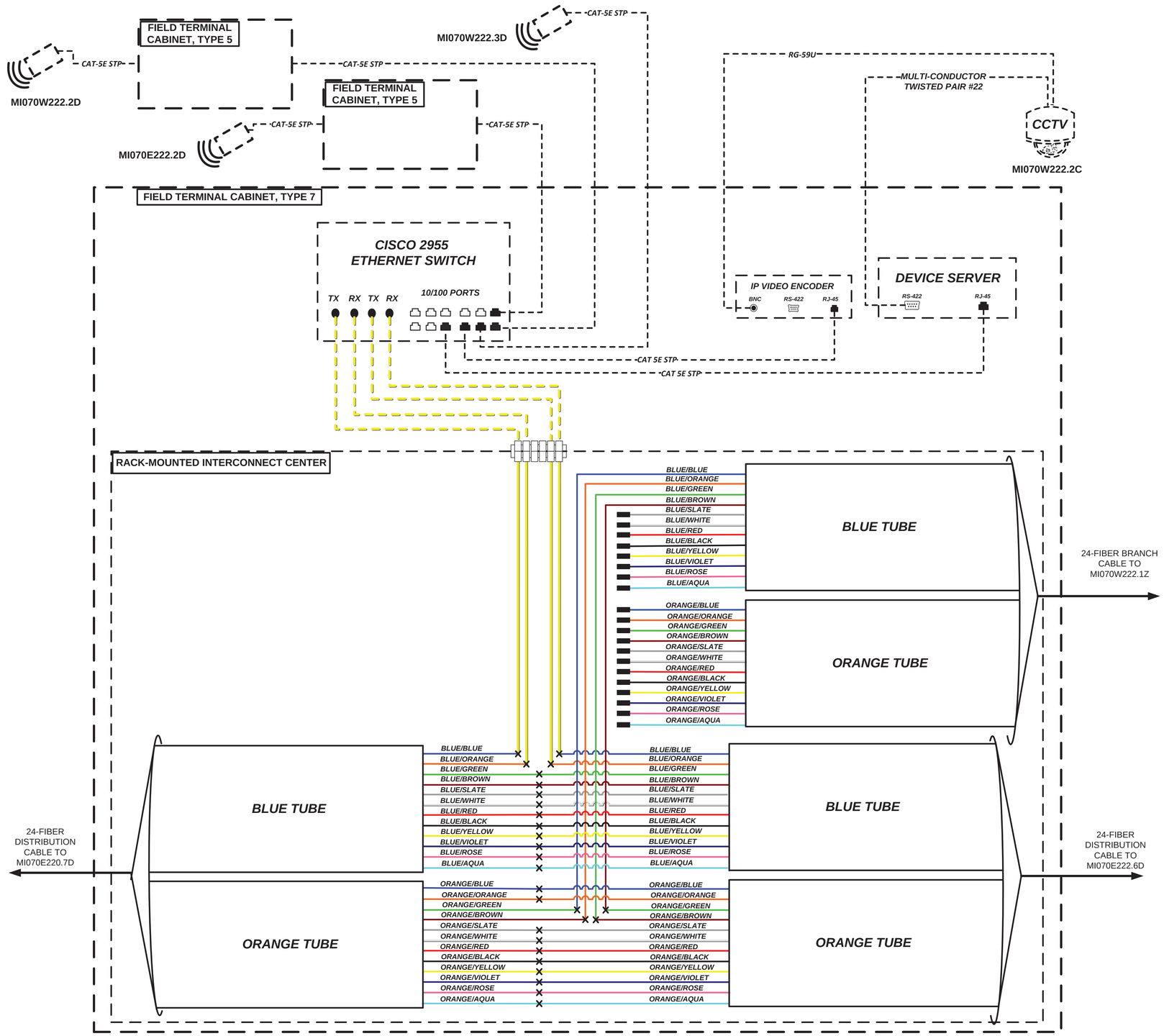

KEY

MI170N123.4C	DEVICE IDENTIFIER
CCTV	CCTV CAMERA
CCTV	EXISTING CCTV CAMERA
DMS	DYNAMIC MESSAGE SIGN
DMS	EXISTING DYNAMIC MESSAGE SIGN
	SM PATCH THROUGH FIBER OPTIC JUMPER
	SM EQUIPMENT CONNECTION FIBER OPTIC JUMPER
	SM FIBER OPTIC PIGTAIL
	MM PATCH THROUGH FIBER OPTIC JUMPER
	MM EQUIPMENT CONNECTION FIBER OPTIC JUMPER
	MM FIBER OPTIC PIGTAIL
	BARE FIBER LEFT COILED IN SPLICE TRAY
	EXISTING/PROPOSED FUSION SPLICE
	PATCH PANEL MODULE
	WIRELESS LINK
VDS AP	SENSYS DETECTION SYSTEM

1. MAXIMUM SPLICE LOSS SHALL BE 0.1 dB
2. NO INTERMEDIATE SPLICES ALLOWED
3. ALL SPLICES SHALL BE FUSION SPLICES
4. DASHED LINES INDICATE EXISTING EQUIPMENT OR CABLING.

VLAN VL015

FIBER SPLICING & BLOCK DIAGRAM

RELOCATED CCTV CAMERA MI070W222.2C SHEET 9 OF 16

STATE OF MISSOURI
CHARLES A. MILLER
NUMBER E-2002000606
REGISTERED PROFESSIONAL ENGINEER

THIS SHEET HAS BEEN SIGNED, SEALED, AND DATED ELECTRONICALLY.

DATE PREPARED	16-NOV-2012
ROUTE	I-70
STATE	MO
DISTRICT	SL
SHEET NO.	30
COUNTY	ST. CHARLES
JOB NO.	J6I2412
CONTRACT ID.	
PROJECT NO.	
BRIDGE NO.	

DESCRIPTION

DATE

IF A SEAL IS PRESENT ON THIS SHEET IT HAS BEEN ELECTRONICALLY SEALED AND DATED.

REV.

MISSOURI HIGHWAYS AND TRANSPORTATION COMMISSION
MoDOT
105 WEST CAPITOL
JEFFERSON CITY, MO 65102
1-888-ASK-MODOT (1-888-275-6636)

HNTB
715 KIRK DRIVE
KANSAS CITY, MO 64105
(816) 472-1201

J6I2412_Splicing_v1.VSD 11/16/2012

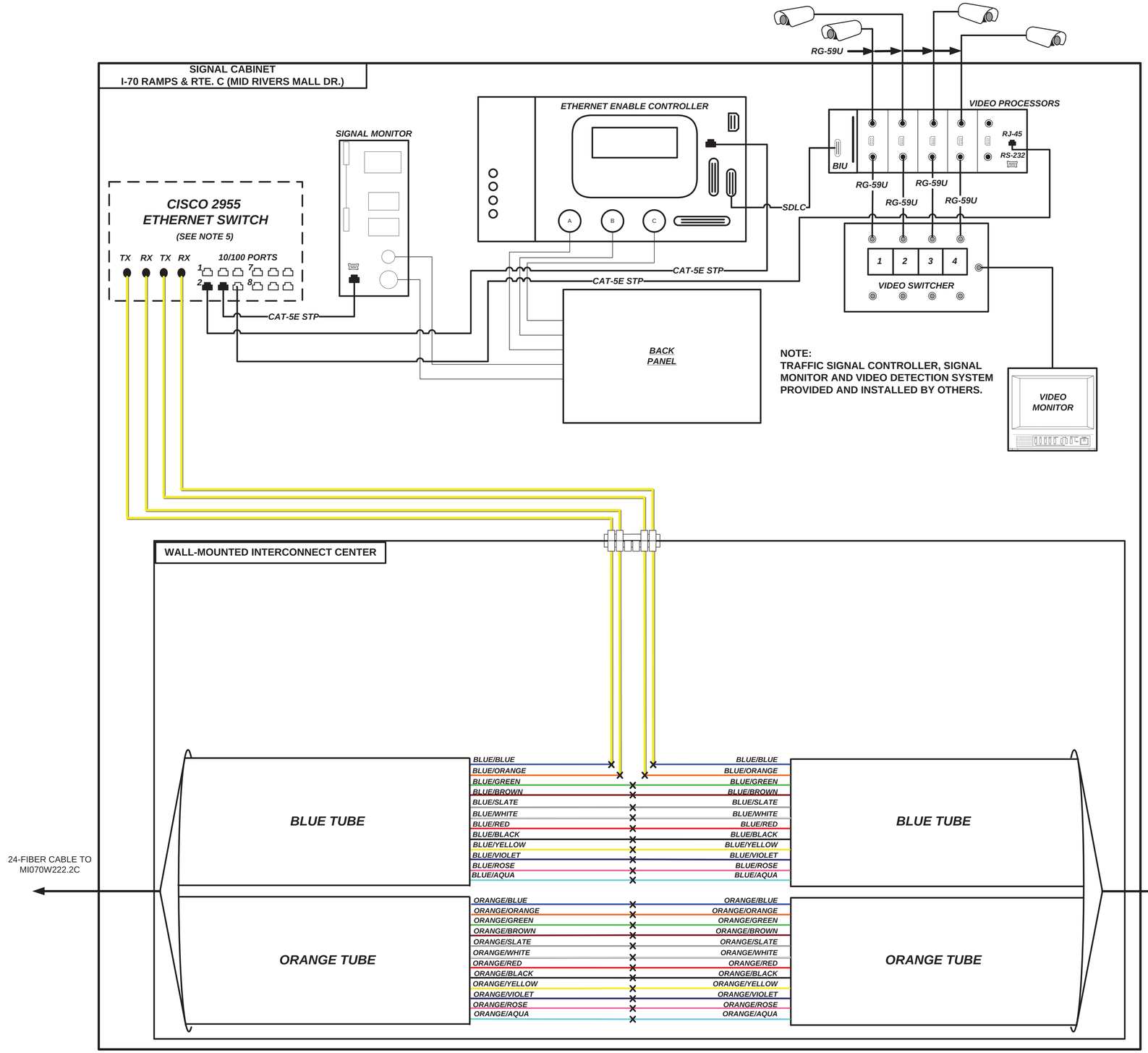

KEY

MI170N123.4C	DEVICE IDENTIFIER
CCTV	CCTV CAMERA
CCTV	EXISTING CCTV CAMERA
DMS	DYNAMIC MESSAGE SIGN
DMS	EXISTING DYNAMIC MESSAGE SIGN
	SM PATCH THROUGH FIBER OPTIC JUMPER
	SM EQUIPMENT CONNECTION FIBER OPTIC JUMPER
	SM FIBER OPTIC PIGTAIL
	MM PATCH THROUGH FIBER OPTIC JUMPER
	MM EQUIPMENT CONNECTION FIBER OPTIC JUMPER
	MM FIBER OPTIC PIGTAIL
	BARE FIBER LEFT COILED IN SPLICE TRAY
	EXISTING/PROPOSED FUSION SPLICE
	PATCH PANEL MODULE
	WIRELESS LINK
VDS AP	SENSYS DETECTION SYSTEM

1. MAXIMUM SPLICE LOSS SHALL BE 0.1 dB
2. NO INTERMEDIATE SPLICES ALLOWED
3. ALL SPLICES SHALL BE FUSION SPLICES
4. DASHED LINES INDICATE EXISTING EQUIPMENT OR CABLING.
5. RELOCATE ETHERNET SWITCH FROM EXISTING SIGNAL CABINET.

VLAN VL225

FIBER SPLICING & BLOCK DIAGRAM I-70 RAMPS & RTE. C (MID RIVERS MALL DR.) MI070W222.1Z SHEET 10 OF 16

STATE OF MISSOURI
CHARLES A. MILLER
NUMBER E-2002000606
REGISTERED PROFESSIONAL ENGINEER

THIS SHEET HAS BEEN SIGNED, SEALED, AND DATED ELECTRONICALLY.

DATE PREPARED	16-NOV-2012
ROUTE	I-70
STATE	MO
DISTRICT	SL
SHEET NO.	31
COUNTY	ST. CHARLES
JOB NO.	J6I2412
CONTRACT ID.	
PROJECT NO.	
BRIDGE NO.	

DESCRIPTION

DATE

MISSOURI HIGHWAYS AND TRANSPORTATION COMMISSION

105 WEST CAPITOL
JEFFERSON CITY, MO 65102
1-888-ASK-MODOT (1-888-275-6636)

HNTB
715 KIRK DRIVE
KANSAS CITY, MO 64105
(816) 472-1201

IF A SEAL IS PRESENT ON THIS SHEET IT HAS BEEN ELECTRONICALLY SEALED AND DATED.

REV.

J6I2412_Splicing_v1.VSD 11/16/2012

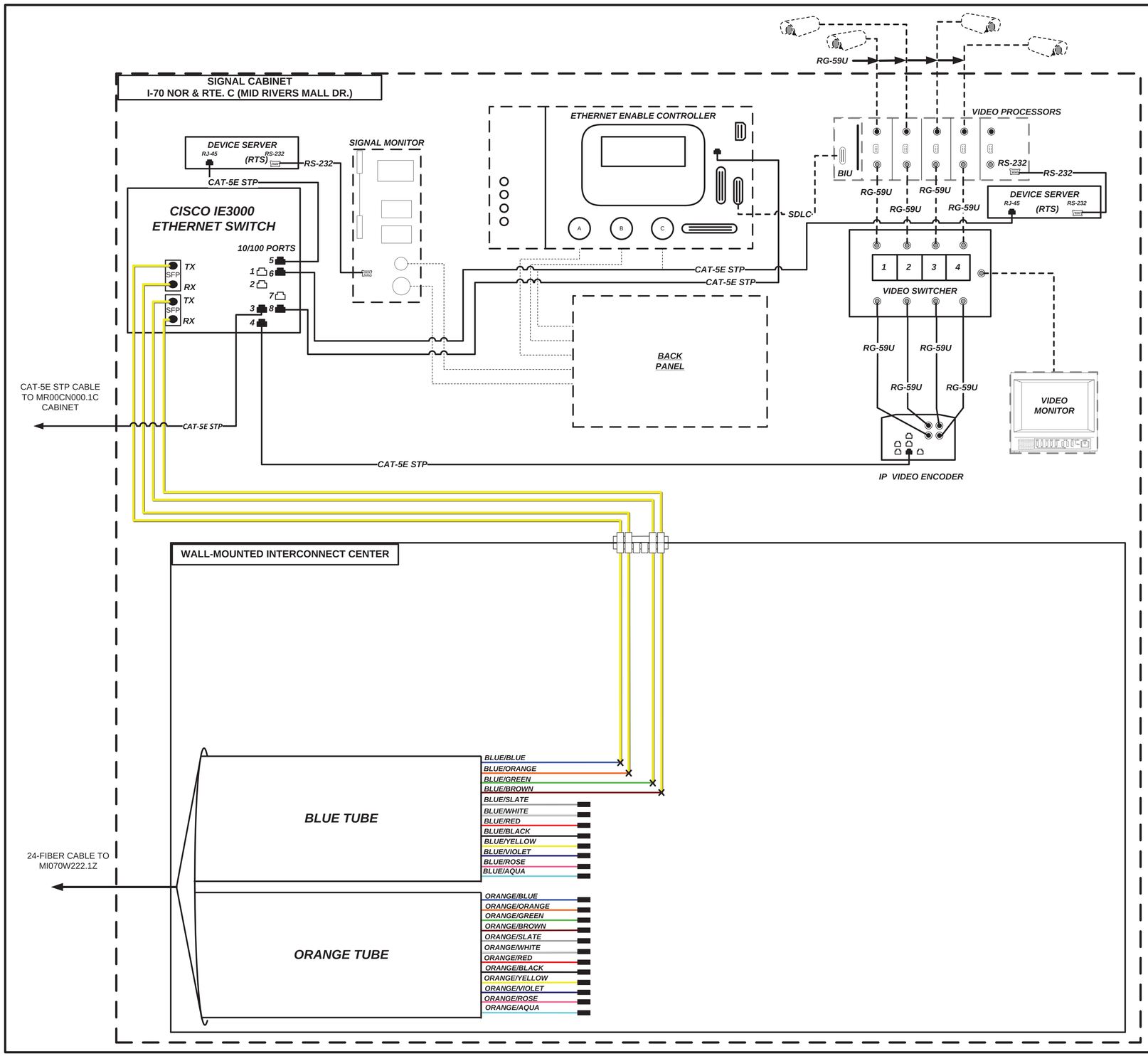

KEY

MI170N123.4C	DEVICE IDENTIFIER
CCTV	CCTV CAMERA
CCTV	EXISTING CCTV CAMERA
DMS	DYNAMIC MESSAGE SIGN
DMS	EXISTING DYNAMIC MESSAGE SIGN
	SM PATCH THROUGH FIBER OPTIC JUMPER
	SM EQUIPMENT CONNECTION FIBER OPTIC JUMPER
	SM FIBER OPTIC PIGTAIL
	MM PATCH THROUGH FIBER OPTIC JUMPER
	MM EQUIPMENT CONNECTION FIBER OPTIC JUMPER
	MM FIBER OPTIC PIGTAIL
	BARE FIBER LEFT COILED IN SPLICE TRAY
	EXISTING/PROPOSED FUSION SPLICE
	PATCH PANEL MODULE
	WIRELESS LINK
VDS AP	SENSYS DETECTION SYSTEM

1. MAXIMUM SPLICE LOSS SHALL BE 0.1 dB
2. NO INTERMEDIATE SPLICES ALLOWED
3. ALL SPLICES SHALL BE FUSION SPLICES
4. DASHED LINES INDICATE EXISTING EQUIPMENT OR CABLING.

VLAN
VL225

FIBER SPLICING & BLOCK DIAGRAM
I-70 NOR &
RTE. C (MID RIVERS MALL DR.)
MR00CN000.1Z
SHEET 11 OF 16

STATE OF MISSOURI
CHARLES A. MILLER
NUMBER E-2002000606
REGISTERED PROFESSIONAL ENGINEER

THIS SHEET HAS BEEN SIGNED, SEALED, AND DATED ELECTRONICALLY.

DATE PREPARED	16-NOV-2012
ROUTE	I-70
STATE	MO
DISTRICT	SL
SHEET NO.	32
COUNTY	ST. CHARLES
JOB NO.	J6I2412
CONTRACT ID.	
PROJECT NO.	
BRIDGE NO.	

DESCRIPTION
DATE

IF A SEAL IS PRESENT ON THIS SHEET IT HAS BEEN ELECTRONICALLY SEALED AND DATED.

MISSOURI HIGHWAYS AND TRANSPORTATION COMMISSION
105 WEST CAPITOL
JEFFERSON CITY, MO 65102
1-888-ASK-MODOT (1-888-275-6636)

HNTB
715 KIRK DRIVE
KANSAS CITY, MO 64105
(816) 472-1201

REV.

J6I2412_Splicing_v1.VSD 11/16/2012

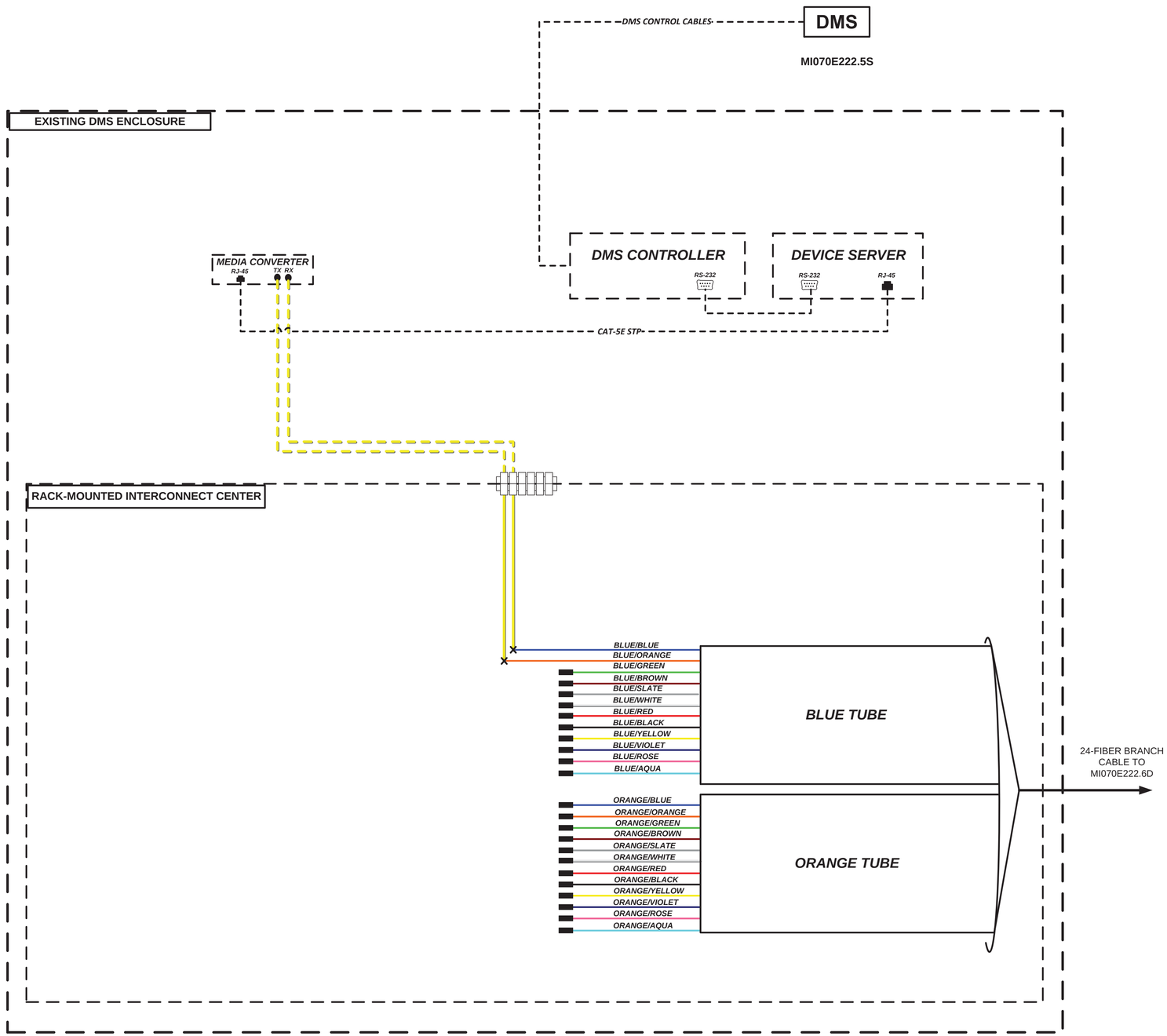

KEY

MI170N123.4C	DEVICE IDENTIFIER
CCTV	CCTV CAMERA
CCTV	EXISTING CCTV CAMERA
DMS	DYNAMIC MESSAGE SIGN
DMS	EXISTING DYNAMIC MESSAGE SIGN
	SM PATCH THROUGH FIBER OPTIC JUMPER
	SM EQUIPMENT CONNECTION FIBER OPTIC JUMPER
	SM FIBER OPTIC PIGTAIL
	MM PATCH THROUGH FIBER OPTIC JUMPER
	MM EQUIPMENT CONNECTION FIBER OPTIC JUMPER
	MM FIBER OPTIC PIGTAIL
	BARE FIBER LEFT COILED IN SPLICE TRAY
	EXISTING/PROPOSED FUSION SPLICE
	PATCH PANEL MODULE
	WIRELESS LINK
VDS AP	SENSYS DETECTION SYSTEM

1. MAXIMUM SPLICE LOSS SHALL BE 0.1 dB
2. NO INTERMEDIATE SPLICES ALLOWED
3. ALL SPLICES SHALL BE FUSION SPLICES
4. DASHED LINES INDICATE EXISTING EQUIPMENT OR CABLING.

VLAN
VL098

FIBER SPLICING & BLOCK DIAGRAM

RELOCATED EASTBOUND DMS MI070E222.5S SHEET 12 OF 16

STATE OF MISSOURI
CHARLES A. MILLER
NUMBER E-2002000606
REGISTERED PROFESSIONAL ENGINEER

THIS SHEET HAS BEEN SIGNED, SEALED, AND DATED ELECTRONICALLY.

DATE PREPARED	16-NOV-2012
ROUTE	I-70
STATE	MO
DISTRICT	SL
SHEET NO.	33
COUNTY	ST. CHARLES
JOB NO.	J6I2412
CONTRACT ID.	
PROJECT NO.	
BRIDGE NO.	

DESCRIPTION

DATE

MISSOURI HIGHWAYS AND TRANSPORTATION COMMISSION

105 WEST CAPITOL
JEFFERSON CITY, MO 65102
1-888-ASK-MODOT (1-888-275-6636)

HNTB
715 KIRK DRIVE
KANSAS CITY, MO 64105
(816) 472-1201

IF A SEAL IS PRESENT ON THIS SHEET IT HAS BEEN ELECTRONICALLY SEALED AND DATED.

REV.

J6I2412_Splicing_v1.VSD 11/16/2012

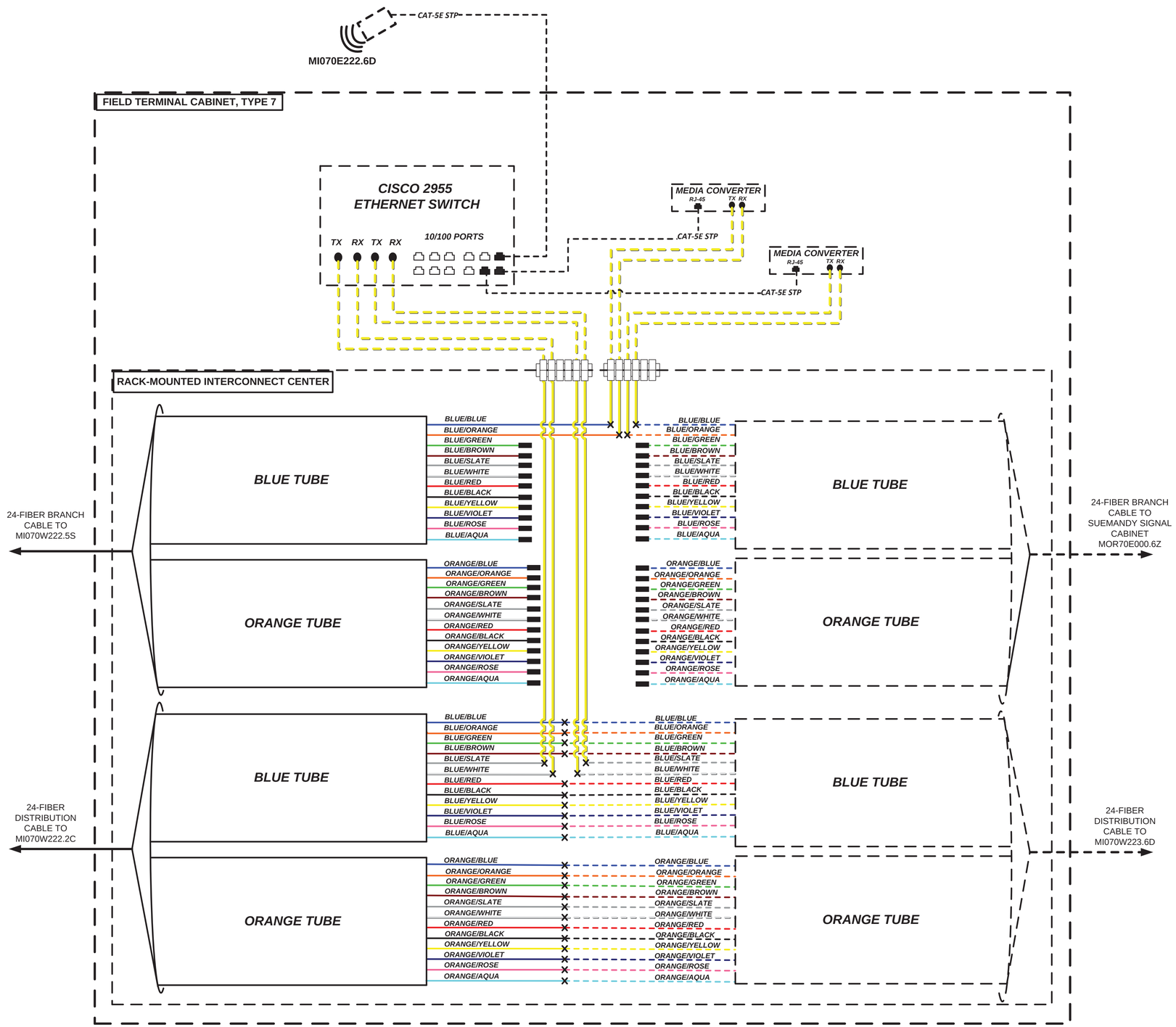

KEY

MI170N123.4C	DEVICE IDENTIFIER
CCTV	CCTV CAMERA
CCTV	EXISTING CCTV CAMERA
DMS	DYNAMIC MESSAGE SIGN
DMS	EXISTING DYNAMIC MESSAGE SIGN
	SM PATCH THROUGH FIBER OPTIC JUMPER
	SM EQUIPMENT CONNECTION FIBER OPTIC JUMPER
	SM FIBER OPTIC PIGTAIL
	MM PATCH THROUGH FIBER OPTIC JUMPER
	MM EQUIPMENT CONNECTION FIBER OPTIC JUMPER
	MM FIBER OPTIC PIGTAIL
	BARE FIBER LEFT COILED IN SPLICE TRAY
	EXISTING/PROPOSED FUSION SPLICE
	PATCH PANEL MODULE
	WIRELESS LINK
VDS AP	SENSYS DETECTION SYSTEM

1. MAXIMUM SPLICE LOSS SHALL BE 0.1 dB
2. NO INTERMEDIATE SPLICES ALLOWED
3. ALL SPLICES SHALL BE FUSION SPLICES
4. DASHED LINES INDICATE EXISTING EQUIPMENT OR CABLING.

VLAN
VL098

FIBER SPLICING & BLOCK DIAGRAM

RELOCATED RADAR DETECTOR
MI070E222.6D
SHEET 13 OF 16

STATE OF MISSOURI
CHARLES A. MILLER
NUMBER E-2002000606
REGISTERED PROFESSIONAL ENGINEER

THIS SHEET HAS BEEN SIGNED, SEALED, AND DATED ELECTRONICALLY.

DATE PREPARED	16-NOV-2012
ROUTE	I-70
STATE	MO
DISTRICT	SL
SHEET NO.	34
COUNTY	ST. CHARLES
JOB NO.	J6I2412
CONTRACT ID.	
PROJECT NO.	
BRIDGE NO.	

DESCRIPTION | DATE

MISSOURI HIGHWAYS AND TRANSPORTATION COMMISSION
105 WEST CAPITOL
JEFFERSON CITY, MO 65102
1-888-ASK-MODOT (1-888-275-6636)

HNTB
715 KIRK DRIVE
KANSAS CITY, MO 64105
(816) 472-1201

IF A SEAL IS PRESENT ON THIS SHEET IT HAS BEEN ELECTRONICALLY SEALED AND DATED.

REV.

J6I2412_Splicing_v1.VSD 11/16/2012

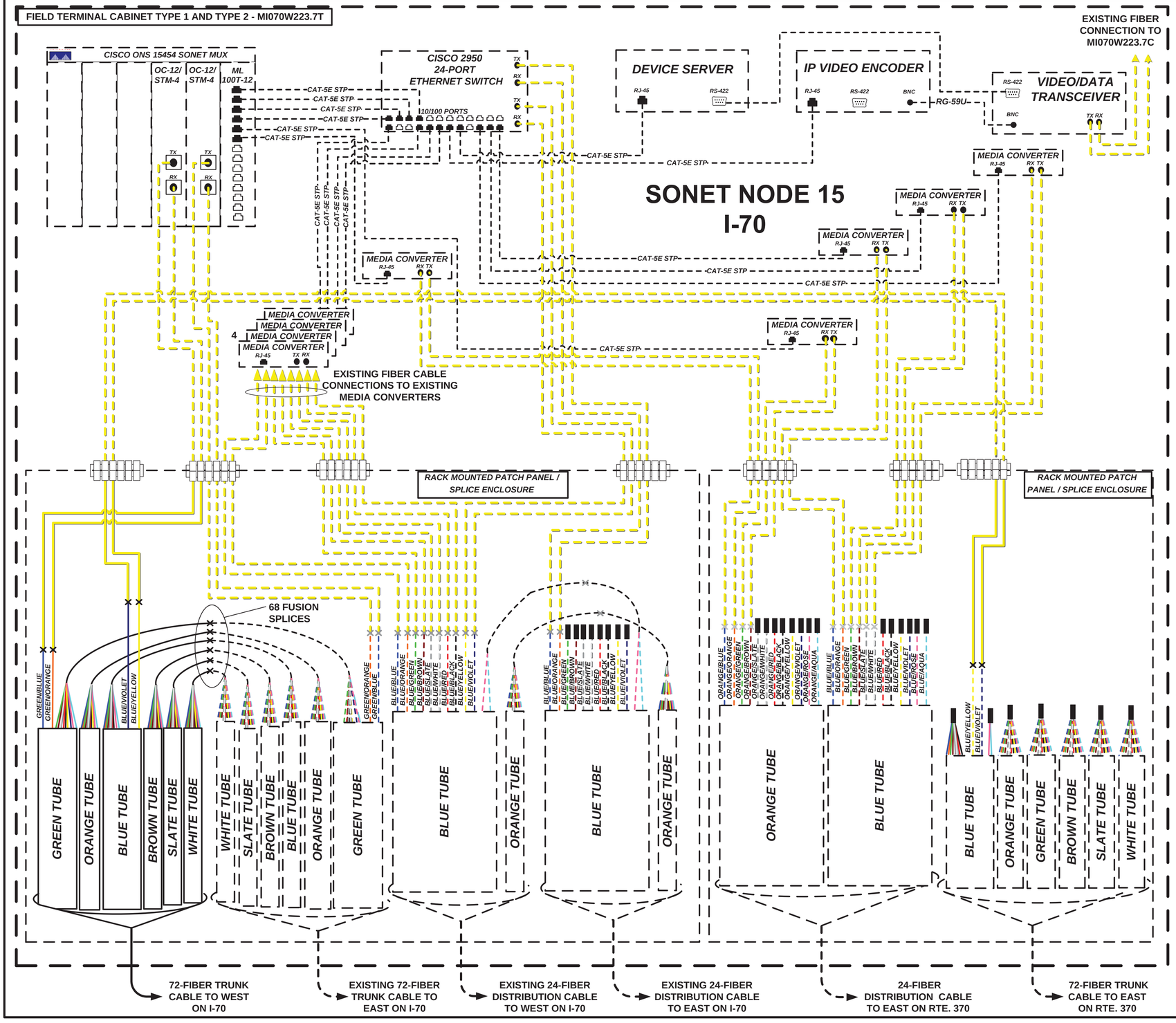

KEY

MI170N123.4C	DEVICE IDENTIFIER
CCTV	CCTV CAMERA
CCTV	EXISTING CCTV CAMERA
DMS	DYNAMIC MESSAGE SIGN
DMS	EXISTING DYNAMIC MESSAGE SIGN
	SM PATCH THROUGH FIBER OPTIC JUMPER
	SM EQUIPMENT CONNECTION FIBER OPTIC JUMPER
	SM FIBER OPTIC PIGTAIL
	MM PATCH THROUGH FIBER OPTIC JUMPER
	MM EQUIPMENT CONNECTION FIBER OPTIC JUMPER
	MM FIBER OPTIC PIGTAIL
	BARE FIBER LEFT COILED IN SPLICE TRAY
	EXISTING/PROPOSED FUSION SPLICE
	PATCH PANEL MODULE
	WIRELESS LINK
VDS AP	SENSYS DETECTION SYSTEM

1. MAXIMUM SPLICE LOSS SHALL BE 0.1 dB
2. NO INTERMEDIATE SPLICES ALLOWED
3. ALL SPLICES SHALL BE FUSION SPLICES
4. DASHED LINES INDICATE EXISTING EQUIPMENT OR CABLING.

NODE 15
I-70/RTE. 370

FIBER SPLICING & BLOCK DIAGRAM
MI070W223.7T
NODE 15
I-70 / ROUTE 370
SHEET 14 OF 16

HNTB
715 KIRK DRIVE
KANSAS CITY, MO 64105
(816) 472-1201

STATE OF MISSOURI
CHARLES A. MILLER
NUMBER E-2002000606
REGISTERED PROFESSIONAL ENGINEER

THIS SHEET HAS BEEN SIGNED, SEALED, AND DATED ELECTRONICALLY.

DATE PREPARED	16-NOV-2012
ROUTE	I-70
STATE	MO
DISTRICT	SL
SHEET NO.	35
COUNTY	ST. CHARLES
JOB NO.	J6I2412
CONTRACT ID.	
PROJECT NO.	
BRIDGE NO.	

DESCRIPTION
DATE

MISSOURI HIGHWAYS AND TRANSPORTATION COMMISSION
105 WEST CAPITOL
JEFFERSON CITY, MO 65102
1-888-ASK-MODOT (1-888-275-6636)

IF A SEAL IS PRESENT ON THIS SHEET IT HAS BEEN ELECTRONICALLY SEALED AND DATED.

REV.

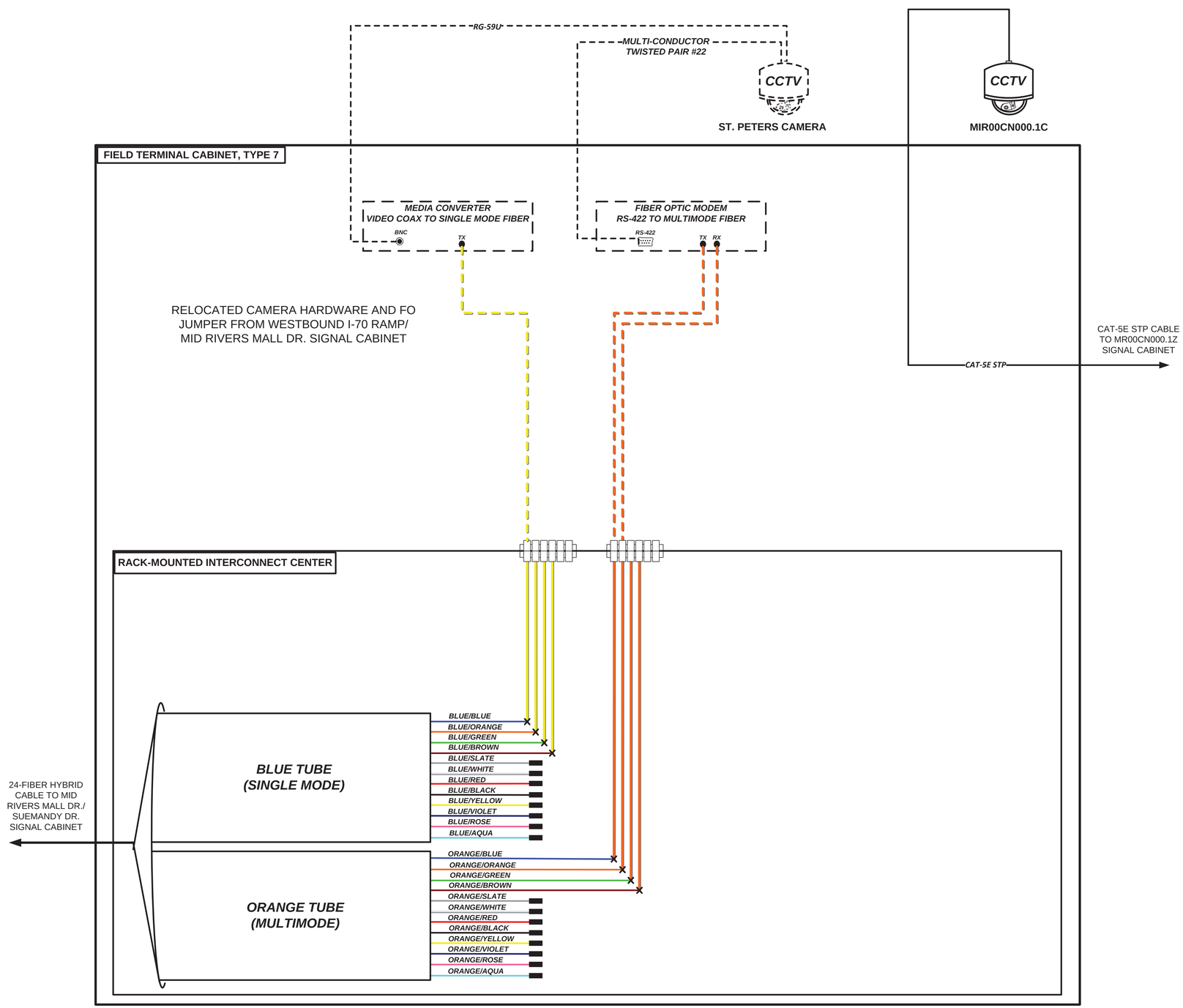

KEY

MI170N123.4C	DEVICE IDENTIFIER
CCTV	CCTV CAMERA
CCTV	EXISTING CCTV CAMERA
DMS	DYNAMIC MESSAGE SIGN
DMS	EXISTING DYNAMIC MESSAGE SIGN
	SM PATCH THROUGH FIBER OPTIC JUMPER
	SM EQUIPMENT CONNECTION FIBER OPTIC JUMPER
	SM FIBER OPTIC PIGTAIL
	MM PATCH THROUGH FIBER OPTIC JUMPER
	MM EQUIPMENT CONNECTION FIBER OPTIC JUMPER
	MM FIBER OPTIC PIGTAIL
	BARE FIBER LEFT COILED IN SPLICE TRAY
	EXISTING/PROPOSED FUSION SPLICE
	PATCH PANEL MODULE
	WIRELESS LINK
VDS AP	SENSYS DETECTION SYSTEM

1. MAXIMUM SPLICE LOSS SHALL BE 0.1 dB
2. NO INTERMEDIATE SPLICES ALLOWED
3. ALL SPLICES SHALL BE FUSION SPLICES
4. DASHED LINES INDICATE EXISTING EQUIPMENT OR CABLING.

FIBER SPLICING & BLOCK DIAGRAM

ARTERIAL CCTV CAMERAS
MR00CN000.1C
SHEET 15 OF 16

STATE OF MISSOURI
CHARLES A. MILLER
NUMBER E-2002000606
REGISTERED PROFESSIONAL ENGINEER

THIS SHEET HAS BEEN SIGNED, SEALED, AND DATED ELECTRONICALLY.

DATE PREPARED	16-NOV-2012
ROUTE	I-70
STATE	MO
DISTRICT	SL
SHEET NO.	36
COUNTY	ST. CHARLES
JOB NO.	J6I2412
CONTRACT ID.	
PROJECT NO.	
BRIDGE NO.	

DESCRIPTION | DATE

MISSOURI HIGHWAYS AND TRANSPORTATION COMMISSION
105 WEST CAPITOL
JEFFERSON CITY, MO 65102
1-888-ASK-MODOT (1-888-275-6636)

HNTB
715 KIRK DRIVE
KANSAS CITY, MO 64105
(816) 472-1201

IF A SEAL IS PRESENT ON THIS SHEET IT HAS BEEN ELECTRONICALLY SEALED AND DATED.

REV.

J6I2412_Splicing_v1.VSD 11/16/2012

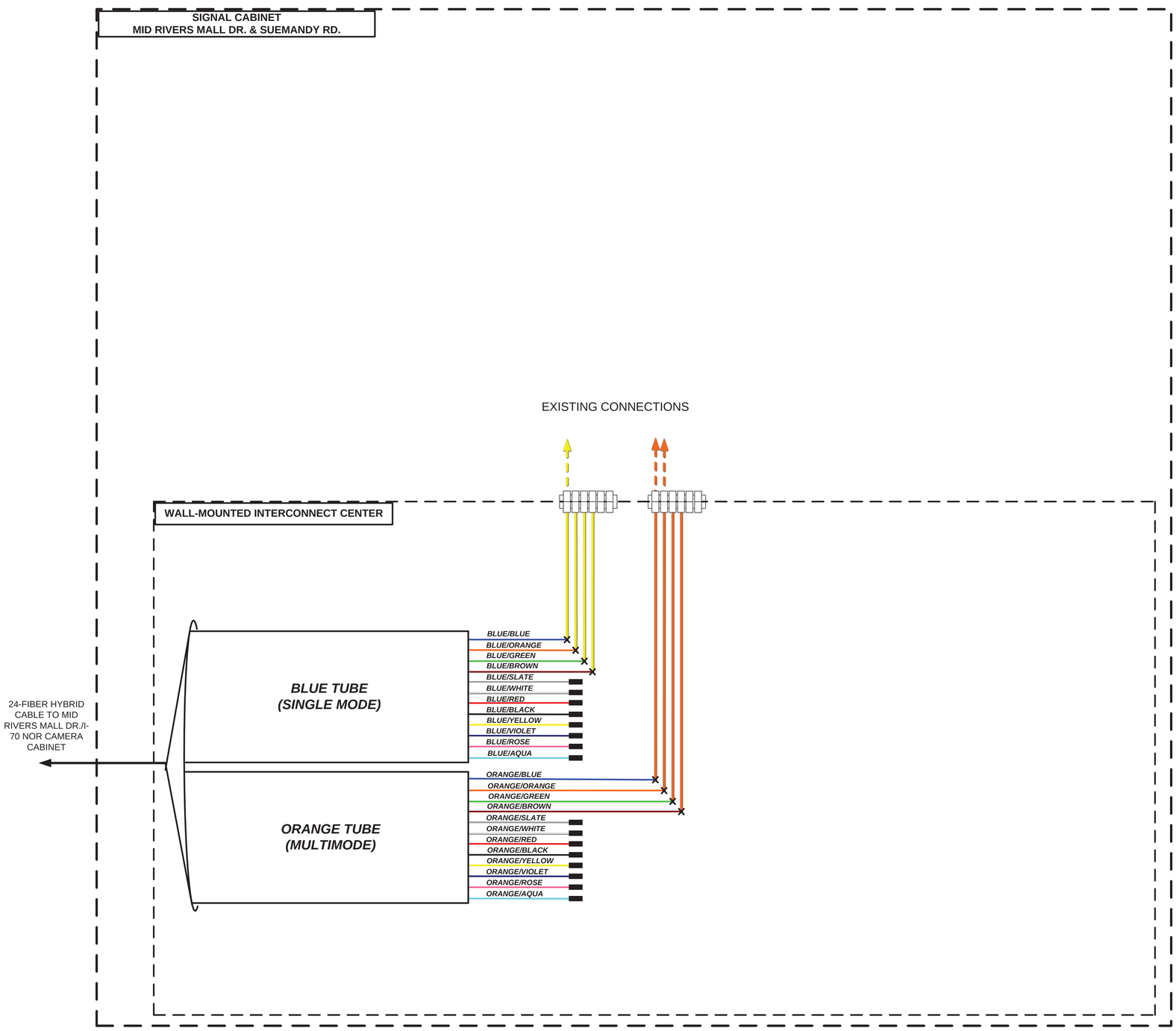

KEY

MI170N123.4C	DEVICE IDENTIFIER
CCTV	CCTV CAMERA
CCTV	EXISTING CCTV CAMERA
DMS	DYNAMIC MESSAGE SIGN
DMS	EXISTING DYNAMIC MESSAGE SIGN
	SM PATCH THROUGH FIBER OPTIC JUMPER
	SM EQUIPMENT CONNECTION FIBER OPTIC JUMPER
	SM FIBER OPTIC PIGTAIL
	MM PATCH THROUGH FIBER OPTIC JUMPER
	MM EQUIPMENT CONNECTION FIBER OPTIC JUMPER
	MM FIBER OPTIC PIGTAIL
	BARE FIBER LEFT COILED IN SPLICE TRAY
	EXISTING/PROPOSED FUSION SPLICE
	PATCH PANEL MODULE
	WIRELESS LINK
VDS AP	SENSYS DETECTION SYSTEM

1. MAXIMUM SPLICE LOSS SHALL BE 0.1 dB
2. NO INTERMEDIATE SPLICES ALLOWED
3. ALL SPLICES SHALL BE FUSION SPLICES
4. DASHED LINES INDICATE EXISTING EQUIPMENT OR CABLING.

FIBER SPLICING & BLOCK DIAGRAM
MID RIVERS MALL DR. & SUEMANDY RD.
EXISTING SIGNAL CABEINT
SHEET 16 OF 16

STATE OF MISSOURI
CHARLES A. MILLER
NUMBER E-2002000606
REGISTERED PROFESSIONAL ENGINEER

THIS SHEET HAS BEEN SIGNED, SEALED, AND DATED ELECTRONICALLY.

DATE PREPARED	16-NOV-2012
ROUTE	I-70
STATE	MO
DISTRICT	SL
SHEET NO.	37
COUNTY	ST. CHARLES
JOB NO.	J6I2412
CONTRACT ID.	
PROJECT NO.	
BRIDGE NO.	

DESCRIPTION
DATE

IF A SEAL IS PRESENT ON THIS SHEET IT HAS BEEN ELECTRONICALLY SEALED AND DATED.

MISSOURI HIGHWAYS AND TRANSPORTATION COMMISSION
105 WEST CAPITOL
JEFFERSON CITY, MO 65102
1-888-ASK-MODOT (1-888-275-6636)

HNTB
715 KIRK DRIVE
KANSAS CITY, MO 64105
(816) 472-1201

REV.

J6I2412_Splicing_v1.VSD 11/16/2012

RELOCATED EB DMS
MI070E222.5S
52+00 RSOR

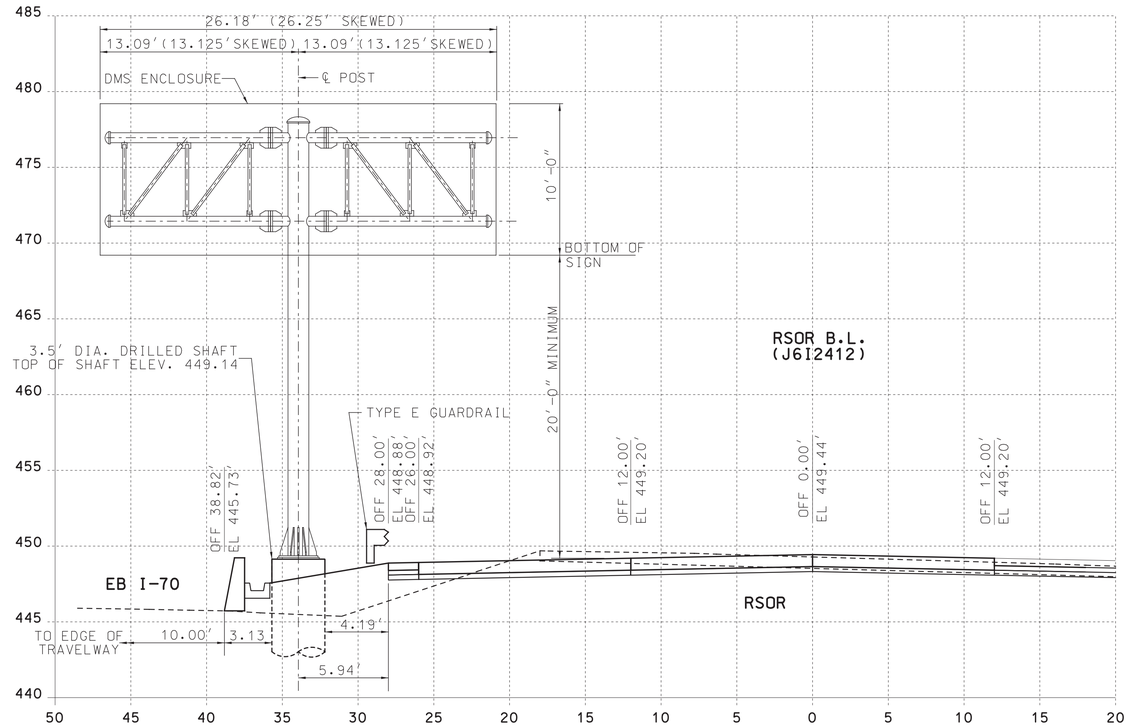

RELOCATED WB DMS
MI070W221.9S
969+65.00

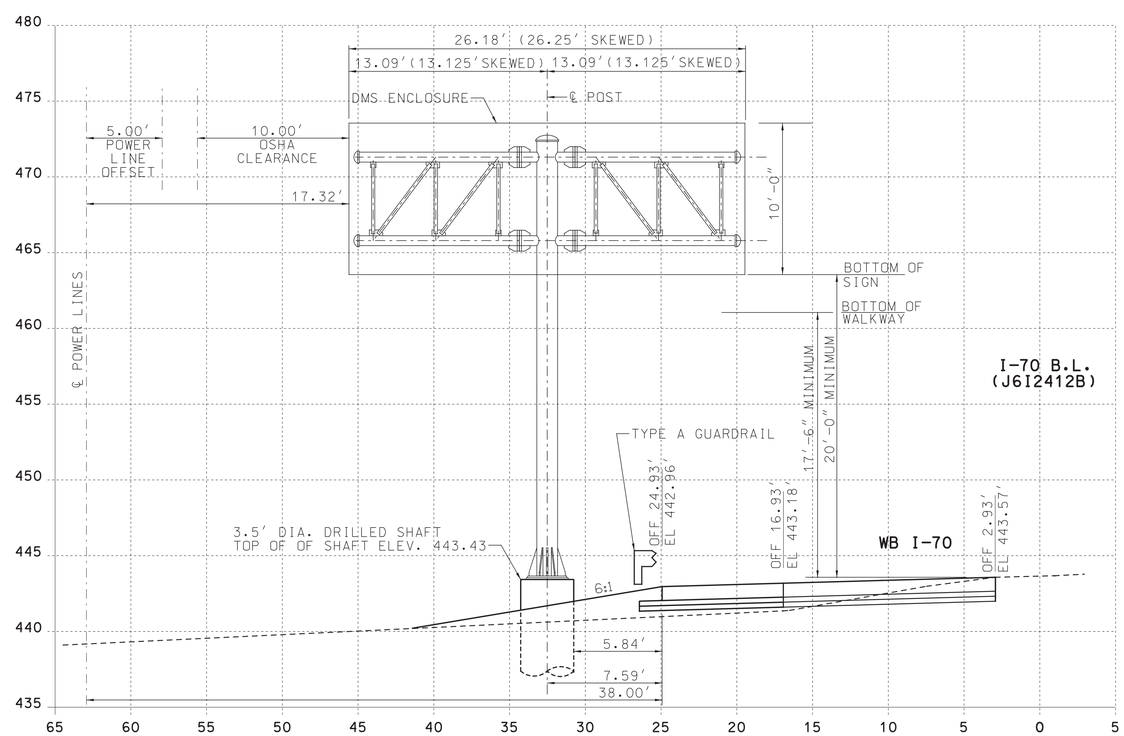

ITS DETAIL
DMS CROSS SECTIONS
SHEET 1 OF 12

STATE OF MISSOURI
CHARLES A. MILLER
NUMBER E-2002000606
REGISTERED PROFESSIONAL ENGINEER

THIS SHEET HAS BEEN SIGNED, SEALED, AND DATED ELECTRONICALLY.

DATE PREPARED	16-NOV-2012
ROUTE	I-70
STATE	MO
DISTRICT	SL
SHEET NO.	38
COUNTY	ST. CHARLES
JOB NO.	J6I2412
CONTRACT ID.	
PROJECT NO.	
BRIDGE NO.	

DATE	DESCRIPTION

MISSOURI HIGHWAYS AND TRANSPORTATION COMMISSION
105 WEST CAPITOL
JEFFERSON CITY, MO 65102
1-888-ASK-MODOT (1-888-275-6636)

HNTB
715 KIRK DRIVE
KANSAS CITY, MO 64105
(816) 472-1201

IF A SEAL IS PRESENT ON THIS SHEET IT HAS BEEN ELECTRONICALLY SEALED AND DATED.

REV.

\\kcow00\jobs4\50299\DS005\ITS\Drawings\CD\Plans\038_DTL1_J6I2412_i5.dgn 10:08 AM 16-NOV-2012

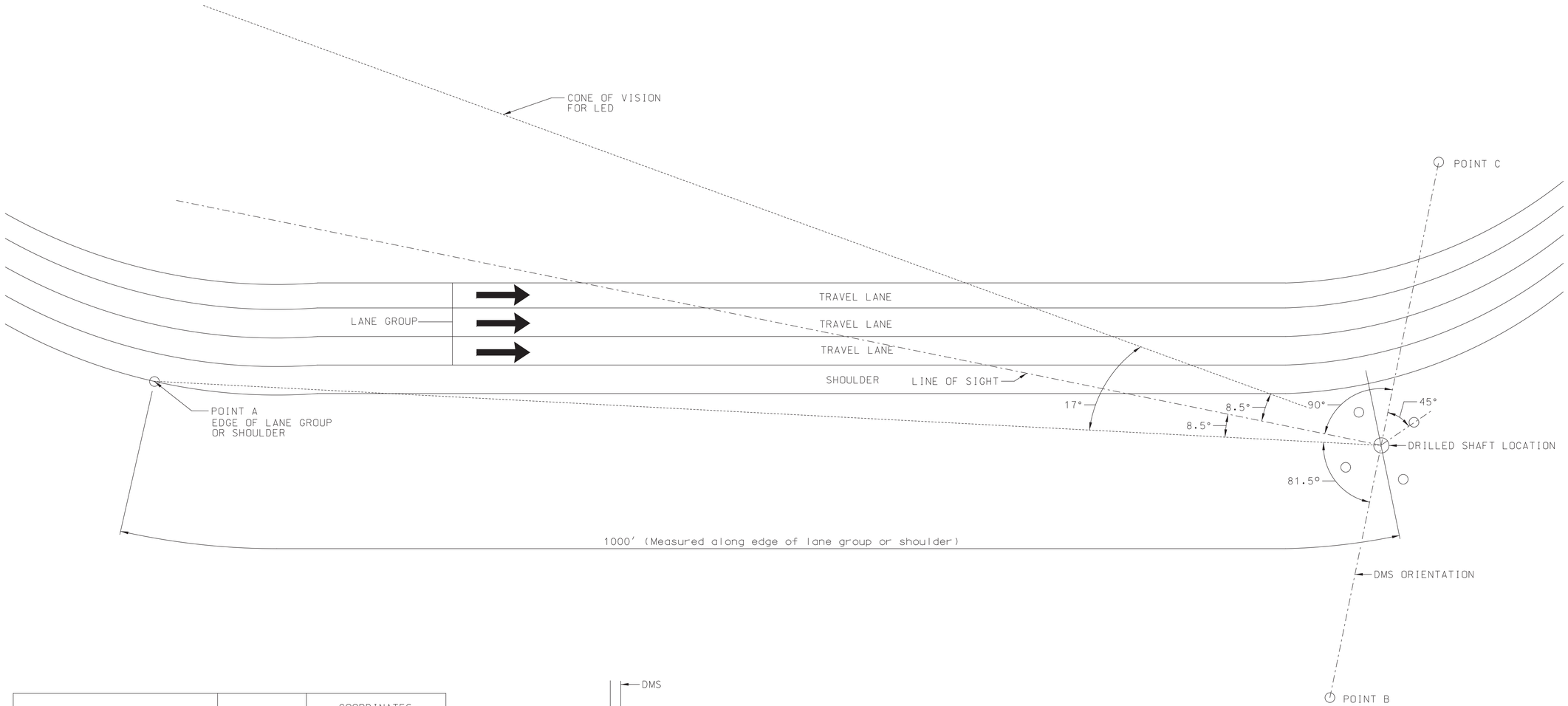

LOCATION	STRUCTURE DESIGNATION	COORDINATES	
		NORTHING	EASTING
WEST OF MID-RIVERS MALL DRIVE	MI070W221.9S	1080438.97	783935.97
EAST OF MID-RIVERS MALL DRIVE	MI070E222.5S	1079996.42	787010.78

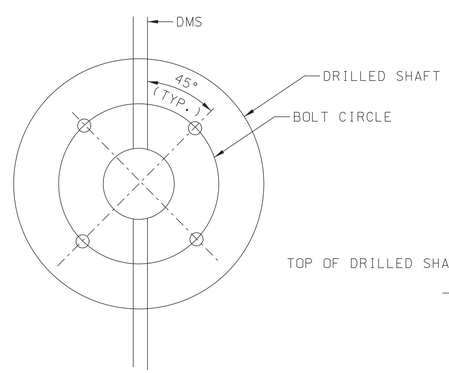

BOLT CIRCLE

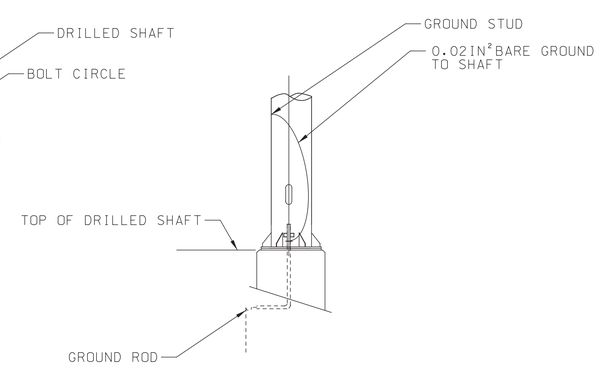

GROUNDING DETAIL

BOLT CIRCLE ORIENTATION PROCEDURE

1. LOCATE THE EDGE OF THE LANE GROUP OR SHOULDER (POINT A) FOR THE RESPECTIVE DMS LOCATION.
2. SET UP INSTRUMENT ON THE DMS LOCATION BASED UPON THE COORDINATES IN THE TABLE.
3. SIGHT ON POINT A, TURN 81.5° LEFT AND LOCATE POINT B.
4. SIGHT POINT B, THEN TURN 180 DEGREES AND SET POINT C.

ITS DETAIL
DMS BOLT CIRCLE
ORIENTATION DETAIL
SHEET 2 OF 12

STATE OF MISSOURI
CHARLES A. MILLER
NUMBER E-2002000606
REGISTERED PROFESSIONAL ENGINEER

THIS SHEET HAS BEEN SIGNED, SEALED, AND DATED ELECTRONICALLY.

DATE PREPARED	
16-NOV-2012	
ROUTE: I-70	STATE: MO
DISTRICT: SL	SHEET NO.: 39
COUNTY: ST. CHARLES	
JOB NO.: J6I2412	
CONTRACT ID.	
PROJECT NO.	
BRIDGE NO.	

DATE	DESCRIPTION

MISSOURI HIGHWAYS AND TRANSPORTATION COMMISSION
105 WEST CAPITOL
JEFFERSON CITY, MO 65102
1-888-ASK-MODOT (1-888-275-6636)

HNTB
715 KIRK DRIVE
KANSAS CITY, MO 64105
(816) 472-1201

IF A SEAL IS PRESENT ON THIS SHEET IT HAS BEEN ELECTRONICALLY SEALED AND DATED.

REV.

DMS SUPPORT STRUCTURES (INFORMATION ONLY)							
DMS SUPPORT		STEEL TRUSS				STEEL POST	
STRUCTURE DESIGNATION	LOCATION	CHORDS OD x THICK (IN)	STRUTS OD x THICK (IN)	STUBS OD x THICK (IN)	CAMBER (IN)	H (FT)	SIZE OD x THICK (IN)
MI070W221.9S	WEST OF MID-RIVERS MALL DRIVE	$8\frac{5}{8}$ X $\frac{1}{2}$	$2\frac{7}{8}$ X $\frac{1}{4}$	$8\frac{5}{8}$ X $\frac{1}{2}$	0	29'-0"	18 X $\frac{3}{4}$
MI070E222.5S	EAST OF MID-RIVERS MALL DRIVE	$8\frac{5}{8}$ X $\frac{1}{2}$	$2\frac{7}{8}$ X $\frac{1}{4}$	$8\frac{5}{8}$ X $\frac{5}{8}$	0	28'-10$\frac{1}{2}$"	18 X $\frac{3}{4}$

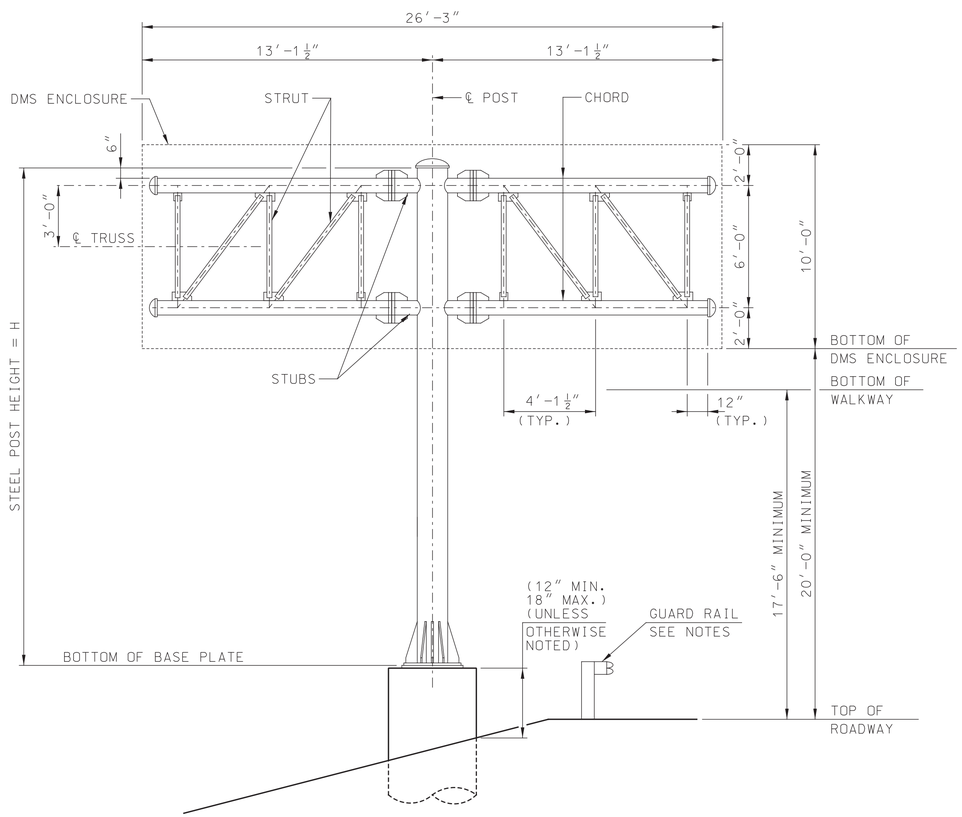

TYPICAL DMS SUPPORT STRUCTURE ELEVATION

NOTES:

1. DMS STRUCTURE DETAIL PROVIDED FOR INFORMATION ONLY.
2. MINIMUM CLEARANCES SHOWN MUST BE MET. MEASURE EXISTING STRUCUTURES TO CONFIRM THE DRILL SHAFT ELEVATIONS PROVIDED WILL RESULT IN MINIMUM CLEARANCES BEING MET.

ITS DETAIL
DMS TYPICAL
STRUCTURE DETAIL
SHEET 3 OF 12

STATE OF MISSOURI
CHARLES A. MILLER
NUMBER E-2002000606
REGISTERED PROFESSIONAL ENGINEER

THIS SHEET HAS BEEN SIGNED, SEALED, AND DATED ELECTRONICALLY.

DATE PREPARED 16-NOV-2012

ROUTE	STATE
I-70	MO
DISTRICT	SHEET NO.
SL	40

COUNTY ST. CHARLES
JOB NO. J6I2412
CONTRACT ID.
PROJECT NO.
BRIDGE NO.

DATE	DESCRIPTION

MISSOURI HIGHWAYS AND TRANSPORTATION COMMISSION
105 WEST CAPITOL
JEFFERSON CITY, MO 65102
1-888-ASK-MODOT (1-888-275-6636)

HNTB
715 KIRK DRIVE
KANSAS CITY, MO 64105
(816) 472-1201

IF A SEAL IS PRESENT ON THIS SHEET IT HAS BEEN ELECTRONICALLY SEALED AND DATED.

REV.

\\kcow00\jobs4\50299\DS005\ITS\Drawings\CD\Plans\040_DTL3_J6I2412_i1.dgn 10:51 AM 16-NOV-2012

SCHEDULE OF DRILLED SHAFT FOUNDATIONS

STRUCTURE DESIGNATION	LOCATION	TOP OF SHAFT EL. A	SHAFT DIA. D	DRILLED SHAFT LENGTH	ROCK SOCKET LENGTH	REINFORCEMENT				
						TYPE "C-1"		✳TYPE "C-2"		
						NO. & SIZE	LENGTH	NO. & SIZE	RD	LENGTH
MI070W221.9S	WEST OF MID-RIVERS MALL DRIVE	443.43	3'-6"	29'-0"	NOTE 10	14-#9	28'-6"	1-#4	3'-0"	293'-1"
MI070E222.5S	EAST OF MID-RIVERS MALL DRIVE	449.14	3'-6"	29'-0"	NOTE 10	14-#9	28'-6"	1-#4	3'-0"	293'-1"

✳ FOUR ANGLE OR CHANNEL SPACERS ARE REQUIRED FOR EACH SPIRAL. SPACERS ARE TO BE PLACED ON INSIDE OF SPIRALS. LENGTH AND WEIGHT OF SPIRALS DO NOT INCLUDE SPLICES OR SPACERS.

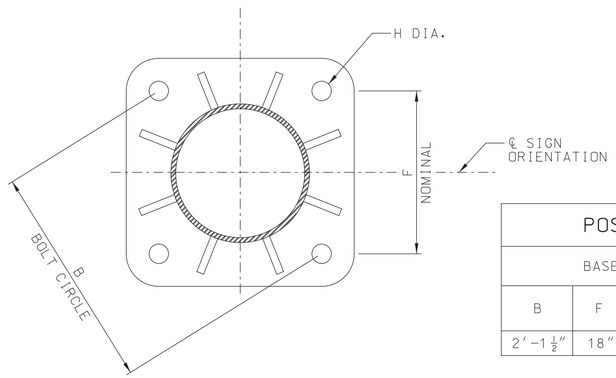

POST BASE PLATE PLAN

POST BASE PLATE ASSEMBLY						
BASE PLATE				ANCHOR BOLTS		
B	F	H	T	P	SIZE DIA. × LENGTH	E
2'-1 1/2"	18"	3 5/16"	3"	7"	3" × 10'-0"	12"

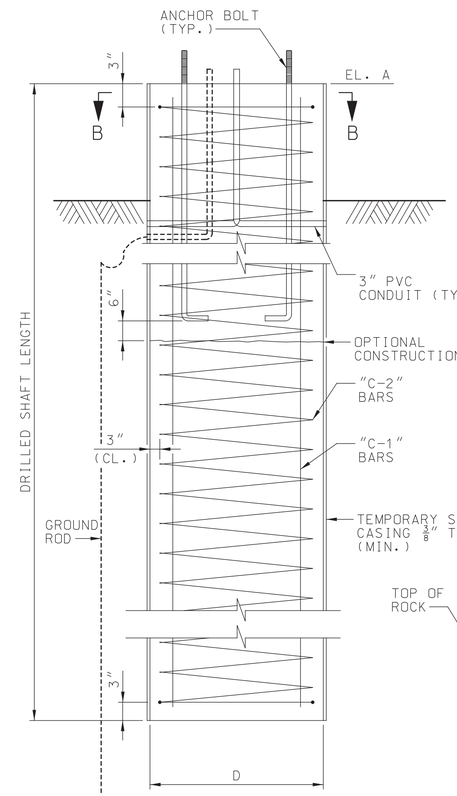

TYPICAL DRILLED SHAFT DETAIL

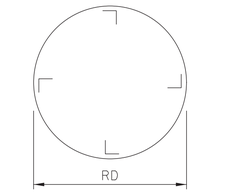

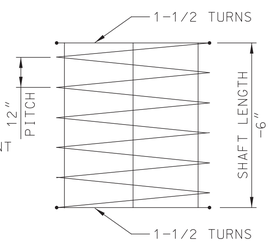

TYPE "C-2" DETAIL

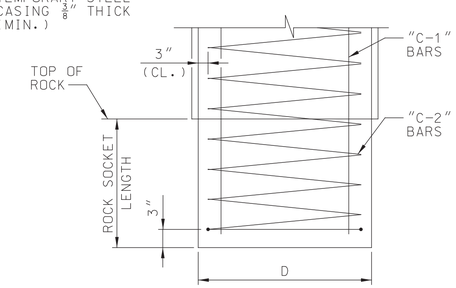

ROCK SOCKET DETAIL

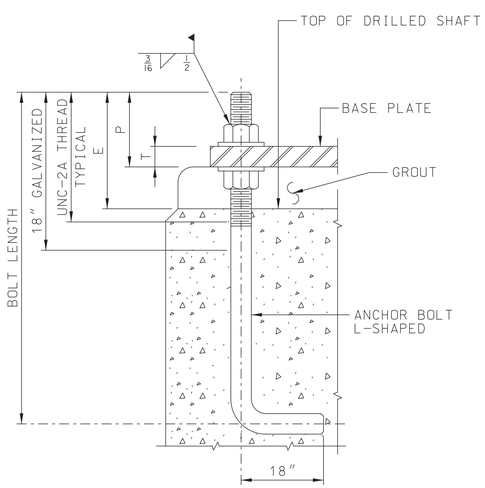

ANCHOR BOLT DETAIL

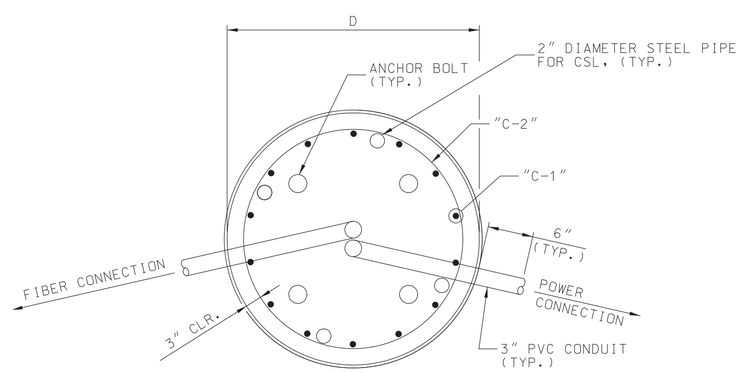

SECTION B-B

NOTES:

1. EXPOSED CONCRETE EDGES SHALL BE CHAMFERED 3/4" × 3/4" EXCEPT AS NOTED.
2. REINFORCEMENT BARS SHALL CONFORM TO THE DIMENSIONS SHOWN ON THIS DRAWING.
3. FOR LOCATION AND ORIENTATION OF 3" DIAMETER RIGID CONDUIT SEE INDIVIDUAL SITE PLAN SHEETS.
4. ALL FOUNDATIONS SHALL CONTAIN A 3/4" DIAMETER COPPER CLAD GROUND ROD. GROUND ROD SHALL HAVE A MINIMUM OF 5' OF EARTH CONTACT EXCEPT IN ROCK.
5. ALL CONDUITS AND ANCHOR BOLTS SHALL BE RIGIDLY INSTALLED BEFORE THE CONCRETE IS PLACED. ANCHOR BOLTS SHALL BE SPACED BY MEANS OF A TEMPLATE, THE CENTER OF WHICH SHALL COINCIDE WITH THE CENTER OF THE BASE.
6. 4 - 2" DIAMETER STEEL PIPES REQUIRED AT EACH DRILLED SHAFT FOR SONIC LOGGING TESTING.
7. INTEGRITY TESTING ON COMPETED DRILLED SHAFTS AND ROCK SOCKETS SHALL BE PERFORMED USING THE CROSSHOLE SONIC LOGGING (CSL) METHOD AND WILL BE PAID FOR UNDER THE CONTRACT UNIT PRICE FOR SONIC LOGGING TESTING, SEE SPECIAL PROVISIONS.
8. ALL REINFORCEMENT STEEL SHALL BE ASTM 615 GRADE 60.
9. ALL CONCRETE SHALL BE CLASS B-2 (f'c = 4,000 PSI) CONCRETE UNLESS OTHERWISE SPECIFIED.
10. NO SITE SPECIFIC SOIL DATA WAS COLLECTED. IF ROCK IS ENCOUNTERED SHALLOWER THAN THE SHAFT LENGTH, DRILL THE ROCK SOCKET TO THE DESIGN DEPTH OR 3 SHAFT DIAMETERS INTO THE ROCK WHICHEVER IS SHALLOWER. NO ADDITIONAL PAYMENT WILL BE MADE FOR ROCK SOCKET IF NECESSARY.

ITS DETAIL
DMS DRILLED SHAFT DETAILS
SHEET 4 OF 12

STATE OF MISSOURI
CHARLES A. MILLER
NUMBER E-2002000606
REGISTERED PROFESSIONAL ENGINEER

THIS SHEET HAS BEEN SIGNED, SEALED, AND DATED ELECTRONICALLY.

IF A SEAL IS PRESENT ON THIS SHEET IT HAS BEEN ELECTRONICALLY SEALED AND DATED.

DATE PREPARED	
16-NOV-2012	
ROUTE: I-70	STATE: MO
DISTRICT: SL	SHEET NO.: 41
COUNTY: ST. CHARLES	
JOB NO.: J6I2412	
CONTRACT ID.	
PROJECT NO.	
BRIDGE NO.	

DATE	DESCRIPTION	REV.

MISSOURI HIGHWAYS AND TRANSPORTATION COMMISSION
105 WEST CAPITOL
JEFFERSON CITY, MO 65102
1-888-ASK-MODOT (1-888-275-6636)

HNTB
715 KIRK DRIVE
KANSAS CITY, MO 64105
(816) 472-1201

\\kcow00\jobs4\50299\DS005\ITS\Drawings\CD\Plans\041_DTL4_J6I2412_i1.dgn 10:51 AM 16-NOV-2012

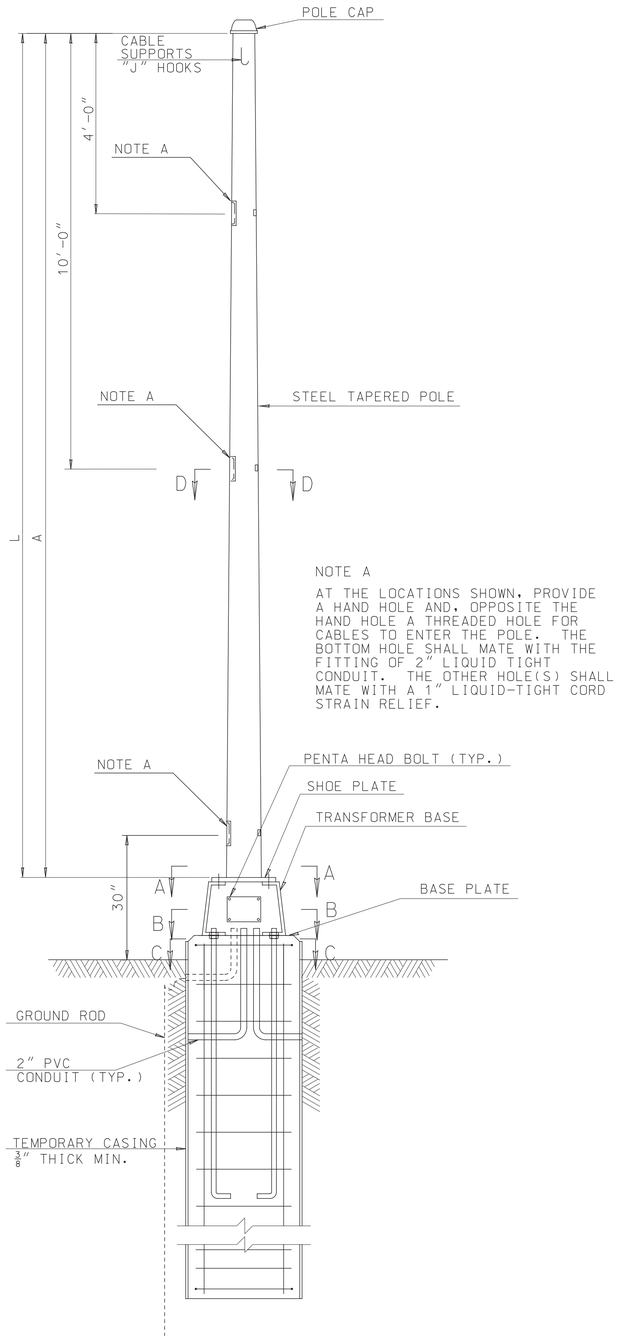

NOTE A

AT THE LOCATIONS SHOWN, PROVIDE A HAND HOLE AND, OPPOSITE THE HAND HOLE A THREADED HOLE FOR CABLES TO ENTER THE POLE. THE BOTTOM HOLE SHALL MATE WITH THE FITTING OF 2" LIQUID TIGHT CONDUIT. THE OTHER HOLE(S) SHALL MATE WITH A 1" LIQUID-TIGHT CORD STRAIN RELIEF.

TYPICAL DETECTOR POLE & 30' CCTV CAMERA POLE

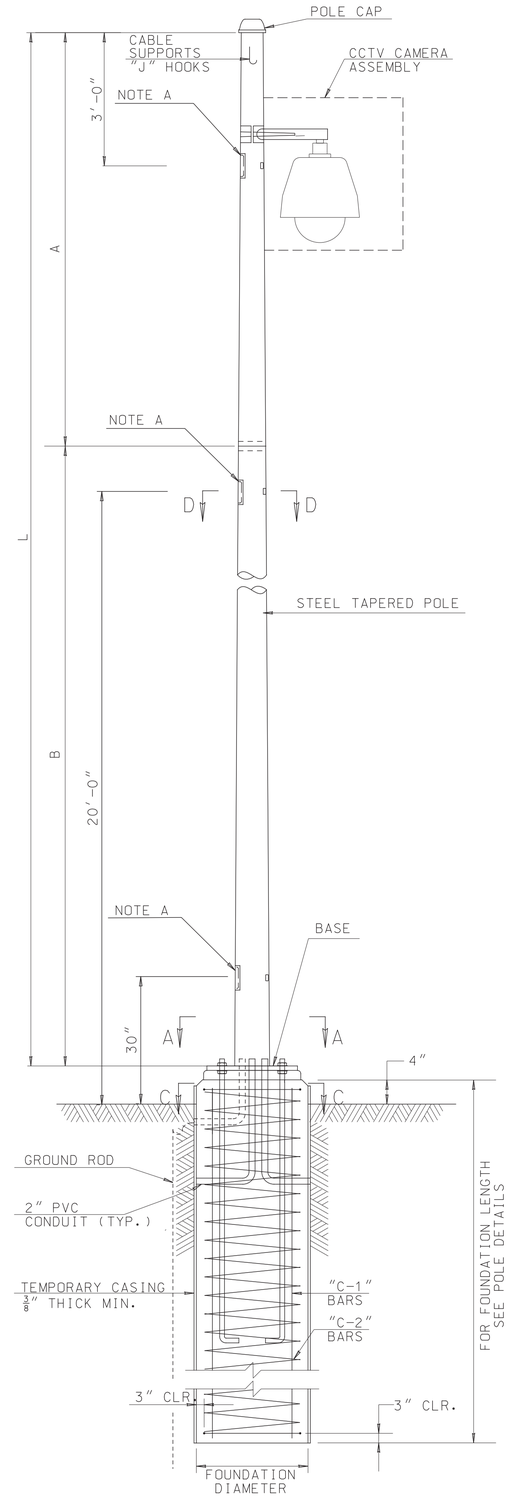

TYPICAL 50' CCTV POLE

POLE TABLE								
POLE HEIGHT L (FT)	A				B			
	DIA. @ TOP	DIA. @ BOT.	THICKNESS	LENGTH (FT)	DIA. @ TOP	DIA. @ BOT.	THICKNESS	LENGTH (FT)
30	6"	8"	1/4"	30	–	–	–	–
50	6"	9 1/2"	5/16"	25	9 1/2"	13"	5/16"	25

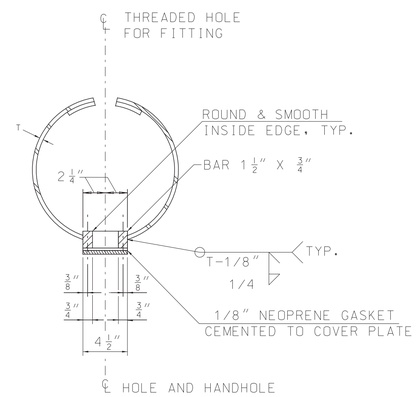

SECTION D-D

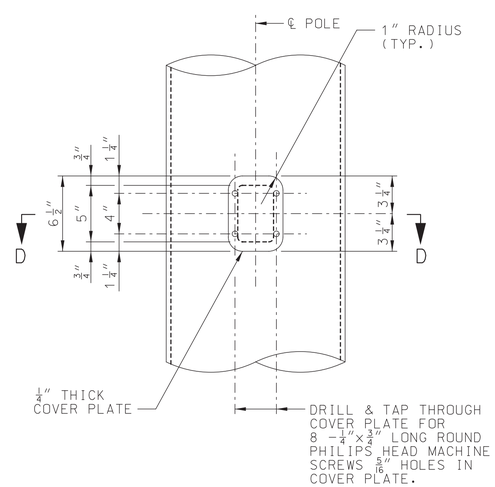

HAND HOLE AND COVER DETAIL

NOTES:

1. FOR CCTV POLE FOUNDATION DETAILS SEE SHEET 43 - POLE DETAILS.
2. THE LOCATION OF ERECTION CHANNELS TO BE DETERMINED BY THE MANUFACTURER OF POLE.
3. FOR SECTIONS A-A, B-B AND C-C SEE SHEET 43 - POLE DETAILS.
4. FOR ADDITIONAL DETAILS OF DETECTOR POLES AND DETECTOR POLE FOUNDATIONS SEE SHEET 45 - MICROWAVE DETECTOR MOUNTING DETAIL.
5. TRANSFORMER BASE SHALL BE CERTIFIED AS MEETING THE BREAKAWAY CRITERIA AND STRUCTURAL REQUIREMENTS AS SET BY THE CURRENT "AASHTO STANDARD SPECIFICATIONS FOR STRUCTURAL SUPPORTS FOR HIGHWAY SIGNS, LUMINAIRES AND TRAFFIC SIGNALS."
6. TEMPORARY STEEL CASING MAY BE REQUIRED IN EACH SHAFT TO PREVENT SOIL COLLAPSE.
7. ALL CONDUITS AND ANCHOR BOLTS SHALL BE RIGIDLY INSTALLED BEFORE THE CONCRETE IS PLACED. ANCHOR BOLTS SHALL BE SPACED BY MEANS OF A TEMPLATE AT THE TOP OF THE ANCHOR BOLTS, THE CENTER OF WHICH SHALL COINCIDE WITH THE CENTER OF THE FOUNDATION.
8. HIGH STRENGTH BOLTS, NUTS AND WASHERS SHALL CONFORM TO AASHTO M164 OR HIGH STRENGTH BOLTS CONFORMING TO ASTM A193 AND GRADES B5, B6, B7 OR B16 AND NUTS CONFORMING TO ASTM A194 WILL BE PERMITTED.
9. ALL ANCHOR BOLTS SHALL BE FULLY GALVANIZED.

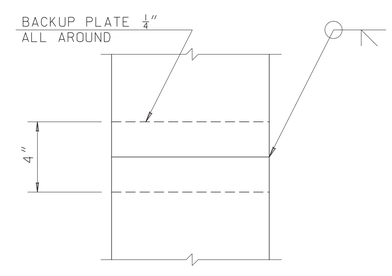

SPLICE DETAIL

ITS DETAIL
DETECTOR
AND CCTV POLE
FOUNDATIONS
SHEET 5 OF 12

STATE OF MISSOURI
CHARLES A. MILLER
NUMBER E-2002000606
REGISTERED PROFESSIONAL ENGINEER

THIS SHEET HAS BEEN SIGNED, SEALED, AND DATED ELECTRONICALLY.

DATE PREPARED	16-NOV-2012
ROUTE	I-70
STATE	MO
DISTRICT	SL
SHEET NO.	42
COUNTY	ST. CHARLES
JOB NO.	J6I2412
CONTRACT ID.	
PROJECT NO.	
BRIDGE NO.	

DATE	DESCRIPTION

MISSOURI HIGHWAYS AND TRANSPORTATION COMMISSION
105 WEST CAPITOL
JEFFERSON CITY, MO 65102
1-888-ASK-MODOT (1-888-275-6636)

HNTB
715 KIRK DRIVE
KANSAS CITY, MO 64105
(816) 472-1201

IF A SEAL IS PRESENT ON THIS SHEET IT HAS BEEN ELECTRONICALLY SEALED AND DATED.

REV.

CCTV POLE LOCATIONS		
DEVICE ID	LOCATION	POLE HEIGHT (FT)
MI070W222.2C	I-70 AT MID RIVERS MALL DRIVE	50
MR00CN000.1C	RTE. C (MID RIVERS MALL DR.) & I-70 NOR	30

SCHEDULE OF CCTV POLE FOUNDATIONS									
POLE TYPE	POLE HEIGHT (FT)	FOUNDATION LENGTH	FOUNDATION DIAMETER	TYPE "C-1"		*TYPE "C-2"			REMARKS
				NO.& SIZE	LENGTH	NO.& SIZE	RD	LENGTH	
9	30	12'-0"	2'-0"	8-#7	11'-6"	1-#4	1'-6"	67'-1"	IF ROCK IS ENCOUNTERED SHALLOWER THAN FOUNDATION LENGTH, DRILL ROCK SOCKET TO DESIGN DEPTH OR 3 DIAMETERS OF THE SHAFT WHICHEVER IS SHALLOWER.
15	50	16'-0"	2'-6"	8-#9	15'-6"	1-#4	2'-0"	114'-3"	

*FOUR ANGLE OR CHANNEL SPACERS ARE REQUIRED FOR EACH SPIRAL. SPACERS ARE TO BE PLACED ON INSIDE OF SPIRALS. LENGTH AND WEIGHT OF SPIRALS DO NOT INCLUDE SPLICES OR SPACERS.

POLE BASE PLATE ASSEMBLY										
POLE HEIGHT L (FT)	BASE PLATE							ANCHOR BOLTS		
	B	C	F	H	S	R	T	P	SIZE DIA. × LENGTH	E
30	$15\frac{1}{2}''$	$21\frac{1}{2}''$	11"	$1\frac{9}{16}''$	17"	3"	$1\frac{3}{8}''$	4"	$1\frac{1}{4}''$ X 3'-6"	7"
50	$19\frac{1}{2}''$	$25\frac{1}{2}''$	$13\frac{3}{4}''$	$1\frac{13}{16}''$	$19\frac{3}{4}''$	3"	$2\frac{1}{4}''$	5"	$1\frac{1}{2}''$ X 3'-6"	8"

POLE SHOE PLATE ASSEMBLY								
POLE HEIGHT L (FT)	SHOE PLATE							H.S. BOLTS
	B	C	F	H	S	R	T	NO. & SIZE
30	$12\frac{1}{2}''$	$17\frac{1}{2}''$	$8\frac{13}{16}''$	$1\frac{3}{16}''$	14"	$2\frac{1}{2}''$	$1\frac{1}{2}''$	$4-1\frac{1}{8}''$ ⌀

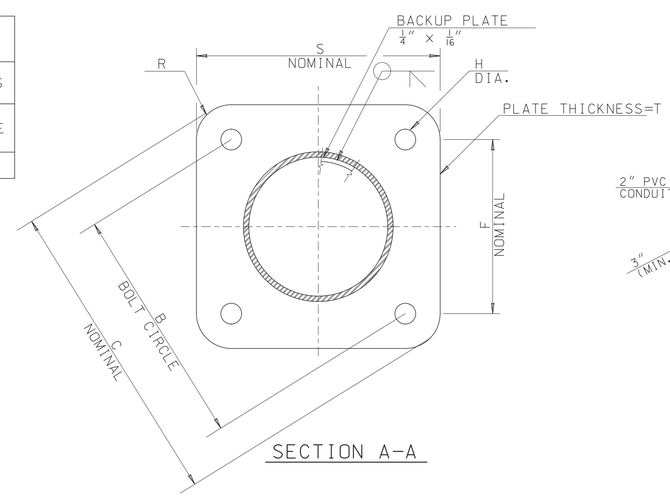

SECTION A-A

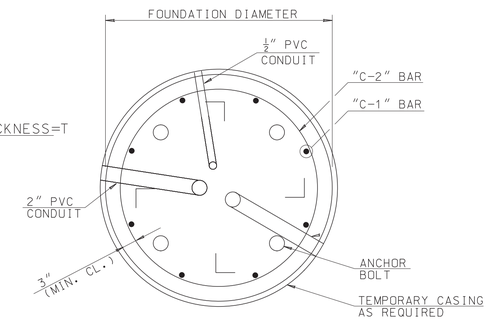

SECTION C-C

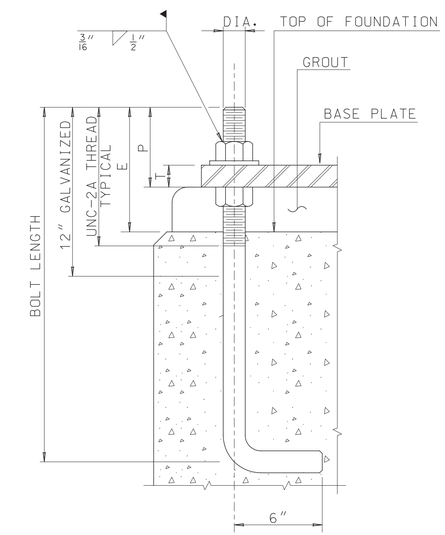

ANCHOR BOLT DETAIL

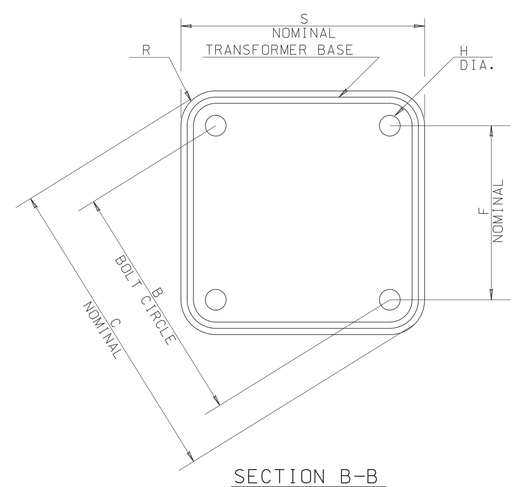

SECTION B-B

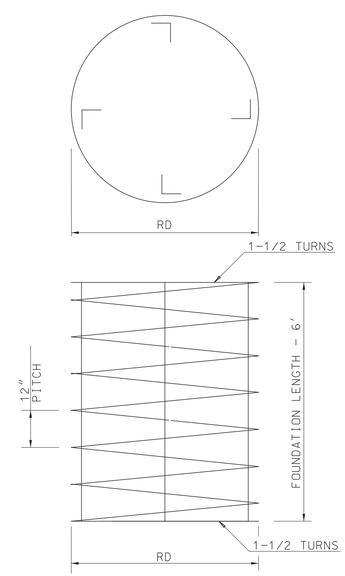

TYPE "C-2" TIE DETAIL

NOTES:

1. THE INFORMATION PROVIDED IN THE SCHEDULE OF POLE FOUNDATIONS IS FOR BIDDING PURPOSES ONLY. PRIOR TO COMMENCING CONSTRUCTION, THE CONTRACTOR SHALL SUBMIT TO THE ENGINEER A REQUEST FOR SOIL BORINGS AT EACH FOUNDATION LOCATION. THE ENGINEER WILL USE THE INFORMATION OBTAINED FROM THE SOIL BORINGS TO VERIFY FOUNDATION TYPE, LENGTH AND REINFORCING SHOWN.
2. FOR LOCATION OF SECTIONS A-A B-B AND C-C SEE SHEET 42 - DETECTOR AND CCTV POLES AND FOUNDATIONS.
3. INTEGRITY TESTING ON COMPLETED DRILLED SHAFTS FOR POLE FOUNDATIONS WILL NOT BE REQUIRED.

ITS DETAIL
POLE DETAILS
SHEET 6 OF 12

STATE OF MISSOURI
CHARLES A. MILLER
NUMBER E-2002000606
REGISTERED PROFESSIONAL ENGINEER

THIS SHEET HAS BEEN SIGNED, SEALED, AND DATED ELECTRONICALLY.

DATE PREPARED 16-NOV-2012
ROUTE I-70 | STATE MO
DISTRICT SL | SHEET NO. 43
COUNTY ST. CHARLES
JOB NO. J6I2412
CONTRACT ID.
PROJECT NO.
BRIDGE NO.

DATE	DESCRIPTION

IF A SEAL IS PRESENT ON THIS SHEET IT HAS BEEN ELECTRONICALLY SEALED AND DATED.

MISSOURI HIGHWAYS AND TRANSPORTATION COMMISSION
105 WEST CAPITOL
JEFFERSON CITY, MO 65102
1-888-ASK-MODOT (1-888-275-6636)

HNTB
715 KIRK DRIVE
KANSAS CITY, MO 64105
(816) 472-1201

REV.

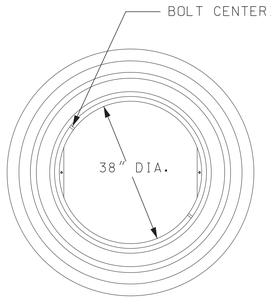

TOP VIEW

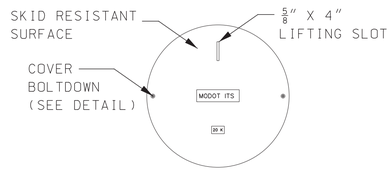

COVER ②

COVER SECTION

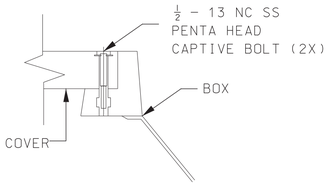

COVER BOLTDOWN DETAIL

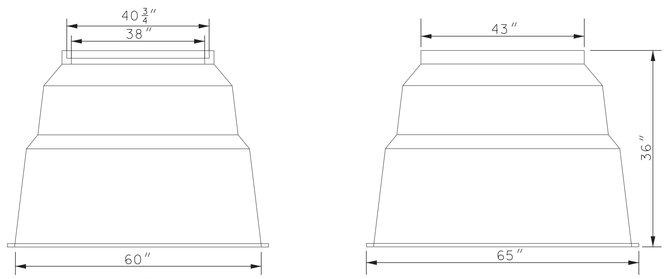

SECTION

END VIEW

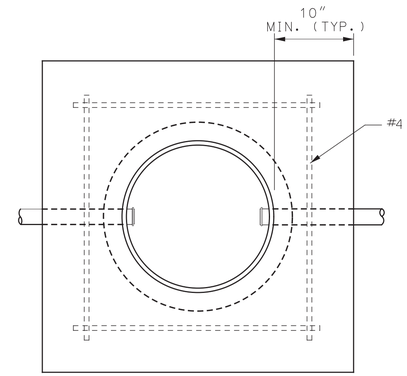

PLAN
PULL BOX GREATER THAN 2'-0" FROM SHOULDER

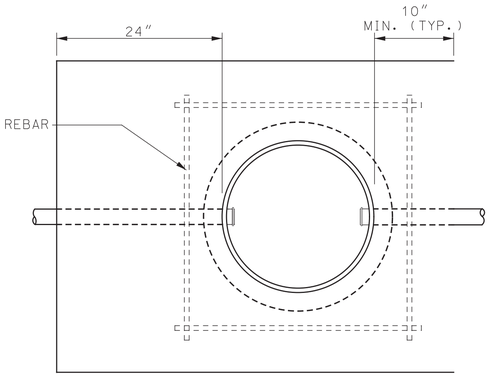

PLAN
PULL BOX ADJACENT TO SHOULDER

NOTES:

1. PULLBOX FRAMES AND COVERS SHALL BE POLYMER CONCRETE.
2. PULLBOX COVERS SHALL HAVE AN APPROVED WHEEL LOAD OF 20,000 LBS AND BE UV STABILIZED.
3. IF SUBSURFACE CONDITIONS EXIST WHICH PROHIBIT THE PLACEMENT OF THE GROUND ROD IN A VERTICAL POSITION, THE ROD MAY BE DRIVEN AT AN OBLIQUE ANGLE NOT TO EXCEED 45 DEGREES FROM VERTICAL OR BURIED IN A TRENCH AT LEAST 30 IN. DEEP. CONNECTION TO GROUND ROD SHALL BE CADWELDED.

① AGGREGATE SHALL CONFORM TO SEC 1007.1, TYPE 1 OF MODOT STANDARD SPECIFICATIONS.

② CIRCULAR PULL BOXES SHALL BE LABELED "MODOT ITS". TEXT SHALL BE 4" IN HEIGHT AND CENTERED.

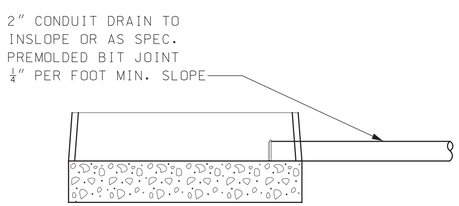

TYPE II DRAIN TYPE
(SEE DRAIN OUTLET DETAILS)
(SECTION ABOVE BREAK APPLICABLE TO TYPE I DRAIN.)

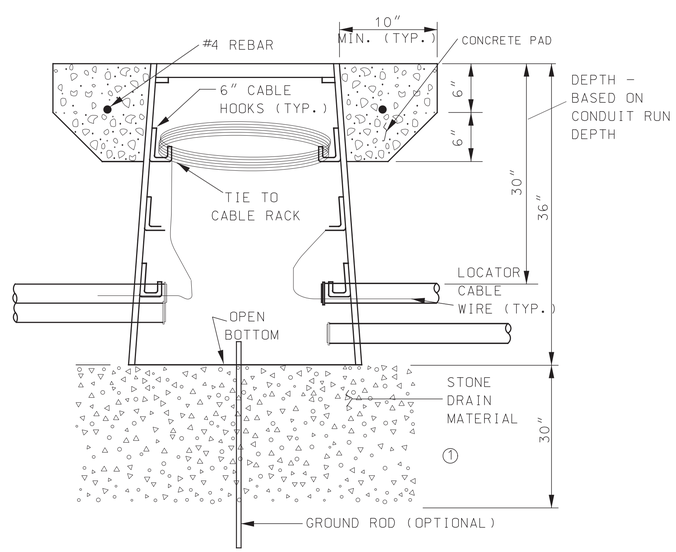

SECTION A-A
TYPE I DRAIN TYPE

ITS DETAIL
ITS PULLBOX
SHEET 7 OF 12

STATE OF MISSOURI
CHARLES A. MILLER
NUMBER E-2002000606
REGISTERED PROFESSIONAL ENGINEER

THIS SHEET HAS BEEN SIGNED, SEALED, AND DATED ELECTRONICALLY.

DATE PREPARED	16-NOV-2012
ROUTE	I-70
STATE	MO
DISTRICT	SL
SHEET NO.	44
COUNTY	ST. CHARLES
JOB NO.	J6I2412
CONTRACT ID.	
PROJECT NO.	
BRIDGE NO.	

DESCRIPTION

DATE

MISSOURI HIGHWAYS AND TRANSPORTATION COMMISSION
105 WEST CAPITOL
JEFFERSON CITY, MO 65102
1-888-ASK-MODOT (1-888-275-6636)

HNTB
715 KIRK DRIVE
KANSAS CITY, MO 64105
(816) 472-1201

IF A SEAL IS PRESENT ON THIS SHEET IT HAS BEEN ELECTRONICALLY SEALED AND DATED.

REV.

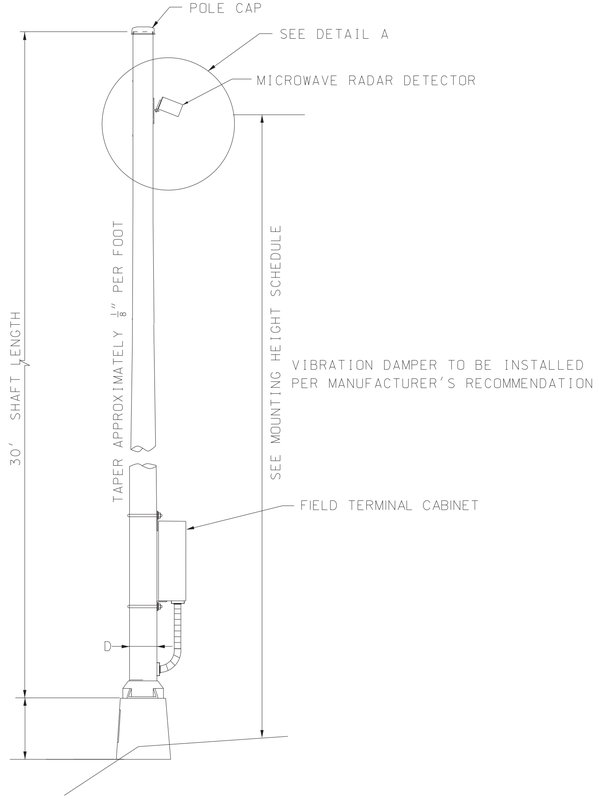

MICROWAVE RADAR DETECTOR MOUNTING
ON TYPICAL DETECTOR POLE

NOTE:
FOR DETECTOR POLE FOUNDATION SEE
STANDARD PLAN 901.01

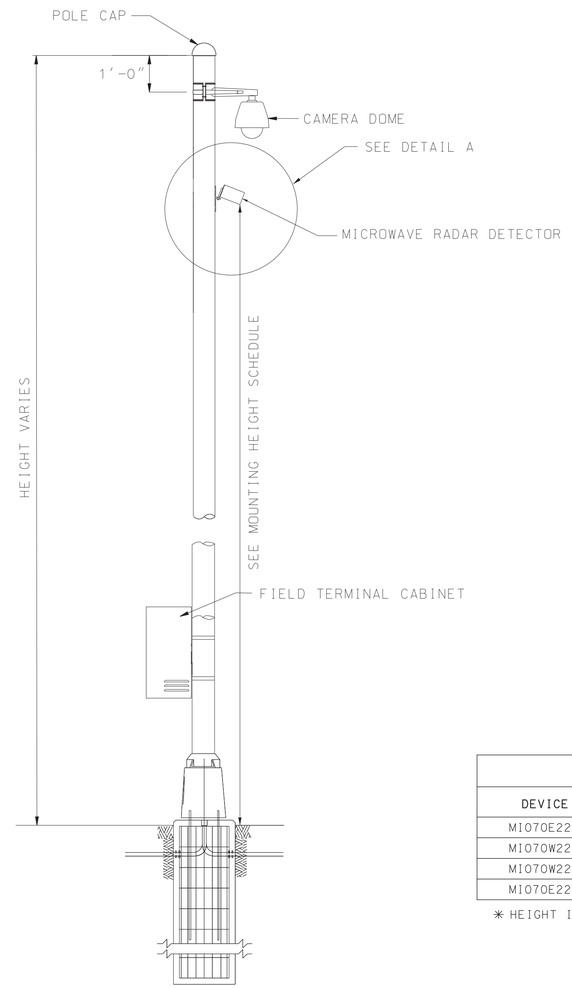

MICROWAVE RADAR DETECTOR MOUNTING
ON TYPICAL CAMERA POLE

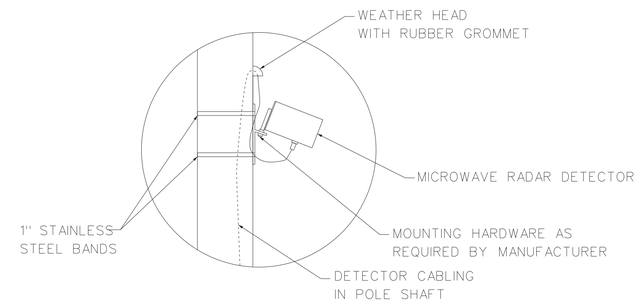

DETAIL A

RADAR DETECTOR MOUNTING HEIGHT

DEVICE ID	LOCATION	MOUNTING HEIGHT*
MI070E220.5D	I-70 AT RTE. 79 (SALT LICK RD.)	25'
MI070W222.2D	I-70 WB ON-RAMP FROM RTE. C (MID RIVERS MALL DR.)	18'
MI070W222.3D	I-70 AT RTE. C (MID RIVERS MALL DR.)	23'
MI070E222.6D	I-70 EAST OF RTE. C (MID RIVERS MALL DR.)	17'

* HEIGHT IS MEASURE FROM THE ROADWAY SURFACE.

ITS DETAIL
RADAR DETECTOR
MOUNTING DETAIL
SHEET 8 OF 12

STATE OF MISSOURI
CHARLES A. MILLER
NUMBER E-2002000606
REGISTERED PROFESSIONAL ENGINEER

THIS SHEET HAS BEEN SIGNED, SEALED, AND DATED ELECTRONICALLY.

DATE PREPARED	
16-NOV-2012	
ROUTE: I-70	STATE: MO
DISTRICT: SL	SHEET NO.: 45
COUNTY: ST. CHARLES	
JOB NO.: J6I2412	
CONTRACT ID.	
PROJECT NO.	
BRIDGE NO.	

DATE	DESCRIPTION

MISSOURI HIGHWAYS AND TRANSPORTATION COMMISSION
105 WEST CAPITOL
JEFFERSON CITY, MO 65102
1-888-ASK-MODOT (1-888-275-6636)

HNTB
715 KIRK DRIVE
KANSAS CITY, MO 64105
(816) 472-1201

IF A SEAL IS PRESENT ON THIS SHEET IT HAS BEEN ELECTRONICALLY SEALED AND DATED.

REV.

\\kcow00\jobs4\50299\DS005\ITS\Drawings\CD\Plans\045_DTL8_J6I2412_i1.dgn 10:52 AM 16-NOV-2012

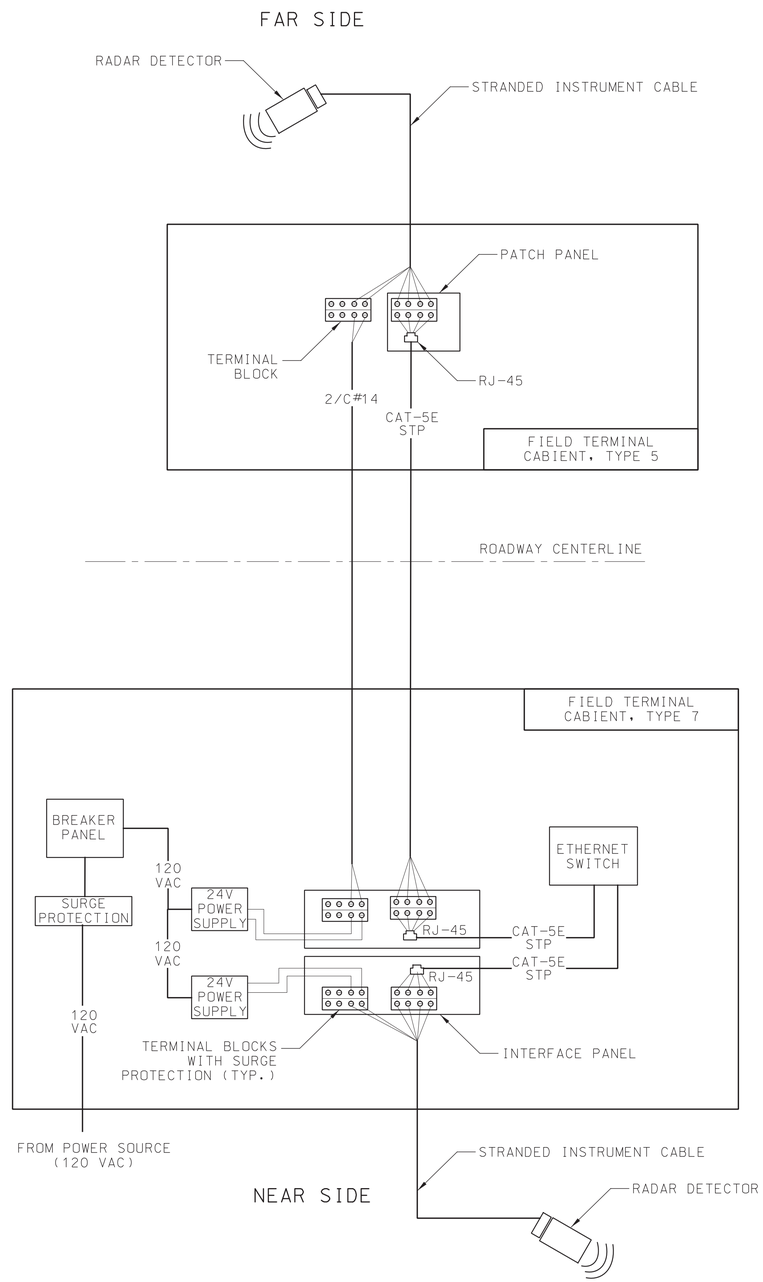

TYPICAL DETECTOR CONNECTIONS

NOT TO SCALE

ITS DETAIL
RADAR DETECTOR
CABLING AND
CONNECTION DETAIL
SHEET 9 OF 12

STATE OF MISSOURI
CHARLES A. MILLER
NUMBER E-2002000606
REGISTERED PROFESSIONAL ENGINEER

THIS SHEET HAS BEEN SIGNED, SEALED, AND DATED ELECTRONICALLY.

DATE PREPARED 16-NOV-2012	
ROUTE I-70	STATE MO
DISTRICT SL	SHEET NO. 46
COUNTY ST. CHARLES	
JOB NO. J6I2412	
CONTRACT ID.	
PROJECT NO.	
BRIDGE NO.	

DATE	DESCRIPTION

MISSOURI HIGHWAYS AND TRANSPORTATION COMMISSION
105 WEST CAPITOL
JEFFERSON CITY, MO 65102
1-888-ASK-MODOT (1-888-275-6636)

HNTB
715 KIRK DRIVE
KANSAS CITY, MO 64105
(816) 472-1201

IF A SEAL IS PRESENT ON THIS SHEET IT HAS BEEN ELECTRONICALLY SEALED AND DATED.

REV.

\\kcow00\jobs4\50299\DS005\ITS\Drawings\CD\Plans\046_DTL9_J6I2412_i1.dgn 10:52 AM 16-NOV-2012

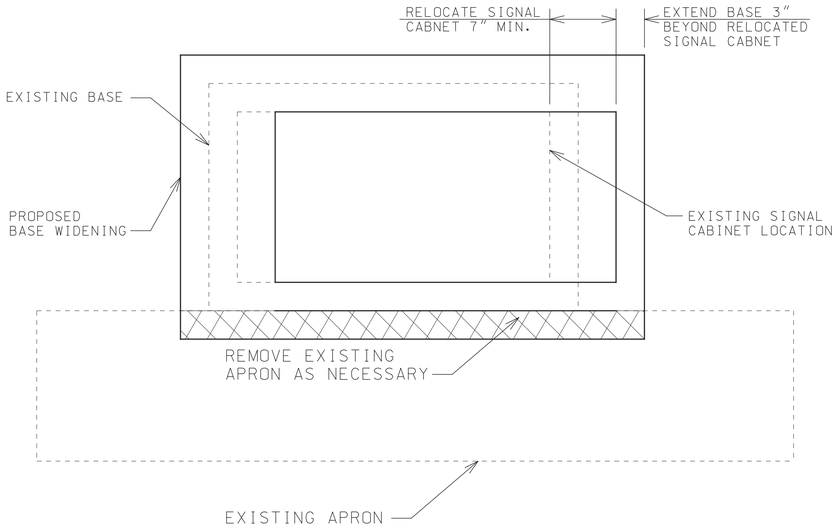

PLAN

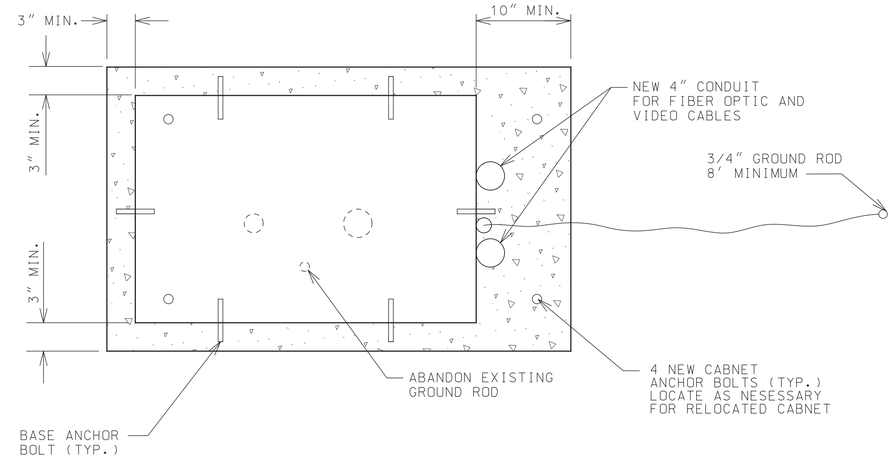

HORIZONTAL SECTION

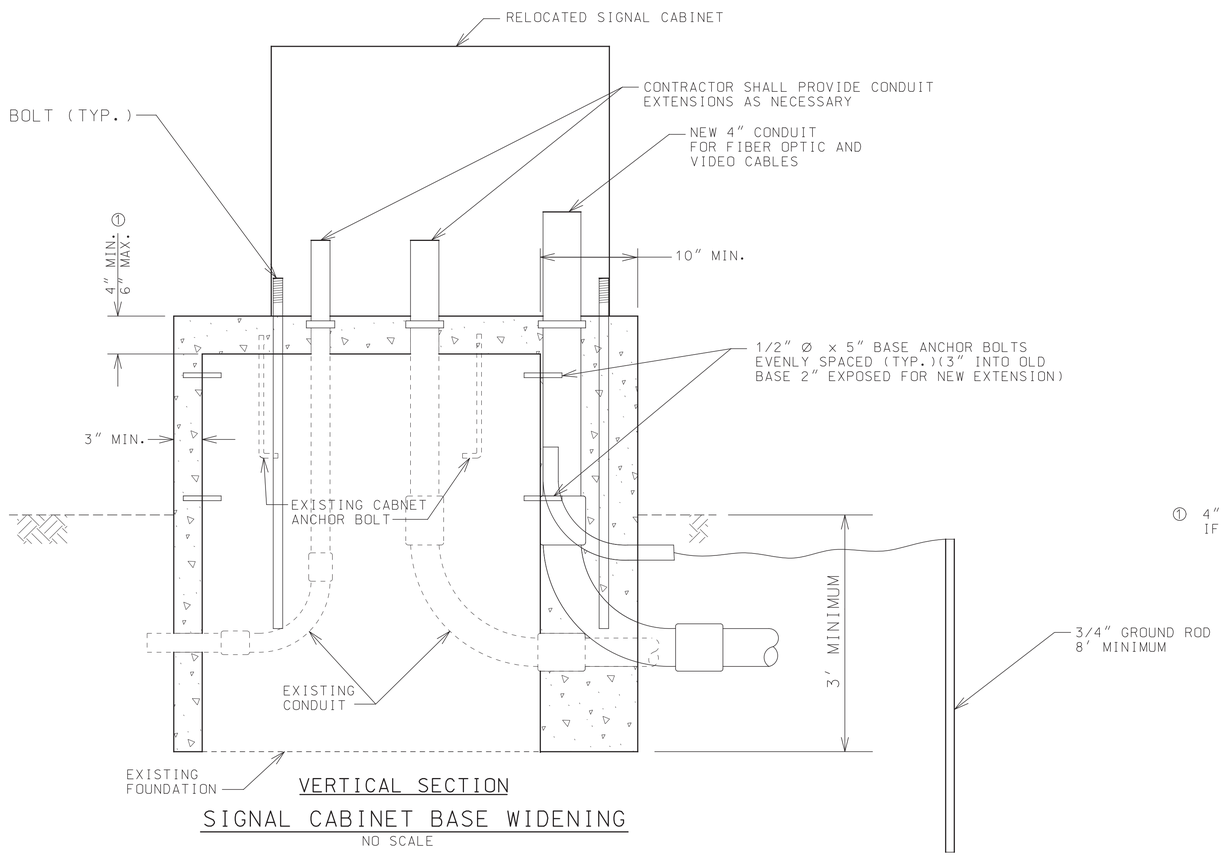

VERTICAL SECTION

SIGNAL CABINET BASE WIDENING

NO SCALE

① 4" TOP CONCRETE MAY BE ELIMINATED IF CONDUIT EXTENSION IS NOT FEASIBLE.

ITS DETAIL
TRAFFIC SIGNAL
CABINET BASE WRAP
SHEET 10 OF 12

STATE OF MISSOURI
CHARLES A. MILLER
NUMBER E-2002000606
REGISTERED PROFESSIONAL ENGINEER

THIS SHEET HAS BEEN SIGNED, SEALED, AND DATED ELECTRONICALLY.

DATE PREPARED	16-NOV-2012
ROUTE	I-70
STATE	MO
DISTRICT	SL
SHEET NO.	47
COUNTY	ST. CHARLES
JOB NO.	J6I2412
CONTRACT ID.	
PROJECT NO.	
BRIDGE NO.	

DATE	DESCRIPTION

IF A SEAL IS PRESENT ON THIS SHEET IT HAS BEEN ELECTRONICALLY SEALED AND DATED.

MISSOURI HIGHWAYS AND TRANSPORTATION COMMISSION
105 WEST CAPITOL
JEFFERSON CITY, MO 65102
1-888-ASK-MODOT (1-888-275-6636)

HNTB
715 KIRK DRIVE
KANSAS CITY, MO 64105
(816) 472-1201

REV.

\\kcow00\jobs4\50299\DS005\ITS\Drawings\CD\Plans\047_DTL10_J6I2412_i1.dgn 10:52 AM 16-NOV-2012

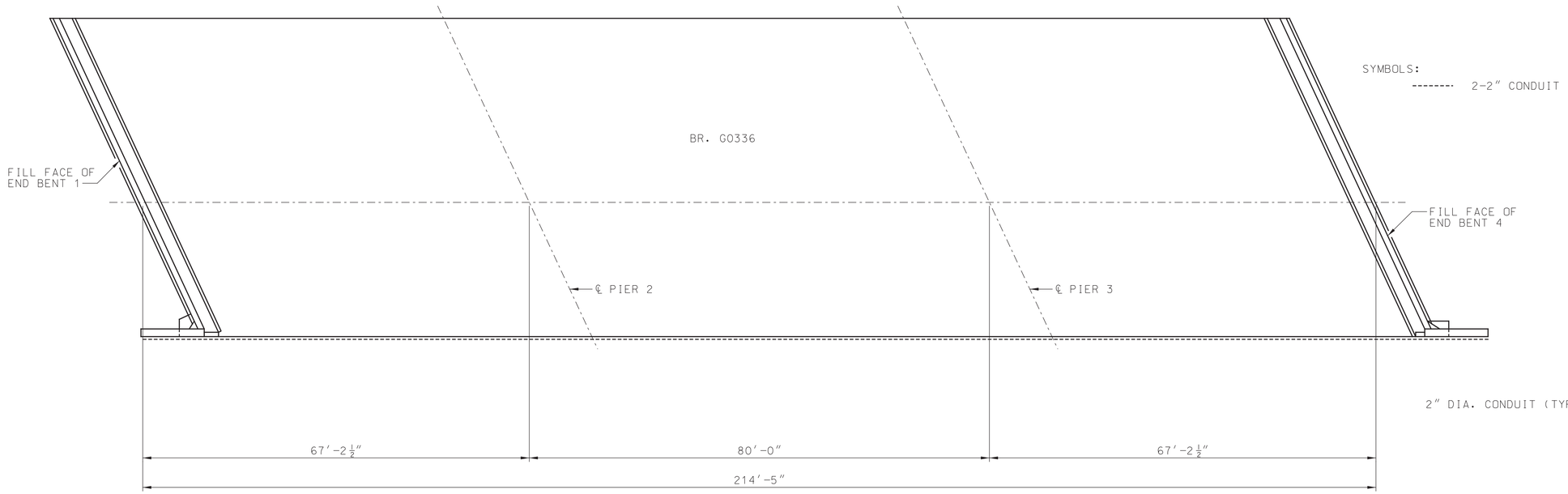

PLAN OF CONDUIT SYSTEM

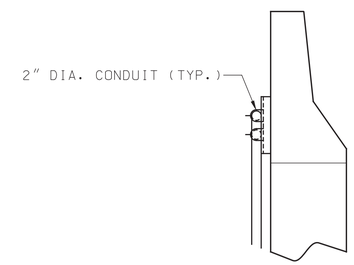

SECTION B-B

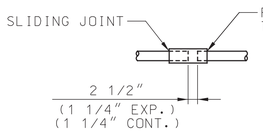

DETAIL "C"

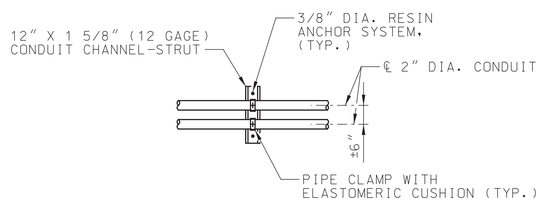

DETAIL "D"

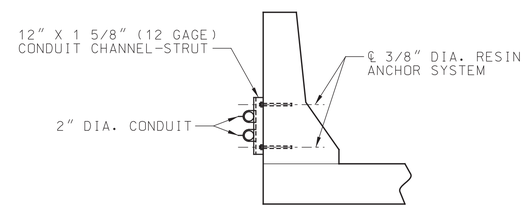

SECTION A-A

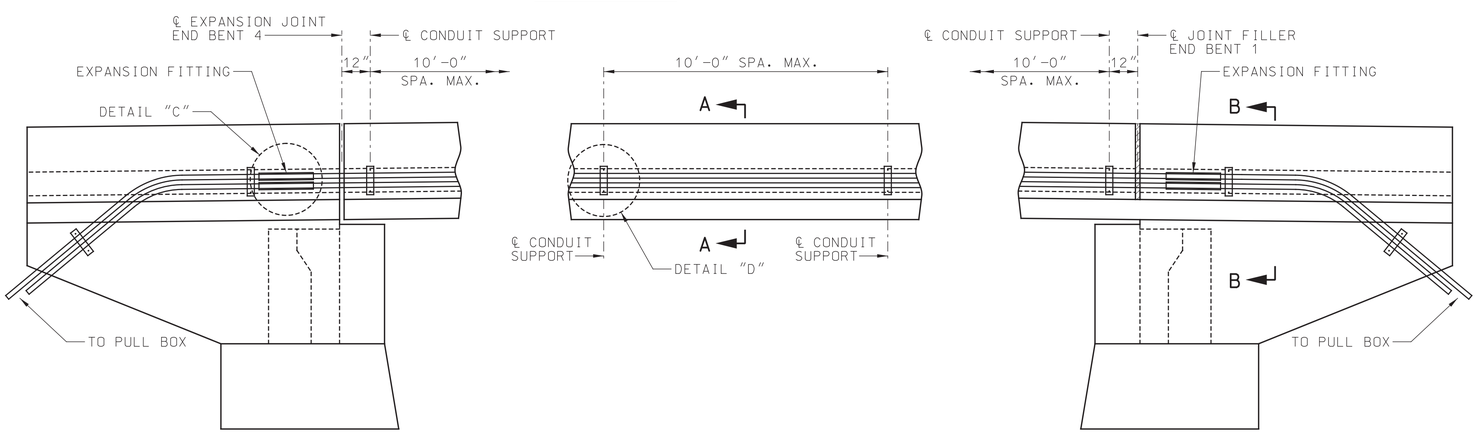

PART ELEVATION OF CONDUIT ON STRUCTURE

NOTES:

1. CONDUITS SHALL BE RIGID METALLIC CONDUIT (RMC) AND SHALL MEET THE REQUIREMENTS OF SECTION 1060. EACH SECTION OF CONDUIT SHALL BEAR THE UNDERWRITERS' LABORATORIES, INC., (UL) LABEL.
2. WEEPHOLES SHALL BE PROVIDED AT APPROPRIATE LOCATIONS TO DRAIN ANY MOISTURE IN THE CONDUIT SYSTEM.
3. ALL JUNCTION BOXES SHALL BE PVC MOLDED SURFACE MOUNTED AND EQUAL TO CARLON ELECTRICAL CONSTRUCTION PRODUCTS OR CANTEX, INC. THE COVERS SHALL BE OF WATERTIGHT CONSTRUCTION AND SHALL MEET REQUIREMENTS FOR NEMA 4 ENCLOSURE.
4. EXPANSION FITTINGS SHALL BE CAPABLE OF PROVIDING ± 2" OF MOVEMENT (4" TOTAL).
5. CONDUITS SHALL BE SECURELY ATTACHED TO THE OUTSIDE FACE OF THE SAFETY BARRIER CURB. THE MAXIMUM CONDUIT SUPPORT SPACING SHALL BE 10-FEET UNLESS OTHERWISE DIRECTED BY THE ENGINEER. EACH CONDUIT SUPPORT SYSTEM SHALL CONSIST OF TWO (2) 3/8-INCH DIAMETER RESIN ANCHOR SYSTEMS; ONE (1) 12" X 1 5/8" X (12 GAGE) CONDUIT CHANNEL-STRUT; TWO (2) PIPE CLAMPS WITH ELASTOMERIC CUSHIONS.
6. ALL STEEL SHAPES AND PLATES SHALL CONFORM TO ASTM A570, GRADE 33, AND SHALL BE HOT-DIP GALVANIZED CONFORMING TO ASTM A123. ALL NUTS, BOLTS, AND WASHERS SHALL BE GALVANIZED IN ACCORDANCE WITH ASTM A153.
7. EACH PIPE CLAMP SHALL HAVE AN ALLOWABLE SLIP RESISTANCE OF AT LEAST 500 POUNDS. CHANNEL NUTS MAY BE REQUIRED TO PROVIDE THE MINIMUM ALLOWABLE SLIP RESISTANCE.
8. THE RESIN ANCHOR SYSTEM SHALL CONSIST OF ONE OF THE APPROVED SYSTEMS LISTED IN THE SPECIAL PROVISIONS. EACH RESIN ANCHOR SHALL HAVE ALLOWABLE PULL-OUT STRENGTH OF AT LEAST 2,000 POUNDS IN 4,000 PSI CONCRETE. THE 3/8-INCH DIAMETER THREADED ROD USED IN THE RESIN ANCHOR SYSTEM SHALL CONFORM TO ASTM A36 AND SHALL BE HOT-DIP GALVANIZED IN ACCORDANCE WITH ASTM A153.
9. LOCATE REINFORCEMENT IN SAFETY BARRIER CURB WITH A PACHOMETER AND EXERCISE EXTREME CAUTION DURING THE INSTALLATION OF THE RESIN ANCHOR SYSTEM.
10. PAYMENT FOR FURNISHING AND INSTALLING CONDUIT SYSTEM, COMPLETE-IN-PLACE, WILL BE PAID FOR AT THE CONTRACT UNIT PRICE FOR CONDUIT SYSTEM ON STRUCTURE PER LINEAR FOOT.

ITS DETAIL
CONDUIT SYSTEM
ON STRUCTURE
OVER DARDENNE CREEK
SHEET 11 OF 12

STATE OF MISSOURI
CHARLES A. MILLER
NUMBER E-2002000606
REGISTERED PROFESSIONAL ENGINEER

THIS SHEET HAS BEEN SIGNED, SEALED, AND DATED ELECTRONICALLY.

DATE PREPARED	
16-NOV-2012	
ROUTE: I-70	STATE: MO
DISTRICT: SL	SHEET NO.: 48
COUNTY: ST. CHARLES	
JOB NO.: J6I2412	
CONTRACT ID.	
PROJECT NO.	
BRIDGE NO.	

DESCRIPTION	DATE

IF A SEAL IS PRESENT ON THIS SHEET IT HAS BEEN ELECTRONICALLY SEALED AND DATED.

MISSOURI HIGHWAYS AND TRANSPORTATION COMMISSION
105 WEST CAPITOL
JEFFERSON CITY, MO 65102
1-888-ASK-MODOT (1-888-275-6636)

HNTB
715 KIRK DRIVE
KANSAS CITY, MO 64105
(816) 472-1201

REV.

\\kcow00\jobs4\50299\DS005\ITS\Drawings\CD\Plans\048_DTL11_J6I2412_i1.dgn 10:52 AM 16-NOV-2012

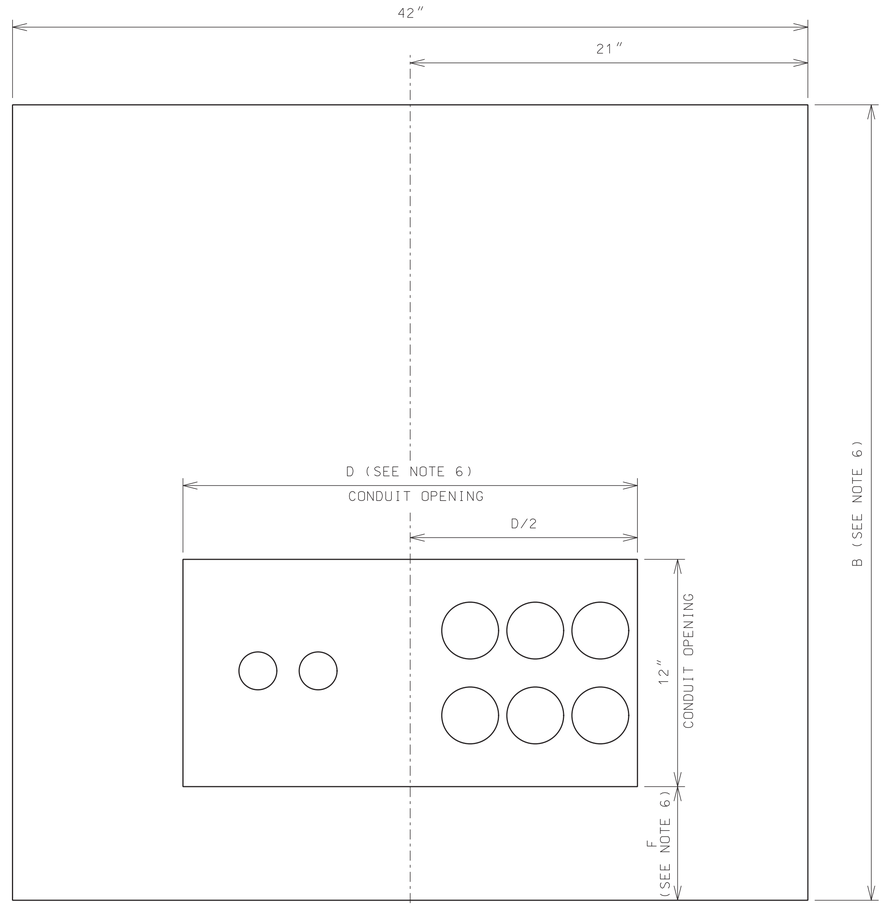

PLAN

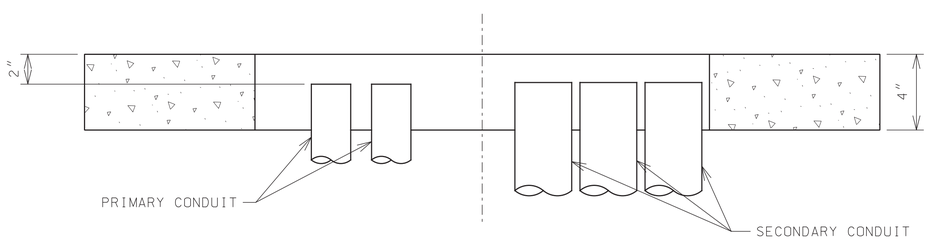

SECTION

NOTES:

1. THE NUMBER OF SECONDARY CABLES SHALL NOT EXCEED 12 PER PHASE.
2. SECONDARY CONDUIT SHALL BE SYMMETRICALLY LOCATED WITHIN A 12"X12" AREA.
3. THE MAXIMUM NUMBER OF SECONDARY CONDUITS IS 6 - 3".
4. THE MINIMUM NUMBER OF PRIMARY CONDUITS IS 2 - 3".
5. CONDUIT LAYOUT IS SHOWN FOR TYPE I TRANSFORMERS (32" HIGH). FOR TYPE II TRANSFORMERS (24" HIGH) THE PRIMARY AND SECONDARY CONDUITS SHALL BE REVERSED.
6. COORDINATE WITH AMEREN TO DETERMINE APPROPRIATE DIMENSIONS GIVEN TRANSFORMER TO BE USED.

COMPOSITE TRANSFORMER PAD DETAILS

ITS DETAIL
UTILITY
TRANSFORMER
PAD
SHEET 12 OF 12

STATE OF MISSOURI
CHARLES A. MILLER
NUMBER E-2002000606
REGISTERED PROFESSIONAL ENGINEER

THIS SHEET HAS BEEN SIGNED, SEALED, AND DATED ELECTRONICALLY.

DATE PREPARED	
16-NOV-2012	
ROUTE: I-70	STATE: MO
DISTRICT: SL	SHEET NO.: 49
COUNTY: ST. CHARLES	
JOB NO.: J6I2412	
CONTRACT ID.	
PROJECT NO.	
BRIDGE NO.	

DATE	DESCRIPTION

IF A SEAL IS PRESENT ON THIS SHEET IT HAS BEEN ELECTRONICALLY SEALED AND DATED.

MISSOURI HIGHWAYS AND TRANSPORTATION COMMISSION
105 WEST CAPITOL
JEFFERSON CITY, MO 65102
1-888-ASK-MODOT (1-888-275-6636)

HNTB
715 KIRK DRIVE
KANSAS CITY, MO 64105
(816) 472-1201

REV.

\\kcow00\jobs4\50299\DS005\ITS\Drawings\CD\Plans\049_DTL12_J6I2412_i1.dgn 10:52 AM 16-NOV-2012

SPEED	SIGN SPACING (ft.)		TAPER LENGTH (ft.)		OPTIONAL BUFFER LENGTH (ft.) (B)	CHANNELIZER SPACING (ft.)	
	UNDIVIDED (S)	DIVIDED (S)	SHOULDER[1] (T1)	LANE[2] (T2)		TAPERS	BUFFER/ WORK AREAS
0-35	–	200	70	245	120	35	50
40-45	–	500	150	540	220	40	100
50-55	–	1000	185	660	335	50	100
60-70	SA=1000 SB=1500 SC=2640		235	840	550	60	100

1 Shoulder taper length based on 10 ft. (standard shoulder width) offset.

2 Lane taper length based on 12 ft. (standard lane width) offset.

NONSTANDARD SHOULDER WIDTH TAPERS = SHOULDER WIDTH X SPEED

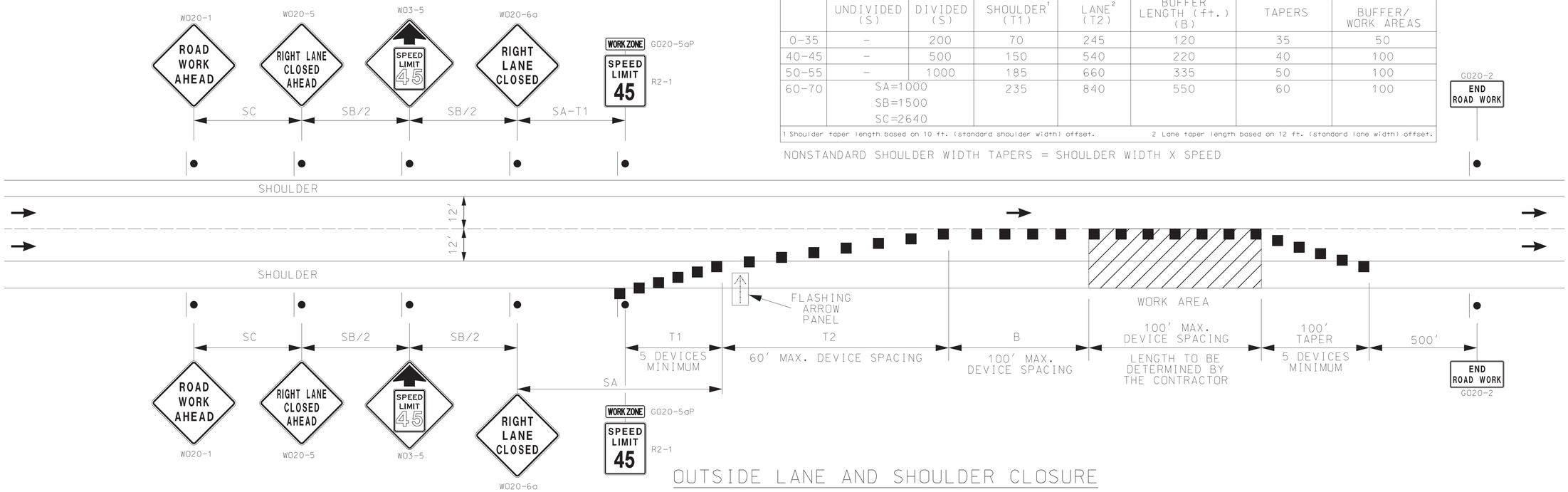

OUTSIDE LANE AND SHOULDER CLOSURE

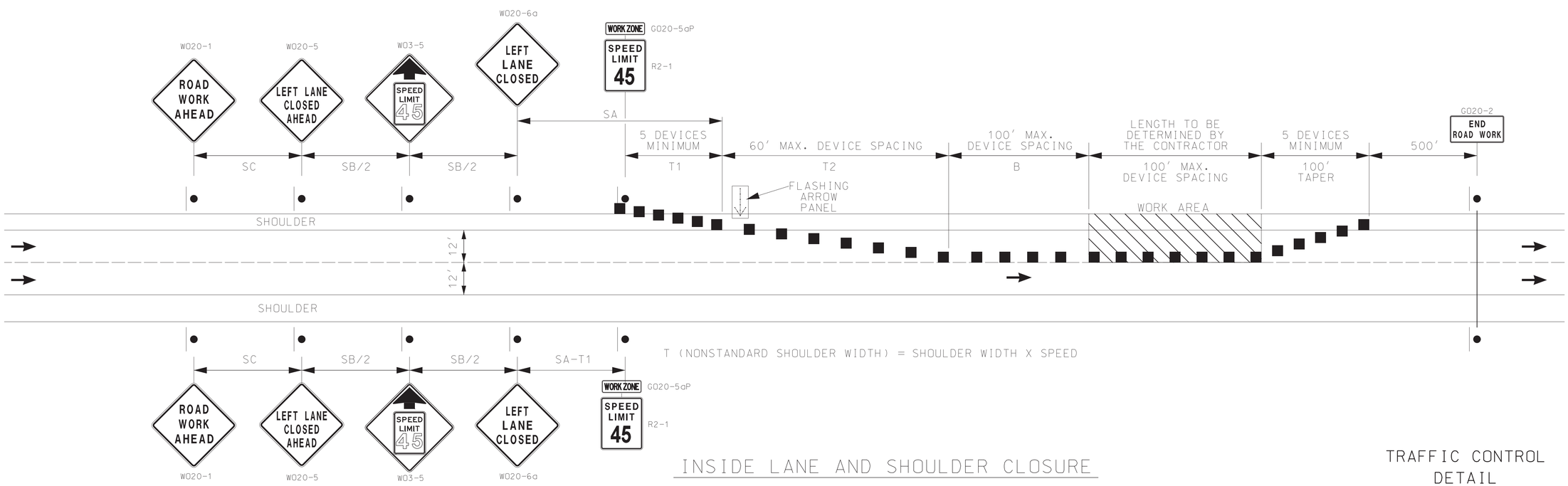

INSIDE LANE AND SHOULDER CLOSURE

TRAFFIC CONTROL DETAIL
SHEET 1 OF 2

STATE OF MISSOURI
CHARLES A. MILLER
NUMBER E-2002000606
REGISTERED PROFESSIONAL ENGINEER

THIS SHEET HAS BEEN SIGNED, SEALED, AND DATED ELECTRONICALLY.

DATE PREPARED	16-NOV-2012
ROUTE	I-70
STATE	MO
DISTRICT	SL
SHEET NO.	50
COUNTY	ST. CHARLES
JOB NO.	J6I2412
CONTRACT ID.	
PROJECT NO.	
BRIDGE NO.	

DESCRIPTION	DATE

MISSOURI HIGHWAYS AND TRANSPORTATION COMMISSION
105 WEST CAPITOL
JEFFERSON CITY, MO 65102
1-888-ASK-MODOT (1-888-275-6636)

HNTB
715 KIRK DRIVE
KANSAS CITY, MO 64105
(816) 472-1201

IF A SEAL IS PRESENT ON THIS SHEET IT HAS BEEN ELECTRONICALLY SEALED AND DATED.

REV.

SPEED	SIGN SPACING (ft.)		TAPER LENGTH (ft.)		OPTIONAL BUFFER LENGTH (ft.) (B)	CHANNELIZER SPACING (ft.)	
	UNDIVIDED (S)	DIVIDED (S)	SHOULDER[1] (T1)	LANE[2] (T2)		TAPERS	BUFFER/ WORK AREAS
0-35	-	200	70	245	120	35	50
40-45	-	500	150	540	220	40	100
50-55	-	1000	185	660	335	50	100
60-70	SA=1000 SB=1500 SC=2640		235	840	550	60	100

1 Shoulder taper length based on 10 ft. (standard shoulder width) offset. 2 Lane taper length based on 12 ft. (standard lane width) offset.

NONSTANDARD SHOULDER WIDTH TAPERS = SHOULDER WIDTH X SPEED

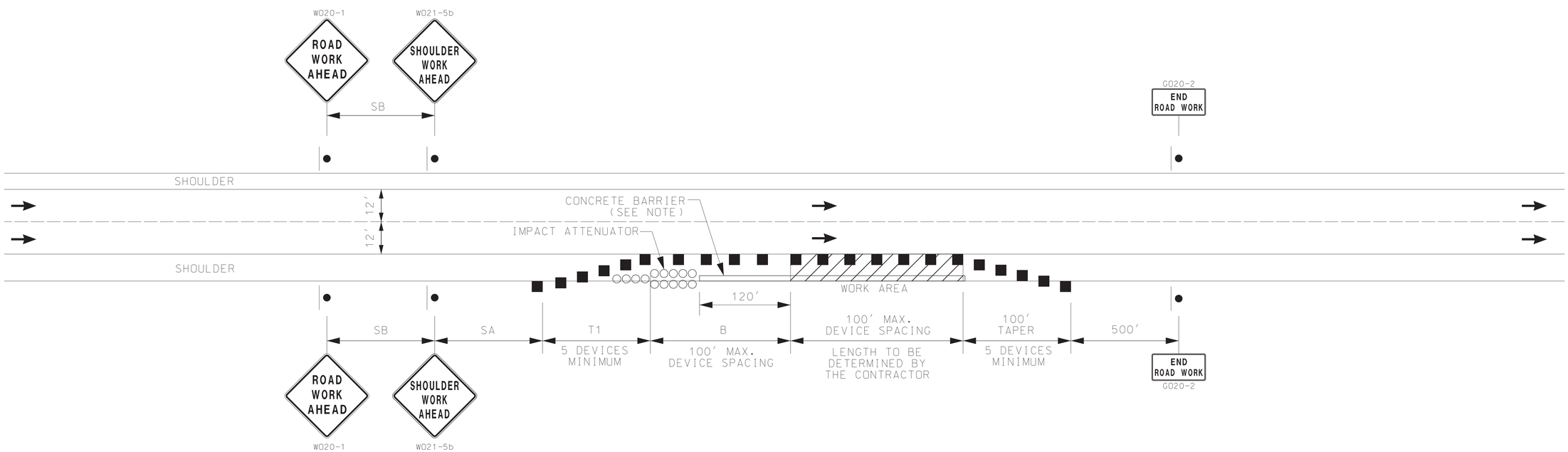

SHOULDER CLOSURE

NOTE: THE DRILLED SHAFT FOUNDATION AND RELOCATED DMS MI070E222.5S MUST BE PROTECTED BY TEMPORARY TRAFFIC BARRIER AND CRASH ATTENUATOR UNTIL TEMPORARY TRAFFIC BARRIER CLOSING THE OUTSIDE LANE IS INSTALLED BY ROADWAY PROJECT J6I2412.

TRAFFIC CONTROL DETAIL
SHEET 2 OF 2

STATE OF MISSOURI
CHARLES A. MILLER
NUMBER E-2002000606
REGISTERED PROFESSIONAL ENGINEER

THIS SHEET HAS BEEN SIGNED, SEALED, AND DATED ELECTRONICALLY.

DATE PREPARED: 16-NOV-2012

ROUTE	STATE
I-70	MO
DISTRICT: SL	SHEET NO.: 51

COUNTY: ST. CHARLES
JOB NO.: J6I2412
CONTRACT ID.
PROJECT NO.
BRIDGE NO.

DATE	DESCRIPTION

MISSOURI HIGHWAYS AND TRANSPORTATION COMMISSION
105 WEST CAPITOL
JEFFERSON CITY, MO 65102
1-888-ASK-MODOT (1-888-275-6636)

HNTB
715 KIRK DRIVE
KANSAS CITY, MO 64105
(816) 472-1201

IF A SEAL IS PRESENT ON THIS SHEET IT HAS BEEN ELECTRONICALLY SEALED AND DATED.

REV.

\\kcow00\jobs4\50299\DS005\ITS\Drawings\CD\Plans\051_TC2_J6I2412_i100.dgn 10:52 AM 16-NOV-2012