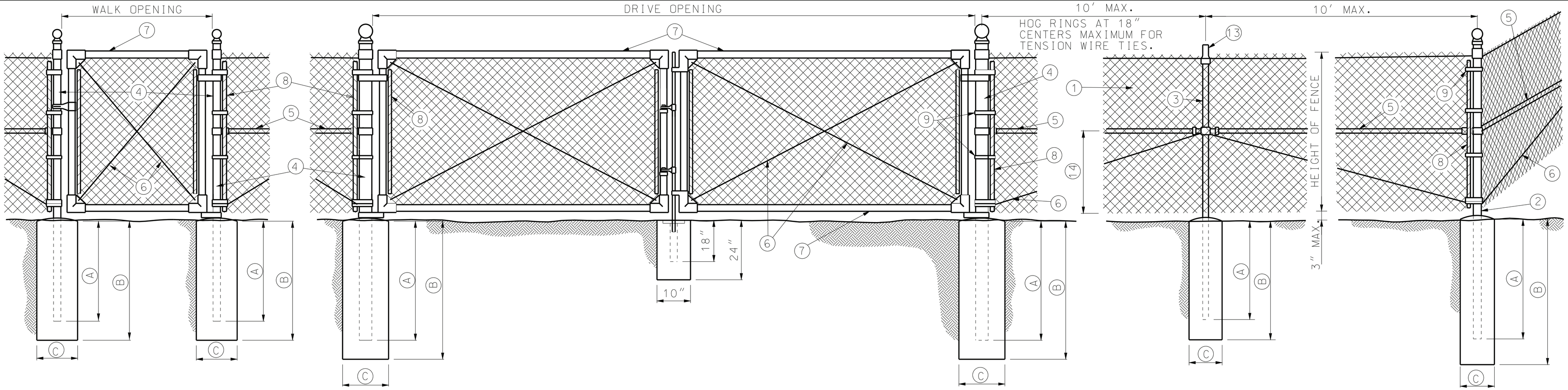

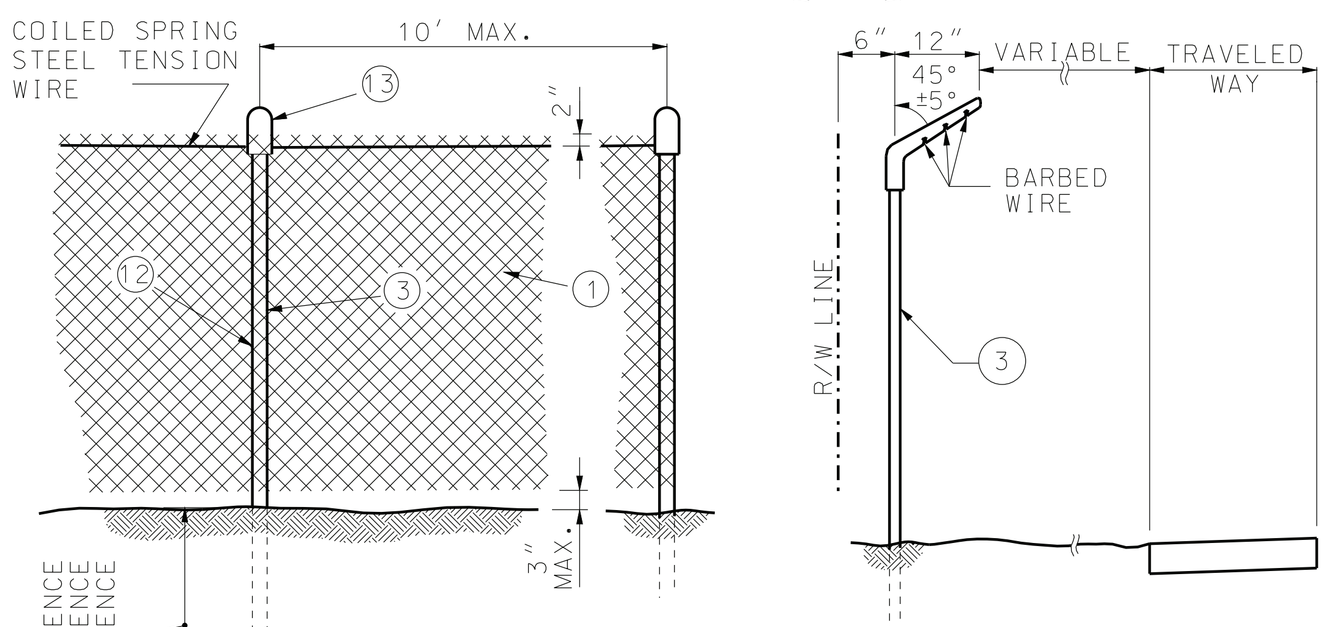

NOTE: IF POSTS CANNOT BE DRIVEN TO DEPTHS INDICATED BECAUSE OF ROCKY SOILS OR OTHER CONDITIONS, THEY SHALL BE REMOVED AND RE-PLACED IN FOOTINGS. POST TOPS SHALL BE PROTECTED AGAINST DAMAGE AND ALL POSTS WHICH ARE DAMAGED DURING INSTALLATION SHALL BE REMOVED AND REPLACED.

ALTERNATE LINE POST ANCHORAGE (DRIVEN)

BARBED WIRE EXTENSION BRACKET

MINIMUM DEPTH FOR SETTING POSTS

DESCRIPTION		HEIGHT OF FENCE 48" SIZE (IN.)	60" SIZE (IN.)	72" SIZE (IN.)
② ENDCORNER & PULLPOST	Ⓐ	30"	36"	36"
	Ⓑ	36"	42"	42"
	Ⓒ	10"	12"	12"
③ LINE POST	Ⓐ	24"	27"	36"
	Ⓑ	30"	36"	42"
	Ⓒ	10"	12"	12"
④ GATE POST	Ⓐ	30"	36"	36"
	Ⓑ	36"	42"	42"
	Ⓒ	10"	12"	12"

WIRE SIZE AND HEIGHT OF FABRIC

SPECIFIED DIAMETER INCHES	GAGE	MESH INCHES	HEIGHT OF FABRIC INCHES
0.120	11	2	36, 42
0.148	9	2	48, 60
0.192	6	2	72, 84

LEGEND

1. FABRIC
2. END, CORNER OR PULL POST
3. LINE POST
4. GATE POST
5. BRACE
6. TRUSS ROD
7. GATE FRAME
8. STRETCHER BAR $\frac{1}{4}$" X $\frac{3}{4}$" PLATE
9. STRETCHER BAR BAND
10. END OR CORNER CLAMP
11. POST TOPS (OTHER THAN LINE POSTS)
12. FABRIC TIES
13. LINE POST TOPS WITH OR WITHOUT TOP RAILS
14. ONE-HALF FABRIC HEIGHT OR AS RECOMMENDED BY MANUFACTURER

MINIMUM SIZE FOR FENCE HARDWARE

	WIDTH	SIZE (IN.)	LBS/FT.
② END CORNER OR PULL POST	N/A	$2\frac{1}{2}$ DIA.	5.79
③ LINE POST	N/A	2" DIA.	3.65
④ GATE POST (SINGLE GATE OR 1 LEAF OF DOUBLE)	≤ 6'	$2\frac{1}{2}$ DIA.	5.79
	≤ 13'	$3\frac{1}{2}$ DIA.	9.10
	≤ 18'	6 DIA.	18.97
	> 18'	8 DIA.	24.70
⑤ BRACE	N/A	$1\frac{1}{4}$ DIA.	2.27
⑥ TRUSS ROD	N/A	$\frac{3}{8}$	–
⑦ GATE FRAME	N/A	$1\frac{1}{2}$ DIA.	2.72

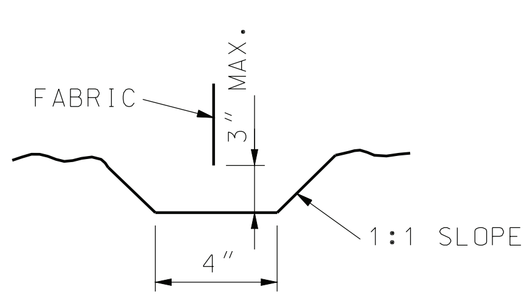

TYPICAL TRENCH DETAILS

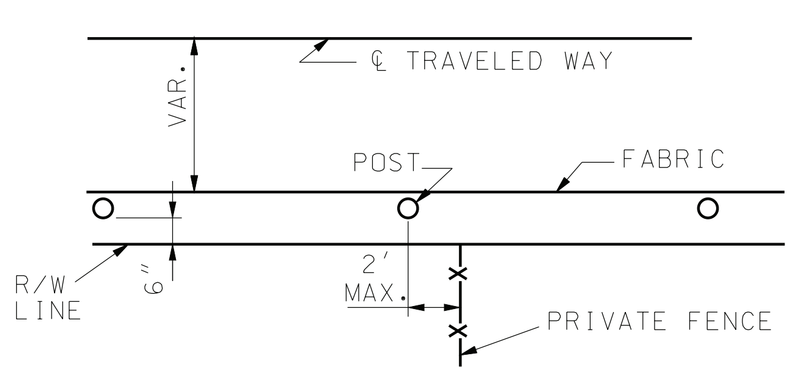

TYPICAL LOCATION

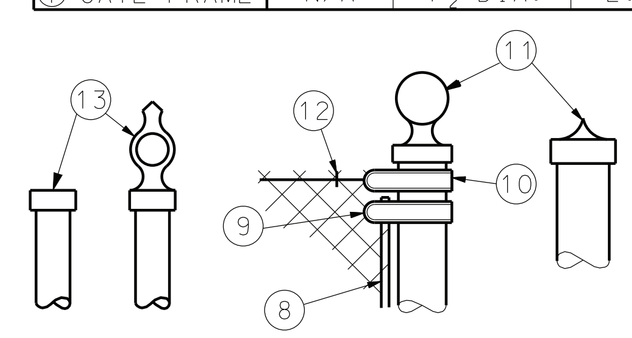

POST TOPS TO BE PRESSURE FITTED OR SCREWED. POST TOPS MAY BE ELIMINATED FOR ALL POSTS EXCEPT PIPE POSTS. IF POST TOPS ARE ELIMINATED, POST LENGTH SHALL BE INCREASED 3".

POST TOPS

GENERAL NOTES:

WEIGHTS OF MATERIALS SHOWN IN TABLE ARE FOR ASTM F 1043, GROUP IA. SIZES SHOWN ARE FOR STEEL AND ALUMINUM. EQUIVALENT ASTM F 1043 ALTERNATIVES MAY BE USED.

PULL POSTS SHALL BE USED AT SHARP BREAKS IN VERTICAL GRADE OR AT APPROXIMATE 500' CENTERS ON STRAIGHT RUNS OR AS DIRECTED BY THE ENGINEER.

DRILLED HOLES © IN SOLID ROCK SHALL PROVIDE A DIAMETER OF NOT LESS THAN 2" GREATER THAN THE MAXIMUM TRANSVERSE DIMENSION OF THE POST SECTION.

ALL POSTS SHALL HAVE PROVISIONS TO SECURELY HOLD THE TOP TENSION WIRE IN POSITION AND ALLOW FOR REMOVAL AND REPLACEMENT OF A POST WITHOUT DAMAGING THE TOP TENSION WIRE.

THE MESH SIZE SHALL BE 2 INCHES $\pm\frac{1}{8}$ IN. MEASURED IN EITHER DIRECTION AS THE MINIMUM CLEAR DISTANCE BETWEEN THE WIRES FORMING THE PARALLEL SIDES OF THE MESH.

MISSOURI HIGHWAYS AND TRANSPORTATION COMMISSION
105 WEST CAPITOL
JEFFERSON CITY, MO 65102
1-888-ASK-MODOT (1-888-275-6636)

STATE OF MISSOURI
KATHRYN PHILLIPS HARVEY
NUMBER PE-23751
PROFESSIONAL ENGINEER
THIS SHEET HAS BEEN SIGNED, SEALED AND DATED ELECTRONICALLY.

CHAIN-LINK FENCE

DATE EFFECTIVE: 02/01/2007
DATE PREPARED: 8/21/2009

607.10V

SHEET NO. 1 OF 1

IF A SEAL IS PRESENT ON THIS SHEET IT HAS BEEN ELECTRONICALLY SEALED AND DATED.