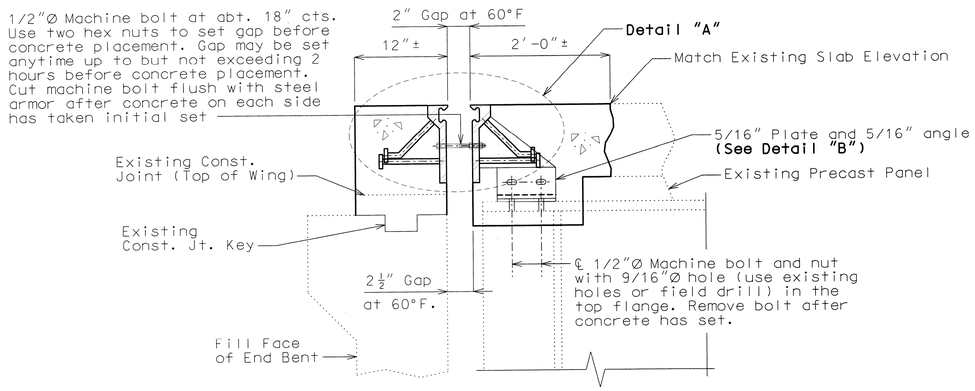

Note: Strip seal gland not shown for clarity.

SECTION A-A

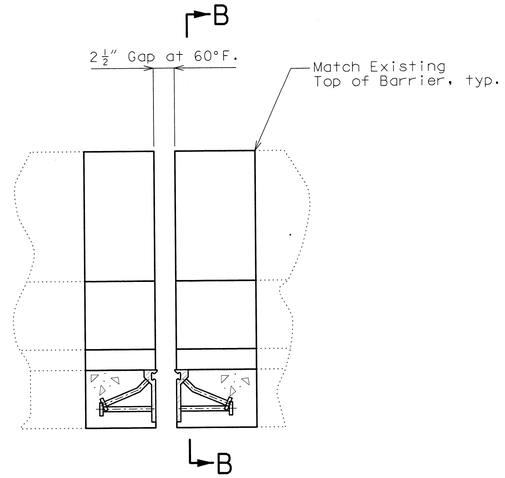

Note: Strip seal gland not shown for clarity.

PART ELEVATION OF BARRIER CURB

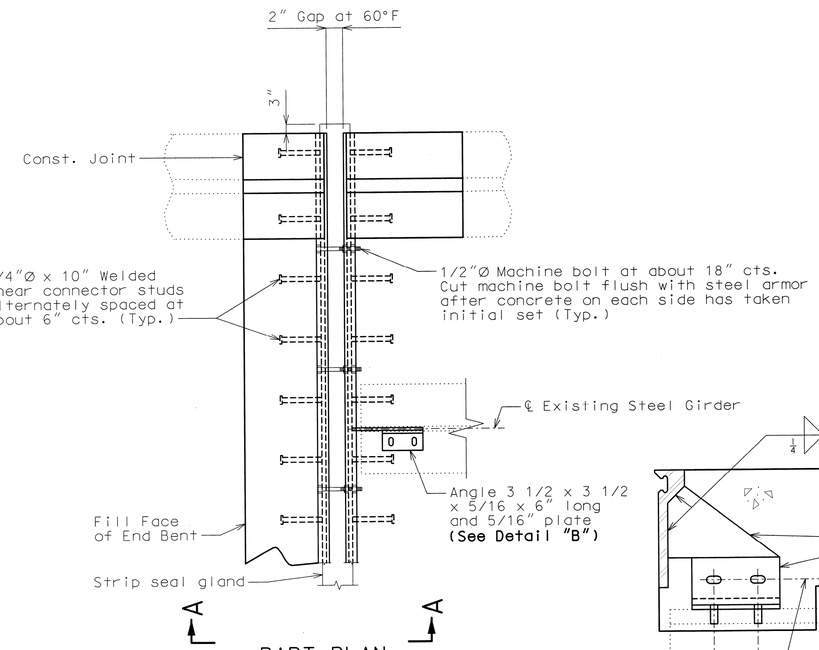

PART PLAN

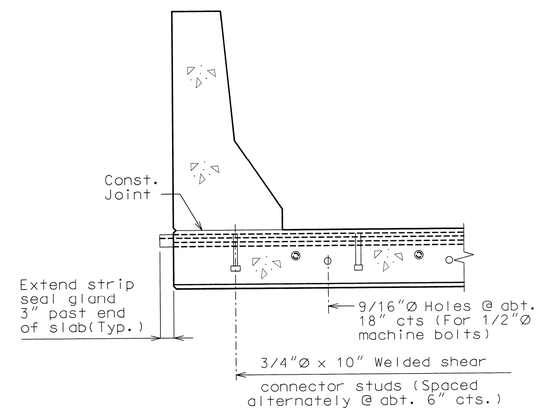

PART SECTION B-B

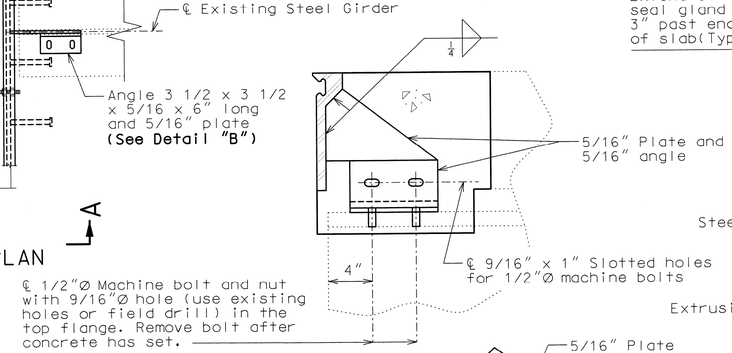

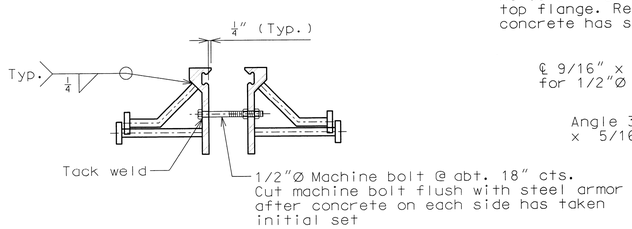

DETAIL "A"

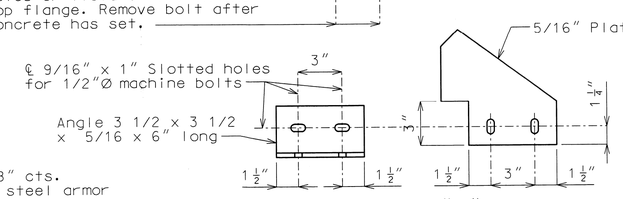

DETAIL "B"

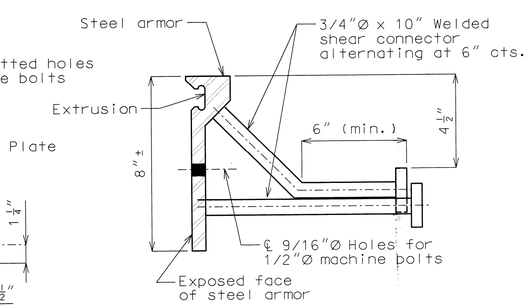

DETAIL OF JOINT ARMOR

DETAIL OF GLAND

GENERAL NOTES:

Expansion joint system shall be fabricated in one section, except for stage construction and when the length is over 50 feet. A complete joint penetration groove welded splice shall be required. Welds shall be ground flush to provide a smooth surface. The expansion joint system shall be fabricated and installed to the crown and grade of the roadway.

The strip seal gland shall be installed in joints in one continuous piece without field splices. Factory splicing will be permitted for joints in excess of 53 feet.

Structural steel for the expansion joint system shall be ASTM A709 Grade 36 except the steel armor may be ASTM A709 Grade 50W. Anchors for the expansion joint system shall be in accordance with Sec 1037. Strip seal expansion joint system shall be in accordance with Sec 717.

Structural steel for the expansion joint system shall be coated with a minimum of two coats of inorganic zinc primer (5 mils minimum) or galvanized in accordance with ASTM A123. Anchors need not be protected from overspray.

Plan dimensions are based on installation at 60°F. The expansion gap and other dimensions shall be increased or decreased 3/16 " for each 10° fall or rise in temperature at installation.

Concrete shall be forced under and around steel armor and anchors. Proper consolidation of the concrete shall be achieved by localized internal vibration.

DETAILS OF STRIP SEAL AT END BENT NO.1

Note: This drawing is not to scale. Follow dimensions.

Sheet No. 2 of 2

Designed: RKA
Detailed: TPL
Checked: MAB

STATE OF MISSOURI THOMAS P. LEMMON NUMBER PE-2003026771 PROFESSIONAL ENGINEER
9-21-2011

DATE PREPARED	9/21/2011
ROUTE	30
STATE	MO
DISTRICT	BR
SHEET NO.	2
COUNTY	FRANKLIN
JOB NO.	J6P2354
CONTRACT ID.	
PROJECT NO.	
BRIDGE NO.	A49751

DATE	DESCRIPTION

MISSOURI HIGHWAYS AND TRANSPORTION COMMISSION
105 WEST CAPITOL
JEFFERSON CITY, MO 65102
1-888-ASK-MODOT (1-888-275-6636)

HORNER & SHIFRIN, INC. ENGINEERS
5200 OAKLAND AVE. ST. LOUIS, MO 63110-1490
314-533-1600 FAX 314-533-1666
www.HornerShifrin.com
Disciplines: Professional Engineering
Firm Number: A-0000 Expiration Date: 12/31/2012
Firm Number: E-2000 Expiration Date: December 31, 2012