EXHBIT C- PLANS

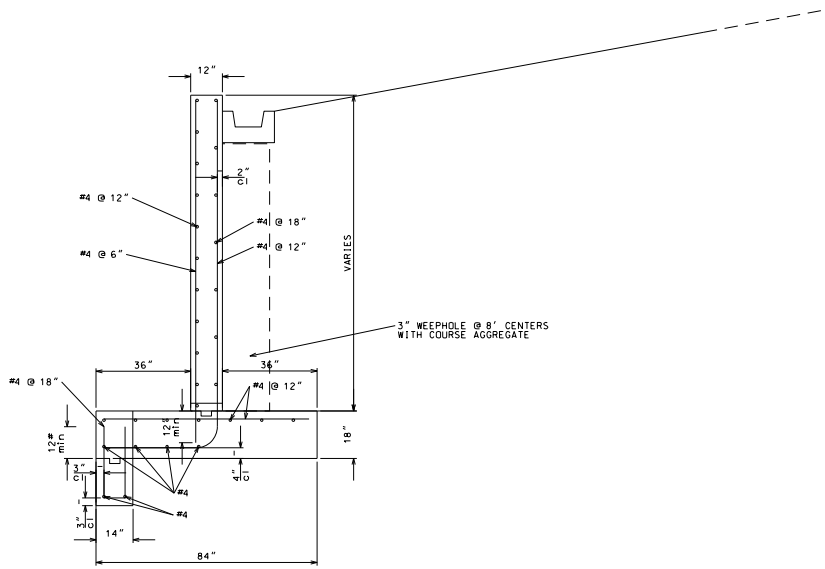

NOTE:
MINIMUM CLEARANCE TO ALL REINFORCEMENT SHALL BE 1-½" UNLESS OTHERWISE SHOWN
DRAINAGE MUST BE PROVIDED FOR GRANULAR BACKFILL
PHI ANGLE OF BACKFILL = 27 DEGREES
F'c = 3000 PSI
Fy = 60000 PSI

NOT TO SCALE

DATE	
DATE PREPARED	
ROUTE 270	STATE MO
DISTRICT 6	SHEET NO. 2
COUNTY ST LOUIS	
JOB NO.	
CONTRACT ID.	
PROJECT NO.	
BRIDGE NO.	

DESCRIPTION	DATE

MISSOURI HIGHWAYS AND TRANSPORTATION COMMISSION
105 WEST CAPITOL
JEFFERSON CITY, MO 65102
1-888-ASK-MODOT (1-888-275-6636)

TYPICAL SECTION

IF A SEAL IS PRESENT ON THIS SHEET IT HAS BEEN ELECTRONICALLY SEALED AND DATED.

REV.

002_TS_A376Wall.dgn 8:01:37 AM 7/7/2011

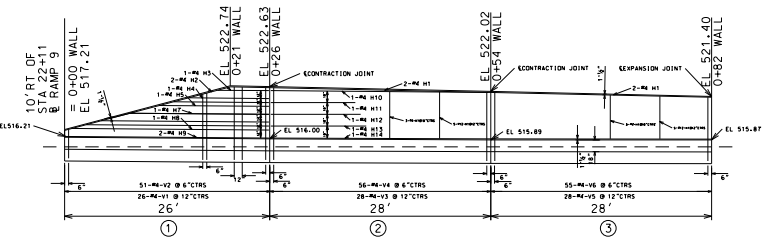

ELEVATION SHOWING WALL STEEL

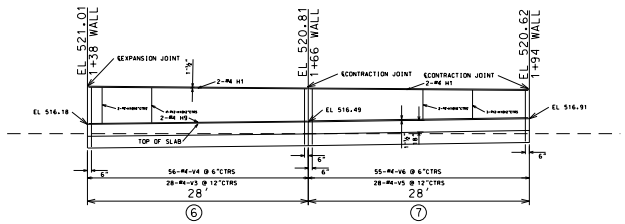

ELEVATION SHOWING WALL STEEL

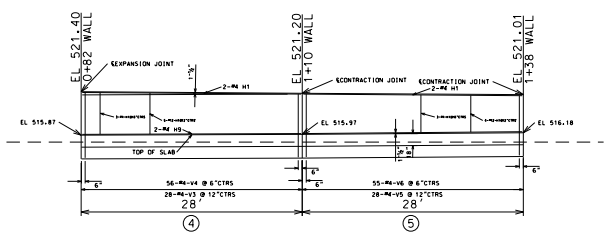

ELEVATION SHOWING WALL STEEL

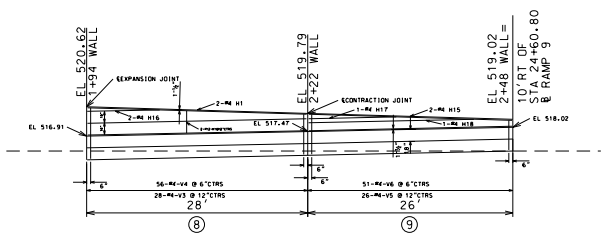

ELEVATION SHOWING WALL STEEL

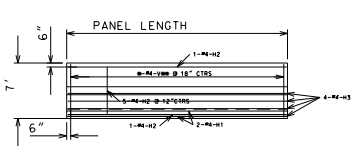

TYPICAL PLAN SHOWING FOOTING STEEL

NOT TO SCALE

DATE
DATE PREPARED

ROUTE	STATE
270	MO
DISTRICT	SHEET NO.
6	4

COUNTY: ST LOUIS

JOB NO.

CONTRACT ID.

PROJECT NO.

BRIDGE NO.

DATE	DESCRIPTION

MISSOURI HIGHWAYS AND TRANSPORTATION COMMISSION

105 WEST CAPITOL
JEFFERSON CITY, MO 65102
1-888-ASK-MODOT (1-888-275-6636)

PLAN SHEET

IF A SEAL IS PRESENT ON THIS SHEET IT HAS BEEN ELECTRONICALLY SEALED AND DATED.

REV.

004_PL_A376Wall.dgn 8:02:39 AM 7/7/2011

SEC/SUR 131 TWP 46N RGE 5E

MISSOURI HIGHWAYS AND TRANSPORTATION COMMISSION

General Notes:

Design Specifications:
2002 - AASHTO 17th Edition
Load Factor Design
Seismic Performance Category A

Design Loading:
Earth - 120#/Cu. Ft., Equivalent Fluid Pressure 45#/Cu. Ft.
Ø = 27°

Design Unit Stresses:
Class B Concrete (Retaining Wall) f'c = 3,000 psi
Reinforcing Steel (Grade 60) fy = 60,000 psi

Joint Filler:
All joint filler shall be in accordance with Sec 1057 for preformed sponge rubber expansion and partition joint filler, except as noted.

Reinforcing Steel:
Minimum clearance to reinforcing steel shall be 1-1/2", unless otherwise shown.

Traffic Control:
See roadway plans for traffic control plan (Roadway Item).

Miscellaneous:
"Sec" refers to the sections in the standard and supplemental specifications unless specified otherwise.

Any excavation above the bottom of existing footing and up to temporary shoring will be considered completely covered by the contract unit price for Removal of Wall.

Estimated Quantities

Item		Total
Class 1 Excavation	cu. yard	435
Temporary Shoring	lump sum	1
Removal of Wall	lump sum	1
Class B Concrete (Retaining Wall)	cu. yard	153.8
Reinforcing Steel (Epoxy Coated)	pound	9,150

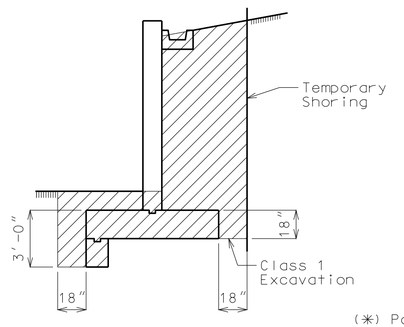

LIMITS OF CLASS 1 EXCAVATION

(*) Porous aggregate full length of wall. (See Standard Spec 206.4.10)

Cost of porous aggregate is included in the contract unit price for other items.

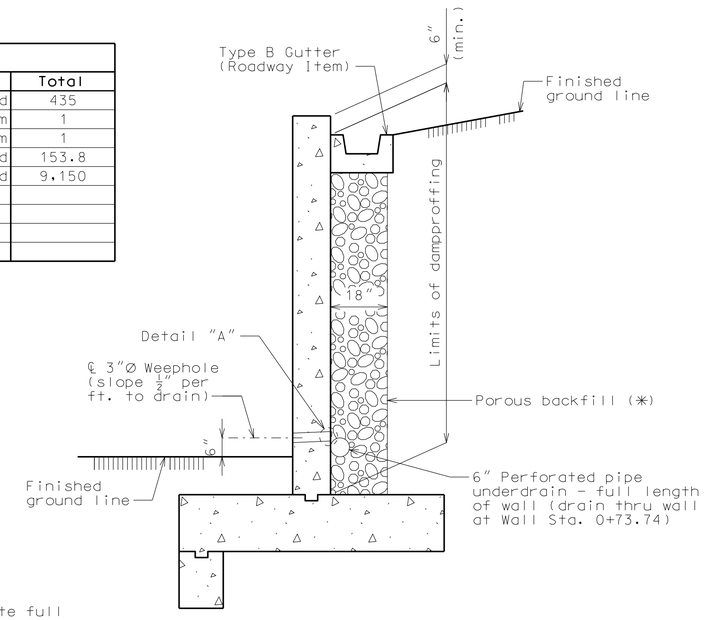

TYPICAL SECTION THRU WALL

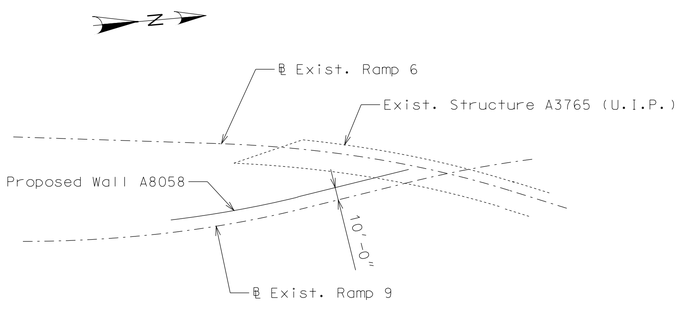

LOCATION SKETCH

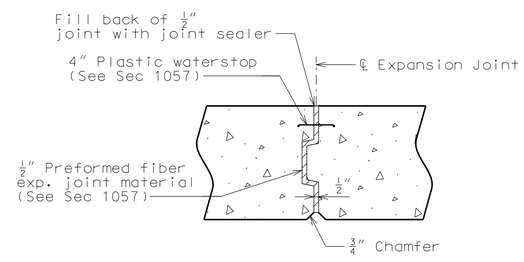

SECTION THRU EXPANSION JOINT

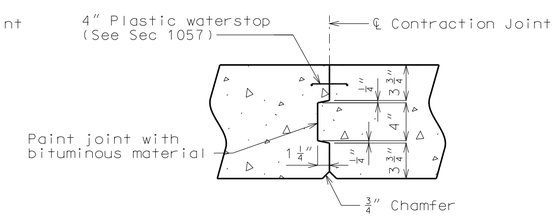

SECTION THRU CONTRACTION JOINT

Foundation Data

Spread Footing	Foundation Material	Clay
	Design Bearing ksf	2

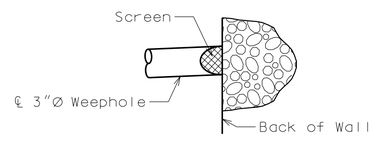

DETAIL "A"

B.M. #1 "□" ON CONC. BASE OF SIGN POST, 9' LT. OF STA. 0+00 ℄ i-270 N., ELEV. 530.38

RETAINING WALL 10' RIGHT OF ℄ OF RAMP 9

STATE ROAD AT I-70 AND I-270 INTERCHANGE

ABOUT 2.7 MILES EAST OF MISSOURI RIVER

STA. 22+11 ℄ RAMP 9

Designed July 2011
Detailed July 2011
Checked July 2011

Note: This drawing is not to scale. Follow dimensions.

Sheet No. 1 of 4

"THIS MEDIA SHOULD NOT BE CONSIDERED A CERTIFIED DOCUMENT."

DATE PREPARED	7/21/2011
ROUTE	I-270
STATE	MO
DISTRICT	BR
SHEET NO.	1
COUNTY	ST. LOUIS
JOB NO.	J6P2354
CONTRACT ID.	
PROJECT NO.	
BRIDGE NO.	A8058

DESCRIPTION

DATE

MISSOURI HIGHWAYS AND TRANSPORTATION COMMISSION

105 WEST CAPITOL
JEFFERSON CITY, MO 65102
1-888-ASK-MODOT (1-888-275-6636)

IF A SEAL IS PRESENT ON THIS SHEET IT HAS BEEN ELECTRONICALLY SEALED AND DATED.

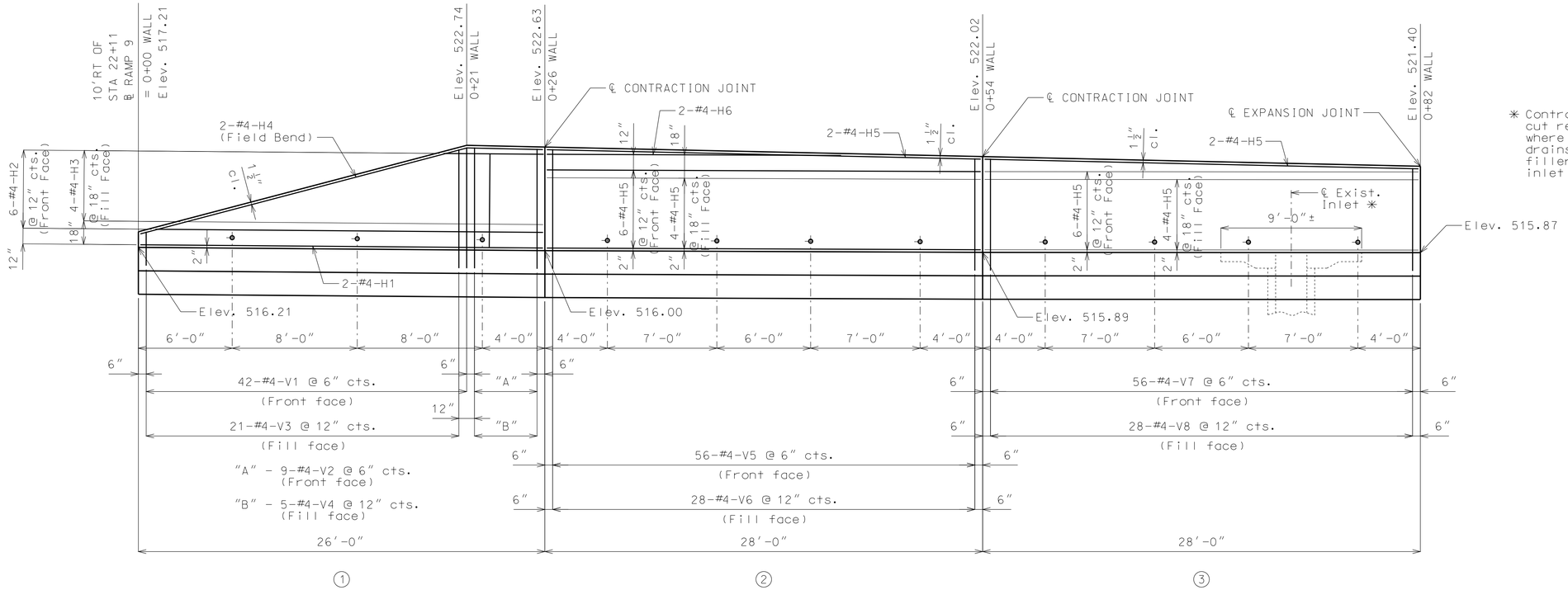

✳ Contracor may shift and or cut reinforcement in field where neccessary to clear drains. Place 1/2" joint filler around exist. drop inlet as bond breaker.

PART ELEVATION SHOWING WALL STEEL

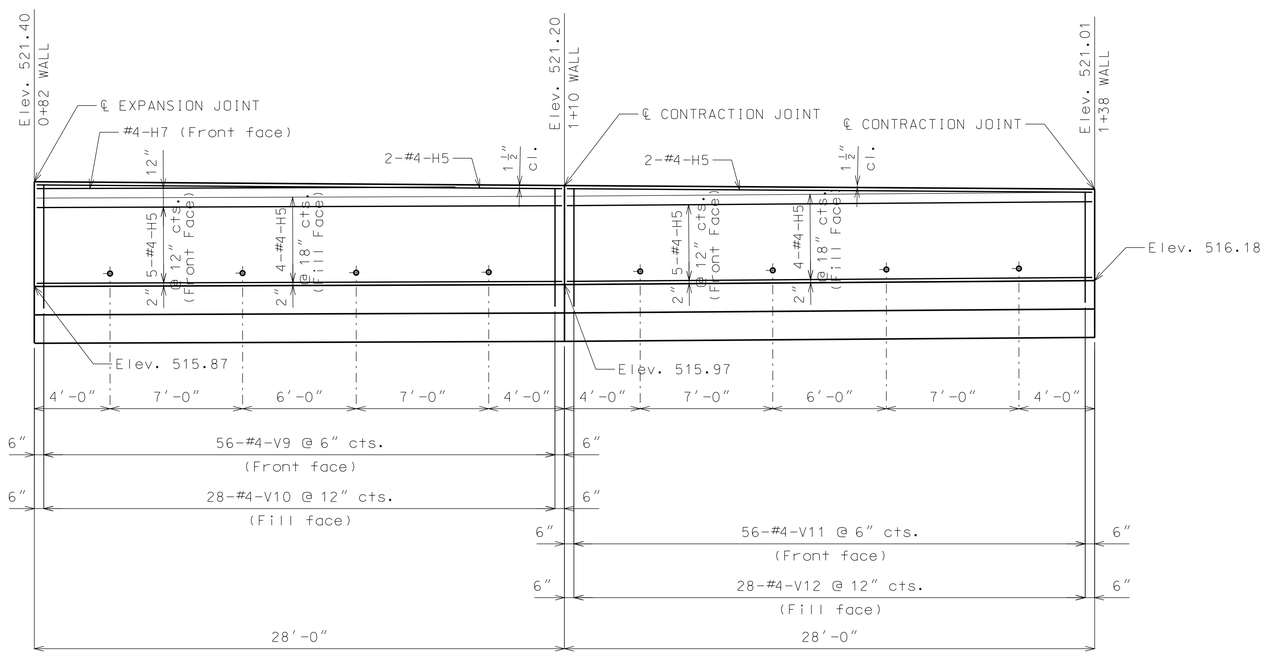

PART ELEVATION SHOWING WALL STEEL

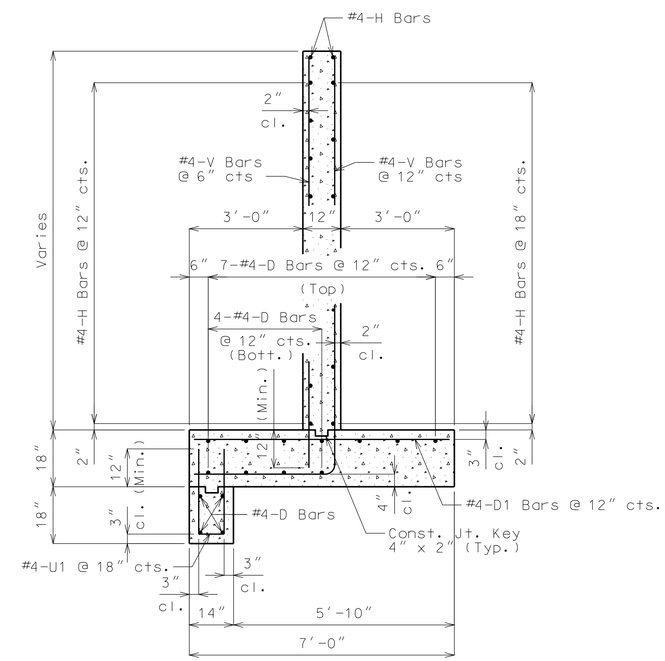

TYPICAL SECTION THRU WALL

Detailed July 2011
Checked July 2011

Note: This drawing is not to scale. Follow dimensions.

Sheet No. 2 of 4

"THIS MEDIA SHOULD NOT BE CONSIDERED A CERTIFIED DOCUMENT."

DATE PREPARED	
7/21/2011	
ROUTE	STATE
I-270	MO
DISTRICT	SHEET NO.
BR	2
COUNTY	
ST. LOUIS	
JOB NO.	
J6P2354	
CONTRACT ID.	
PROJECT NO.	
BRIDGE NO.	
A8058	

DATE	DESCRIPTION

MISSOURI HIGHWAYS AND TRANSPORTATION COMMISSION

105 WEST CAPITOL
JEFFERSON CITY, MO 65102
1-888-ASK-MODOT (1-888-275-6636)

IF A SEAL IS PRESENT ON THIS SHEET IT HAS BEEN ELECTRONICALLY SEALED AND DATED.

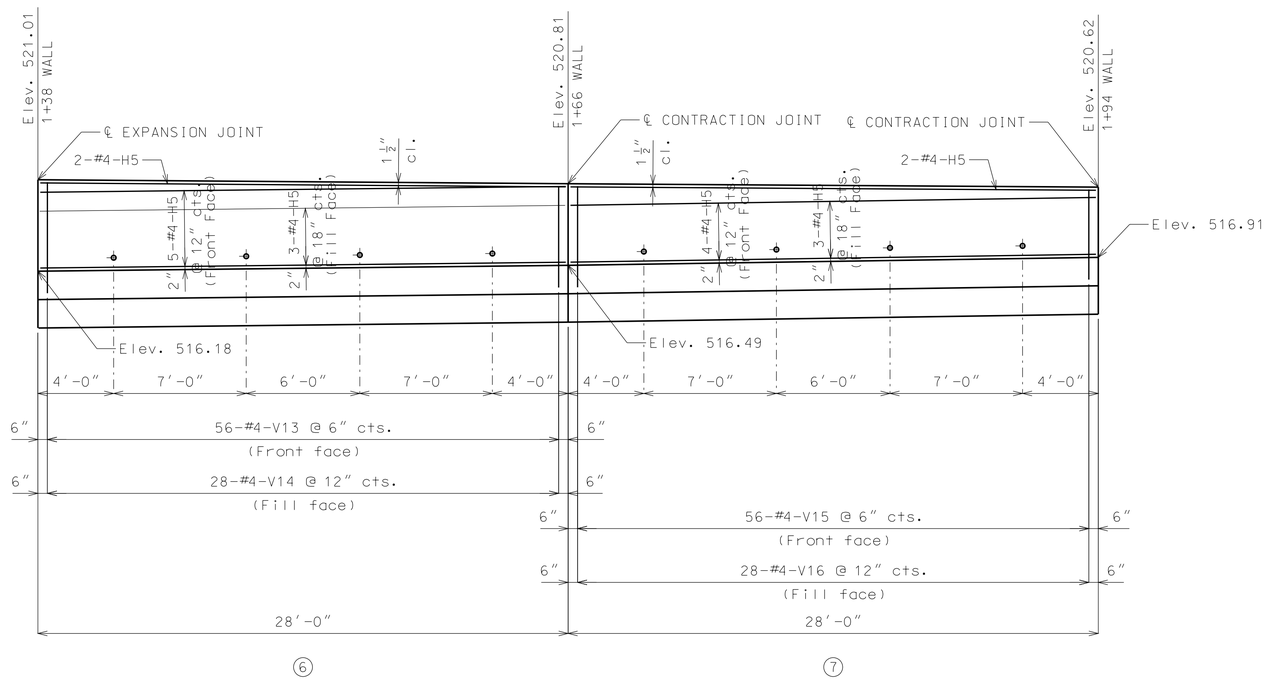

PART ELEVATION SHOWING WALL STEEL

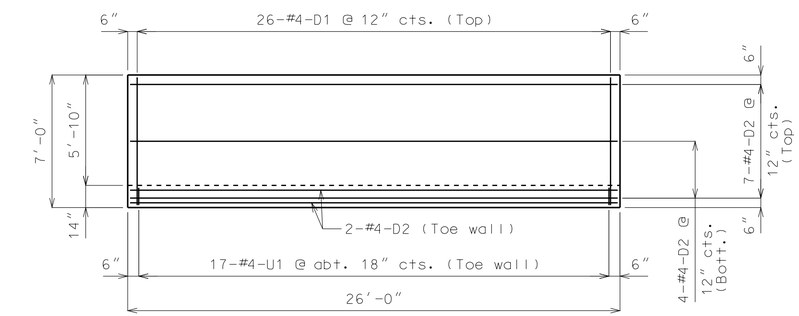

PLAN OF FOOTING FOR WALL UNITS ① & ⑨
SHOWING REINFORCEMENT

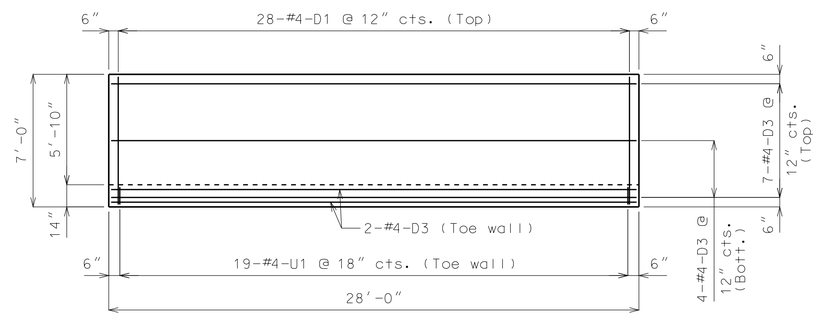

PLAN OF FOOTING FOR WALL UNITS ②, ③, ④,
⑤, ⑥, ⑦ & ⑧ SHOWING REINFORCEMENT

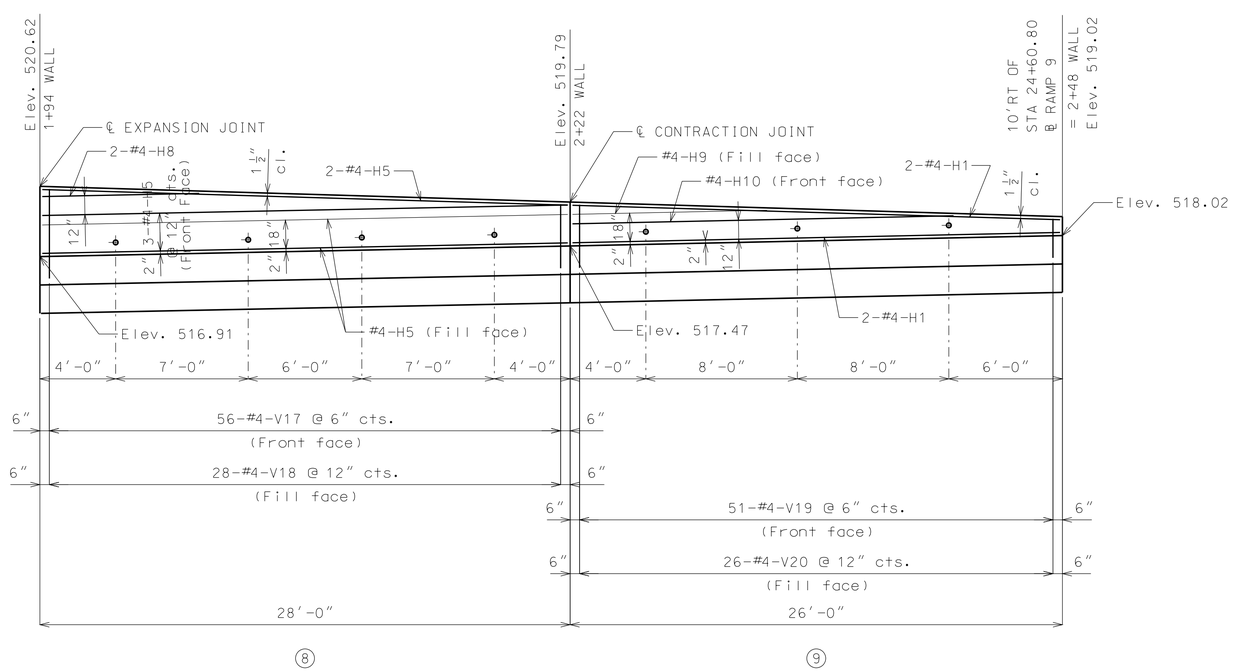

PART ELEVATION SHOWING WALL STEEL

Detailed July 2011
Checked July 2011

Note: This drawing is not to scale. Follow dimensions.

"THIS MEDIA SHOULD NOT BE CONSIDERED A CERTIFIED DOCUMENT."

DATE PREPARED	7/21/2011
ROUTE	I-270
STATE	MO
DISTRICT	BR
SHEET NO.	3
COUNTY	ST. LOUIS
JOB NO.	J6P2354
CONTRACT ID.	
PROJECT NO.	
BRIDGE NO.	A8058

DATE	DESCRIPTION

MISSOURI HIGHWAYS AND TRANSPORTATION COMMISSION

105 WEST CAPITOL
JEFFERSON CITY, MO 65102
1-888-ASK-MODOT (1-888-275-6636)

IF A SEAL IS PRESENT ON THIS SHEET IT HAS BEEN ELECTRONICALLY SEALED AND DATED.

BILL OF REINFORCING STEEL

NO. REQ'D.	MARK NO. SIZE	MARK NO. MARK	LOCATION	EPOXY (E)	SHAPE NO.	STIRRUP (S)	SUBSTR. (X)	VARIES (V)	NO. EACH	B FT.	B IN.	C FT.	C IN.	D FT.	D IN.	E FT.	E IN.	F FT.	F IN.	H FT.	H IN.	K FT.	K IN.	NOMINAL LENGTH FT.	NOMINAL LENGTH IN.	ACTUAL LENGTH FT.	ACTUAL LENGTH IN.	WEIGHT LBS.
			FOOTING																									
248	4	D1	FOOTING	E	20					6	8.000													6	8	6	8	1104
32	4	D2	FOOTING	E	20					25	9.000													25	9	25	9	550
105	4	D3	FOOTING	E	20					27	9.000													27	9	27	9	1946
167	4	U1	FOOTING	E	10	S						2	3.000	8.000										5	2	5	0	558
			WALL																									
6	4	H1	WALL	E	20					25	9.000													25	9	25	9	103
6	4	H2	WALL	E	20			V	1	24	9.000													24	9	24	9	
			INCREMENT =							6	4.000													6	4	6	4	62
			44.250 INCH																									
4	4	H3	WALL	E	20			V	1	22	11.000													22	11	22	11	
			INCREMENT =							6	4.000													6	4	6	4	39
			66.375 INCH																									
2	4	H4	WALL	E	20					26	5.000													26	5	26	5	35
72	4	H5	WALL	E	20					27	9.000													27	9	27	9	1335
2	4	H6	WALL	E	20					18	9.000													18	9	18	9	25
1	4	H7	WALL	E	20					22	1.000													22	1	22	1	15
2	4	H8	WALL	E	20					8	3.000													8	3	8	3	11
1	4	H9	WALL	E	20					10	3.000													10	3	10	3	7
1	4	H10	WALL	E	20					20	1.000													20	1	20	1	13
42	4	V1	WALL	E	20			V	1	2	0.000													2	0	2	0	
			INCREMENT =							7	7.000													7	7	7	7	134
			1.625 INCH																									
9	4	V2	WALL	E	20					7	7.000													7	7	7	7	46
21	4	V3	WALL	E	19	S		V	1	2	0.000	4	0.000											6	0	5	11	
			INCREMENT =							7	7.000	4	0.000											11	7	11	6	122
			3.375 INCH																									
5	4	V4	WALL	E	19	S				7	8.000	4	0.000											11	8	11	7	39
56	4	V5	WALL	E	20			V	1	7	6.000													7	6	7	6	
			INCREMENT =							7	0.000													7	0	7	0	271
			0.125 INCH																									
28	4	V6	WALL	E	19	S		V	1	7	8.000	4	0.000											11	8	11	7	
			INCREMENT =							7	2.000	4	0.000											11	2	11	1	212
			0.250 INCH																									
56	4	V7	WALL	E	20			V	1	7	0.000													7	0	7	0	
			INCREMENT =							6	5.000													6	5	6	5	251
			0.125 INCH																									
28	4	V8	WALL	E	19	S		V	1	7	2.000	4	0.000											11	2	11	1	
			INCREMENT =							6	7.000	4	0.000											10	7	10	6	202
			0.250 INCH																									
56	4	V9	WALL	E	20			V	1	6	5.000													6	5	6	5	
			INCREMENT =							6	2.000													6	2	6	2	235
28	4	V10	WALL	E	19	S		V	1	6	6.750	4	0.000											10	7	10	6	
			INCREMENT =							6	3.500	4	0.000											10	4	10	3	194
			0.125 INCH																									
56	4	V11	WALL	E	20			V	1	6	1.000													6	1	6	1	
			INCREMENT =							5	8.000													5	8	5	8	220
			0.125 INCH																									
28	4	V12	WALL	E	19	S		V	1	6	3.000	4	0.000											10	3	10	2	
			INCREMENT =							5	10.500	4	0.000											9	11	9	10	187
			0.125 INCH																									

BILL OF REINFORCING STEEL

NO. REQ'D.	MARK NO. SIZE	MARK NO. MARK	LOCATION	EPOXY (E)	SHAPE NO.	STIRRUP (S)	SUBSTR. (X)	VARIES (V)	NO. EACH	B FT.	B IN.	C FT.	C IN.	D FT.	D IN.	E FT.	E IN.	F FT.	F IN.	H FT.	H IN.	K FT.	K IN.	NOMINAL LENGTH FT.	NOMINAL LENGTH IN.	ACTUAL LENGTH FT.	ACTUAL LENGTH IN.	WEIGHT LBS.
56	4	V13	WALL	E	20			V	1	5	9.000													5	9	5	9	
			INCREMENT =							5	3.000													5	3	5	3	206
			0.125 INCH																									
28	4	V14	WALL	E	19	S		V	1	5	10.500	4	0.000											9	11	9	10	
			INCREMENT =							5	4.500	4	0.000											9	5	9	4	179
			0.250 INCH																									
56	4	V15	WALL	E	20			V	1	5	2.000													5	2	5	2	
			INCREMENT =							4	7.000													4	7	4	7	182
			0.125 INCH																									
28	4	V16	WALL	E	19	S		V	1	5	4.000	4	0.000											9	4	9	3	
			INCREMENT =							4	9.000	4	0.000											8	9	8	8	168
			0.250 INCH																									
56	4	V17	WALL	E	20			V	1	4	7.000													4	7	4	7	
			INCREMENT =							3	3.000													3	3	3	3	147
			0.250 INCH																									
28	4	V18	WALL	E	19	S		V	1	4	8.750	4	0.000											8	9	8	8	
			INCREMENT =							3	4.500	4	0.000											7	5	7	4	150
			0.625 INCH																									
51	4	V19	WALL	E	20			V	1	3	2.000													3	2	3	2	
			INCREMENT =							2	0.000													2	0	2	0	88
			0.250 INCH																									
26	4	V20	WALL	E	19	S		V	1	3	4.000	4	0.000											7	4	7	3	
			INCREMENT =							2	0.750	4	0.000											6	1	6	0	115
			0.625 INCH																									
			TOTALS																									
	4			E																								9151
			TOTAL																									0
			TOTAL	E																								9151

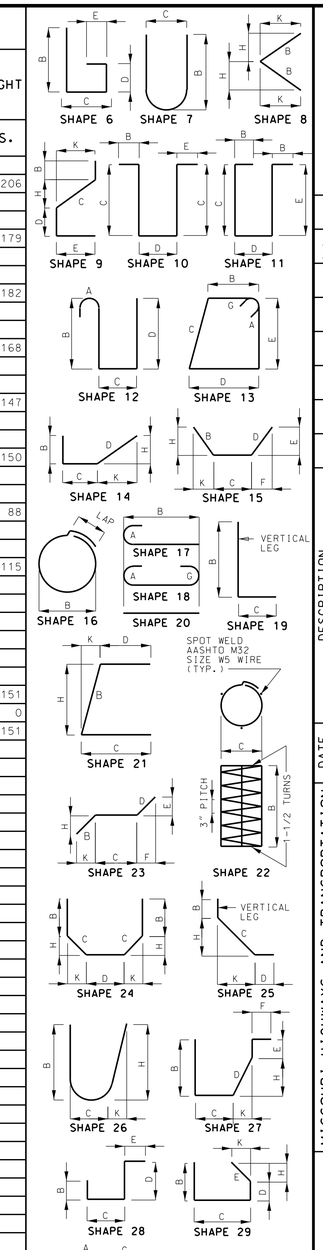

"THIS MEDIA SHOULD NOT BE CONSIDERED A CERTIFIED DOCUMENT."

DATE PREPARED	7/21/2011
ROUTE	I-270
STATE	MO
DISTRICT	BR
SHEET NO.	4
COUNTY	ST. LOUIS
JOB NO.	J6P2354
CONTRACT ID.	
PROJECT NO.	
BRIDGE NO.	A8058

DESCRIPTION

DATE

IF A SEAL IS PRESENT ON THIS SHEET IT HAS BEEN ELECTRONICALLY SEALED AND DATED.

MISSOURI HIGHWAYS AND TRANSPORTATION COMMISSION

105 WEST CAPITOL
JEFFERSON CITY, MO 65102
1-888-ASK-MODOT (1-888-275-6636)

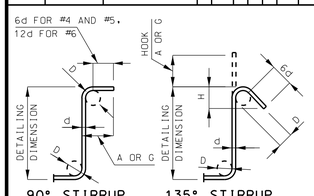

STIRRUP HOOK DIMENSIONS				
GRADES 40 - 50 - 60 KSI				
BAR SIZE	D (IN.)	90° HOOK	135° HOOK	
		HOOK A OR G	HOOK A OR G	APPROX. H
#4	2"	4 1/2"	4 1/2"	3"
#5	2 1/2"	6"	5 1/2"	3 3/4"
#6	4 1/2"	12"	8"	4 1/2"

NOTE: UNLESS OTHERWISE NOTED DIAMETER "D" IS THE SAME FOR ALL BENDS AND HOOKS ON A BAR.

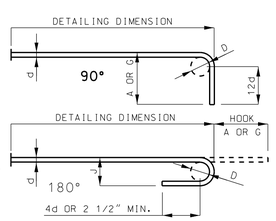

END HOOK DIMENSIONS				
BAR SIZE	D (IN.)	ALL GRADES		
		180° HOOKS		90° HOOKS
		A OR G	J	A OR G
#3	2 1/4"	5"	3"	6"
#4	3"	6"	4"	8"
#5	3 3/4"	7"	5"	10"
#6	4 1/2"	8"	6"	12"
#7	5 1/4"	10"	7"	14"
#8	6"	11"	8"	16"
#9	9 1/2"	15"	11 3/4"	19"
#10	10 3/4"	17"	13 1/4"	22"
#11	12"	19"	14 3/4"	2'-0"
#14	18 1/4"	2'-3"	21 3/4"	2'-7"

TWO ADDITIONAL #4-D2 ARE INCLUDED IN THE BAR BILL FOR TESTING.

NOTE:
ALL STANDARD HOOKS AND BENDS OTHER THAN 180 DEGREE ARE TO BE BENT WITH SAME PROCEDURE AS FOR 90 DEGREE STANDARD HOOKS.
HOOKS AND BENDS SHALL BE IN ACCORDANCE WITH THE PROCEDURES AS SHOWN ON THIS SHEET.
E = EPOXY COATED REINFORCEMENT.
S = STIRRUP.
X = BAR IS INCLUDED IN SUBSTRUCTURE QUANTITIES.
V = BAR DIMENSIONS VARY IN EQUAL INCREMENTS BETWEEN DIMENSIONS SHOWN ON THIS LINE AND THE FOLLOWING LINE.
NO. EA. = NUMBER OF BARS OF EACH LENGTH.
NOMINAL LENGTHS ARE BASED ON OUT TO OUT DIMENSIONS SHOWN IN BENDING DIAGRAMS AND ARE LISTED FOR FABRICATORS USE. (NEAREST INCH)
ACTUAL LENGTHS ARE MEASURED ALONG CENTERLINE BAR TO THE NEAREST INCH.
PAYWEIGHTS ARE BASED ON ACTUAL LENGTHS.
FOUR ANGLE OR CHANNEL SPACERS ARE REQUIRED FOR EACH COLUMN SPIRAL. SPACERS ARE TO BE PLACED ON INSIDE OF SPIRALS. LENGTH AND WEIGHT OF COLUMN SPIRALS DO NOT INCLUDE SPLICES OR SPACERS.
REINFORCING STEEL (GRADE 60) FY = 60,000 PSI.

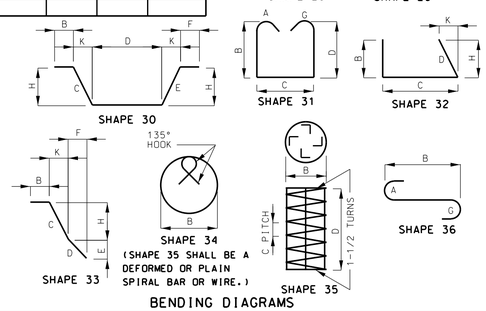

BENDING DIAGRAMS

Detailed July 2011
Checked July 2011

Note: This drawing is not to scale. Follow dimensions.