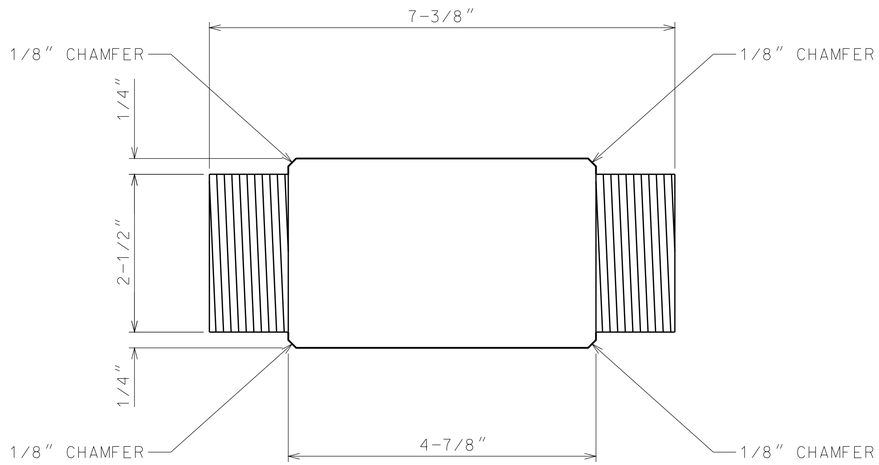

PIN DETAIL
(SIDE VIEW)

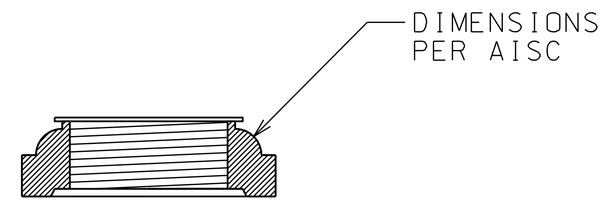

NUT DETAIL

PIN NOTES:

PIN TO BE AISI-C-1018

NEED NUT TO FIT PIN

NUT NOTES:

NUT TO BE CAST OR FORGED.

CASTINGS TO BE ASTM A27
GRADE 65-35 OR EQUAL.

FORGINGS TO BE ASTM A235,
CLASS E OR EQUAL.

NUT WILL NEED TO FIT PIN

STATE OF MISSOURI
KURT E. GRIBBLE
NUMBER PE-23576
PROFESSIONAL ENGINEER

THIS SHEET HAS BEEN SIGNED, SEALED AND DATED ELECTRONICALLY.

DATE PREPARED	
5/25/2011	
ROUTE	STATE
61	MO
DISTRICT	SHEET NO.
6	1
COUNTY	
LINCOLN	
JOB NO.	
CONTRACT ID.	
PROJECT NO.	
BRIDGE NO.	

DATE	DESCRIPTION

IF A SEAL IS PRESENT ON THIS SHEET IT HAS BEEN ELECTRONICALLY SEALED AND DATED.

MISSOURI HIGHWAYS AND TRANSPORTATION COMMISSION

105 WEST CAPITOL
JEFFERSON CITY, MO 65102
1-888-ASK-MODOT (1-888-275-6636)

BRIDGE PIN AND NUT
DETAIL
BR. A2601
SHEET 1 OF 1