Attachment A

IPM groove specification.

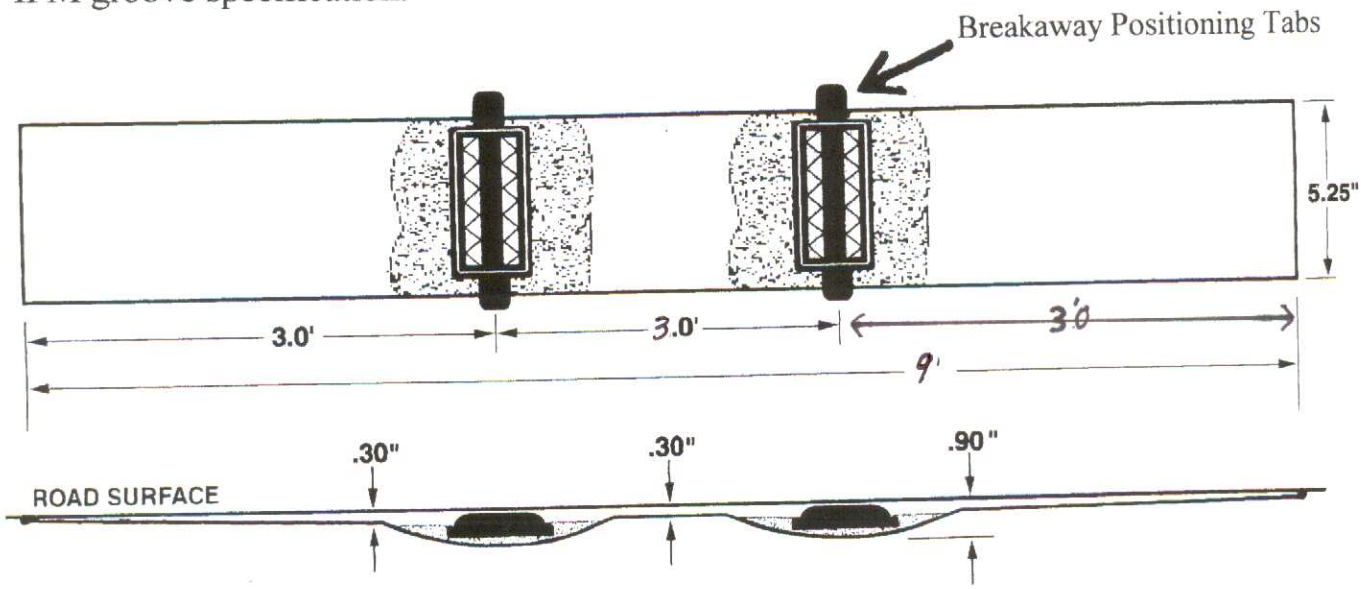

Attachment A

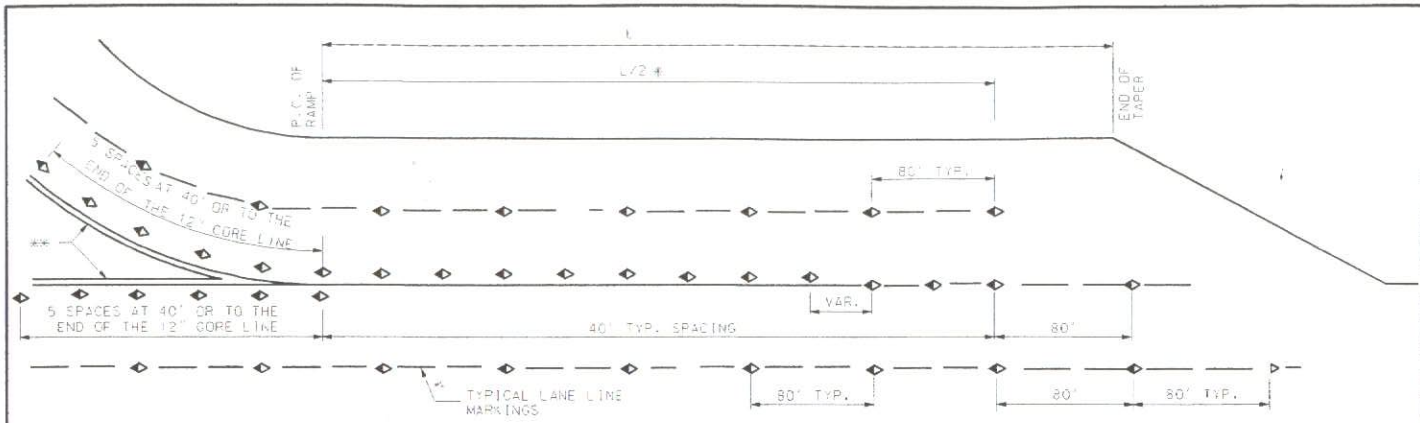

PARALLEL LANE EXIT RAMP (MULTI-LANE)

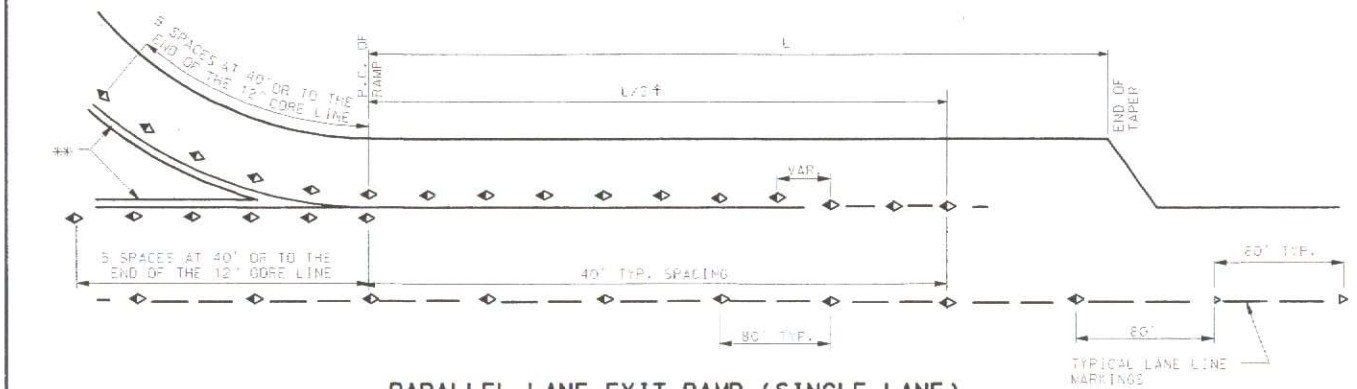

PARALLEL LANE EXIT RAMP (SINGLE LANE)

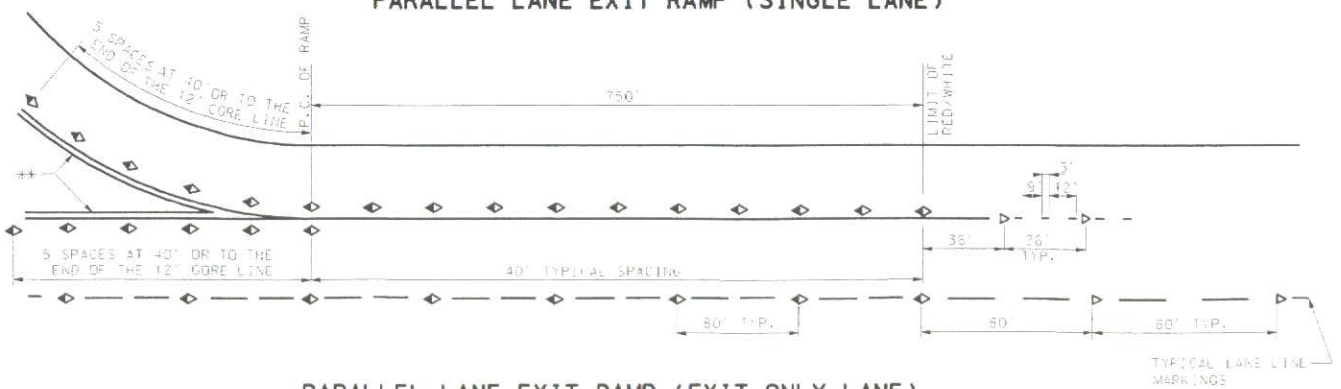

PARALLEL LANE EXIT RAMP (EXIT ONLY LANE)

◆ RED/WHITE IPM
▷ WHITE IMP
* LIMIT OF IPM'S
** 12" GORE LINE
IPM INLAID PAVEMENT MARKER

GENERAL NOTES:

ALL IPM'S ON DIAMOND INTERCHANGES SHALL BE RED/WHITE SPACED FROM 750 FEET UPSTREAM OF THE P.C. OF THE EXIT RAMP TO THE P.C. OF THE ENTRANCE RAMP, EXCEPT AS OTHERWISE SHOWN.

FOR HALF DIAMOND INTERCHANGE ENTRANCE RAMPS, PLACE THE RED/WHITE IPM'S ON ADJACENT LANES FROM THE GORE POINT TO 750 FEET UPSTREAM.

DIRECTIONAL INTERCHANGES DO NOT REQUIRE RED/WHITE IPM'S. HOWEVER, THE ENGINEER MAY ELECT TO INSTALL RED/WHITE MARKERS INSTEAD OF ONE-WAY WHITE IPM'S.

IPM'S INSTALLED NEXT TO A SOLID LINE SHALL BE PLACED A MINIMUM OF 2" AND A MAXIMUM OF 4" OFF THE LINE.

IPM'S INSTALLED FOR LANE LINE DELINEATION SHALL BE INSTALLED IN LINE WITH THE PAVEMENT MARKINGS AND PLACED IN THE CENTER OF THE GAP. LONGITUDINAL AND TRANSVERSE DEVIATIONS SHALL BE KEPT TO A MINIMUM. THE IPM'S SHALL BE INSTALLED SO THAT THEY ARE ALIGNED TRANSVERSELY.

IPM'S INSTALLED FOR LANE LINE MARKINGS ON MULTILANE EXIT RAMPS ARE TO BE TERMINATED APPROXIMATELY ADJACENT TO THE LAST MARKER INSTALLED IN THE GORE. INTERSTATE-INTERSTATE INTERCHANGES AND COLLECTOR DISTRIBUTORS ARE THE ONLY EXCEPTIONS. FOR INSTALLATION DIAGRAM SEE COLLECTOR DISTRIBUTOR EXIT RAMP ON SHEET 2 OF 4.

IPM'S SHALL BE PLACED IN THE FIRST GAP AFTER TRANSITIONING FROM A SOLID TO AN INTERMITTENT LANE LINE.

ENTRANCE AND EXIT RAMP IPM'S SHALL BE ALIGNED TRANSVERSELY WITH LANE LINE IPM'S WHEN MARKING THE TRANSITION TO THE 80 FOOT SPACING.

A LONGITUDINAL ADJUSTMENT TO THE LOCATION OF THE MARKER SHALL BE MADE IN ORDER TO AVOID DAMAGE TO DETERIORATED PAVEMENTS OR TRANSVERSE JOINTS.

IN LOCATIONS WHERE CONCRETE AND BITUMINOUS SURFACES ABUT, THE IPM SHALL BE INSTALLED IN THE CONCRETE SURFACE.

MARKERS SHALL BE OFFSET A MINIMUM OF 2" FROM LONGITUDINAL JOINT AND MINIMUM OF 3" FROM TRANSVERSE JOINT.

DRAWINGS ARE NOT TO SCALE.

INLAID PAVEMENT MARKERS

EXIT AND ENTRANCE RAMPS

SPECIAL SHEET 1 OF 2

THIS MEDIA SHOULD NOT BE CONSIDERED A CERTIFIED DOCUMENT.

DATE PREPARED 07/14/2009

ROUTE	STATE
	MO

DISTRICT | SHEET NO.

COUNTY

JOB NO.

CONTRACT ID.

PROJECT NO.

BRIDGE NO.

DATE	DESCRIPTION

MISSOURI HIGHWAYS AND TRANSPORTATION COMMISSION

MoDOT

105 WEST CAPITOL
JEFFERSON CITY, MO 65102
1-888 ASK-MODOT (1-888-275-6636)

IF A SEAL IS PRESENT ON THIS SHEET IT HAS BEEN ELECTRONICALLY SEALED AND DATED.

Attachment A

RED/WHITE IPM
WHITE IMP
* LIMIT OF IPM'S
** 12" CORE LINE
IPM INLAID PAVEMENT MARKER

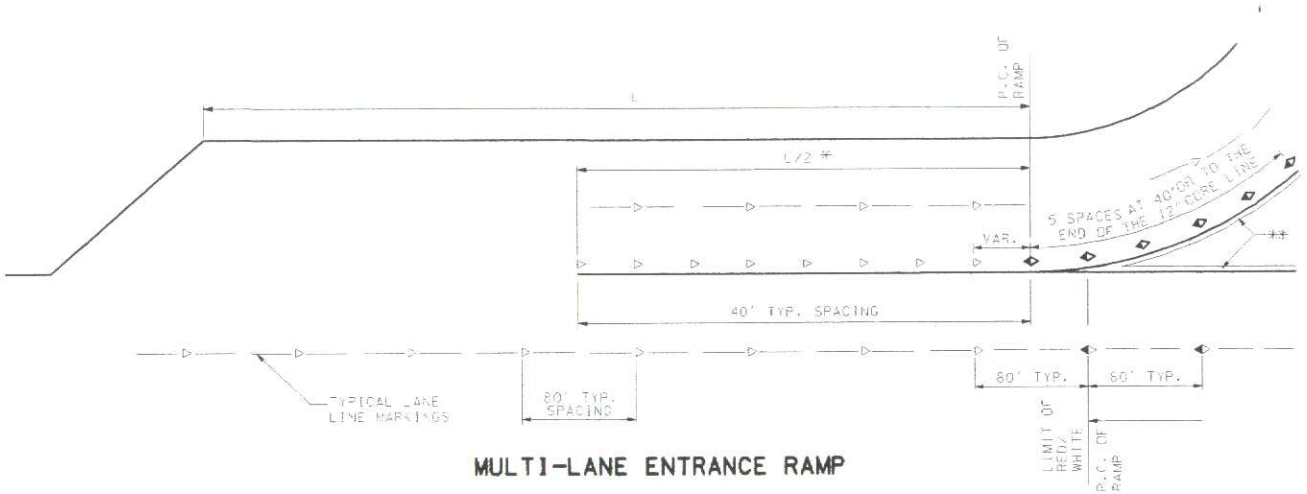

MULTI-LANE ENTRANCE RAMP

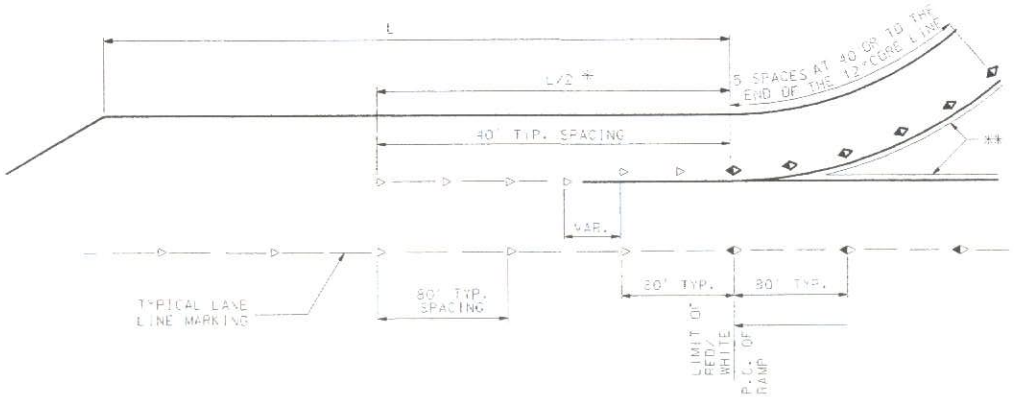

SINGLE LANE ENTRANCE RAMP

INLAID PAVEMENT MARKERS

EXIT AND ENTRANCE RAMPS

SPECIAL SHEET 2 OF 2

THIS MEDIA SHOULD NOT BE CONSIDERED A CERTIFIED DOCUMENT

DATE PREPARED 07/13/2009

ROUTE	STATE MO
DISTRICT	SHEET NO.

COUNTY
JOB NO.
CONTRACT NO.
PROJECT NO.
BRIDGE NO.

DATE	DESCRIPTION

IF A SEAL IS PRESENT ON THIS SHEET IT HAS BEEN ELECTRONICALLY SEALED AND DATED

MISSOURI HIGHWAYS AND TRANSPORTATION COMMISSION
MoDOT
105 WEST CAPITOL
JEFFERSON CITY, MO 65102
1-888-ASK-MODOT (1-888-275-6636)