PROPRIETARY DATA

PROPERTY OF ACE ROTO-MOLD MFG., INC. INFORMATION FURNISHED HEREIN IS THE PROPERTY OF ACE ROTO-MOLD MFG., INC.AND SHALL NOT BE USED, DISCLOSED TO OTHERS, OR COPIED WITHOUT THE EXPRESSED WRITTEN CONSENT OF ACE ROTO-MOLD MFG., INC. ALL RIGHTS RESERVED.

FS0535-48

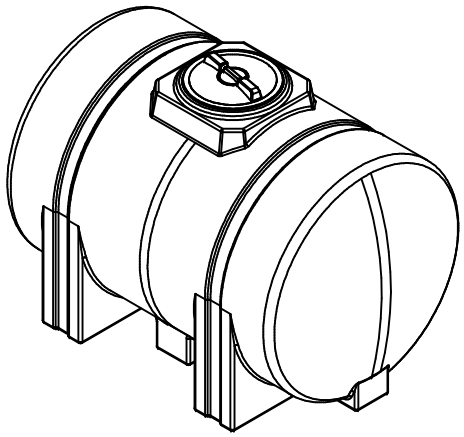

CUTAWAY VIEW OF BOTTOM INSIDE OF TANK

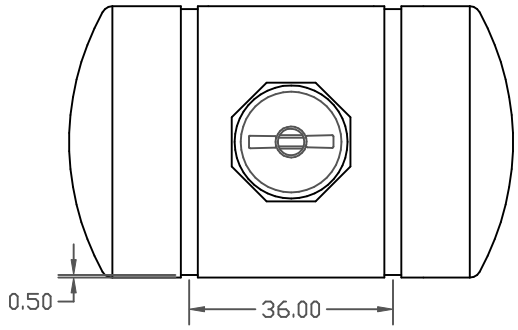

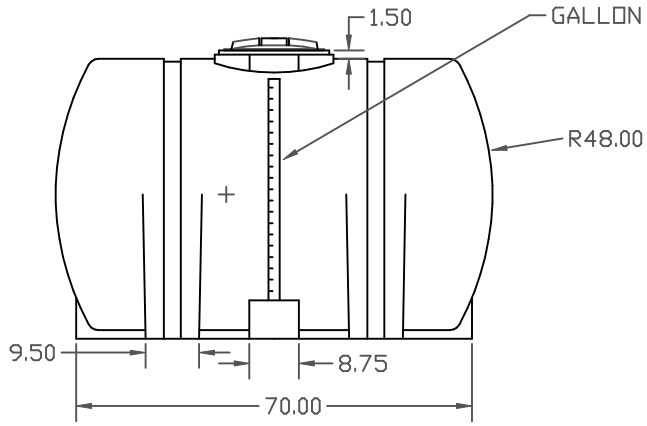

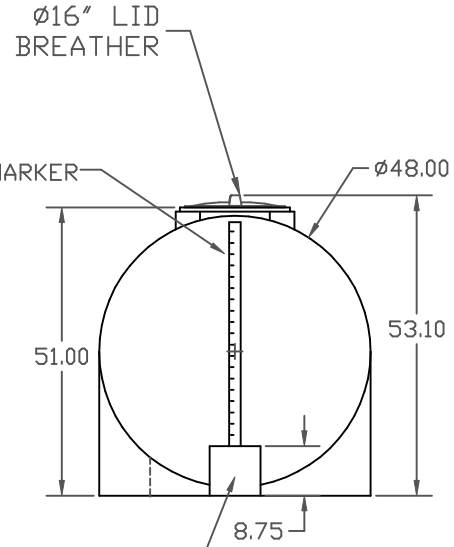

TROUGH PROMOTES DRAINAGE OF TANK

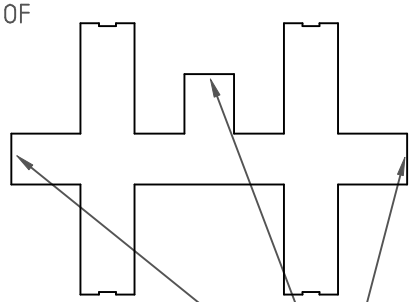

TANK FITTING CAN BE INSTALLED ON ANY OF THESE 3 SUMP LOCATIONS

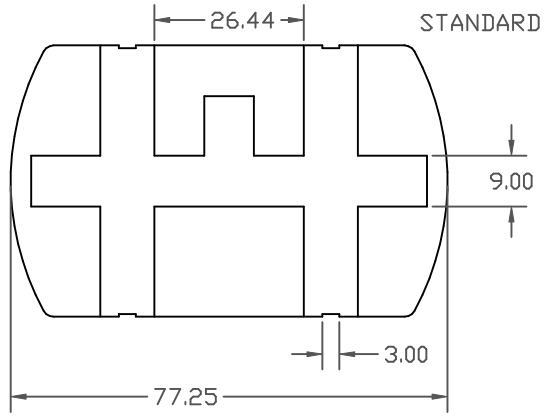

REV	DESCRIPTION	DATE	APPRD

DRAWN / DATE
NVE 7/25/05

APPRD. / DATE
DHJ 10/14/05

MATERIAL

HDPE OR EQUIVALENT
REFERENCE MATERIAL DATA SHEET FOR SPECIFIC PROPERTIES.

ACE ROTO-MOLD
A DIVISION OF DEN HARTOG INDUSTRIES, INC.
4018 HWY. 60 BLVD., BOX 421, HOSPERS, IOWA 51238

CLIENT / DESCRIPTION
535 GALLON FREE STANDING LEG TANK

ALL DIMENSIONS ARE IN DECIMAL INCHES
TOLERANCES UNLESS OTHERWISE SPECIFIED
± 1% @ 68° F

THIRD ANGLE PROJECTION
ANSI 14.5M

NOTES:
1. WHITE, YELLOW
2. SHOT WEIGHT 160 LBS.
3. NOM. WALL @ .285

SCALE N.S.

PART NO. FS0535-48