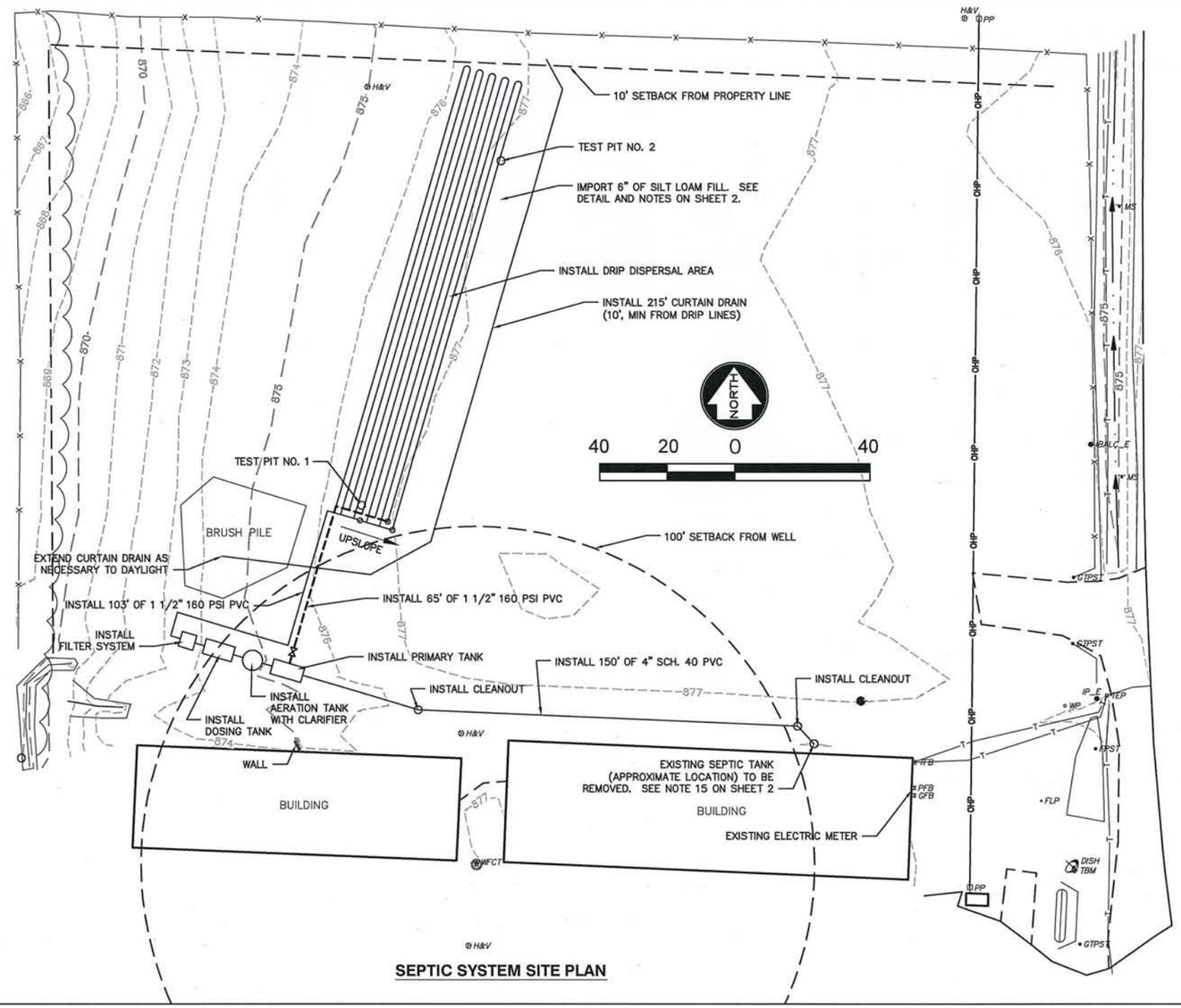

SEPTIC SYSTEM SITE PLAN

DESIGN NOTES:

SUPPLY MANUFACTURER'S SIZING CALCULATIONS TO ENGINEER FOR REVIEW.
MAINTENANCE BUILDING/OFFICE WITH 20 EMPLOYEES. USE 15 GPD PER EMPLOYEE – FLOW DATA FROM SIMILAR MODOT FACILITIES SHOWS AN AVERAGE OF ABOUT 10 GPD PER EMPLOYEE AND THIS IS NOT AN OFFICE BUILDING WITH EMPLOYEES ON SITE ALL DAY. TOTAL FLOW = (20 EMPLOYEES)(15 GPD PER EMPLOYEE) = 300 GPD DURING WORKWEEK.

ONE 1000–GALLON PRIMARY TANK: 1.5(300) + 500 = 950 → 1000 GALLONS
DETENTION TIME = 1000/300 = 3.33 DAYS OF STORAGE

AEROBIC TREATMENT SIZED FOR AT LEAST 300 GPD TREATMENT CAPACITY CAPABLE OF TREATING WASTEWATER DOWN TO POLLUTANT LOADINGS REQUIRED BY THE DRIP LINE MANUFACTURER.

SOIL LOADING RATING IS 0.1 GPD/SF. RESTRICTIVE LAYER (FRAGIPAN) AT 22–INCH DEPTH.

FOR DRIP DISPERSAL ALLOW DISPERSAL 7 DAYS A WEEK:
(300 GPD)(5 WORKDAYS)/7 DAYS = 215 GPD DISPERSAL FLOW
(215 GPD)/0.1 GPD/SF = 2,150 SF → 2,700 SF DISPERSAL AREA

LINE SPACING = 2 FEET
2,700 SF/2 FT = 1350 FEET OF DRIP LINE

LINE LENGTH SET TO 135 FEET
2,700 SF/135 FT = 20 FEET DISPERSAL AREA WIDTH

NUMBER OF ROWS = 20 FT WIDE/2 FT SPACING = 10 ROWS

NUMBER OF EMITTERS = (10 ROWS)(135 FT LONG)/2 FT BETWEEN EMITTERS = 675 EMITTERS

CONFIGURE DISPERSAL AREA AS ONE ZONE. USE PRESSURE COMPENSATING DRIP LINE WITH EMITTER FLOW RATE AT 0.6 GPH PER EMITTER
(675 EMITTERS)(0.6 GPH/EMITTER) = 405 GPH → 6.75 GPM DOSING FLOW THROUGH EMITTERS

FLUSHING FLOW NEEDED AT 2 FEET PER SECOND FLUSHING VELOCITY, MIMIMUM:
$(2\ FPS)\ \pi/4(0.57/12)^2 = 0.0035\ CFS = 1.59\ GPM$ PER LATERAL

(1.59 GPM/LATERAL)(5 LATERALS) = 7.95 GPM
6.75 GPM + 7.95 GPM = 14.7 GPM → 20 GPM
* FILTER BACKFLUSH FLOW IS 20 GPM

DOSING SHALL BE CONTROLLED BY AN AUTOMATIC DOSING TIMER WITH BACKUP FLOATS FOR LOW WATER LEVEL OFF AND HIGH WATER ALARM.
THE DOSING TIMER SHALL BE SET ON A 24 HOUR CLOCK.
DOSES SHALL BE AS FOLLOWS, BASED ON PUMP FLOW OF 20 GPM:
8 MINUTES PER DOSE (1.7 MINUTES SYSTEM FILL, 6.3 MINUTES DOSE TO SOIL)
4 DOSES PER DAY SPACED EVENLY THROUGHOUT DAY (6–HOUR CYCLES)
67.5 GALLONS PER DOSE → 216 GPD = (8 MINUTES)(6.75 GPM)(4 DOSES)
216 GPD/2,700 SF = 0.08 GPD/SF

FLUSHING DOSES SHALL BE AS RECOMMENDED BY DRIP LINE MANUFACTURER BUT NO LESS THAN ONCE PER DAY. FILTER BACKFLUSH SHALL BE CONTROLLED AUTOMATICALLY BY PRESSURE DIFFERENTIAL AND TIMED SETTING BY OPERATOR.
CONTROLS SHALL ALLOW DOSING CYCLES TO BE CHANGED BY SYSTEM OPERATOR.

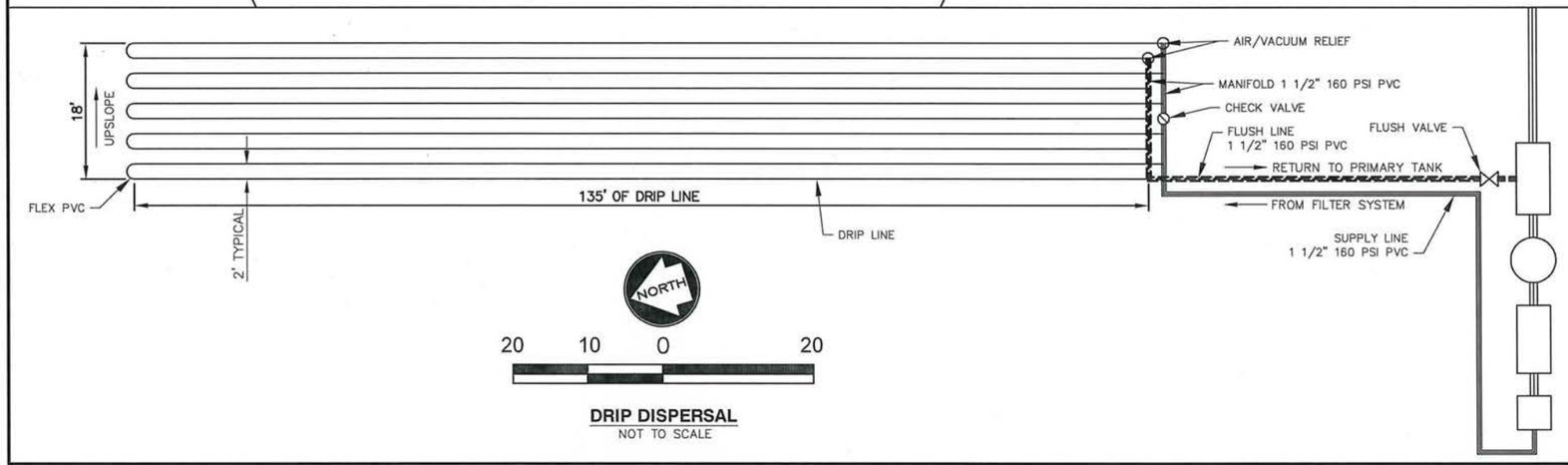

DRIP DISPERSAL
NOT TO SCALE

STATE OF MISSOURI
PHILIP RYAN WILSON
NUMBER PE-2008019618
PROFESSIONAL ENGINEER
2/24/16

NO.	DATE	REVISIONS	BY	APPD
1				
2				
3				
4				
5				

COPYRIGHT © - 2014 -SHAFER, KLINE & WARREN INC.
MISSOURI CERTIFICATE OF AUTHORITY: 00143

Designed By: PRW
Drawn By: JDC
Checked By: PRW
Issue Date:

SHAFER, KLINE & WARREN, INC.
107 Butler Street, Macon, MO 63552–1628
660/385–6441 FAX: 660/385–6614
OFFICE LOCATIONS: Columbia, MO Houston, TX Lenexa, KS
Macon, MO North Kansas City, MO Tulsa, OK
CIVIL ENGINEERS ELECTRICAL ENGINEERS MECHANICAL ENGINEERS STRUCTURAL ENGINEERS LANDSCAPE ARCHITECTS LAND SURVEYORS LAND PLANNERS

MODOT MAINTENANCE FACILITY
DRAKE, MISSOURI

SEPTIC SYSTEM IMPROVEMENTS
ONSITE PLAN AND DETAILS

150399–010
SHEET NO.
1 OF 2

L:\150399-010_CAD\CIVIL\150399-010 SITE.DWG
LAYOUT: 1 BY: JCARTER DATE: 2/24/2016
XREF DWG1: 150399-010 BASE XREF DWG2: 150399-010 SITE DESIGN
XREF DWG3: NONE XREF DWG4: NONE

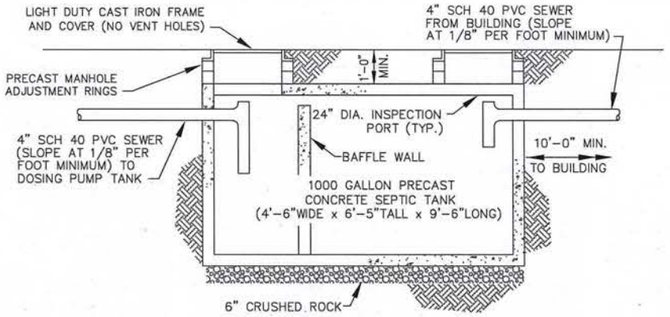

PRIMARY TANK DETAIL
NOT TO SCALE

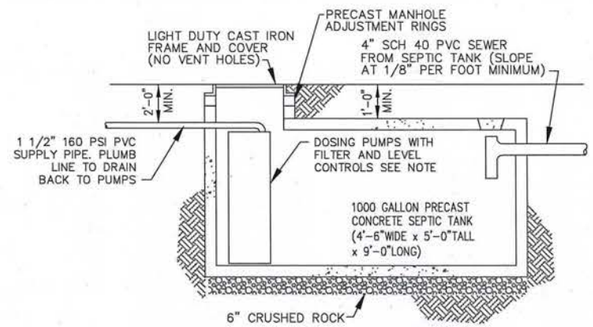

DOSING TANK DETAIL
NOT TO SCALE

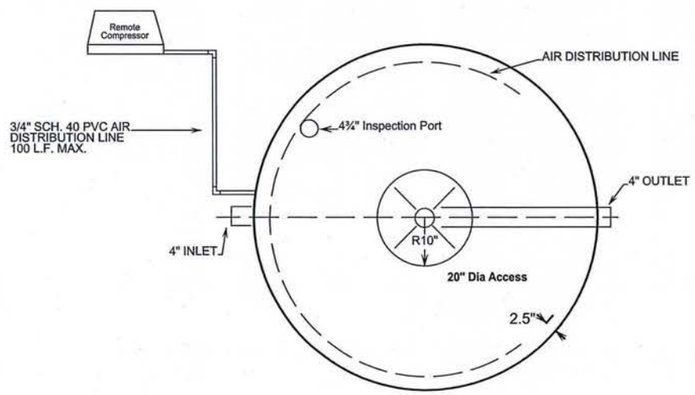

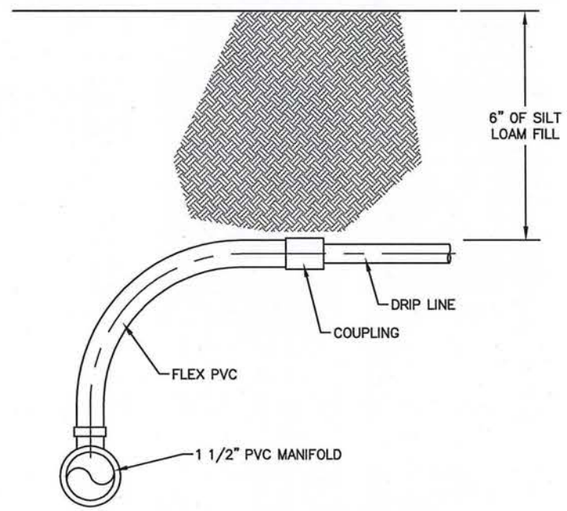

CONNECTION WITH FLEX PIPE DETAIL
NOT TO SCALE

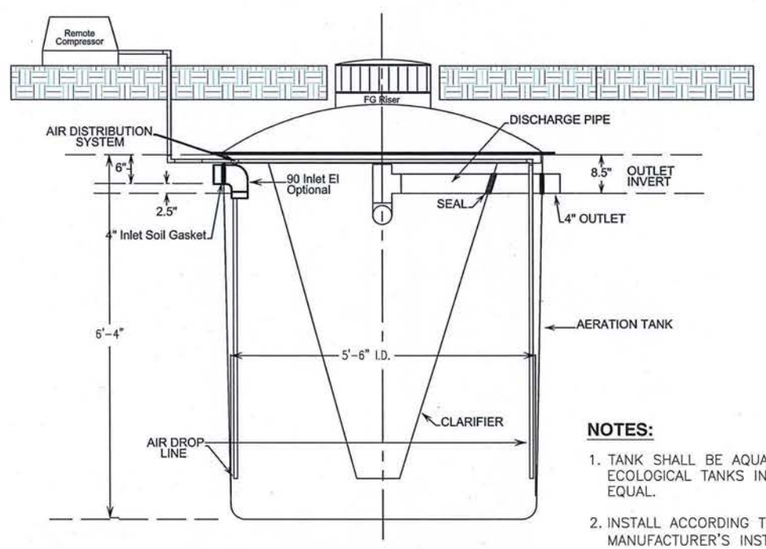

AERATION TANK WITH CLARIFIER
NOT TO SCALE

NOTES:

1. TANK SHALL BE AQUA SAFE BY ECOLOGICAL TANKS INC., OR EQUAL.
2. INSTALL ACCORDING TO MANUFACTURER'S INSTRUCTIONS.

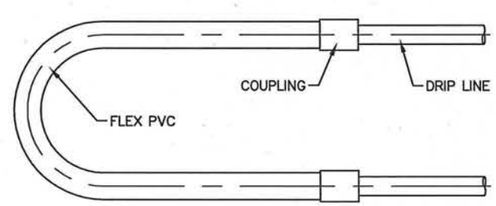

LOOP AND FLEXIBLE CONNECTIONS
NOT TO SCALE

NOTES:

1. SILT LOAM FILL SHALL BE A LOW PLASTICITY SOIL (</= 10 PERCENT CLAY) WITH 100 PERCENT PASSING THE NO. 8 SIEVE AND 70 PERCENT PASSING THE NO. 200 SEIVE.
2. LOOSEN THE SOIL SURFACE WITH A CULTIVATOR OR GARDEN PLOW WHEN THE SOIL IS DRY BEFORE THE DRIP LINES ARE INSTALLED. TILL THE FILL INTO THE NATURAL SOIL TO CREATE A GRADUAL BOUNDARY BETWEEN THE TWO. PLACE IN LAYERS AND FILL UNTIL THE 6-INCH DEPTH IS ACHIEVED. SHAPE THE SITE TO SHED WATER AND REMOVE ALL LOW SPOTS.
3. DRIP LINE SHALL BE PRESSURE COMPENSATING WITH EMITTERS FLOW RATE OF 0.6 GPH PER EMITTER. EMITTERS SHALL BE SPACED 24 INCHES APART.
4. DRIP LINE SHALL BE NETAFIM BIOLINE DRIPLINE OR APPROVED EQUAL. DRIP LINE SHALL BE INSTALLED ACCORDING TO MANUFACTURER'S INSTRUCTIONS.
5. DRIP DISPERSAL LATERALS SHALL BE INSTALLED ON THE CONTOURS OF THE DISPERSAL AREA.
6. SUPPLY AND RETURN MANIFOLDS SHALL BE INSTALLED LOWER THAN THE DRIP LINES TO PROVIDE POSITIVE DRAINBACK.
7. SUPPLY AND FLUSH PIPE AND MANIFOLDS SHALL BE CONSTRUCTED OF 1 1/2" CLASS 160 PVC PIPE, SLOPED TO PROVIDE POSITIVE SYSTEM DRAIN BACK TO THE PRIMARY TANK.
8. SEED AND MULCH TO ESTABLISH A TURF GRASS COVER AS SOON AS THE DRIP SYSTEM IS INSTALLED.
9. WATER PUMPED TO THE DISPERSAL AREA SHALL PASS THROUGH A DISC FILTRATION SYSTEM PROVIDED BY THE DRIP LINE MANUFACTURER. THE DISC FILTER SHALL HAVE A BUILT IN BACK FLUSH CONTROLLER. MINIMUM BACK FLUSH FLOW SHALL BE 20 GPM.
10. DOSING PUMP SHALL BE AN ENGINEERED DEMAND DOSED PUMP PACKAGE AND SHALL INCLUDE PUMP, FILTER, FLOATS, SWITCH ASSEMBLY, DISCHARGE ASSEMBLY AND PUMP CONTROL PANEL.
11. PUMP SHALL BE CAPABLE OF PUMPING 20 GPM AT 97 FT TDH.
12. PLACE SHUTOFF VALVE IN PUMP TANK, ACCESSIBLE FROM GROUND SURFACE. DO NOT INSTALL CHECK VALVE TO ALLOW POSITIVE DRAINBACK FROM DISPERSAL SYSTEM.
13. PUMP CONTROL PANEL SHALL BE CAPABLE OF AUTOMATIC TIMED DOSING AS DESCRIBED UNDER DESIGN NOTES. CONTROL PANEL SHALL ALLOW FOR A HIGH WATER LEVEL OVERRIDE.
14. PRIMARY TANK SHALL BE 1000 GALLON, TWO CHAMBER TANK WITH INLET TEE EXTENDING 20% OF THE TOTAL LIQUID DEPTH BELOW THE LIQUID SURFACE AND OUTLET TEE EXTENDING 40% OF THE TOTAL LIQUID DEPTH BELOW THE LIQUID SURFACE. DOSING TANK SHALL BE 1000 GALLON, SINGLE CHAMBER TANK. TANKS MAY BE CONSTRUCTED OF PRECAST CONCRETE OR POLYCARBONATE WITH CONCRETE BASE AS REQUIRED BY MANUFACTURER. TANKS SHALL BE FILLED WITH WATER PRIOR TO BACKFILL..
15. EXISTING SEPTIC TANK SHALL BE BYPASSED AND ABANDONED. TO ABANDON: PUMP SEPTAGE OUT. PUNCTURE HOLES IN BOTTOM AND FILL WITH SAND. REMOVED SEPTAGE SHALL BE DISPOSED OF AT A PERMITTED WASTEWATER FACILITY.
16. ELECTRIC POWER SUPPLY ENTERS AT THE EAST END OF THE MAINTENANCE FACILITY BUILDING. CONTRACTOR IS RESPONSIBLE FOR ALL ELECTRIC SUPPLY MODIFICATIONS, CONTROLS AND FIELD WIRING.

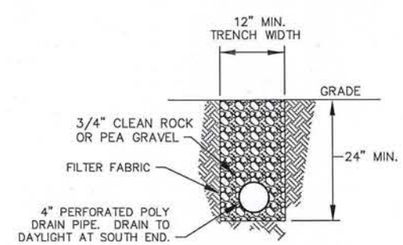

CURTAIN DRAIN DETAIL
NOT TO SCALE

STATE OF MISSOURI
PHILIP RYAN WILSON
NUMBER PE-2008019618
PROFESSIONAL ENGINEER
2/2/16

NO.	DATE	REVISIONS	BY	APP'D
1				
2				
3				
4				
5				

COPYRIGHT © - 2014 - SHAFER, KLINE & WARREN INC.
MISSOURI CERTIFICATE OF AUTHORITY: 000143

Designed By: PRW
Drawn By: JDC
Checked By: PRW
Issue Date: ____

SHAFER, KLINE & WARREN, INC.
107 Butler Street, Macon, MO 63552-1628
660/385-6441 FAX: 660/385-6614
OFFICE LOCATIONS:
Columbia, MO
Houston, TX
Lenexa, KS
Macon, MO
North Kansas City, MO
Tulsa, OK
CIVIL ENGINEERS ELECTRICAL ENGINEERS MECHANICAL ENGINEERS STRUCTURAL ENGINEERS LANDSCAPE ARCHITECTS LAND SURVEYORS LAND PLANNERS

MODOT MAINTENANCE FACILITY
DRAKE, MISSOURI

SEPTIC SYSTEM IMPROVEMENTS
NOTES AND DETAILS

150399-010

SHEET NO. 2 OF 2

L:\150399-010_CAD\CIVIL\150399-010 SITE.DWG
LAYOUT: 2 | BY: JCARTER | DATE: 2/2/2016
XREF DWG1: | XREF DWG2:
XREF DWG3: NONE | XREF DWG4: NONE