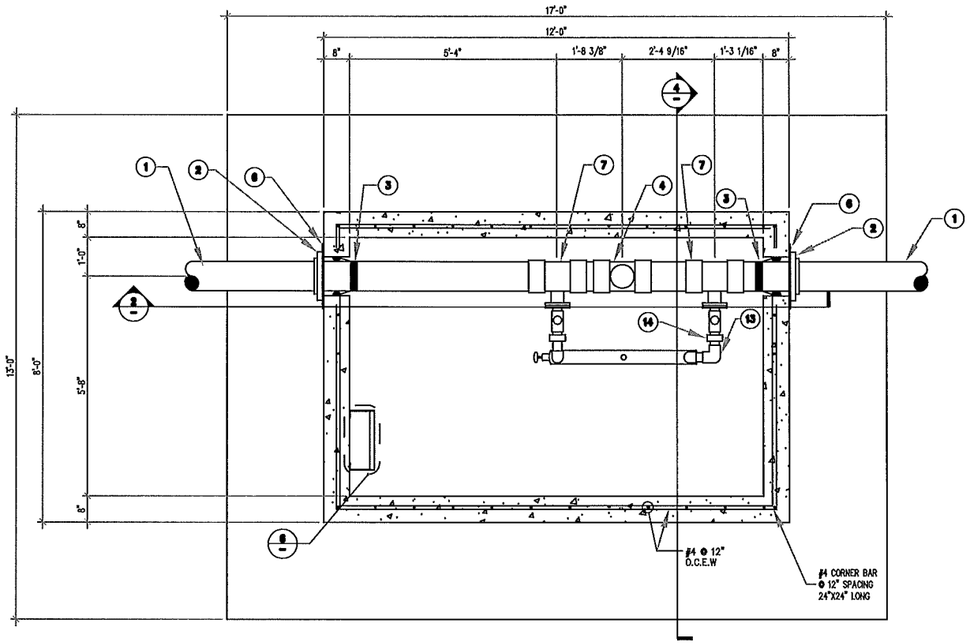

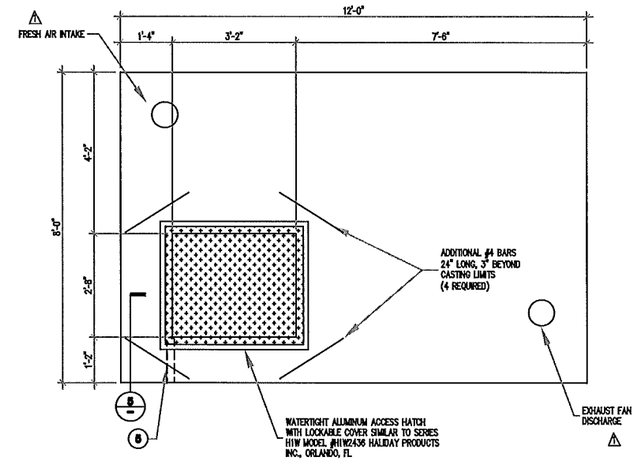

ACCESS LADDER NOTES:

1. LADDER SHALL BE ALL ALUMINUM WELDED CONSTRUCTION.
2. LADDER SHALL HAVE SLIP RESISTANT RIBBED RUNG DESIGN.
3. LADDER SHALL BE HALIDAY PRODUCTS SERIES L1B LADDER.

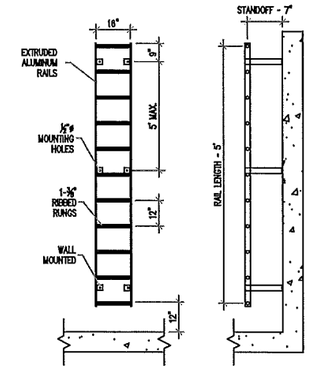

6 ACCESS LADDER DETAIL
NTS

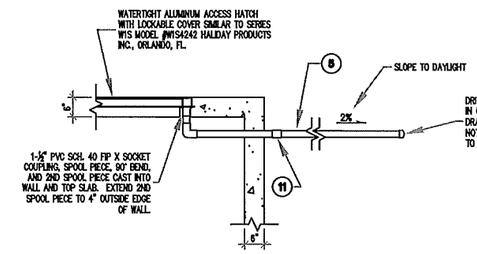

5 HATCH DRAIN PIPE
NTS

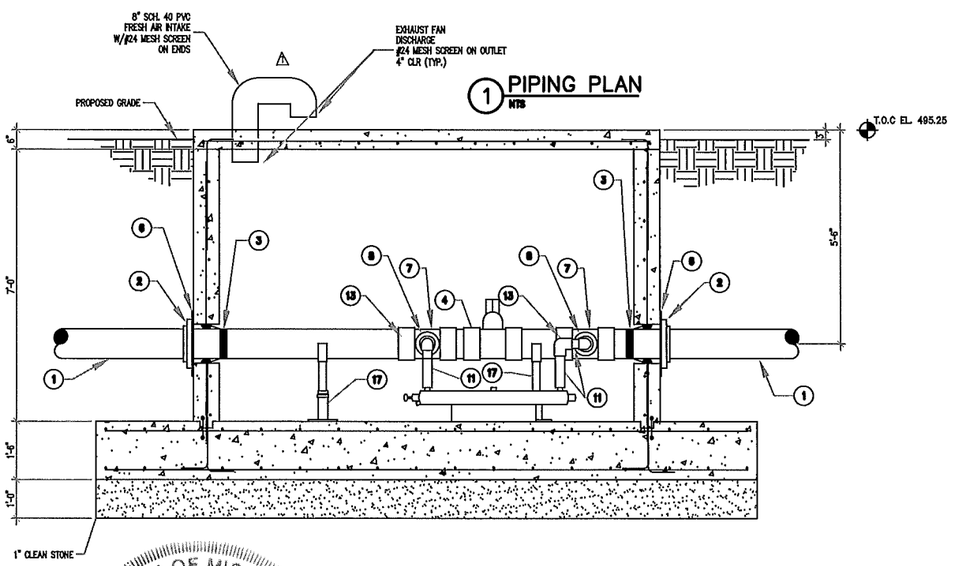

1 PIPING PLAN
NTS

2 PIPING SECTION
NTS

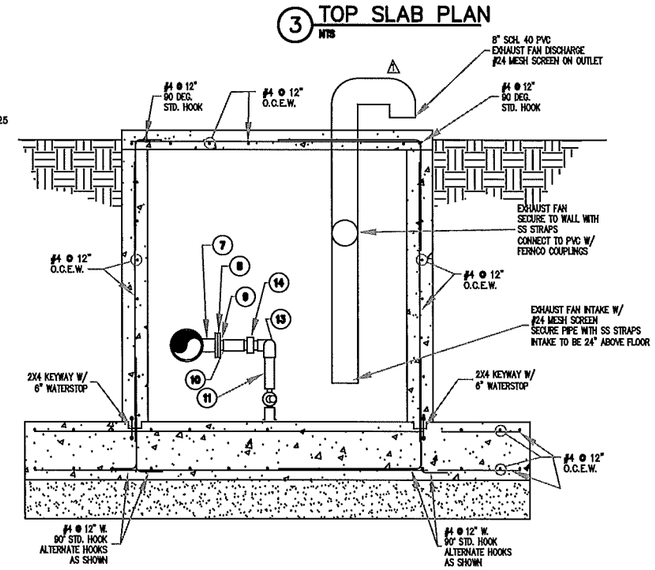

3 TOP SLAB PLAN
NTS

4 PIPING SECTION AND REINFORCING PLAN
NTS

GENERAL NOTES

1. LAPPING OF WATERSTOPS SHALL NOT BE PERMITTED. WATERSTOPS BE BUTT WELDED.
2. CONCRETE PLACEMENTS ARE TO END AT CONSTRUCTION JOINTS.
3. WATERSTOPS ARE REQUIRED AT ALL CONSTRUCTION JOINT LOCATIONS.
4. FILL ALL CONSTRUCTION JOINTS WITH POLYURETHANE CAULK.
5. ALTERNATE POUR SEQUENCE SHALL BE APPROVED BY THE ENGINEER PRIOR TO CONSTRUCTION.

PIPING SCHEDULE

NUMBER	DESCRIPTION
1	8" PVC – FLG. X P.E.
2	8" RETAINER GLAND (MEGA –LUG)
3	Z–LOK FLEXIBLE MANHOLE CONNECTOR
4	8" BALL VALVE WITH SOCKET ENDS FROM SPEARS MFG.
5	1–1/2" SCH. 40 PVC DRAIN PIPE
6	20" DIA. X 3/8" PLATE STEEL WASHER
7	8"X2" REDUCING TEE – FLG. X FLG.
8	3" FLANGE W/2" THRD. TAP
9	2"X1–1/4" SCH. 80 PVC TT BUSHING
10	1–1/4" SCH. 80 PVC MALE X SOCKET ADAPTER
11	1–1/4" SCH. 80 PVC PIPE
12	1–1/4" SCH. 80 PVC 90 DEG. BEND
13	1–1/4" SCH. 80 PVC UNION
14	ADJUSTABLE PIPE SUPPORT

STATE OF MISSOURI
MICHAEL MELVIN HALL
NUMBER E-30044
REGISTERED PROFESSIONAL ENGINEER
7-15-11

NO.	DATE	REVISIONS	BY	APP'D
1	7-15-11	ADD EXHAUST FAN	MMH	MMH
2				
3				
4				
5				

Designed By:
Drawn By:
Checked By:
Issue Date:

COPYRIGHT ©-2011 -SHAFER, KLINE & WARREN INC.
MISSOURI CERTIFICATE OF AUTHORITY: F001139850

SHAFER, KLINE & WARREN, INC.
1400 Forum Boulevard, Suite 19A, Columbia, MO 65203-1997
573/442-4537 FAX: 573/442-4543
OFFICE LOCATIONS: Chillicothe, MO Columbia, MO Houston, TX Iola, KS Kansas City, MO Lenexa, KS Macon, MO North Kansas City, MO Tulsa, OK
CIVIL ENGINEERS ELECTRICAL ENGINEERS MECHANICAL ENGINEERS STRUCTURAL ENGINEERS LANDSCAPE ARCHITECTS LAND SURVEYORS LAND PLANNERS

BLOOMSDALE MoDOT REST STOP
BLOOMSDALE, MISSOURI

LAGOON IMPROVEMENTS
VAULT DETAILS

108781-010

SHEET NO. 8 OF 10

L:\108781-010_CAD\CIVIL\108781-010-DETAILS.DWG
LAYOUT: SHT 8 | BY: MHALL | DATE: 7/15/2011
XREF DWG1: NONE | XREF DWG2: NONE
XREF DWG3: NONE | XREF DWG4: NONE

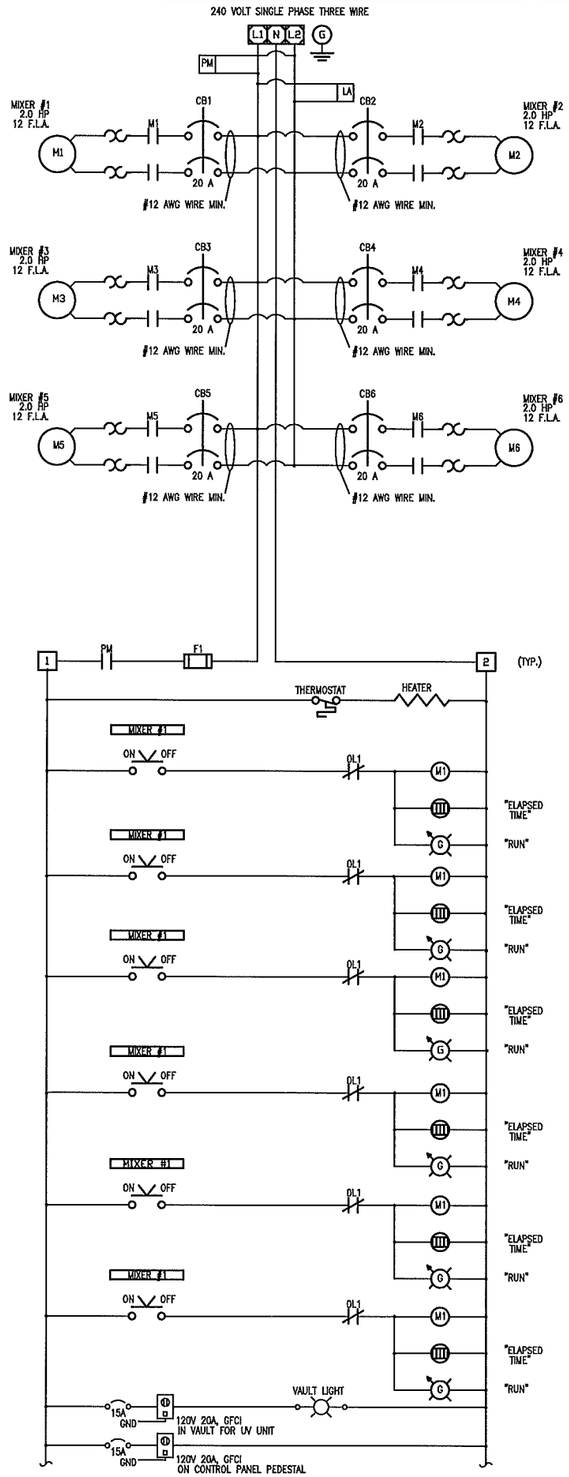

1 CONTROL SCHEMATIC
NOT TO SCALE

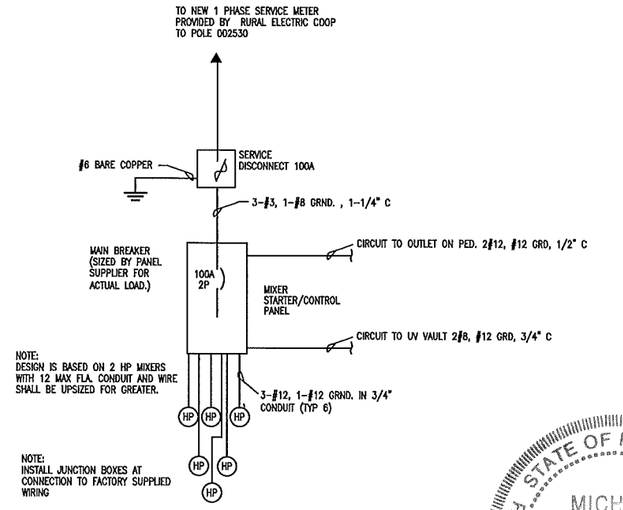

2 ONE-LINE DIAGRAM
NOT TO SCALE

STATE OF MISSOURI
MICHAEL MELVIN HALL
NUMBER E-30044
REGISTERED PROFESSIONAL ENGINEER
7-15-11

ELECTRIC SERVICE NOTES

1. NEW ELECTRIC SERVICE IS 200 AMP, 240 VOLT, 1 PHASE 3 WIRE.
2. CONTRACTOR SHALL ROUTE THE WIRING TO THE NEW METER BASE SUPPLIED BY THE REC.
3. SHOULD DISCONNECT BE PLACED ON POLE WITH METER, CABLE AND CONDUIT SIZE SHALL BE RE-EVALUATED FOR VOLTAGE DROP.

MECHANICAL EQUIPMENT SCHEDULE

MARK: EF-1
FUNCTION: EXHAUST FAN
ELECT.: 120 VOLT, ¼HP
REMARKS: SOLER & PALAU 8" IN-LINE FAN
MODEL NUMBER TD-200
GRAINGER MODEL: 3C047

GENERAL ELECTRIC NOTES

1. ALL INSTALLATION SHALL CONFORM TO THE LATEST EDITION OF THE NATIONAL ELECTRIC CODE (NEC) AND ANY OTHER APPLICABLE STATE AND LOCAL CODES.
2. ALL ELECTRICAL DEVICES & ENCLOSURES LOCATED OUTSIDE SHALL BE WEATHERPROOF & RATED FOR EXTERIOR USE, NEMA 3R.
3. ALL ELECTRICAL CONDUCTORS SHALL BE COPPER.
4. ELECTRICAL CONTRACTOR/SUPPLIER SHALL BE RESPONSIBLE FOR FINAL COORDINATION OF OVERLOAD PROTECTION WITH ACTUAL FULL LOAD AMPERAGE AND WIRE SIZING.
5. ALL BURIED CONDUIT SHALL BE PVC SCHEDULE 80.
6. ALL INTERIOR CONDUIT SHALL BE RIGID ALUMINUM.

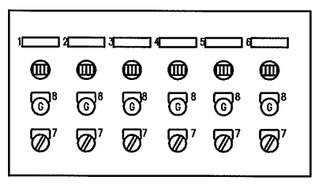

INNER DOOR
NEMA 4X FIBERGLASS ENCLOSURE, MACHINE GRAY
WITH ALUMINUM SUBPAN AND INNER DOOR

NAMEPLATE LEGEND

1. MIXER #1
2. MIXER #2
3. MIXER #3
4. MIXER #4
5. MIXER #5
6. MIXER #6
7. ON-OFF SWITCH
8. RUN
9. AERATOR CONTROL PANEL (A)

3 INTERIOR CONTROL PANEL LAYOUT
NOT TO SCALE

4 ELECTRICAL RACK PLAN
1/4" = 1'

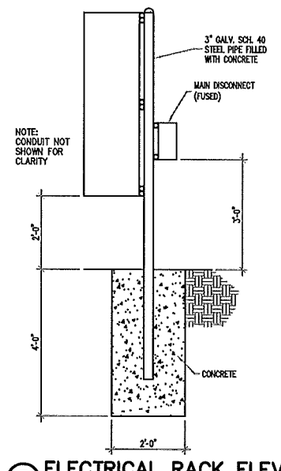

5 ELECTRICAL RACK ELEV.
1/4" = 1'

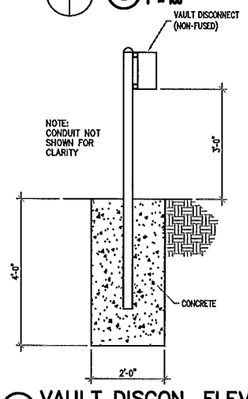

6 VAULT DISCON. ELEV.
1/4" = 1'

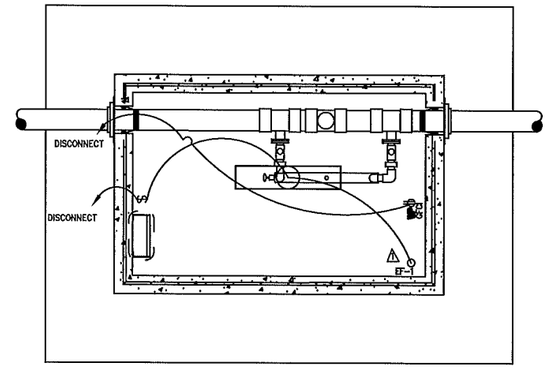

7 LIGHTING/120V/CONTROL POWER PLAN
3/16" = 1'

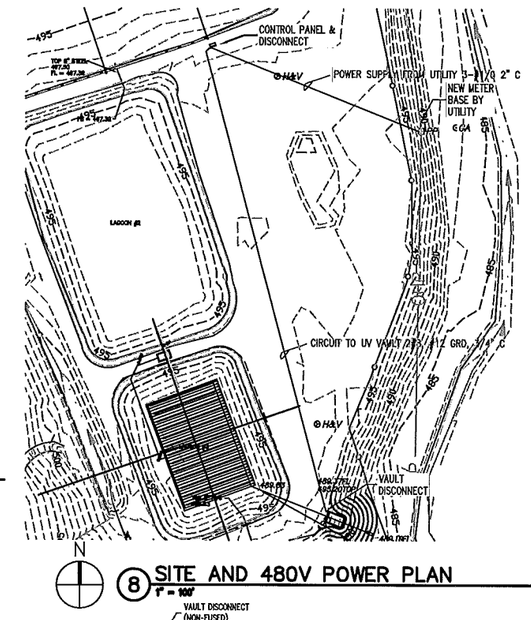

8 SITE AND 480V POWER PLAN
1" = 100'

NO.	DATE	REVISIONS	BY	APP'D
1	7-15-11	ADD EXHAUST FAN	MMH	MMH
2				
3				
4				
5				

Designed By:
Drawn By:
Checked By:
Issue Date:

COPYRIGHT ©-2011 -SHAFER, KLINE & WARREN INC.
MISSOURI CERTIFICATE OF AUTHORITY: F001139850

SHAFER, KLINE & WARREN, INC.
1400 Forum Boulevard, Suite 19A, Columbia, MO 65203-1997
573/442-4537 FAX: 573/442-4543
OFFICE LOCATIONS: Chillicothe, MO Columbia, MO Houston, TX Iola, KS Kansas City, MO Lenexa, KS Macon, MO North Kansas City, MO Tulsa, OK
CIVIL ENGINEERS ELECTRICAL ENGINEERS MECHANICAL ENGINEERS STRUCTURAL ENGINEERS LANDSCAPE ARCHITECTS LAND SURVEYORS LAND PLANNERS

BLOOMSDALE MoDOT REST STOP
BLOOMSDALE, MISSOURI

LAGOON IMPROVEMENTS
VAULT ELECTRICAL DETAILS

108781-010

SHEET NO. 9 OF 10

L:\108781-010_CAD\CIVIL\108781-010-DETAILS.DWG
LAYOUT: SHT 9 | BY: MHALL | DATE: 7/15/2011
XREF DWG1: NONE | XREF DWG2: NONE
XREF DWG3: NONE | XREF DWG4: NONE