BEFORE YOU
DIG – DRILL – BLAST
Call 1-800-344-7483
(TOLL FREE)
MISSOURI ONE CALL SYSTEM, INC.

GREEN CITY MoDOT MAINTENANCE FACILITY SEWER EXTENSION

GREEN CITY, SULLIVAN COUNTY, MISSOURI

KEY MAP
SHOWING LOCATION OF COUNTY

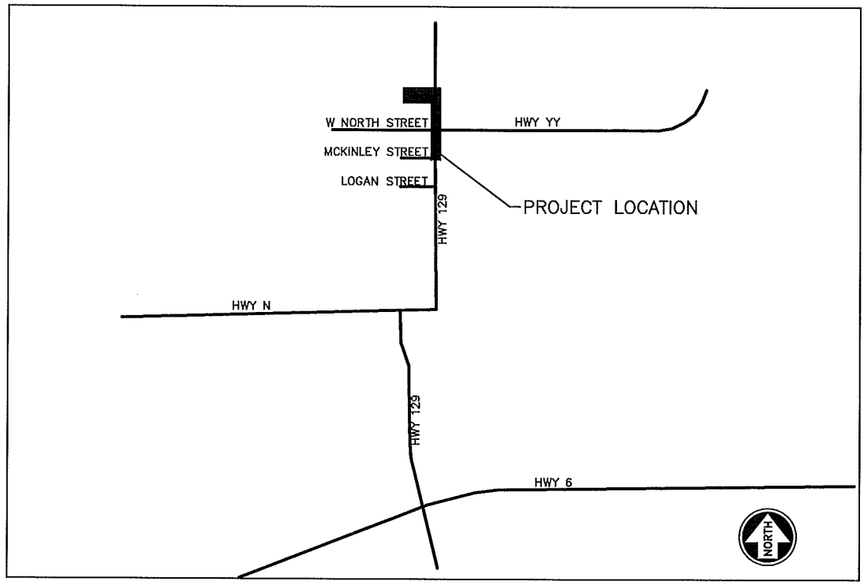

SE 1/4, SECTION 7, TOWNSHIP 63N, RANGE 18W
PROJECT LOCATION MAP
NOT TO SCALE

INDEX OF SHEETS

1 COVER SHEET
2 PLAN & PROFILE
3 PLAN & PROFILE
4 PLAN & PROFILE
5 SANITARY SEWER SERVICE LINE PLAN
6 EROSION CONTROL PLAN & DETAILS
7 DETAILS

NOTES TO CONTRACTOR:

1) UNDERGROUND UTILITIES HAVE BEEN SHOWN FROM APPROXIMATE LOCATIONS PROVIDED BY UTILITY COMPANIES, THEREFORE THEIR LOCATIONS MUST BE CONSIDERED APPROXIMATE ONLY. VERIFICATION OF THE LOCATIONS OF UNDERGROUND UTILITIES, SHOWN OR NOT SHOWN, WILL BE THE RESPONSIBILITY OF THE CONSTRUCTION CONTRACTOR.

2) CONTRACTOR SHALL MAKE EVERY EFFORT TO ASSURE MINIMUM CLEARANCE BETWEEN SEWER LINES AND WATER LINES (10' HORIZONTAL, 18" VERTICAL AT CROSSINGS).

3) ALL ROADS, DRIVEWAYS, CULVERTS, SIDEWALKS, FENCES, AND LANDSCAPING DAMAGED DURING CONSTRUCTION SHALL BE REPAIRED OR REPLACED.

4) ALL EXCAVATION WITH THE STREET RIGHT-OF-WAY SHALL BE BACKFILLED WITH GRANULAR MATERIAL OR COMPACTED EARTH FILL.

5) ALL EROSION CONTROL DEVICES SHALL BE INSTALLED AS SHOWN ON THE PLANS.

6) IT IS THE INTENT OF THESE PLANS TO COMPLY WITH THE REQUIREMENTS OF THE MISSOURI CLEAN WATER COMMISSION.

7) SILT FENCE SHALL BE PLACED AS INDICATED ON THE PLANS

ESTIMATED QUANTITIES

ITEM #	DESCRIPTION	UNITS	QUANTITY
1	8" PVC SDR 35 PIPE	LF	1105
2	48" DIAMETER MANHOLE	EA	4
3	CONNECTION TO EXISTING MANHOLE	LS	1
4	6" PVC SDR 35 PIPE	LF	369
5	CONN TO BUILDING SANITARY SEWER SERVICE	EA	1
6	INSTALLATION OF OIL/WATER SEPARATOR	EA	1
7	SEPTIC TANK ABANDON	LS	1
8	GRAVEL SURFACE REPLACEMENT	SY	277
9	ASPHALT REMOVAL AND REPLACEMENT	SY	26
10	SEEDING AND SODDING	LS	1
11	CONSTRUCTION STAKING	LS	1
12	SILT FENCE	LS	1
13	STRAW BALE DIKE	EA	1
14	STRAW BALE DITCH CHECK	EA	9
15	MOBILIZATION	LS	1
16	FULL DEPTH GRANULAR BEDDING	LF	100
17	CLEANOUTS	EA	3
18	6"x6"x6" WYES	EA	2
19	8"x8"x6" WYES	EA	2
20	6" – 45° BENDS	EA	2
21	6" – 22.5° BENDS	EA	1
22			

UTILITIES

SEWER – CITY OF GREEN CITY
4 GREEN STREET
P.O. BOX 235
GREEN CITY, MO 63545
(660) 874-4219

ELECTRIC – AMEREN UE
204 WEST COTTONWOOD
KIRKSVILLE, MO 63501
(800) 552-7583

WATER – CITY OF GREEN CITY
4 GREEN STREET
P.O. BOX 235
GREEN CITY, MO 63545
(660) 874-4219

GAS – CITY OF GREEN CITY
4 GREEN STREET
P.O. BOX 235
GREEN CITY, MO 63545
(660) 874-4219

PHONE – NE MISSOURI RURAL TELEPHONE
P.O. BOX 98
GREEN CITY, MO 63545
(800) 224-6179

CATV – SUPERIOR CABLE
P.O. BOX 174
CENTERVILLE, IA 63565
(660) 947-3592

BENCHMARK

TEMPORARY BENCHMARK
STEPPED NAILS IN POWER POLE AT INTERSECTION OF HWY 129 AND MCKINLEY STREET
ELEVATION = 1042.36

TEMPORARY BENCHMARK
ALUMINUM CAP ON SE CORNER OF SATELLITE DISH CONCRETE PAD EAST OF MoDot MAINTENANCE BUILDING
ELEVATION = 1052.07

NO.	DATE	REVISIONS	BY	APP'D
1				
2				
3				
4				
5				

COPYRIGHT © 2009-SHAFER, KLINE & WARREN INC.
MISSOURI CERTIFICATE OF AUTHORITY: F001139850

Designed By: BDP
Drawn By: BDP
Checked By: MWH
Issue Date:

MICHAEL MELVIN HALL
E-30044

SHAFER, KLINE & WARREN, INC.
1400 Forum Boulevard, Suite 19A, Columbia, MO 65203-1997
573/442-4637 FAX: 573/442-4543
OFFICE LOCATIONS: Chillicothe, MO Columbia, MO Houston, TX Iola, KS Kansas City, MO Lenexa, KS Macon, MO North Kansas City, MO Tulsa, OK
CIVIL ENGINEERS ELECTRICAL ENGINEERS MECHANICAL ENGINEERS STRUCTURAL ENGINEERS LANDSCAPE ARCHITECTS LAND SURVEYORS LAND PLANNERS

GREEN CITY MODOT MAINT FACILITY
GREEN CITY, MISSOURI

SEWER EXTENSION
COVER

800160-050

SHEET NO.
1 OF 7

S:\PROJ\800160-050\DWG\800169D-050 COVER.DWG
LAYOUT: SHT 1 BY: PERRIGO DATE: 1/21/2010
XREF DWG1: NONE XREF DWG2: NONE
XREF DWG3: NONE XREF DWG4: NONE

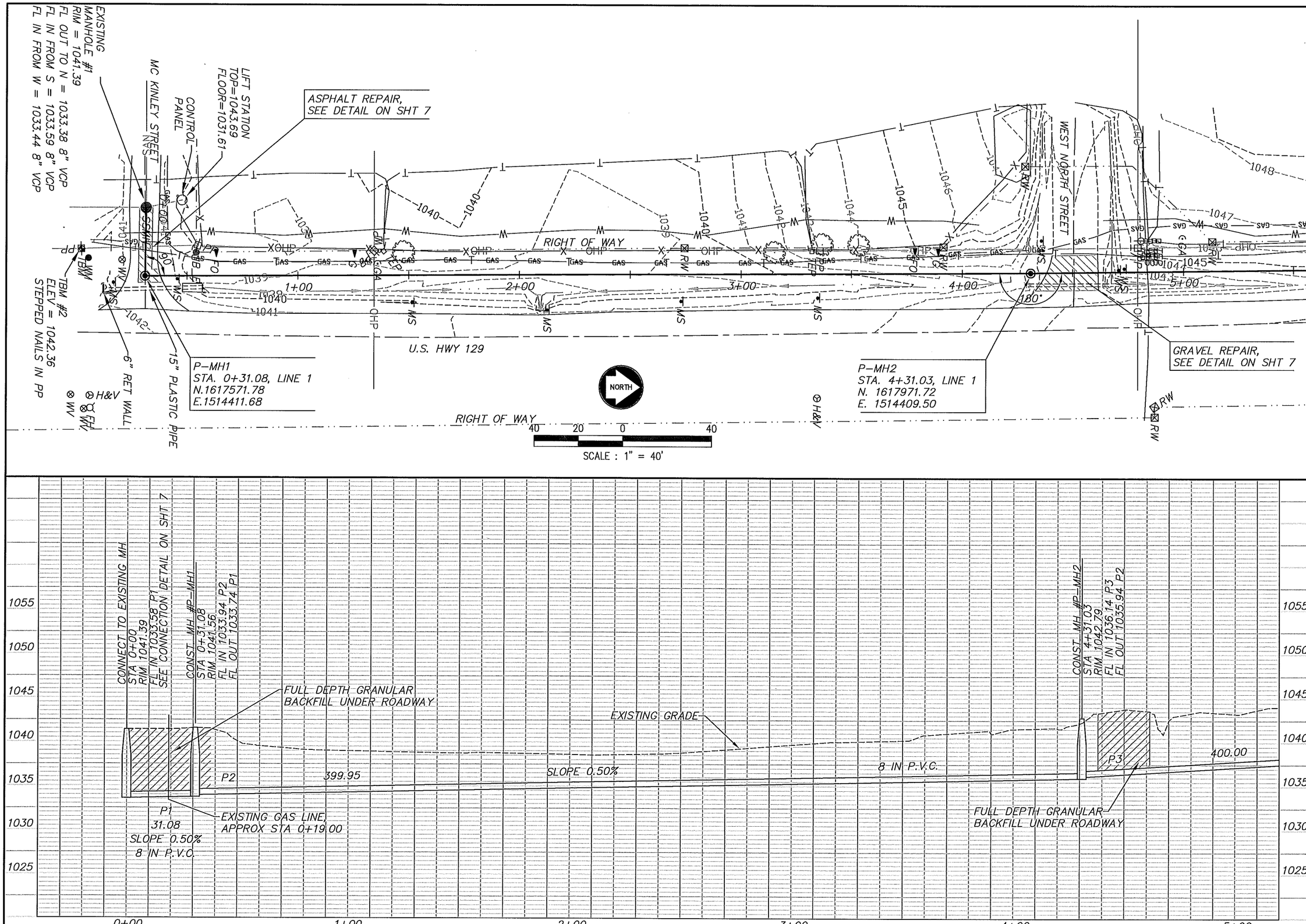

S:\PROJ\800160-050\DWG\800160-050 PLAN & PROFILE.DWG
LAYOUT: PP1 | BY: PERRIGO | DATE: 1/21/2010
XREF DWG1: NONE | XREF DWG2: NONE
XREF DWG3: NONE | XREF DWG4: NONE

NO.	DATE	REVISIONS	BY	APP'D
1				
2				
3				
4				
5				

COPYRIGHT ©-2009-SHAFER, KLINE & WARREN INC.
MISSOURI CERTIFICATE OF AUTHORITY: F001398SO

Designed By: BDP
Drawn By: BDP
Checked By: MMH
Issue Date:

MICHAEL MELVIN HALL
E-30044

SHAFER, KLINE & WARREN, INC.
1400 Forum Boulevard, Suite 19A, Columbia, MO 65203-1997
573/442-4537 FAX: 573/442-4543
OFFICE LOCATIONS: Chillicothe, MO Columbia, MO Houston, TX Iola, KS Kansas City, MO Lenexa, KS Macon, MO North Kansas City, MO Tulsa, OK
CIVIL ENGINEERS ELECTRICAL ENGINEERS MECHANICAL ENGINEERS STRUCTURAL ENGINEERS LANDSCAPE ARCHITECTS LAND SURVEYORS LAND PLANNERS

GREEN CITY MODOT MAINT FACILITY
GREEN CITY, MISSOURI

SEWER EXTENSION
PLAN AND PROFILE

800160-050

SHEET NO. 2 OF 7

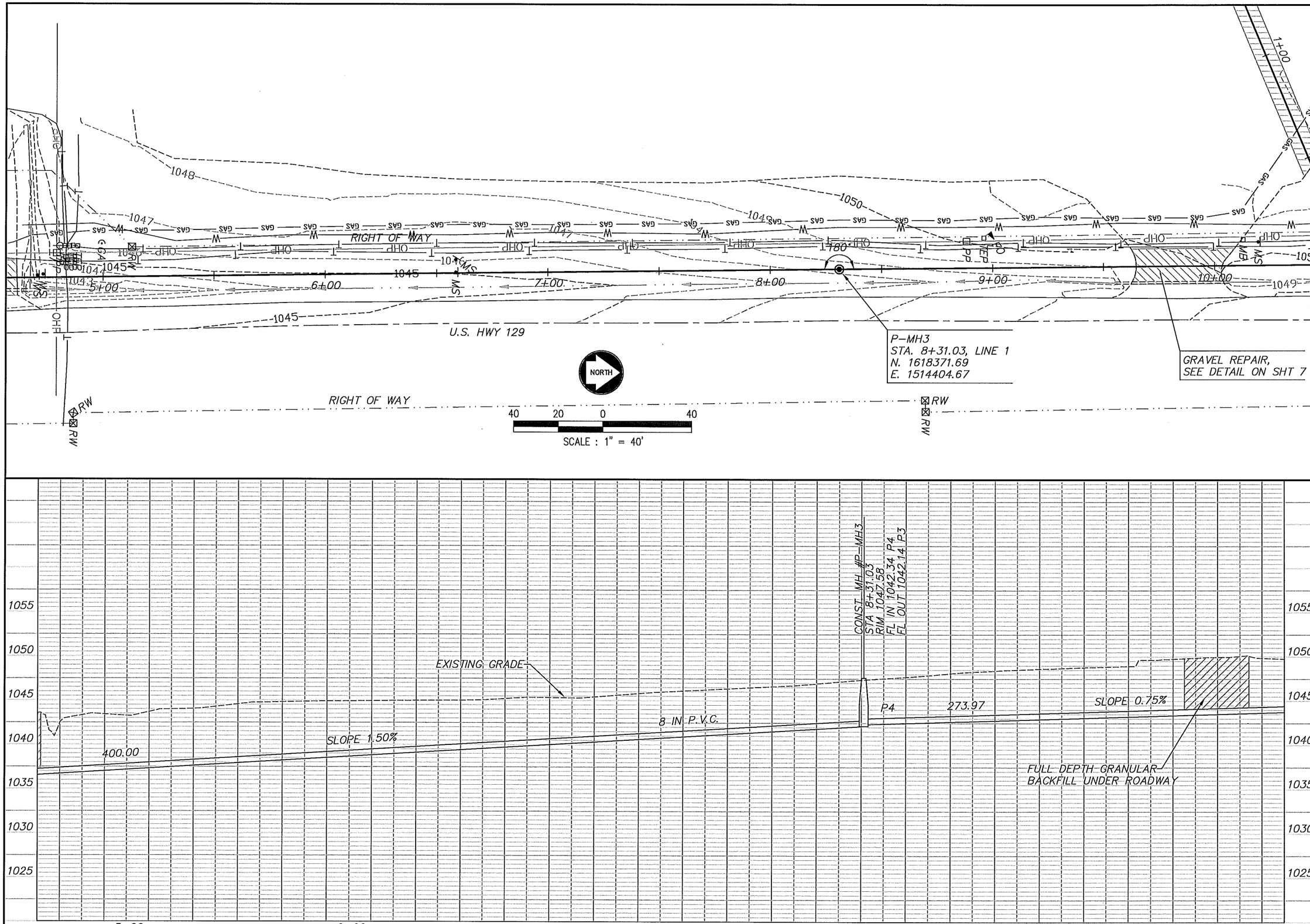

NO.	DATE	REVISIONS	BY	APP'D
5				
4				
3				
2				
1				

COPYRIGHT © 2009-SHAFER, KLINE & WARREN INC.
MISSOURI CERTIFICATE OF AUTHORITY: F001-39650

Designed By: BDP
Drawn By: BDP
Checked By: MMH
Issue Date:

MICHAEL MELVIN HALL
E-30044

SHAFER, KLINE & WARREN, INC.
1400 Forum Boulevard, Suite 19A, Columbia, MO 65203-1997
573/442-4537 FAX: 573/442-4543
OFFICE LOCATIONS: Chillicothe, MO Columbia, MO Houston, TX
Iola, KS Kansas City, MO Lenexa, KS
Macon, MO North Kansas City, MO Tulsa, OK
CIVIL ENGINEERS ELECTRICAL ENGINEERS MECHANICAL ENGINEERS STRUCTURAL ENGINEERS LANDSCAPE ARCHITECTS LAND SURVEYORS LAND PLANNERS

GREEN CITY MODOT MAINT FACILITY
GREEN CITY, MISSOURI

SEWER EXTENSION
PLAN AND PROFILE

800160-050

SHEET NO. 3 OF 7

S:\PROJ\800160-050\DWG\800160-050 PLAN & PROFILE.DWG
LAYOUT: PP2 BY: PERRIGO DATE: 1/21/2010
XREF DWG1: NONE XREF DWG2: NONE
XREF DWG3: NONE XREF DWG4: NONE

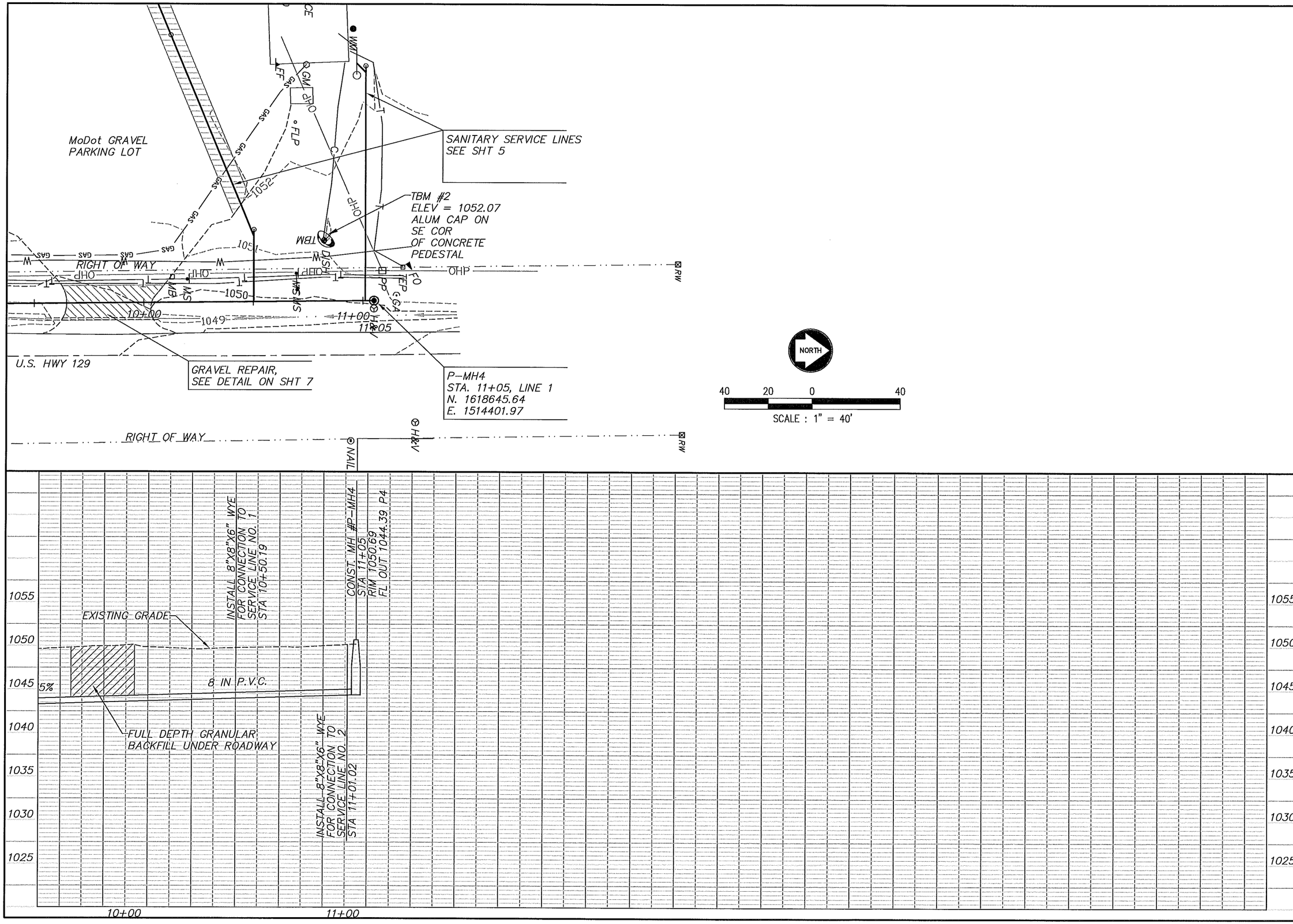

S:\PROJ\800160-050\DWG\800160-050 PLAN & PROFILE.DWG
LAYOUT: PP3 | BY: PERRIGO | DATE: 1/21/2010
XREF DWG1: NONE | XREF DWG2: NONE
XREF DWG3: NONE | XREF DWG4: NONE

NO.	DATE	REVISIONS	BY	APP'D
5				
4				
3				
2				
1				

COPYRIGHT © 2009-SHAFER, KLINE & WARREN INC.
MISSOURI CERTIFICATE OF AUTHORITY: F00139850

Designed By: BDP
Drawn By: BDP
Checked By: MMH
Issue Date:

MICHAEL MELVIN HALL
E-30044

SHAFER, KLINE & WARREN, INC.
1400 Forum Boulevard, Suite 19A, Columbia, MO 65203-1997
573/442-4537 FAX: 573/442-4543
OFFICE LOCATIONS: Chillicothe, MO Columbia, MO Houston, TX
Iola, KS Kansas City, MO Lenexa, KS
Macon, MO North Kansas City, MO Tulsa, OK
CIVIL ENGINEERS ELECTRICAL ENGINEERS MECHANICAL ENGINEERS STRUCTURAL ENGINEERS LANDSCAPE ARCHITECTS LAND SURVEYORS LAND PLANNERS

GREEN CITY MODOT MAINT FACILITY
GREEN CITY, MISSOURI

SEWER EXTENSION
PLAN AND PROFILE

800160-050

SHEET NO.
4 OF 7

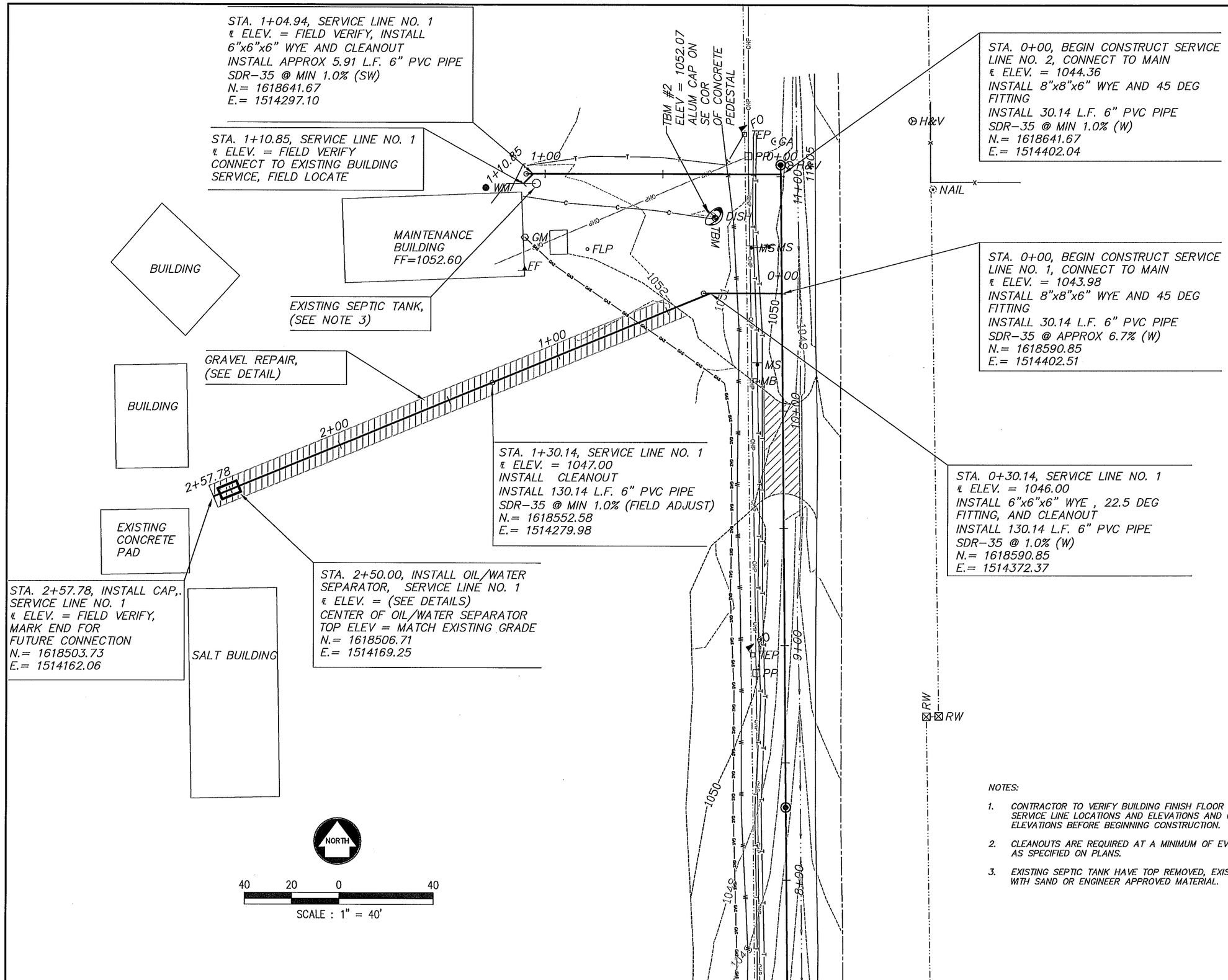

NOTES:

1. CONTRACTOR TO VERIFY BUILDING FINISH FLOOR ELEVATIONS, SERVICE LINE LOCATIONS AND ELEVATIONS AND OIL SEPARATOR LOCATIONS AND ELEVATIONS BEFORE BEGINNING CONSTRUCTION.
2. CLEANOUTS ARE REQUIRED AT A MINIMUM OF EVERY 100 FEET ON SERVICE LINES OR AS SPECIFIED ON PLANS.
3. EXISTING SEPTIC TANK HAVE TOP REMOVED, EXISTING SLUDGE REMOVED, AND FILLED WITH SAND OR ENGINEER APPROVED MATERIAL.

S:\PROJ\800160-050\DWG\800160-050SSWA-LOUT.DWG
LAYOUT: LAYOUT1 | BY: PERRIGO | DATE: 1/21/2010
XREF DWG1: NONE | XREF DWG2: NONE
XREF DWG3: NONE | XREF DWG4: NONE

NO.	DATE	REVISIONS	BY	APP'D
1				
2				
3				
4				
5				

COPYRIGHT © 2009-SHAFER, KLINE & WARREN INC.
MISSOURI CERTIFICATE OF AUTHORITY: F00139850

Designed By: BDP
Drawn By: BDP
Checked By: MMH
Issue Date:

MICHAEL MELVIN HALL
E-30044

SHAFER, KLINE & WARREN, INC.
1400 Forum Boulevard, Suite 19A, Columbia, MO 65203-1997
573/442-4537 FAX: 573/442-4543
OFFICE LOCATIONS: Chillicothe, MO Columbia, MO Houston, TX Iola, KS Kansas City, MO Lenexa, KS Macon, MO North Kansas City, MO Tulsa, OK
CIVIL ENGINEERS ELECTRICAL ENGINEERS MECHANICAL ENGINEERS STRUCTURAL ENGINEERS LANDSCAPE ARCHITECTS LAND SURVEYORS LAND PLANNERS

GREEN CITY MODOT MAINT FACILITY
GREEN CITY, MISSOURI

SEWER EXTENSION DETAILS

800160-050

SHEET NO. 5 OF 7

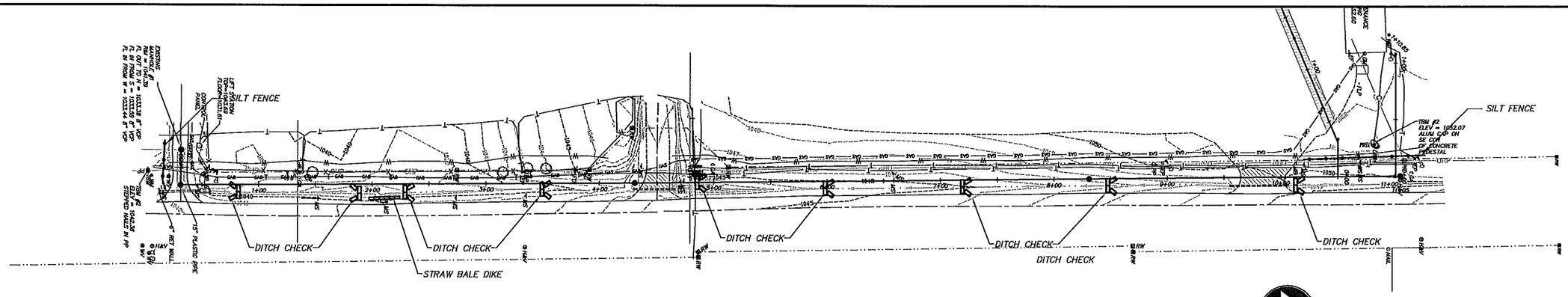

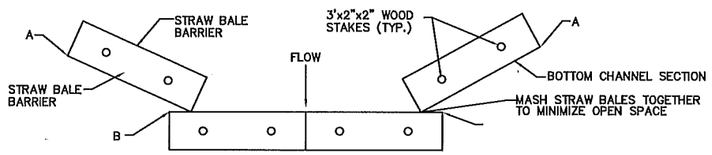

TOP VIEW

DITCH APPLICATION DETAILS

POINTS "A" SHOULD BE HIGHER THAN POINTS "B" TO INSURE FLOW THROUGH OR OVER BARRIER, NOT AROUND IT.

DITCH CHECK SPACING			
DITCH ℄ SLOPE %	SPACING (FT)	DITCH ℄ SLOPE %	SPACING (FT)
.05	400	5.5	38
1.0	200	6.0	35
1.5	133	6.5	30
2.0	100	7.0	28
2.5	80	7.5	26
3.0	66	8.0	25
3.5	57	8.5	23
4.0	50	9.0	22
4.5	44	9.5	21
5.0	40	10.0	20

TEMPORARY STRAW BALE DITCH CHECK

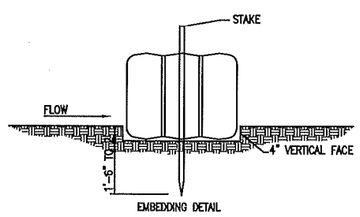

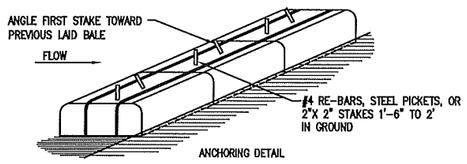

1. BALES SHALL BE PLACED IN A ROW WITH ENDS TIGHTLY ABUTTING THE ADJACENT BALES.
2. EACH BALE SHALL BE EMBEDDED IN THE SOIL A MINIMUM OF 4".
3. BALES SHALL BE SECURELY ANCHORED IN PLACE BY STAKES OR RE-BARS DRIVEN THROUGH THE BALES. THE FIRST STAKE IN EACH BALE SHALL BE ANGLED TOWARD PREVIOUSLY LAID BALE TO FORCE BALES TOGETHER.
4. INSPECTION SHALL BE FREQUENT AND REPAIR OR REPLACEMENT SHALL BE MADE PROMPTLY AS NEEDED.
5. BALES SHALL BE REMOVED WHEN THEY HAVE SERVED THEIR USEFULNESS SO AS NOT TO BLOCK OR IMPEDE STORM FLOW OR DRAINAGE BY THE OWNER.

STRAW BALE DIKE DETAIL

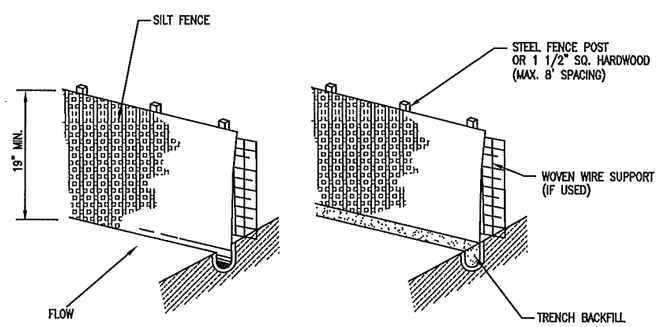

CONSTRUCTION SPECIFICATIONS

1. POSTS WHICH SUPPORT THE SILT FENCE SHALL BE INSTALLED ON A SLIGHT ANGLE TOWARD THE ANTICIPATED RUNOFF SOURCE AND SPACED AT A MAX. 8' APART OR TO SILT FENCE MANUFACTURER SPECIFICATIONS, WHICHEVER IS STRICTER.
2. SILT FENCE SHALL BE TRENCHED IN WITH A SPADE OR MECHANICAL TRENCHER SO THAT THE DOWNSLOPE FACE OF THE TRENCH IS FLAT AND PERPENDICULAR TO THE LINE OF FLOW.
3. THE TRENCH SHOULD BE A MINIMUM OF 6" DEEP 3-4" WIDE TO ALLOW FOR THE SILT FENCE TO BE LAID IN THE GROUND AND BACKFILLED.
4. SILT FENCE SHOULD BE SECURELY FASTENED TO EACH SUPPORT POST OR TO WOVEN WIRE WHICH IS IN TURN ATTACHED TO THE FENCE POSTS.
5. INSPECTION SHALL BE FREQUENT AND REPAIR OR REPLACEMENT SHALL BE MADE PROMPTLY AS NEEDED.
6. SILT FENCE SHALL BE REMOVED WHEN IT HAS SERVED ITS USEFULNESS SO AS NOT TO BLOCK OR IMPEDE STORM FLOW OR DRAINAGE.
7. SEDIMENT TRAPPED BY THIS PRACTICE SHALL BE UNIFORMLY DISTRIBUTED ON THE SOURCE AREA PRIOR TO TOPSOILING.
8. SILT FENCE SHALL BE MIRAFI-100X FILTER FABRIC OR APPROVED EQUAL.

SILT FENCE DETAIL

EROSION CONTROL NOTES

1. THE EROSION CONTROL FEATURES AND NOTES SHOWN ON THIS SHEET REPRESENT THE MINIMUM REQUIREMENTS ACCEPTABLE. LOCATIONS ARE TYPICAL AND MAY VARY ACCORDING TO CONTRACTORS STAGING AND LIMITS OF CONSTRUCTION.
2. IT SHALL BE EACH CONTRACTOR'S RESPONSIBILITY TO CONTROL EROSION AND PREVENT POLLUTION FOR ALL WORK WHICH THEY ARE DIRECTLY INVOLVED.
3. IT SHALL BE EACH CONTRACTORS RESPONSIBILITY TO PLACE ADDITIONAL CONTROL DEVICES AS REQUIRED DURING CONSTRUCTION TO PREVENT SOIL LOSS FROM THE SITE. IT SHALL ALSO BE EACH CONTRACTOR'S RESPONSIBILITY TO MAINTAIN THEIR EROSION CONTROL FEATURES IN PROPER WORKING CONDITION UNTIL THE SITE IS STABILIZED BY PAVEMENT, VEGETATION OR OTHER MEANS.
4. WHEN POSSIBLE, WITHOUT ADVERSELY AFFECTING CONSTRUCTION OPERATIONS, THE CONTRACTOR SHALL: MINIMIZE THE AMOUNT OF SURFACE AREA WHICH IS EXPOSED AT ONE TIME, LEAVE GRADED AREAS WITH A ROUGH TEXTURE, CONSTRUCT TEMPORARY TERRACES DURING GRADING OPERATIONS, AND LIMIT UNNECESSARY VEHICLE TRAFFIC IN GRADED AREAS.
5. THE SPILLAGE OF DEBRIS, INCLUDING THE TRACKING OF SOIL, OUTSIDE OF THE CONSTRUCTION LIMITS SHALL BE AVOIDED.
6. STRAW BALE DIKES OR SILT FENCES SHALL BE PLACED ON A CONTOUR ELEVATION ALONG THE DOWNHILL SIDE AND FOR THE FULL EXTENT OF THE DISTURBED AREAS WITHIN THE CONSTRUCTION LIMITS. THE LAST FIVE FEET ON EACH END OF RUN OF SILT FENCE/STRAW BALE DIKE SHALL BE PLACED FACING UPHILL AT 90 DEGREES TO THE CONTOUR LINE.
7. THE CONTRACTOR SHALL PREVENT SILT AND SEDIMENT FROM ENTERING THE STORM SEWER SYSTEM. STRAW BALE DIKES SHALL BE PLACED AROUND ALL STORM SEWER INLETS EXCEPT DURING CONSTRUCTION OPERATIONS WHICH REQUIRE THEIR REMOVAL.
8. CONTRACTOR SHALL INSPECT THEIR EROSION CONTROL DEVICES AFTER ALL RAINFALL EVENTS TO INSURE THEY ARE WORKING PROPERLY. THE CONTRACTOR SHALL ALSO INSPECT THE SITE AFTER ALL RAINFALL EVENTS AND ON A PERIODIC BASIS TO ASSESS THE NEED AND IF PRUDENT, INSTALL ADDITIONAL EROSION CONTROL DEVICES AS REQUIRED.
9. ALL AREAS UPON REACHING FINAL GRADE SHALL BE BROUGHT TO FINAL PLAN CONDITION (PAVED, MULCHED AND SEEDED, SODDED, OR OTHER) AS SOON AS POSSIBLE.

NO.	DATE	REVISIONS	BY	APP'D
1				
2				
3				
4				
5				

COPYRIGHT ©-2009-SHAFER, KLINE & WARREN INC.
MISSOURI CERTIFICATE OF AUTHORITY: F0013950

Designed By: BDP
Drawn By: BDP
Checked By: MMH
Issue Date:

MICHAEL MELVIN HALL
E-30044

SHAFER, KLINE & WARREN, INC.
1400 Forum Boulevard, Suite 19A, Columbia, MO 65203-1997
573/442-4537 FAX: 573/442-4543
OFFICE LOCATIONS: Chillicothe, MO Columbia, MO Houston, TX Iola, KS Kansas City, MO Lenexa, KS Macon, MO North Kansas City, MO Tulsa, OK
CIVIL ENGINEERS ELECTRICAL ENGINEERS MECHANICAL ENGINEERS STRUCTURAL ENGINEERS LANDSCAPE ARCHITECTS LAND SURVEYORS LAND PLANNERS

GREEN CITY MODOT MAINT FACILITY
GREEN CITY, MISSOURI

SEWER EXTENSION
EROSION CONTROL

800160-050

SHEET NO. 6 OF 7

S:\PROJ\800160-050\DWG\800160-050 EROSION CONTROL.DWG
LAYOUT: LAYOUT1 BY: PERRIGO DATE: 1/13/2010
XREF DWG1: NONE XREF DWG2: NONE
XREF DWG3: NONE XREF DWG4: NONE

BEFORE YOU
DIG - DRILL - BLAST
Call 1-800-344-7483
(TOLL FREE)
MISSOURI ONE CALL SYSTEM, INC.

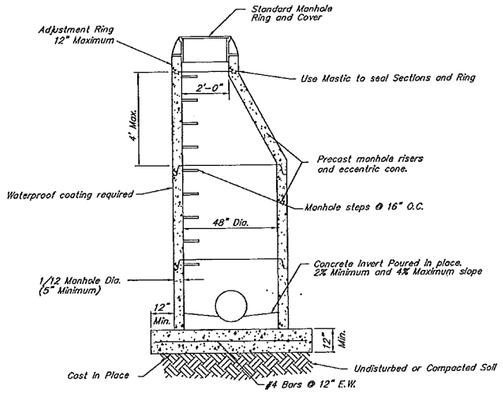

STANDARD ECCENTRIC MANHOLE DETAIL

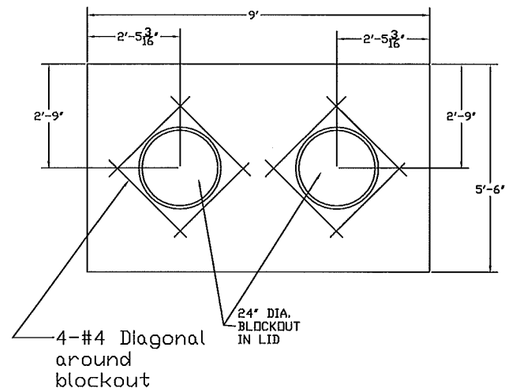

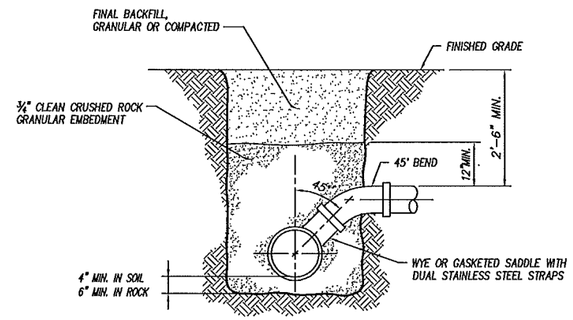

STANDARD SERVICE CONNECTION DETAIL

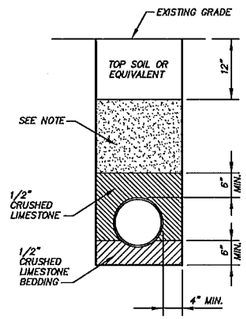

TRENCH OUTSIDE OF ROADWAY

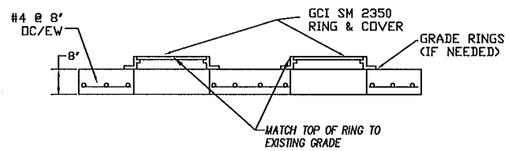

OIL/WATER SEPARATOR TOP

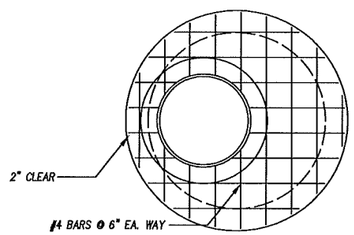

PLAN VIEW

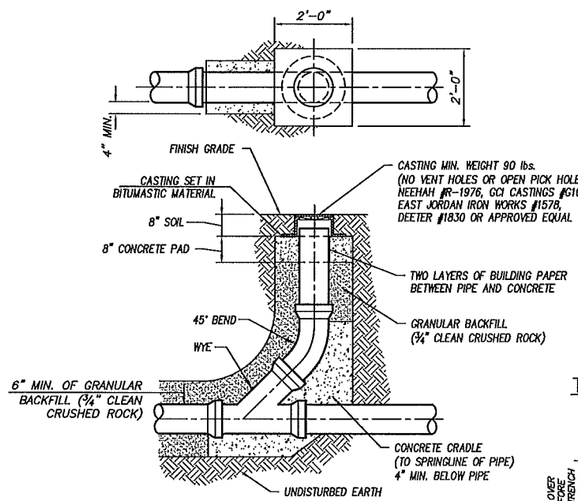

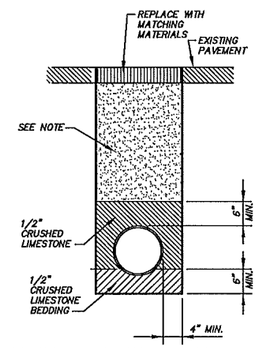

TRENCH IN ROADWAY AND GRAVEL LOT

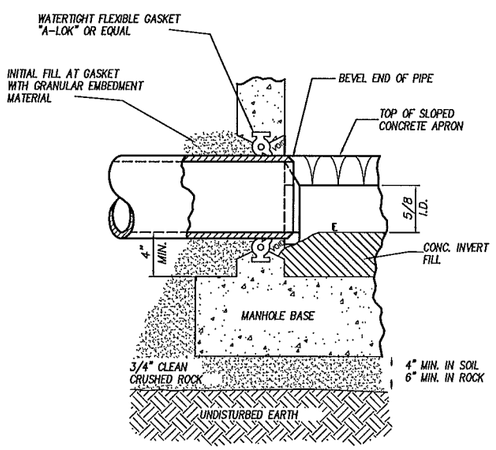

NOTE:
1. BITUMINOUS COATING ON EXTERIOR SURFACE OF MANHOLE SHALL NOT COME IN CONTACT WITH PIPE GASKET.
2. FOR CAST-IN-PLACE CONCRETE MANHOLES OR PRE-CAST WITH BOX-OUTS, THE PIPE GASKET SHALL BE A RUBBER LABYRINTH WATERSTOP WITH STAINLESS STEEL CLAMPING BANDS LOCATED AT CENTER OF WALL AND THE SPACE BETWEEN PIPE & WALL COMPLETELY GROUTED WITH NONSHRINKING MORTAR.
3. PIPE MAY PROJECT 1" MAXIMUM PAST INSIDE WALL OF MANHOLE. BUT NO CONTACT BETWEEN PIPE & INVERT.

MANHOLE GASKET DETAIL

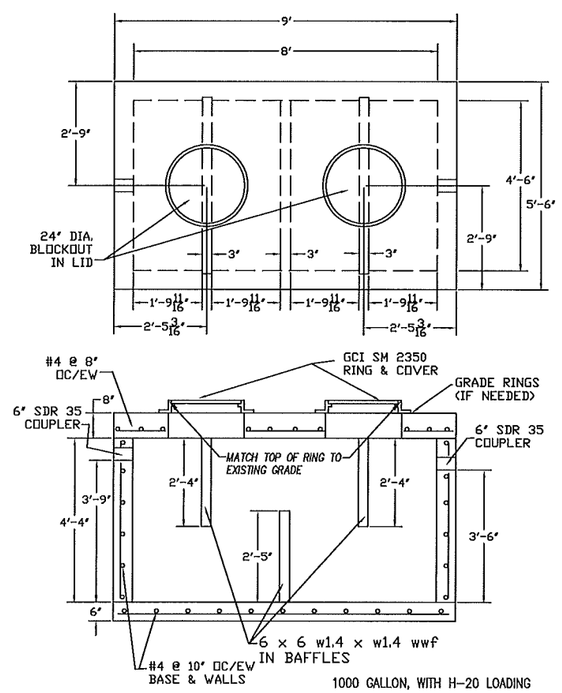

OIL/WATER SEPARATOR

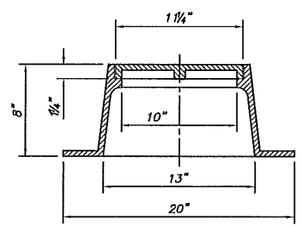

CLEANOUT DETAIL

NOTE: DISTANCE FROM CENTER OF DOWNSTREAM MANHOLE TO CENTER OF CLEANOUT SHALL BE 300 FEET OR LESS.

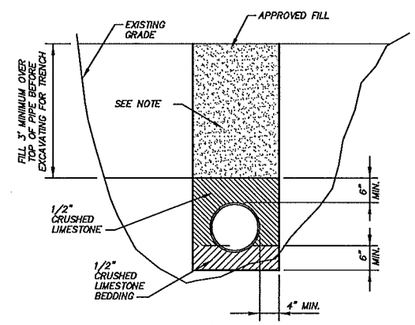

TRENCH IN FILL AREA

NOTE:
TRENCHES OUTSIDE OF ROADWAYS ARE TO BE COMPACTED TO A MINIMUM OF 90% OPTIMUM DENSITY. TRENCHES WITHIN ROADWAYS ARE TO BE COMPACTED TO A MINIMUM OF 95% OPTIMUM DENSITY.

PIPE EMBEDMENT DETAILS

COPYRIGHT © - 2009 - SHAFER, KLINE & WARREN INC.
MISSOURI CERTIFICATE OF AUTHORITY: F001139850

NO.	DATE	REVISIONS	BY	APP'D
5				
4				
3				
2				
1				

Designed By: BDP
Drawn By: BDP
Checked By: MWH
Issue Date:

MICHAEL MELVIN HALL
F-30044

SHAFER, KLINE & WARREN, INC.
1400 Forum Boulevard, Suite 19A, Columbia, MO 65203-1997
573/442-4537 FAX: 573/442-4543
OFFICE LOCATIONS: Chillicothe, MO Columbia, MO Houston, TX Iola, KS Kansas City, MO Lenexa, KS Macon, MO North Kansas City, MO Tulsa, OK
CIVIL ENGINEERS ELECTRICAL ENGINEERS MECHANICAL ENGINEERS STRUCTURAL ENGINEERS LANDSCAPE ARCHITECTS LAND SURVEYORS LAND PLANNERS

GREEN CITY MODOT MAINT FACILITY
GREEN CITY, MISSOURI

SEWER EXTENSION DETAILS

800160-050

SHEET NO. 7 OF 7

S:\PROJ\800160-050\DWG\800160-050-DETAILS.DWG
LAYOUT: LAYOUT1 BY: PERRIGO DATE: 1/21/2010
XREF DWG1: NONE XREF DWG2: NONE
XREF DWG3: NONE XREF DWG4: NONE