BEFORE YOU
DIG – DRILL – BLAST
1-800-344-7483
(TOLL FREE)
MISSOURI ONE CALL SYSTEM, INC.

TRENTON MoDOT MAINTENANCE FACILITY SEWER EXTENSION

TRENTON, GRUNDY COUNTY, MISSOURI

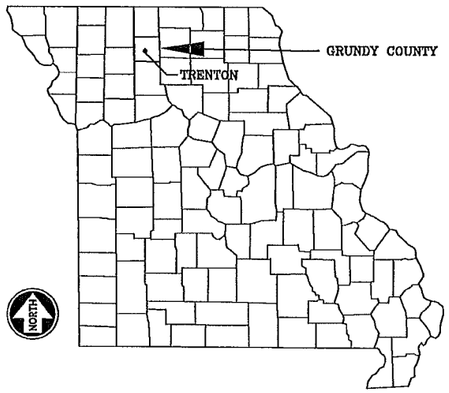

KEY MAP
SHOWING LOCATION OF COUNTY

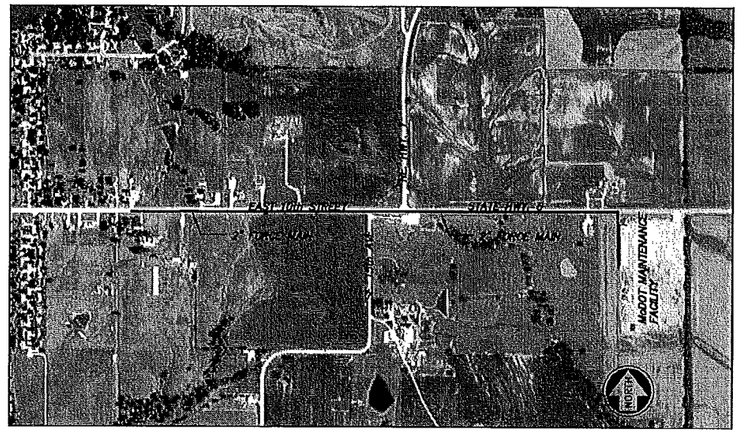

PROJECT LOCATION MAP
NOT TO SCALE

INDEX OF SHEETS

1	COVER SHEET
2	LIFT STATION SITE PLAN
3	PLAN & PROFILE, STA. 0+00 TO STA.13+50
4	PLAN & PROFILE, STA. 13+50 TO STA. 27+50
5	PLAN & PROFILE, STA. 27+50 TO STA. 41+50
6	PLAN & PROFILE, STA. 41+50 TO STA. 54+00
7	PUMP STATION DETAILS
8	ELECTRICAL DETAILS
9	MISC DETAILS
10	MISC DETAILS
11	EROSION CONTROL DETAILS

NOTES TO CONTRACTOR:

1) UNDERGROUND UTILITIES HAVE BEEN SHOWN FROM APPROXIMATE LOCATIONS PROVIDED BY UTILITY COMPANIES, THEREFORE THEIR LOCATIONS MUST BE CONSIDERED APPROXIMATE ONLY. VERIFICATION OF THE LOCATIONS OF UNDERGROUND UTILITIES, SHOWN OR NOT SHOWN, WILL BE THE RESPONSIBILITY OF THE CONSTRUCTION CONTRACTOR.

2) CONTRACTOR SHALL MAKE EVERY EFFORT TO ASSURE MINIMUM CLEARANCE BETWEEN SEWER LINES AND WATER LINES (10' HORIZONTAL, 18" VERTICAL AT CROSSINGS).

3) ALL ROADS, DRIVEWAYS, CULVERTS, SIDEWALKS, FENCES, AND LANDSCAPING DAMAGED DURING CONSTRUCTION SHALL BE REPAIRED OR REPLACED.

4) ALL CONSTRUCTION SHALL BE IN ACCORDANCE WITH THE CITY OF MARSHALL STANDARD SPECIFICATIONS FOR GRAVITY SANITARY SEWER CONSTRUCTION

5) ALL EXCAVATION WITH THE STREET RIGHT-OF-WAY SHALL BE BACKFILLED WITH GRANULAR MATERIAL OR COMPACTED EARTH FILL.

6) ALL SEWER GREATER THAN 15 FEET IN DEPTH SHALL BE A MINIMUM OF SDR 26. ALL MANHOLES GREATER THAN 18 FEET IN DEPTH SHALL HAVE A DOUBLE STEEL REINFORCEMENT PER CITY OF TRENTON SPECIFICATIONS.

7) ALL EROSION CONTROL DEVICES SHALL BE INSTALLED IN CONFORMITY WITH THE CITY OF TRENTON MISSOURI STANDARDS OR STATE OF MISSOURI MINUMUM STANTARES.

8) IT IS THE INTENT OF THESE PLANS TO COMPLY WITH THE REQUIREMENTS OF THE MISSOURI CLEAN WATER COMMISSION.

9) SILT FENCE SHALL BE PLACED AS INDICATED ON THE PLANS

UTILITIES

SEWER – TRENTON MUNICIPAL UTILITIES
1100 MAIN STREET
TRENTON, MO 64683
(660) 359-2281

ELECTRIC – TRENTON MUNICIPAL UTILITIES
1100 MAIN STREET
TRENTON, MO 64683
(660) 359-2281

WATER – TRENTON MUNICIPAL UTILITIES
1100 MAIN STREET
TRENTON, MO 64683
(660) 359-2281

STATE OF MISSOURI
MICHAEL MELVIN HALL
NUMBER E-30044
REGISTERED PROFESSIONAL ENGINEER
12-8-09

BENCHMARK

BENCHMARK

TBM= SET STEPPED 60D NAILS IN NE SIDE OF POWER POLE AT SOUTH SIDE OF HWY 6, DUE NORTH OF DUPLEX APRT # 3912, ELEVation = 844.09

TBM= SET CHISLED SQUARE ON TOP OF NW CORNER OF CONCRETE RETAINING WALL, NEAR PROPANE TANKS. ELEVation = 818.44

S:\PROJ\800160\DWG\DWG COLUMBIA\800160-030-COVER.DWG
LAYOUT: COVER | BY: PERRIGO | DATE: 10/30/2009
XREF DWG1: NONE | XREF DWG2: NONE
XREF DWG3: NONE | XREF DWG4: NONE

NO.	DATE	REVISIONS	BY	APP'D
1				
2				
3				
4				
5				

Designed By: RW
Drawn By: ELM
Checked By: MMH
Issue Date:

COPYRIGHT © 2009 SHAFER, KLINE & WARREN INC.
MISSOURI CERTIFICATE OF AUTHORITY: F00173930

MICHAEL MELVIN HALL
E-30044

SHAFER, KLINE & WARREN, INC.
1400 Forum Boulevard, Suite 19A, Columbia, MO 65203-1997
573/442-4537 FAX: 573/442-4543
OFFICE LOCATIONS: Chillicothe, MO; Columbia, MO; Houston, TX; Iola, KS; Kansas City, MO; Lenexa, KS; Macon, MO; North Kansas City, MO; Tulsa, OK
CIVIL ENGINEERS ELECTRICAL ENGINEERS MECHANICAL ENGINEERS STRUCTURAL ENGINEERS LANDSCAPE ARCHITECTS LAND SURVEYORS LAND PLANNERS

TRENTON MODOT MAINT FACILITY
TRENTON, MISSOURI

SEWER EXTENSION
COVER SHEET

800160-030

SHEET NO.
1 OF 11

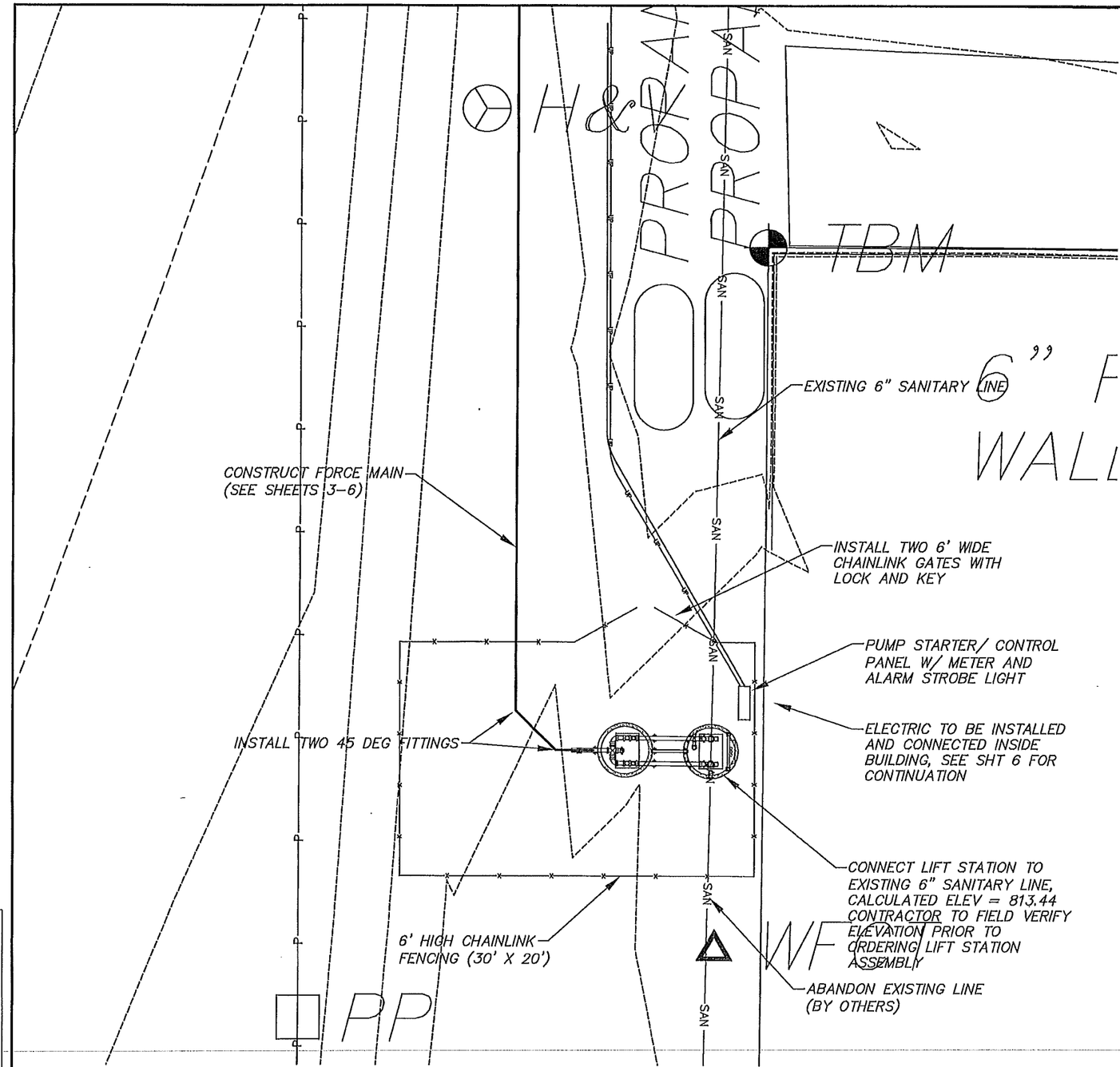

LEGEND

IB_E	EXISTING IRON BAR	H&V	CONTROL POINT
IBPC_E	EXISTING IRON BAR WITH PLASTIC CAP	TBM	TEMPORARY BENCHMARK
SSMH	SANITARY SEWER MANHOLE	FPST	FENCE POST
WM	WATER METER	WP	WOOD POST
WV	WATER VALVE	STNP	STONE POST
WFCT	WATER FAUCET	MB	MAIL BOX
RW	RIGHT-OF-WAY MARKER		TREE
FH	FIRE HYDRANT		BUSH
TEP	TELEPHONE PEDESTAL		
WS	WOOD SIGN		
MS	METAL SIGN		
GA	GUY ANCHOR		
PP	POWER POLE		
PPU	POWER POLE W/UNDERGROUND		
PPT	POWER POLE WITH TRANSFORMER		
	LIGHT POLE		
PRISR	POWER RISER		
TP	TELEPHONE POLE		
TMH	TELEPHONE MANHOLE		
GREG	GAS REGULATOR		

STATE OF MISSOURI
MICHAEL MELVIN HALL
NUMBER E-30044
REGISTERED PROFESSIONAL ENGINEER
12-8-09

NO.	DATE	REVISIONS	BY	APP'D
1				
2				
3				
4				
5				

Designed By:
Drawn By:
Checked By:
Issue Date:

COPYRIGHT © -2009-SHAFER, KLINE & WARREN INC.
MISSOURI CERTIFICATE OF AUTHORITY: F001399SO

SHAFER, KLINE & WARREN, INC.
1400 Forum Boulevard, Suite 19A, Columbia, MO 65203-1997
573/442-4537 FAX: 573/442-4543
OFFICE LOCATIONS: Chillicothe, MO Columbia, MO Houston, TX Iola, KS Kansas City, MO Lenexa, KS Macon, MO North Kansas City, MO Tulsa, OK
CIVIL ENGINEERS ELECTRICAL ENGINEERS MECHANICAL ENGINEERS STRUCTURAL ENGINEERS LANDSCAPE ARCHITECTS LAND SURVEYORS LAND PLANNERS

TRENTON MoDOT MAINT FACILITY
TRENTON, MISSOURI

LIFT STATION SITE PLAN

800160-030

SHEET NO. 2 OF 11

S:\PROJ\800160\DWG\DWG COLUMBIA\800160-030-CS-PP.DWG
LAYOUT: SHT2 BY: PERRIGO DATE: 12/8/2009
XREF DWG1: NONE XREF DWG2: NONE
XREF DWG3: NONE XREF DWG4: NONE

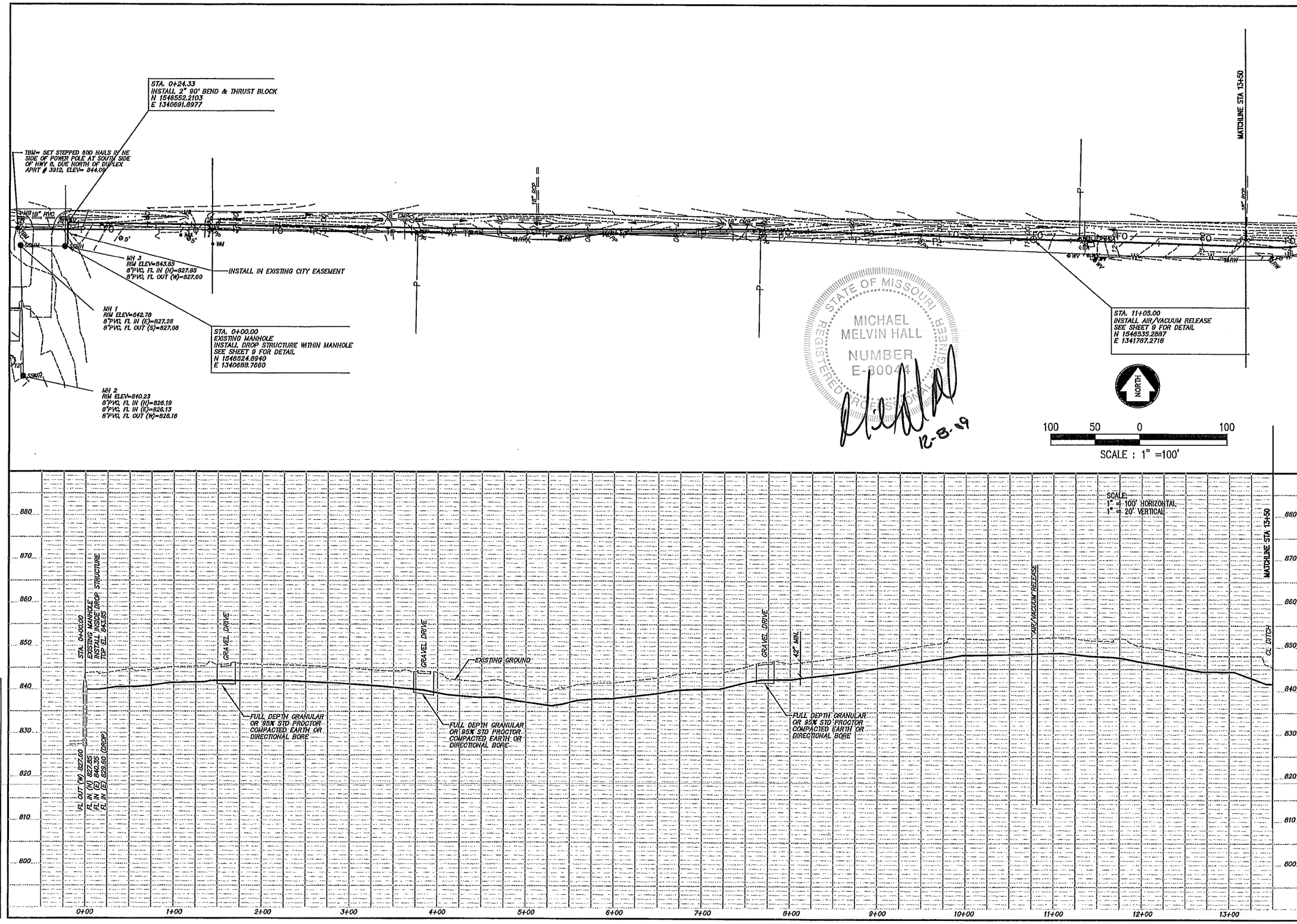

NO.	DATE	REVISIONS	BY	APP'D
5				
4				
3				
2				
1				

Designed By:
Drawn By:
Checked By:
Issue Date:

COPYRIGHT © 2000-SHAFER, KLINE & WARREN INC.
MISSOURI CERTIFICATE OF AUTHORITY: F01139530

SHAFER, KLINE & WARREN, INC.
1400 Forum Boulevard, Suite 194, Columbia, MO 65203-1997
573/442-4537 FAX: 573/442-4543
OFFICE LOCATIONS: Chillicothe, MO Columbia, MO Houston, TX Iola, KS Kansas City, MO Lenexa, KS Macon, MO North Kansas City, MO Tulsa, OK
CIVIL ENGINEERS ELECTRICAL ENGINEERS MECHANICAL ENGINEERS STRUCTURAL ENGINEERS LANDSCAPE ARCHITECTS LAND SURVEYORS LAND PLANNERS

TRENTON MoDOT MAINT FACILITY
TRENTON, MISSOURI

PLAN & PROFILE
STA. 0+00 TO STA.13+50

800160-030

SHEET NO.
3 OF 11

S:\PROJ\800160\DWG\DWG COLUMBIA\800160-030-CS-PP.DWG
LAYOUT: SHT3 | BY: PERRIGO | DATE: 12/8/2009
XREF DWG1: NONE | XREF DWG2: NONE
XREF DWG3: NONE | XREF DWG4: NONE

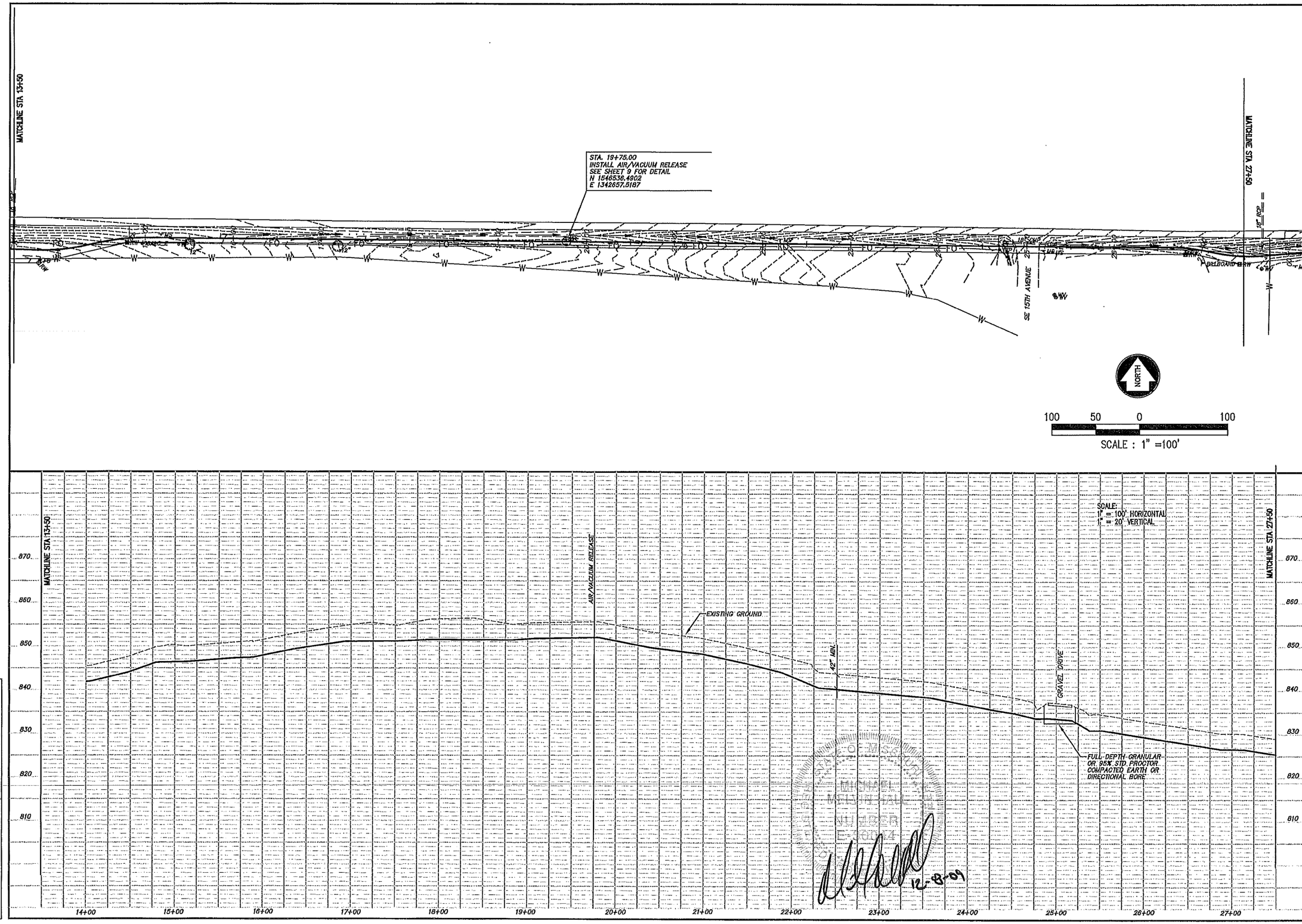

NO.	DATE	REVISIONS	BY	APP'D
5				
4				
3				
2				
1				

COPYRIGHT © - 2009 - SHAFER, KLINE & WARREN INC.
MISSOURI CERTIFICATE OF AUTHORITY: F-0139550

Designed By:
Drawn By:
Checked By:
Issue Date:

SHAFER, KLINE & WARREN, INC.
1400 Forum Boulevard, Suite 194, Columbia, MO 65203-1997
573/442-4537 FAX: 573/442-4543

OFFICE LOCATIONS:
Chillicothe, MO
Columbia, MO
Houston, TX

Macon, MO
North Kansas City, MO
Tulsa, OK

Iola, KS
Kansas City, MO
Lenexa, KS

CIVIL ENGINEERS ELECTRICAL ENGINEERS MECHANICAL ENGINEERS STRUCTURAL ENGINEERS LANDSCAPE ARCHITECTS LAND SURVEYORS LAND PLANNERS

TRENTON MoDOT MAINT FACILITY
TRENTON, MISSOURI

PLAN & PROFILE
STA. 13+50 TO STA. 27+50

800160-030

SHEET NO.
4 OF 11

S:\PROJ\800160\DWG\DWG COLUMBIA\800160-030-CS-PP.DWG
LAYOUT: SHT4 | BY: PERRIGO | DATE: 12/9/2009
XREF DWG1: NONE | XREF DWG2: NONE
XREF DWG3: NONE | XREF DWG4: NONE

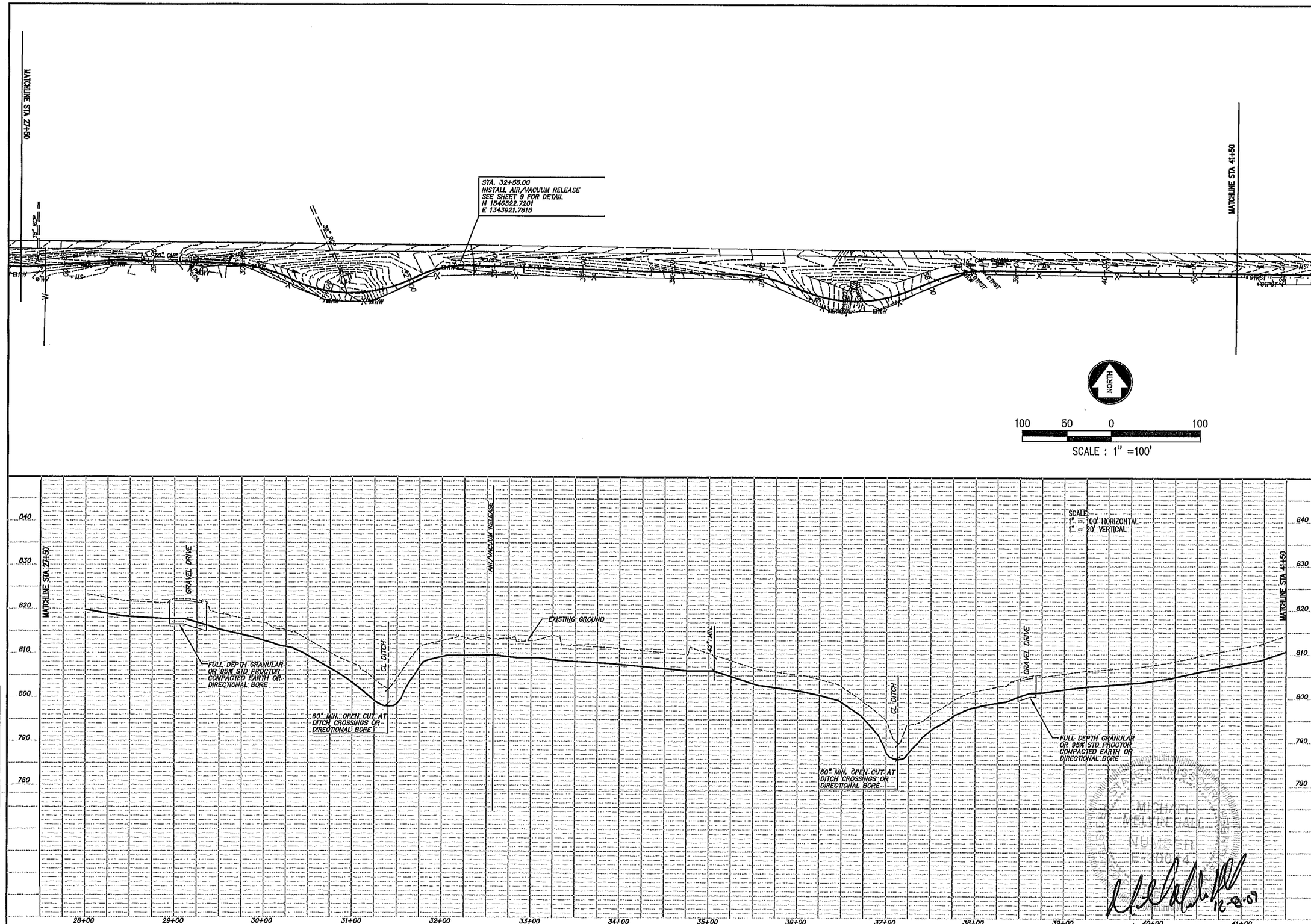

S:\PROJ\800160\DWG\DWG COLUMBIA\800160-030-CS-PP.DWG
LAYOUT: SHT15 BY: PERRIGO DATE: 12/8/2009
XREF DWG1: NONE XREF DWG2: NONE
XREF DWG3: NONE XREF DWG4: NONE

NO.	DATE	REVISIONS	BY	APP'D
5				
4				
3				
2				
1				

Designed By:
Drawn By:
Checked By:
Issue Date:

COPYRIGHT © 2009-SHAFER, KLINE & WARREN INC.
MISSOURI CERTIFICATE OF AUTHORITY: F001139550

SHAFER, KLINE & WARREN, INC.
1400 Forum Boulevard, Suite 194, Columbia, MO 65203-1997
573/442-4537 FAX: 573/442-4543
OFFICE LOCATIONS: Columbia, MO; Jefferson City, MO; Columbia, MO; Houston, TX; Iola, KS; Kansas City, MO; Lenexa, KS; Mason, MO; North Kansas City, MO; Tulsa, OK
CIVIL ENGINEERS ELECTRICAL ENGINEERS MECHANICAL ENGINEERS STRUCTURAL ENGINEERS LANDSCAPE ARCHITECTS LAND SURVEYORS LAND PLANNERS

TRENTON MoDOT MAINT FACILITY
TRENTON, MISSOURI

PLAN & PROFILE
STA. 27+50 TO STA. 41+50

800160-030

SHEET NO.
5 OF 11

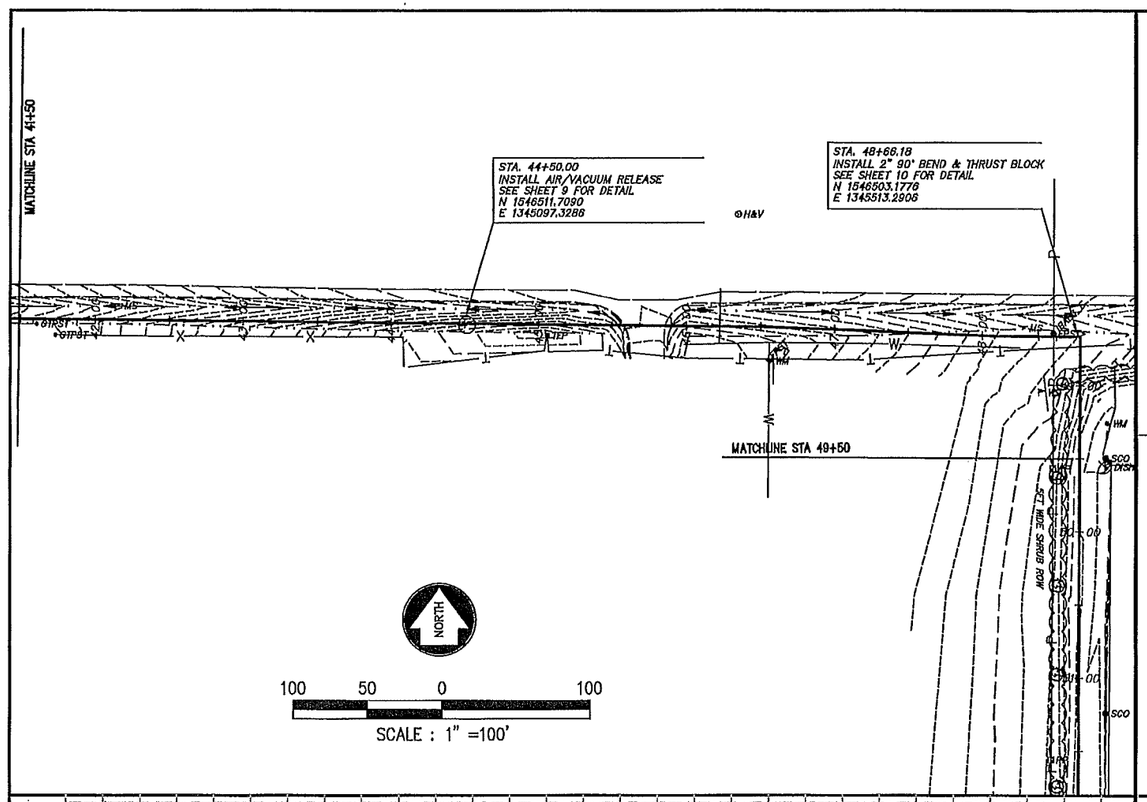

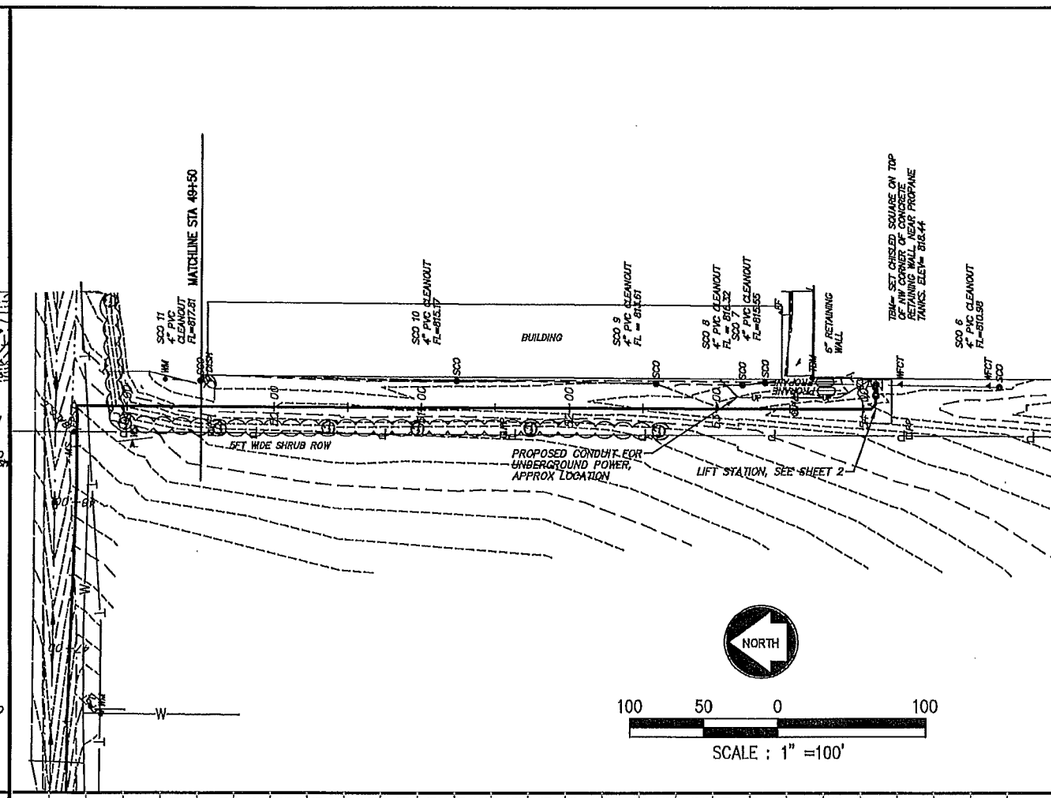

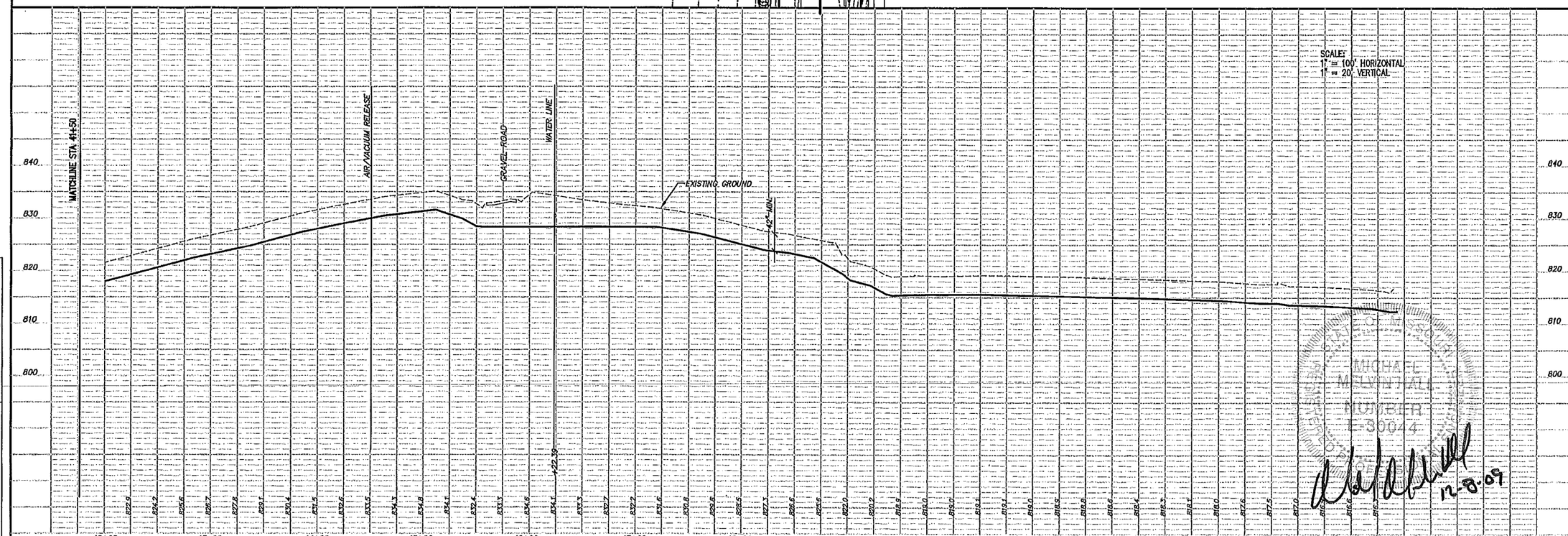

S:\PROJ\800160\DWG\DWG COLUMBIA\800160-030-CS-PP.DWG			
LAYOUT: SHT6	BY: PERRIGO	DATE: 12/8/2009	
XREF DWG1: NONE		XREF DWG2: NONE	
XREF DWG3: NONE		XREF DWG4: NONE	

NO.	DATE	REVISIONS	BY	APP'D
1				
2				
3				
4				
5				

COPYRIGHT © 2009-SHAFER, KLINE & WARREN INC.

MISSOURI CERTIFICATE OF AUTHORITY: F0139850

Designed By:
Drawn By:
Checked By:
Issue Date:

SHAFER, KLINE & WARREN, INC.
1400 Forum Boulevard, Suite 19A, Columbia, MO 65203-1997
573/442-4537 FAX: 573/442-4543

OFFICE LOCATIONS: Chillicothe, MO Columbia, MO Houston, TX Iola, KS Kansas City, KS Lenexa, KS Macon, MO North Kansas City, MO Tulsa, OK

CIVIL ENGINEERS ELECTRICAL ENGINEERS MECHANICAL ENGINEERS STRUCTURAL ENGINEERS LANDSCAPE ARCHITECTS LAND SURVEYORS LAND PLANNERS

MICHAEL MELVIN HALL
NUMBER E-30044
STATE OF MISSOURI
12-8-09

TRENTON MoDOT MAINT FACILITY
TRENTON, MISSOURI

PLAN & PROFILE
STA. 41+50 TO STA. 54+00

800160-030

SHEET NO. 6 OF 11

NON-CLOG PUMP STATION TABLE

STATION	WETWELL DIA	WETWELL HATCH	DISCHARGE PIPE SIZE	TOP SLAB ELEV.	WETWELL INV. ELEV.	DIM "A"	DIM. "B"	DIM. "C"	DIM. "D"
TRENTON MAINTENANCE COMPLEX	60" DIA. CONCRETE	30" x48" MIN.	2"	817.50	804.00	18"	12"	6"	6"
--	--	--	--	--	--	--	--	--	--

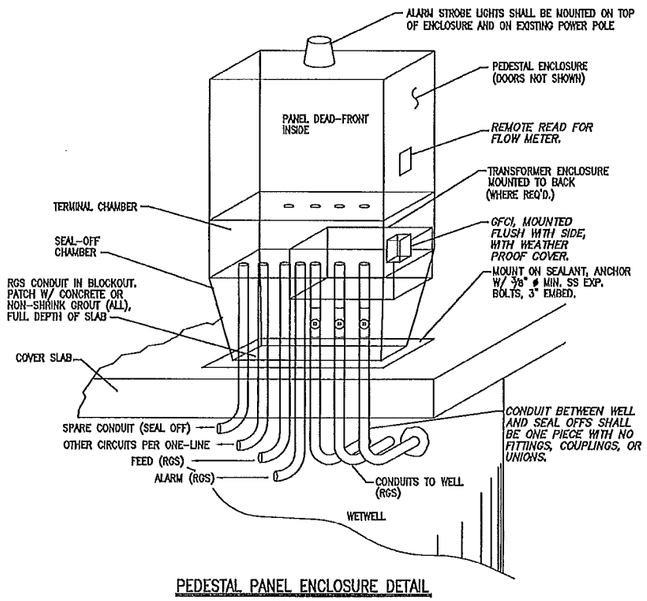

PEDESTAL PANEL ENCLOSURE DETAIL

NO SCALE

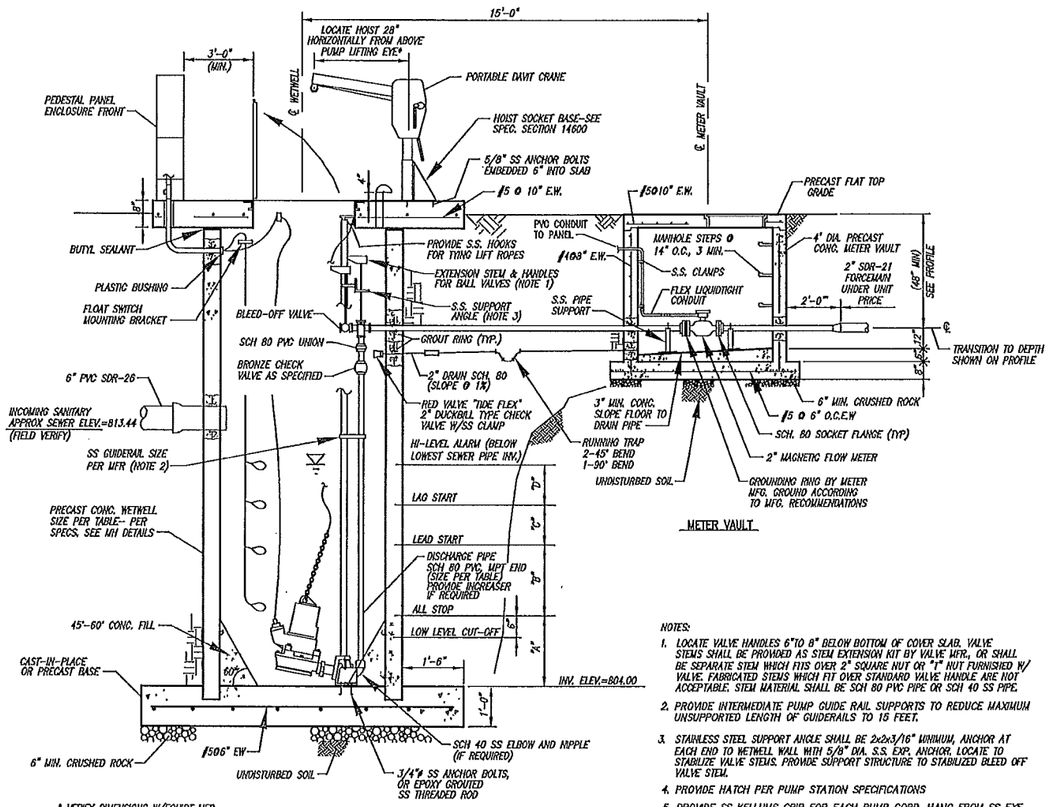

NOTES:

1. LOCATE VALVE HANDLES 6"TO 8" BELOW BOTTOM OF COVER SLAB. VALVE STEMS SHALL BE PROVIDED AS STEM EXTENSION KIT BY VALVE MFR, OR SHALL BE SEPARATE STEM WHICH FITS OVER 2" SQUARE NUT OR "T" NUT FURNISHED W/ VALVE. FABRICATED STEMS WHICH FIT OVER STANDARD VALVE HANDLE ARE NOT ACCEPTABLE. STEM MATERIAL SHALL BE SCH 80 PVC PIPE OR SCH 40 SS PIPE.
2. PROVIDE INTERMEDIATE PUMP GUIDE RAIL SUPPORTS TO REDUCE MAXIMUM UNSUPPORTED LENGTH OF GUIDERAILS TO 15 FEET.
3. STAINLESS STEEL SUPPORT ANGLE SHALL BE 2x2x3/16" MINIMUM, ANCHOR AT EACH END TO WETWELL WALL WITH 5/8" DIA. S.S. EXP. ANCHOR. LOCATE TO STABILIZE VALVE STEMS. PROVIDE SUPPORT STRUCTURE TO STABILIZED BLEED OFF VALVE STEM.
4. PROVIDE HATCH PER PUMP STATION SPECIFICATIONS
5. PROVIDE SS KELLUMS GRIP FOR EACH PUMP CORD. HANG FROM SS EYE HOOK ANCHORED TO VERTICAL FACE OF HATCH OPENING ON EACH SIDE.
6. CONTRACTOR SHALL PAY ATTENTION TO THE PIPING LAYOUT, TO ENSURE THAT THE HATCH LOCATION AND PUMP BASE LOCATION ALLOWS ROOM IN WETWELL FOR FULL WIDTH OF DISCHARGE HEADER. CONTRACTOR SHALL BEFORE PRE-CASTING LID, SUBMIT TO THE ENGINEER A SCALED SKETCH WITH DIMENSIONS, SHOWING:PUMP LOCATION, HATCH SIZE AND LOCATION, RISER PIPE LOCATION, AND DISCHARGE HEADER LOCATION. THIS SKETCH SHALL BE USED FOR THE INSTALLATION OF COMPONENTS. OFFSET OF PUMP RISERS MAY BE NECESSARY, AND IF SO SHALL BE DONE WITH SCHEDULE 80 22 1/2° BENDS (45° BENDS WILL NOT BE PERMITTED)

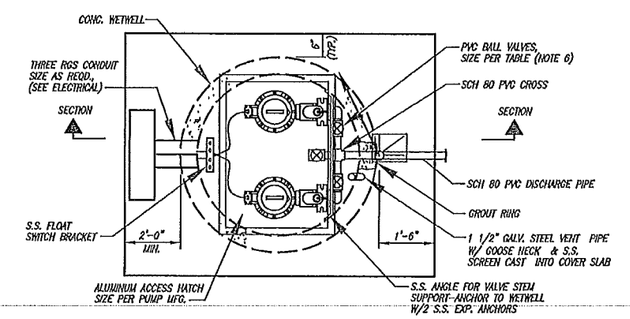

PLAN

NOTE: SEE SITE PLAN FOR ACTUAL ORIENTATION OF PIPING, CONTROL PANEL, AND ELECTRICAL.

* VERIFY DIMENSIONS W/EQUIPT MFR.

PUMP STATION ARRANGEMENT PLAN

NO SCALE

STATE OF MISSOURI
MICHAEL MELVIN HALL
NUMBER E-30044
REGISTERED PROFESSIONAL ENGINEER

12-8-09

NO.	DATE	REVISIONS	BY	APP'D
5				
4				
3				
2				
1				

Designed By:
Drawn By:
Checked By:
Issue Date:

COPYRIGHT © 2009-SHAFER, KLINE & WARREN INC.
MISSOURI CERTIFICATE OF AUTHORITY: F-001139550

SHAFER, KLINE & WARREN, INC.
1400 Forum Boulevard, Suite 19A, Columbia, MO 65203-1997
573/442-4537 FAX: 573/442-4543
OFFICE LOCATIONS: Chillicothe, MO Columbia, MO Houston, TX Iola, KS Kansas City, MO Lenexa, KS Macon, MO North Kansas City, MO Tulsa, OK
CIVIL ENGINEERS ELECTRICAL ENGINEERS MECHANICAL ENGINEERS STRUCTURAL ENGINEERS LANDSCAPE ARCHITECTS LAND SURVEYORS LAND PLANNERS

TRENTON MoDOT MAINT FACILITY
TRENTON, MISSOURI

PUMP STATION DETAILS

800160-030

SHEET NO. 7 OF 11

S:\PROJ\800160\DWG\DWG COLUMBIA\800160-030-DETAILS.DWG
LAYOUT: SHT7 BY: PERRIGO DATE: 10/30/2009
XREF DWG1: NONE XREF DWG2: NONE
XREF DWG3: NONE XREF DWG4: NONE

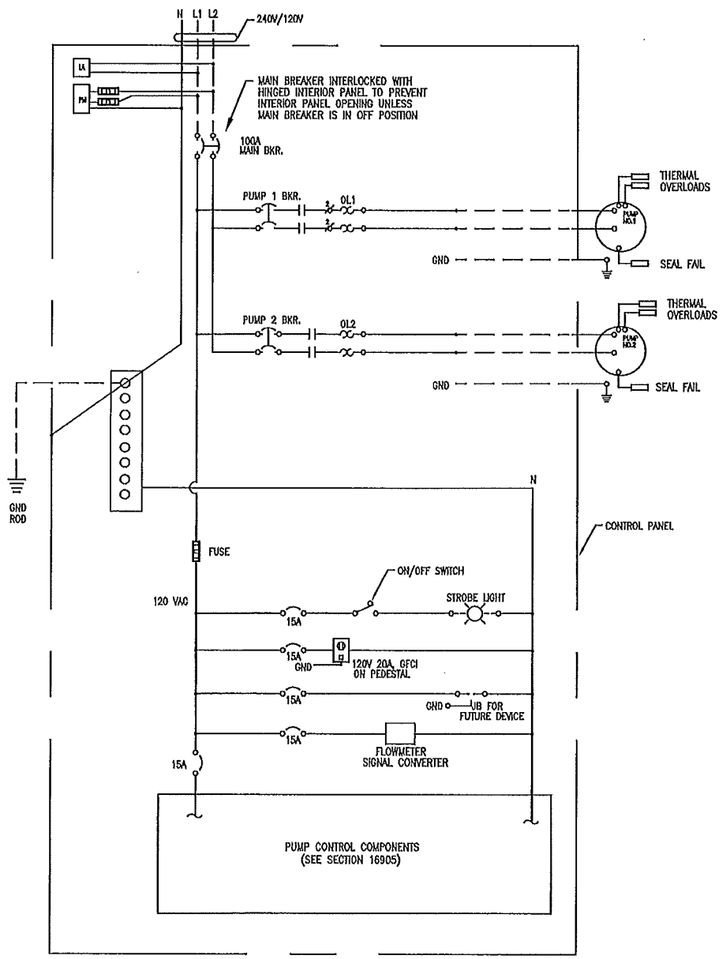

DUPLEX PUMP CONTROL PANEL SCHEMATIC

LEGEND

M1,M2	– MOTOR CONTACTORS
OL1,OL2	– OVERLOADS
TP1,TP2	– THERMAL PROTECTORS
GND	– EQUIP. GROUND, GROUND
EA	– ELECTRIC ALTERNATOR
FS5	– FLOAT SWITCH LOW WATER CUTOFF
FS4	– FLOAT SWITCH 1– PUMP OFF
FS3	– FLOAT SWITCH 2– PUMP ON
FS2	– FLOAT SWITCH 3– LAG PUMP ON
FS1	– FLOAT SWITCH 4– HIGH LEVEL ALARM
PM	– PHASE MONITOR
	WIRING WITHIN PANEL
	FIELD WIRING
	CONTROL PANEL TERMINALS
	EQUIP. TERMINALS
LA	LIGHTING ARRESTOR
	ULTRASAFE FUSES, DISCONNECT RATED WITH INDICATOR "FUSE-BLOWN"
	CIRCUIT BREAKER
	THERMAL MAGNETIC CIRCUIT BREAKER

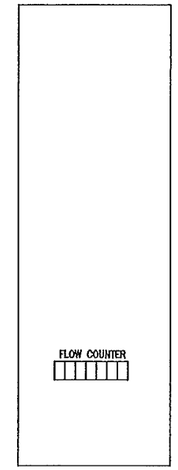

SIDE OF ENCLOSURE
NO SCALE

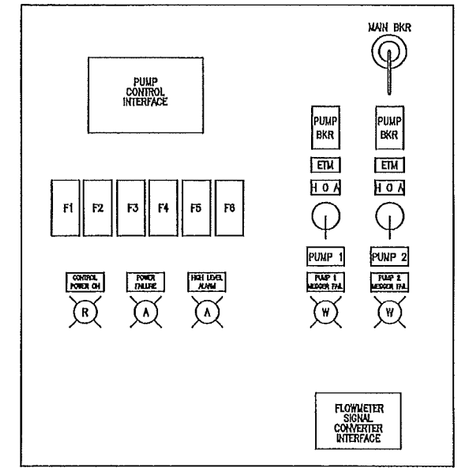

INNER SUB PANEL LAYOUT
NO SCALE

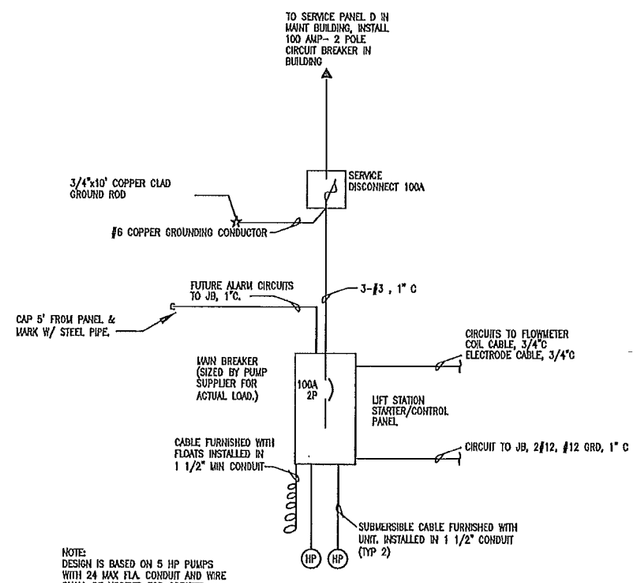

NOTE:
DESIGN IS BASED ON 5 HP PUMPS WITH 24 MAX FLA. CONDUIT AND WIRE SHALL BE UPSIZED FOR GREATER.

*FLOWMETER COIL ELECTRODE CABLES SHALL BE AS RECOMMENDED BY FLOWMETER MANUFACTURER.

DUPLEX ONE-LINE
NO SCALE

NO.	DATE	REVISIONS	BY	APP'D
5				
4				
3				
2				
1				

Designed By:
Drawn By:
Checked By:
Issue Date:

COPYRIGHT © 2009-SHAFER, KLINE & WARREN INC.
MISSOURI CERTIFICATE OF AUTHORITY: F001139850

SHAFER, KLINE & WARREN, INC.
1400 Forum Boulevard, Suite 19A, Columbia, MO 65203–1997
573/442–4537 FAX: 573/442–4543
OFFICE LOCATIONS: Chillicothe, MO Columbia, MO Houston, TX Iola, KS Kansas City, MO Lenexa, KS Macon, MO North Kansas City, MO Tulsa, OK
CIVIL ENGINEERS ELECTRICAL ENGINEERS MECHANICAL ENGINEERS STRUCTURAL ENGINEERS LANDSCAPE ARCHITECTS LAND SURVEYORS LAND PLANNERS

TRENTON MoDOT MAINT FACILITY
TRENTON, MISSOURI

ELECTRICAL DETAILS

800160–030

SHEET NO. 8 OF 11

S:\PROJ\800160\DWG\DWG COLUMBIA\800160–030–DETAILS.DWG
LAYOUT: SHT8 | BY: PERRIGO | DATE: 10/30/2009
XREF DWG1: NONE | XREF DWG2: NONE
XREF DWG3: NONE | XREF DWG4: NONE

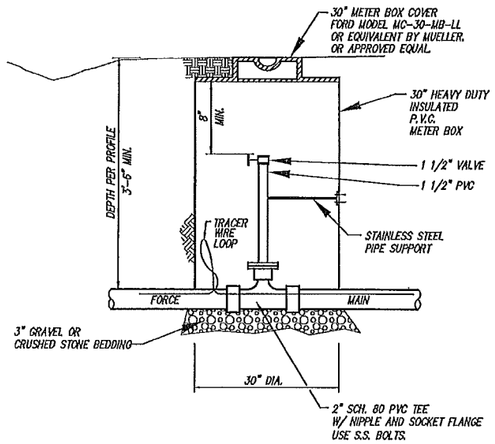

MANUAL AIR RELEASE VALVE & VAULT

NO SCALE

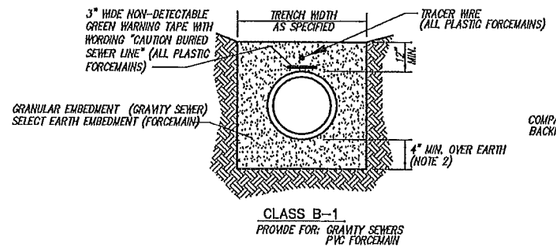

CLASS B-1

PROVIDE FOR: GRAVITY SEWERS
PVC FORCEMAIN

NOTES:

1. REFER TO THE EARTHWORK AND TRENCHING SPECIFICATIONS FOR TRENCH WIDTH & COMPACTION REQUIREMENTS.
2. DIMENSION OVER ROCK SHALL BE 8/4, 6" MIN.

PIPE EMBEDMENT DETAILS

NO SCALE

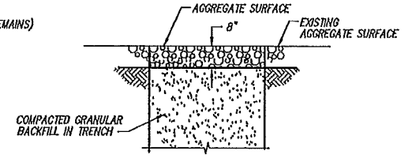

AGGREGATE SURFACED AREA

NO SCALE

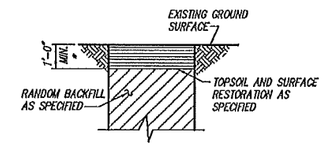

* 2'-0" MINIMUM IN ESTABLISHED GARDENS

GRASSED AREA TRENCH BACKFILL DETAIL

NO SCALE

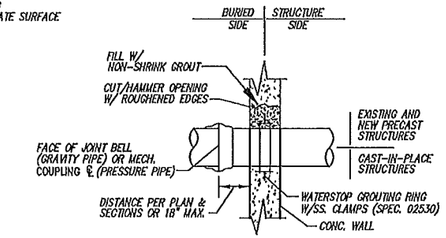

NOTE: THIS DETAIL APPLIES TO ALL PIPES GROUTED INTO NEW AND EXISTING STRUCTURES.

GROUT RING

NO SCALE

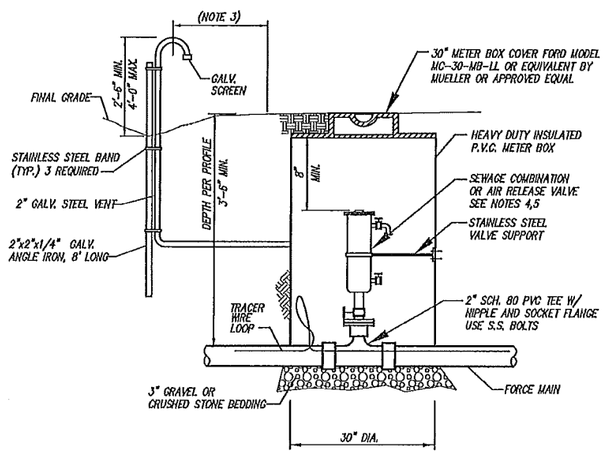

NOTES:

1. SEWAGE COMBINATION AIR RELEASE AND AIR/ VACUUM VALVES SHALL BE VALMATIC "VM-801 BW", GA INDUSTRIES "FIGURE 942" OR ENGINEER APPROVED EQUAL. INLET SHALL BE 2" NPT. UNLESS OTHERWISE NOTED ON THE PLANS OR PROFILES, OUTLET SIZE SHALL BE 1" NPT AND AIR RELEASE ORIFICE SHALL BE 5/16". VALVES SHALL BE PROVIDED WITH FLUSHING ATTACHMENT, INCLUDING BRONZE SHUT-OFF AND FLUSHING BALL VALVES, QUICK CONNECTION COUPLING, AND 5' OF RUBBER HOSE, FOR BACK WASHING WITH CLEAR WATER. THE UNIT SHALL BE COATED WITH AWWA C550 FUSION BONDED EPOXY OR 2-PART EPOXY.
2. SEWAGE AIR RELEASE VALVES SHALL BE VALMATIC "VM-489W", GA INDUSTRIES "FIGURE 925", OR ENGINEER APPROVED EQUAL. INLET SHALL BE 2" NPT. UNLESS OTHERWISE NOTED ON THE PLANS OR PROFILES, OUTLET SIZE SHALL BE 1/2" NPT AND AIR RELEASE ORIFICE SHALL BE 3/16".
3. LOCATE GOOSENECK AT RIGHT OF WAY.
4. IF HEIGHT OF VAULT CAUSES FRAME AND COVER TO BE ABOVE GRADE, PERFORM GRADING TO PROVIDE A SMOOTH TRANSITION. DO NOT LOCATE VAULT TO OBSTRUCT DITCH. IF NECESSARY, OFFSET ALIGNMENT AT VAULT TO AVOID PLACING STRUCTURE IN DITCH FLOWLINE. ROTATE TOP RING AND COVER TO AVOID DITCH FLOW LINE.
5. ALL VALVE VAULTS SHALL HAVE A MARKER POST LOCATED AT THE RIGHT OF WAY. MARKER POSTS SHALL BE USA BLUE BOOK FORCEMAIN, "STOCK NO. 70474".

*RHINO 3-RAIL STOCK NO. 70457" WITH DECAL INDICATING SEWER

COMBINATION OR AIR RELEASE VALVE & VAULT

NO SCALE

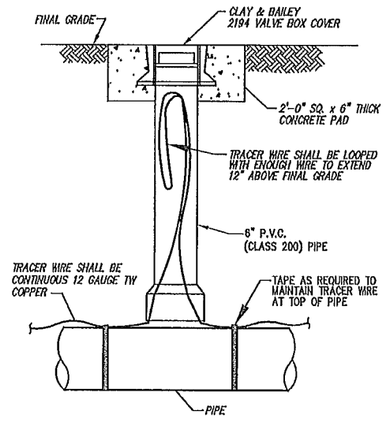

TRACER WIRE TEST STATION

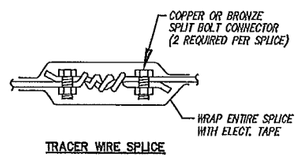

TRACER WIRE SPLICE

NOTES:

1. INSTALL TEST STATIONS AT LOCATIONS ALONG SEWER FORCEMAIN AT INTERVALS NOT TO EXCEED 600 FEET. AIR VALVE VAULTS SHALL BE USED AS TEST STATIONS.
2. AT TRACER WIRE TEST STATION THE TRACER WIRE SHALL BE LOOPED WITH ENOUGH WIRE TO EXTEND 12" ABOVE GRADE. THE LOOP SHALL BE PLACED IN AN ORGANIZED FASHION WITHIN THE TEST STATION WHICH DOES NOT INTERFERE WITH ENTRY OR MAINTENANCE.
3. ALL TEST STATIONS SHALL HAVE A MARKER POST LOCATED AT THE RIGHT OF WAY. MARKER POSTS SHALL BE USA BLUE BOOK RHINO 3-RAIL STOCK NO. 70457 WITH DECAL INDICATING SEWER FORCEMAIN STOCK NO. 70474.

TRACER WIRE DETAILS

NO SCALE

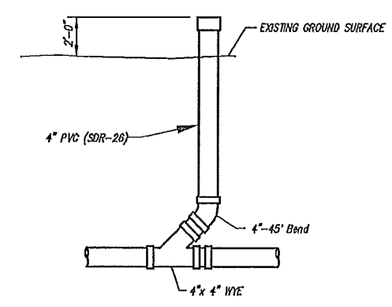

TYPICAL CLEAN OUT DETAIL

(GRAVITY SEWER)

NO SCALE

STATE OF MISSOURI
MICHAEL MELVIN HALL
NUMBER E-30044
REGISTERED PROFESSIONAL ENGINEER

12-8-09

NO.	DATE	REVISIONS	BY	APP'D
1				
2				
3				
4				
5				

Designed By:
Drawn By:
Checked By:
Issue Date:

COPYRIGHT © 2009-SHAFER, KLINE & WARREN INC.

MISSOURI CERTIFICATE OF AUTHORITY: E2013930

SHAFER, KLINE & WARREN, INC.
1400 Forum Boulevard, Suite 19A, Columbia, MO 65203-1997
573/442-4537 FAX: 573/442-4543
OFFICE LOCATIONS: Chillicothe, MO Columbia, MO Houston, TX Iola, KS Kansas City, MO Lenexa, KS Macon, MO North Kansas City, MO Tulsa, OK
CIVIL ENGINEERS ELECTRICAL ENGINEERS MECHANICAL ENGINEERS STRUCTURAL ENGINEERS LANDSCAPE ARCHITECTS LAND SURVEYORS LAND PLANNERS

TRENTON McDOT MAINT FACILITY
TRENTON, MISSOURI

MISC DETAILS

800160-030

SHEET NO. 9 OF 11

S:\PROJ\800160\DWG\DWG COLUMBIA\800160-030-DETAILS.DWG
LAYOUT: SHT 9 | BY: PERRIGO | DATE: 10/30/2009
XREF DWG1: NONE | XREF DWG2: NONE
XREF DWG3: NONE | XREF DWG4: NONE

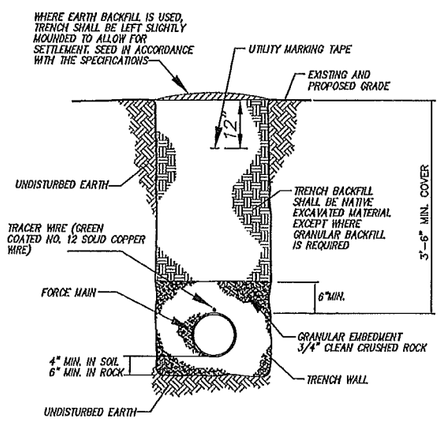

LOW PRESSURE SEWER MAINS

NOTES:

1. UNDERGROUND MARKING TAPE MARKED "CAUTION SEWER LINE BURIED BELOW" BY TERRA TAPE OR APPROVED EQUAL, LOCATED 12" BELOW FINISH GRADE.

2. TRACER WIRE FOR SEWER PIPELINE AND DISCHARGE PIPING, HIGH MOLECULAR WEIGHT – POLYETHYLENE TRACER WIRE, 1–#14 AWG, BY PAIGE ELECTRIC OR APPROVED EQUAL. SPLICING SHALL BE WITH 3M DBY/DBR DIRECT BURY SPLICE KITS. TRACER WIRE LEAD CONNECTIONS TO BE LOCATED IN "IN-LINE FLUSHING ASSEMBLIES".

PIPE INSTALLATION DETAILS

NO SCALE

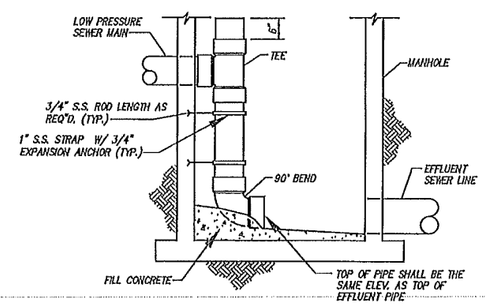

LOW PRESSURE SEWER MAIN CONNECTION AT MANHOLE

NO SCALE

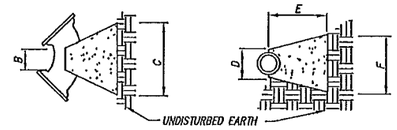

BENDS	B	C	D	E	F
2"–3" 11 1/4 DEG	8"	15"	10"	24"	12"
2"–3" 22 1/2 DEG	8"	19"	10"	24"	13"
4" 11 1/4 DEG	8"	15"	12"	24"	13"
4" 22 1/2 DEG	8"	19"	12"	24"	13"
6" 11 1/4 DEG	8"	15"	12"	24"	12"
6" 22 1/2 DEG	8"	19"	12"	24"	13"

BENDS	B	C	D	E	F
2"–3" 45 DEG.	8"	30"	10"	24"	14"
2"–3" 90 DEG.	8"	30"	10"	24"	27"
4" 90 DEG.	8"	30"	12"	24"	27"
4" 90 DEG.	8"	30"	12"	24"	27"
6" 45 DEG.	8"	30"	12"	24"	14"
6" 90 DEG.	8"	30"	12"	24"	27"

THRUST BLOCKS SHALL BE POURED CONCRETE

TYPICAL CONCRETE THRUST BLOCKS

NO SCALE

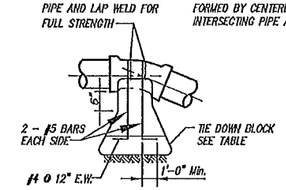

NOTE: VERTICAL FACE OF BEARING ON EARTH TO BE SYMMETRICAL ABOUT PLANE FORMED BY CENTERLINES OF INTERSECTING PIPE ALIGNMENTS.

REQUIRED CU. FT. CONCRETE FOR TIE DOWN BLOCKS

BEND	PIPE SIZE 4"	PIPE SIZE 2"
90°	18	18
45°	11	11
22 1/2°	9	9
11 1/4°	5	5

NOTE: CONSTRUCT BACKING BLOCK AT ALL FITTINGS AND HYDRANTS

CONCRETE TIE DOWN BLOCK

NO SCALE

STATE OF MISSOURI
MICHAEL MELVIN HALL
NUMBER E-30044
REGISTERED PROFESSIONAL ENGINEER
12-8-09

NO.	DATE	REVISIONS	BY	APP'D
5				
4				
3				
2				
1				

Designed By:
Drawn By:
Checked By:
Issue Date:

COPYRIGHT © 2009-SHAFER, KLINE & WARREN INC.
MISSOURI CERTIFICATE OF AUTHORITY: F001398SD

SHAFER, KLINE & WARREN, INC.
1400 Forum Boulevard, Suite 19A, Columbia, MO 65203–1997
573/442–4537 FAX: 573/442–4543
OFFICE LOCATIONS: Chillicothe, MO Columbia, MO Houston, TX Iola, KS Kansas City, MO Lenexa, KS Macon, MO North Kansas City, MO Tulsa, OK
CIVIL ENGINEERS ELECTRICAL ENGINEERS MECHANICAL ENGINEERS STRUCTURAL ENGINEERS LANDSCAPE ARCHITECTS LAND SURVEYORS LAND PLANNERS

TRENTON MoDOT MAINT FACILITY
TRENTON, MISSOURI

MISC DETAILS

800160–030

SHEET NO. 10 OF 11

S:\PROJ\800160\DWG\DWG COLUMBIA\800160-030-DETAILS.DWG
LAYOUT: SHT 10 | BY: PERRIGO | DATE: 10/30/2009
XREF DWG1: NONE | XREF DWG2: NONE
XREF DWG3: NONE | XREF DWG4: NONE

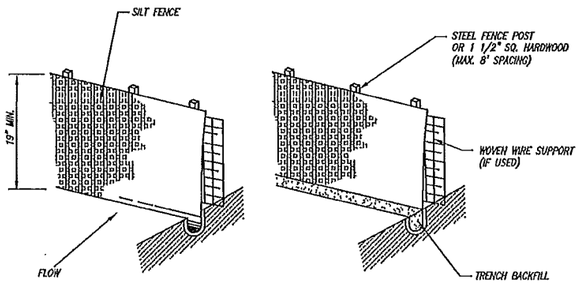

CONSTRUCTION SPECIFICATIONS:

1. POSTS WHICH SUPPORT THE SILT FENCE SHALL BE INSTALLED ON A SLIGHT ANGLE TOWARD THE ANTICIPATED RUNOFF SOURCE AND SPACED AT A MAX. 8' APART OR TO SILT FENCE MANUFACTURER SPECIFICATIONS, WHICHEVER IS STRIGTER.
2. SILT FENCE SHALL BE TRENCHED IN WITH A SPADE OR MECHANICAL TRENCHER SO THAT THE DOWNSLOPE FACE OF THE TRENCH IS FLAT AND PERPENDICULAR TO THE LINE OF FLOW.
3. THE TRENCH SHOULD BE A MINIMUM OF 6" DEEP 3-4" WIDE TO ALLOW FOR THE SILT FENCE TO BE LAID IN THE GROUND AND BACKFILLED.
4. SILT FENCE SHOULD BE SECURELY FASTENED TO EACH SUPPORT POST OR TO WOVEN WIRE WHICH IS IN TURN ATTACHED TO THE FENCE POSTS.
5. INSPECTION SHALL BE FREQUENT AND REPAIR OR REPLACEMENT SHALL BE MADE PROMPTLY AS NEEDED.
6. SILT FENCE SHALL BE REMOVED WHEN IT HAS SERVED ITS USEFULNESS SO AS NOT TO BLOCK OR IMPEDE STORM FLOW OR DRAINAGE.
7. SEDIMENT TRAPPED BY THIS PRACTICE SHALL BE UNIFORMLY DISTRIBUTED ON THE SOURCE AREA PRIOR TO TOPSOILING.
8. SILT FENCE SHALL BE MIRAFI-100X FILTER FABRIC OR APPROVED EQUAL.

SILT FENCE DETAIL
NO SCALE

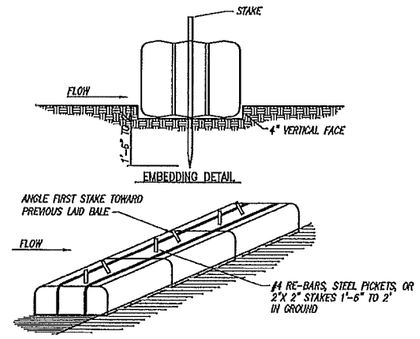

ANCHORING DETAIL

NOTES:

1. BALES SHALL BE PLACED IN A ROW WITH ENDS TIGHTLY ABUTTING THE ADJACENT BALES.
2. EACH BALE SHALL BE EMBEDDED IN THE SOIL A MINIMUM OF 4".
3. BALES SHALL BE SECURELY ANCHORED IN PLACE BY STAKES OR RE-BARS DRIVEN THROUGH THE BALES. THE FIRST STAKE IN EACH BALE SHALL BE ANGLED TOWARD PREVIOUSLY LAID BALE TO FORCE BALES TOGETHER.
4. INSPECTION SHALL BE FREQUENT AND REPAIR OR REPLACEMENT SHALL BE MADE PROMPTLY AS NEEDED.
5. BALES SHALL BE REMOVED WHEN THEY HAVE SERVED THEIR USEFULNESS SO AS NOT TO BLOCK OR IMPEDE STORM FLOW OR DRAINAGE BY THE OWNER.

STRAW BALE DIKE DETAIL
NO SCALE

NOTES:

1. THE EROSION CONTROL FEATURES AND NOTES SHOWN ON THIS SHEET REPRESENT THE MINIMUM REQUIREMENTS ACCEPTABLE. LOCATIONS ARE TYPICAL AND MAY VARY ACCORDING TO CONTRACTOR'S STAGING AND LIMITS OF CONSTRUCTION.
2. IT SHALL BE EACH CONTRACTOR'S RESPONSIBILITY TO CONTROL EROSION AND PREVENT POLLUTION FOR ALL WORK WHICH THEY ARE DIRECTLY INVOLVED.
3. IT SHALL BE EACH CONTRACTORS RESPONSIBILITY TO PLACE ADDITIONAL CONTROL DEVICES AS REQUIRED DURING CONSTRUCTION TO PREVENT SOIL LOSS FROM THE SITE. IT SHALL ALSO BE EACH CONTRACTOR'S RESPONSIBILITY TO MAINTAIN THEIR EROSION CONTROL FEATURES IN PROPER WORKING CONDITION UNTIL THE SITE IS STABILIZED BY PAVEMENT, VEGETATION OR OTHER MEANS.
4. WHEN POSSIBLE, WITHOUT ADVERSELY AFFECTING CONSTRUCTION OPERATIONS, THE CONTRACTOR SHALL: MINIMIZE THE AMOUNT OF SURFACE AREA WHICH IS EXPOSED AT ONE TIME, LEAVE GRADED AREAS WITH A ROUGH TEXTURE, CONSTRUCT TEMPORARY TERRACES DURING GRADING OPERATIONS, AND LIMIT UNNECESSARY VEHICLE TRAFFIC IN GRADED AREAS.
5. THE SPILLAGE OF DEBRIS, INCLUDING THE TRACKING OF SOIL, OUTSIDE OF THE CONSTRUCTION LIMITS SHALL BE AVOIDED.
6. STRAW BALE DIKES OR SILT FENCES SHALL BE PLACED ON A CONTOUR ELEVATION ALONG THE DOWNHILL SIDE AND FOR THE FULL EXTENT OF THE DISTURBED AREAS WITHIN THE CONSTRUCTION LIMITS. THE LAST FIVE FEET ON EACH END OF RUN OF SILT FENCE/STRAW BALE DIKE SHALL BE PLACED FACING UPHILL AT 90 DEGREES TO THE CONTOUR LINE.
7. THE CONTRACTOR SHALL PREVENT SILT AND SEDIMENT FROM ENTERING THE STORM SEWER SYSTEM. STRAW BALE DIKES SHALL BE PLACED AROUND ALL STORM SEWER INLETS EXCEPT DURING CONSTRUCTION OPERATIONS WHICH REQUIRE THEIR REMOVAL.
8. CONTRACTOR SHALL INSPECT THEIR EROSION CONTROL DEVICES AFTER ALL RAINFALL EVENTS TO INSURE THEY ARE WORKING PROPERLY. THE CONTRACTOR SHALL ALSO INSPECT THE SITE AFTER ALL RAINFALL EVENTS AND ON A PERIODIC BASIS TO ASSESS THE NEED AND IF PRUDENT, INSTALL ADDITIONAL EROSION CONTROL DEVICES AS REQUIRED.
9. ALL AREAS UPON REACHING FINAL GRADE SHALL BE BROUGHT TO FINAL PLAN CONDITION (PAVED, MULCHED AND SEEDED, SODDED, OR OTHER) AS SOON AS POSSIBLE.

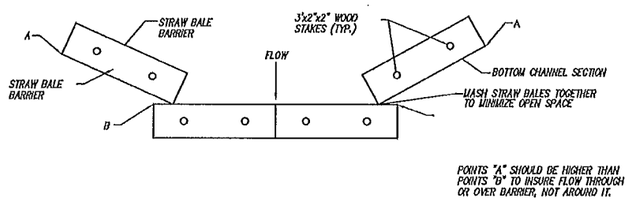

POINTS "A" SHOULD BE HIGHER THAN POINTS "B" TO INSURE FLOW THROUGH OR OVER BARRIER, NOT AROUND IT.

TOP VIEW DITCH APPLICATION DETAILS

DITCH CHECK SPACING

DITCH ℄ SLOPE %	SPACING (FT)	DITCH ℄ SLOPE %	SPACING (FT)
.05	400	5.5	38
1.0	200	6.0	35
1.5	133	6.5	30
2.0	100	7.0	28
2.5	80	7.5	26
3.0	66	8.0	25
3.5	57	8.5	23
4.0	50	9.0	22
4.5	44	9.5	21
5.0	40	10.0	20

TEMPORARY STRAW BALE DITCH CHECK
NO SCALE

STATE OF MISSOURI
MICHAEL MELVIN HALL
NUMBER E-30044
REGISTERED PROFESSIONAL ENGINEER
12-8-09

NO.	DATE	REVISIONS	BY	APP'D
5				
4				
3				
2				
1				

Designed By:
Drawn By:
Checked By:
Issue Date:

COPYRIGHT © 2009-SHAFER, KLINE & WARREN INC.
MISSOURI CERTIFICATE OF AUTHORITY: F-1013950

SHAFER, KLINE & WARREN, INC.
1400 Forum Boulevard, Suite 19A, Columbia, MO 65203-1997
573/442-4537 FAX: 573/442-4543
OFFICE LOCATIONS: Chillicothe, MO Columbia, MO Houston, TX Iola, KS Kansas City, MO Lenexa, KS Macon, MO North Kansas City, MO Tulsa, OK
CIVIL ENGINEERS ELECTRICAL ENGINEERS MECHANICAL ENGINEERS STRUCTURAL ENGINEERS LANDSCAPE ARCHITECTS LAND SURVEYORS LAND PLANNERS

TRENTON MoDOT MAINT FACILITY
TRENTON, MISSOURI

EROSION CONTROL DETAILS

800160-030

SHEET NO. 11 OF 11

S:\PROJ\800160\DWG\DWG COLUMBIA\800160-030-DETAILS.DWG
LAYOUT: SHT11 BY: PERRIGO DATE: 10/30/2009
XREF DWG1: NONE XREF DWG2: NONE
XREF DWG3: NONE XREF DWG4: NONE