BEFORE YOU
DIG – DRILL – BLAST
Call 1-800-344-7483
(TOLL FREE)
MISSOURI ONE CALL SYSTEM, INC.

MARSHALL MoDOT MAINTENANCE FACILITY SEWER EXTENSION

MARSHALL, SALINE COUNTY, MISSOURI

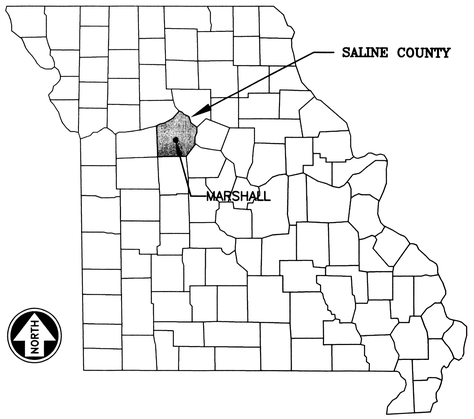

KEY MAP
SHOWING LOCATION OF COUNTY

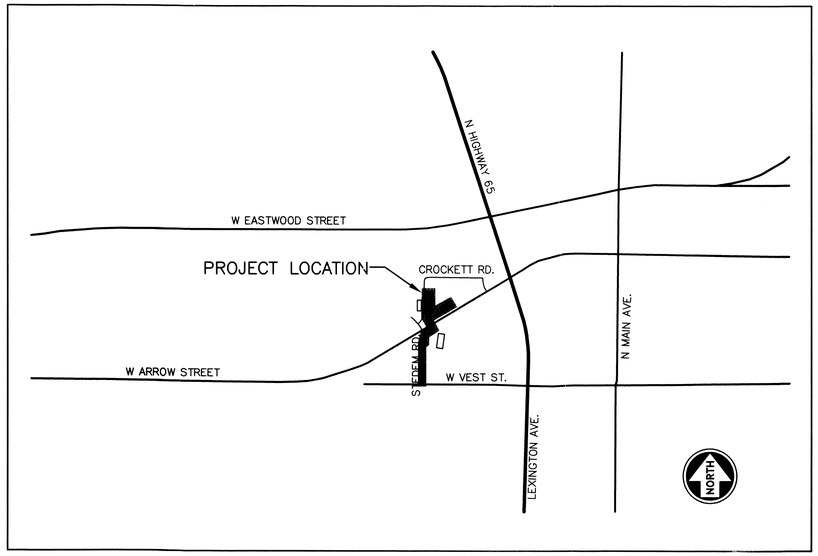

NE 1/4, SECTION 16, TOWNSHIP 15 _, RANGE 21 _

PROJECT LOCATION MAP
NOT TO SCALE

INDEX OF SHEETS

1	COVER SHEET
2	SANITARY SEWER SITE PLAN
3	PLAN & PROFILE
4	SANITARY SEWER SERVICE LINE PLAN
5	EROSION CONTROL PLAN & DETAILS
6	DETAILS

NOTES TO CONTRACTOR:

1) UNDERGROUND UTILITIES HAVE BEEN SHOWN FROM APPROXIMATE LOCATIONS PROVIDED BY UTILITY COMPANIES, THEREFORE THEIR LOCATIONS MUST BE CONSIDERED APPROXIMATE ONLY. VERIFICATION OF THE LOCATIONS OF UNDERGROUND UTILITIES, SHOWN OR NOT SHOWN, WILL BE THE RESPONSIBILITY OF THE CONSTRUCTION CONTRACTOR.

2) CONTRACTOR SHALL MAKE EVERY EFFORT TO ASSURE MINIMUM CLEARANCE BETWEEN SEWER LINES AND WATER LINES (10' HORIZONTAL, 18" VERTICAL AT CROSSINGS).

3) ALL ROADS, DRIVEWAYS, CULVERTS, SIDEWALKS, FENCES, AND LANDSCAPING DAMAGED DURING CONSTRUCTION SHALL BE REPAIRED OR REPLACED.

4) ALL CONSTRUCTION SHALL BE IN ACCORDANCE WITH THE CITY OF MARSHALL STANDARD SPECIFICATIONS FOR GRAVITY SANITARY SEWER CONSTRUCTION

5) ALL EXCAVATION WITH THE STREET RIGHT-OF-WAY SHALL BE BACKFILLED WITH GRANULAR MATERIAL OR COMPACTED EARTH FILL.

6) ALL SEWER GREATER THAN 15 FEET IN DEPTH SHALL BE A MINIMUM OF SDR 26. ALL MANHOLES GREATER THAN 16 FEET IN DEPTH SHALL HAVE A DOUBLE STEEL REINFORCEMENT PER CITY OF COLUMBIA SPECIFICATIONS.

7) ALL EROSION CONTROL DEVICES SHALL BE INSTALLED IN CONFORMITY WITH THE CITY OF MARSHALL STANDARDS.

8) IT IS THE INTENT OF THESE PLANS TO COMPLY WITH THE REQUIREMENTS OF THE MISSOURI CLEAN WATER COMMISSION.

9) SILT FENCE SHALL BE PLACED AS INDICATED ON THE PLANS

ESTIMATED QUANTITIES

ITEM #	DESCRIPTION	UNITS	QUANTITY
1	8" PVC SDR 35 PIPE	LF	917
2	48" DIAMETER MANHOLE	EA	6
3	48" MANHOLE EXTRA DEPTH	VF	11.96
4	CONNECTION TO EXISTING MANHOLE	LS	1
5	BORING AND JACKING 8" PVC SEWER IN 18" CASING	LF	60
6	4" PVC SDR 35 PIPE	LF	~~550~~ 711
7	CONNECTION TO BUILDING SANITARY SEWER SERVICE	EA	~~3~~ 1
8	~~CONNECTION TO OIL INTERCEPTOR~~	~~EA~~	~~2~~
9	FENCE REMOVAL AND REPLACEMENT	LS	1
10	SEPTIC TANK REMOVAL	LS	1
11	ASPHALT REMOVAL AND REPLACEMENT	LF	547
12	SEEDING AND SODDING	LS	1
13	CONSTRUCTION STAKING	LS	1
14	SILT FENCE	LS	1
15	STRAW BALE DIKE	EA	2
16	STRAW BALE DITCH CHECK	EA	12
17	MOBILIZATION	LS	1
18	FULL DEPTH GRANULAR BEDDING	LF	~~555~~ 710
19	CLEANOUTS	EA	~~3~~ 11
20	4"x4"x4" TEES	EA	~~3~~ 10
21	4"x4"x4" WYES	EA	~~4~~ 11
22	4" – 45° BENDS	EA	~~3~~ 3

UTILITIES

SEWER – MARSHALL MUNICIPAL UTILITIES
75 E. MORGAN
MARSHALL, MO 65340
(660) 886-6966
www.mmumo.net

ELECTRIC – MARSHALL MUNICIPAL UTILITIES
75 E. MORGAN
MARSHALL, MO 65340
(660) 886-6966
www.mmumo.net

WATER – MARSHALL MUNICIPAL UTILITIES
75 E. MORGAN
MARSHALL, MO 65340
(660) 886-6966
www.mmumo.net

GAS – EMPIRE DISTRICT GAS CO.
(800) 424-0427
(660) 886-6545
www.empiredistrict.com

PANHANDLE EASTERN PIPELINE CO.
(800) 225-3913 (EMERGENCY)M
(800) 275-7375

PHONE – A T & T DISTRIBUTION

CATV – TIME WARNER CABLE
(WINDJAMMER CABLE)
117 E. ARROW ST.
MARSHALL, MO 65340
(660) 886-9619

APPROVALS:

Monty Chesne — 8-17-09
~~City Engineer~~ Director of Underground Facilities, Marshall Municipal Utilities — Date

BENCHMARK

BENCHMARK
NORTH RIM OF MANHOLE LOCATED THE INTERSECTION OF WEST VEST STREET AND STEDEM ROAD
ELEVATION = 765.27

TEMPORARY BENCHMARK
SET 600 IN WEST SIDE OF POWER POLE AT THE NORTHWEST CORNER OF THE INTERSECTION OF WEST VEST AND STEDEM.
ELEVATION = 766.92

TEMPORARY BENCHMARK
CHISELED X IN NORTH BONNET BOLT OF FIRE HYDRANT AT SOUTHWEST CORNER OF THE INTERSECTION OF STEDEM AND HWY. 20
ELEVATION = 768.38

NO.	DATE	REVISIONS	BY	APP'D
1	8-19-09	REVISIONS PER CITY COMMENTS	ELM	MMH
2	9-21-09	REVISED SERVICE LINES 1,2 & 3	Ray	MMH
3				
4				
5				

COPYRIGHT © 2009 SHAFER, KLINE & WARREN INC.
MISSOURI CERTIFICATE OF AUTHORITY: F00139850

Designed By: RW
Drawn By: ELM
Checked By: MMH
Issue Date: 7-17-09

MICHAEL MELVIN HALL
STATE OF MISSOURI
MICHAEL MELVIN HALL
NUMBER E-27027
REGISTERED PROFESSIONAL ENGINEER

SHAFER, KLINE & WARREN, INC.
1400 Forum Boulevard, Suite 19A, Columbia, MO 65203-1997
573/442-4537 FAX: 573/442-4543
OFFICE LOCATIONS: Chillicothe, MO; Columbia, MO; Houston, TX
Iola, KS; Kansas City, MO; Lenexa, KS
Macon, MO; North Kansas City, MO; Tulsa, OK
CIVIL ENGINEERS ELECTRICAL ENGINEERS MECHANICAL ENGINEERS STRUCTURAL ENGINEERS LANDSCAPE ARCHITECTS LAND SURVEYORS LAND PLANNERS

MARSHALL MODOT MAINTENANCE FACILITY
MARSHALL, SALINE COUNTY, MISSOURI

SEWER EXTENSION
COVER SHEET

800160-020

SHEET NO. 1 OF 6

P:\800160-020_ACAD\CIVIL\800160-020-COVER.DWG
LAYOUT: COVER | BY: EMCCUE | DATE: 8/4/2009
XREF DWG1: NONE | XREF DWG2: NONE
XREF DWG3: NONE | XREF DWG4: NONE

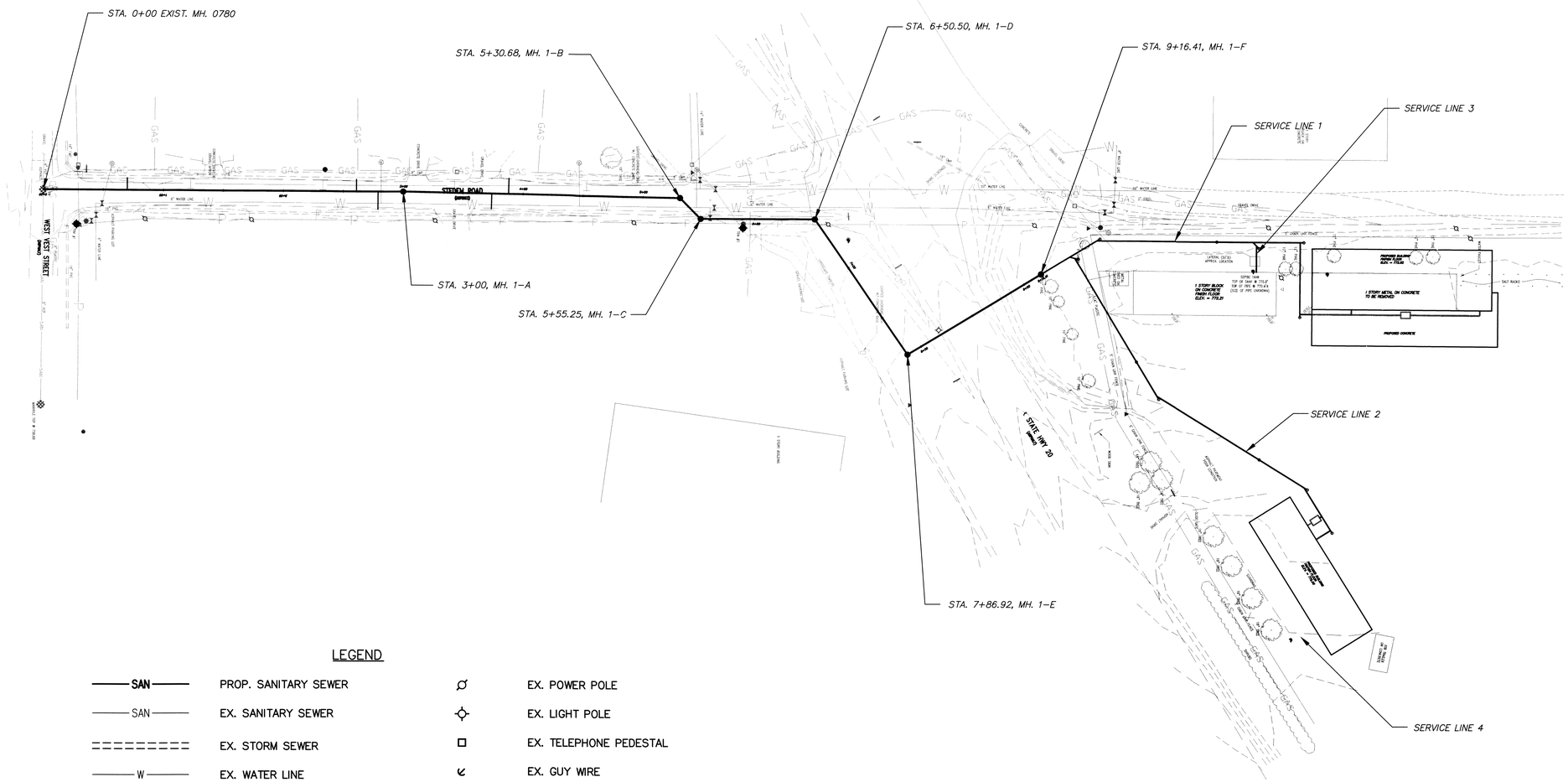

LEGEND

SAN	PROP. SANITARY SEWER		EX. POWER POLE
SAN	EX. SANITARY SEWER		EX. LIGHT POLE
	EX. STORM SEWER		EX. TELEPHONE PEDESTAL
W	EX. WATER LINE		EX. GUY WIRE
GAS	PROP. GAS LINE		BENCHMARK
GAS	EX. GAS LINE		MONUMENT
T	EX. TELEPHONE LINE		FOUND IRON PIN
FO	EX. FIBER OPTIC LINE		SET IRON PIN
P	EX. OVERHEAD POWER LINE		RIGHT–OF–WAY MARKER
UP	EX. UNDERGROUND POWER LINE		PK NAIL
TV	EX. TELEVISION CABLE LINE		EX. WATER METER
X	EX. FENCE		EX. GAS METER
	EX. TREE LINE		EX. ELECTRIC METER
	PROP. MANHOLE		EX. WATER TEE
	EX. MANHOLE		EX. FIRE HYDRANT
	PROP. CLEANOUT		EX. WATER VALVE
	EX. CLEANOUT		EX. WATER LINE REDUCER
	EX. ROAD SIGN		EX. WATERLINE PLUG
	SILT FENCE		
	STRAW BALE DITCH CHECK		

NORTH

100 50 0 100

SCALE : 1" = 50'

NO.	DATE	REVISIONS	BY	APP'D
1	8–19–09	ADDED TEES AND CLEANOUTS	ELM	MMH
2	9–21–09	REVISED SERVICE LINES 1,2,& 3	RAY	MMH
3				
4				
5				

Designed By: RCW
Drawn By: RCW
Checked By: MMH
Issue Date: 7–17–09

MICHAEL MELVIN HALL
STATE OF MISSOURI
MICHAEL MELVIN HALL
NUMBER E-30044
PROFESSIONAL ENGINEER
E-30044

COPYRIGHT © -2009-SHAFER, KLINE & WARREN INC.
MISSOURI CERTIFICATE OF AUTHORITY: F001139850

SHAFER, KLINE & WARREN, INC.
1400 Forum Boulevard, Suite 19A, Columbia, MO 65203–1997
573/442–4537 FAX: 573/442–4543
OFFICE LOCATIONS: Chillicothe, MO Columbia, MO Houston, TX Iola, KS Kansas City, MO Lenexa, KS Macon, MO North Kansas City, MO Tulsa, OK
CIVIL ENGINEERS ELECTRICAL ENGINEERS MECHANICAL ENGINEERS STRUCTURAL ENGINEERS LANDSCAPE ARCHITECTS LAND SURVEYORS LAND PLANNERS

MARSHALL MoDOT MAINTENANCE FACILITY
MARSHALL, MISSOURI

SANITARY SEWER SITE PLAN

800160–020

SHEET NO. 2 OF 6

P:\800160–020_ACAD\CIVIL\800160–020–SSWA–LOUT.DWG
LAYOUT: SITE PLAN | BY: RWILLIAMS | DATE: 9/21/2009
XREF DWG1: NONE | XREF DWG2: NONE
XREF DWG3: NONE | XREF DWG4: NONE

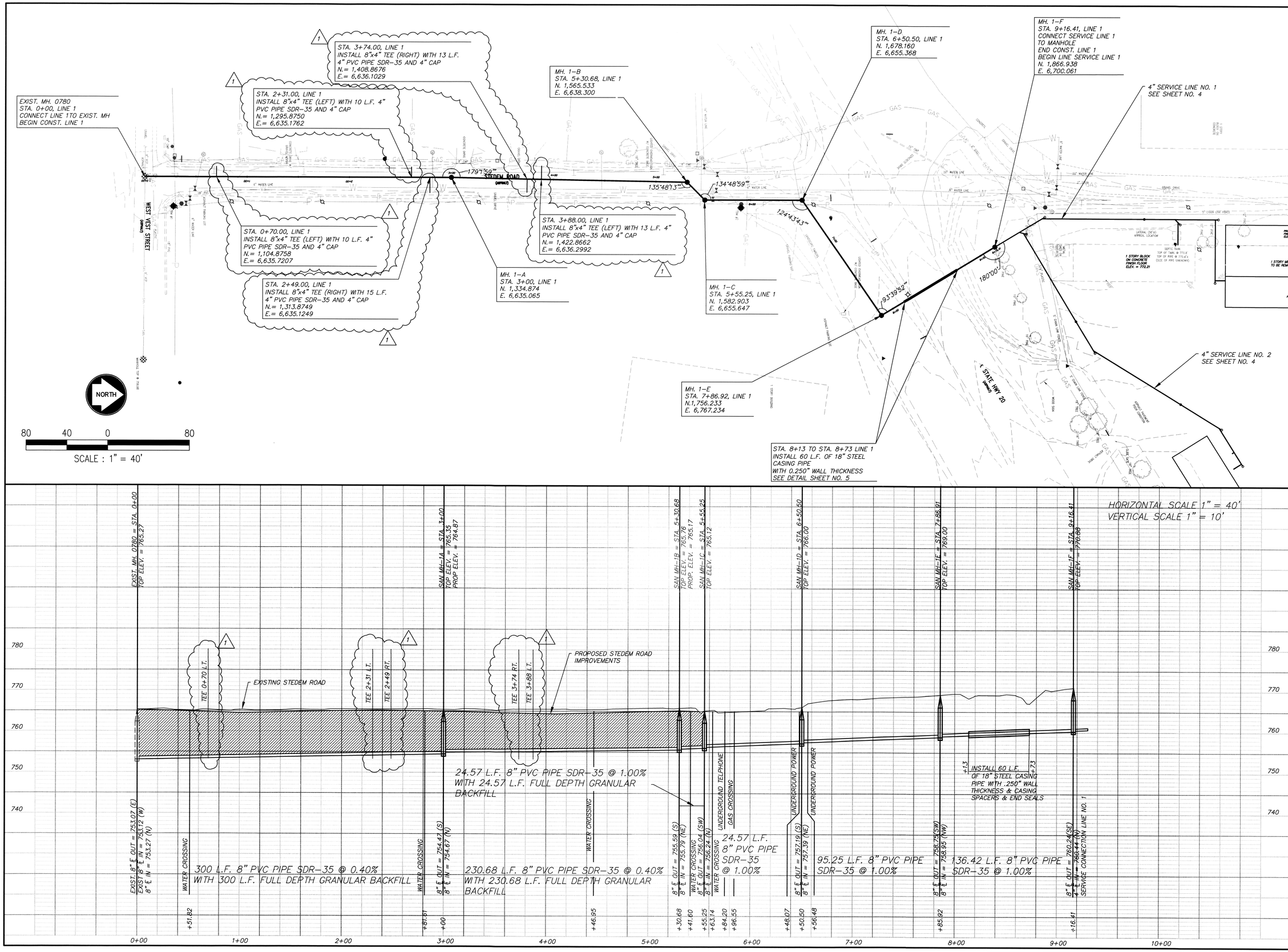

NO.	DATE	REVISIONS	BY	APP'D
1	8-19-09	ADDED TEES	ELM	MMH
2				
3				
4				
5				

Designed By: RCW
Drawn By: RCW
Checked By: MMH
Issue Date: 7-17-09

MICHAEL W. HALL
STATE OF MISSOURI
MICHAEL MELVIN HALL
NUMBER E-25044
REGISTERED PROFESSIONAL ENGINEER
4-10-09

COPYRIGHT © -2009-SHAFER, KLINE & WARREN INC.
MISSOURI CERTIFICATE OF AUTHORITY: F001398950

SHAFER, KLINE & WARREN, INC.
1400 Forum Boulevard, Suite 19A, Columbia, MO 65203-1997
573/442-4537 FAX: 573/442-4543
OFFICE LOCATIONS:
Chillicothe, MO
Columbia, MO
Houston, TX
Iola, KS
Kansas City, MO
Lenexa, KS
Macon, MO
North Kansas City, MO
Tulsa, OK
CIVIL ENGINEERS ELECTRICAL ENGINEERS MECHANICAL ENGINEERS STRUCTURAL ENGINEERS LANDSCAPE ARCHITECTS LAND SURVEYORS LAND PLANNERS

MARSHALL MoDOT MAINTENANCE FACILITY
MARSHALL, MISSOURI

SANITARY SEWER LINE NO. 1
PLAN & PROFILE

800160-020

SHEET NO. 3 OF 6

P:\800160-020_ACAD\CIVIL\800160-020-PLAN & PROFILE.DWG
LAYOUT: LAYOUT1 BY: EMCCUE DATE: 9/21/2009
XREF DWG1: NONE XREF DWG2: NONE
XREF DWG3: NONE XREF DWG4: NONE

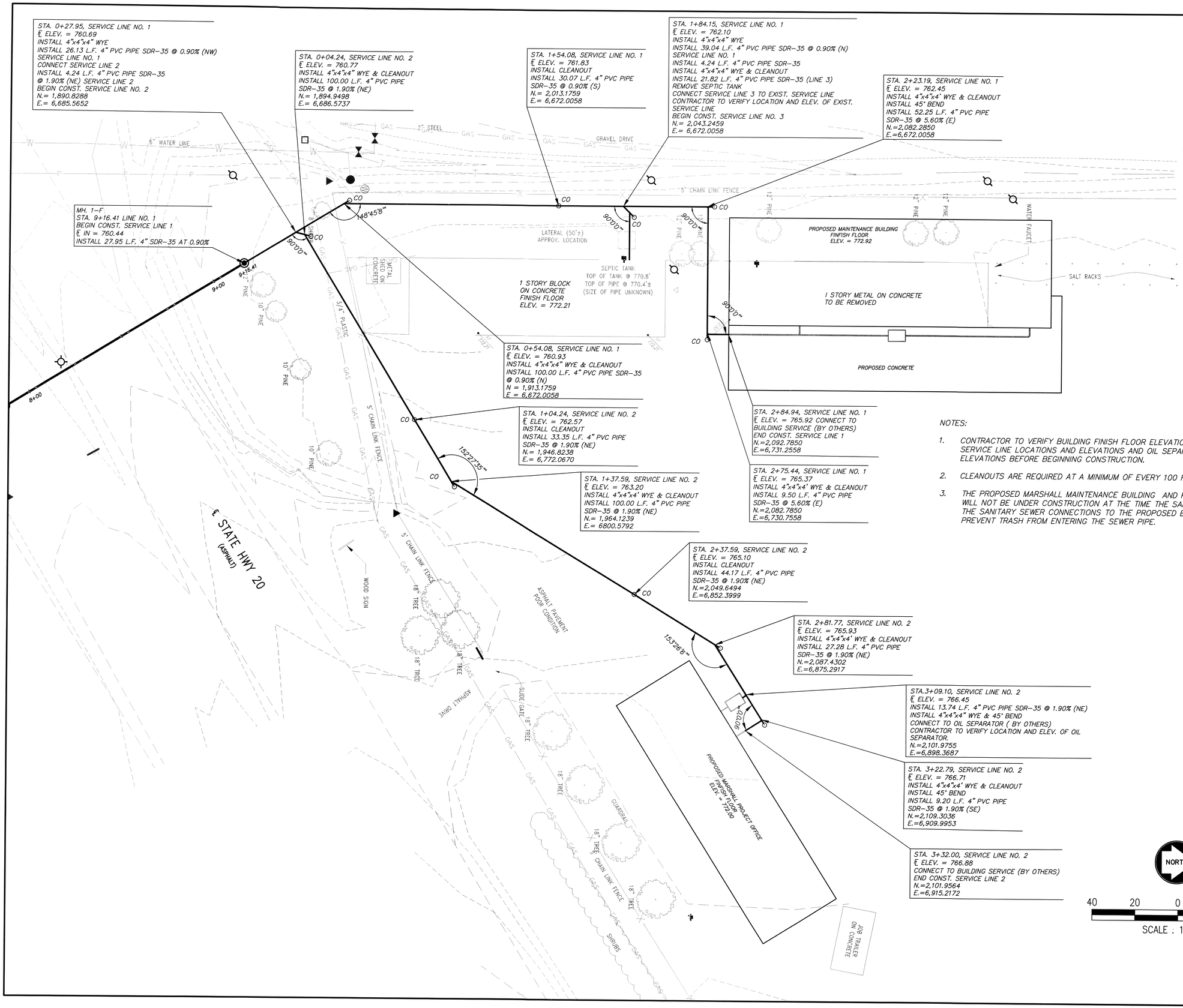

NOTES:

1. CONTRACTOR TO VERIFY BUILDING FINISH FLOOR ELEVATIONS, SERVICE LINE LOCATIONS AND ELEVATIONS AND OIL SEPARATOR LOCATIONS AND ELEVATIONS BEFORE BEGINNING CONSTRUCTION.
2. CLEANOUTS ARE REQUIRED AT A MINIMUM OF EVERY 100 FEET ON SERVICE LINES.
3. THE PROPOSED MARSHALL MAINTENANCE BUILDING AND PROPOSED PROJECT OFFICE WILL NOT BE UNDER CONSTRUCTION AT THE TIME THE SANITARY SEWER IS COMPLETED. THE SANITARY SEWER CONNECTIONS TO THE PROPOSED BUILDINGS SHELL BE CAPPED TO PREVENT TRASH FROM ENTERING THE SEWER PIPE.

NO.	DATE	REVISIONS	BY	APP'D
5				
4				
3				
2	9-21-09	REVISED SERVICE LINES 1,2 & 3	RAY	MMH
1	8-19-09	ADDED CLEANOUTS, REV. STA. AND ELEV.	ELM	MMH

COPYRIGHT ©-2009-SHAFER, KLINE & WARREN INC.

MISSOURI CERTIFICATE OF AUTHORITY: F001398SO

Designed By: RCW
Drawn By: RCW
Checked By: MMH
Issue Date: 7-17-09

MICHAEL MELVIN HALL
STATE OF MISSOURI
MICHAEL MELVIN HALL
NUMBER E-30044
REGISTERED PROFESSIONAL ENGINEER
E-30044 21-S

SHAFER, KLINE & WARREN, INC.
1400 Forum Boulevard, Suite 19A, Columbia, MO 65203-1997
573/442-4537 FAX: 573/442-4543
OFFICE LOCATIONS: Chillicothe, MO Columbia, MO Houston, TX
Iola, KS Kansas City, MO Lenexa, KS
Macon, MO North Kansas City, MO Tulsa, OK
CIVIL ENGINEERS ELECTRICAL ENGINEERS MECHANICAL ENGINEERS STRUCTURAL ENGINEERS LANDSCAPE ARCHITECTS LAND SURVEYORS LAND PLANNERS

MARSHALL MoDOT MAINTENANCE FACILITY
MARSHALL, MISSOURI

SANITARY SEWER SERVICE LINE PLAN
LINE NO. 1, LINE NO. 2, LINE NO.3 & LINE NO. 4

800160-020

SHEET NO. 4 OF 6

P:\800160-020_ACAD\CIVIL\800160-020-SSWR-LOUT.DWG
LAYOUT: SERVICE LAYOUT BY: RWILLIAMS DATE: 9/22/2009
XREF DWG1: NONE XREF DWG2: NONE
XREF DWG3: NONE XREF DWG4: NONE

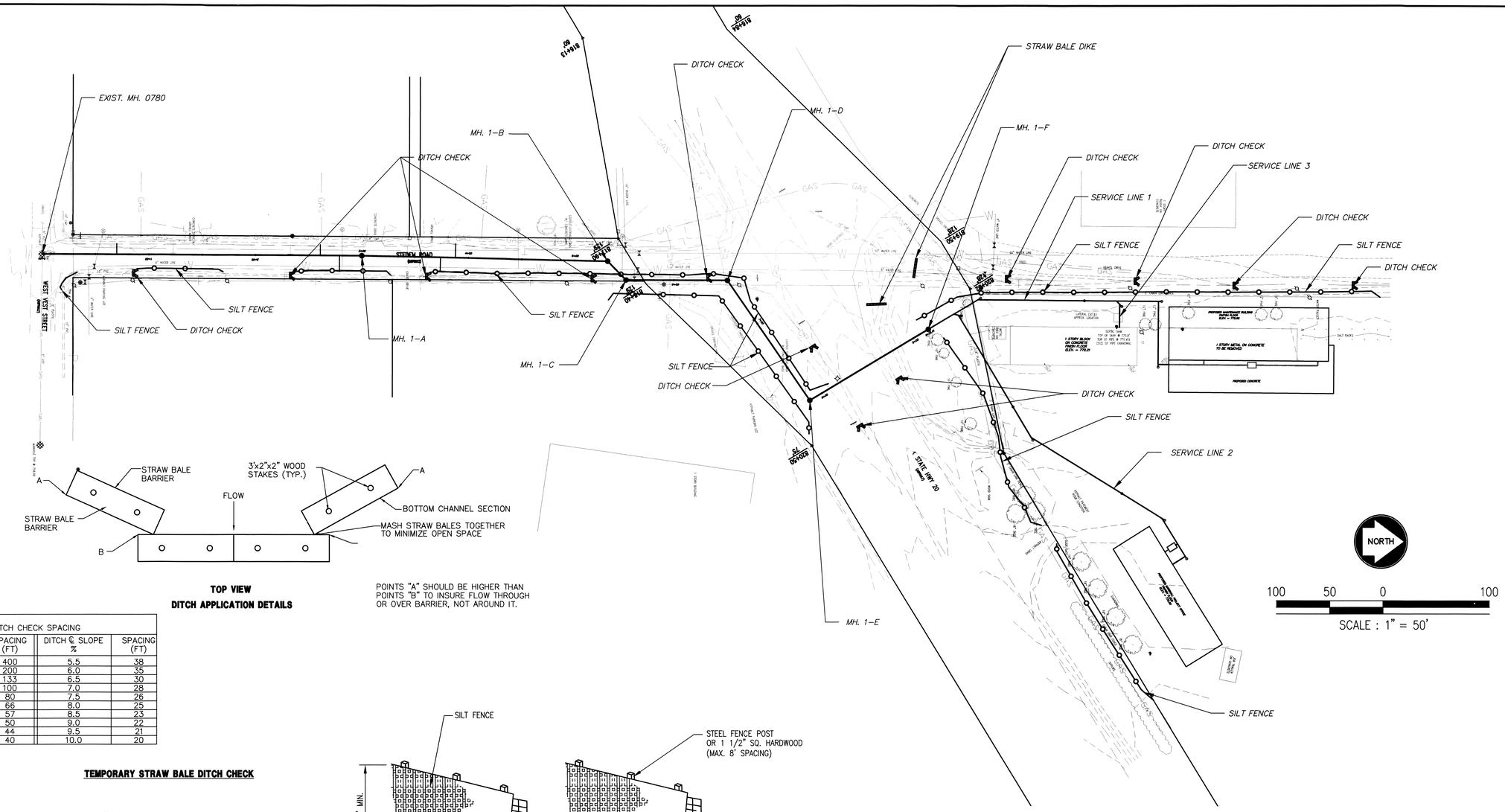

TOP VIEW
DITCH APPLICATION DETAILS

POINTS "A" SHOULD BE HIGHER THAN POINTS "B" TO INSURE FLOW THROUGH OR OVER BARRIER, NOT AROUND IT.

DITCH CHECK SPACING			
DITCH ℄ SLOPE %	SPACING (FT)	DITCH ℄ SLOPE %	SPACING (FT)
.05	400	5.5	38
1.0	200	6.0	35
1.5	133	6.5	30
2.0	100	7.0	28
2.5	80	7.5	26
3.0	66	8.0	25
3.5	57	8.5	23
4.0	50	9.0	22
4.5	44	9.5	21
5.0	40	10.0	20

TEMPORARY STRAW BALE DITCH CHECK

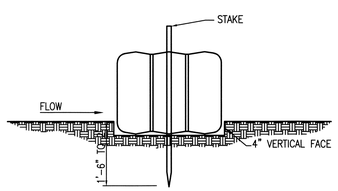

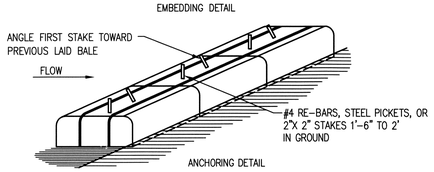

1. BALES SHALL BE PLACED IN A ROW WITH ENDS TIGHTLY ABUTTING THE ADJACENT BALES.
2. EACH BALE SHALL BE EMBEDDED IN THE SOIL A MINIMUM OF 4".
3. BALES SHALL BE SECURELY ANCHORED IN PLACE BY STAKES OR RE-BARS DRIVEN THROUGH THE BALES. THE FIRST STAKE IN EACH BALE SHALL BE ANGLED TOWARD PREVIOUSLY LAID BALE TO FORCE BALES TOGETHER.
4. INSPECTION SHALL BE FREQUENT AND REPAIR OR REPLACEMENT SHALL BE MADE PROMPTLY AS NEEDED.
5. BALES SHALL BE REMOVED WHEN THEY HAVE SERVED THEIR USEFULNESS SO AS NOT TO BLOCK OR IMPEDE STORM FLOW OR DRAINAGE BY THE OWNER.

STRAW BALE DIKE DETAIL

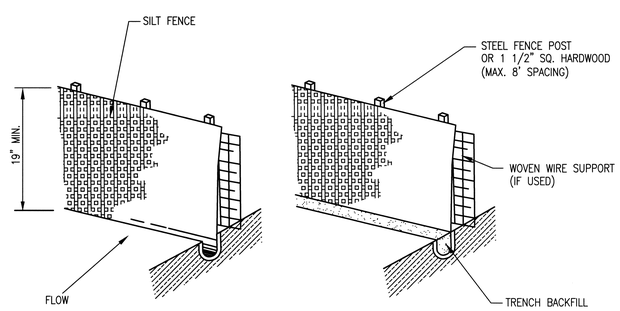

CONSTRUCTION SPECIFICATIONS

1. POSTS WHICH SUPPORT THE SILT FENCE SHALL BE INSTALLED ON A SLIGHT ANGLE TOWARD THE ANTICIPATED RUNOFF SOURCE AND SPACED AT A MAX. 8' APART OR TO SILT FENCE MANUFACTURER SPECIFICATIONS, WHICHEVER IS STRICTER.
2. SILT FENCE SHALL BE TRENCHED IN WITH A SPADE OR MECHANICAL TRENCHER SO THAT THE DOWNSLOPE FACE OF THE TRENCH IS FLAT AND PERPENDICULAR TO THE LINE OF FLOW.
3. THE TRENCH SHOULD BE A MINIMUM OF 6" DEEP 3–4" WIDE TO ALLOW FOR THE SILT FENCE TO BE LAID IN THE GROUND AND BACKFILLED.
4. SILT FENCE SHOULD BE SECURELY FASTENED TO EACH SUPPORT POST OR TO WOVEN WIRE WHICH IS IN TURN ATTACHED TO THE FENCE POSTS.
5. INSPECTION SHALL BE FREQUENT AND REPAIR OR REPLACEMENT SHALL BE MADE PROMPTLY AS NEEDED.
6. SILT FENCE SHALL BE REMOVED WHEN IT HAS SERVED ITS USEFULNESS SO AS NOT TO BLOCK OR IMPEDE STORM FLOW OR DRAINAGE.
7. SEDIMENT TRAPPED BY THIS PRACTICE SHALL BE UNIFORMLY DISTRIBUTED ON THE SOURCE AREA PRIOR TO TOPSOILING.
8. SILT FENCE SHALL BE MIRAFI-100X FILTER FABRIC OR APPROVED EQUAL.

SILT FENCE DETAIL

EROSION CONTROL NOTES

1. THE EROSION CONTROL FEATURES AND NOTES SHOWN ON THIS SHEET REPRESENT THE MINIMUM REQUIREMENTS ACCEPTABLE. LOCATIONS ARE TYPICAL AND MAY VARY ACCORDING TO CONTRACTORS STAGING AND LIMITS OF CONSTRUCTION.
2. IT SHALL BE EACH CONTRACTOR'S RESPONSIBILITY TO CONTROL EROSION AND PREVENT POLLUTION FOR ALL WORK WHICH THEY ARE DIRECTLY INVOLVED.
3. IT SHALL BE EACH CONTRACTORS RESPONSIBILITY TO PLACE ADDITIONAL CONTROL DEVICES AS REQUIRED DURING CONSTRUCTION TO PREVENT SOIL LOSS FROM THE SITE. IT SHALL ALSO BE EACH CONTRACTOR'S RESPONSIBILITY TO MAINTAIN THEIR EROSION CONTROL FEATURES IN PROPER WORKING CONDITION UNTIL THE SITE IS STABILIZED BY PAVEMENT, VEGETATION OR OTHER MEANS.
4. WHEN POSSIBLE, WITHOUT ADVERSELY AFFECTING CONSTRUCTION OPERATIONS, THE CONTRACTOR SHALL: MINIMIZE THE AMOUNT OF SURFACE AREA WHICH IS EXPOSED AT ONE TIME, LEAVE GRADED AREAS WITH A ROUGH TEXTURE, CONSTRUCT TEMPORARY TERRACES DURING GRADING OPERATIONS, AND LIMIT UNNECESSARY VEHICLE TRAFFIC IN GRADED AREAS.
5. THE SPILLAGE OF DEBRIS, INCLUDING THE TRACKING OF SOIL, OUTSIDE OF THE CONSTRUCTION LIMITS SHALL BE AVOIDED.
6. STRAW BALE DIKES OR SILT FENCES SHALL BE PLACED ON A CONTOUR ELEVATION ALONG THE DOWNHILL SIDE AND FOR THE FULL EXTENT OF THE DISTURBED AREAS WITHIN THE CONSTRUCTION LIMITS. THE LAST FIVE FEET ON EACH END OF RUN OF SILT FENCE/STRAW BALE DIKE SHALL BE PLACED FACING UPHILL AT 90 DEGREES TO THE CONTOUR LINE.
7. THE CONTRACTOR SHALL PREVENT SILT AND SEDIMENT FROM ENTERING THE STORM SEWER SYSTEM. STRAW BALE DIKES SHALL BE PLACED AROUND ALL STORM SEWER INLETS EXCEPT DURING CONSTRUCTION OPERATIONS WHICH REQUIRE THEIR REMOVAL.
8. CONTRACTOR SHALL INSPECT THEIR EROSION CONTROL DEVICES AFTER ALL RAINFALL EVENTS TO INSURE THEY ARE WORKING PROPERLY. THE CONTRACTOR SHALL ALSO INSPECT THE SITE AFTER ALL RAINFALL EVENTS AND ON A PERIODIC BASIS TO ASSESS THE NEED AND IF PRUDENT, INSTALL ADDITIONAL EROSION CONTROL DEVICES AS REQUIRED.
9. ALL AREAS UPON REACHING FINAL GRADE SHALL BE BROUGHT TO FINAL PLAN CONDITION (PAVED, MULCHED AND SEEDED, SODDED, OR OTHER) AS SOON AS POSSIBLE.

NO.	DATE	REVISIONS	BY	APP'D
1	9-21-09	REVISED SERVICE LINES 1,2,& 3	RAY	MMH
2				
3				
4				
5				

COPYRIGHT ©-2009-SHAFER, KLINE & WARREN INC.
MISSOURI CERTIFICATE OF AUTHORITY: F001139850

Designed By: RCW
Drawn By: RCW
Checked By: MMH
Issue Date: 7-17-09

MICHAEL MELVIN HALL
STATE OF MISSOURI
NUMBER E-30044
REGISTERED PROFESSIONAL ENGINEER
E-30044

SHAFER, KLINE & WARREN, INC.
1400 Forum Boulevard, Suite 19A, Columbia, MO 65203-1997
573/442-4537 FAX: 573/442-4543
OFFICE LOCATIONS: Chillicothe, MO Columbia, MO Houston, TX
Iola, KS Kansas City, MO Lenexa, KS
Macon, MO North Kansas City, MO Tulsa, OK
CIVIL ENGINEERS ELECTRICAL ENGINEERS MECHANICAL ENGINEERS STRUCTURAL ENGINEERS LANDSCAPE ARCHITECTS LAND SURVEYORS LAND PLANNERS

MARSHALL MoDOT MAINTENANCE FACILITY
MARSHALL, MISSOURI

EROSION CONTROL PLAN & DETAILS

800160-020

SHEET NO. 5 OF 6

P:\800160-020_ACAD\CIVIL\800160-020-EROSION CONTROL.DWG
LAYOUT: EROSION CONTROL DATE: 9/21/2009
XREF DWG1: NONE XREF DWG2: NONE
XREF DWG3: NONE XREF DWG4: NONE

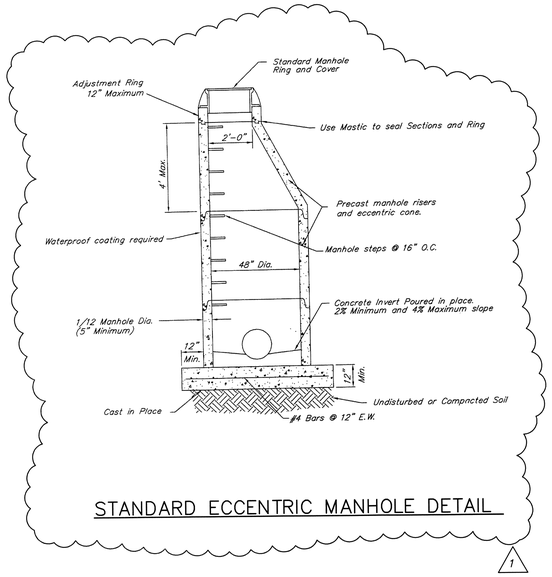

STANDARD ECCENTRIC MANHOLE DETAIL

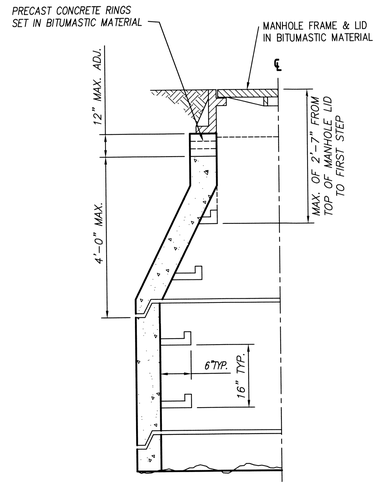

BARREL SECTION

NOTES:
IF MORE THAN 12" OF ADJUSTMENT IS NEEDED, REMOVE CONE SECTION AND ADD OR REMOVE BARREL SECTIONS AS NECESSARY.

MANHOLE ADJUSTMENT DETAIL

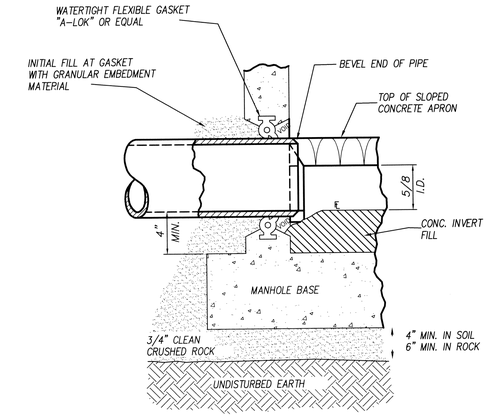

NOTE:
1. BITUMINOUS COATING ON EXTERIOR SURFACE OF MANHOLE SHALL NOT COME IN CONTACT WITH PIPE GASKET.
2. FOR CAST-IN-PLACE CONCRETE MANHOLES OR PRE-CAST WITH BOX-OUTS, THE PIPE GASKET SHALL BE A RUBBER LABYRINTH WATERSTOP WITH STAINLESS STEEL CLAMPING BANDS LOCATED AT CENTER OF WALL AND THE SPACE BETWEEN PIPE & WALL COMPLETELY GROUTED WITH NONSHRINKING MORTAR.
3. PIPE MAY PROJECT 1" MAXIMUM PAST INSIDE WALL OF MANHOLE. BUT NO CONTACT BETWEEN PIPE & INVERT.

MANHOLE GASKET DETAIL

BEFORE YOU DIG – DRILL – BLAST
Call 1-800-344-7483 (TOLL FREE)
MISSOURI ONE CALL SYSTEM, INC.

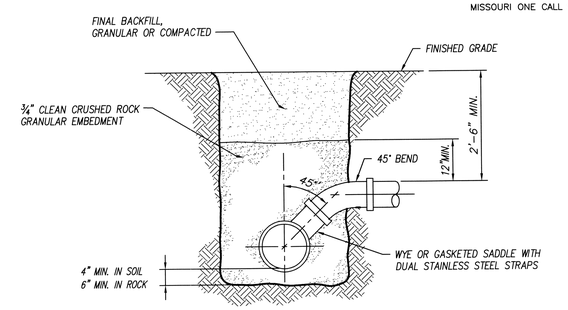

STANDARD SERVICE CONNECTION DETAIL

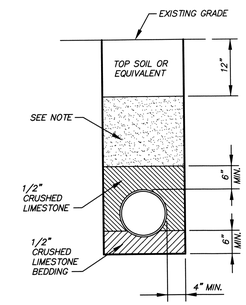

TRENCH OUTSIDE OF ROADWAY

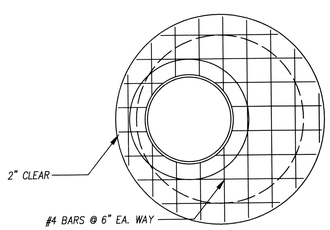

PLAN VIEW

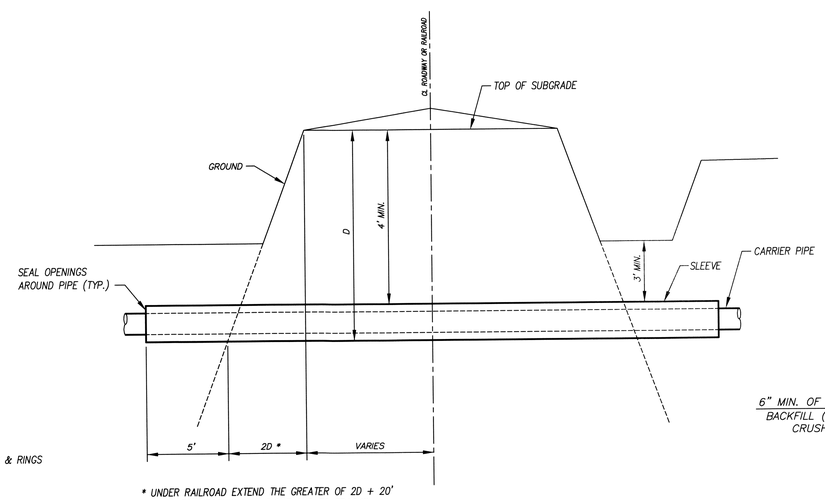

* UNDER RAILROAD EXTEND THE GREATER OF 2D + 20' OR 30' MEASURED AT RIGHT AND TO TRACKS.

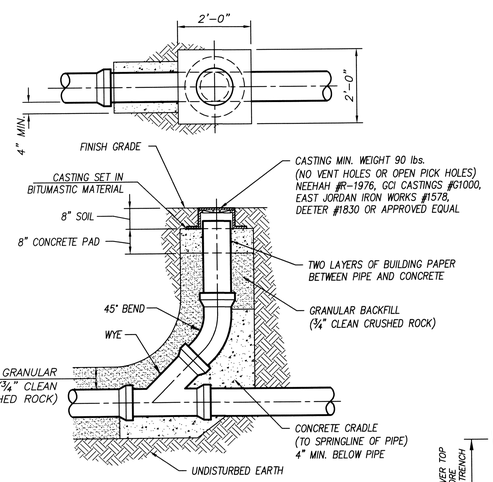

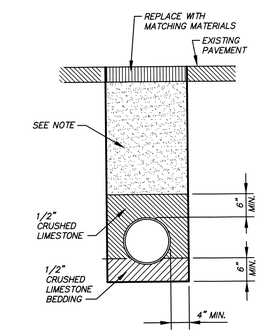

TRENCH IN ROADWAY

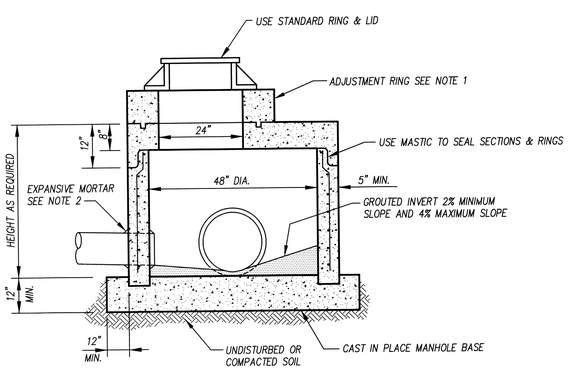

NOTES:
1. ADJUSTMENT RINGS ARE NOT TO EXCEED 12" TOTAL ADJUSTMENT.
2. USE EXPANSIVE MORTAR AROUND PIPES ON INTERIOR AND EXTERIOR OF MANHOLE.
3. PRECAST SECTIONS WILL BE USED.
4. BASE IS TO BE CAST IN PLACE.
5. USE 6 SACK CONCRETE MIX WITH A 4" MAXIMUM SLUMP.

SHALLOW MANHOLE DETAIL

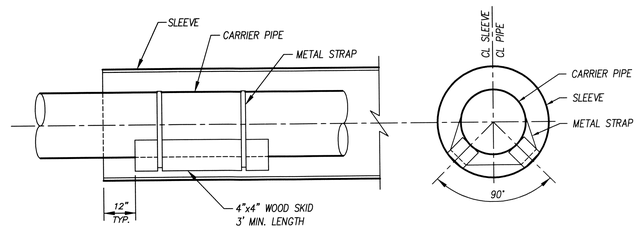

ENCASEMENT DETAIL

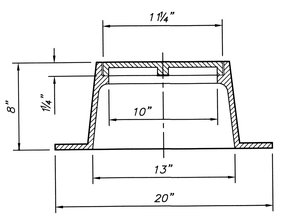

CLEANOUT DETAIL

NOTE: DISTANCE FROM CENTER OF DOWNSTREAM MANHOLE TO CENTER OF CLEANOUT SHALL BE 300 FEET OR LESS.

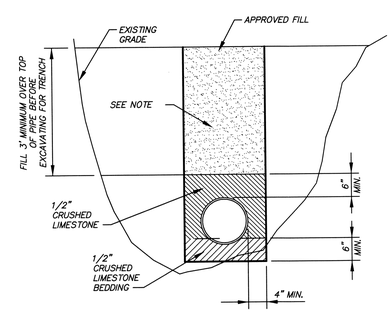

TRENCH IN FILL AREA

NOTE:
TRENCHES OUTSIDE OF ROADWAYS ARE TO BE COMPACTED TO A MINIMUM OF 90% OPTIMUM DENSITY, TRENCHES WITHIN ROADWAYS ARE TO BE COMPACTED TO A MINIMUM OF 95% OPTIMUM DENSITY.

PIPE EMBEDMENT DETAILS

NO.	DATE	REVISIONS	BY	APP'D
5				
4				
3				
2				
1	8-19-09	ADDED ECCENTRIC MANHOLE DETAIL	ELM	MMH

COPYRIGHT © 2009-SHAFER, KLINE & WARREN INC.
MISSOURI CERTIFICATE OF AUTHORITY: F0013950

Designed By: RW
Drawn By: ELM
Checked By: MMH
Issue Date: 7-17-09

MICHAEL MELVIN HALL
STATE OF MISSOURI
MICHAEL MELVIN HALL
NUMBER E-30044
REGISTERED PROFESSIONAL ENGINEER
8-19-09

SHAFER, KLINE & WARREN, INC.
1400 Forum Boulevard, Suite 19A, Columbia, MO 65203-1997
573/442-4537 FAX: 573/442-4543
OFFICE LOCATIONS: Chillicothe, MO; Columbia, MO; Houston, TX; Iola, KS; Kansas City, MO; Lenexa, KS; Macon, MO; North Kansas City, MO; Tulsa, OK
CIVIL ENGINEERS ELECTRICAL ENGINEERS MECHANICAL ENGINEERS STRUCTURAL ENGINEERS LANDSCAPE ARCHITECTS LAND SURVEYORS LAND PLANNERS

MARSHALL MODOT MAINTENANCE FACILITY
MARSHALL, SALINE COUNTY, MISSOURI

SEWER EXTENSION DETAILS

800160-020
SHEET NO. 6 OF 6

P:\800160-020_ACAD\CIVIL\800160-020-DETAILS.DWG
LAYOUT: LAYOUT1 BY: EMCCUE DATE: 8/19/2009
XREF DWG1: NONE XREF DWG2: NONE
XREF DWG3: NONE XREF DWG4: NONE