MISSOURI HIGHWAY AND TRANSPORTATION COMMISSION

STATE	PROJ NO	SHEET NO
MO.		173
SEC / SUB 34	TWP 48N	RGE 33W

(151'-151') CONT. COMP. ℞ GIRDER SPANS WITH SEMI-DEEP ABUTMENTS

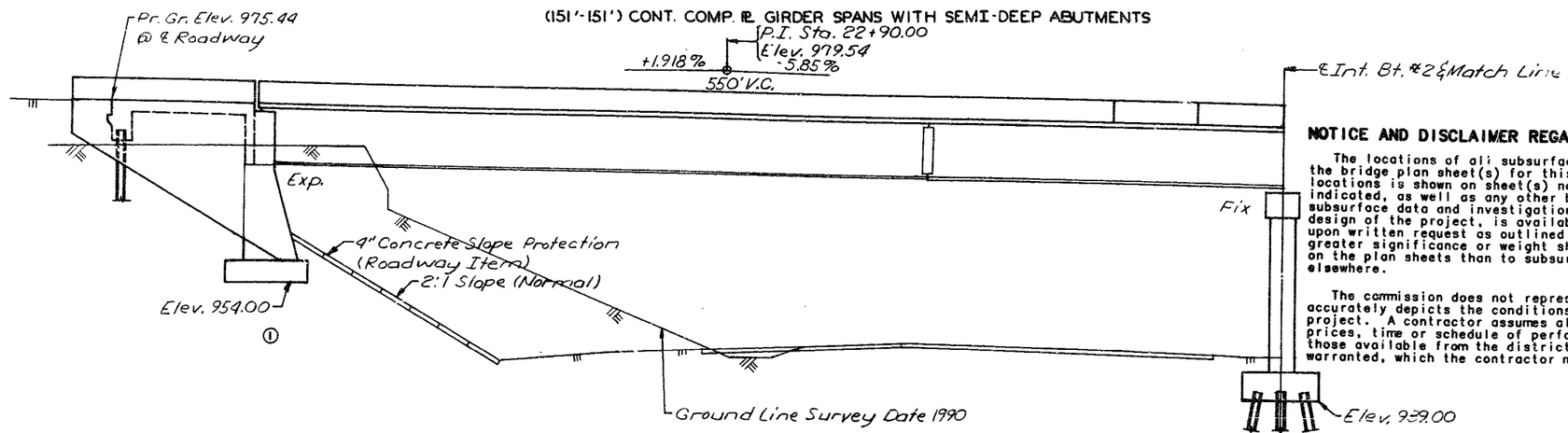

Note; Cost of removal of existing footing shall be included in the cost of Removal of Bridges (A-1792).

PART GENERAL ELEVATION

Note; A minimum vertical clearance of 15'-0" from crown of existing lanes and a minimum lateral lateral clearance of 40'-0" centered on existing lanes shall be maintained during construction.

NOTICE AND DISCLAIMER REGARDING BORING LOG DATA

The locations of all subsurface boring for this structure are shown on the bridge plan sheet(s) for this structure. Boring data for the numbered locations is shown on sheet(s) no.3 The boring data for all locations indicated, as well as any other boring logs or other factual records of subsurface data and investigations performed by the department for the design of the project, is available from the district materials engineer upon written request as outlined in the project special provisions. No greater significance or weight should be given to the boring data depicted on the plan sheets than to subsurface data available from the district or elsewhere.

The commission does not represent or warrant that any such boring data accurately depicts the conditions to be encountered in constructing this project. A contractor assumes all risks it may encounter in basing its bid prices, time or schedule of performance on the boring data depicted here or those available from the district, or on any other documentation not expressly warranted, which the contractor may obtain from the commission.

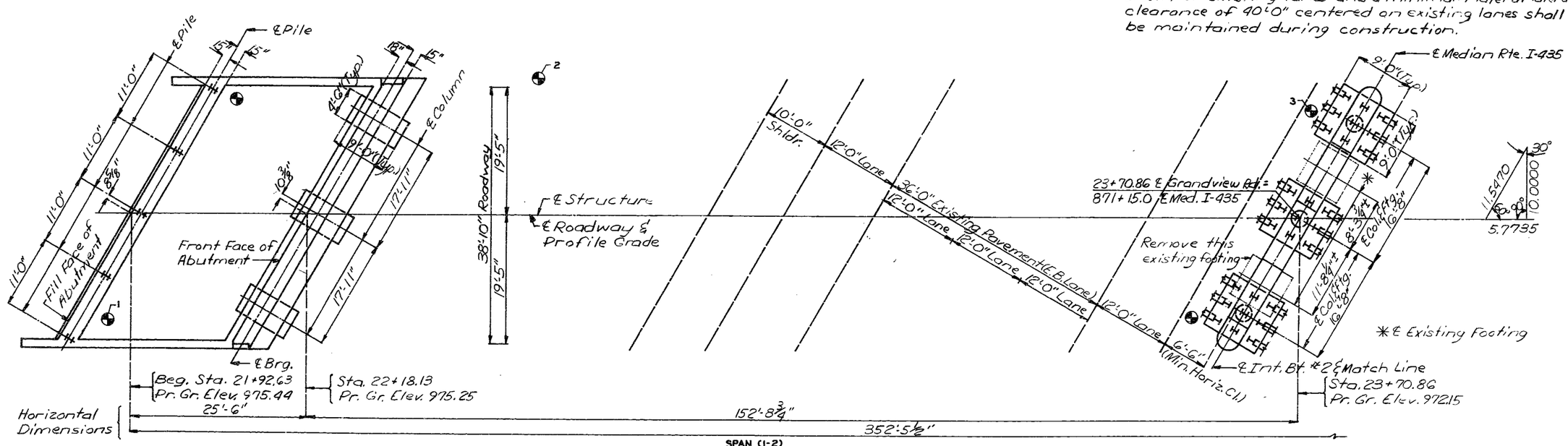

SPAN (1-2)
PART PLAN

Note: "●" Indicates location of borings. Boring Data for all locations is available upon request from the District Office. Boring data for numbered locations is detailed on sheet No.3

For General Notes, Estimated Quantities & Pile Data see sheet No.9.

CURVE DATA GRANDVIEW RD.

P.I. 21.19.20	P.I. 28+04.32
Δ = 60°00' Rt.	Δ = 14°20' Rt
R = 150'	D = 12°
T = 86.60'	T = 60.16'
L = 157.08'	L = 119.44'
S.E. = Var.	S.E. = 0.02%
Ls = 150'	R = 478.3 Cord

B.M. T.B.M. #2 Elev. 962.89 Chiseled □ On N.W. Cor. Br. Curb 17'± Lt./o 25+19± ⓑ N.W. Cor. Bridge A-1792

BRIDGE: GRANDVIEW ROAD UNDERPASS

STATE ROAD: INTERSTATE ROUTE 435

IN KANSAS CITY

PROJECT NO. STA. 871+15.0

JOB NO. J4I0807 RTE. I-435

JACKSON **COUNTY**

DATE 3/1/94

STD. 504.00
STD. 605.10
STD. 609.00
STD. 706.35
STD. 611.60
A-5249

DESIGNED JUN. 1992
DETAILED JUN. 1992
CHECKED July 1992

Note: This drawing is not to scale. Follow dimensions.

Sheet No. 1 of 33.

QUALITY REPRO

188 139

STATE	PROJ NO	SHEET NO
MO		174

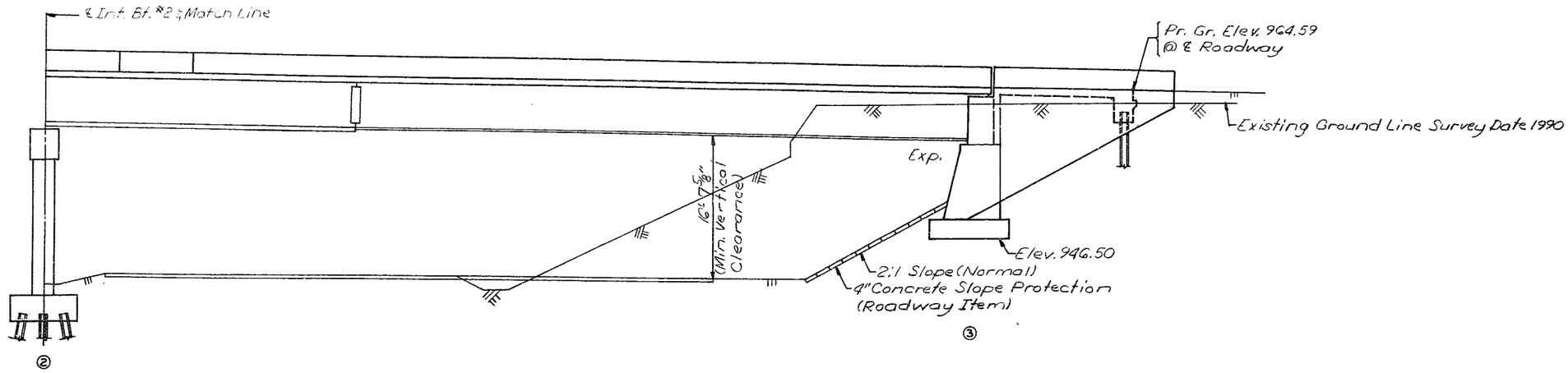

PART GENERAL ELEVATION

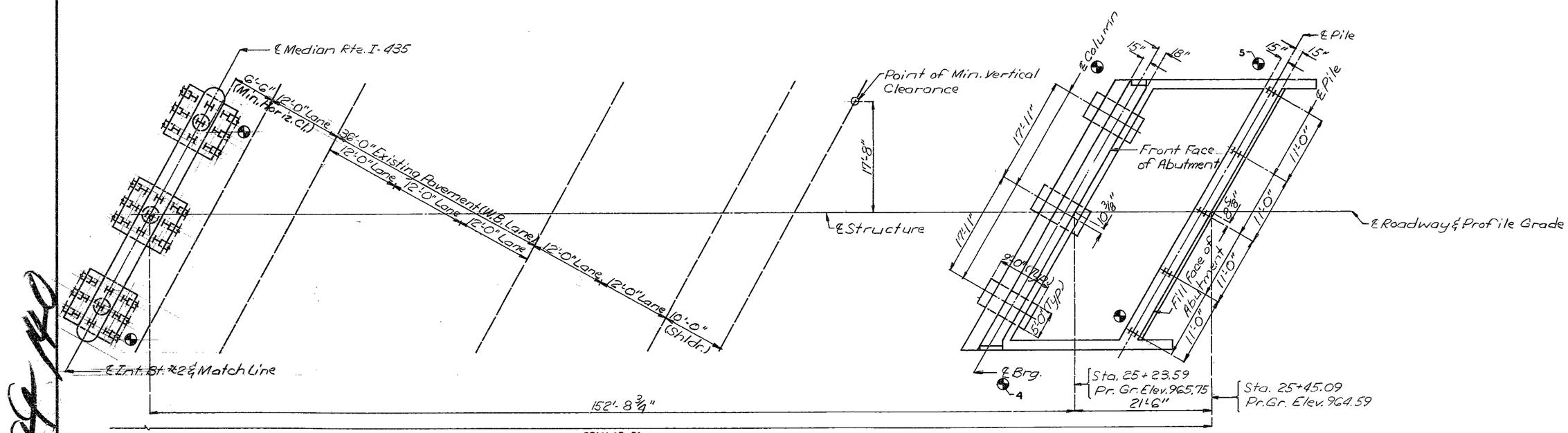

SPAN (2-3)
PART PLAN

Note: "●" Indicates location of borings. Boring Data for all locations is available upon request from the District Office.
Boring data for numbered locations is detailed on sheet No. 3

DETAILED Jun. 1992
CHECKED July 1992

Note: This drawing is not to scale. Follow dimensions.

Sheet No. 2 of 33.

JACKSON COUNTY

A-5249

STATE	PROJ. NO.	SHEET NO.
MO.		175

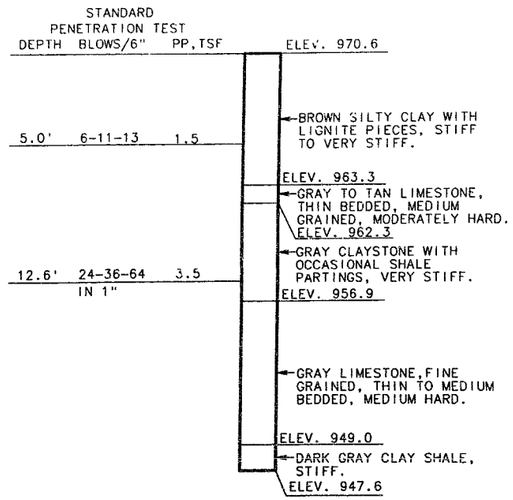

① CORE

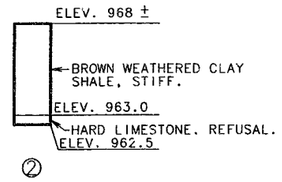

②

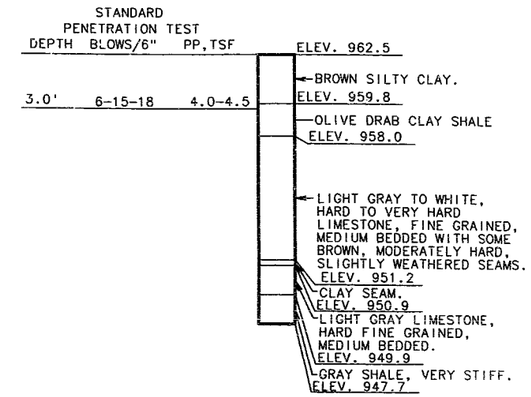

④ CORE

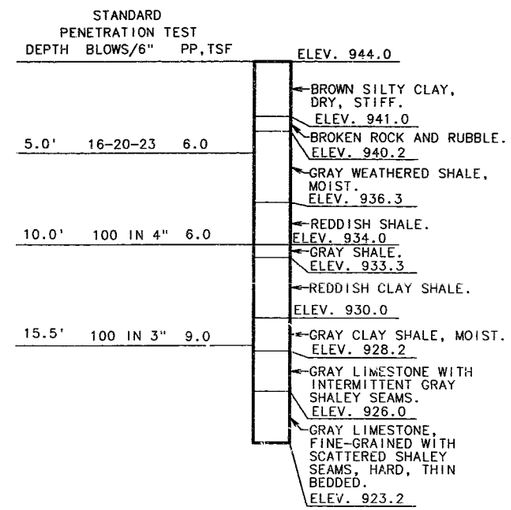

③ CORE

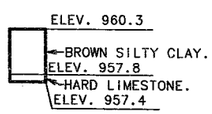

⑤

NOTE: FOR LOCATION OF BORINGS SEE SHEET NOS. 1 & 2.

BORING DATA

DETAILED MAY 1992
CHECKED JULY 1992

NOTE: THIS DRAWING IS NOT TO SCALE. FOLLOW DIMENSIONS.

JACKSON COUNTY

A-5249

380 141

STATE	PROJ. NO.	SHEET NO.
MO.		176

ESTIMATED QUANTITIES

ITEM		SUBSTR.	SUPERSTR	TOTAL
REMOVAL OF BRIDGES (A-1792)	LUMP SUM			1
CLASS 1 EXCAVATION	CU. YD.	270		270
BRIDGE APPROACH SLAB(BRIDGE)	SQ. YD.		221	221
STRUCTURAL STEEL PILE (10 IN.)	LIN. FT.	444		444
PRE-BORE FOR PILING	LIN. FT.	398		398
CLASS B CONCRETE (SUBSTR.)	CU. YD.	274.2		274.2
SLAB ON STEEL	SQ. YD.		1407	1407
** SAFETY BARRIER CURB	LIN. FT.		726	726
SLAB ON SEMI-DEEP ABUTMENT	SQ. YD.		217	217
LAMINATED NEOPRENE BRG. PADS (STEEL STRUCTURES)	EACH		15	15
PREFORMED COMPRESSION EXP. JT. SEAL (4.5")	LIN. FT.		90	90
REINFORCING STEEL (BRIDGES)	POUND	40940		40940
REINFORCING STEEL (EPOXY COATED)	POUND	2500		2500
FABRICATED STRUCTURAL CARBON STEEL (PLT GDR)	POUND		263930	263930
FABRICATED STEEL SIGN SUPPORT BRACKETS(STEEL)	LUMP SUM			1
FABRICATED STR. LOW ALLOY STEEL (PLT GDR) A-572	POUND		189590	189590
SLAB DRAINS	EACH		16	16
CONDUIT SYSTEM ON STRUCTURE	LUMP SUM			1

NOTE: THE COST OF PAINTING STRUCTURAL STEEL SHALL BE INCLUDED IN PRICE BID FOR FABRICATED STRUCTURAL STEEL.

ALL CONCRETE AND REINFORCING STEEL BELOW TOP OF SLAB AND ABOVE CONSTRUCTION JOINT UNDER SLAB IN SEMI-DEEP ABUTMENTS ARE INCLUDED IN SUPERSTRUCTURE QUANTITIES FOR SLAB ON SEMI-DEEP ABUTMENTS.

THE PRESTRESSED PANEL QUANTITIES ARE NOT INCLUDED IN THE TABLE OF ESTIMATED QUANTITIES FOR ALTERNATE SLAB.

** SAFETY BARRIER CURB SHALL BE CAST-IN-PLACE OPTION OR SLIP-FORM OPTION.

ESTIMATED QUANTITIES FOR ALTERNATE SLABS

TYPE OF SLABS	SLAB ON STEEL	
	REINF.(LBS.) EPOXY	CONC. (CU. YDS.)
CAST-IN-PLACE CONVENTIONAL FORMS	88010	347.7
PRECAST PANEL FORMS	56420	257.3

NOTE: THE TABLE OF ESTIMATED QUANTITIES FOR ALTERNATE SLABS REPRESENTS THE QUANTITIES USED BY THE STATE IN PREPARING THE COST ESTIMATE FOR CONCRETE SLABS. VARIATIONS MAY BE ENCOUNTERED IN THESE ESTIMATED QUANTITIES, BUT THESE VARIATIONS CANNOT BE USED FOR AN ADJUSTMENT IN THE CONTRACT UNIT PRICE PER SQUARE YARD OF ALTERNATE SLAB USED.

SEE SPECIAL PROVISIONS FOR ALTERNATE METHODS OF FORMING SLABS.

PRECAST PANEL QUANTITES ARE BASED ON SKEWED END PANELS.

PILE & FOOTING DATA

LOCATION		1 APP.	1 BRG.	2	3 BRG.	3 APP.
BEARING PILE	PILE TYPE AND SIZE	HP10x42		HP10x42		HP10x42
	NUMBER	5		27		5
	APPROXIMATE LENGTH FT.	(1)		12		11
	DESIGN BEARING TONS	40		52		34
	HAMMER ENERGY REQUIRED FT.-LBS.	8,800				7,400
SPREAD FOOTING	FOUNDATION MATERIAL		ROCK		ROCK	
	DESIGN BEARING TONS/SQ.FT.		6.7		5.8	

MINIMUM ENERGY REQUIREMENT OF HAMMER IS BASED ON PLAN LENGTH AND DESIGN BEARING VALUE OF PILES.
ALL PILE SHALL BE DRIVEN TO PRACTICAL REFUSAL.
PREBORE FOR PILES AT BENTS 1, 2 & 3 TO ELEVATIONS (2) 928.00 AND 951.00 RESPECTIVELY.

(1) 11'LT.,15'RT.

(2) 961.50(LT.), 957.00(RT.)

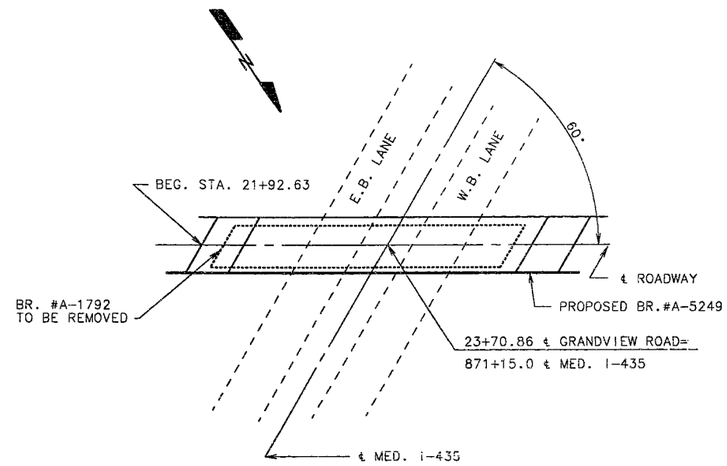

LOCATION SKETCH

GENERAL NOTES:

DESIGN SPECIFICATIONS: A.A.S.H.T.O.-1992
LOAD FACTOR DESIGN
SEISMIC PERFORMANCE CATEGORY A

DESIGN LOADING
HS20-44, MODIFIED 24,000# TANDEM AXLE
35#/SQ.FT. FUTURE WEARING SURFACE
EARTH 120#/CU. FT. EQUIVALENT FLUID PRESSURE 45#/CU. FT.
FATIGUE STRESS - CASE II

DESIGN UNIT STRESSES:
CLASS B CONCRETE (SUBSTRUCTURE) F'C=3,000 PSI
CLASS B1 CONCRETE (SAFETY BARRIER CURB) F'C=4,000 PSI
CLASS B2 CONCRETE (SUPERSTRUCTURE, EXCEPT SAFETY BARRIER CURB) F'C=4,000 PSI
REINFORCING STEEL (GRADE 60) FY=60,000 PSI
STRUCTURAL CARBON STEEL FY=36,000 PSI
STRUCTURAL STEEL (A.S.T.M. A572) GRADE 50 FY=50,000 PSI
STEEL PILE FB=9000 PSI
FOR PRECAST PRESTRESSED PANEL STRESSES, SEE SHEET 19.

FABRICATED STEEL CONNECTIONS: FIELD CONNECTIONS, HIGH STRENGTH BOLTS 3/4"Ø, HOLES 13/16"Ø, EXCEPT AS NOTED.
HIGH STRENGTH BOLTS, NUTS AND WASHERS WILL BE SAMPLED FOR QUALITY ASSURANCE AS SPECIFIED IN STANDARD SPECIFICATION 106.

JOINT FILLER: ALL JOINT FILLER SHALL MEET THE REQUIREMENTS OF STD. SPEC. 1057.2.4, EXCEPT AS NOTED.

REINFORCING STEEL: MINIMUM CLEARANCE TO REINFORCING STEEL SHALL BE 1 1/2", UNLESS OTHERWISE SHOWN.
ALL REINFORCING BARS IN TOPS OF SUBSTRUCTURE BEAMS OR CAPS SHALL BE SPACED TO CLEAR ANCHOR BOLTS FOR BEARING BY AT LEAST $\frac{1}{2}$"

PAINT: SYSTEM E SHOP COATS (GRAY) IN ACCORDANCE WITH THE SPECIAL PROVISIONS. NO FIELD PAINTING EXCEPT FOR TOUCH UP.

SEE ROADWAY PLANS FOR REMOVAL, STORAGE AND INSTALLATION OF LIGHT FIXTURE SUPPORTS.

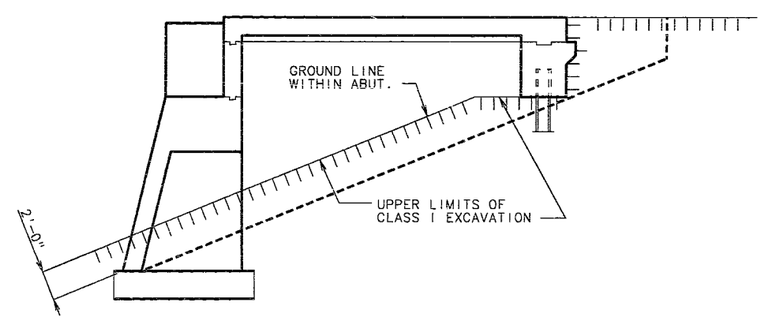

GROUND LINE AND PILING IN ABUTMENTS

NOTE: IN NO CASE SHALL THE EARTH WITHIN ABUTMENTS NO.1 AND 3 BE ABOVE THE GROUND LINE SHOWN. FORMS SUPPORTING ABUTMENT SLAB MAY BE LEFT IN PLACE.

NOTE: TOP OF ABUTMENT SLAB AND EXPANSION DEVICE FOR ABUTMENT NO.1 SHALL CONFORM TO CROWN OF ROADWAY SLAB.

STATE	PROJ. NO.	SHEET NO.
MO.		177

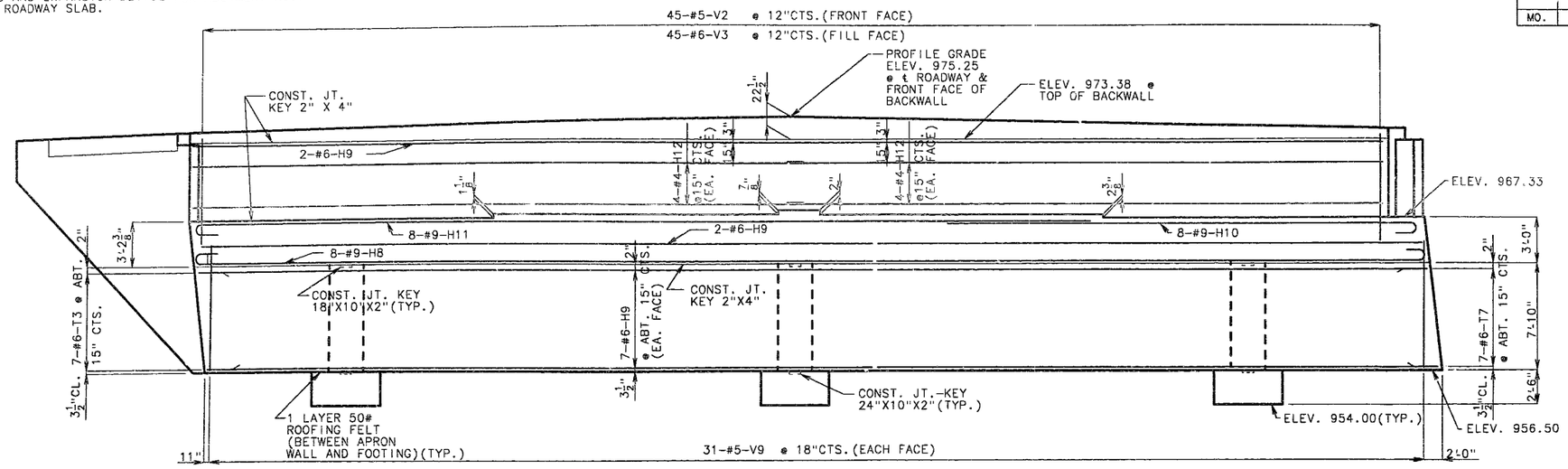

ELEVATION

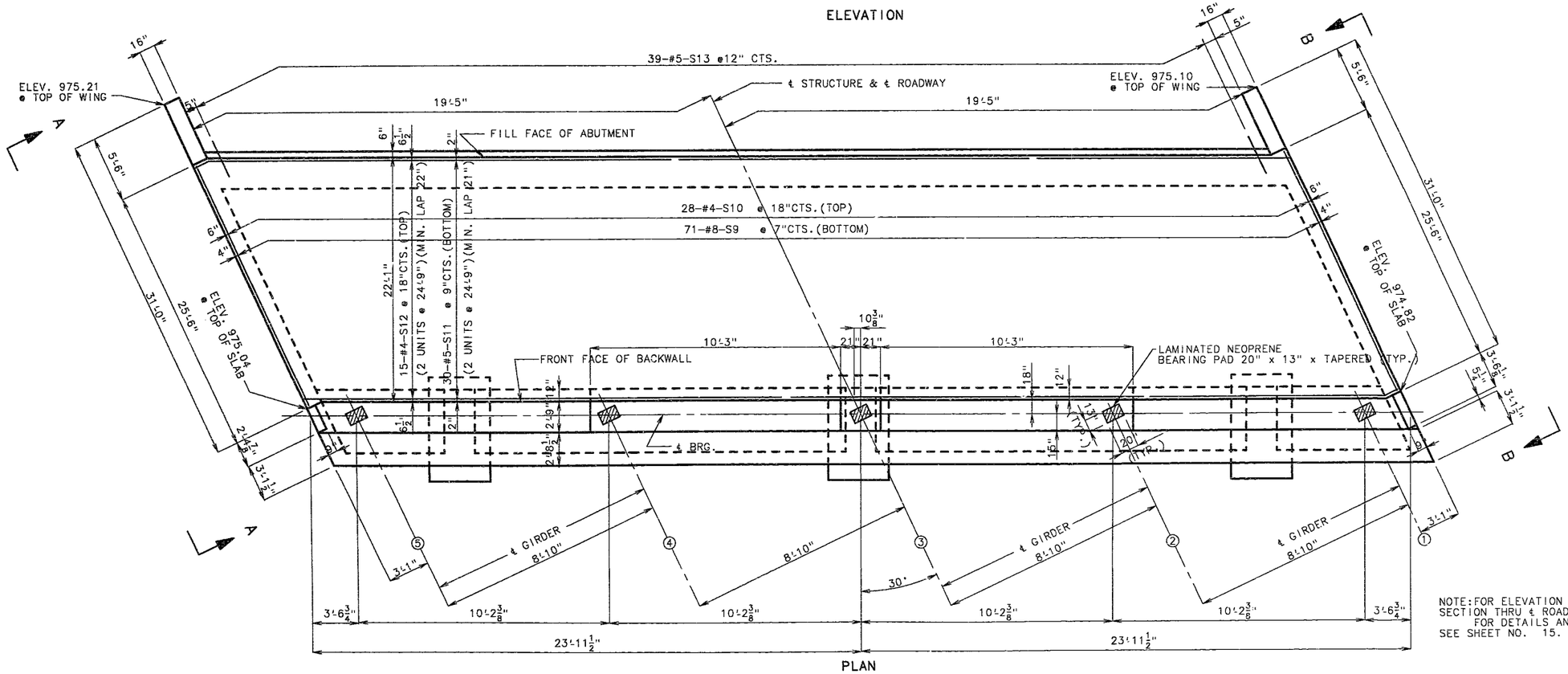

PLAN

NOTE: FOR ELEVATION A-A, ELEVATION B-B, AND SECTION THRU ℄ ROADWAY, SEE SHEET NO. 7. FOR DETAILS AND PLAN OF ANCHOR BOLTS, SEE SHEET NO. 15.

DETAILS OF ABUTMENT NO. 1

DETAILED MAY 1992
CHECKED JULY 1992

NOTE: THIS DRAWING IS NOT TO SCALE. FOLLOW DIMENSIONS.

SHEET NO. 5 OF 33.

JACKSON COUNTY

A-5249

202-143

STATE	PROJ. NO.	SHEET NO.
MO.		178

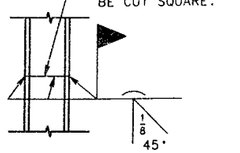

STEEL PILE SPLICE

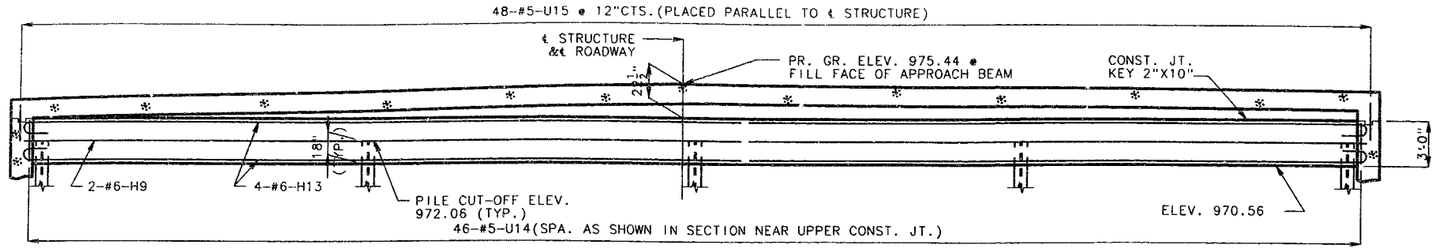

SECTION NEAR APPROACH BEAM

NOTE: FOR DETAILS AND REINFORCEMENT OF BARRIER CURB SEE SHEET NO. 24. #5-R BARS MUST BE IN PLACE BEFORE SLAB IS POURED.

NOTE: FIELD BENDING SHALL BE REQUIRED AT WINGS FOR #6-H9 AND #4-H12

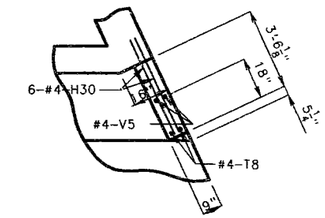

DETAIL "D"

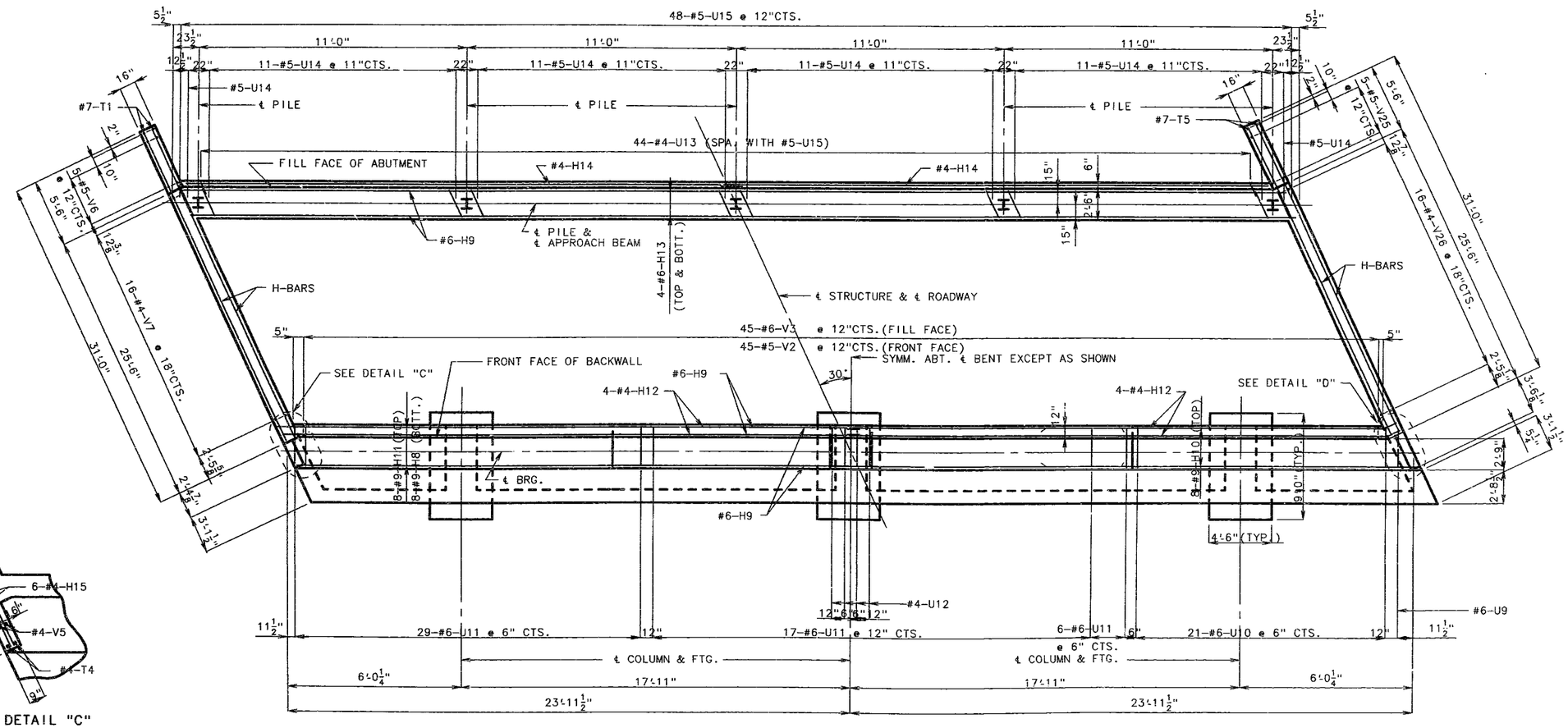

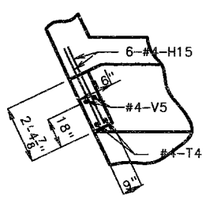

DETAIL "C"

SECTION NEAR UPPER CONSTRUCTION JOINT

DETAILS OF ABUTMENT NO. 1

DETAILED MAY 1991
CHECKED JULY 1992

NOTE: THIS DRAWING IS NOT TO SCALE. FOLLOW DIMENSIONS.

SHEET NO. 6 OF 33.

JACKSON COUNTY

A-5249

203 144

STATE	PROJ. NO.	SHEET NO.
MO.		179

NOTE: FOR LOCATION OF ELEVATION A-A & B-B SEE SHEET NO. 5.

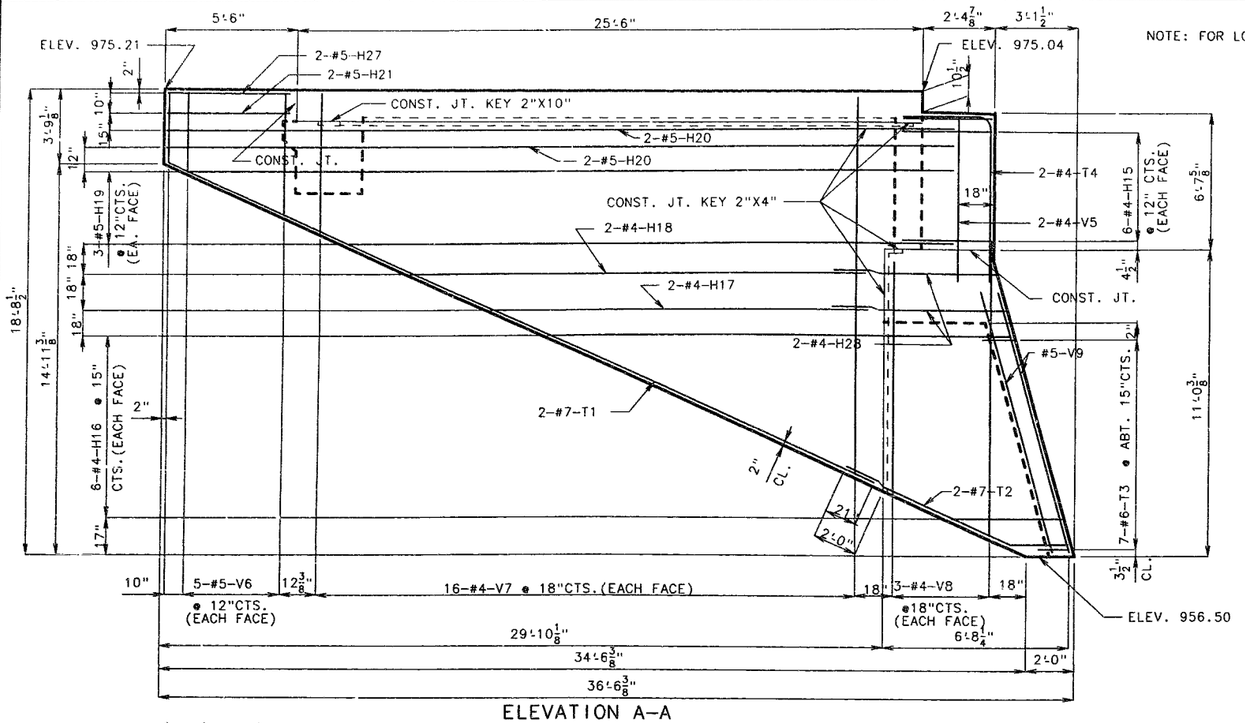

ELEVATION A-A

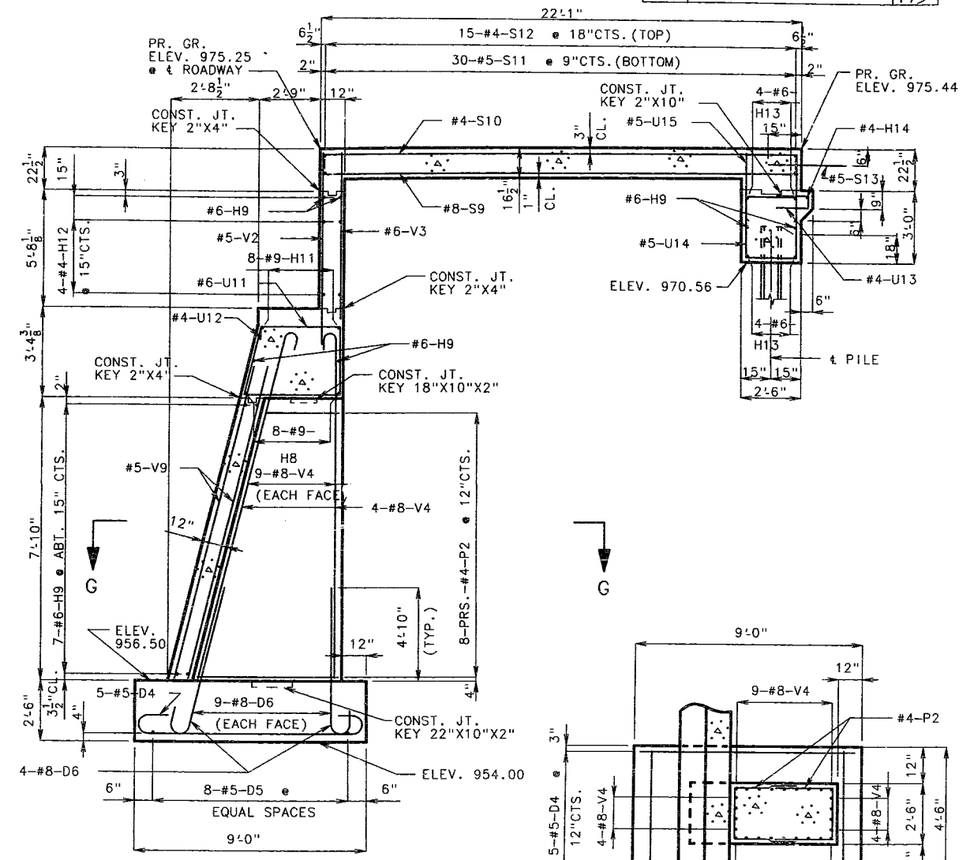

SECTION THRU ℄ ROADWAY
(NORMAL TO BENT)

NOTE: FOR DETAILS AND REINFORCEMENT OF BARRIER CURB SEE SHEET NO. 24. #5-R BARS MUST BE IN PLACE BEFORE SLAB IS POURED.

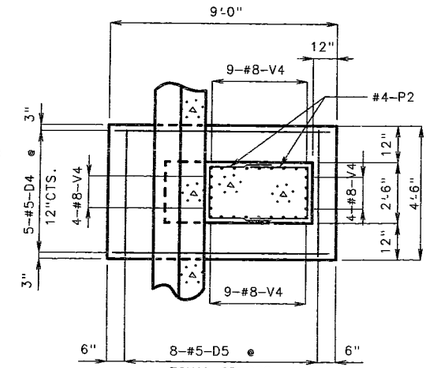

NOTE: REINFORCING STEEL IN APRON WALL NOT SHOWN FOR CLARITY.

SECTION G-G

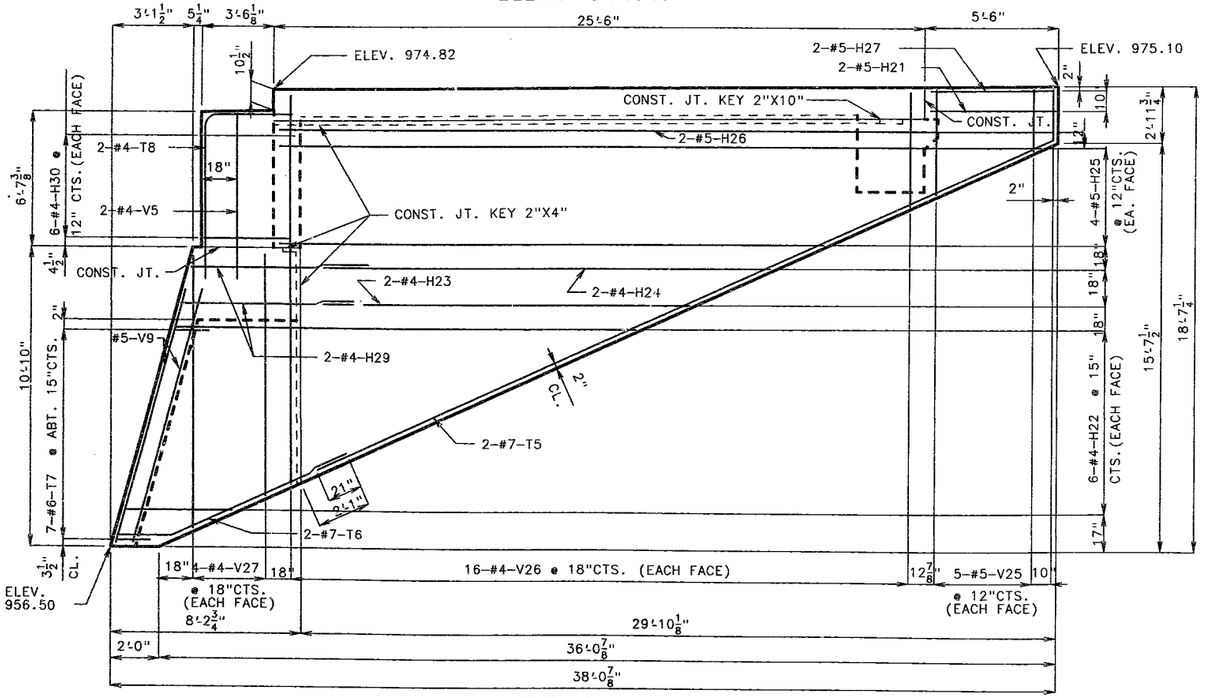

ELEVATION B-B

SUBSTRUCTURE QUANTITY TABLE FOR BENT NO.1

ITEM		QUANTITY
CLASS 1 EXCAVATION	CU. YD.	100
STRUCTURAL STEEL PILE(10")	LIN. FT.	65
PRE-BORE FOR PILING	LIN. FT.	56
CLASS B CONCRETE(SUBSTRUCTURE)	CU. YD.	104.4
REINFORCING STEEL (BRIDGES)	LBS.	14300
REINFORCING STEEL (EPOXY COATED)	LBS.	1400

NOTE: WORK THIS TABLE WITH ESTIMATED QUANTITIES AS SHOWN ON SHEET NO. 4.

DETAILED MAY 1992
CHECKED JULY 1992

NOTE: THIS DRAWING IS NOT TO SCALE. FOLLOW DIMENSIONS.

DETAILS OF ABUTMENT NO. 1

JACKSON COUNTY

A-5249

204 195

STATE	PROJ NO	SHEET NO
MO		180

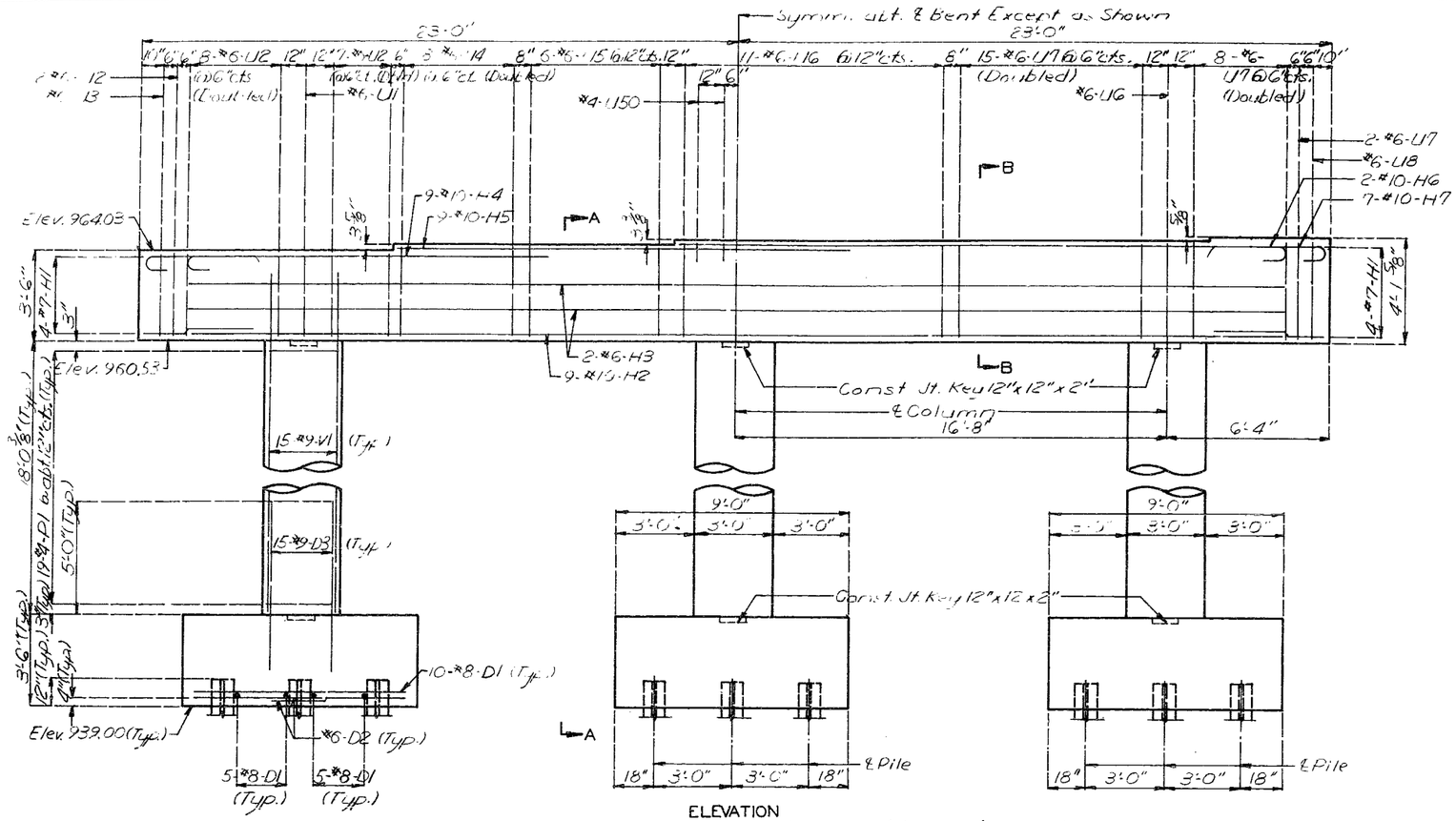

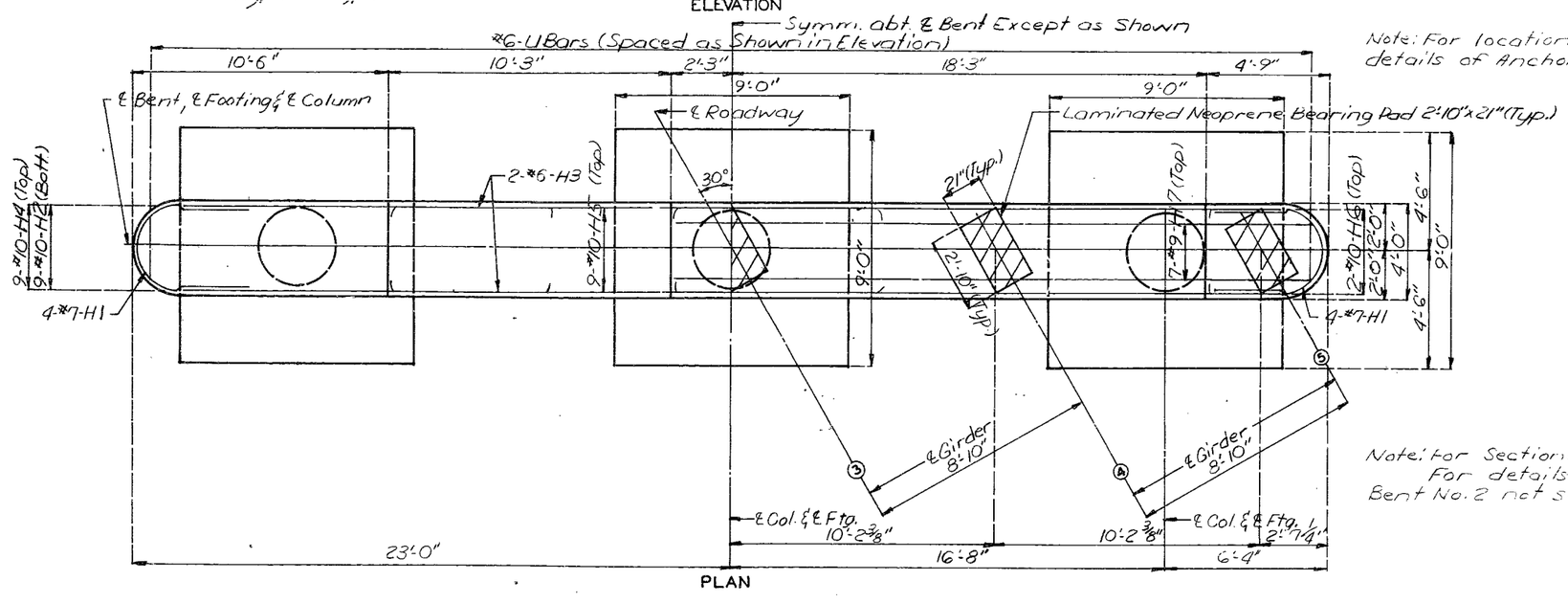

Note: For location of Anchor Bolt Wells and details of Anchor Bolt Wells see sheet No. 15.

Note: For Section B-B see sheet No. 9. For details of Intermediate Bent No. 2 not shown see sheet No. 9.

DETAILS OF INTERMEDIATE BENT NO. 2

DETAILED JUN. 1992
CHECKED July 1992

Note: This drawing is not to scale. Follow dimensions.

Sheet No. 8 of 33.

COUNTY

A-5249

785 196

STATE	PROJ. NO.	SHEET NO.
MO.		181

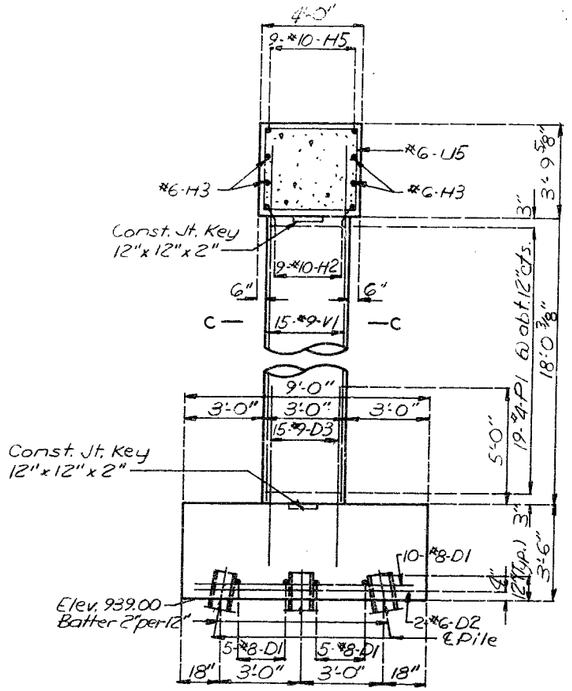

SECTION A-A

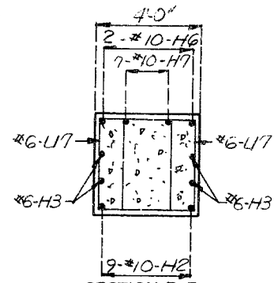

SECTION B-B

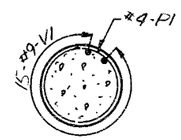

SECTION C-C

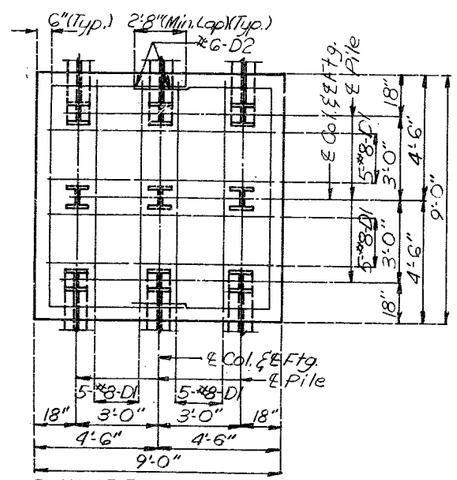

PLAN OF FOOTING SHOWING REINFORCEMENT

Note: For Detail of Pile Splice see sheet No. 6.

Note: For location of Section B-B see sheet No. 8.
For details of Intermediate Bent No. 2 not shown see sheet No. 8.

SUBSTRUCTURE QUANTITY TABLE FOR BENT NO. 2		
ITEM		QUANTITY
Class I Excavation	Cu. Yds.	70
Structural Steel Pile (10")	Lin. Ft.	324
Pre-bore For Piling	Lin. Ft.	297
Class B Concrete (Substructure)	Cu. Yds	71.1
Reinforcing Steel	Lbs.	13620

Note: Work this table with estimated quantities as shown on sheet No. 4.

DETAILS OF INTERMEDIATE BENT NO. 2

DETAILED JUN. 1992
CHECKED July 1992

Note: This drawing is not to scale. Follow dimensions.

JACKSON COUNTY

A-5249

286 147

STATE	PROJ. NO.	SHEET NO.
MO.		182

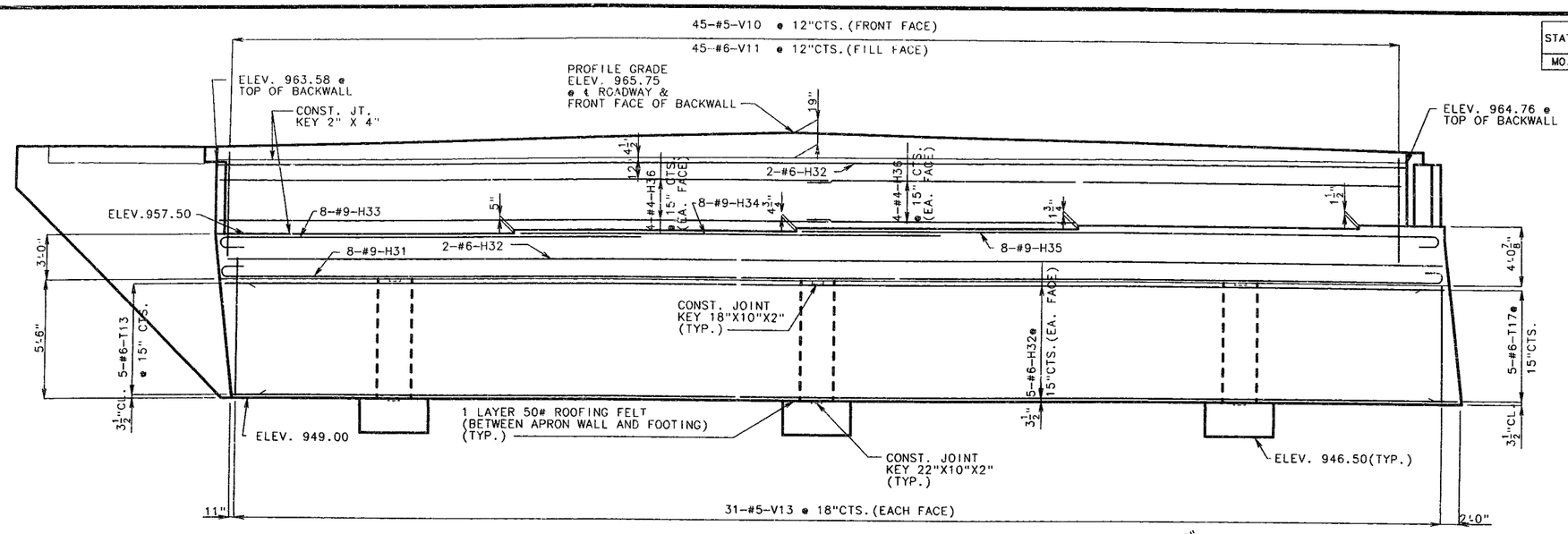

ELEVATION

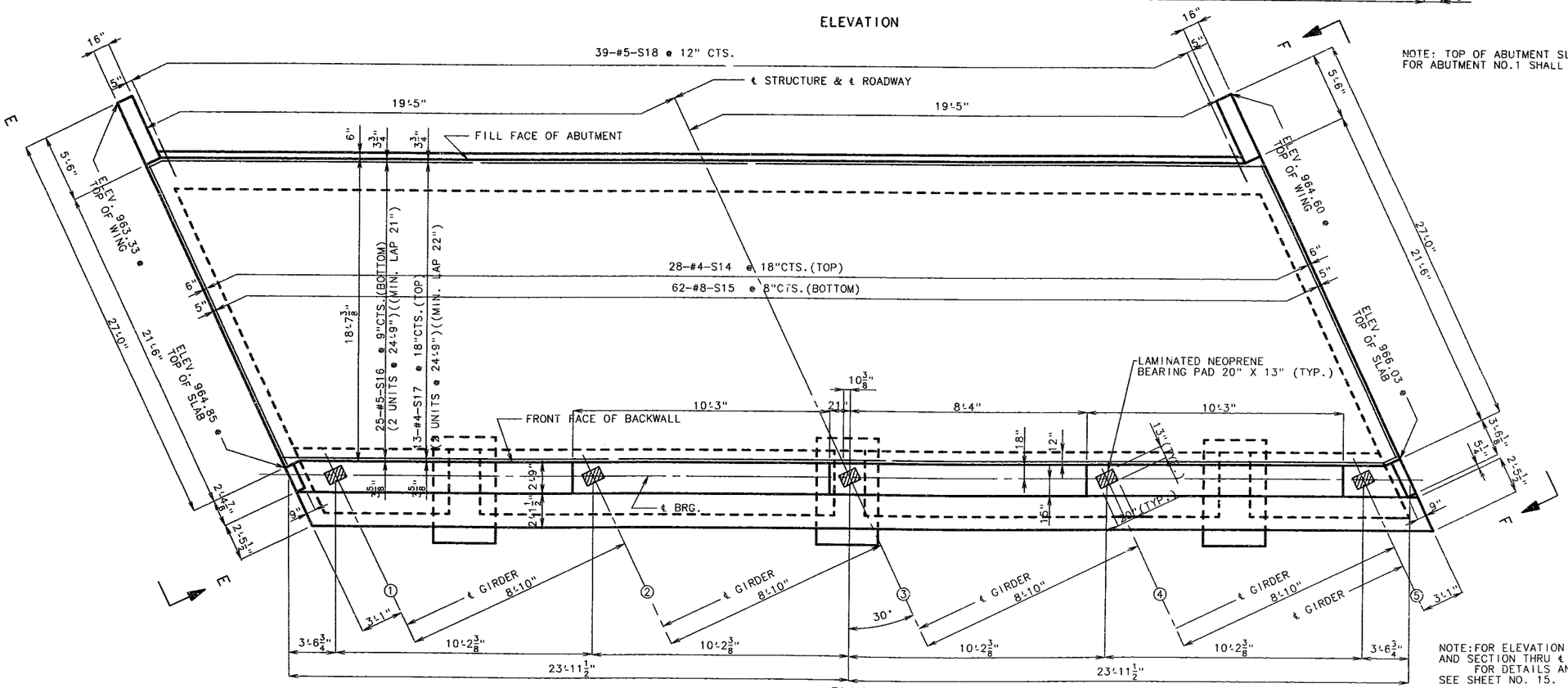

NOTE: TOP OF ABUTMENT SLAB AND EXPANSION DEVICE FOR ABUTMENT NO.1 SHALL CONFORM TO CROWN OF ROADWAY.

NOTE:FOR ELEVATION E-E,ELEVATION F-F, AND SECTION THRU ℄ ROADWAY SEE SHEET NO. 12. FOR DETAILS AND PLAN OF ANCHOR BOLTS SEE SHEET NO. 15.

PLAN

DETAILS OF ABUTMENT NO. 3

DETAILED MAY 1991
CHECKED JULY 1992

NOTE: THIS DRAWING IS NOT TO SCALE. FOLLOW DIMENSIONS.

SHEET NO. 10 OF 33.

JACKSON COUNTY

A-5249

202 148

STATE	PROJ. NO.	SHEET NO.
MO.		183

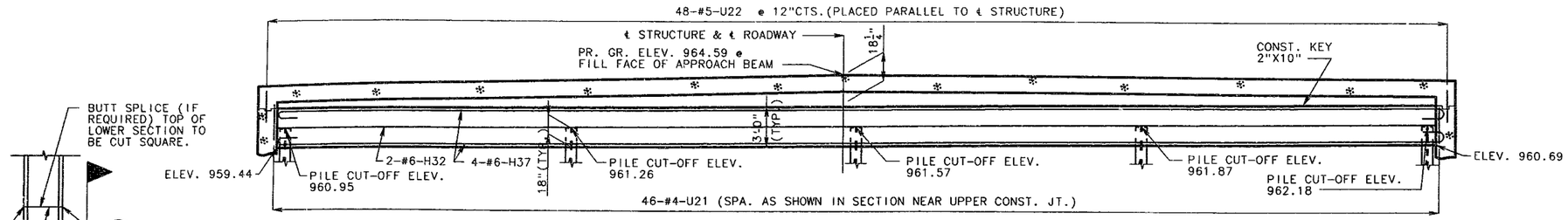

SECTION NEAR APPROACH BEAM

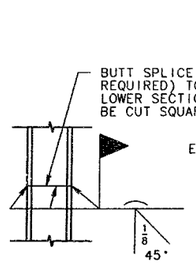

STEEL PILE SPLICE

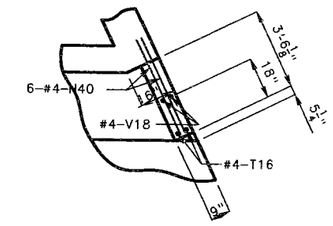

DETAIL "D"

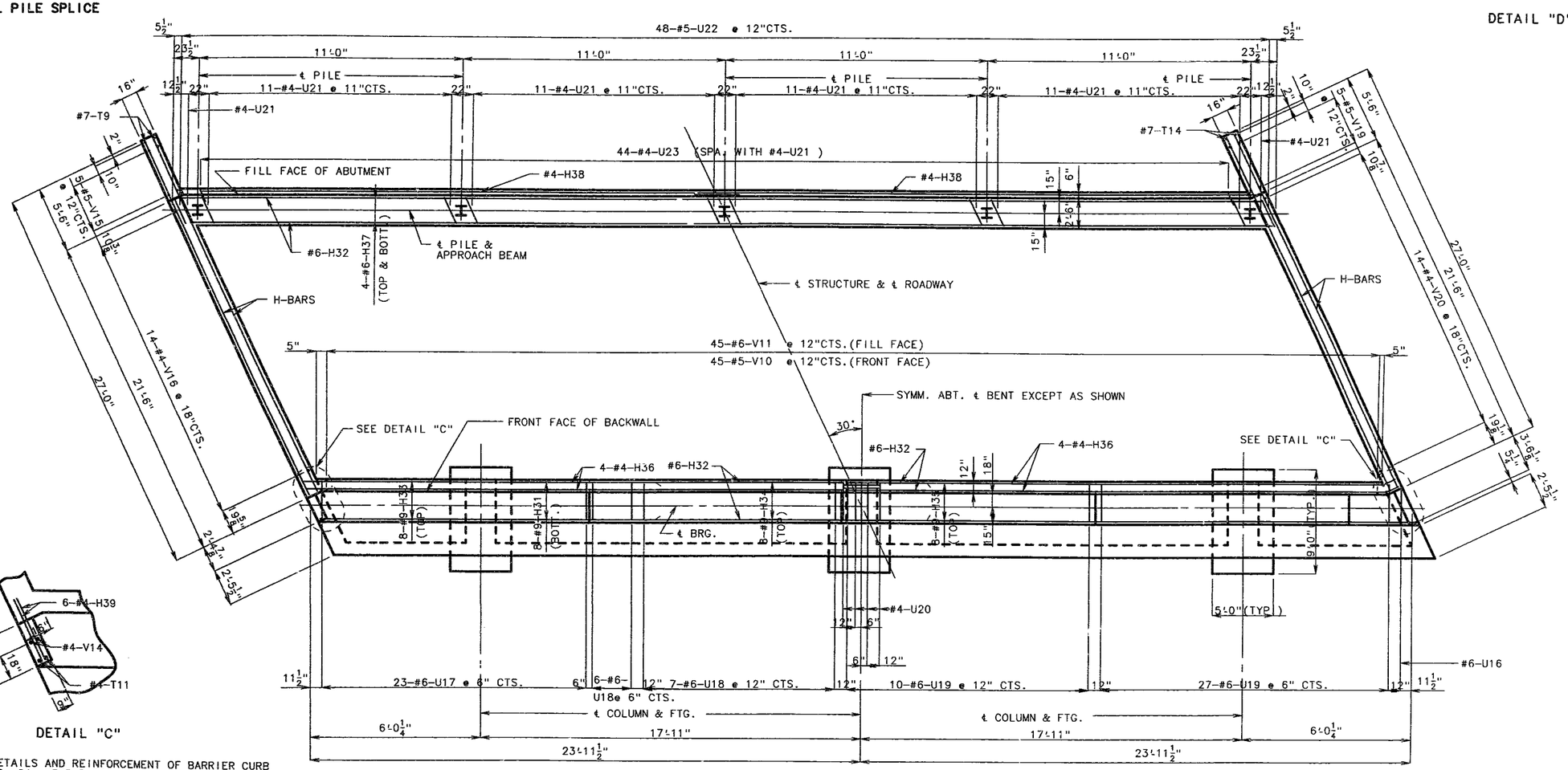

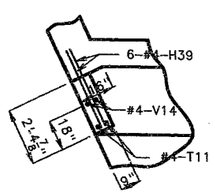

DETAIL "C"

NOTE: FOR DETAILS AND REINFORCEMENT OF BARRIER CURB SEE SHEET NO. 24. #5-R BARS MUST BE IN PLACE BEFORE SLAB IS POURED.

SECTION NEAR UPPER CONSTRUCTION JOINT

DETAILS OF ABUTMENT NO. 3

DETAILED MAY. 1992
CHECKED JULY 1992

NOTE: THIS DRAWING IS NOT TO SCALE FOLLOW DIMENSIONS.

SHEET NO. 11 OF 33. JACKSON COUNTY A-5249

398/99

STATE	PROJ. NO.	SHEET NO.
MO.		184

NOTE: FOR DETAILS AND REINFORCEMENT OF BARRIER CURB SEE SHEET NO. 24. #5-R BARS MUST BE PLACED BEFORE SLAB IS POURED.

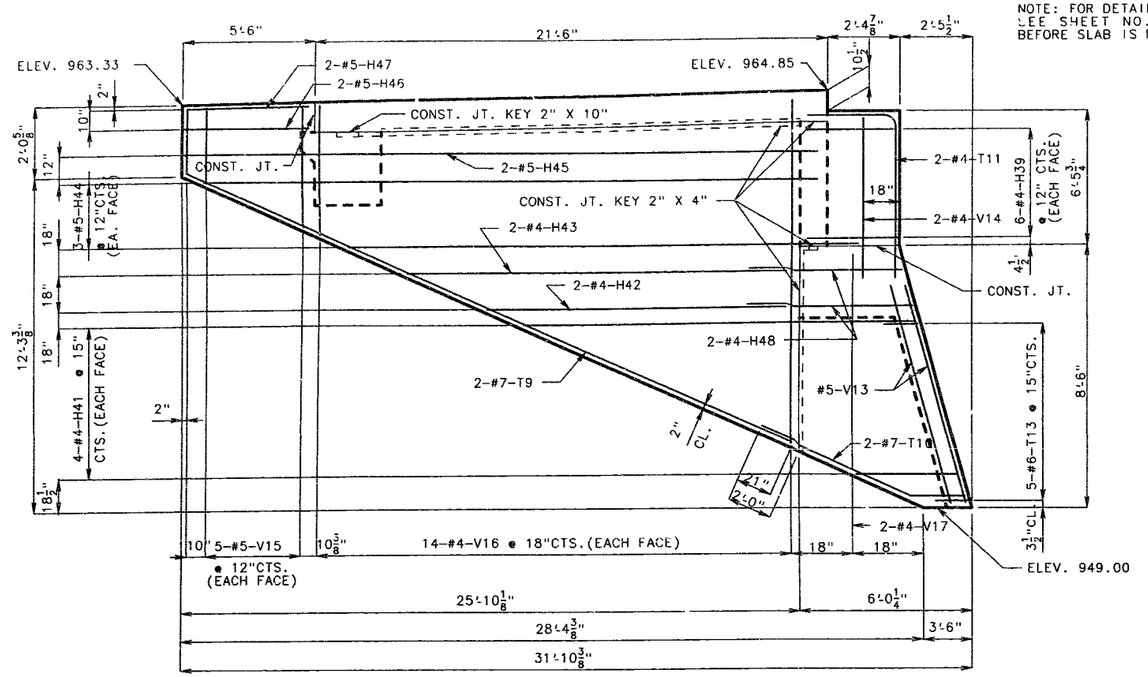

ELEVATION E-E

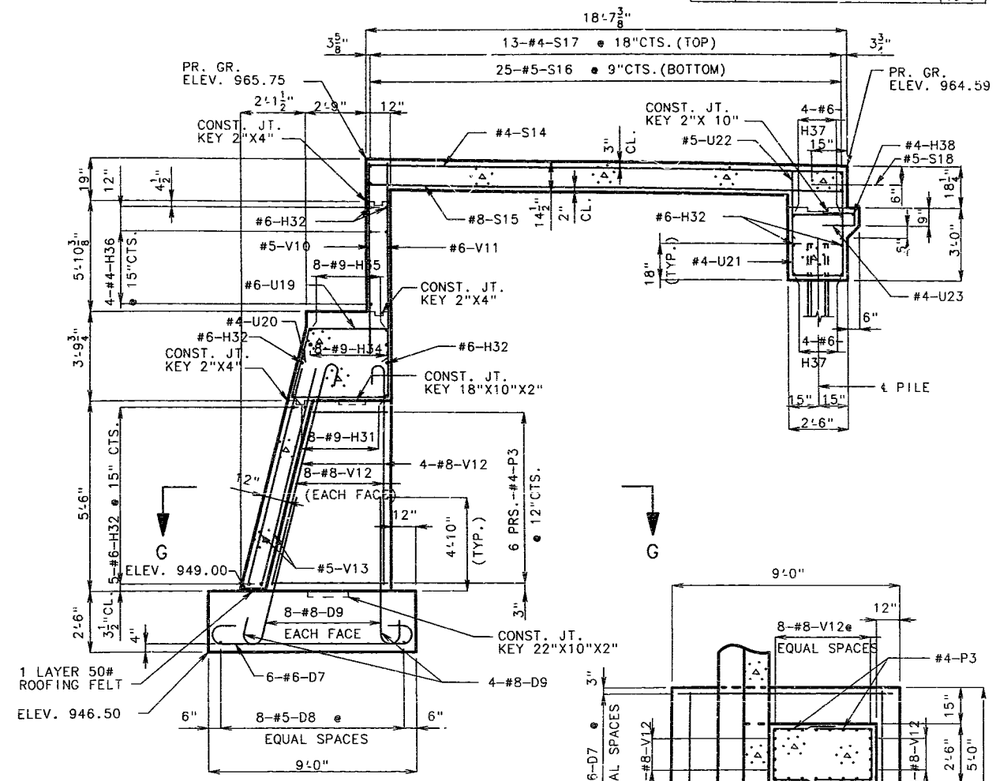

SECTION THRU ℄ ROADWAY (NORMAL TO BENT)

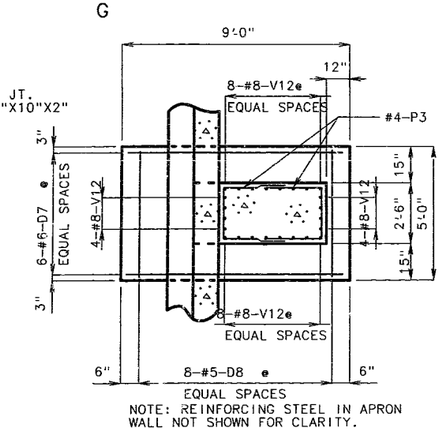

SECTION G-G

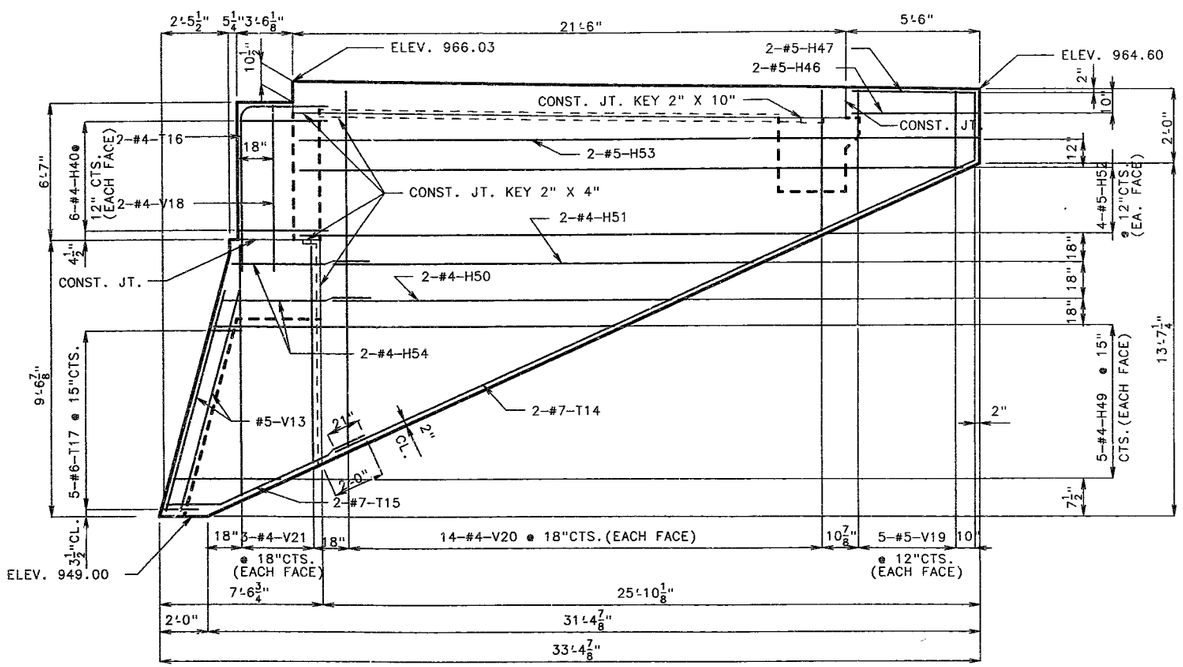

ELEVATION F-F

NOTE: FOR LOCATION OF ELEVATIONS E-E & F-F SEE SHEET NO. 10.

SUBSTRUCTURE QUANTITY TABLE FOR BENT NO. 3

ITEM		QUANTITY
CLASS 1 EXCAVATION	CU. YD.	100
STRUCTURAL STEEL PILE(10")	LIN. FT.	55
PRE-BORE FOR PILING	LIN. FT.	45
CLASS B CONCRETE (SUBSTRUCTURE)	CU. YD.	98.7
REINFORCING STEEL (BRIDGES)	LBS.	13020
REINFORCING STEEL (EPOXY COATED)	LBS.	1100

NOTE: WORK THIS TABLE WITH ESTIMATED QUANTITIES AS SHOWN ON SHEET NO. 4.

DETAILS OF ABUTMENT NO. 3

DETAILED MAY 1992
CHECKED JULY 1992

NOTE: THIS DRAWING IS NOT TO SCALE. FOLLOW DIMENSIONS.

JACKSON COUNTY

A-5249

184

STATE	PROJ NO	SHEET NO
MO		185

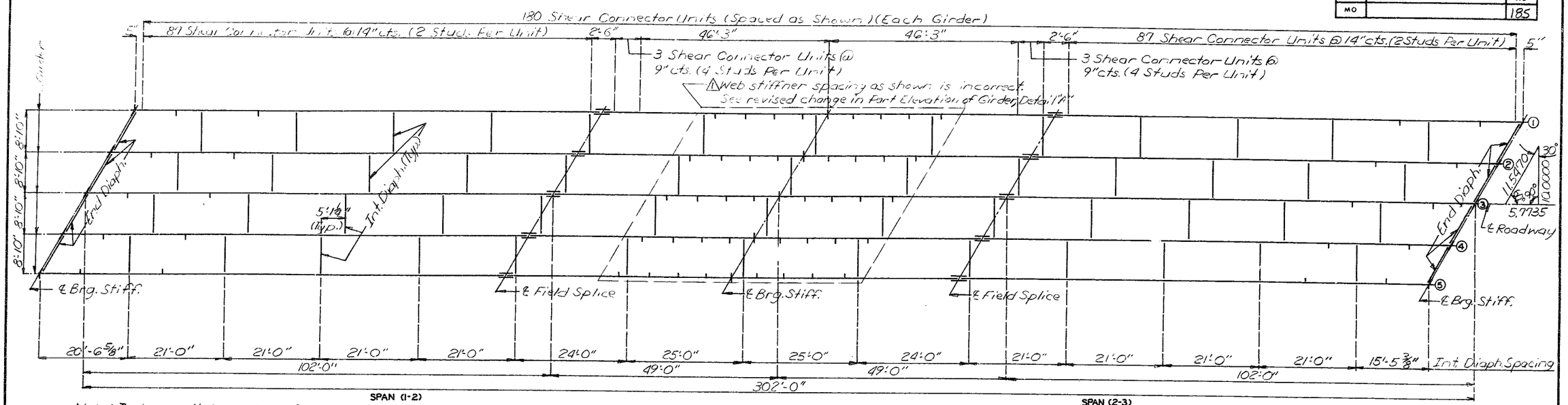

PLAN OF STRUCTURAL STEEL

Note: Intermediate web stiffener plate and diaphragm spacing may vary from plan dimensions by a maximum of 3" for diaphragm to connect to the intermediate web stiffener plate.
For details of shear connectors, see sheet No. 14.

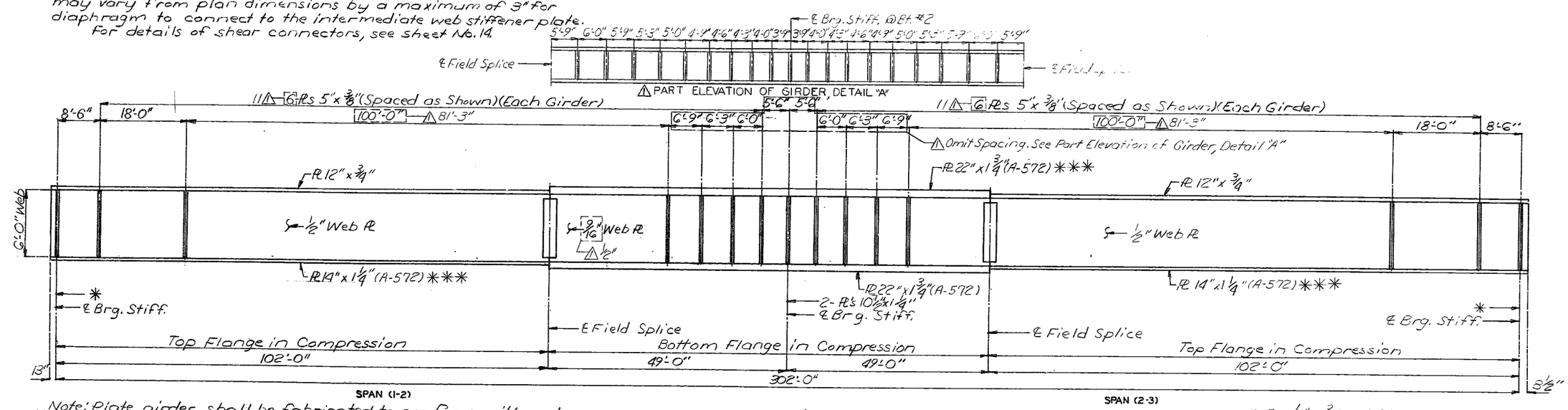

ELEVATION OF GIRDER

Note: Plate girder shall be fabricated to conform with camber diagram shown on sheet 20.
All web plates are subject to notch toughness requirements.
Fabricated Structural Steel shall be A-36 except as shown.
Longitudinal dimensions are horizontal from ℄ Brg. to ℄ Brg. See Part-Longitudinal Sections on sheet No. 15.
Transverse web stiffeners shall be located as shown in Plan of Structural Steel.

* Pl 6½" x ¾" (Outside Exterior Gdrs.)
Pl 7½" x ¾" (Inside Exterior Gdrs. and Both Sides of Interior Gdrs.)

*** Indicates flange plates subject to notch toughness requirements.

DETAILED JUN. 1992
CHECKED July 1992

Note: This drawing is not to scale. Follow dimensions.

Revised 8/15/94

Sheet No. 13 of 33.

JACKSON COUNTY

A-5249

240151

STATE	PROJ. NO.	SHEET NO.
MO.		186

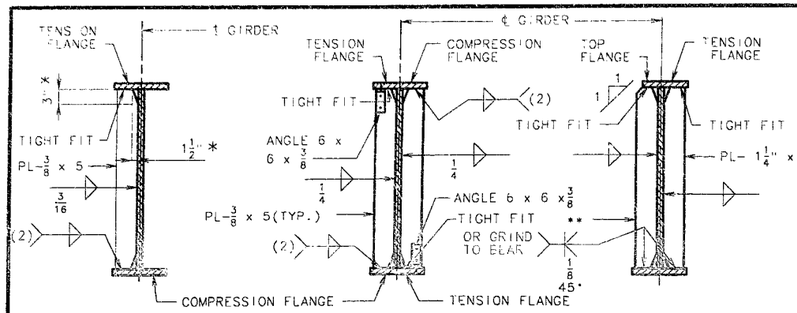

INT. WEB STIFF. (ONE SIDE ONLY) | INT. DIAPH. CONN. PLATE | END BRG. STIFF. | INT. BRG. STIFF.

(2) WELD TO COMPRESSION FLANGE AS LOCATED ON ELEVATION OF GIRDER.

* TYPICAL FOR ALL INT. WEB STIFF., INT. DIAPH. CONN. PL. AND BRG. STIFF..

**PL 6 1/2"x3/4"(OUTSIDE EXTERIOR GIRDER)

PL 7 1/2x3/4"(INSIDE EXTERIOR GIRDERS AND BOTH SIDES OF INTERIOR GIRDERS)

WELDING DETAILS

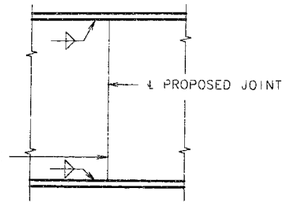

SHOP WEB SPLICE

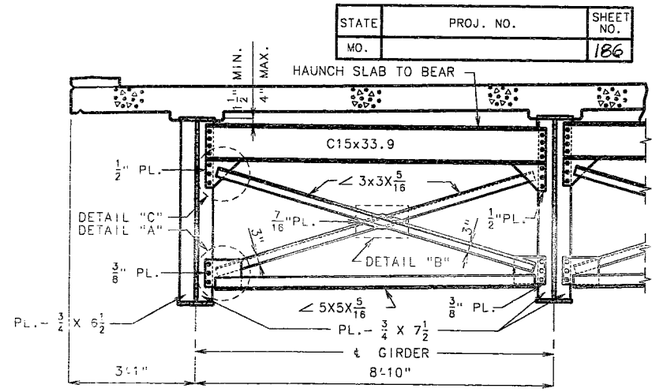

TYPICAL PART SECTION SHOWING END DIAPHRAGMS

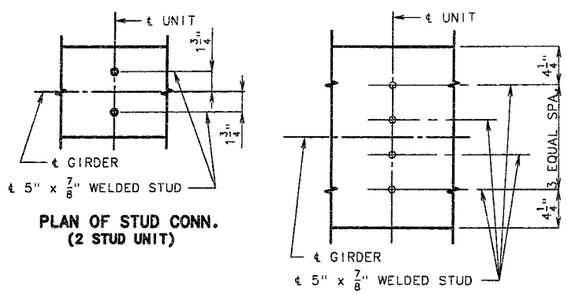

PLAN OF STUD CONN. (2 STUD UNIT)

PLAN OF STUD CONN. (4 STUD UNIT)

NOTE: WEIGHT OF 1823 LBS. OF SHEAR CONNECTORS IS INCLUDED IN WEIGHT OF FABRICATED STRUCTURAL CARBON STEEL.

DETAIL OF SHEAR CONNECTORS

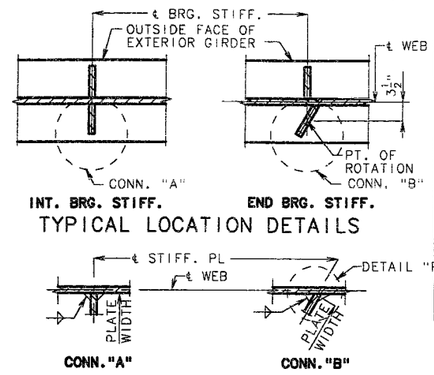

INT. BRG. STIFF. | END BRG. STIFF.

TYPICAL LOCATION DETAILS

CONN."A" | CONN."B"

WELDING DETAILS

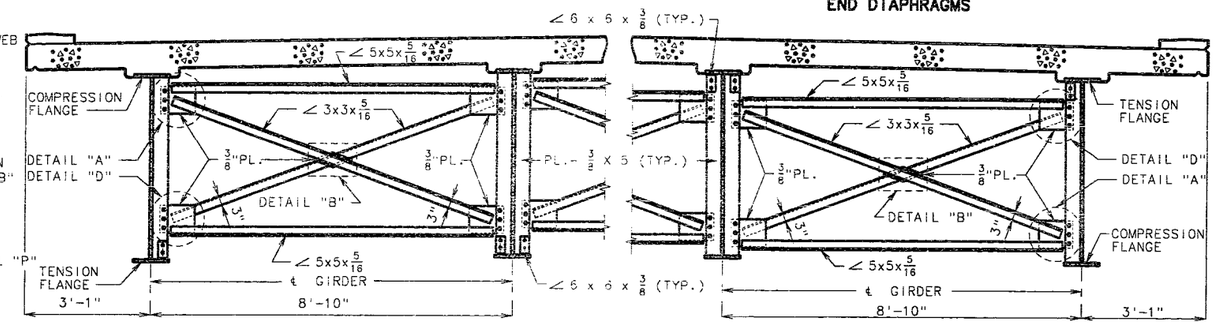

TYPICAL PART SECTION SHOWING INTERMEDIATE DIAPHRAGMS BOTTOM FLANGE IN TENSION

TYPICAL PART SECTION SHOWING INTERMEDIATE DIAPHRAGMS TOP FLANGE IN TENSION

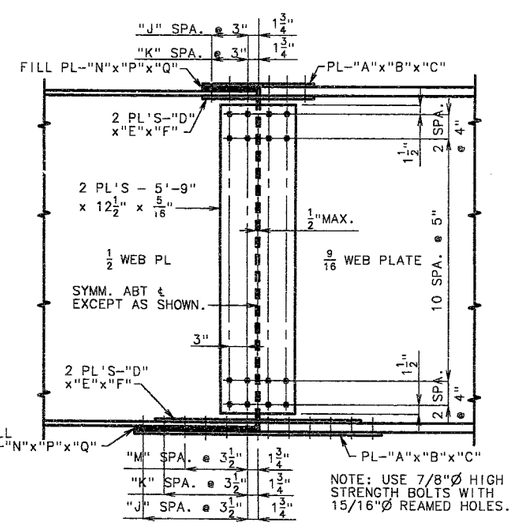

NOTE: USE 7/8"Ø HIGH STRENGTH BOLTS WITH 15/16"Ø REAMED HOLES.

DETAILS OF FIELD SPLICE

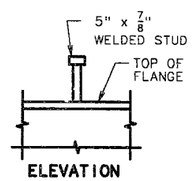

ELEVATION

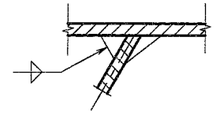

DETAIL "P"

SPLICE LOCATION	TABLE OF DIMENSIONS - FIELD SPLICE											
	"A"	"B"	"C"	"D"	"E"	"F"	"J"	"K"	"M"	"N"	"P"	"Q"
TOP	12"	3/8"	2'-0 1/2"	5"	1/2"	2'-0 1/2"	3	3	-	12"	1"	12"
BOTT	14"	1 1/8"	3'-5 1/2"	6"	1 1/8"	2'-10 1/2"	5	4	2	14"	1/2"	20 1/2"

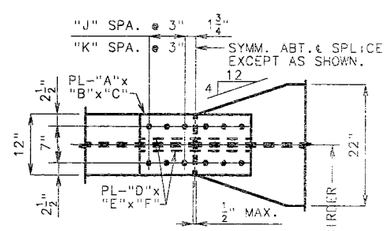

TOP

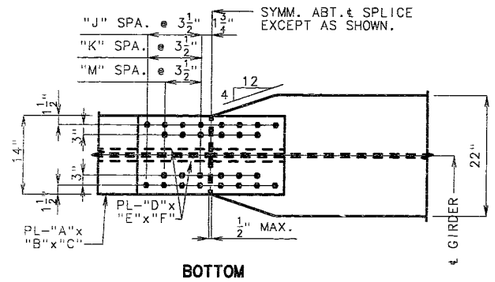

BOTTOM

PLAN OF FLANGES

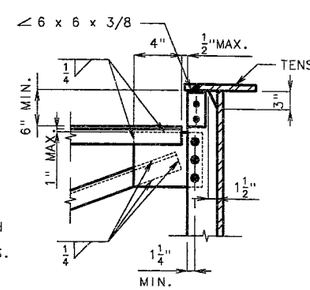

DETAIL "D"

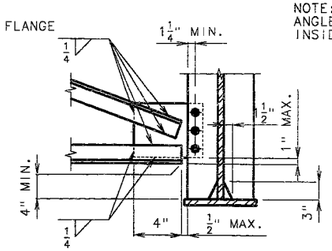

DETAIL "A"

NOTE: THE TWO 3/4"Ø H.S. BOLTS THAT CONNECT THE 6 X 6 X 3/8 ANGLE TO THE TOP FLANGE SHALL BE PLACED SO THE NUT IS ON THE INSIDE OF FLANGE TOWARD THE WEB.

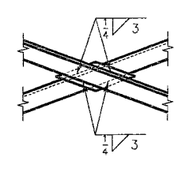

DETAIL "B"

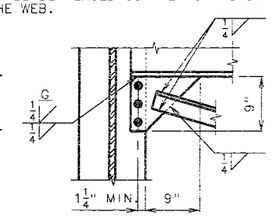

DETAIL "C"

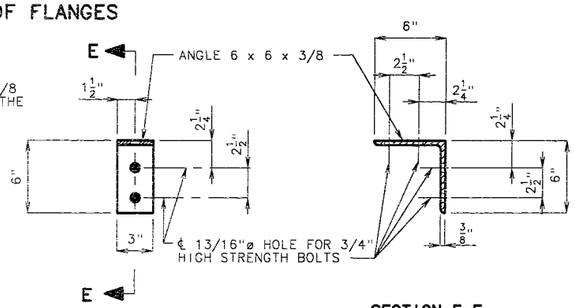

DETAIL OF FLANGE CONNECTION ANGLE

SECTION E-E

DETAILED MAY 1992
CHECKED JULY 1992

NOTE: THIS DRAWING IS NOT TO SCALE. FOLLOW DIMENSIONS.

SHEET NO. 14 OF 33.

JACKSON COUNTY

A-5249

24153

STATE	PROJ. NO.	SHEET NO.
MO.		187

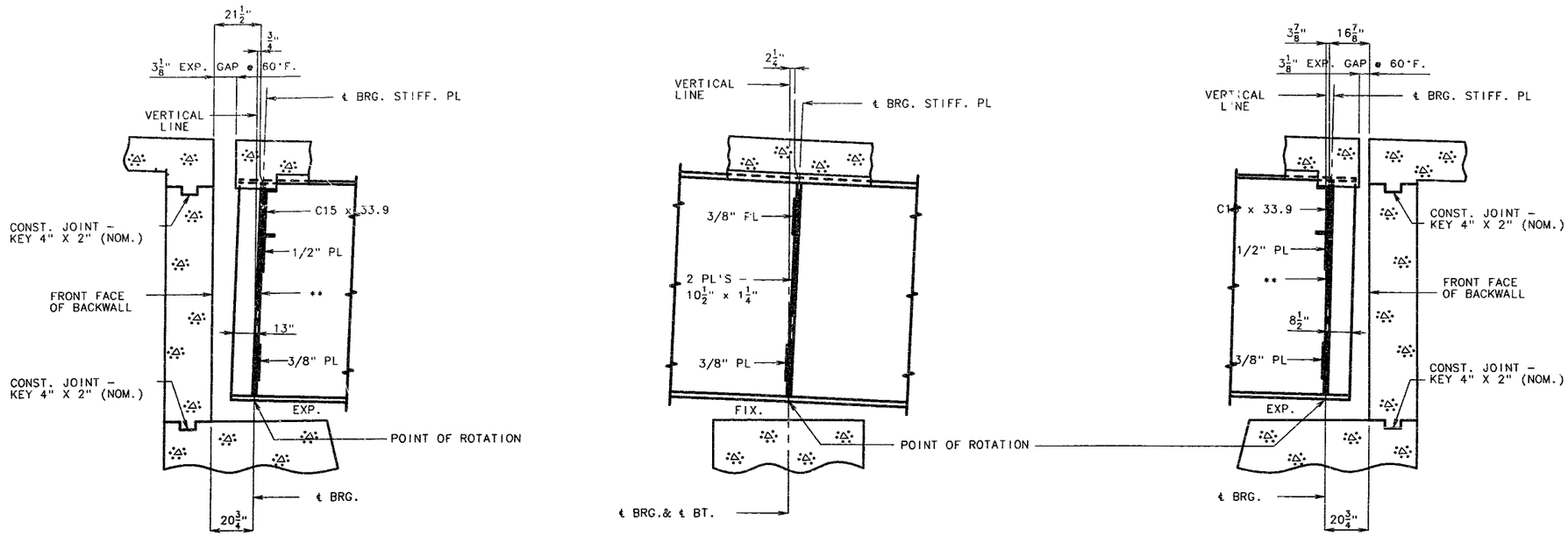

PART LONGITUDINAL SECTION

** PL $6\frac{1}{2}$ X $\frac{3}{4}$ (OUTSIDE EXTERIOR GDRS.)
PL $7\frac{1}{2}$ X $\frac{3}{4}$ (INSIDE EXTERIOR GDRS. AND BOTH SIDES OF INTERIOR GDRS.)

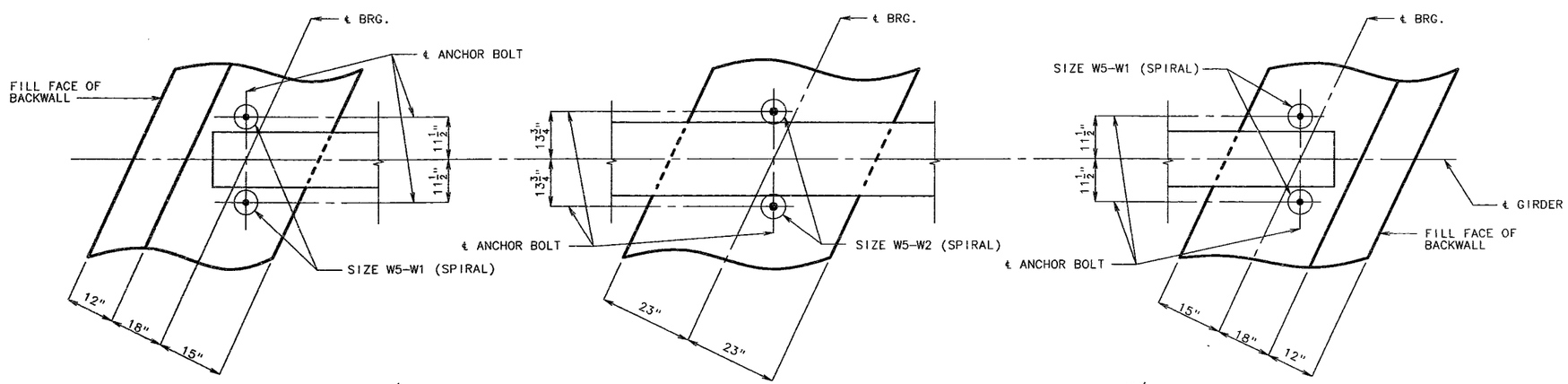

PART ANCHOR BOLT PLAN

* CLEAR TOP REINFORCEMENT (TIE TOP OF SPIRAL TO LONGITUDINAL REINFORCEMENT).

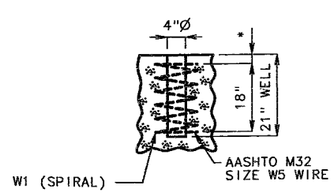

DETAIL OF ANCHOR BOLT WELL AT END ABUTMENTS

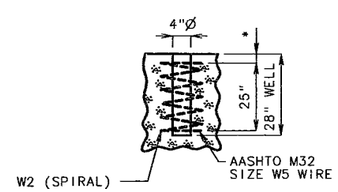

DETAIL OF ANCHOR BOLT WELL AT INT. BT. NO. 2

DETAILED MAY 1992
CHECKED JULY 1992

NOTE: THIS DRAWING IS NOT TO SCALE. FOLLOW DIMENSIONS.

JACKSON COUNTY

A-5249

242 153

STATE	PROJ. NO.	SHEET NO.
MO.		188

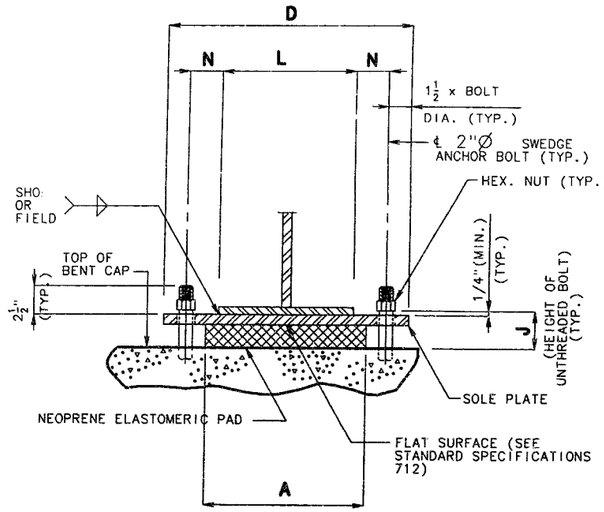

END VIEW

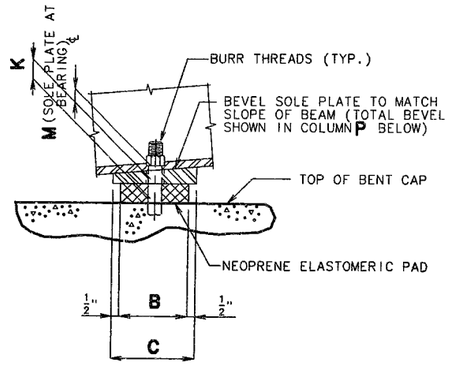

SIDE VIEW

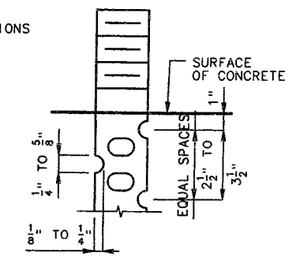

DETAIL FOR ¾"ø THRU 2½"ø ANCHOR BOLTS

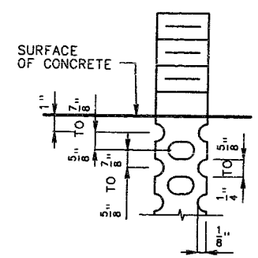

OPTIONAL DETAIL FOR 1⅜"ø THRU 2½"ø ANCHOR BOLTS

SWEDGE ANCHOR BOLT DETAILS

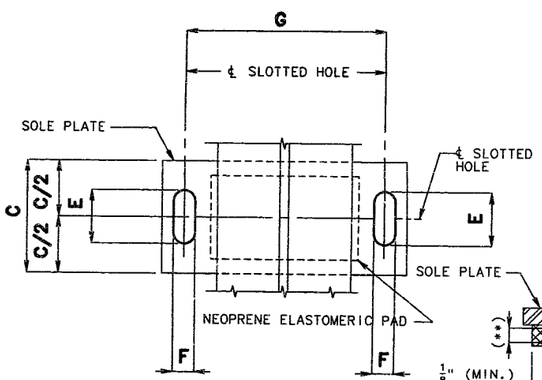

PART PLAN VIEW

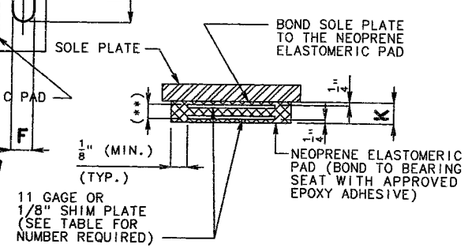

NEOPRENE ELASTOMERIC PAD

(**) LAYERS OF 1/2" ELASTOMER ALTERNATING WITH 11 GAGE OR 1/8" STEEL SHIM PLATE.

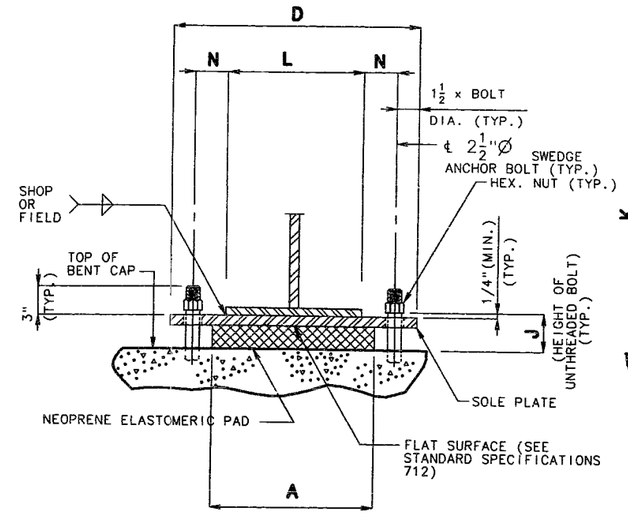

END VIEW

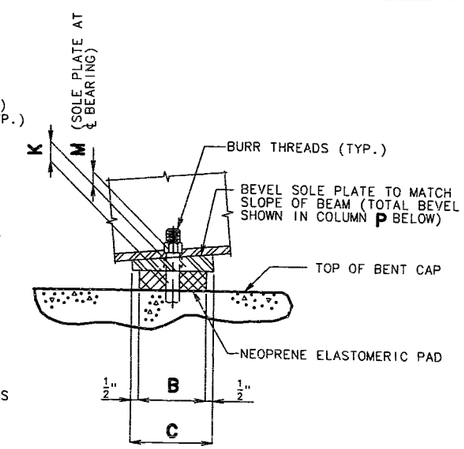

SIDE VIEW

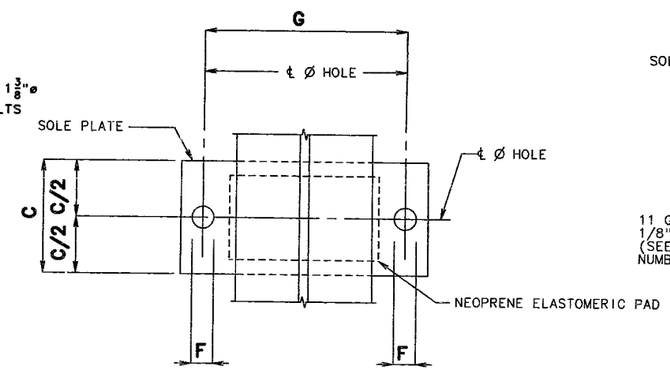

PART PLAN VIEW

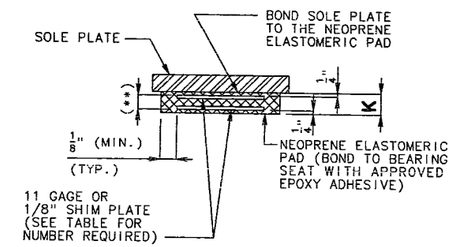

NEOPRENE ELASTOMERIC PAD

(**) LAYERS OF 1/2" ELASTOMER ALTERNATING WITH 11 GAGE OR 1/8" STEEL SHIM PLATE.

GENERAL NOTES:

ANCHOR BOLTS SHALL BE (1) Ø A588 STEEL SWEDGED BOLTS AND SHALL EXTEND (2) INTO THE CONCRETE WITH A194-2, 2H OR A563-C, C3, D, DH, DH3 HEAVY HEXAGON NUTS. ACTUAL MANUFACTURER'S CERTIFIED MILL TEST REPORTS (CHEMICAL AND MECHANICAL) SHALL BE PROVIDED. (SWEDGING SHALL BE 1" LESS THAN THE EXTENSION INTO THE CONCRETE.)

ALL STRUCTURAL STEEL FOR THE SOLE PLATE, ANCHOR BOLTS AND THE HEAVY HEXAGON NUTS SHALL BE PAINTED WITH 2 COATS (5 MILS MIN.) OF INORGANIC ZINC. WELD AREAS TO BE TOUCHED UP AFTER ASSEMBLY.

THE NEOPRENE ELASTOMERIC PADS SHALL BE 60 DUROMETER.

THE SOLE PLATE SHALL BE FURNISHED WITH THE BEARING AND FIELD OR SHOP WELDED TO THE GIRDERS.

STRUCTURAL STEEL FOR THE SOLE PLATE SHALL BE A-36.

PAYMENT FOR THE SOLE PLATE, ANCHOR BOLTS AND HEAVY HEXAGON NUTS SHALL BE INCLUDED IN THE COST OF THE BEARING ASSEMBLY. SEE SPECIAL PROVISIONS.

THE ACCEPTED QUANTITY OF THE ELASTOMERIC BEARING ASSEMBLIES, COMPLETE-IN-PLACE, WILL BE PAID FOR AT THE CONTRACT UNIT PRICE FOR LAMINATED NEOPRENE BEARING PADS (STEEL STRUCTURES), EACH.

(1) 2" ø BENT #1 & #3
2½" ø BENT #2

(2) 18" ø BENT #1 & #3
24" ø BENT #2

EXPANSION BEARINGS

BENT NO.	A	B	C	D	E	F	G	J	K	L	M	N	P	NUMBER OF SHIM PLATES(*)	NUMBER REQUIRED
1	20"	13"	14"	2'-5"	5"	2⅛"	23"	6⅛"	4⅜"	14"	1½"	4½"	⅛"	7	5
3	20"	13"	14"	2'-5"	5"	2⅛"	23"	6⅛"	4⅜"	14"	1½"	4½"	¾"	7	5
														TOTAL BEARINGS	10

(*) THE REQUIRED SHIM PLATE SHALL BE PLACED BETWEEN LAYERS OF ELASTOMER AND MOLDED TOGETHER TO FORM AN INTEGRAL UNIT.

FIXED BEARINGS

BENT NO.	GDR. NO.	A	B	C	D	F	G	J	K	L	M	N	P	NUMBER OF SHIM PLATES(*)	NUMBER REQUIRED
2	1,2,3&5	21"	2'-10"	2'-11"	2'-11"	2⅝"	2'-3½"	5 9/16"	3¾"	22"	1 9/16"	2¾"	1⅛"	6	4
2	4	21"	2'-10"	2'-11"	2'-11"	2⅝"	2'-3½"	5 15/16"	3¾"	22"	1 15/16"	2¾"	1⅛"	6	1
														TOTAL BEARINGS	5

(*) THE REQUIRED SHIM PLATE SHALL BE PLACED BETWEEN LAYERS OF ELASTOMER AND MOLDED TOGETHER TO FORM AN INTEGRAL UNIT.

BRG LAM .BRG3,31,STL, ,A	REVISED	MAY 1992
	LAMINATED BRG.	JAN. 1980

DETAILED MAY 1992
CHECKED JULY 1992

DETAILS OF LAMINATED NEOPRENE BEARINGS (STEEL STRUCTURES)

NOTE: THIS DRAWING IS NOT TO SCALE. FOLLOW DIMENSIONS.

JACKSON COUNTY

A-5249

843 156

STATE	PROJ. NO.	SHEET NO.
MO.		189

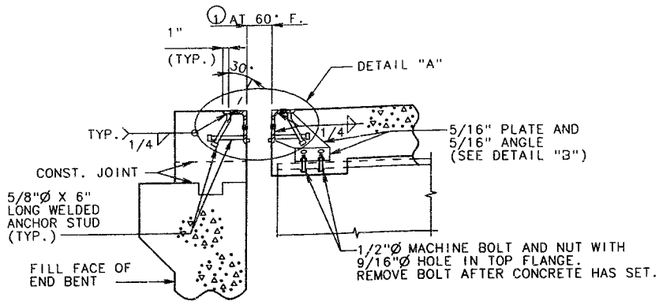

PART SECTION D-D

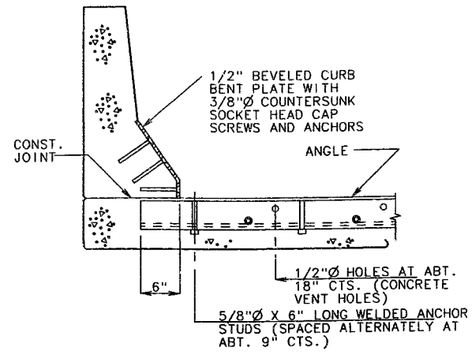

PART SECTION B-B

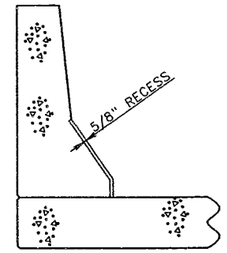

PART SECTION A-A

GENERAL NOTES:

STRUCTURAL STEEL FOR EXPANSION DEVICE SHALL BE FABRICATED IN ONE SECTION, EXCEPT THAT WHEN THE LENGTH IS OVER 50', SPLICING IS PERMISSABLE.

THE EXPANSION DEVICE SHALL BE BENT TO CONFORM TO CROWN AND GRADE OF ROADWAY.

STRUCTURAL STEEL FOR THE ARMORED JOINT SHALL BE GRADE A36.

ANCHORS FOR COMPRESSION SEAL ARMOR SHALL BE APPROVED STUD WELDED ANCHORS (C1010 THRU C1020).

PLAN DIMENSIONS ARE BASED ON INSTALLATION AT 60°F.

DIMENSION ① SHALL BE INCREASED $\frac{1}{8}$" FOR EACH 10° FALL IN TEMPERATURE AND DECREASED $\frac{1}{8}$" FOR EACH 10° RISE IN TEMPERATURE AT INSTALLATION.

SEE SPECIAL PROVISIONS FOR THE REQUIREMENTS OF COMPRESSION JOINT SEAL.

FURNISHING, PAINTING AND INSTALLING THE STRUCTURAL STEEL ARMORED JOINT AND CURB PLATES SHALL BE INCLUDED IN CONTRACT UNIT PRICE FOR PREFORMED COMPRESSION JOINT SEAL.

NEOPRENE EXTRUSIONS SHALL MEET A.S.T.M. D3542-83.

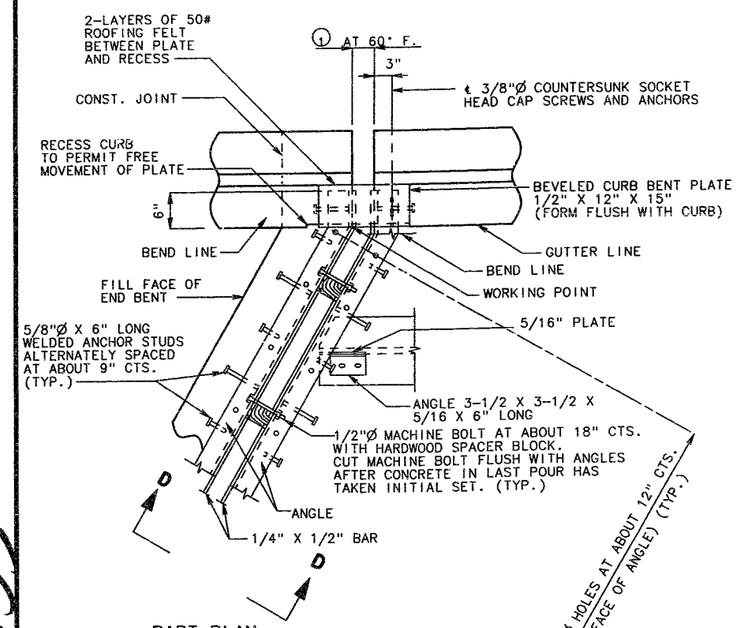

PART PLAN

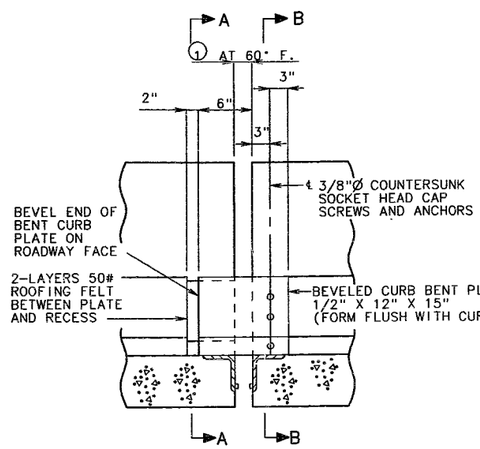

PART ELEVATION OF BARRIER CURB

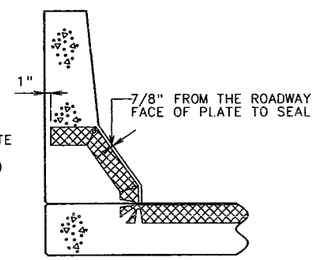

PART SECTION THRU JOINT SEAL

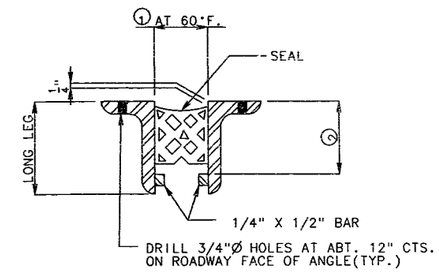

PART CROSS SECTION THRU EXPANSION JOINT

TABLE OF TRANSVERSE BRIDGE SEAL DIMENSIONS				
	SEAL (WIDTH)	①	②	REQUIRED MOVEMENT RANGE
	2.5"	1-5/8"	SEAL DEPTH + 3/4"	0.9"
	3.0"	1-7/8"	SEAL DEPTH + 3/4"	1.0"
	3.5"	2-1/4"	SEAL DEPTH + 3/4"	1.3"
	4.0"	2-5/8"	SEAL DEPTH + 3/4"	1.6"
BT.#1&BT.#3	4.5"	2-3/4"	SEAL DEPTH + 3/4"	1.9"
	5.0"	2-7/8"	SEAL DEPTH + 3/4"	2.0"

NOTE: DEPTH OF SEAL SHALL NOT BE LESS THAN WIDTH OF SEAL.

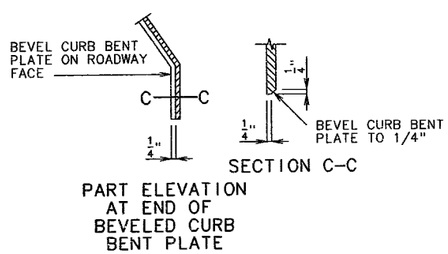

PART ELEVATION AT END OF BEVELED CURB BENT PLATE

SECTION C-C

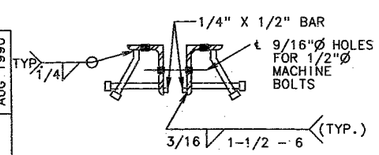

DETAIL "A"

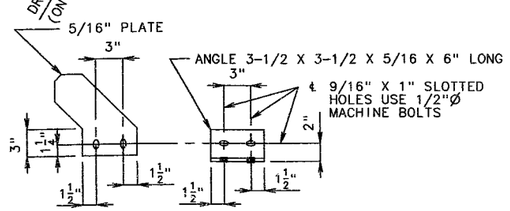

DETAIL "B"

SIZE OF ARMOR JOINT

VERTICAL LEG OF ANGLE SHALL BE A MINIMUM OF DEPTH OF SEAL + 1-1/2". HORIZONTAL LEG OF ANGLE SHALL BE A MINIMUM OF 3". MINIMUM THICKNESS OF ANGLE SHALL BE 1/2"..

IF A SEAL SIZE LARGER THAN THAT INDICATED ON THE PLANS IS USED, THE MOVEMENT RANGE, THE OPENING AT 60° AND ALL DIMENSIONS FOR THE ARMOR ANGLES SHALL BE SHOWN ON THE SHOP DRAWINGS.

DETAILS OF PREFORMED COMPRESSION JOINT SEAL AT BENT NO. 1 & 3

PCJS-STL EB-LA	REVISED
OCT. 1973	AUG 1990

DETAILED MAY 1992
CHECKED JULY 1992

NOTE: THIS DRAWING IS NOT TO SCALE. FOLLOW DIMENSIONS.

JACKSON COUNTY

A-5249

244 155

STATE	PROJ. NO.	SHEET NO.
MO.		190

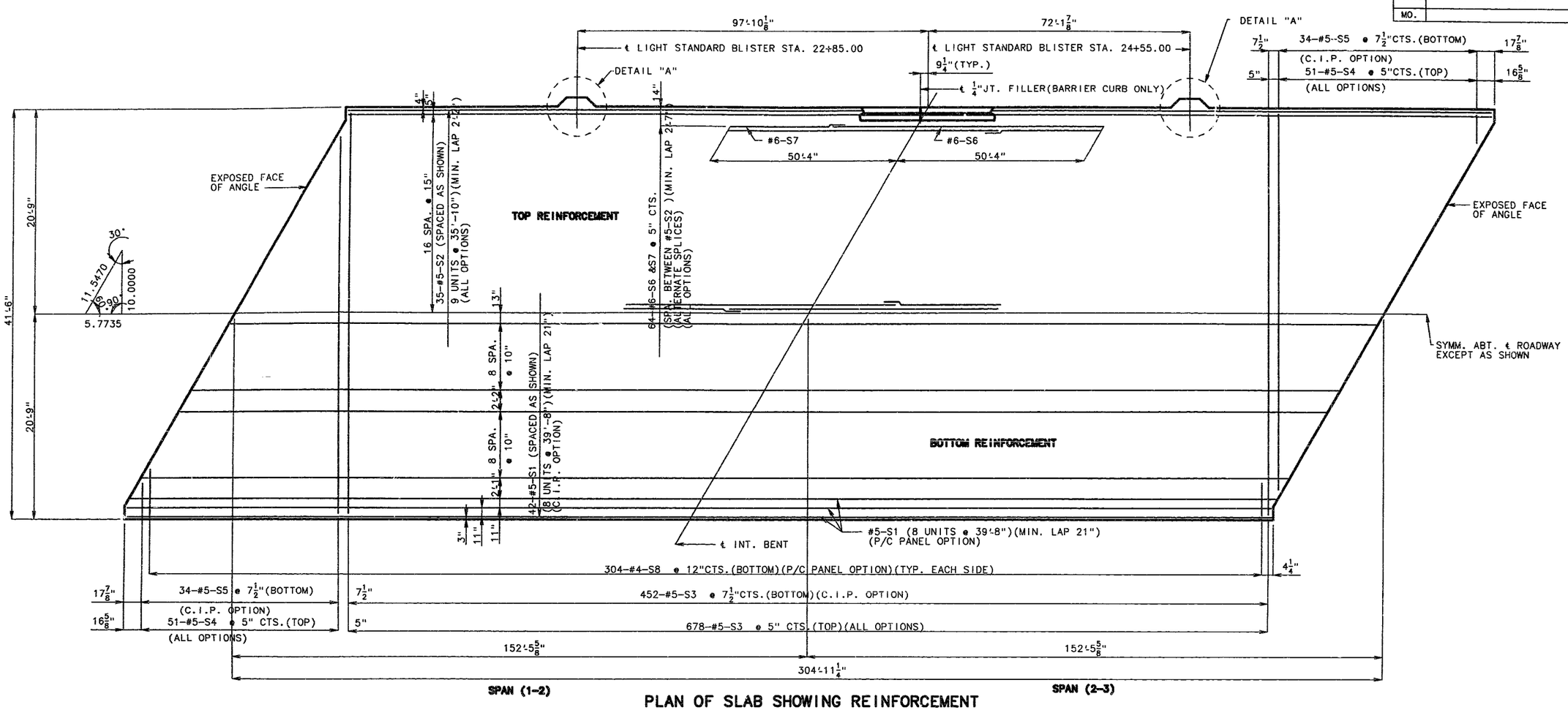

PLAN OF SLAB SHOWING REINFORCEMENT

NOTE: LONGITUDINAL DIMENSIONS SHOWN ARE HORIZONTAL.
FOR DETAILS OF SLAB DRAINS SEE SHEET NO. 21.
FOR DETAILS OF P/C PANEL OPTION SHOWN SEE SHEET NO. 19.
FOR SLAB POURING SEQUENCE SEE SHEET NO. 20.
FOR SLAB HAUNCHING DIAGRAM SEE SHEET NO. 20.
FOR DETAILS OF CONDUIT SYSEM SEE SHEET NO. 22.
LONGITUDINAL REINFORCING STEEL SHALL BE PLACED SO THAT ENDS SHALL NOT BE MORE THAN 1"± FROM VERTICAL LEG OF ANGLE AT EXPANSION DEVICE.

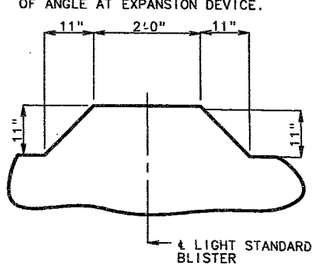

DETAIL "A"

NOTE: FOR REINFORCEMENT IN LIGHT STANDARD BLISTER SEE SHEET NO. 23.

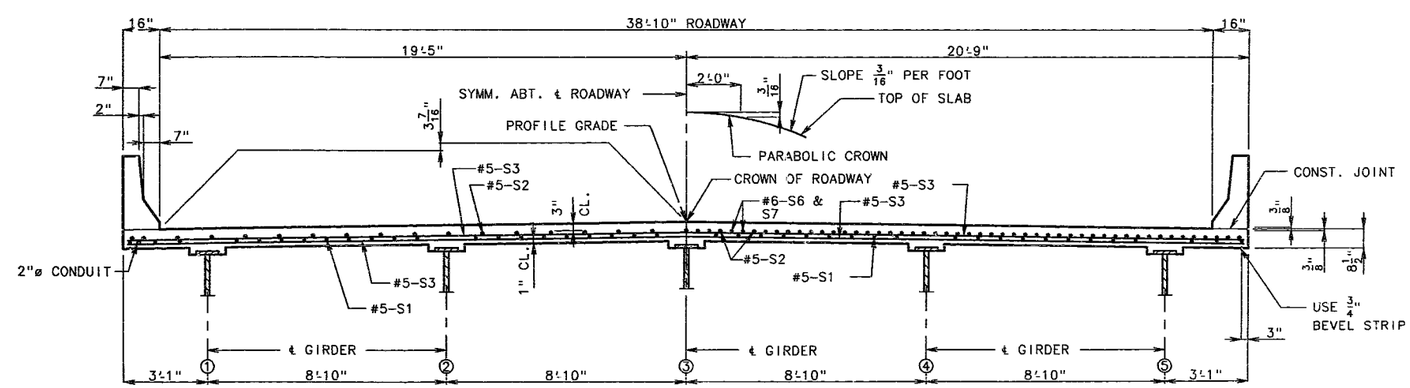

REVISED	JAN. 1981	JUNE 1991

DETAILED MAY 1992
CHECKED JULY 1992

NOTE: FOR DETAILS AND REINFORCEMENT OF SAFETY BARRIER CURB NOT SHOWN SEE SHEET NO. 23.
NOTE: THIS DRAWING IS NOT TO SCALE. FOLLOW DIMENSIONS.

(C.I.P. OPTION SHOWN)

SHEET NO. 18 OF 33.

JACKSON COUNTY

A-5249

STATE	PROJ. NO.	SHEET NO.
MO.		191

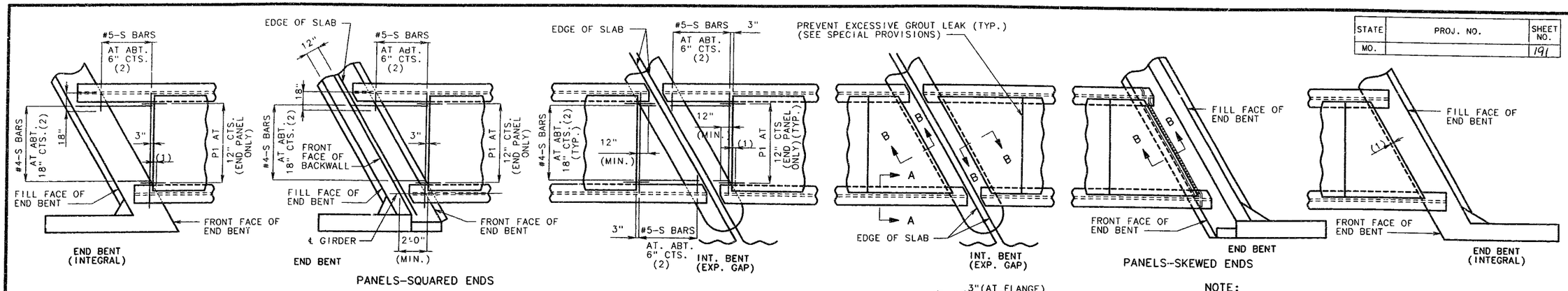

PLAN OF PRECAST PRESTRESSED PANELS PLACEMENT

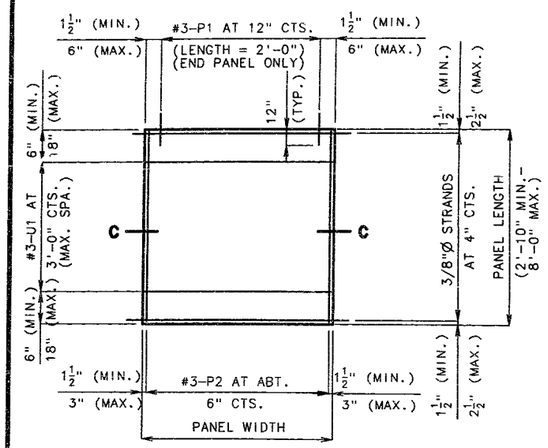

PLAN OF PRECAST PRESTRESSED PANEL

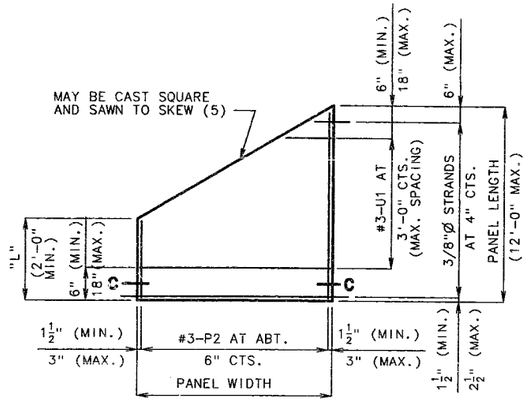

PLAN OF PRECAST PRESTRESSED PANEL (SKEWED END-OPTIONAL)

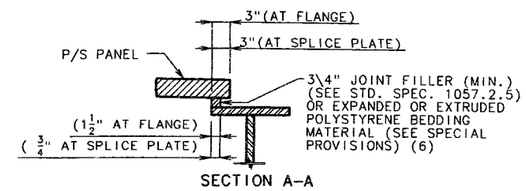

SECTION A-A

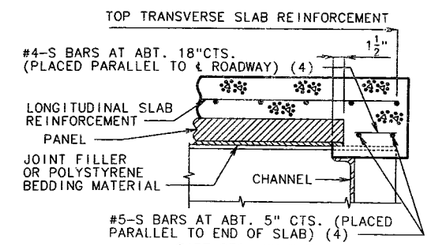

PART SECTION B-B

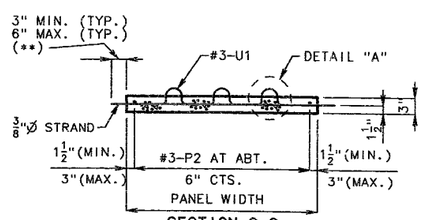

SECTION C-C

(**) PRESTRESSING STRANDS TO EXTEND 6" OR TO WITHIN 1" OF ADJACENT PANEL.

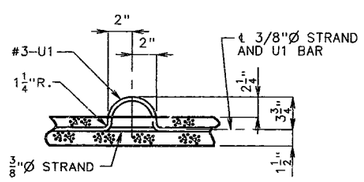

DETAIL "A"

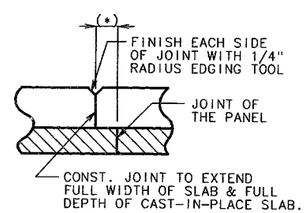

PERMISSIBLE CONST. JOINT

(*) ADJUST THE PERMISSIBLE CONSTRUCTION JOINT TO A CLEARANCE OF 6 INCHES MINIMUM FROM THE JOINTS OF THE PANELS.

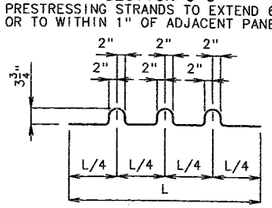

BENDING DIAGRAM FOR U1 BAR

(U1 BARS MAY BE ORIENTED AT RIGHT ANGLES TO LOCATION AND SPACING SHOWN. U1 BARS SHALL BE PLACED BETWEEN P1 BARS).

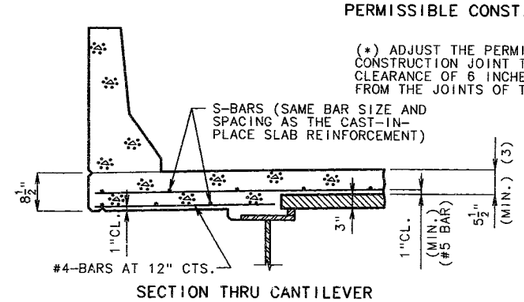

SECTION THRU CANTILEVER

NOTES:

(1) END PANELS TO BE DIMENSIONED 1-1/2 INCHES FROM THE INSIDE FACE OF DIAPHRAGM.

(2) S-BARS SHOWN ARE BOTTOM STEEL IN SLAB BETWEEN PANELS AND USED WITH SQUARED END PANELS ONLY.

COST OF S-BARS SHALL BE INCLUDED IN PRICE BID FOR SLAB PER SQUARE YARD.

S-BARS ARE NOT LISTED IN BILL OF REINFORCING.

SLAB EXTERIOR GIRDER HAUNCH SHALL BE THE SAME AS CAST-IN-PLACE.

(3) ADJUSTMENT IN THE SLAB THICKNESS, JOINT FILLER OR POLYSTYRENE BEDDING MATERIAL THICKNESS, OR GRADE, WILL BE NECESSARY IF THE GIRDER CAMBER AFTER ERECTION DIFFERS FROM PLAN CAMBER BY MORE THAN THE ¼ OF DEAD LOAD DEFLECTION DUE TO THE WEIGHT OF STRUCTURAL STEEL. NO PAYMENT WILL BE MADE FOR ADDITIONAL LABOR OR MATERIALS FOR THE ADJUSTMENT.

(4) S - BARS SHOWN ARE USED WITH SKEWED END PANELS, OR SQUARE END PANELS OF SQUARE STRUCTURES ONLY. THE #5 S - BARS SHALL EXTEND THE WIDTH OF SLAB (21 INCHES LAP IF NECESSARY) OR TO WITHIN 3 INCHES OF EXPANSION DEVICE ASSEMBLIES.

(5) ANY STRAND 2'-0" OR SHORTER SHALL HAVE A #4 REINFORCING BAR ON EACH SIDE OF IT CENTERED BETWEEN STRANDS. STRANDS 2'-0" OR SHORTER MAY THEN BE DEBONDED AT THE FABRICATORS OPTION.

(6) ALL PANEL SUPPORT PADS SHALL BE GLUED TO THE GIRDER. WHEN SUPPORT THICKNESS EXCEEDS 1-1/2", THE PADS SHALL BE GLUED TOP AND BOTTOM. THE GLUE USED SHALL BE THE TYPE RECOMMENDED BY THE PANEL SUPPORT PADS MANUFACTURER.

NOTE:

USE SLAB HAUNCHING DIAGRAM ON SHEET NO. 20 FOR DETERMINING THICKNESS OF JOINT FILLER OR POLYSTYRENE BEDDING MATERIAL WITHIN THE LIMITS NOTED BELOW.

GENERAL NOTES:

PRESTRESSED PANELS:

CONCRETE FOR PRESTRESSED PANELS SHALL BE CLASS A1 WITH F'C = 5,000 PSI, F'CI = 3,500 PSI.

THE TOP SURFACE OF ALL PANELS SHALL RECEIVE A SCORED FINISH WITH A DEPTH OF SCORING OF 1/8 INCH PERPENDICULAR TO THE PRESTRESSING STRANDS IN THE PANELS (SEE SPECIAL PROVISIONS).

PRESTRESSING TENDONS SHALL BE HIGH-TENSILE STRENGTH UNCOATED SEVEN WIRE (7), LOW-RELAXATION STRANDS FOR PRESTRESSED CONCRETE CONFORMING TO AASHTO M203, EXCEPT THAT NOMINAL DIAMETER OF STRAND = 3/8 INCH AND NOMINAL AREA = 0.085 SQ. IN. AND MINIMUM ULTIMATE STRENGTH = 21,250 LBS. (250 KSI). LARGER STRANDS MAY BE USED WITH THE SAME SPACING AND INITIAL TENSION.

INITIAL PRESTRESSING FORCE = 14.9 KIPS/STRAND.

THE METHOD AND SEQUENCE OF RELEASING THE STRANDS SHALL BE SHOWN ON THE SHOP DRAWINGS.

SUITABLE ANCHORAGE DEVICES FOR LIFTING PANELS MAY BE CAST IN PANELS, PROVIDED THEY ARE SHOWN ON THE SHOP DRAWINGS AND APPROVED BY THE ENGINEER. PANEL LENGTHS SHALL BE DETERMINED BY THE CONTRACTOR AND SHOWN ON THE SHOP DRAWINGS.

WHEN SQUARE END PANELS ARE USED AT SKEWED BENTS, IT IS REQUIRED THAT THE SKEWED PORTION BE CAST FULL DEPTH. NO SEPARATE PAYMENT WILL BE MADE FOR THE ADDITIONAL CONCRETE AND REINFORCING REQUIRED.

MINIMUM JOINT FILLER OR POLYSTYRENE BEDDING MATERIAL THICKNESS SHALL BE 3/4 INCH, EXCEPT OVER SPLICE PLATES WHERE MINIMUM THICKNESS SHALL BE 1/4 INCH. WHEN JOINT FILLER OR POLYSTYRENE BEDDING MATERIAL IS LESS THAN 1/2 INCH THICK OVER A SPLICE PLATE, MAKE THE WIDTH OF MATERIAL AT THE SPLICE THE SAME WIDTH AS PANEL ON SPLICE. THICKER MATERIAL MAY BE USED ON ONE OR BOTH SIDES OF THE GIRDER TO REDUCE CAST-IN-PLACE CONCRETE THICKNESS, WITHIN TOLERANCES. NO MORE THAN 2 INCHES TOTAL THICKNESS OF JOINT FILLER OR POLYSTYRENE BEDDING MATERIAL SHALL BE USED.

THE SAME THICKNESS OF JOINT FILLER MATERIAL SHALL BE USED UNDER ANY ONE EDGE OF ANY PANEL EXCEPT AT SPLICES, AND THE MAXIMUM CHANGE IN THICKNESS BETWEEN ADJACENT PANELS SHALL BE 1/4 INCH TO CORRECT FOR VARIATIONS FROM GIRDER CAMBER DIAGRAM. THE POLYSTYRENE BEDDING MATERIAL MAY BE CUT TO MATCH HAUNCH HEIGHT ABOVE TOP OF FLANGE.

SUPPORT FROM DIAPHRAGM FORMS IS REQUIRED UNDER THE OPTIONAL SKEWED END UNTIL CAST-IN-PLACE CONCRETE HAS REACHED 3,000 PSI COMPRESSIVE STRENGTH.

REINFORCING STEEL:

ALL DIMENSIONS ARE OUT TO OUT.

MINIMUM CLEARANCE TO REINFORCING STEEL SHALL BE 1-1/2 INCH, UNLESS OTHERWISE SHOWN.

HOOKS AND BENDS SHALL BE IN ACCORDANCE WITH THE C.R.S.I. MANUAL OF STANDARD PRACTICE FOR DETAILING REINFORCED CONCRETE STRUCTURES, STIRRUP AND TIE DIMENSIONS.

ACTUAL LENGTHS ARE MEASURED ALONG CENTERLINE OF BAR TO THE NEAREST INCH.

THE PRESTRESSED PANEL QUANTITIES ARE NOT INCLUDED IN THE TABLE OF ESTIMATED QUANTITIES FOR ALTERNATE SLABS.

IF U1 BARS INTERFERE WITH PLACEMENT OF SLAB STEEL, U1 LOOPS MAY BE BENT OVER, AS NECESSARY, TO CLEAR SLAB STEEL.

WELDED WIRE FABRIC OR WELDED DEFORMED BAR MATS PROVIDING A MINIMUM AREA OF REINFORCING PERPENDICULAR TO STRANDS OF 0.22 SQ. IN./FT., WITH SPACING PARALLEL TO STRANDS SUFFICIENT TO INSURE PROPER HANDLING, MAY BE USED IN LIEU OF THE #3-P2 BARS SHOWN. WIRE OR BAR DIAMETER SHALL NOT BE LARGER THAN 0.375 INCHES.

THE REINFORCING STEEL SHALL BE TIED SECURELY TO THE 3/8"Ø STRANDS WITH THE FOLLOWING MAXIMUM SPACING IN EACH DIRECTION:
#3-P2 BARS AT 16 INCHES.
WELDED WIRE FABRIC OR WELDED DEFORMED BAR MATS AT 24 INCHES.

TIE THE #3-U1 BARS TO THE #3-P2 BARS, TO THE WELDED WIRE FABRIC OR THE WELDED DEFORMED BAR MATS AT ABOUT 36 INCH CENTERS.

ALL REINFORCEMENT OTHER THAN PRESTRESSING STRANDS SHALL BE EPOXY COATED.

S.PAN 3x/65 3-0 STL.	3" PANEL (STEEL)	MAY 1985	REVISED:	MARCH 1992

DETAILED MAY 1992
CHECKED JULY 1992

NOTE: THIS DRAWING IS NOT TO SCALE. FOLLOW DIMENSIONS.

DETAILS OF PRECAST PRESTRESSED PANELS

JACKSON COUNTY A-5249

STATE	PROJ. NO.	SHEET NO.
MO.		192

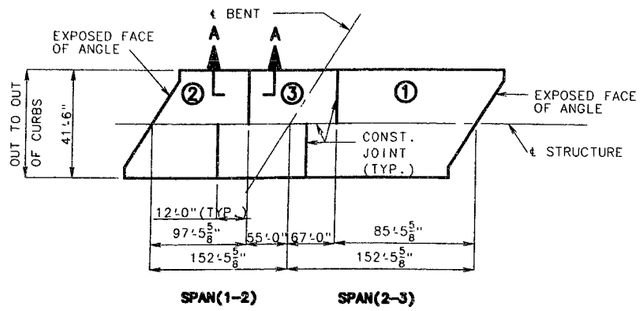

SLAB POURING SEQUENCE

	SEQUENCE OF POURS			MINIMUM RATE OF POUR (CUBIC YARDS PER HOUR)	
				WITH RETARDER	NO RETARDER
BASIC SEQUENCE	1	2	3	25	25
	EITHER DIRECTION				
ALTERNATE POURS TO THE BASIC SKIP SEQUENCE ARE SUBJECT TO THE APPROVAL OF THE ENGINEER IN ACCORDANCE WITH SECTION 703.3.12.4 OF MISSOURI STANDARD SPECIFICATIONS.					
ALTERNATE "A" POURS	1	3 + 2		40	66
	END TO 3	1 TO END			
ALTERNATE "B" POURS	1 + 3 + 2			40	66
	END TO END				

THE CONTRACTOR SHALL POUR AND SATISFACTORILY FINISH THE SLAB POURS AT THE RATE GIVEN ABOVE. RETARDER, IF USED, SHALL BE AN APPROVED TYPE AND RETARD THE SET OF CONCRETE TO 2.5 HOURS.

IF THE PRECAST PRESTRESSED PANEL OPTION IS USED, THE VALUES SHOWN FOR THE MINIMUM RATE OF POUR MAY BE REDUCED BY 25%. HOWEVER, IN NO CASE SHALL THE MINIMUM RATE OF POUR BE LESS THAN 25 CU. YDS PER HOUR.

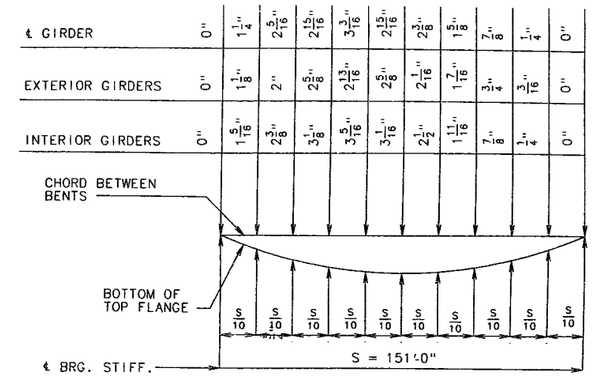

DEAD LOAD DEFLECTION

NOTE: ALL LONGITUDINAL DIMENSIONS ARE HORIZONTAL FROM ℄ BRG. TO ℄ BRG.

NOTE: * OF DEAD LOAD DEFLECTION IS DUE TO WEIGHT OF STRUCTURAL STEEL.

* 20% (GDR. #2, #3, & #4)
24% (GDR. #1 & #5)

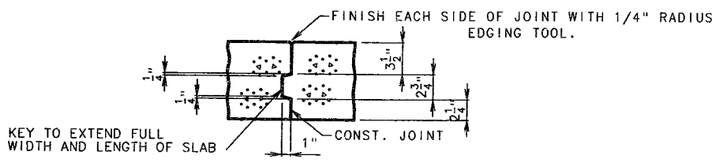

SECTION A-A

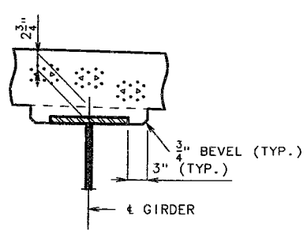

THEORETICAL SLAB HAUNCH

NOTE: HAUNCH DIMENSION MAY VARY IF THE GIRDER CAMBER AFTER ERECTION DIFFERS FROM PLAN CAMBER BY MORE THAN THE % OF D. L. DEFLECTION DUE TO THE WEIGHT OF STRUCTURAL STEEL. NO PAYMENT WILL BE MADE FOR ADDITIONAL FORMING OR CONCRETE REQUIRED FOR VARIATION IN HAUNCHING.

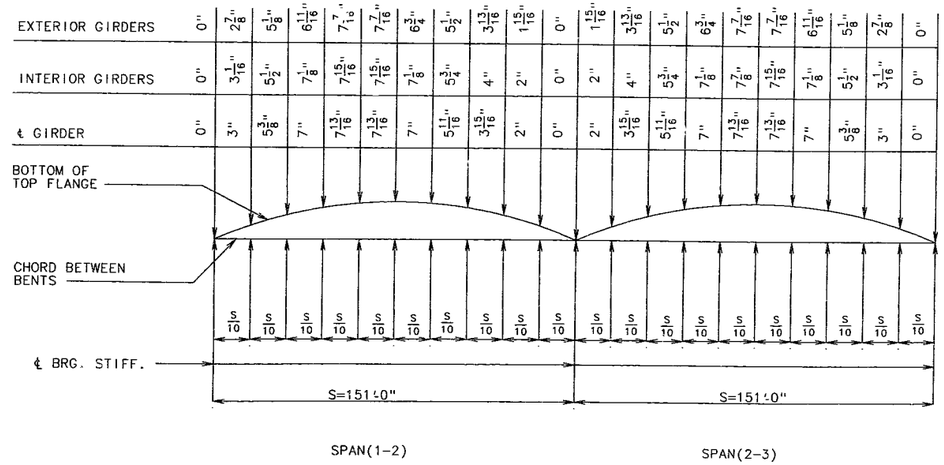

PLATE GIRDER CAMBER DIAGRAM

NOTE: CAMBER INCLUDES ALLOWANCE FOR VERTICAL CURVE, AND FOR DEAD LOAD DEFLECTION DUE TO CONCRETE SLAB, CURB AND STRUCTURAL STEEL.

DETAILED JUN. 1992
CHECKED JULY 1992

NOTE: THIS DRAWING IS NOT TO SCALE. FOLLOW DIMENSIONS.

JACKSON COUNTY A-5249

87 158

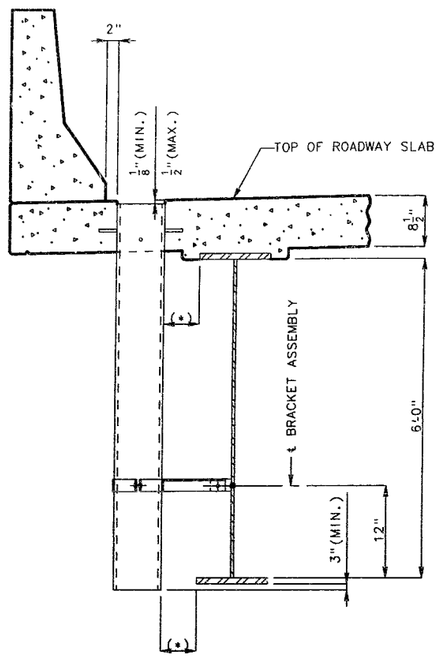

PART ELEVATION OF SLAB AT DRAIN

(*) IF DIMENSION IS LESS THAN 1", DRAINS SHALL BE PLACED PARALLEL TO ROADWAY, OTHERWISE PLACE DRAINS TRANSVERSE TO ROADWAY.

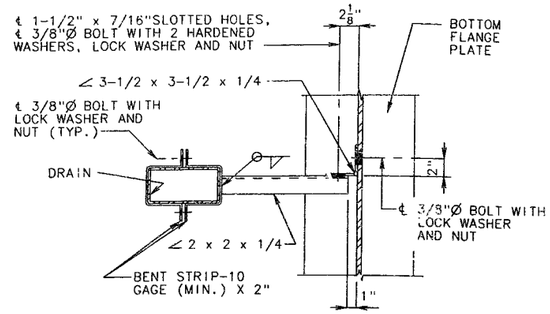

PART PLAN SHOWING BRACKET ASSEMBLY

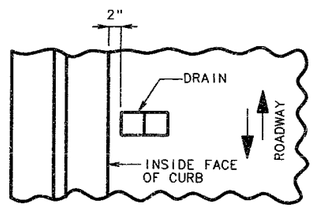

PART PLAN OF SLAB AT DRAIN

DETAILS OF DRAINS TRANSVERSE TO ROADWAY

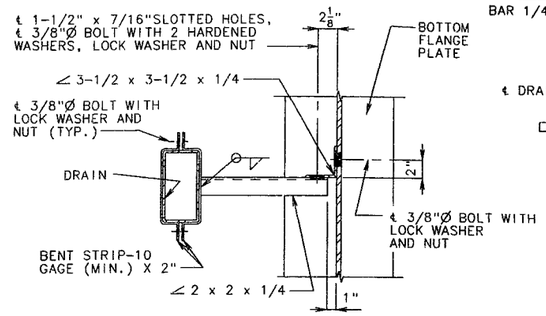

PART PLAN SHOWING BRACKET ASSEMBLY

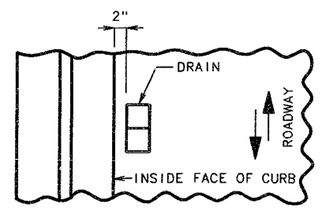

PART PLAN OF SLAB AT DRAIN

DETAILS OF DRAINS PARALLEL TO ROADWAY

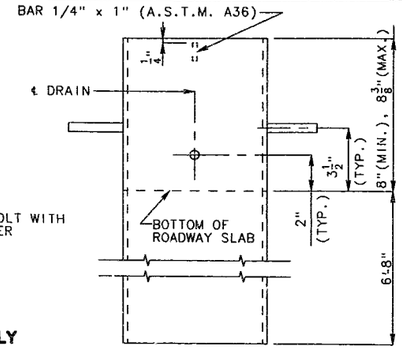

ELEVATION OF DRAIN

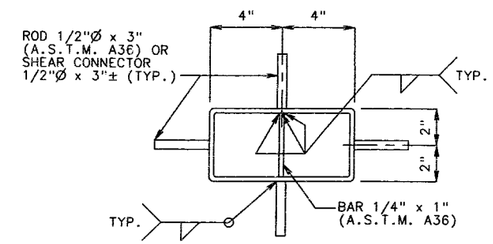

PLAN OF DRAIN

STATE	PROJ. NO.	SHEET NO.
MO.		193

GENERAL NOTES:

SLAB DRAINS MAY BE FABRICATED OF EITHER 1/4" WELDED SHEETS OF A.S.T.M. A36 STEEL OR FROM 1/4" STRUCTURAL STEEL TUBING A.S.T.M. A500 OR A501.

OUTSIDE DIMENSIONS OF DRAINS ARE 8" x 4".

LOCATE DRAINS IN THE SLAB BY DIMENSIONS SHOWN IN THE PART ELEVATION.

SHIFT REINFORCING IN FIELD WHERE NECESSARY TO CLEAR DRAINS.

THE DRAINS AND BRACKET ASSEMBLY SHALL BE GALVANIZED IN ACCORDANCE WITH A.S.T.M. A123.

ALL BOLTS.HARDENED WASHERS, LOCK WASHERS AND NUTS SHALL BE GALVANIZED IN ACCORDANCE WITH A.S.T.M. A153.

THE BOLT HOLE FOR THE BRACKET ASSEMBLY ATTACHMENT SHALL BE LOCATED ON THE PLATE GIRDER SHOP DRAWINGS.

SHOP DRAWINGS WILL NOT BE REQUIRED FOR SLAB DRAINS AND THE BRACKET ASSEMBLY.

SLAB DRAIN DETAILS

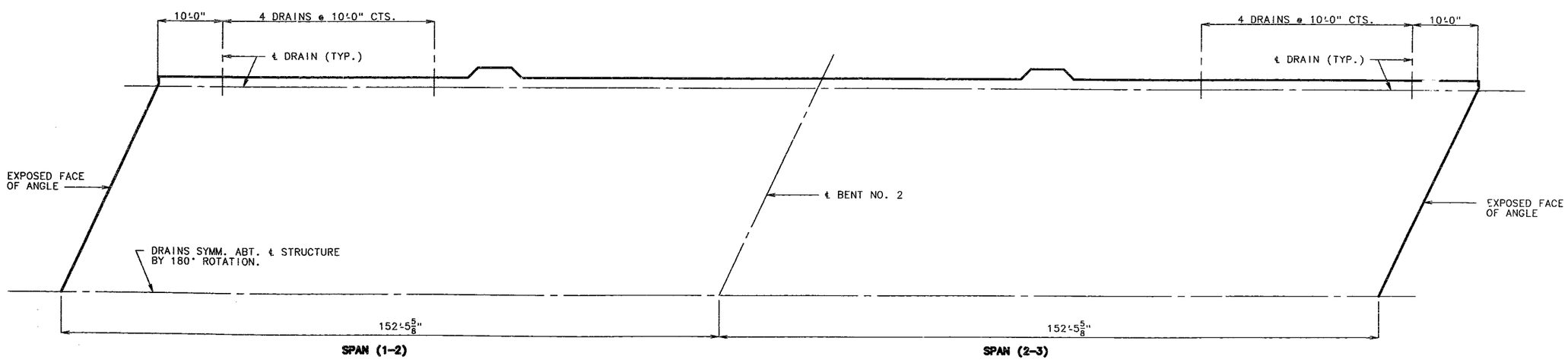

HALF PLAN OF SLAB SHOWING LOCATION OF SLAB DRAINS

NOTE: LONGITUDINAL DIMENSIONS SHOWN ARE HORIZONTAL.

DRAIN .GS 3.30.STL.	REVISED
STEEL GDR DRAIN	OCT. 1988
FEB. 1975	

DETAILED MAY 1991
CHECKED JULY 1992

NOTE: THIS DRAWING IS NOT TO SCALE. FOLLOW DIMENSIONS.

JACKSON COUNTY

A-5249

STATE	PROJ. NO.	SHEET NO.
MO.		194

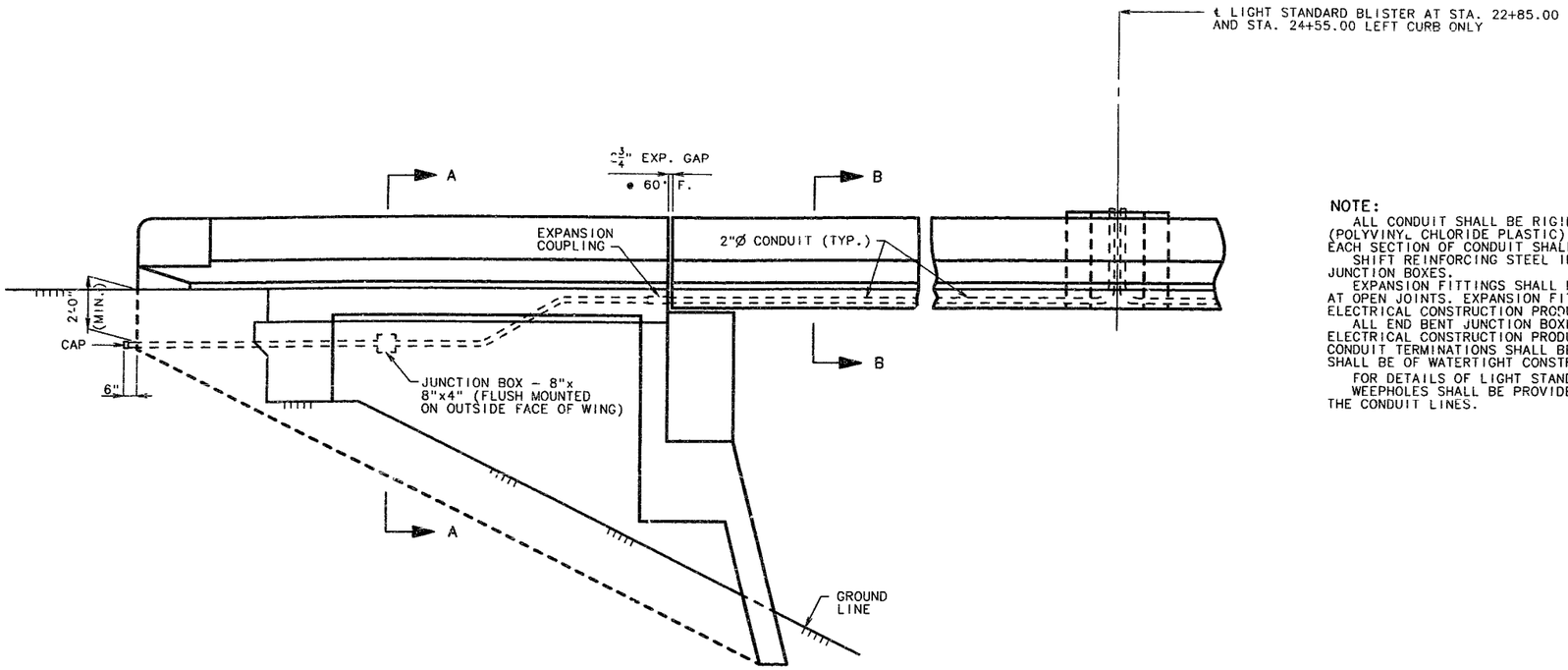

PART SECTION NEAR LEFT ABUTMENT WING SHOWING LOCATION OF 2"Ø CONDUIT
(ABUT. #1 SHOWN, ABUT. #3 OPPOSITE HAND.)

NOTE:
ALL CONDUIT SHALL BE RIGID NON-METALLIC SCHEDULE 40 HEAVY WALL PVC (POLYVINYL CHLORIDE PLASTIC) WITH 3" MINIMUM COVER IN CONCRETE WHERE POSSIBLE. EACH SECTION OF CONDUIT SHALL BEAR THE UNDERWRITERS' LABORATORIES, INC., (UL) LABEL.
SHIFT REINFORCING STEEL IN FIELD WHERE NECESSARY TO CLEAR CONDUIT AND JUNCTION BOXES.
EXPANSION FITTINGS SHALL PROVIDE A MINIMUM MOVEMENT IN EITHER DIRECTION OF 3" AT OPEN JOINTS. EXPANSION FITTINGS SHALL BE EQUAL TO CARLON ELECTRICAL CONSTRUCTION PRODUCTS OR TRIANGLE CONDUIT AND CABLE COMPANY, INC.
ALL END BENT JUNCTION BOXES SHALL BE PVC MOLDED FLUSH MOUNTED AND EQUAL TO CARLON ELECTRICAL CONSTRUCTION PRODUCTS OR TRIANGLE CONDUIT AND CABLE COMPANY, INC. THE CONDUIT TERMINATIONS SHALL BE PERMANENT OR SEPARABLE. THE TERMINATIONS AND COVERS SHALL BE OF WATERTIGHT CONSTRUCTION.
FOR DETAILS OF LIGHT STANDARDS AND WIRING, SEE ELECTRICAL PLANS.
WEEPHOLES SHALL BE PROVIDED AT APPROPRIATE LOCATIONS TO DRAIN ANY MOISTURE IN THE CONDUIT LINES.

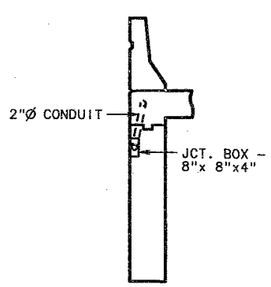

SECTION A-A

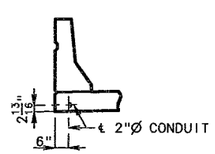

SECTION B-B

DETAILS OF CONDUIT SYSTEM ON STRUCTURE

DETAILED JUN. 1992
CHECKED JULY 1992

NOTE: THIS DRAWING IS NOT TO SCALE. FOLLOW DIMENSIONS.

JACKSON COUNTY

A-5249

249 160

STATE	PROJ. NO.	SHEET NO.
MO.		195

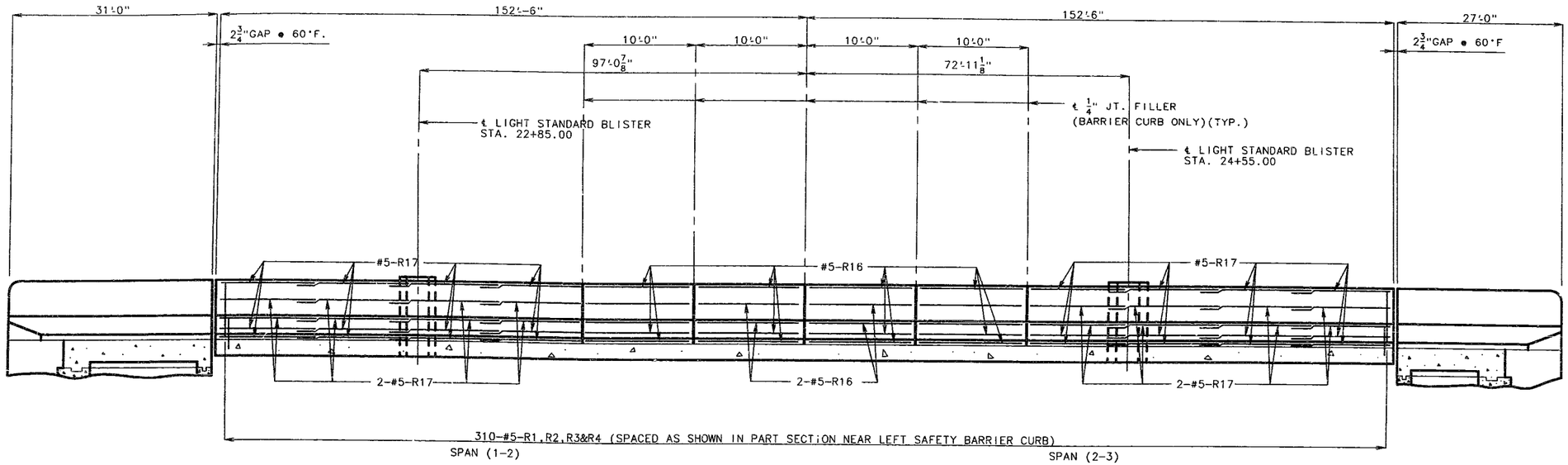

SECTION NEAR LEFT BARRIER CURB

NOTE: RIGHT CURB SIMILAR EXCEPT NO LIGHT BLISTERS ON RIGHT CURB.

NOTE: LONGITUDINAL DIMENSIONS ARE HORIZONTAL AND ALONG TOP OF OUTSIDE EDGE OF SLAB. RUSTIFICATION NOT SHOWN FOR CLARITY.

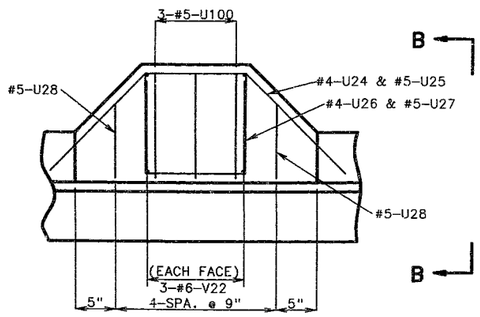

PLAN SHOWING REINFORCEMENT

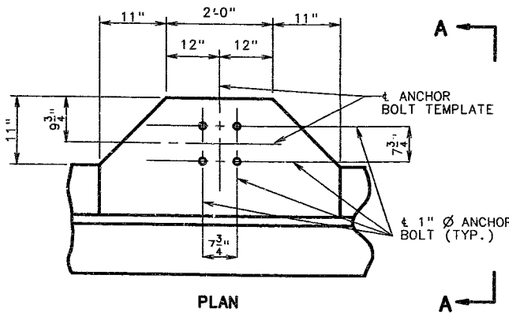

PLAN

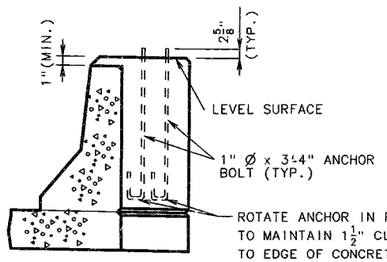

SECTION A-A

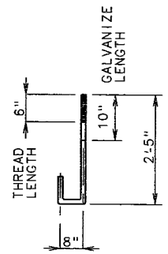

ANCHOR BOLT DETAIL

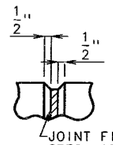

FILLED JOINT DETAIL

NOTE: COST OF FURNISHING AND PLACING ANCHOR BOLTS FOR LIGHT STANDARD SHALL BE INCLUDED IN THE CONTRACT UNIT PRICE FOR OTHER ITEMS. TOP OF LIGHT STANDARD SUPPORTS SHALL BE MADE HORIZONTAL; ANCHOR BOLTS SHALL BE PLACED VERTICALLY.

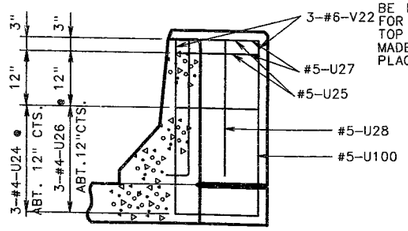

SECTION B-B

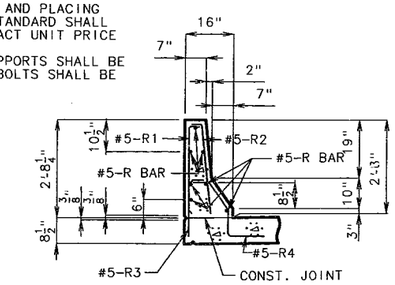

SECTION G-G

NOTE: USE A MINIMUM LAP OF 17" FOR #5 HORIZONTAL SAFETY BARRIER CURB BARS. THE CROSS-SECTIONAL AREA ABOVE THE SLAB = 2.27 SQ. FT.

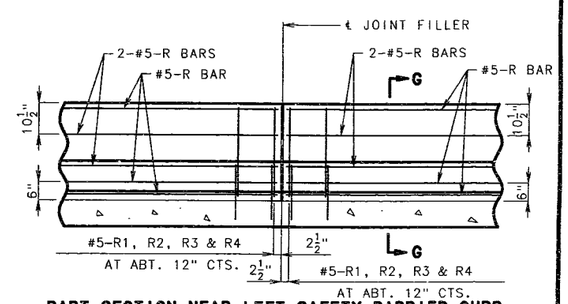

PART SECTION NEAR LEFT SAFETY BARRIER CURB

DETAILS OF LIGHT STANDARD

NOTE: ADDITIONAL CONCRETE AND REINFORCEMENT IN BARRIER CURB AT LIGHT STANDARD SUPPORTS AND LIGHT SIGN SUPPORT SHALL BE INCLUDED IN THE PRICE BID FOR SAFETY BARRIER CURB PER LINEAR FOOT.

DETAILED JUN. 1992
CHECKED JULY 1992

NOTE: THIS DRAWING IS NOT TO SCALE. FOLLOW DIMENSIONS.

JACKSON COUNTY A-5249

220-161

STATE	PROJ. NO.	SHEET NO.
MO.		196

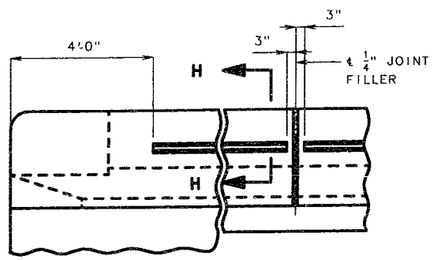

AT END OF WING AT JOINT FILLER

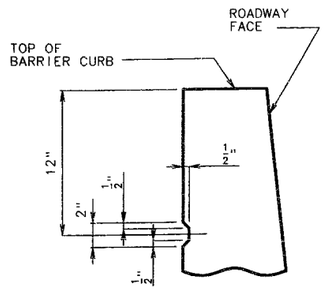

SECTION H-H

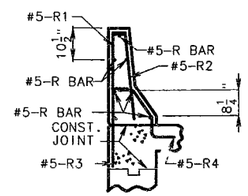

SECTION G-G

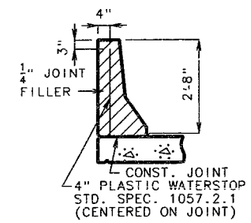

DETAIL OF PLASTIC WATERSTOP

NOTE: PLASTIC WATERSTOP SHALL BE PLACED IN ALL SAFETY BARRIER CURB FILLED JOINTS.

COST OF PLASTIC WATERSTOP COMPLETE-IN-PLACE SHALL BE INCLUDED IN CONTRACT UNIT PRICE FOR SAFETY BARRIER CURB.

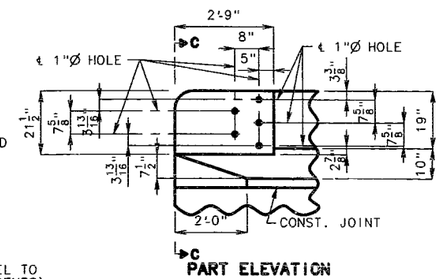

PART ELEVATION

DETAILS OF RUSTICATION

NOTE:

TOP OF SAFETY BARRIER CURB SHALL BE BUILT PARALLEL TO GRADE WITH SAFETY BARRIER CURB JOINTS (EXCEPT AT END BENTS) NORMAL TO GRADE.

ALL EXPOSED EDGES OF SAFETY BARRIER CURB SHALL HAVE EITHER A 1/2" RADIUS OR A 3/8" BEVEL, UNLESS OTHERWISE NOTED.

CONCRETE IN THE SAFETY BARRIER CURB SHALL BE CLASS B1.

WHEN THE SAFETY BARRIER CURB IS BID BY LINEAR FEET, THE CONTRACT UNIT PRICE SHALL INCLUDE THE COST OF ALL CONCRETE AND REINFORCEMENT, COMPLETE-IN-PLACE.

MEASUREMENT OF THE SAFETY BARRIER CURB IS TO THE NEAREST LINEAR FOOT FOR EACH STRUCTURE, MEASURED ALONG THE OUTSIDE TOP OF SLAB FROM END OF WING TO END OF WING.

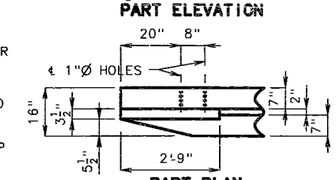

PART PLAN

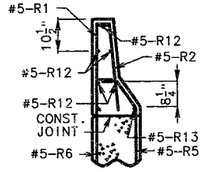

SECTION E-E

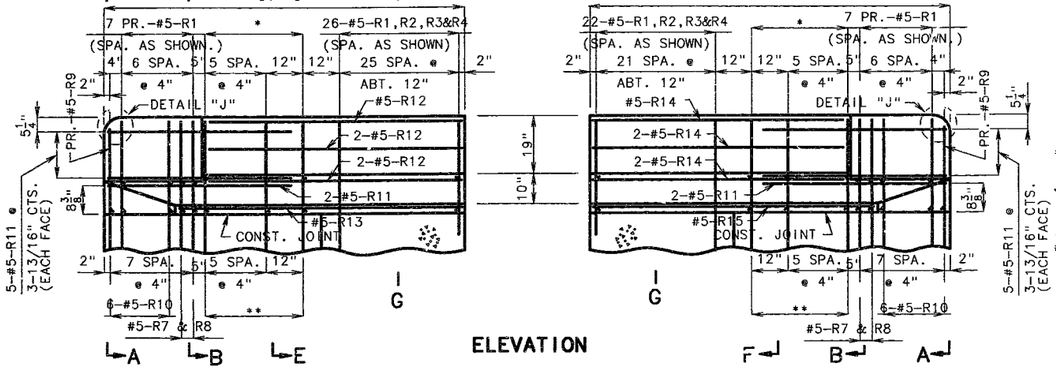

ELEVATION

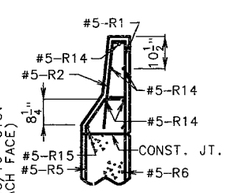

SECTION F-F

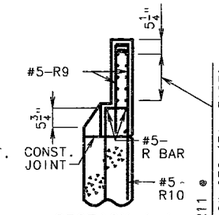

SECTION A-A

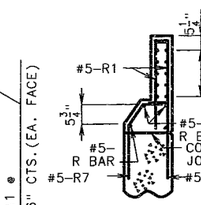

SECTION B-B

NOTE: USE A MINIMUM LAP OF 17" FOR #5 HORIZONTAL SAFETY BARRIER CURB BARS. THE CROSS-SECTIONAL AREA ABOVE THE SLAB = 2.27 SQ. FT.

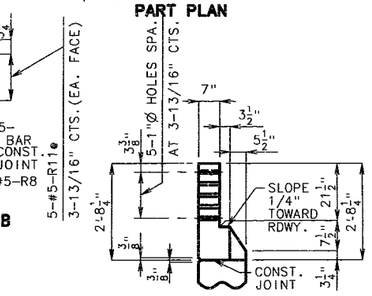

PART SECTION C-C

DETAILS OF GUARD RAIL ATTACHMENT

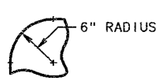

DETAIL "J"

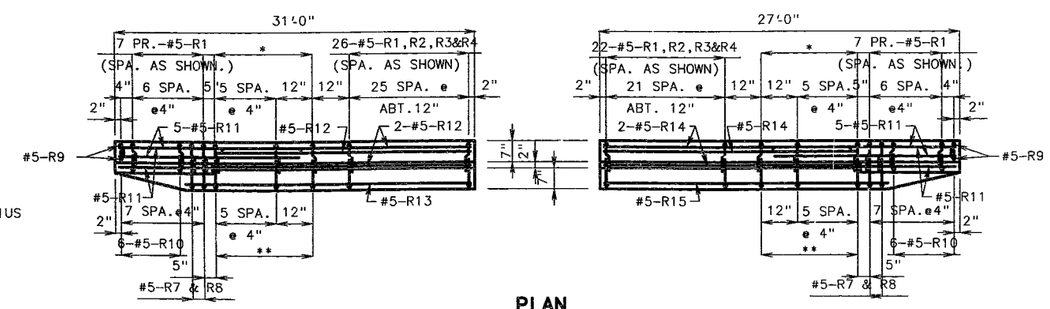

PLAN

NOTE: RIGHT BARRIER CURB SIMILAR.

DETAILS OF LEFT SAFETY BARRIER CURB AT END BENTS

DETAILED JUN. 1992
CHECKED JULY 1992

NOTE: THIS DRAWING IS NOT TO SCALE. FOLLOW DIMENSIONS.

SHEET NO. 24 OF 33.

JACKSON COUNTY

A-5249

324 162

STATE	PROJ. NO.	SHEET NO.
MO.		197

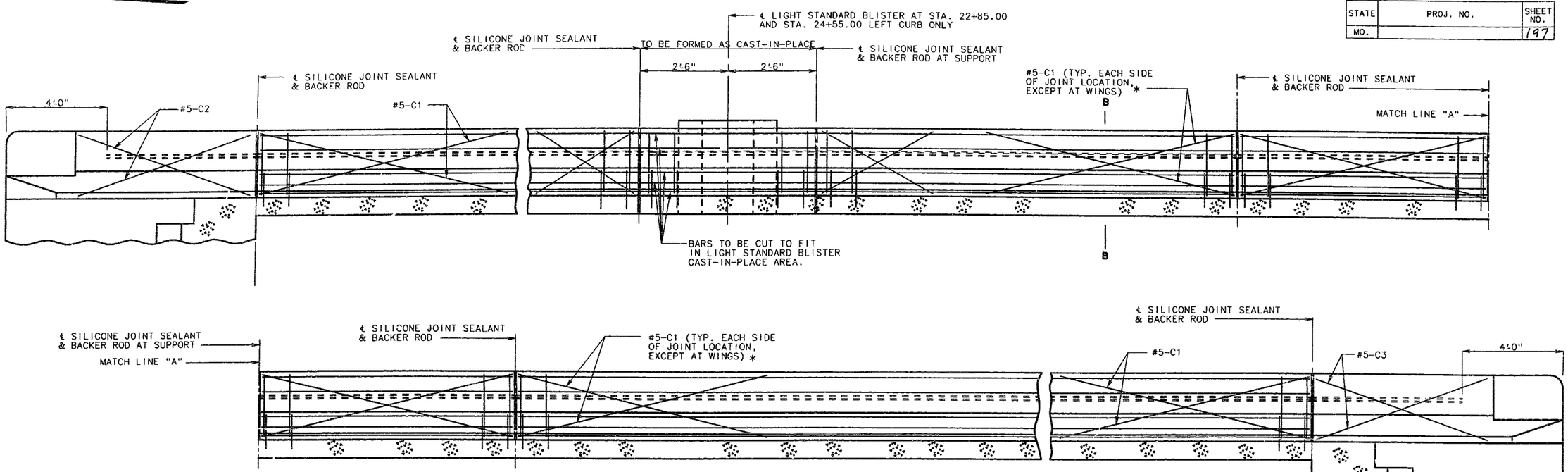

NOTE:

TOP OF SAFETY BARRIER CURB SHALL BE BUILT PARALLEL TO GRADE WITH SAFETY BARRIER CURB JOINTS (EXCEPT AT END BENTS) NORMAL TO GRADE.

WHEN THE SAFETY BARRIER CURB IS BID BY LINEAR FEET, THE CONTRACT UNIT PRICE SHALL INCLUDE THE COST OF ALL CONCRETE AND REINFORCEMENT, COMPLETE-IN-PLACE.

CONCRETE IN THE SAFETY BARRIER CURB SHALL BE CLASS B1.

MEASUREMENT OF SAFETY BARRIER CURB IS TO THE NEAREST LINEAR FOOT FOR EACH STRUCTURE, MEASURED ALONG THE OUTSIDE TOP OF SLAB FROM END OF WING TO END OF WING.

TYPICAL SECTION NEAR LEFT SAFETY BARRIER CURB AT SUPPORT LOCATIONS
(OPTIONAL SLIP-FORM BRIDGE SAFETY BARRIER CURB)
(RIGHT CURB SIMILAR EXCEPT NO LIGHT BLISTERS ON RIGHT CURB.)

NOTE:

JOINT SEALANT AND BACKER RODS SHALL BE USED ON ALL SLIP-FORM BRIDGE SAFETY BARRIER CURBS INSTEAD OF JOINT FILLER.

PLASTIC WATERSTOP SHALL NOT BE USED WITH SLIP-FORM OPTION.

C BARS (SLIP-FORM OPTION ONLY) SHALL BE USED IN ADDITION TO CAST-IN-PLACE CONVENTIONAL FORMING REINFORCEMENT FOR BRIDGE SAFETY BARRIER CURB.

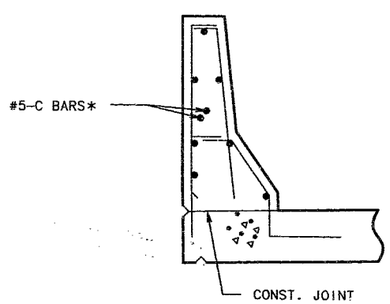

PART SECTION B-B

NOTE: * EACH SIDE OF JOINT LOCATION, EXCEPT SPAN SIDE AT END BENTS AND INSIDE AREA FOR LIGHT BLISTER.

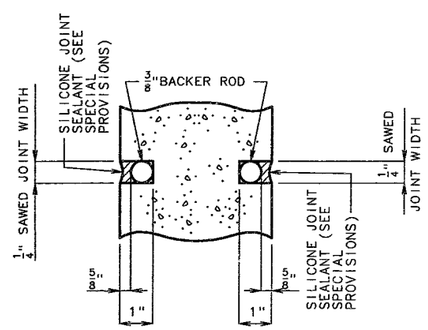

SECTION A-A

NOTE: COST OF SILICONE JOINT SEALANT AND BACKER ROD COMPLETE IN PLACE TO BE INCLUDED IN THE CONTRACT UNIT PRICE FOR SAFETY BARRIER CURB.

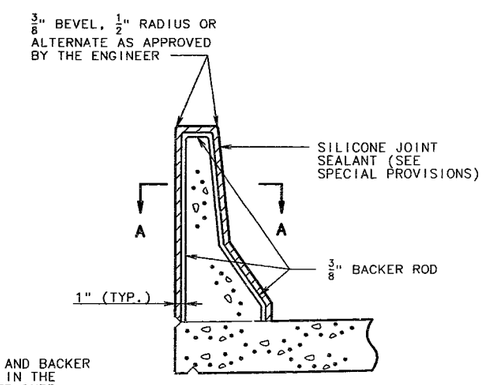

SECTION THRU JOINT

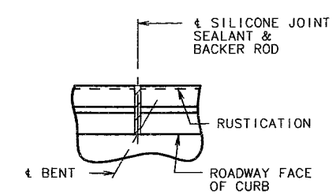

PART PLAN SHOWING SAFETY BARRIER CURB JOINT

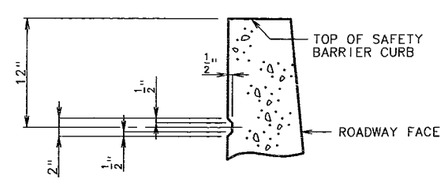

PART SECTION SHOWING RUSTICATION DETAILS

RUSTICATION DETAIL
(USE ON HIGHWAY GRADE SEPARATION ONLY)

OPTIONAL SLIP-FORM BRIDGE SAFETY BARRIER CURB

B/C SF16.GS 3.3		A
BARRIER CURB ELEVATION	REVISED	
FEB. 1991		

DETAILED MAY 1992
CHECKED JULY 1992

NOTE: THIS DRAWING IS NOT TO SCALE. FOLLOW DIMENSIONS.

JACKSON COUNTY

A-5249

STATE	PROJ. NO.	SHEET NO.
MO.		198

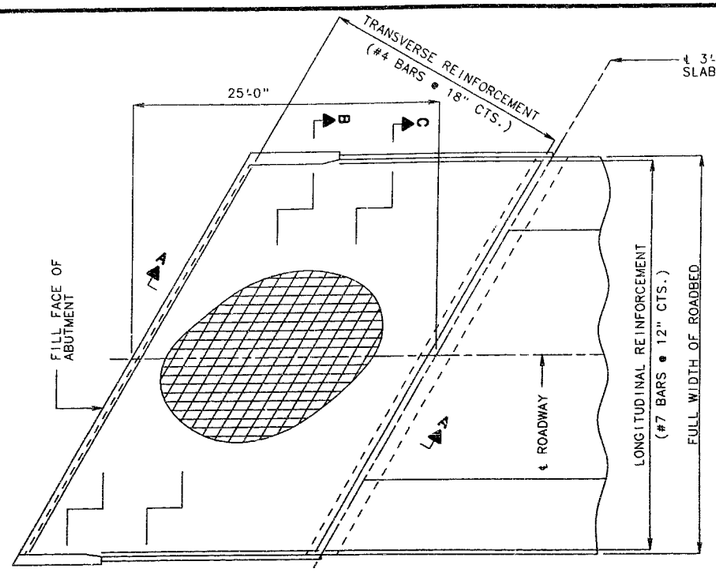

TOP OF SLAB REINFORCEMENT

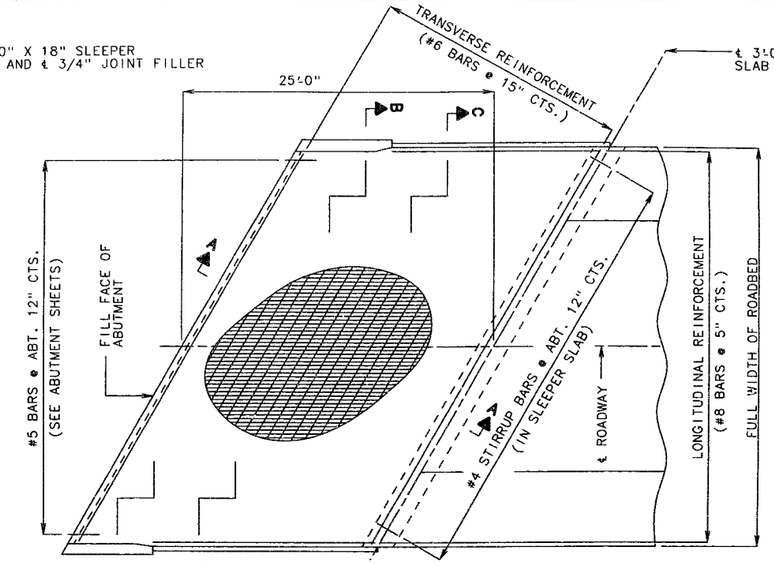

BOTTOM OF SLAB REINFORCEMENT

(SLEEPER SLAB REINFORCEMENT NOT SHOWN FOR CLARITY.)

PART PLANS SHOWING REINFORCEMENT

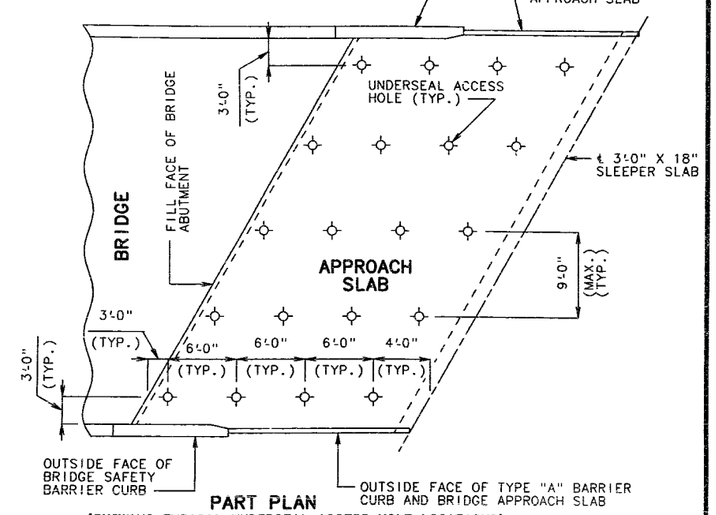

PART PLAN
(SHOWING TYPICAL UNDERSEAL ACCESS HOLE LOCATIONS)

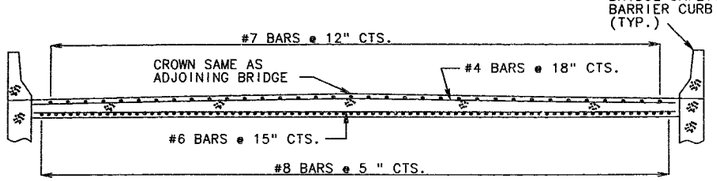

PART SECTION B-B

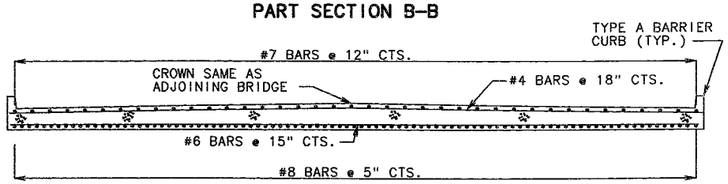

PART SECTION C-C

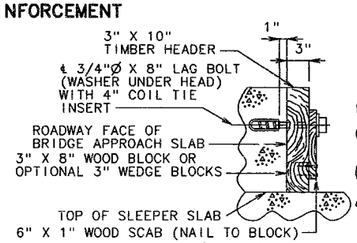

SECTION D-D

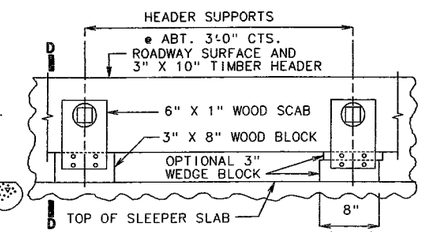

PART ELEVATION

NOTE: REMOVE TIMBER HEADER WHEN CONCRETE PAVEMENT IS PLACED.

DETAILS OF TIMBER HEADER

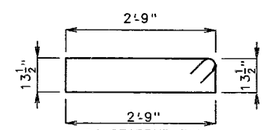

#4 STIRRUP BAR (ACTUAL LENGTH = 8'-3")

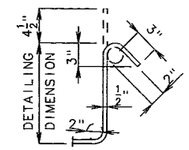

TYPICAL 135° STIRRUP HOOK DIMENSIONS BENDING DIAGRAM

NOTE:
NOMINAL LENGTHS ARE BASED ON OUT TO OUT DIMENSIONS SHOWN IN BENDING DIAGRAM AND ARE LISTED FOR FABRICATORS USE. (NEAREST INCH)

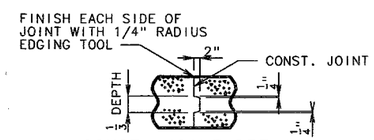

CONST. JOINT DETAIL
(IF REQUIRED)

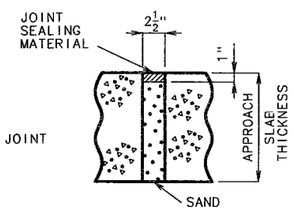

TYPICAL UNDERSEAL ACCESS HOLE DETAIL

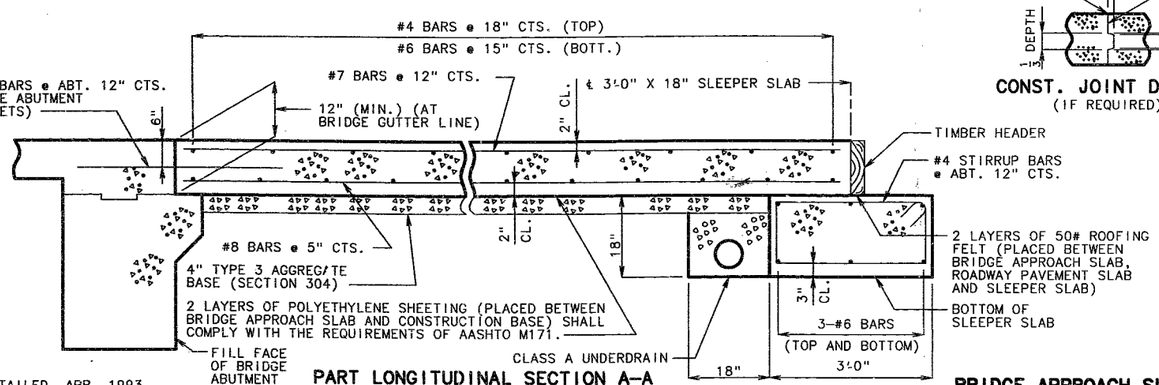

PART LONGITUDINAL SECTION A-A

NOTE: THIS DRAWING IS NOT TO SCALE. FOLLOW DIMENSIONS.

BRIDGE APPROACH SLAB

GENERAL NOTES:

ALL CONCRETE FOR THE BRIDGE APPROACH SLAB AND SLEEPER SLAB SHALL BE IN ACCORDANCE WITH SECTION 503 (f'c = 4,000 PSI).

ALL JOINT FILLER SHALL MEET THE REQUIREMENTS OF SECTION 1057.2.5, EXCEPT AS NOTED.

THE REINFORCING STEEL IN THE BRIDGE APPROACH SLAB AND THE SLEEPER SLAB SHALL BE EPOXY COATED GRADE 60 WITH FY = 60,000 PSI.

MINIMUM CLEARANCE TO REINFORCING STEEL SHALL BE 1-1/2", UNLESS OTHERWISE SHOWN.

THE REINFORCING STEEL IN THE BRIDGE APPROACH SLAB AND THE SLEEPER SLAB SHALL BE CONTINUOUS. THE TRANSVERSE REINFORCING STEEL MAY BE MADE CONTINUOUS BY LAP SPLICING THE #4 & #6 BARS 22" AND 34" RESPECTIVELY.

MECHANICAL BAR SPLICES WILL BE PERMITTED AND SHALL DEVELOP AT LEAST 125 PERCENT OF THE SPECIFIED YIELD STRENGTH OF THE REINFORCING BARS BEING SPLICED. THE CONTRACTOR SHALL FURNISH THE ENGINEER THE MANUFACTURER'S CERTIFICATION THAT THIS REQUIREMENT IS MET AND IS REQUIRED TO FOLLOW THE MANUFACTURER'S RECOMMENDATION FOR INSTALLATION.

MECHANICAL BAR SPLICES SHALL BE EPOXY COATED.

HOOKS AND BENDS SHALL BE IN ACCORDANCE WITH THE C.R.S.I. MANUAL OF STANDARD PRACTICE FOR DETAILING REINFORCED CONCRETE STRUCTURES, STIRRUP AND TIE DIMENSIONS.

PLACE CLASS A UNDERDRAIN AT FACE OF SLEEPER SLAB UNDER BRIDGE APPROACH SLAB.

THE CONTRACTOR SHALL POUR AND SATISFACTORILY FINISH THE BRIDGE SLAB BEFORE POURING THE BRIDGE APPROACH SLABS.

LONGITUDINAL CONSTRUCTION JOINTS IN APPROACH SLAB AND SLEEPER SLAB SHALL BE ALIGNED WITH LONGITUDINAL CONSTRUCTION JOINTS IN BRIDGE SLAB.

PAYMENT FOR FURNISHING ALL MATERIALS AND LABOR NECESSARY TO CONSTRUCT THE APPROACH SLAB AND TIMBER HEADER, COMPLETE IN PLACE, AS SHOWN ON THIS SHEET, SHALL BE CONSIDERED AS COMPLETELY COVERED UNDER THE CONTRACT UNIT PRICE FOR "BRIDGE APPROACH SLAB (BRIDGE)", PER SQ. YD.

GENERAL NOTES (CONT.):

SEE MISSOURI STANDARD PLANS DRAWING 504.00 FOR DETAILS OF CONCRETE APPROACH PAVEMENT.

SEE MISSOURI STANDARD PLANS DRAWING 605.10 FOR DETAILS OF CLASS A UNDERDRAIN.

SEE MISSOURI STANDARD PLANS DRAWING 609.00 FOR DETAILS OF TYPE A BARRIER CURB.

APP SLAB.GS 3.30 ... REVISED
DECEMBER 1992 FEB. 1993

DETAILED APR. 1993
CHECKED APR. 1993

JACKSON COUNTY A-5249

BILL OF REINFORCING STEEL

NO. REQ'D.	MARK NO. (SIZE MARK)	LOCATION	EPOXY (E)	SHAPE NO.	STIRRUP (S)	SUBSTR. (X)	VARIES (V)	NO. EACH	B FT. IN.	C FT. IN.	D FT. IN.	E FT. IN.	F FT. IN.	H FT. IN.	K FT. IN.	NOMINAL LENGTH FT. IN.	ACTUAL LENGTH FT. IN.	WEIGHT LBS.
		SUBSTRUCTURE																
		ABUT. NO. 1																
15	5D4	FOOTINGS		18		X			8 8.000							9 10	9 10	154
24	5D5	FOOTINGS		20		X			4 2.000							4 2	4 2	104
78	8D6	FOOTINGS		17		X			6 2.000							7 1	7 1	1475
8	9H8	BEAM		18		X			47 7.000							50 1	50 1	1362
20	6H9	BEAM		20		X			47 7.000							47 7	47 7	1429
8	9H10	BEAM		17		X			19 7.000							20 10	20 10	567
8	9H11	BEAM		17		X	V	1	37 0.000							38 3	38 3	
		INCREMENT =							35 0.000							36 3	36 3	1013
		3.375 INCH																
16	4H12	BACKWALL		20		X			24 9.000							24 9	24 9	265
8	6H13	BEAM		18		X			47 7.000							48 11	48 11	588
2	4H14	APPROACH H.		20		X			23 3.000							23 3	23 3	31
12	4H15	CURTAIN WALL		20		X			3 3.000							3 3	3 3	26
12	4H16	WING		20		X	V	2	17 0.000							17 0	17 0	
		INCREMENT =							4 5.000							4 5	4 5	86
		30.250 INCH																
2	4H17	WING		20		X			16 0.000							16 0	16 0	21
2	4H18	WING		20		X			19 6.000							19 6	19 6	26
6	5H19	WING		20		X	V	2	28 9.000							28 9	28 9	
		INCREMENT =							24 1.000							24 1	24 1	165
		28.000 INCH																
4	5H20	WING		20		X			30 8.000							30 8	30 8	128
4	5H21	WING		20		X			5 3.000							5 3	5 3	22
12	4H22	WING		20		X	V	2	17 0.000							17 0	17 0	
		INCREMENT =							4 5.000							4 5	4 5	86
		30.250 INCH																
2	4H23	WING		20		X			14 5.000							14 5	14 5	19
2	4H24	WING		20		X			18 0.000							18 0	18 0	24
8	5H25	WING		20		X	V	2	29 6.000							29 6	29 6	
		INCREMENT =							22 6.000							22 6	22 6	217
		28.000 INCH																
2	5H26	WING		20		X			30 8.000							30 8	30 8	64
4	5H27	WING	E	20		X			5 3.000							5 3	5 3	22
4	4H28	WING		20		X			4 11.000							4 11	4 11	13
4	4H29	WING		20		X			6 5.000							6 5	6 5	17
12	4H30	CURTAIN WALL		20		X			4 5.000							4 5	4 5	35
48	4P2	COLUMNS		10	S	X	V	6		3 0.500	2 3.000					8 4	8 2	
		INCREMENT =								2 0.200	2 3.000					6 3	6 1	228
		3.625 INCH																
2	7T1	WING		23		X			32 1.750	3 6.375			29 6.000	12 9.250		35 8	35 7	145
2	7T2	WING		23		X			6 8.000	2 1.750			2 7.750	6 1.375		8 10	8 10	36
7	6T3	WING		23	S	X			2 0.125	2 0.000			21.000	12.000		4 0	3 11	41
2	4T4	CURTAIN WALL		19	S	X			7 6.000	3 4.000						10 10	10 9	14
2	7T5	WING		23	S	X			32 1.750	2 9.000			29 6.000	12 9.375		34 11	34 10	142
2	7T6	WING		23		X			8 4.125	2 1.750			3 3.750	7 7.875		10 6	10 6	43
7	6T7	WING		21	S	X			2 0.125	2 0.000			21.000	12.000		4 0	3 7	38
2	4T8	CURTAIN WALL		19	S	X			7 6.000	4 5.000						.1 11	11 10	16

BILL OF REINFORCING STEEL

NO. REQ'D.	MARK NO. (SIZE MARK)	LOCATION	EPOXY (E)	SHAPE NO.	STIRRUP (S)	SUBSTR. (X)	VARIES (V)	NO. EACH	B FT. IN.	C FT. IN.	D FT. IN.	E FT. IN.	F FT. IN.	H FT. IN.	K FT. IN.	NOMINAL LENGTH FT. IN.	ACTUAL LENGTH FT. IN.	WEIGHT LBS.
1	6U9	BEAM		13	S	X			2 6.375	2 9.250	3 3.375	2 8.000				12 7	12 1	18
21	6U10	BEAM		13	S	X			3 6.000	2 9.250	4 3.000	2 8.000				14 6	14 0	442
52	6U11	BEAM		13	S	X			3 6.000	2 11.500	4 3.000	2 10.375				14 11	14 5	1126
4	4U12	BEAM		10	S	X				6.000	3 6.000					4 6	4 4	12
44	4U13	APPROACH H.		10	S	X				17.500	6.000					3 5	3 3	96
46	5U14	BEAM		13	S	X			2 7.125	2 8.000	2 7.125	2 8.000				11 5	11 2	536
48	5U15	BEAM	E	10	S	X				2 7.500	2 7.125					7 10	7 8	384
45	5V2	BACKWALL	E	20		X			8 7.000							8 7	8 7	403
45	6V3	BACKWALL	E	20		X			8 10.000							8 10	8 10	597
78	8V4	COLUMNS		17		X			9 5.000							10 4	10 4	2152
4	4V5	CURTAIN WALL		20		X			7 6.000							7 6	7 6	20
10	5V6	WING		20		X	V	2	5 7.000							5 7	5 7	
		INCREMENT =							4 0.000							4 0	4 0	50
		4.750 INCH																
32	4V7	WING		20		X	V	2	15 8.000							15 8	15 8	
		INCREMENT =							6 0.000							6 0	6 0	232
		7.750 INCH																
6	4V8	WING		20		X	V	2	10 1.000							10 1	10 1	
		INCREMENT =							8 9.000							8 9	8 9	38
		8.000 INCH																
62	5V9	CURTAIN WALL		20		X			9 2.000							9 2	9 2	593
10	5V25	WING		20		X	V	2	4 10.000							4 10	4 10	
		INCREMENT =							3 1.000							3 1	3 1	41
		5.250 INCH																
32	4V26	WING		20		X	V	2	14 10.000							14 10	14 10	
		INCREMENT =							5 3.000							5 3	5 3	215
		7.625 INCH																
8	4V27	WING		20		X	V	2	9 11.000							9 11	9 11	
		INCREMENT =							8 0.000							8 0	8 0	48
		7.625 INCH																
10	W5W1	A.B.WELLS		22		X			18.000	9.125						26 1	26 1	44
		INT. BT.NO.2																
60	8D1	FOOTINGS		20		X			8 8.000							8 8	8 8	1388
6	6D2	FOOTINGS		10	S	X				5 4.000	8 0.000					18 8	18 4	165
45	9D3	FOOTINGS		20		X			7 11.000							7 11	7 11	1211
8	7H1	BEAM		7		X			4 4.000	3 7.500						10 7	10 7	173
9	10H2	BEAM		20		X			42 0.000							42 0	42 0	1627
4	6H3	BEAM		20		X			42 0.000							42 0	42 0	252
9	10H4	BEAM		17		X			21 5.000							22 10	22 10	884
9	10H5	BEAM		20		X			21 4.000							21 4	21 4	826
2	10H6	BEAM		17		X			23 1.000							24 6	24 6	211
7	10H7	BEAM		17		X			24 3.000							25 8	25 8	773
57	4P1	COLUMNS		16		X			2 9.000							9 6	9 6	362
1	6U1	BEAM		13	S	X			3 9.000	3 3.000	3 9.000	3 3.000				15 4	14 10	22

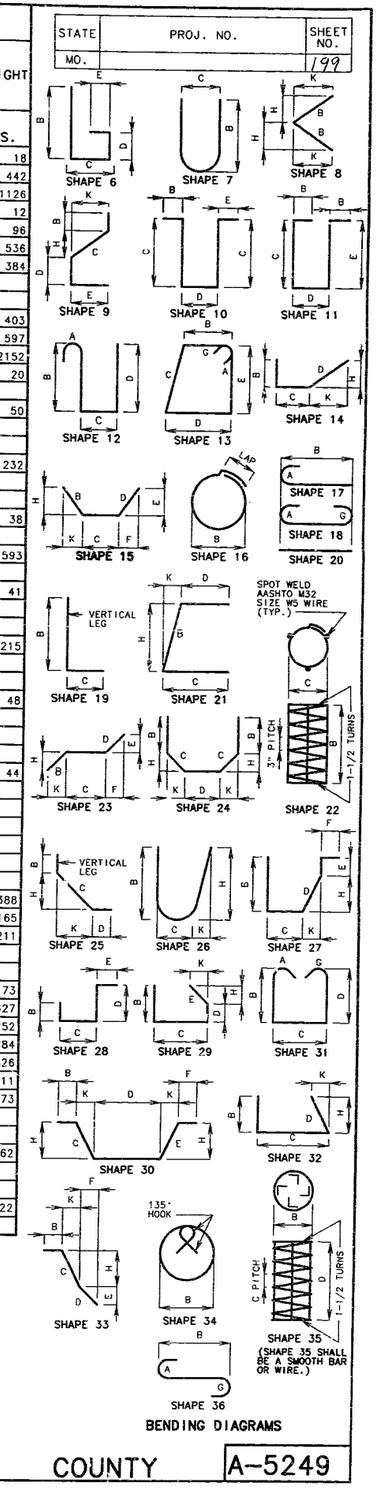

STATE	PROJ. NO.	SHEET NO.
MO.		199

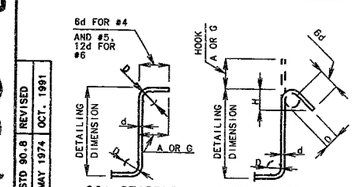

STIRRUP HOOK DIMENSIONS				
GRADES 40 - 50 - 60 KSI				
BAR SIZE	D (IN.)	90° HOOK	135° HOOK	
		HOOK A OR G	HOOK A OR G	APPROX. H
#4	2"	4-1/2"	4-1/2"	3"
#5	2-1/2"	6"	5-1/2"	3-3/4"
#6	4-1/2"	12"	8"	4-1/2"

NOTE: UNLESS OTHERWISE NOTED DIAMETER "D" IS THE SAME FOR ALL BENDS AND HOOKS ON A BAR.

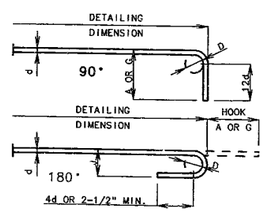

NOTE: THIS DRAWING IS NOT TO SCALE. FOLLOW DIMENSIONS.

TWO ADDITIONAL END HOOK DIMENSIONS ARE INCLUDED IN THE BAR BILL FOR TESTING.

END HOOK DIMENSIONS				
BAR SIZE	D (IN.)	ALL GRADES		
		180° HOOKS		90° HOOKS
		A OR G	J	A OR G
#3	2-1/4"	5"	3"	6"
#4	3"	6"	4"	8"
#5	3-3/4"	7"	5"	10"
#6	4-1/2"	8"	6"	12"
#7	5-1/4"	10"	7"	14"
#8	6"	11"	8"	16"
#9	9-1/2"	15"	11-3/4"	19"
#10	10-3/4"	17"	13-1/4"	22"
#11	12"	19"	14-3/4"	2'-0"
#14	18-1/4"	2'-3"	21-3/4"	2'-7"

NOTE:
ALL STANDARD HOOKS AND BENDS OTHER THAN 180 DEG. TO BE BENT WITH THE SAME PROCEDURE AS FOR 90 DEG. STD. HOOKS.
HOOKS AND BENDS SHALL BE IN ACCORDANCE WITH THE PROCEDURES AS SHOWN ON THIS SHEET.
E = EPOXY COATED REINFORCEMENT.
S = STIRRUP.
X = BAR IS INCLUDED IN SUBSTRUCTURE QUANTITIES.
V = BAR DIMENSIONS VARY IN EQUAL INCREMENTS BETWEEN DIMENSIONS SHOWN ON THIS LINE AND THE FOLLOWING LINE.
NO. EA. = NUMBER OF BARS OF EACH LENGTH.
NOMINAL LENGTHS ARE BASED ON OUT TO OUT DIMENSIONS SHOWN IN BENDING DIAGRAMS AND ARE LISTED FOR FABRICATORS USE. (NEAREST INCH)
ACTUAL LENGTHS ARE MEASURED ALONG CENTERLINE BAR TO THE NEAREST INCH.
PAYWEIGHTS ARE BASED ON ACTUAL LENGTHS.
FOUR ANGLE OR CHANNEL SPACERS ARE REQUIRED FOR EACH COLUMN SPIRAL. SPACERS ARE TO BE PLACED ON INSIDE OF SPIRALS. LENGTH AND WEIGHT OF COLUMN SPIRALS DO NOT INCLUDE SPLICES OR SPACERS.
REINFORCING STEEL (GRADE 60) = FY 60,000 PSI.

STD 90.8 REVISED	
MAY 1974	OCT. 1991

DETAILED MAR. 1993
CHECKED MAR. 1993

SHEET NO. 27 OF 33.

JACKSON COUNTY

A-5249

165 324

BILL OF REINFORCING STEEL

NO. REQ'D.	MARK NO. SIZE MARK	LOCATION	EPOXY (E)	SHAPE NO.	STIRRUP (S)	SUBSTR. (X)	VARIES (V)	NO. EACH	B FT. IN.	C FT. IN.	D FT. IN.	E FT. IN.	F FT. IN.	H FT. IN.	K FT. IN.	NOMINAL LENGTH FT. IN.	ACTUAL LENGTH FT. IN.	WEIGHT LBS.
32	6U2	BEAM		13	S	X			2 9.750	3 3.000	2 9.750	3 3.000				13 6	13 0	625
1	6U3	BEAM		13	S	X			2 11.250	3 3.000	2 11.250	3 3.000				13 9	13 3	20
16	6U4	BEAM		13	S	X			2 9.750	3 6.625	2 9.750	3 6.625				14 1	13 7	326
6	6U5	BEAM		13	S	X			3 9.000	3 6.625	3 9.000	3 6.625				15 11	15 6	140
12	6U6	BEAM		13	S	X			3 9.000	3 10.000	3 9.000	3 10.000				16 6	16 0	288
48	6U7	BEAM		13	S	X			2 9.750	3 10.000	2 9.750	3 10.000				14 8	14 2	1021
1	6U8	BEAM		13	S	X			2 11.250	3 10.000	2 11.250	3 10.000				14 11	14 5	22
4	4U50	BEAM		10	S	X				6.000	3 9.000					4 9	4 7	12
45	9V1	COLUMNS		20		X			21 0.000							21 0	21 0	3213
10	W5W2	A.B.WELLS		22		X			2 1.000	9.125						33 2	33 2	55
		ABUT. NO. 3																
18	6D7	FOOTINGS		18		X			8 8.000							10 0	10 0	270
24	5D8	FOOTINGS		20		X			4 8.000							4 8	4 8	117
72	8D9	FOOTINGS		17		X			6 2.000							7 1	7 1	1362
8	9H31	BEAM		18		X			47 7.000							50 1	50 1	1362
14	6H32	BEAM		20		X			47 7.000							47 7	47 7	1001
8	9H33	BEAM		17		X			20 4.000							21 7	21 7	587
8	9H34	BEAM		20		X			18 11.000							18 11	18 11	515
8	9H35	BEAM		17		X	V	1	26 0.000							27 3	27 3	
		INCREMENT = 3.250 INCH							24 1.000							25 4	25 4	715
16	4H36	BACKWALL		20		X			24 9.000							24 9	24 9	265
8	6H37	BEAM		18		X			47 7.000							48 11	48 11	588
2	4H38	APPROACH H.		20		X			23 3.000							23 3	23 3	31
12	4H39	CURTAIN WALL		20		X			3 3.000							3 3	3 3	26
12	4H40	CURTAIN WALL		20		X			4 5.000							4 5	4 5	35
8	4H41	WING		20		X	V	2	13 7.000							13 7	13 7	
		INCREMENT = 30.375 INCH							6 0.000							6 0	6 0	52
2	4H42	WING		20		X			12 7.000							12 7	12 7	17
2	4H43	WING		20		X			16 1.000							16 1	16 1	21
6	5H44	WING		20		X	V	2	25 3.000							25 3	25 3	
		INCREMENT = 27.500 INCH							20 8.000							20 8	20 8	144
2	5H45	WING		20		X			26 8.000							26 8	26 8	56
4	5H46	WING		20		X			5 3.000							5 3	5 3	22
4	5H47	WING	E	20		X			5 3.000							5 3	5 3	22
4	4H48	WING		20		X			5 1.000							5 1	5 1	14
10	4H49	WING		20		X	V	2	12 9.000							12 9	12 9	
		INCREMENT = 30.250 INCH							2 8.000							2 8	2 8	51
2	4H50	WING		20		X			10 4.000							10 4	10 4	14
2	4H51	WING		20		X			13 9.000							13 9	13 9	18
8	5H52	WING		20		X	V	2	25 4.000							25 4	25 4	
		INCREMENT = 27.625 INCH							18 5.000							18 5	18 5	183
2	5H53	WING		20		X			26 8.000							26 8	26 8	56
4	4H54	WING		20		X			6 6.000							6 6	6 6	17

BILL OF REINFORCING STEEL

NO. REQ'D.	MARK NO. SIZE MARK	LOCATION	EPOXY (E)	SHAPE NO.	STIRRUP (S)	SUBSTR. (X)	VARIES (V)	NO. EACH	B FT. IN.	C FT. IN.	D FT. IN.	E FT. IN.	F FT. IN.	H FT. IN.	K FT. IN.	NOMINAL LENGTH FT. IN.	ACTUAL LENGTH FT. IN.	WEIGHT LBS.
36	4P3	COLUMNS		10	S	X	V	6		2 10.000	2 3.000					7 11	7 9	
		INCREMENT = 3.250 INCH								2 2.000	2 3.000					6 7	6 5	170
2	7T9	WING		23		X			27 9.625	21.875				25 6.125	11 0.625	29 8	29 6	121
2	7T10	WING		23		X			4 4.750	3 6.500				21.000	4 0.375	7 11	7 11	32
2	4T11	CURTAIN WALL		19	S	X			7 5.000	3 3.000						10 8	10 7	14
5	6T13	WING		23	S	X			2 0.125	2 0.000				21.000	12.000	4 0	3 11	29
2	7T14	WING		23		X			27 9.625	21.250				25 6.125	11 0.625	29 7	29 6	121
2	7T15	WING		23		X			7 8.500	2 0.500				3 0.750	7 0.875	9 9	9 9	40
2	4T16	CURTAIN WALL		19	S	X			7 6.000	4 5.000						11 11	11 10	16
5	6T17	WING		21	S	X			2 0.125	2 0.000				21.000	12.000	4 0	3 7	27
1	6U16	BEAM		13	S	X			2 6.375	3 6.750	3 3.375	3 5.750				14 2	13 8	21
23	6U17	BEAM		13	S	X			3 6.000	2 9.250	4 3.000	2 8.000				14 6	14 0	484
13	6U18	BEAM		13	S	X			3 6.000	3 2.125	4 3.000	3 1.000				15 4	14 10	290
37	6U19	BEAM		13	S	X			3 6.000	3 6.750	4 3.000	3 5.750				16 2	15 8	871
4	4U20	BEAM		10	S	X				6.000	3 6.000					4 6	4 4	12
46	4U21	BEAM		13	S	X			2 7.125	2 8.000	2 7.125	2 8.000				11 3	11 0	338
48	5U22	BEAM		10	S	X				2 3.250	2 7.125					7 2	6 11	346
44	4U23	APPROACH H.		10	S	X				17.500	6.000					3 5	3 3	96
45	5V10	BACKWALL	E	20		X			9 0.000							9 0	9 0	422
47	6V11	BACKWALL	E	20		X			9 3.000							9 3	9 3	653
72	8V12	COLUMNS		17		X			6 11.000							7 10	7 10	1506
62	5V13	CURTAIN WALL		20		X			6 7.000							6 7	6 7	426
2	4V14	CURTAIN WALL		20		X			7 5.000							7 5	7 5	10
10	5V15	WING		20		X	V	2	4 2.000							4 2	4 2	
		INCREMENT = 6.000 INCH							2 2.000							2 2	2 2	33
28	4V16	WING		20		X	V	2	14 1.000							14 1	14 1	
		INCREMENT = 8.750 INCH							4 7.000							4 7	4 7	175
2	4V17	WING		20		X			7 6.000							7 6	7 6	10
2	4V18	CURTAIN WALL		20		X			7 7.000							7 7	7 7	10
10	5V19	WING		20		X	V	2	4 1.000							4 1	4 1	
		INCREMENT = 5.750 INCH							2 2.000							2 2	2 2	33
28	4V20	WING		20		X	V	2	14 0.000							14 0	14 0	
		INCREMENT = 8.750 INCH							4 6.000							4 6	4 6	173
6	4V21	WING		20		X	V	2	8 7.000							8 7	8 7	
		INCREMENT = 8.000 INCH							7 3.000							7 3	7 3	32
10	W5W1	A.B.WELLS		22		X				18.000	9.125					26 1	26 1	44
		SUPERSTR.																
		SLAB ON SEMI-DEEP																

STATE	PROJ. NO.	SHEET NO.
MO.		200

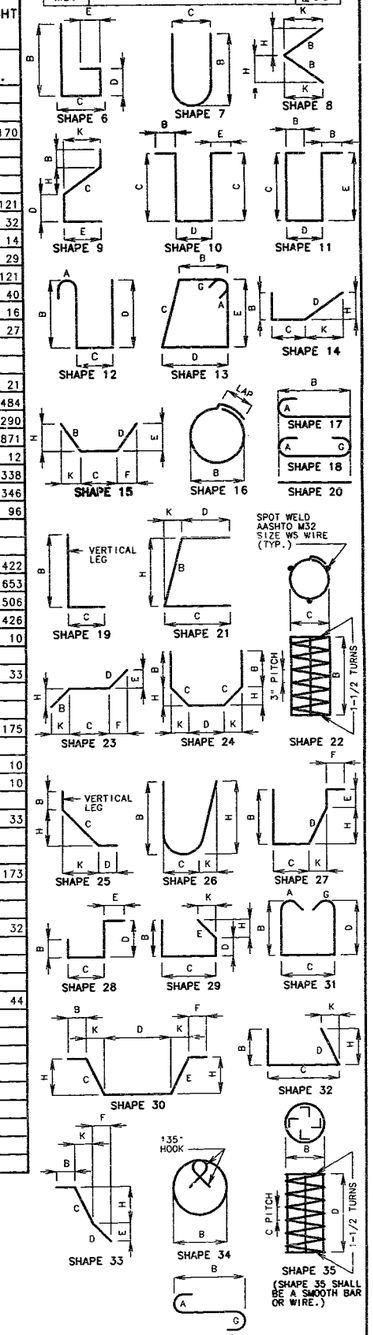

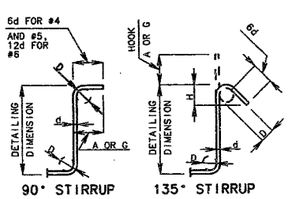

STIRRUP HOOK DIMENSIONS				
GRADES 40 - 50 - 60 KSI				
BAR SIZE	D (IN.)	90° HOOK	135° HOOK	
		HOOK A OR G	HOOK A OR G	APPROX. H
#4	2"	4-1/2"	4-1/2"	3"
#5	2-1/2"	6"	5-1/2"	3-3/4"
#6	4-1/2"	12"	8"	4-1/2"

NOTE: UNLESS OTHERWISE NOTED DIAMETER "D" IS THE SAME FOR ALL BENDS AND HOOKS ON A BAR.

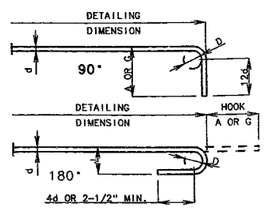

TWO ADDITIONAL #6-V11 ARE INCLUDED IN THE BAR BILL FOR TESTING.

END HOOK DIMENSIONS				
BAR SIZE	D (IN.)	ALL GRADES		
		180° HOOKS	J	90° HOOKS
		A OR G		A OR G
#3	2-1/4"	5"	3"	6"
#4	3"	6"	4"	8"
#5	3-3/4"	7"	5"	10"
#6	4-1/2"	8"	6"	12"
#7	5-1/4"	10"	7"	14"
#8	6"	11"	8"	16"
#9	9-1/2"	15"	11-3/4"	19"
#10	10-3/4"	17"	13-1/4"	22"
#11	12"	19"	14-3/4"	2'-0"
#14	18-1/4"	2'-3"	21-3/4"	2'-7"

NOTE:
ALL STANDARD HOOKS AND BENDS OTHER THAN 180 DEG. TO BE BENT WITH THE SAME PROCEDURE AS FOR 90 DEG. STD. HOOKS.
HOOKS AND BENDS SHALL BE IN ACCORDANCE WITH THE PROCEDURES AS SHOWN ON THIS SHEET.
E = EPOXY COATED REINFORCEMENT.
S = STIRRUP.
X = BAR IS INCLUDED IN SUBSTRUCTURE QUANTITIES.
V = BAR DIMENSIONS VARY IN EQUAL INCREMENTS BETWEEN DIMENSIONS SHOWN ON THIS LINE AND THE FOLLOWING LINE.
NO. EA. = NUMBER OF BARS OF EACH LENGTH.
NOMINAL LENGTHS ARE BASED ON OUT TO OUT DIMENSIONS SHOWN IN BENDING DIAGRAMS AND ARE LISTED FOR FABRICATORS USE. (NEAREST INCH)
ACTUAL LENGTHS ARE MEASURED ALONG CENTERLINE BAR TO THE NEAREST INCH.
PAYWEIGHTS ARE BASED ON ACTUAL LENGTHS.
FOUR ANGLE OR CHANNEL SPACERS ARE REQUIRED FOR EACH COLUMN SPIRAL. SPACERS ARE TO BE PLACED ON INSIDE OF SPIRALS. LENGTH AND WEIGHT OF COLUMN SPIRALS DO NOT INCLUDE SPLICES OR SPACERS.
REINFORCING STEEL (GRADE 60) = FY 60,000 PSI.

NOTE: THIS DRAWING IS NOT TO SCALE. FOLLOW DIMENSIONS.

STD 90.6	REVISED
MAY 1974	OCT. 1991

DETAILED MAR. 1993
CHECKED MAR. 1993

SHEET NO. 28 OF 33.

JACKSON COUNTY

A-5249

166 225

BILL OF REINFORCING STEEL

NO. REQ'D.	MARK NO. (SIZE MARK)	LOCATION	EPOXY (E)	SHAPE NO.	STIRRUP (S)	SUBSTR. (X)	VARIES (V)	NO. EACH	B FT. IN.	C FT. IN.	D FT. IN.	E FT. IN.	F FT. IN.	H FT. IN.	K FT. IN.	NOMINAL LENGTH FT. IN.	ACTUAL LENGTH FT. IN.	WEIGHT LBS.
		ABUTMENT																
		ABUT. NO. 1																
71	8S9	SLAB	E	20					25 2.000							25 2	25 2	4771
28	4S10	SLAB	E	20					25 2.000							25 2	25 2	471
60	5S11	SLAB	E	20					24 9.000							24 9	24 9	1549
30	4S12	SLAB	E	20					24 9.000							24 9	24 9	496
39	5S13	SLAB	E	20					2 6.000							2 6	2 6	102
		ABUT. NO. 3																
30	4S14	SLAB	E	20					21 2.000							21 2	21 2	424
64	8S15	SLAB	E	20					21 2.000							21 2	21 2	3617
50	5S16	SLAB	E	20					24 9.000							24 9	24 9	1291
26	4S17	SLAB	E	20					24 9.000							24 9	24 9	430
39	5S18	SLAB	E	20					2 6.000							2 6	2 6	102
		C.I.P. SLAB																
		OPTION																
336	5S1	SLAB	E	20					39 8.000							39 8	39 8	1 3901
315	5S2	SLAB	E	20					35 10.000							35 10	35 10	1 1773
1130	5S3	SLAB	E	20					41 3.000							41 3	41 3	4 8617
102	5S4	SLAB	E	20			V	2	39 5.000							39 5	39 5	
		INCREMENT =							3 4.000							3 4	3 4	2274
		8.625 INCH																
68	5S5	SLAB	E	20			V	2	39 3.000							39 3	39 3	
		INCREMENT =							3 6.000							3 6	3 6	1516
		13.000 INCH																
64	6S6	SLAB	E	20					60 0.000							60 0	60 0	5768
64	6S7	SLAB	E	20					43 3.000							43 3	43 3	4158
		P/C PANEL																
		OPTION																
48	5S1	SLAB	E	20					39 8.000							39 8	39 8	1986
315	5S2	SLAB	E	20					35 10.000							35 10	35 10	1 1773
678	5S3	SLAB	E	20					41 3.000							41 3	41 3	2 9170
102	5S4	SLAB	E	20			V	2	39 5.000							39 5	39 5	
		INCREMENT =							3 4.000							3 4	3 4	2274
		8.625 INCH																
64	6S6	SLAB	E	20					60 0.000							60 0	60 0	5768
64	6S7	SLAB	E	20					43 3.000							43 3	43 3	4158
608	4S8	SLAB	E	20					3 2.000							3 2	3 2	1286
*48	5C1	S/F CURB	E	20					10 0.000							10 0	10 0	501
*4	5C2	S/F CURB	E	20					28 1.000							28 1	28 1	117
*4	5C3	S/F CURB	E	20					24 1.000							24 1	24 1	100
800	5R1	BARRIER CURB	E	19	S				2 6.000	3.500						2 10	2 8	2225
744	5R2	BARRIER CURB	E	15	S				2 6.125	3.500				2 6.000	3.000	2 10	2 9	2134
716	5R3	BARRIER CURB	E	19	S				17.000	6.000						23	22	1369
716	5R4	BARRIER CURB	E	27	S					6.000	11.125	7.000	12.000	9.125	6.375	3 0	2 10	2116
28	5R5	BARRIER CURB	E	27	S					6.000	11.125	18.000		9.125	6.375	2 11	2 10	83
28	5R6	BARRIER CURB	E	19	S				2 2.500	6.000						2 9	2 7	75
8	5R7	BARRIER CURB	E	27	S					6.000	8.125	18.000		6.625	4.625	2 8	2 7	22
8	5R8	BARRIER CURB	E	19	S				2 1.000	6.000						2 7	2 6	21

BILL OF REINFORCING STEEL

NO. REQ'D.	MARK NO. (SIZE MARK)	LOCATION	EPOXY (E)	SHAPE NO.	STIRRUP (S)	SUBSTR. (X)	VARIES (V)	NO. EACH	B FT. IN.	C FT. IN.	D FT. IN.	E FT. IN.	F FT. IN.	H FT. IN.	K FT. IN.	NOMINAL LENGTH FT. IN.	ACTUAL LENGTH FT. IN.	WEIGHT LBS.
8	5R9	BARRIER CURB	E	19	S				2 3.000	3.500						2 7	2 5	20
24	5R10	BARRIER CURB	E	10	S					2 1.000	7.500					4 10	4 7	115
48	5R11	BARRIER CURB	E	20					5 0.000							5 0	5 0	250
10	5R12	BARRIER CURB	E	20					28 0.000							28 0	28 0	292
2	5R13	BARRIER CURB	E	20					28 9.000							28 9	28 9	60
10	5R14	BARRIER CURB	E	20					24 0.000							24 0	24 0	250
2	5R15	BARRIER CURB	E	20					24 9.000							24 9	24 9	52
58	5R16	BARRIER CURB	E	20					9 9.000							9 9	9 9	590
112	5R17	BARRIER CURB	E	20					34 2.000							34 2	34 2	3991
6	4U24	BARRIER CURB	E	15	S				20.500	22.500	20.500	14.500	14.500	14.500	14.500	5 4	5 3	21
4	5U25	BARRIER CURB	E	15	S				20.500	22.500	20.500	14.500	14.500	14.500	14.500	5 4	5 3	22
6	4U26	BARRIER CURB	E	31	S				18.500	22.500	18.500					5 9	5 7	22
4	5U27	BARRIER CURB	E	31	S				18.500	22.500	18.500					5 9	5 7	23
4	5U28	BARRIER CURB	E	10	S				6.000	2 5.500	7.250					6 0	5 9	24
6	5U100	BARRIER CURB	E	10	S				6.000	2 5.500	14.000					6 7	6 3	39
12	6V22	BARRIER CURB	E	20					3 0.000							3 0	3 0	54
		END OF LIST																

*SLIP FORM OPTION ONLY

TWO ADDITIONAL #4-S14, #8-S15 & #5-R16 ARE INCLUDED IN THE BAR BILL FOR TESTING.

STATE	PROJ. NO.	SHEET NO.
MO.		201

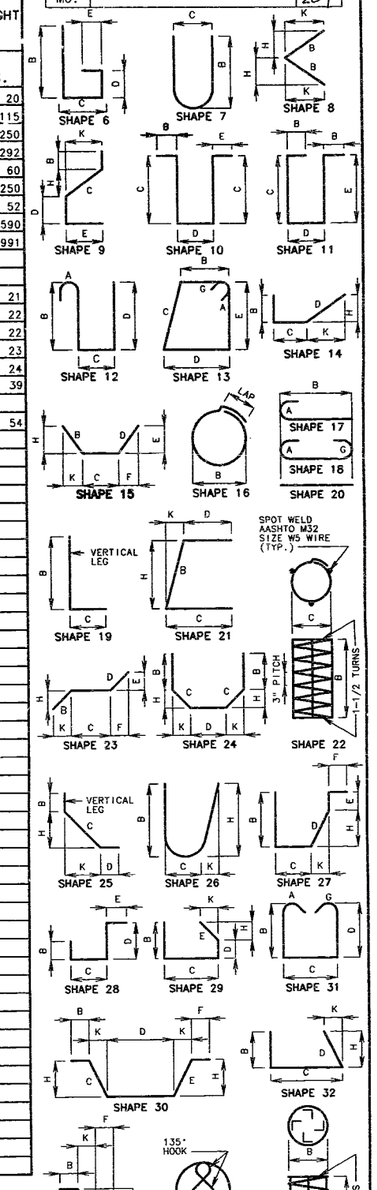

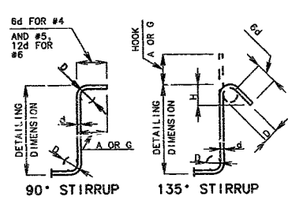

STIRRUP HOOK DIMENSIONS				
GRADES 40 - 50 - 60 KSI				
BAR SIZE	D (IN.)	90° HOOK	135° HOOK	
		HOOK A OR G	HOOK A OR G	APPROX. H
#4	2"	4-1/2"	4-1/2"	3"
#5	2-1/2"	6"	5-1/2"	3-3/4"
#6	4-1/2"	12"	8"	4-1/2"

NOTE: UNLESS OTHERWISE NOTED DIAMETER "D" IS THE SAME FOR ALL BENDS AND HOOKS ON A BAR.

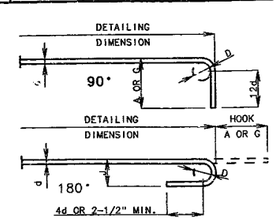

NOTE: THIS DRAWING IS NOT TO SCALE. FOLLOW DIMENSIONS.

END HOOK DIMENSIONS				
BAR SIZE	D (IN.)	ALL GRADES		
		180° HOOKS		90° HOOKS
		A OR G	J	A OR G
#3	2-1/4"	5"	3"	6"
#4	3"	6"	4"	8"
#5	3-3/4"	7"	5"	10"
#6	4-1/2"	8"	6"	12"
#7	5-1/4"	10"	7"	14"
#8	6"	11"	8"	16"
#9	9-1/2"	15"	11-3/4"	19"
#10	10-3/4"	17"	13-1/4"	22"
#11	12"	19"	14-3/4"	2'-0"
#14	18-1/4"	2'-3"	21-3/4"	2'-7"

NOTE:
ALL STANDARD HOOKS AND BENDS OTHER THAN 180 DEG. TO BE BENT WITH THE SAME PROCEDURE AS FOR 90 DEG. STD. HOOKS.
HOOKS AND BENDS SHALL BE IN ACCORDANCE WITH THE PROCEDURES AS SHOWN ON THIS SHEET.
E = EPOXY COATED REINFORCEMENT.
S = STIRRUP.
X = BAR IS INCLUDED IN SUBSTRUCTURE QUANTITIES.
V = BAR DIMENSIONS VARY IN EQUAL INCREMENTS BETWEEN DIMENSIONS SHOWN ON THIS LINE AND THE FOLLOWING LINE.
NO. EA. = NUMBER OF BARS OF EACH LENGTH.
NOMINAL LENGTHS ARE BASED ON OUT TO OUT DIMENSIONS SHOWN IN BENDING DIAGRAMS AND ARE LISTED FOR FABRICATORS USE. (NEAREST INCH)
ACTUAL LENGTHS ARE MEASURED ALONG CENTERLINE BAR TO THE NEAREST INCH.
PAYWEIGHTS ARE BASED ON ACTUAL LENGTHS.
FOUR ANGLE OR CHANNEL SPACERS ARE REQUIRED FOR EACH COLUMN SPIRAL. SPACERS ARE TO BE PLACED ON INSIDE OF SPIRALS. LENGTH AND WEIGHT OF COLUMN SPIRALS DO NOT INCLUDE SPLICES OR SPACERS.
REINFORCING STEEL (GRADE 60) = FY 60,000 PSI.

STD 90.8 REVISED MAY 1974 OCT. 1991

DETAILED MAR. 1993
CHECKED MAR. 1993

SHEET NO. 29 OF 33.

JACKSON COUNTY

A-5249

167 226

STATE	PROJ. NO.	SHEET NO.
MO.		202

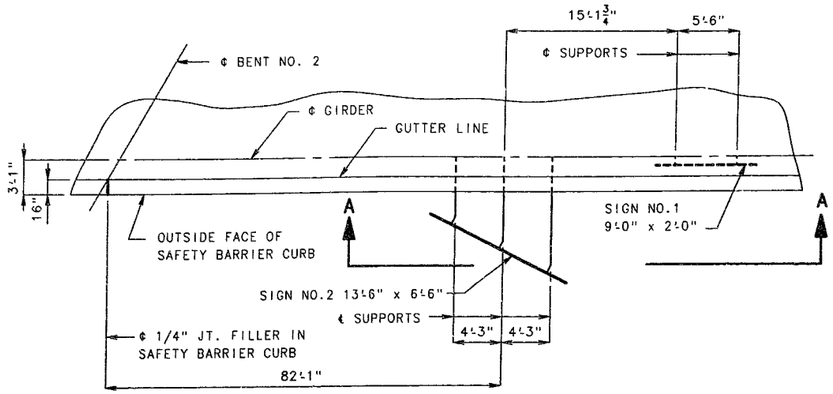

PART PLAN SHOWING LOCATION OF SIGNS NO 1 & 2

(EAST SIDE OF BRIDGE OVER WBL RTE. I-435)

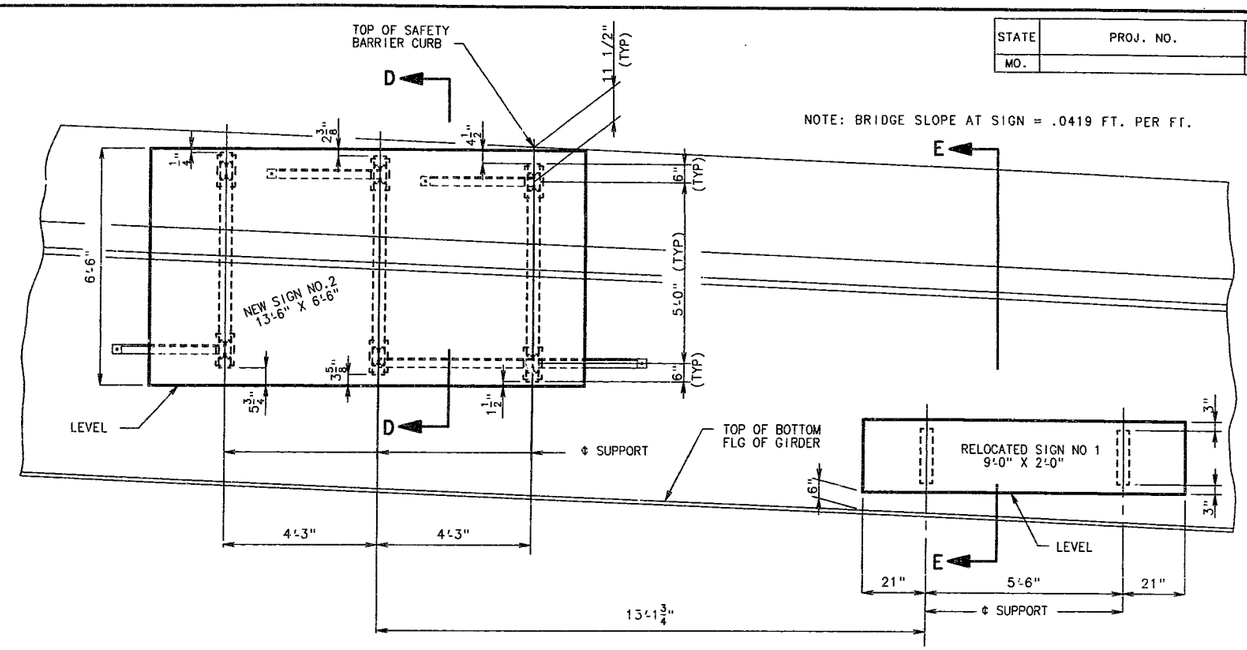

PART ELEVATION A-A

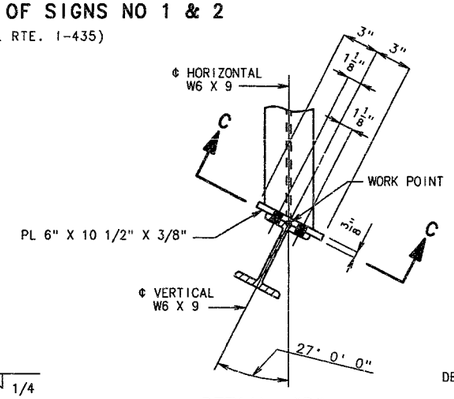

DETAIL "B"

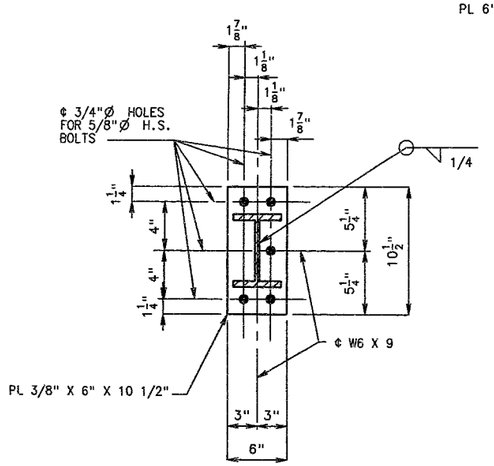

SECTION C-C

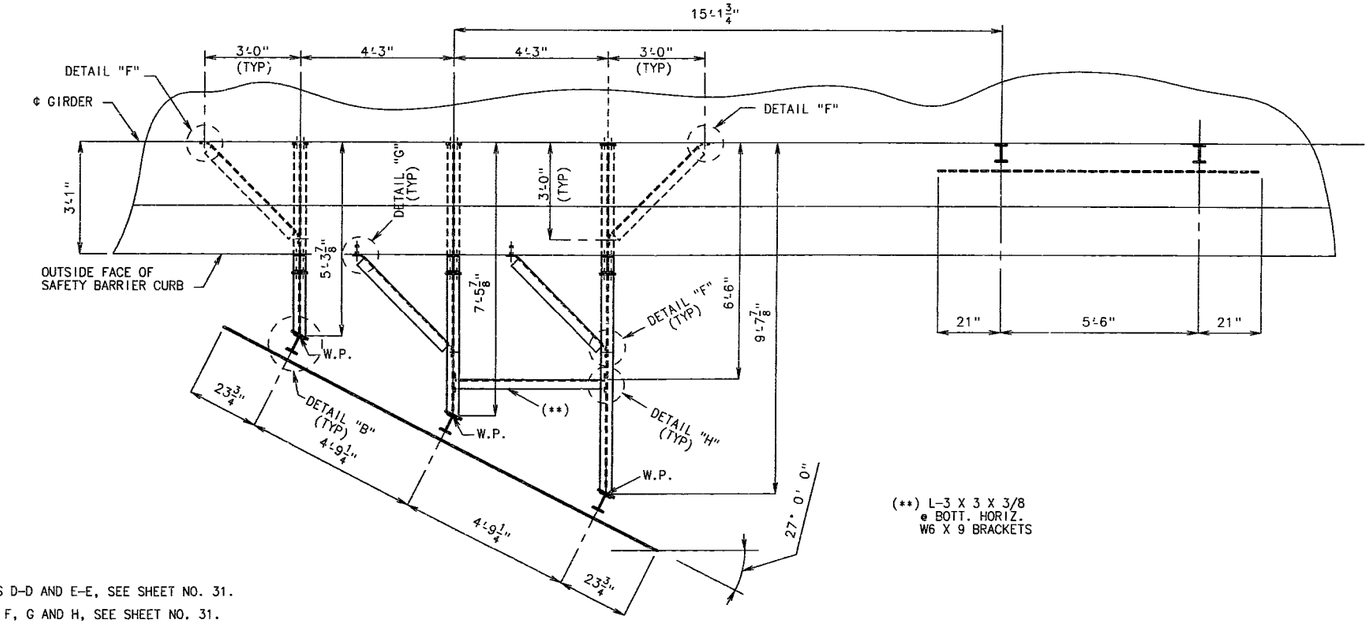

(**) L-3 X 3 X 3/8
@ BOTT. HORIZ.
W6 X 9 BRACKETS

PART PLAN SHOWING
DIMENSIONS AND HORIZONTAL BRACING

GENERAL NOTES

CENTER AND LEVEL SIGNS ON BRACKETS.

ALL BOLTS, NUTS AND WASHERS SHALL BE GALVANIZED.

CONCRETE ANCHORS SHALL BE NON-DRILLING EXPANSION TYPE. THEY SHALL HAVE A CERTIFIED CONCRETE PULLOUT STRENGTH (ULTIMATE LOAD) OF AT LEAST 12,100 POUNDS IN 4000 PSI CONCRETE. THE HOLE SHALL BE PRE-DRILLED WITH A CONVENTIONAL CARBIDE MASONRY BIT.

ALL STRUCTURAL STEEL SHALL BE A.S.T.M. A36, GALVANIZED.

THE COST OF FURNISHING AND ERECTING THE SIGN SUPPORTS, INCLUDING THE CONCRETE ANCHORS COMPLETE-IN-PLACE, SHALL BE PAID FOR AS FABRICATED SIGN SUPPORT BRACKETS, LUMP SUM.

NOTE:

FOR SECTIONS D-D AND E-E, SEE SHEET NO. 31.

FOR DETAILS F, G AND H, SEE SHEET NO. 31.

SIGN SUPPORT BRACKETS FOR SIGNS NO. 1 & 2

DETAILED SEPT. 1992
CHECKED AUG. 1993

NOTE: THIS DRAWING IS NOT TO SCALE. FOLLOW DIMENSIONS.

JACKSON COUNTY

A-5249

168 227

STATE	PROJ. NO.	SHEET NO.
MO.		203

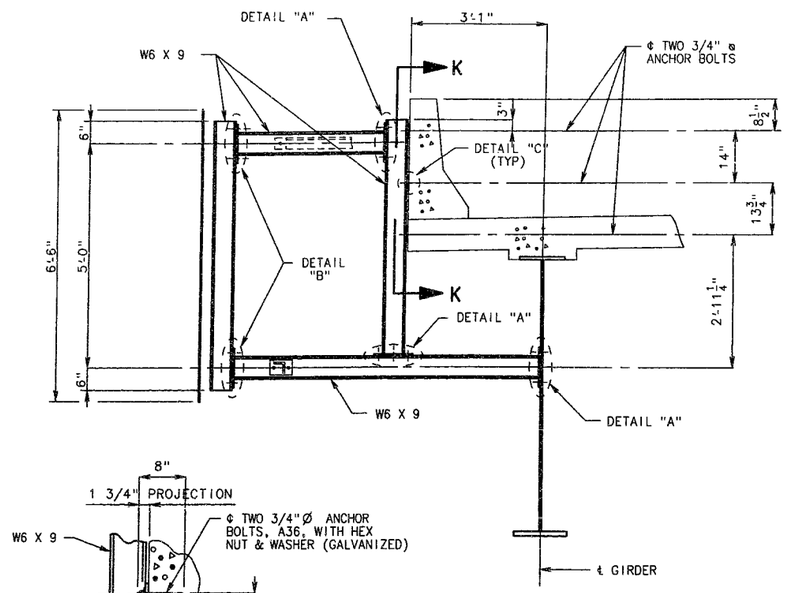

SECTION D-D

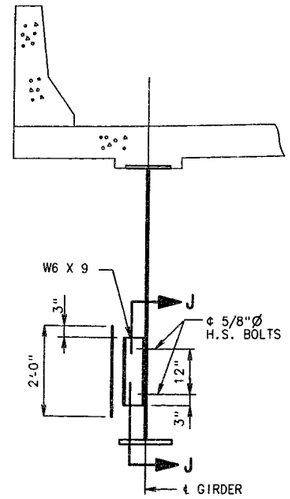

SECTION E-E

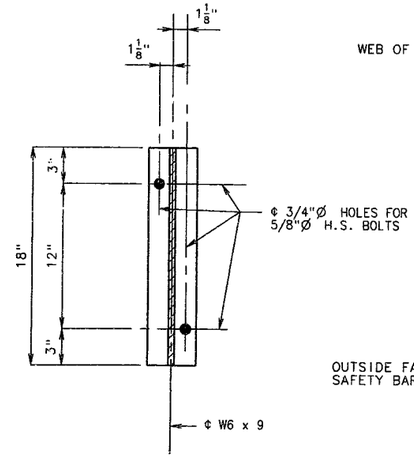

SECTION J-J

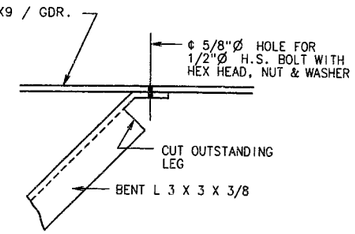

DETAIL "F"

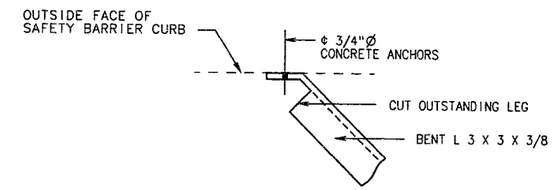

DETAIL "G"

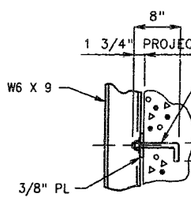

DETAIL "C"

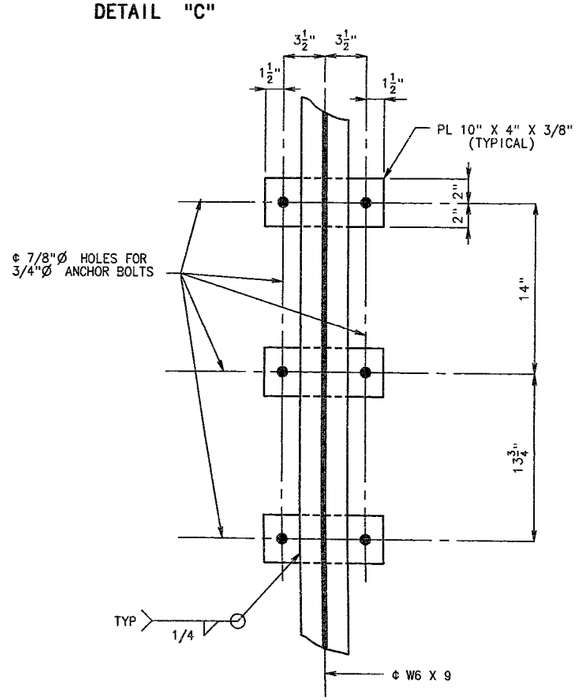

SECTION K-K

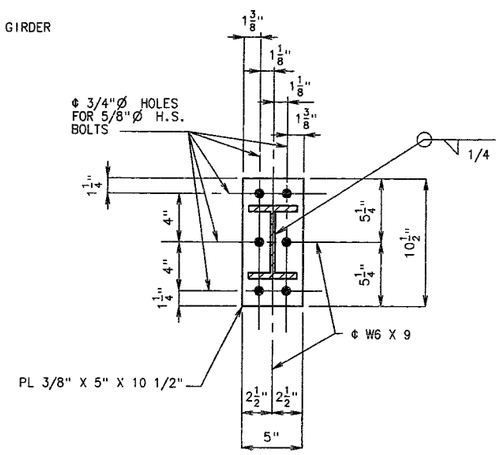

DETAIL "A"

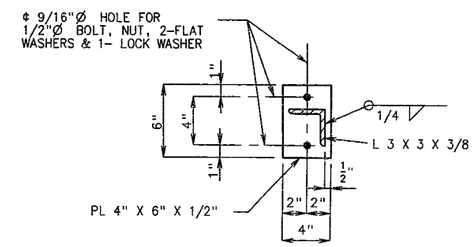

SECTION M-M

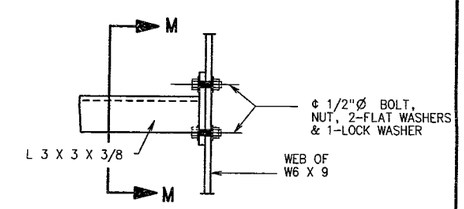

DETAIL "H"

NOTE:

FOR LOCATION OF SECTIONS D-D AND E-E, SEE SHEET NO 30.
FOR LOCATION OF DETAILS "F", "G" AND "H", SEE SHEET NO 30.
FOR DETAIL "B", SEE SHEET NO. 30.

DETAILED SEPT.1992
CHECKED AUG.1993

NOTE: THIS DRAWING IS NOT TO SCALE. FOLLOW DIMENSIONS.

JACKSON COUNTY

A-5249

STATE	PROJ. NO.	SHEET NO.
MO.		204

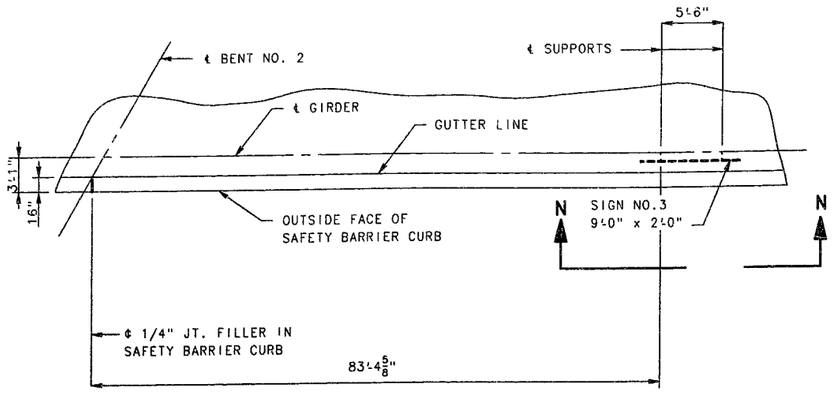

PART PLAN SHOWING LOCATION OF SIGN NO. 3

(WEST SIDE OF BRIDGE OVER EBL RTE. I-435)

NOTE: BRIDGE SLOPE AT SIGN = .02077 FT. PER FT.

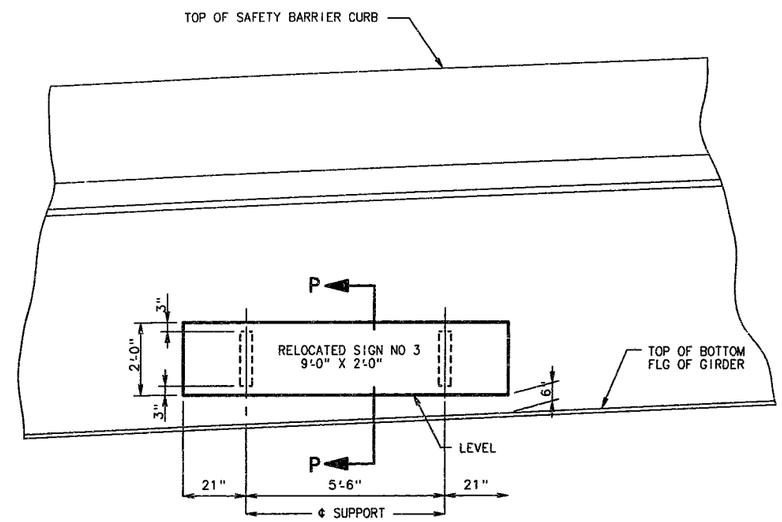

PART ELEVATION N-N

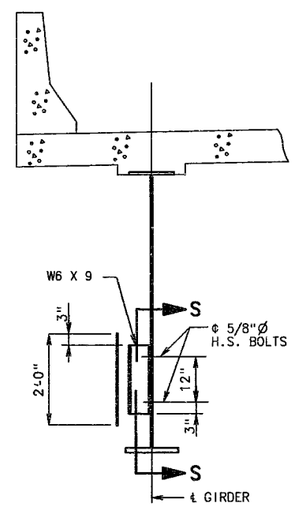

SECTION P-P

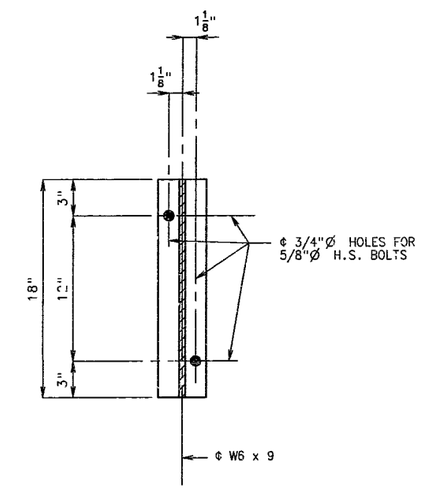

SECTION S-S

SIGN SUPPORT BRACKET
FOR SIGN NO. 3

DETAILED SEPT. 1992
CHECKED AUG. 1993

NOTE: THIS DRAWING IS NOT TO SCALE. FOLLOW DIMENSIONS.

JACKSON COUNTY A-5249

70 327

STATE	PROJ. NO.	SHEET NO.
MO.		205

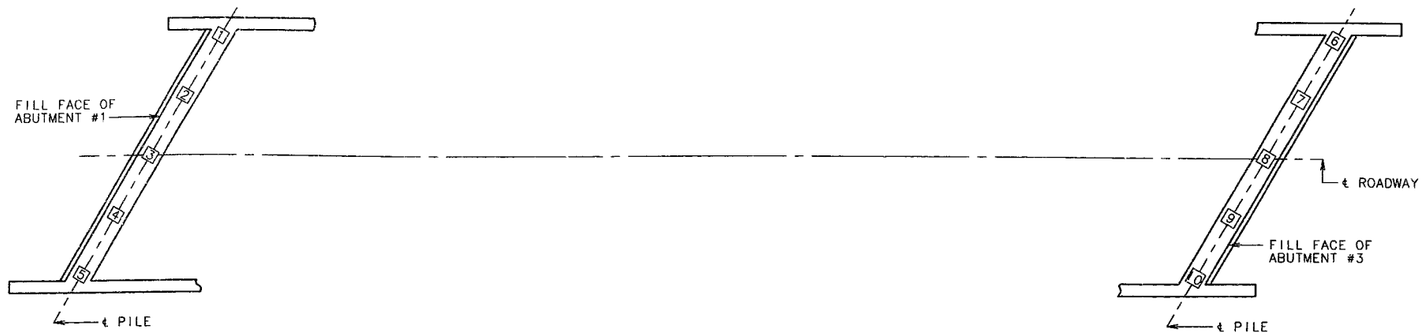

PART PLAN SHOWING
PILE NUMBERING FOR RECORDING
"AS BUILT PILE" DATA

"AS BUILT PILE" DATA

PILE NO.	LENGTH IN PLACE (FT.)	COMPUTED BEARING (TONS)	REMARKS
			ABUTMENT #1
1			
2			
3			
4			
5			
			ABUTMENT #3
6			
7			
8			
9			
10			

"AS BUILT PILE" DATA

PILE NO.	LENGTH IN PLACE (FT.)	COMPUTED BEARING (TONS)	REMARKS

"AS BUILT PILE" DATA

PILE NO.	LENGTH IN PLACE (FT.)	COMPUTED BEARING (TONS)	REMARKS

NOTE: INDICATE IN REMARK C
A.) IF PILIN WERE DR
B.) PILE BAT/ER IF OT
C.) TYPE OF PIL!NG US

NOTE: THIS SHEET TO BE

MISC. PILES IN PLA. A
PILES IN PLACE
MAY 1992
REVISED:

DETAILED MAR. 1993
CHECKED MAR. 1993

NOTE: THIS DRAWING IS NOT TO SCALE. FOLLOW DIMENSIONS.

SHEET NO. 33 OF 33.

JACKSON

MISSOURI HIGHWAY AND TRANSPORTATION COMMISSION

STATE	PROJ NO	SHEET NO
MO	J4I0807	173
SEC/SUR 34	TWP 48N	RGE 33W

FINAL PLANS

(151'-151') CONT. COMP. ℞ GIRDER SPANS WITH SEMI-DEEP ABUTMENTS

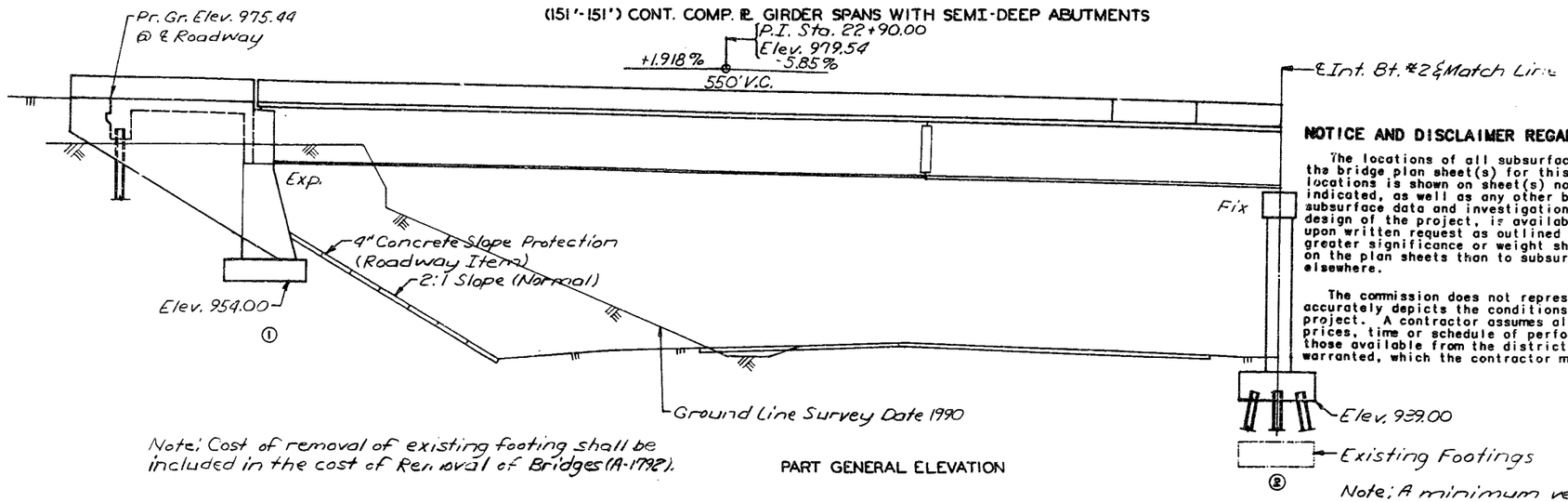

Note: Cost of removal of existing footing shall be included in the cost of Removal of Bridges (A-1792).

PART GENERAL ELEVATION

NOTICE AND DISCLAIMER REGARDING BORING LOG DATA

The locations of all subsurface boring for this structure are shown on the bridge plan sheet(s) for this structure. Boring data for the numbered locations is shown on sheet(s) no. 3. The boring data for all locations indicated, as well as any other boring logs or other factual records of subsurface data and investigations performed by the department for the design of the project, is available from the district materials engineer upon written request as outlined in the project special provisions. No greater significance or weight should be given to the boring data depicted on the plan sheets than to subsurface data available from the district or elsewhere.

The commission does not represent or warrant that any such boring data accurately depicts the conditions to be encountered in constructing this project. A contractor assumes all risks it may encounter in basing its bid prices, time or schedule of performance on the boring data depicted here or those available from the district, or on any other documentation not expressly warranted, which the contractor may obtain from the commission.

Note: A minimum vertical clearance of 15'-0" from crown of existing lanes and a minimum lateral lateral clearance of 40'-0" centered on existing lanes shall be maintained during construction.

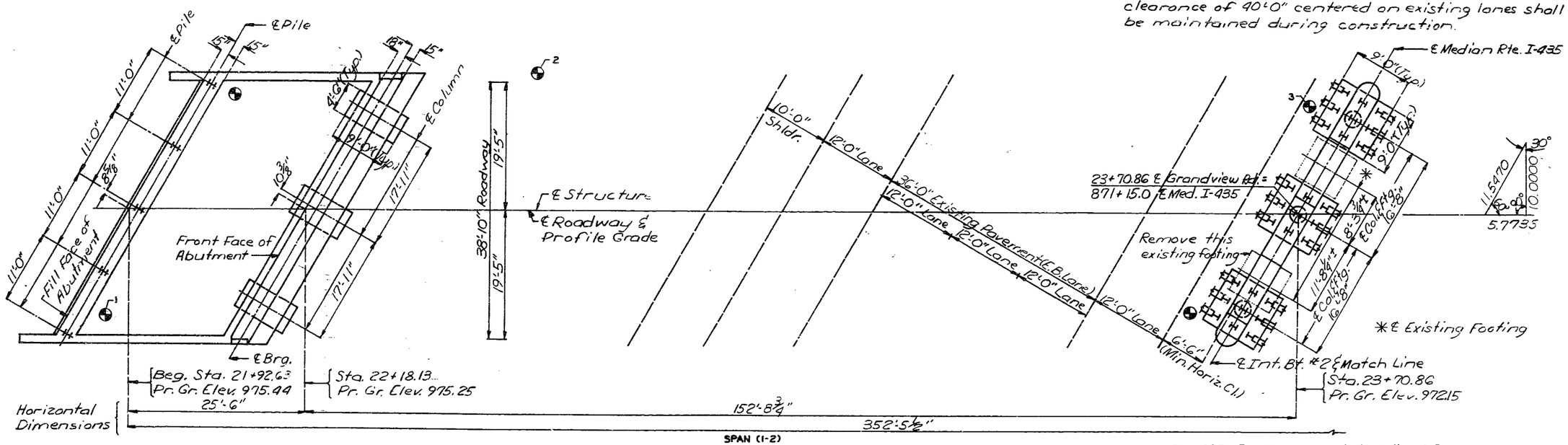

SPAN (1-2)
PART PLAN

Note: ⊕ Indicates location of borings. Boring Data for all locations is available upon request from the District Office. Boring data for numbered locations is detailed on sheet No. 3

For General Notes, Estimated Quantities & Pile Data see sheet No. 9.

CURVE DATA GRANDVIEW RD.

P.I. 21.19.20	P.I. 28+04.32
Δ = 60°00' Rt.	Δ = 14°20' Rt
R = 150'	D = 12°
T = 86.60'	T = 60.16'
L = 157.08'	L = 119.44'
S.E. = Var.	S.E. = 0.02%
Ls = 150'	R = 478.3 Cord

B.M. Elev. 977.85 P.K. on parapet Abut. #1 S.E. corner Br. A-5249 Sta. 21+78 ±, 38.5' ± Rt.

BRIDGE: GRANDVIEW ROAD UNDERPASS

STATE ROAD: INTERSTATE ROUTE 435

IN KANSAS CITY

PROJECT NO. **STA.** 871+15.0

JOB NO. J4I0807 **RTE.** I-435

JACKSON **COUNTY**

DATE 3/1/94

STD. 504.00
STD. 605.10
STD. 609.00
STD. 706.35
STD. 611.60
A-5249

DESIGNED JUN. 1992
DETAILED JUN. 1992
CHECKED July 1992

Note: This drawing is not to scale. Follow dimensions.

Sheet No. 1 of 33.

188 172

STATE	PROJ NO	SHEET NO
MO	J4I0807	174

FINAL PLANS

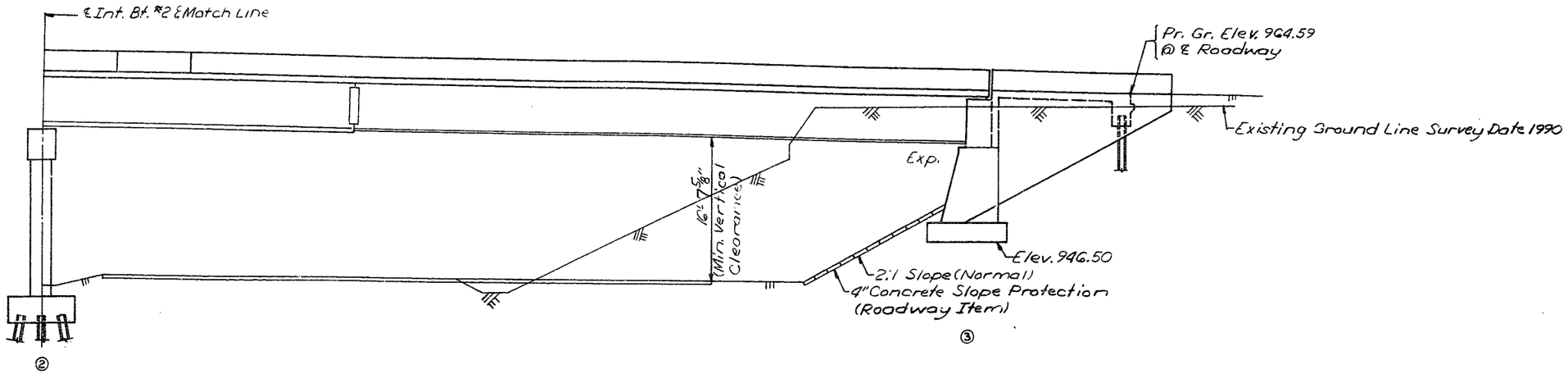

PART GENERAL ELEVATION

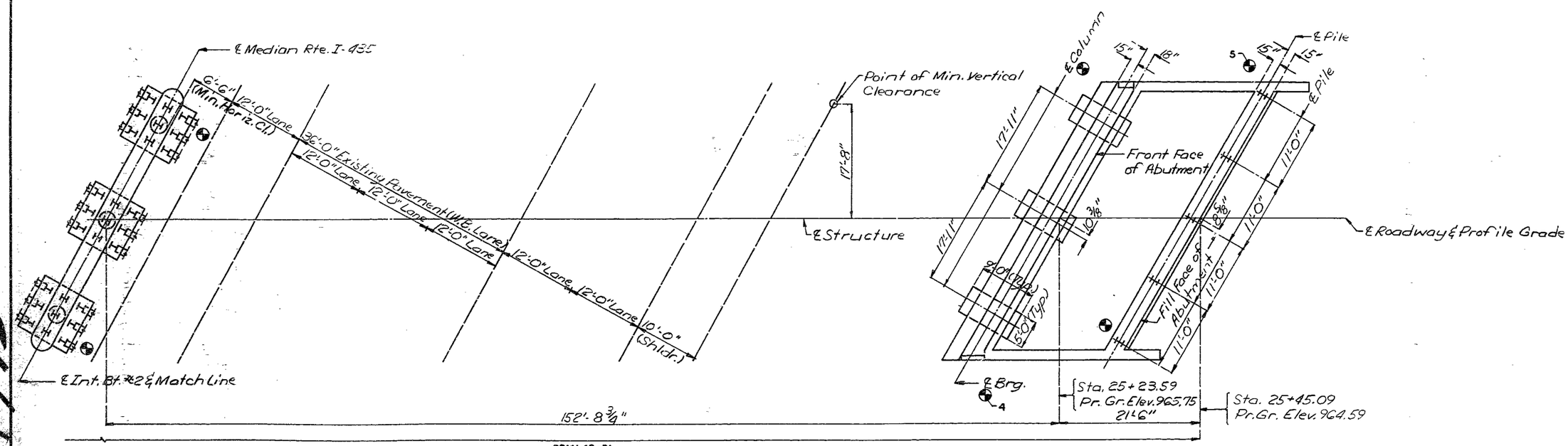

SPAN (2-3)
PART PLAN

Note: ⊕ Indicates location of borings. Boring Data for all locations is available upon request from the District Office.
Boring data for numbered locations is detailed on sheet No. 3

TPG 173

DETAILED Jun. 1992
CHECKED July 1992

Note: This drawing is not to scale. Follow dimensions.

Sheet No. 2 of 33.

JACKSON COUNTY

A-5249

STATE	PROJ. NO.	SHEET NO.
MO.	J4I0807	176

FINAL PLANS

FINAL QUANTITIES

ITEM		SUBSTR.	SUPERSTR.	TOTAL
REMOVAL OF BRIDGES (A-1792)	LUMP SUM			1
CLASS 1 EXCAVATION	CU. YD.	239		239
BRIDGE APPROACH SLAB(BRIDGE)	SQ. YD.		221	221
STRUCTURAL STEEL PILE (10 IN.)	LIN. FT.	493		493
PRE-BORE FOR PILING	LIN. FT.	398		398
CLASS B CONCRETE (SUBSTR.)	CU. YD.	274.2		274.2
SLAB ON STEEL	SQ. YD.		1407	1407
** SAFETY BARRIER CURB	LIN. FT.		726	726
SLAB ON SEMI-DEEP ABUTMENT	SQ. YD.		217	217
LAMINATED NEOPRENE BRG. PADS (STEEL STRUCTURES)	EACH		15	15
PREFORMED COMPRESSION EXP. JT. SEAL (4.5")	LIN. FT.		90	90
REINFORCING STEEL (BRIDGES)	POUND	40940		40940
REINFORCING STEEL (EPOXY COATED)	POUND	2500		2500
FABRICATED STRUCTURAL CARBON STEEL (PLT GDR)	POUND		263930	263930
FABRICATED STEEL SIGN SUPPORT BRACKETS(STEEL)	LUMP SUM			1
FABRICATED STR. LOW ALLOY STEEL (PLT GDR) A-572	POUND		189590	189590
SLAB DRAINS	EACH		16	16
CONDUIT SYSTEM ON STRUCTURE	LUMP SUM			1
CONTINGENT ITEM				
50401 FOUNDATION TEST HOLES	LIN. FT.	24		24

NOTE: THE COST OF PAINTING STRUCTURAL STEEL SHALL BE INCLUDED IN PRICE BID FOR FABRICATED STRUCTURAL STEEL.

ALL CONCRETE AND REINFORCING STEEL BELOW TOP OF SLAB AND ABOVE CONSTRUCTION JOINT UNDER SLAB IN SEMI-DEEP ABUTMENTS ARE INCLUDED IN SUPERSTRUCTURE QUANTITIES FOR SLAB ON SEMI-DEEP ABUTMENTS.

THE PRESTRESSED PANEL QUANTITIES ARE NOT INCLUDED IN THE TABLE OF ESTIMATED QUANTITIES FOR ALTERNATE SLAB.

** SAFETY BARRIER CURB SHALL BE ~~CAST IN PLACE~~ OPTION OR SLIP-FORM OPTION.

ESTIMATED QUANTITIES FOR ALTERNATE SLABS

TYPE OF SLABS	SLAB ON STEEL	
	REINF.(LBS.) EPOXY	CONC. (CU. YDS.)
~~CAST-IN-PLACE CONVENTIONAL FORMS~~	~~88010~~	~~347.7~~
PRECAST PANEL FORMS	56420	257.3

NOTE: THE TABLE OF ESTIMATED QUANTITIES FOR ALTERNATE SLABS REPRESENTS THE QUANTITIES USED BY THE STATE IN PREPARING THE COST ESTIMATE FOR CONCRETE SLABS. VARIATIONS MAY BE ENCOUNTERED IN THESE ESTIMATED QUANTITIES, BUT THESE VARIATIONS CANNOT BE USED FOR AN ADJUSTMENT IN THE CONTRACT UNIT PRICE PER SQUARE YARD OF ALTERNATE SLAB USED.

SEE SPECIAL PROVISIONS FOR ALTERNATE METHODS OF FORMING SLABS.

PRECAST PANEL QUANTITES ARE BASED ON SKEWED END PANELS.

PILE & FOOTING DATA

LOCATION			1 APP.	1 BRG.	2	3 BRG.	3 APP.
BEARING PILE	PILE TYPE AND SIZE		HP10x42		HP10x42		HP10x42
	NUMBER		5		27		5
	APPROXIMATE LENGTH	FT.	(1)		13 ~~12~~		9 ~~11~~
	DESIGN BEARING	TONS	40		52		34
	HAMMER ENERGY REQUIRED	FT.-LBS.	8,800				7,400
SPREAD FOOTING	FOUNDATION MATERIAL			ROCK		ROCK	
	DESIGN BEARING	TONS/SQ.FT.		6.7		5.8	

MINIMUM ENERGY REQUIREMENT OF HAMMER IS BASED ON PLAN LENGTH AND DESIGN BEARING VALUE OF PILES.
ALL PILE SHALL BE DRIVEN TO PRACTICAL REFUSAL.
PREBORE FOR PILES AT BENTS 1, 2 & 3 TO ELEVATIONS (2), 928.00 AND 951.00 RESPECTIVELY.

(1) ~~11~~ 9'LT., ~~15~~ 14'RT.

(2) 961.50(LT.), 957.00(RT.)

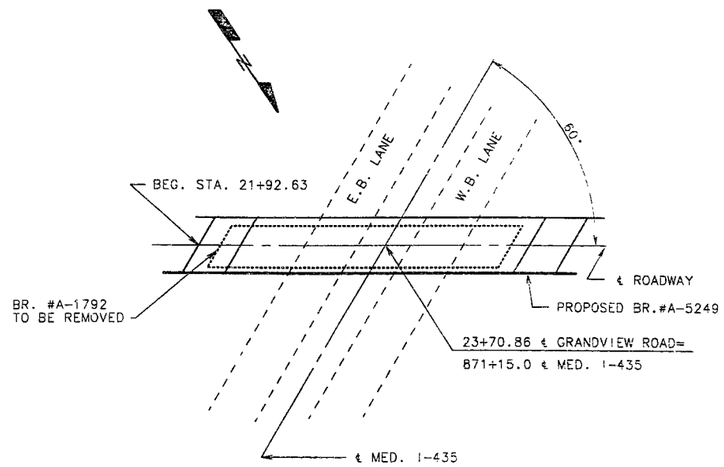

LOCATION SKETCH

GENERAL NOTES:

DESIGN SPECIFICATIONS: A.A.S.H.T.O.-1992
LOAD FACTOR DESIGN
SEISMIC PERFORMANCE CATEGORY A

DESIGN LOADING
HS20-44, MODIFIED 24,000# TANDEM AXLE
35#/SQ.FT. FUTURE WEARING SURFACE
EARTH 120#/CU. FT. EQUIVALENT FLUID PRESSURE 45#/CU. FT.
FATIGUE STRESS - CASE II

DESIGN UNIT STRESSES:
CLASS B CONCRETE (SUBSTRUCTURE) F'C=3,000 PSI
CLASS B1 CONCRETE (SAFETY BARRIER CURB) F'C=4,000 PSI
CLASS B2 CONCRETE (SUPERSTRUCTURE, EXCEPT SAFETY BARRIER CURB) F'C=4,000 PSI
REINFORCING STEEL (GRADE 60) FY=60,000 PSI
STRUCTURAL CARBON STEEL FY=36,000 PSI
STRUCTURAL STEEL (A.S.T.M. A572) GRADE 50 FY=50,000 PSI
STEEL PILE FB=9000 PSI
FOR PRECAST PRESTRESSED PANEL STRESSES, SEE SHEET 19.

FABRICATED STEEL CONNECTIONS: FIELD CONNECTIONS, HIGH STRENGTH BOLTS 3/4"Ø, HOLES 13/16"Ø, EXCEPT AS NOTED.
HIGH STRENGTH BOLTS, NUTS AND WASHERS WILL BE SAMPLED FOR QUALITY ASSURANCE AS SPECIFIED IN STANDARD SPECIFICATION 106.

JOINT FILLER: ALL JOINT FILLER SHALL MEET THE REQUIREMENTS OF STD. SPEC. 1057.2.4, EXCEPT AS NOTED.

REINFORCING STEEL: MINIMUM CLEARANCE TO REINFORCING STEEL SHALL BE 1 1/2", UNLESS OTHERWISE SHOWN.
ALL REINFORCING BARS IN TOPS OF SUBSTRUCTURE BEAMS OR CAPS SHALL BE SPACED TO CLEAR ANCHOR BOLTS FOR BEARING BY AT LEAST $\frac{1}{2}$"

PAINT: SYSTEM F SHOP COATS (GRAY) IN ACCORDANCE WITH THE SPECIAL PROVISIONS. NO FIELD PAINTING EXCEPT FOR TOUCH UP.

SEE ROADWAY PLANS FOR REMOVAL, STORAGE AND INSTALLATION OF LIGHT FIXTURE SUPPORTS.

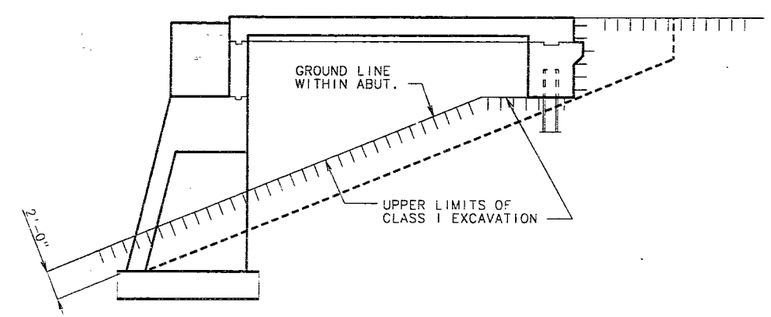

GROUND LINE AND PILING IN ABUTMENTS

NOTE: IN NO CASE SHALL THE EARTH WITHIN ABUTMENTS NO.1 AND 3 BE ABOVE THE GROUND LINE SHOWN. FORMS SUPPORTING ABUTMENT SLAB MAY BE LEFT IN PLACE.

DETAILED JUN. 1992
CHECKED JULY 1992

NOTE: THIS DRAWING IS NOT TO SCALE. FOLLOW DIMENSIONS.

JACKSON COUNTY A-5249

FINAL 176

STATE	PROJ. NO.	SHEET NO.
MO.	J4I0807	172

FINAL PLANS

NOTE: FOR LOCATION OF ELEVATION A-A & B-B SEE SHEET NO. 5.

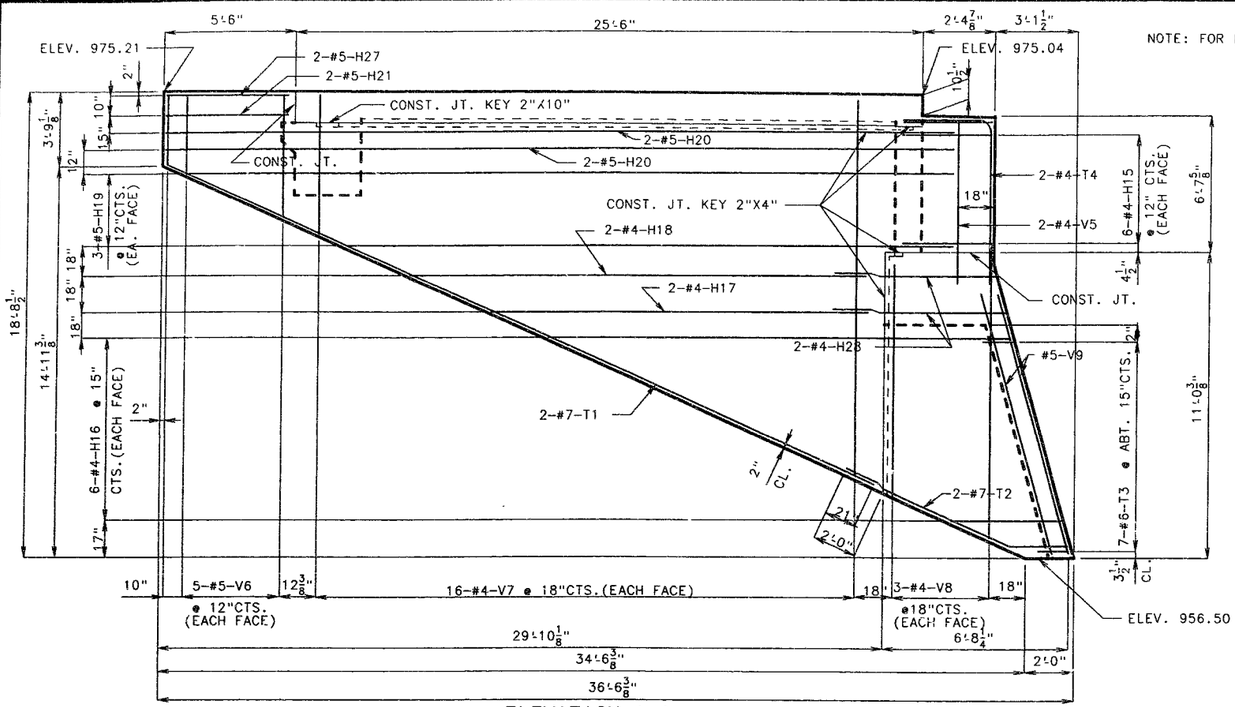

ELEVATION A-A

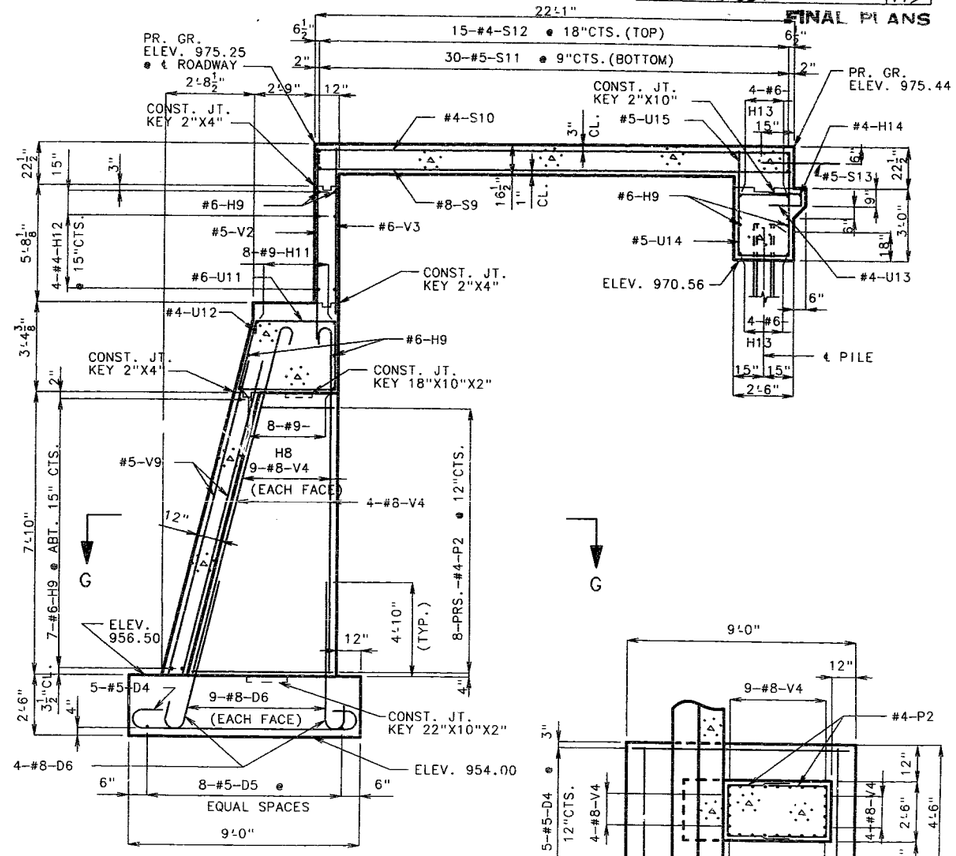

SECTION THRU ℄ ROADWAY (NORMAL TO BENT)

NOTE: FOR DETAILS AND REINFORCEMENT OF BARRIER CURB SEE SHEET NO. 24. #5-R BARS MUST BE IN PLACE BEFORE SLAB IS POURED.

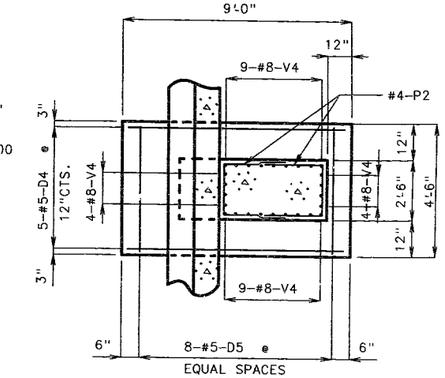

NOTE: REINFORCING STEEL IN APRON WALL NOT SHOWN FOR CLARITY.

SECTION G-G

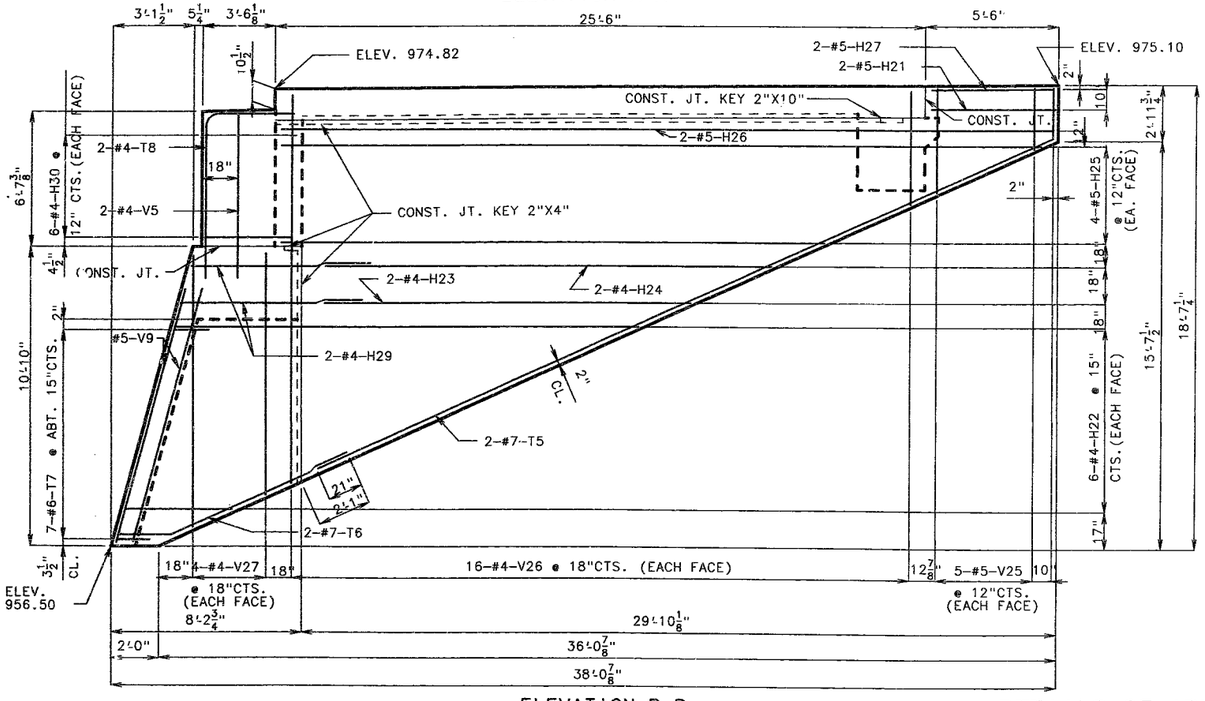

ELEVATION B-B

SUBSTRUCTURE QUANTITY TABLE FOR BENT NO.1

ITEM		QUANTITY
CLASS 1 EXCAVATION	CU. YD.	120
STRUCTURAL STEEL PILE(10")	LIN. FT.	88
PRE-BORE FOR PILING	LIN. FT.	55
CLASS B CONCRETE(SUBSTRUCTURE)	CU. YD.	104.4
REINFORCING STEEL (BRIDGES)	LBS.	14300
REINFORCING STEEL (EPOXY COATED)	LBS.	1400
FOUNDATION TEST HOLES	LIN. FT.	12

NOTE: WORK THIS TABLE WITH ESTIMATED QUANTITIES AS SHOWN ON SHEET NO. 4.

DETAILED MAY 1992
CHECKED JULY 1992

NOTE: THIS DRAWING IS NOT TO SCALE. FOLLOW DIMENSIONS.

DETAILS OF ABUTMENT NO. 1

JACKSON COUNTY

A-5249

894175

STATE	PROJ. NO.	SHEET NO.
MO.	J4I0807	181

FINAL PLANS

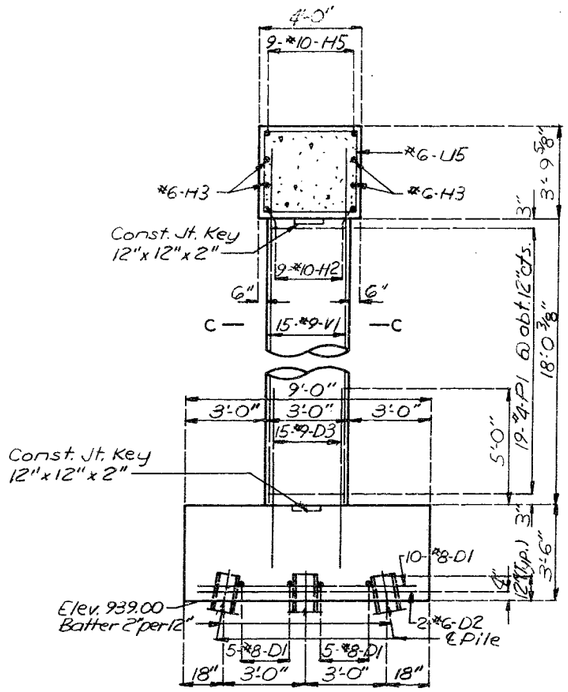

SECTION A-A

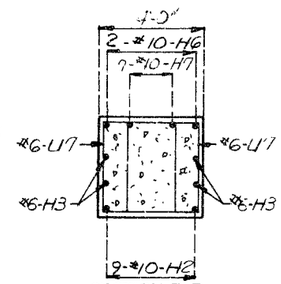

SECTION B-B

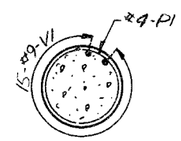

SECTION C-C

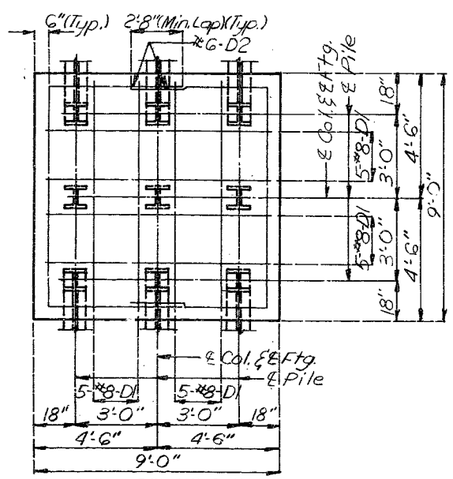

PLAN OF FOOTING SHOWING REINFORCEMENT

Note: For Detail of Pile Splice see sheet No. 6.

Note: For location of Section B-B see sheet No. 8.
For details of Intermediate Bent No. 2 not shown see sheet No. 8.

SUBSTRUCTURE QUANTITY TABLE FOR BENT NO. 2		
ITEM		QUANTITY
Class 1 Excavation	Cu. Yds.	45
Structural Steel Pile (10")	Lin. Ft.	336
Pre-Lure For Piling	Lin. Ft.	297
Class B Concrete (Substructure)	Cu. Yds	71.1
Reinforcing Steel	Lbs.	13620

Note: Work this table with estimated quantities as shown on sheet No. 4.

DETAILS OF INTERMEDIATE BENT NO. 2

DETAILED JUN. 1992
CHECKED July 1992

Note: This drawing is not to scale. Follow dimensions.

JACKSON COUNTY

A-5249

2096/176

QUALITY REPRO

STATE	PROJ. NO.	SHEET NO.
MO.	J4I0807	184

FINAL PLANS

NOTE: FOR DETAILS AND REINFORCEMENT OF BARRIER CURB SEE SHEET NO. 24. #5-R BARS MUST BE PLACED BEFORE SLAB IS POURED.

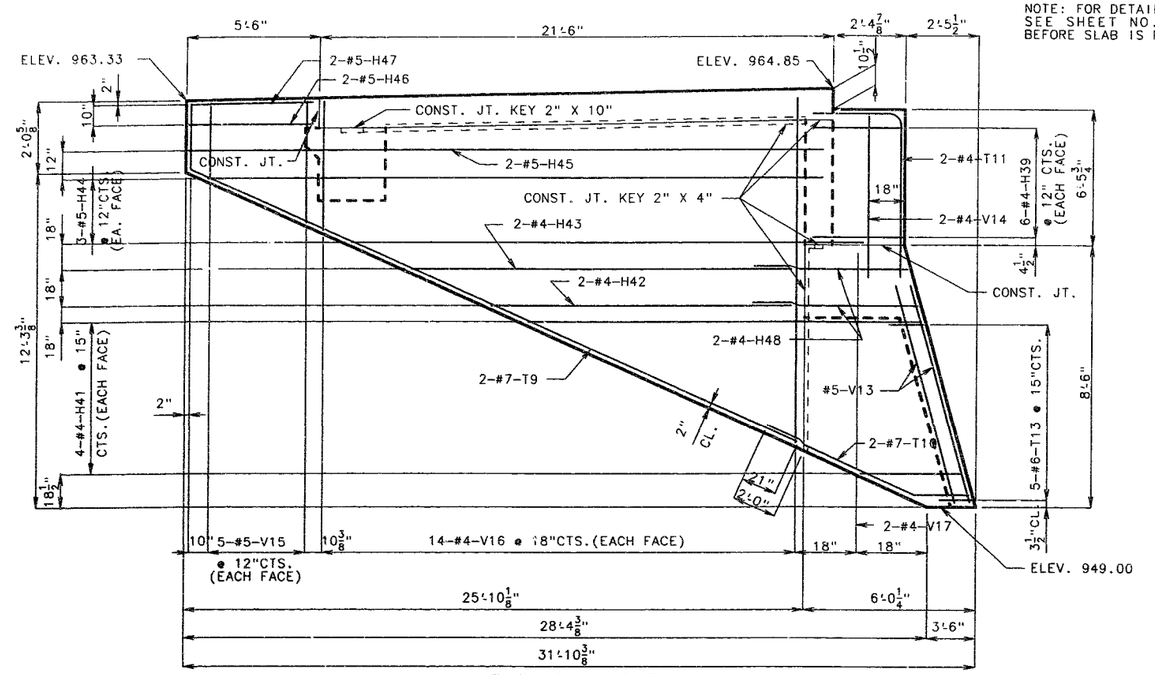

ELEVATION E-E

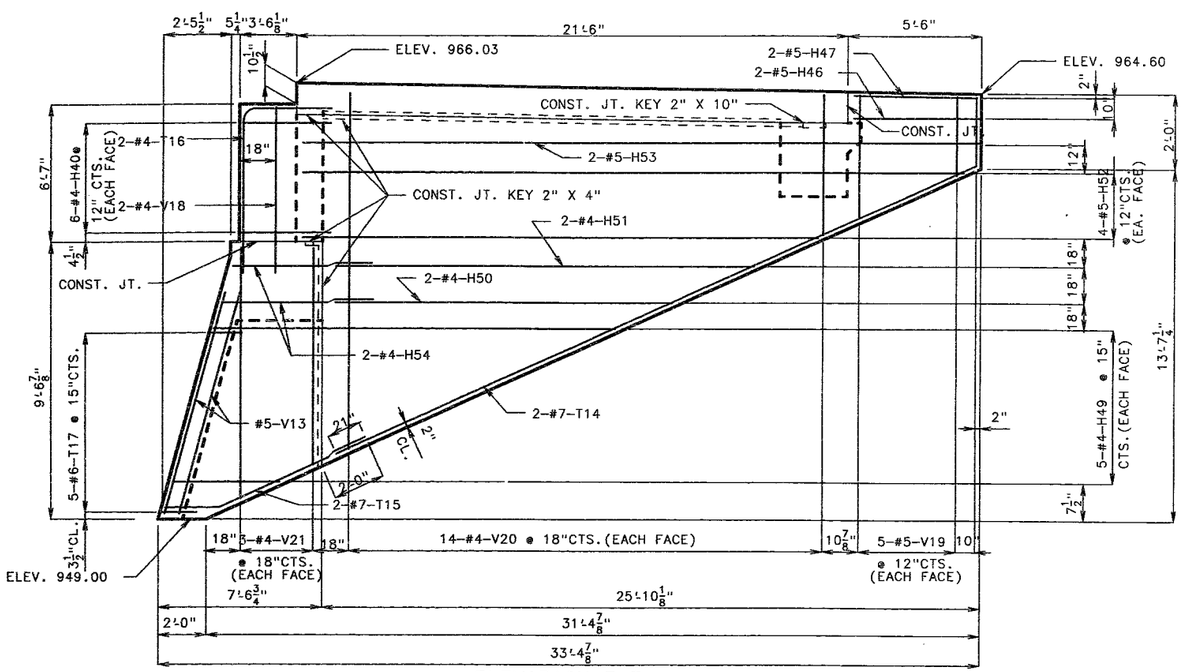

ELEVATION F-F

NOTE: FOR LOCATION OF ELEVATIONS E-E & F-F SEE SHEET NO. 10.

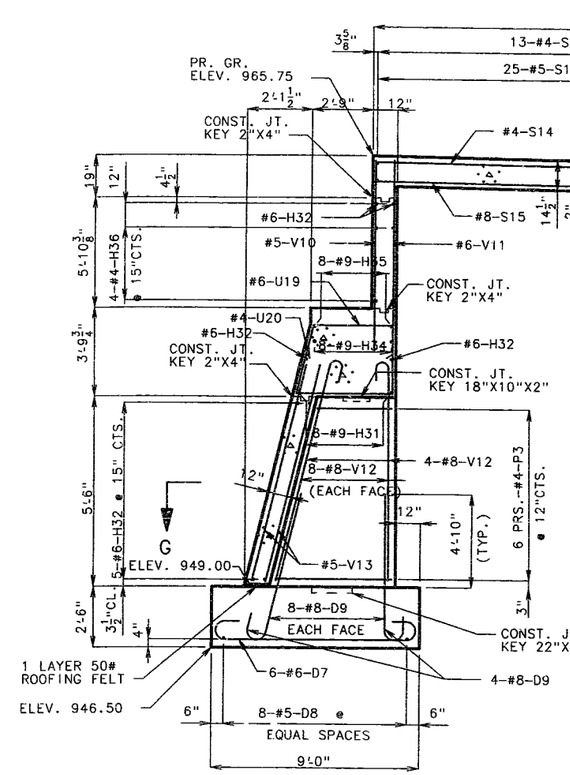

SECTION THRU ℄ ROADWAY (NORMAL TO BENT)

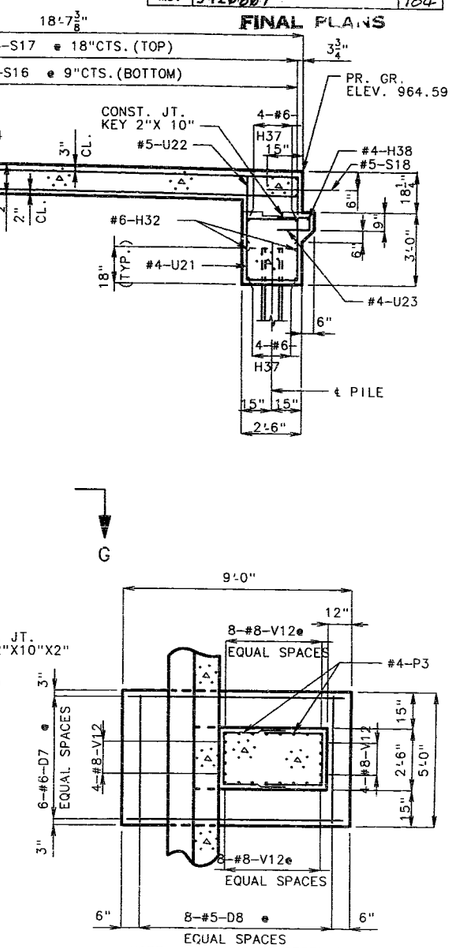

NOTE: REINFORCING STEEL IN APRON WALL NOT SHOWN FOR CLARITY.

SECTION G-G

SUBSTRUCTURE QUANTITY TABLE FOR BENT NO. 3

ITEM		QUANTITY
CLASS 1 EXCAVATION	CU. YD.	74
STRUCTURAL STEEL PILE(10")	LIN. FT.	69
PRE-BORE FOR PILING	LIN. FT.	46
CLASS B CONCRETE (SUBSTRUCTURE)	CU. YD.	98.7
REINFORCING STEEL (BRIDGES)	LBS.	13020
REINFORCING STEEL (EPOXY COATED)	LBS.	1100
FOUNDATION TEST HOLES	LIN. FT.	12

DETAILS OF ABUTMENT NO. 3

DETAILED MAY 1992
CHECKED JULY 1992

NOTE: THIS DRAWING IS NOT TO SCALE. FOLLOW DIMENSIONS.

JACKSON COUNTY

A-5249

11/68

STATE	PROJ NO	SHEET NO
MO	J4I0807	185

FINAL PLANS

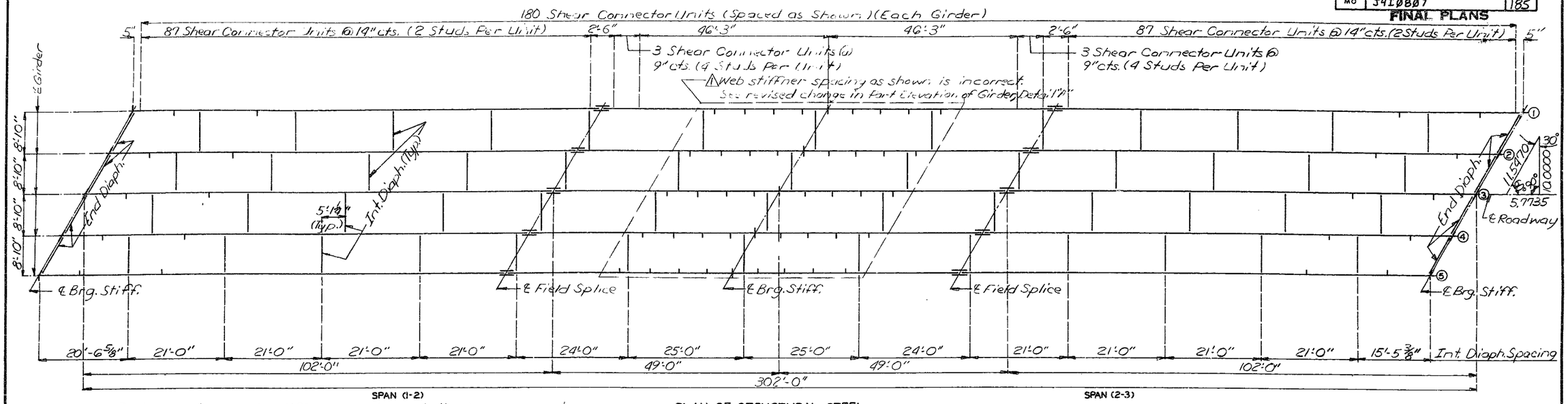

PLAN OF STRUCTURAL STEEL

Note: Intermediate web stiffener plate and diaphragm spacing may vary from plan dimensions by a maximum of 3" for diaphragm to connect to the intermediate web stiffener plate.
For details of shear connectors, see sheet No. 14.

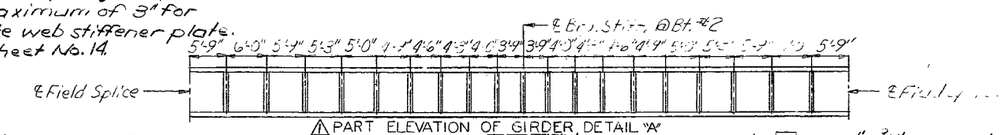

PART ELEVATION OF GIRDER, DETAIL "A"

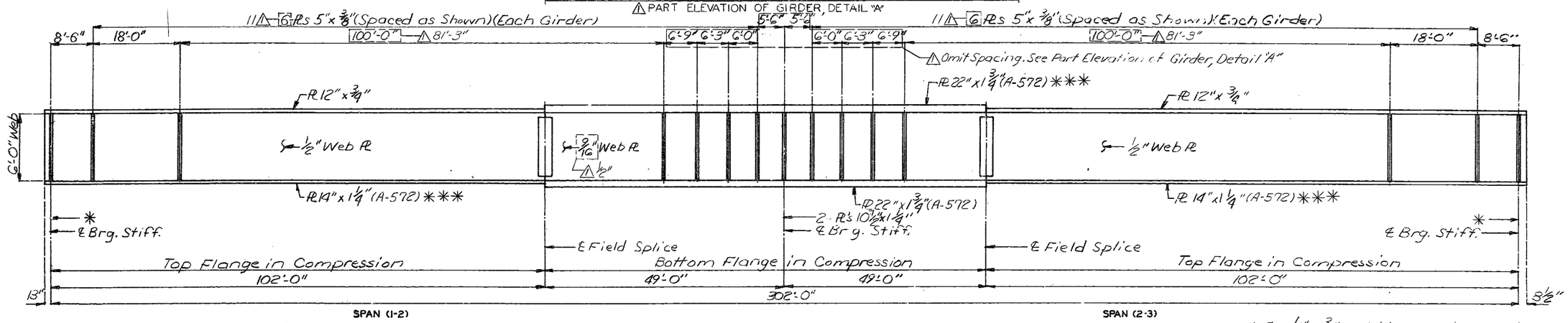

ELEVATION OF GIRDER

Note: Plate girder shall be fabricated to conform with camber diagram shown on sheet 20.
All web plates are subject to notch toughness requirements.
Fabricated Structural Steel shall be A-36 except as shown.
Longitudinal dimensions are horizontal from ℄ Brg. to ℄ Brg.. See Part-Longitudinal Sections on sheet No. 15.
Transverse web stiffeners shall be located as shown in Plan of Structural Steel.

* Pl 6 1/2" x 3/4" (Outside Exterior Gdrs.)
Pl 7 1/2" x 3/4" (Inside Exterior Gdrs. and Both Sides of Interior Gdrs.)

*** Indicates flange plates subject to notch toughness requirements.

DETAILED JUN. 1992
CHECKED July 1992

Note: This drawing is not to scale. Follow dimensions.

Revised 8/15/94

Sheet No. 13 of 33.

JACKSON COUNTY

A-5249

249-178

STATE	PROJ. NO.	SHEET NO.
MO.		

FINAL PLANS

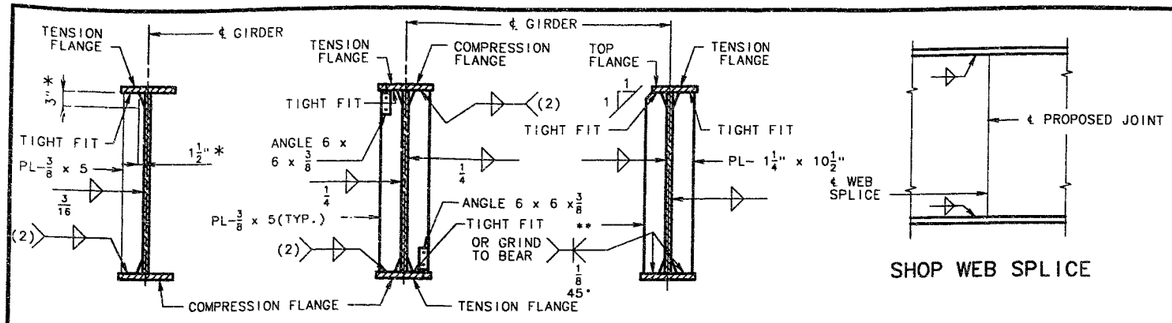

INT. WEB STIFF. (ONE SIDE ONLY) | INT. DIAPH. CONN. PLATE | END BRG. STIFF. | INT. BRG. STIFF.

SHOP WEB SPLICE

(2) WELD TO COMPRESSION FLANGE AS LOCATED ON ELEVATION OF GIRDER.

* TYPICAL FOR ALL INT. WEB STIFF., INT. DIAPH. CONN. PL. AND BRG. STIFF..

**PL 6 1/2"x3/4"(OUTSIDE EXTERIOR GIRDER)

PL 7 1/2x3/4"(INSIDE EXTERIOR GIRDERS AND BOTH SIDES OF INTERIOR GIRDERS)

WELDING DETAILS

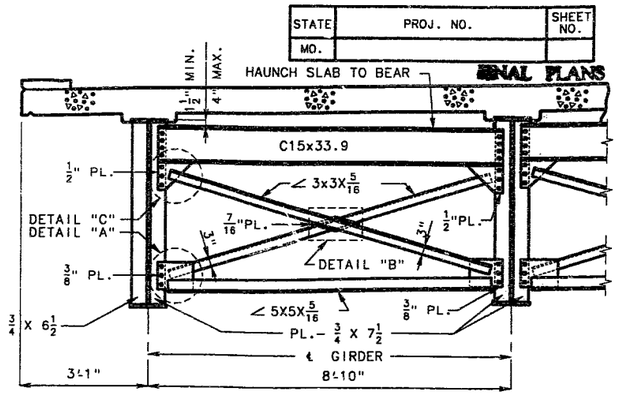

TYPICAL PART SECTION SHOWING END DIAPHRAGMS

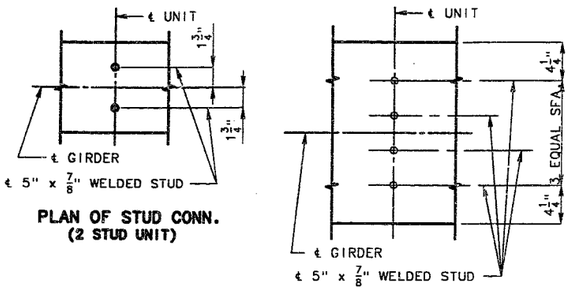

PLAN OF STUD CONN. (2 STUD UNIT)

PLAN OF STUD CONN. (4 STUD UNIT)

NOTE: WEIGHT OF 1823 LBS. OF SHEAR CONNECTORS IS INCLUDED IN WEIGHT OF FABRICATED STRUCTURAL CARBON STEEL.

DETAIL OF SHEAR CONNECTORS

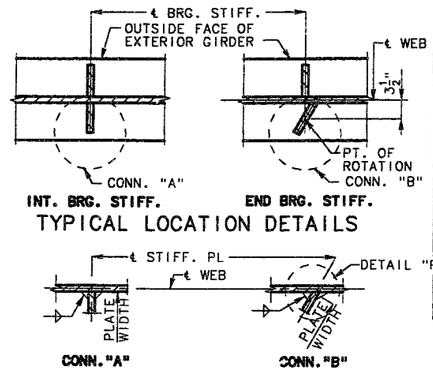

TYPICAL LOCATION DETAILS

WELDING DETAILS

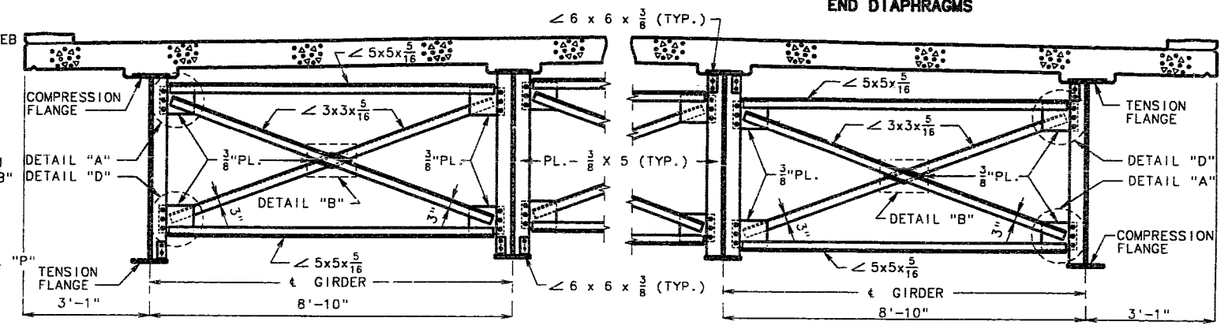

TYPICAL PART SECTION SHOWING INTERMEDIATE DIAPHRAGMS BOTTOM FLANGE IN TENSION

TYPICAL PART SECTION SHOWING INTERMEDIATE DIAPHRAGMS TOP FLANGE IN TENSION

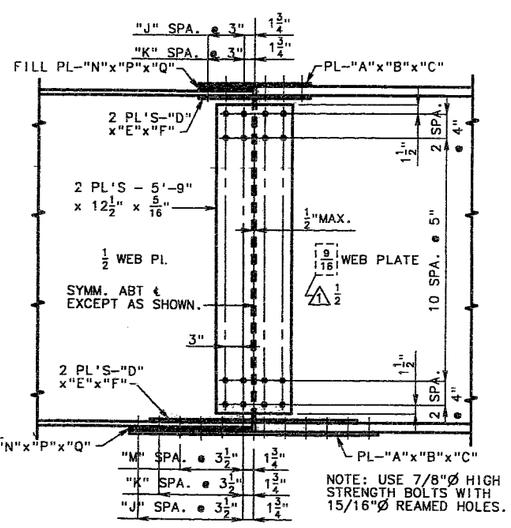

NOTE: USE 7/8"Ø HIGH STRENGTH BOLTS WITH 15/16"Ø REAMED HOLES.

DETAILS OF FIELD SPLICE

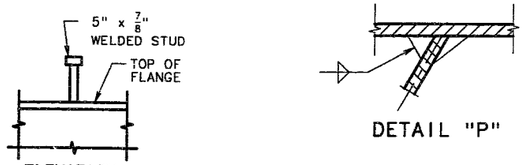

SPLICE LOCATION	TABLE OF DIMENSIONS – FIELD SPLICE											
	"A"	"B"	"C"	"D"	"E"	"F"	"J"	"K"	"M"	"N"	"P"	"Q"
TOP	12"	3/8"	2'-0 1/2"	5"	1/2"	2'-0 1/2"	3	3	–	12"	1"	12"
BOTT	14"	1 1/8"	3'-5 1/2"	6"	1 1/8"	2'-10 1/2"	5	4	2	14"	1/2"	20 1/2"

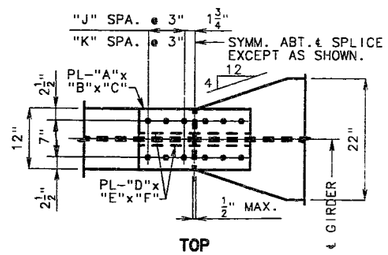

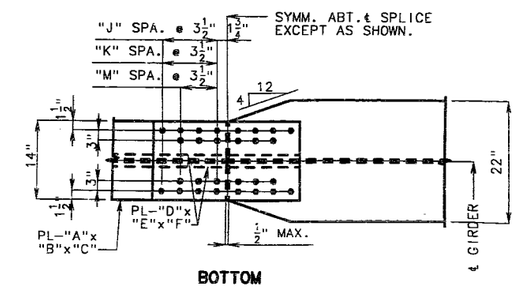

PLAN OF FLANGES

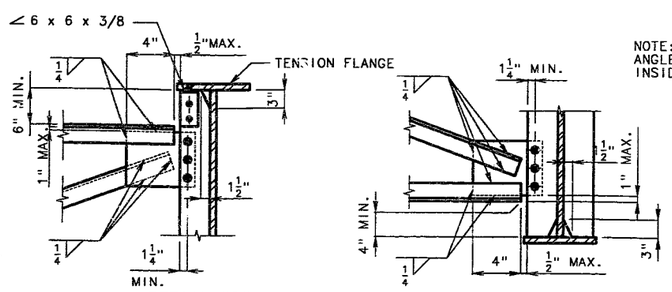

DETAIL "D"

DETAIL "A"

NOTE: THE TWO 3/4"Ø H.S. BOLTS THAT CONNECT THE 6 X 6 X 3/8 ANGLE TO THE TOP FLANGE SHALL BE PLACED SO THE NUT IS ON THE INSIDE OF FLANGE TOWARD THE WEB.

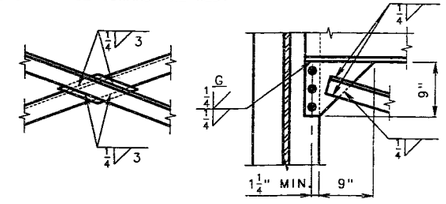

DETAIL "B"

DETAIL "C"

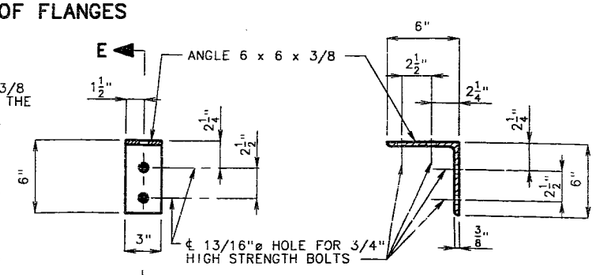

DETAIL OF FLANGE CONNECTION ANGLE

SECTION E-E

DETAILED MAY 1992
CHECKED JULY 1992

NOTE: THIS DRAWING IS NOT TO SCALE. FOLLOW DIMENSIONS.

1 REVISED 8/15/94

SHEET NO. 14 OF 33.

JACKSON COUNTY

A-5249

STATE	PROJ. NO.	SHEET NO.
MO.	J4I0807	187

FINAL PLANS

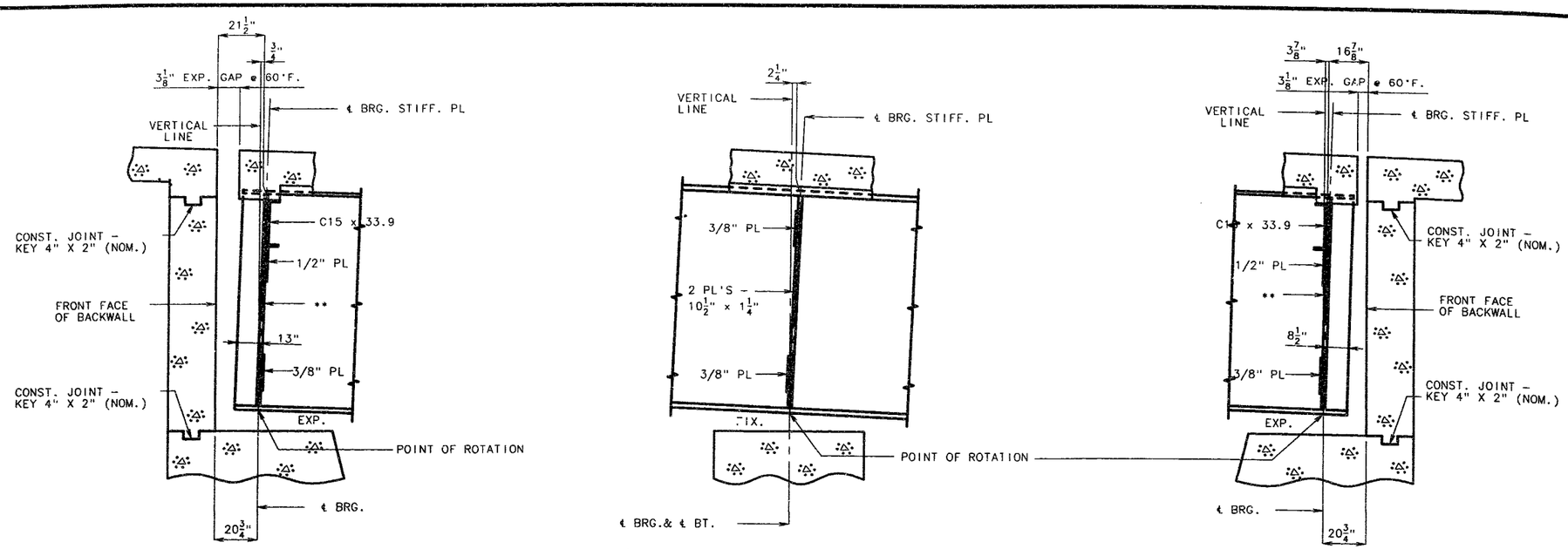

PART LONGITUDINAL SECTION

** PL $6\frac{1}{2} \times \frac{3}{4}$ (OUTSIDE EXTERIOR GDRS.)
PL $7\frac{1}{2} \times \frac{3}{4}$ (INSIDE EXTERIOR GDRS. AND BOTH SIDES OF INTERIOR GDRS.)

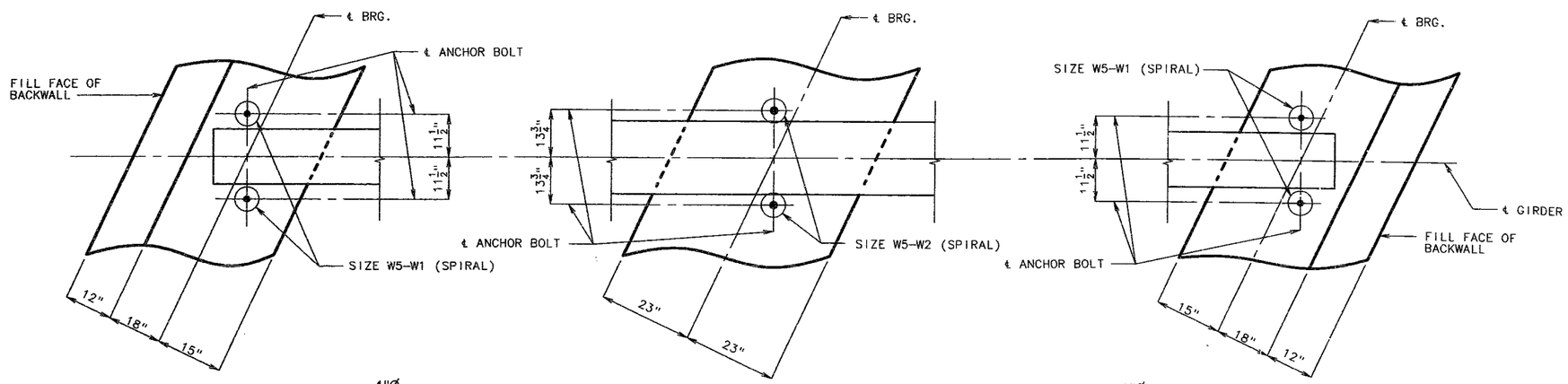

PART ANCHOR BOLT PLAN

* CLEAR TOP REINFORCEMENT (TIE TOP OF SPIRAL TO LONGITUDINAL REINFORCEMENT).

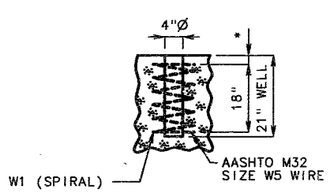

DETAIL OF ANCHOR BOLT WELL AT END ABUTMENTS

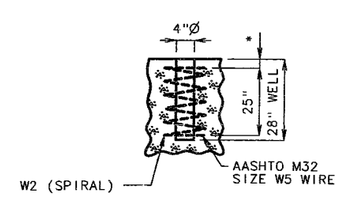

DETAIL OF ANCHOR BOLT WELL AT INT. BT. NO. 2

DETAILED MAY 1992
CHECKED JULY 1992

NOTE: THIS DRAWING IS NOT TO SCALE. FOLLOW DIMENSIONS.

JACKSON COUNTY

A-5249

742 190

STATE	PROJ. NO.	SHEET NO.
MO.	J4I0807	190

FINAL PLANS

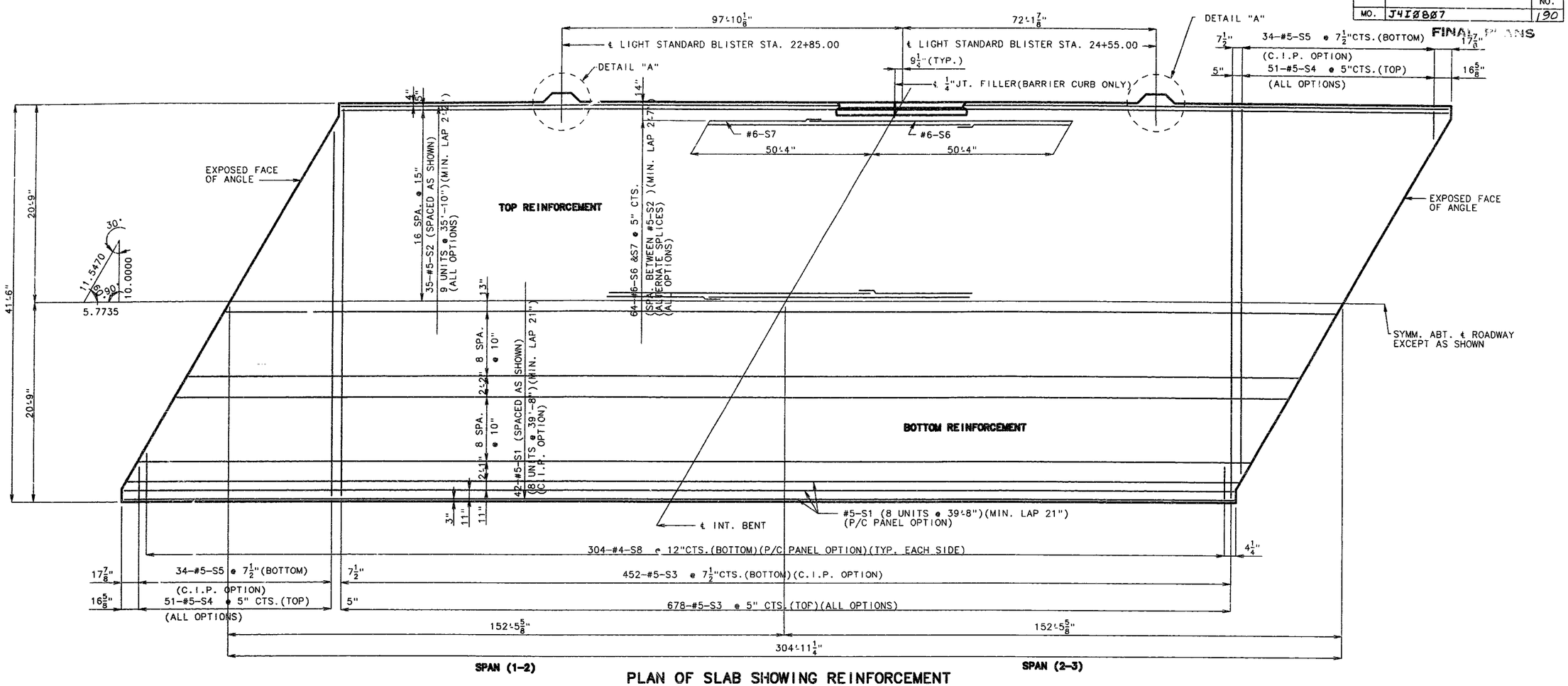

PLAN OF SLAB SHOWING REINFORCEMENT

NOTE: LONGITUDINAL DIMENSIONS SHOWN ARE HORIZONTAL.
FOR DETAILS OF SLAB DRAINS SEE SHEET NO. 21.
FOR DETAILS OF P/C PANEL OPTION SHOWN SEE SHEET NO. 19.
FOR SLAB POURING SEQUENCE SEE SHEET NO. 20.
FOR SLAB HAUNCHING DIAGRAM SEE SHEET NO. 20.
FOR DETAILS OF CONDUIT SYSEM SEE SHEET NO. 22.
LONGITUDINAL REINFORCING STEEL SHALL BE PLACED SO THAT ENDS SHALL NOT BE MORE THAN 1"+ FROM VERTICAL LEG OF ANGLE AT EXPANSION DEVICE.

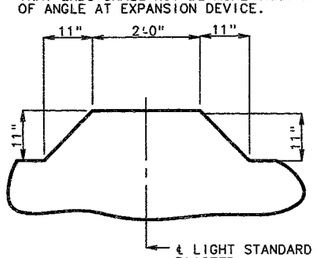

DETAIL "A"

NOTE: FOR REINFORCEMENT IN LIGHT STANDARD BLISTER SEE SHEET NO. 23.

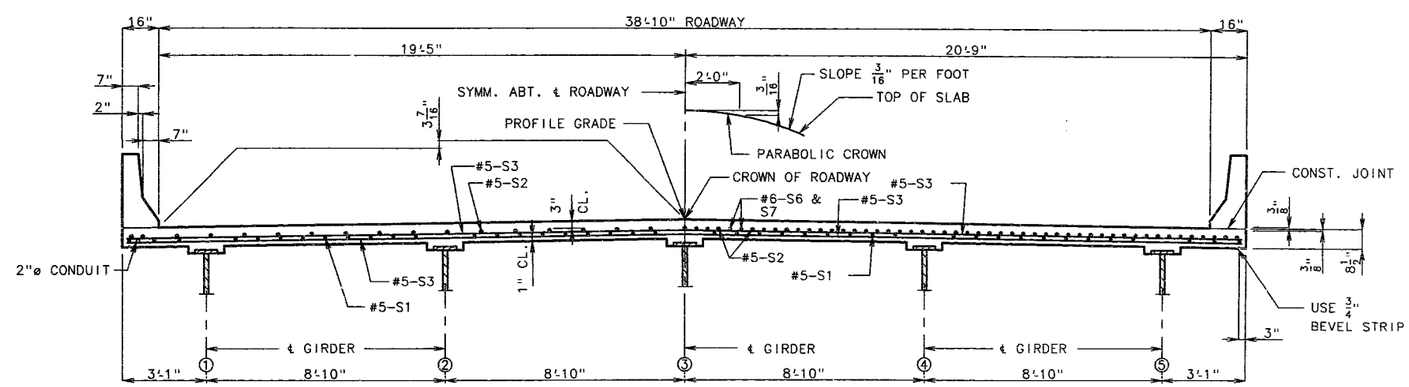

HALF SECTION NEAR ℄ SPAN

HALF SECTION NEAR INT. BENT

NOTE: FOR DETAILS AND REINFORCEMENT OF SAFETY BARRIER CURB NOT SHOWN SEE SHEET NO. 23. (C.I.P. OPTION SHOWN)

NOTE: THIS DRAWING IS NOT TO SCALE. FOLLOW DIMENSIONS.

JAN. 1981	REVISED JUNE 1991

SLB58-10.dgn/S3.30.SYM.5.A

DETAILED MAY 1992
CHECKED JULY 1992

SHEET NO. 18 OF 33.

JACKSON COUNTY

A-5249

STATE	PROJ. NO.	SHEET NO.
MO.	J4I0807	194

FINAL PLANS

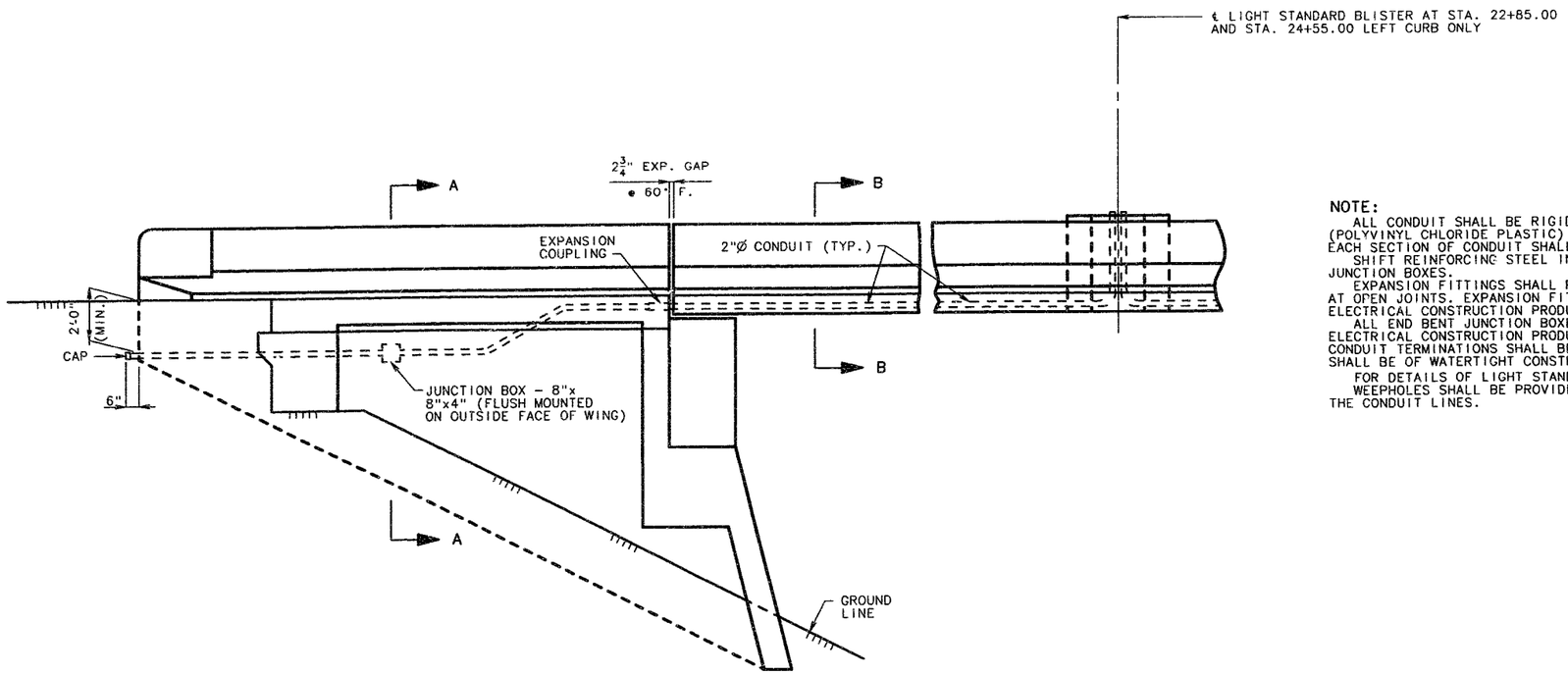

PART SECTION NEAR LEFT ABUTMENT WING SHOWING LOCATION OF 2"Ø CONDUIT
(ABUT. #1 SHOWN, ABUT. #3 OPPOSITE HAND.)

NOTE:
ALL CONDUIT SHALL BE RIGID NON-METALLIC SCHEDULE 40 HEAVY WALL PVC (POLYVINYL CHLORIDE PLASTIC) WITH 3" MINIMUM COVER IN CONCRETE WHERE POSSIBLE. EACH SECTION OF CONDUIT SHALL BEAR THE UNDERWRITERS' LABORATORIES, INC., (UL) LABEL.
SHIFT REINFORCING STEEL IN FIELD WHERE NECESSARY TO CLEAR CONDUIT AND JUNCTION BOXES.
EXPANSION FITTINGS SHALL PROVIDE A MINIMUM MOVEMENT IN EITHER DIRECTION OF 3" AT OPEN JOINTS. EXPANSION FITTINGS SHALL BE EQUAL TO CARLON ELECTRICAL CONSTRUCTION PRODUCTS OR TRIANGLE CONDUIT AND CABLE COMPANY, INC.
ALL END BENT JUNCTION BOXES SHALL BE PVC MOLDED FLUSH MOUNTED AND EQUAL TO CARLON ELECTRICAL CONSTRUCTION PRODUCTS OR TRIANGLE CONDUIT AND CABLE COMPANY, INC. THE CONDUIT TERMINATIONS SHALL BE PERMANENT OR SEPARABLE. THE TERMINATIONS AND COVERS SHALL BE OF WATERTIGHT CONSTRUCTION.
FOR DETAILS OF LIGHT STANDARDS AND WIRING, SEE ELECTRICAL PLANS.
WEEPHOLES SHALL BE PROVIDED AT APPROPRIATE LOCATIONS TO DRAIN ANY MOISTURE IN THE CONDUIT LINES.

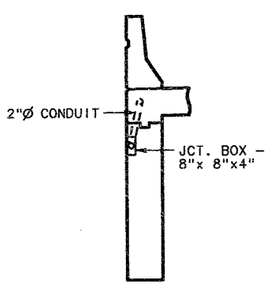

SECTION A-A

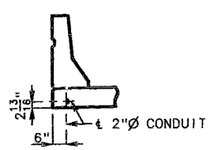

SECTION B-B

182 379

DETAILS OF CONDUIT SYSTEM ON STRUCTURE

STATE	PROJ. NO.	SHEET NO.
MO.	J4I0807	195

FINAL PLANS

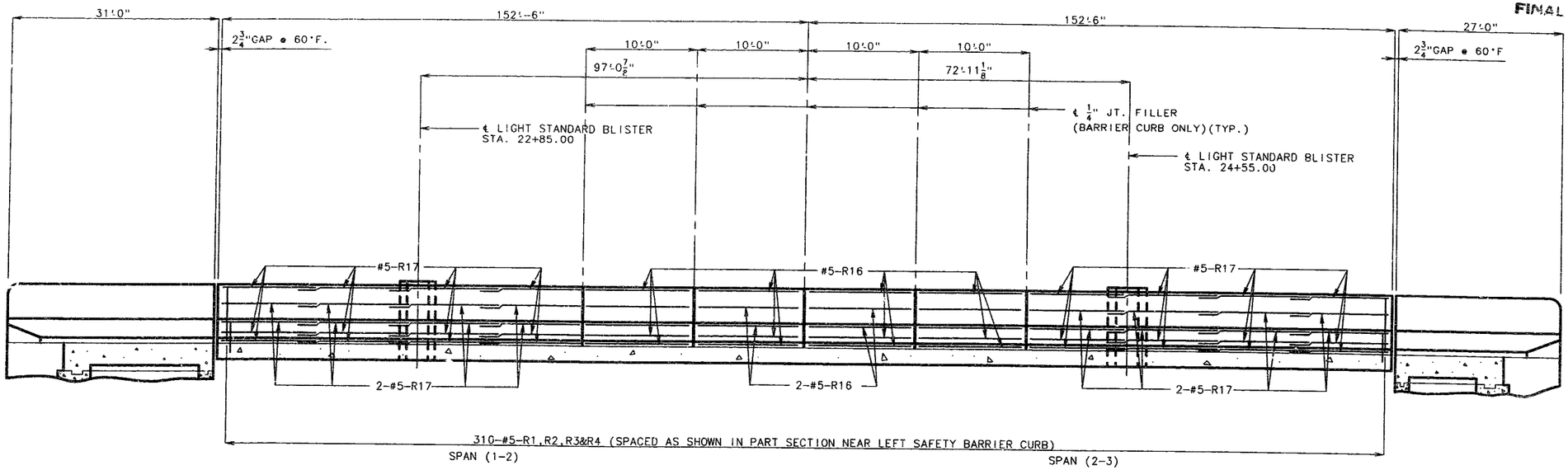

SECTION NEAR LEFT BARRIER CURB

NOTE: RIGHT CURB SIMILAR EXCEPT NO LIGHT BLISTERS ON RIGHT CURB.

NOTE: LONGITUDINAL DIMENSIONS ARE HORIZONTAL AND ALONG TOP OF OUTSIDE EDGE OF SLAB. RUSTIFICATION NOT SHOWN FOR CLARITY.

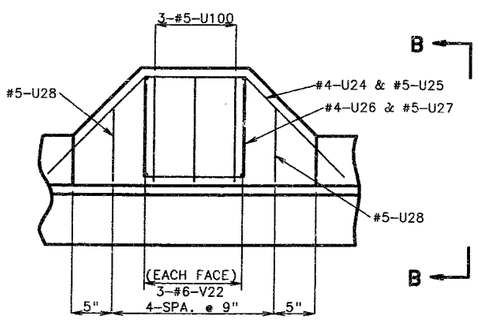

PLAN SHOWING REINFORCEMENT

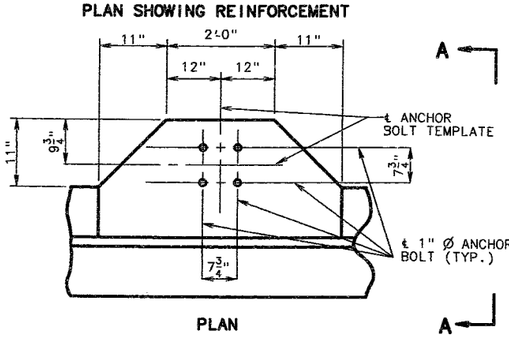

PLAN

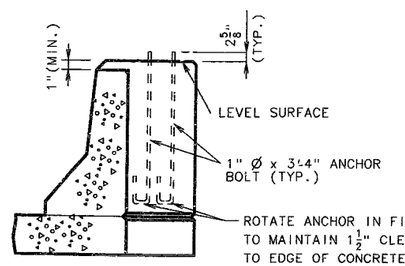

SECTION A-A

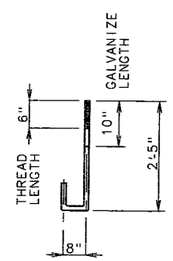

ANCHOR BOLT DETAIL

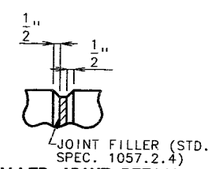

FILLED JOINT DETAIL

NOTE: COST OF FURNISHING AND PLACING ANCHOR BOLTS FOR LIGHT STANDARD SHALL BE INCLUDED IN THE CONTRACT UNIT PRICE FOR OTHER ITEMS.
TOP OF LIGHT STANDARD SUPPORTS SHALL BE MADE HORIZONTAL; ANCHOR BOLTS SHALL BE PLACED VERTICALLY.

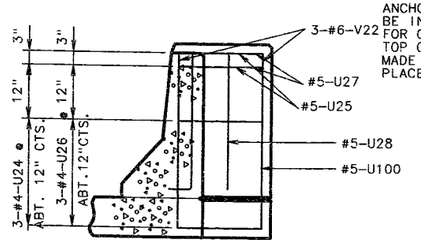

SECTION B-B

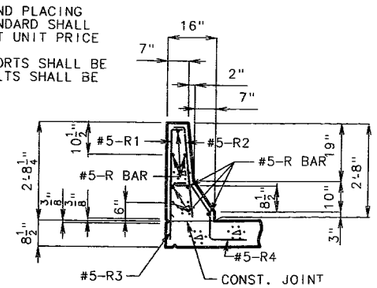

SECTION G-G

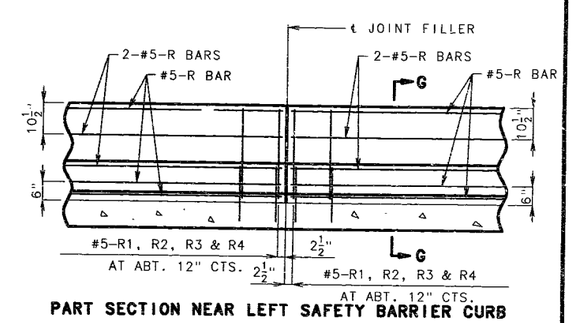

PART SECTION NEAR LEFT SAFETY BARRIER CURB

DETAILS OF LIGHT STANDARD

NOTE: ADDITIONAL CONCRETE AND REINFORCEMENT IN BARRIER CURB AT LIGHT STANDARD SUPPORTS AND LIGHT SIGN SUPPORT SHALL BE INCLUDED IN THE PRICE BID FOR SAFETY BARRIER CURB PER LINEAR FOOT.

NOTE: USE A MINIMUM LAP OF 17" FOR #5 HORIZONTAL SAFETY BARRIER CURB BARS. THE CROSS-SECTIONAL AREA ABOVE THE SLAB = 2.27 SQ. FT.

DETAILED JUN. 1992
CHECKED JULY 1992

NOTE: THIS DRAWING IS NOT TO SCALE. FOLLOW DIMENSIONS.

JACKSON COUNTY A-5249

183 R20

STATE	PROJ. NO.	SHEET NO.
MO.	J4I0807	196

FINAL PLANS

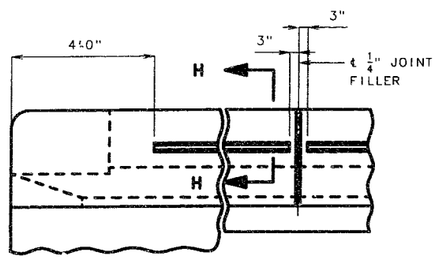

AT END OF WING AT JOINT FILLER

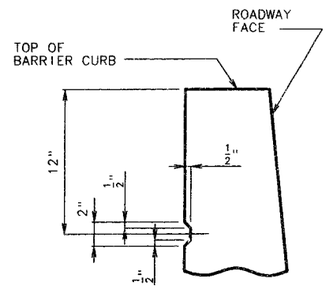

SECTION H-H

DETAILS OF RUSTICATION

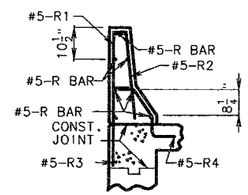

SECTION G-G

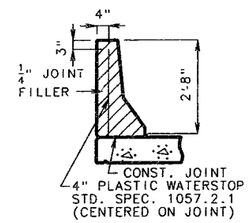

DETAIL OF PLASTIC WATERSTOP

NOTE: PLASTIC WATERSTOP SHALL BE PLACED IN ALL SAFETY BARRIER CURB FILLED JOINTS.

COST OF PLASTIC WATERSTOP COMPLETE-IN-PLACE SHALL BE INCLUDED IN CONTRACT UNIT PRICE FOR SAFETY BARRIER CURB.

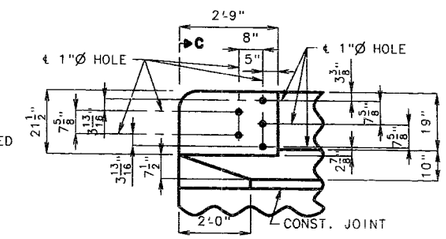

PART ELEVATION

NOTE:

TOP OF SAFETY BARRIER CURB SHALL BE BUILT PARALLEL TO GRADE WITH SAFETY BARRIER CURB JOINTS (EXCEPT AT END BENTS) NORMAL TO GRADE.

ALL EXPOSED EDGES OF SAFETY BARRIER CURB SHALL HAVE EITHER A 1/2" RADIUS OR A 3/8" BEVEL, UNLESS OTHERWISE NOTED.

CONCRETE IN THE SAFETY BARRIER CURB SHALL BE CLASS B1.

WHEN THE SAFETY BARRIER CURB IS BID BY LINEAR FEET, THE CONTRACT UNIT PRICE SHALL INCLUDE THE COST OF ALL CONCRETE AND REINFORCEMENT, COMPLETE-IN-PLACE.

MEASUREMENT OF THE SAFETY BARRIER CURB IS TO THE NEAREST LINEAR FOOT FOR EACH STRUCTURE, MEASURED ALONG THE OUTSIDE TOP OF SLAB FROM END OF WING TO END OF WING.

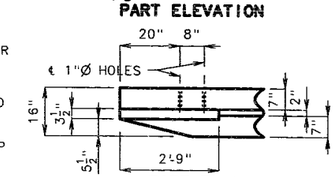

PART PLAN

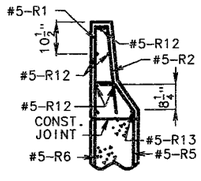

SECTION E-E

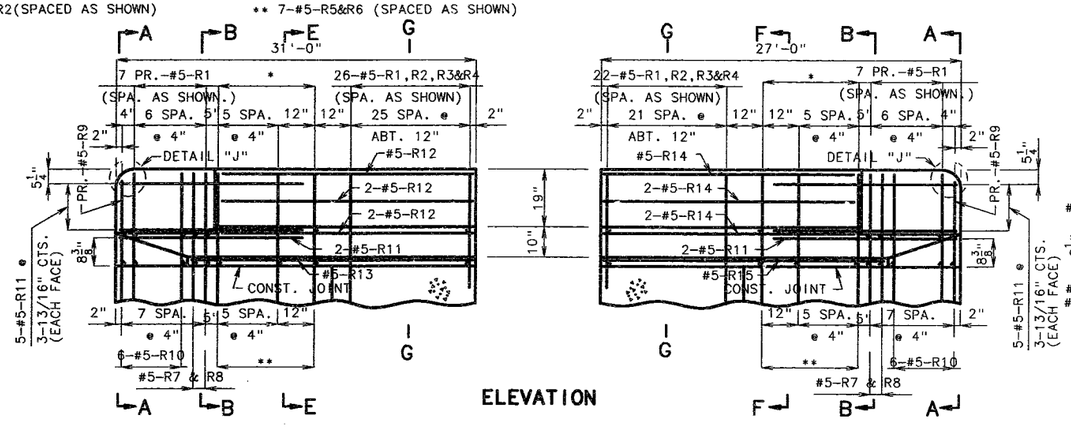

ELEVATION

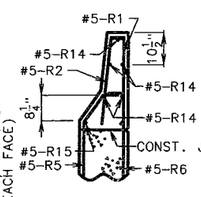

SECTION F-F

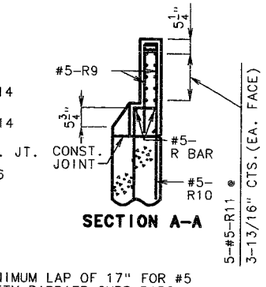

SECTION A-A

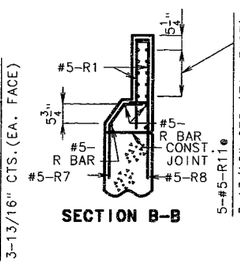

SECTION B-B

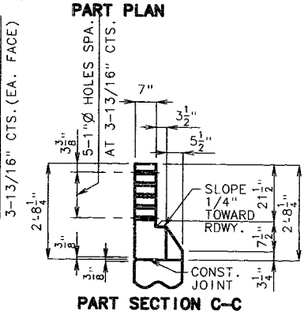

PART SECTION C-C

DETAILS OF GUARD RAIL ATTACHMENT

NOTE: USE A MINIMUM LAP OF 17" FOR #5 HORIZONTAL SAFETY BARRIER CURB BARS.

THE CROSS-SECTIONAL AREA ABOVE THE SLAB = 2.27 SQ. FT.

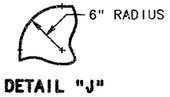

DETAIL "J"

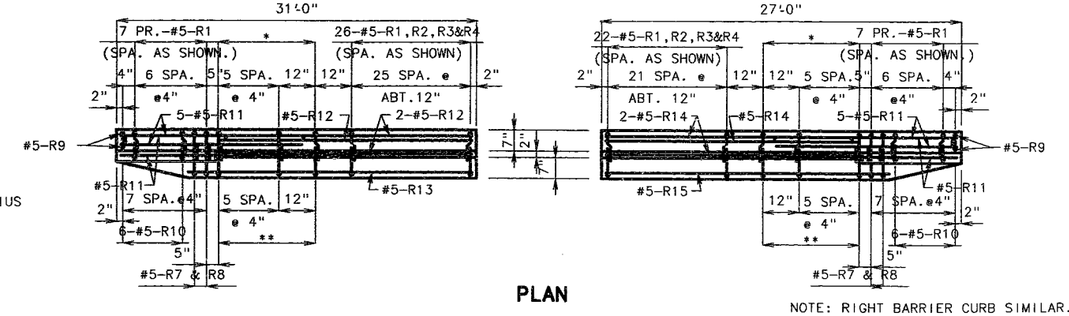

PLAN

NOTE: RIGHT BARRIER CURB SIMILAR.

DETAILS OF LEFT SAFETY BARRIER CURB AT END BENTS

DETAILED JUN. 1992
CHECKED JULY 1992

NOTE: THIS DRAWING IS NOT TO SCALE. FOLLOW DIMENSIONS.

SHEET NO. 24 OF 33.

JACKSON COUNTY

A-5249

184 224

STATE	PROJ. NO.	SHEET NO.
MO.	J4I0807	197

FINAL PLANS

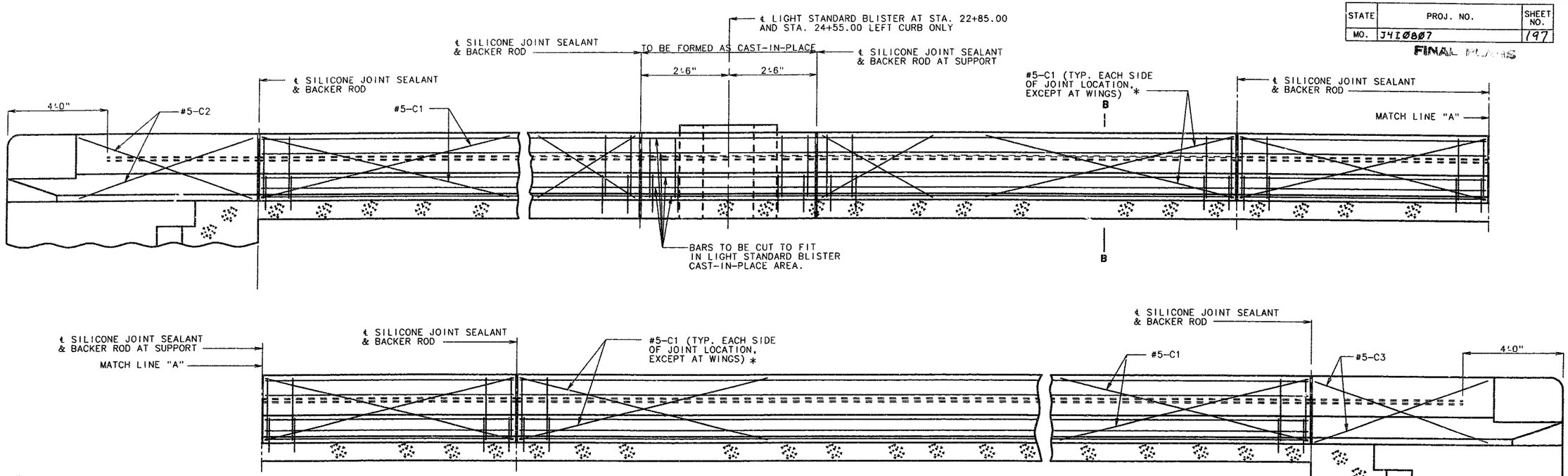

NOTE:

TOP OF SAFETY BARRIER CURB SHALL BE BUILT PARALLEL TO GRADE WITH SAFETY BARRIER CURB JOINTS (EXCEPT AT END BENTS) NORMAL TO GRADE.

WHEN THE SAFETY BARRIER CURB IS BID BY LINEAR FEET, THE CONTRACT UNIT PRICE SHALL INCLUDE THE COST OF ALL CONCRETE AND REINFORCEMENT, COMPLETE-IN-PLACE.

CONCRETE IN THE SAFETY BARRIER CURB SHALL BE CLASS B1.

MEASUREMENT OF SAFETY BARRIER CURB IS TO THE NEAREST LINEAR FOOT FOR EACH STRUCTURE, MEASURED ALONG THE OUTSIDE TOP OF SLAB FROM END OF WING TO END OF WING.

TYPICAL SECTION NEAR LEFT SAFETY BARRIER CURB AT SUPPORT LOCATIONS
(OPTIONAL SLIP-FORM BRIDGE SAFETY BARRIER CURB)
(RIGHT CURB SIMILAR EXCEPT NO LIGHT BLISTERS ON RIGHT CURB.)

NOTE:

JOINT SEALANT AND BACKER RODS SHALL BE USED ON ALL SLIP-FORM BRIDGE SAFETY BARRIER CURBS INSTEAD OF JOINT FILLER.

PLASTIC WATERSTOP SHALL NOT BE USED WITH SLIP-FORM OPTION.

C BARS (SLIP-FORM OPTION ONLY) SHALL BE USED IN ADDITION TO CAST-IN-PLACE CONVENTIONAL FORMING REINFORCEMENT FOR BRIDGE SAFETY BARRIER CURB.

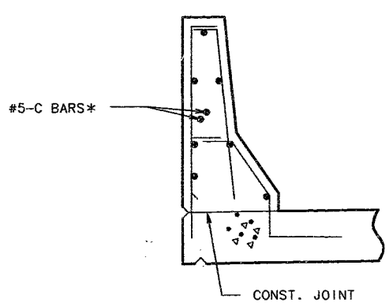

PART SECTION B-B

NOTE: * EACH SIDE OF JOINT LOCATION, EXCEPT SPAN SIDE AT END BENTS AND INSIDE AREA FOR LIGHT BLISTER.

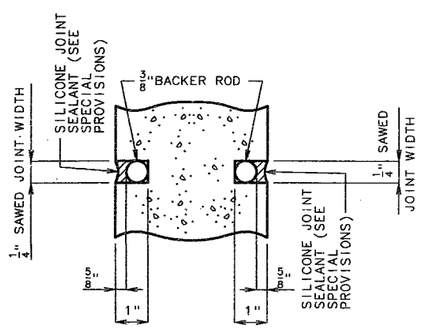

SECTION A-A

NOTE: COST OF SILICONE JOINT SEALANT AND BACKER ROD COMPLETE IN PLACE TO BE INCLUDED IN THE CONTRACT UNIT PRICE FOR SAFETY BARRIER CURB.

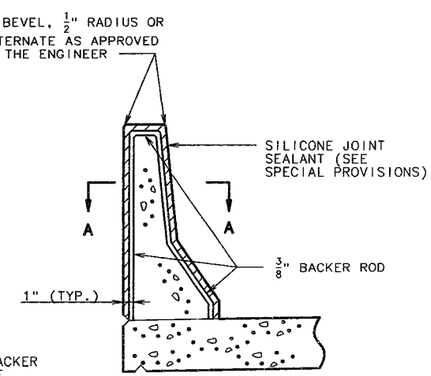

SECTION THRU JOINT

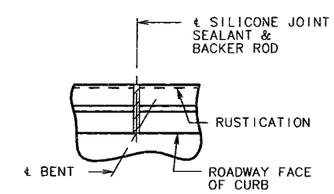

PART PLAN SHOWING SAFETY BARRIER CURB JOINT

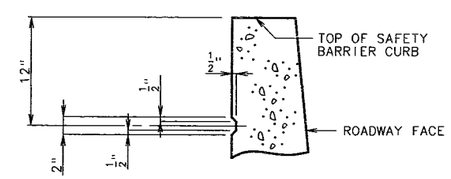

PART SECTION SHOWING RUSTICATION DETAILS

RUSTICATION DETAIL
(USE ON HIGHWAY GRADE SEPARATION ONLY)

OPTIONAL SLIP-FORM BRIDGE SAFETY BARRIER CURB

B/C SF16,GS 3.30 , A
BARRIER CURB REVISION REVISED
FEB. 1991

DETAILED MAY 1992
CHECKED JULY 1992

NOTE: THIS DRAWING IS NOT TO SCALE. FOLLOW DIMENSIONS.

JACKSON COUNTY A-5249

FINAL PLANS

STATE	PROJ. NO.	SHEET NO.
MO.	J4I0807	199

BILL OF REINFORCING STEEL

NO. REQ'D.	MARK NO. (SIZE MARK)	LOCATION	EPOXY (E)	SHAPE NO.	STIRRUP (S)	SUBSTR. (X)	VARIES (V)	NO. EACH	B FT. IN.	C FT. IN.	D FT. IN.	E FT. IN.	F FT. IN.	H FT. IN.	K FT. IN.	NOMINAL LENGTH FT. IN.	ACTUAL LENGTH FT. IN.	WEIGHT LBS.
		SUBSTRUCTURE																
		ABUT. NO. 1																
15	5D4	FOOTINGS		18		X			8 8.000							9 10	9 10	154
24	5D5	FOOTINGS		20		X			4 2.000							4 2	4 2	104
78	8D6	FOOTINGS		17		X			6 2.000							7 1	7 1	1475
8	9H8	BEAM		18		X			47 7.000							50 1	50 1	1362
20	6H9	BEAM		20		X			47 7.000							47 7	47 7	1429
8	9H10	BEAM		17		X			19 7.000							20 10	20 10	567
8	9H11	BEAM		17		X	V	1	37 0.000							38 3	38 3	
		INCREMENT = 3.375 INCH							35 0.000							36 3	36 3	1013
16	4H12	BACKWALL		20		X			24 9.000							24 9	24 9	265
8	5H13	BEAM		18		X			47 7.000							48 11	48 11	588
2	4H14	APPROACH H.		20		X			23 3.000							23 3	23 3	31
12	4H15	CURTAIN WALL		20		X			3 3.000							3 3	3 3	26
12	4H16	WING		20		X	V	2	17 0.000							17 0	17 0	
		INCREMENT = 30.250 INCH							4 5.000							4 5	4 5	86
2	4H17	WING		20		X			16 0.000							16 0	16 0	21
2	4H18	WING		20		X			19 6.000							19 6	19 6	26
6	5H19	WING		20		X	V	2	28 9.000							28 9	28 9	
		INCREMENT = 28.000 INCH							24 1.000							24 1	24 1	165
4	5H20	WING		20		X			30 8.000							30 8	30 8	128
4	5H21	WING		20		X			5 3.000							5 3	5 3	22
12	4H22	WING		20		X	V	2	17 0.000							17 0	17 0	
		INCREMENT = 30.250 INCH							4 5.000							4 5	4 5	86
2	4H23	WING		20		X			14 5.000							14 5	14 5	19
2	4H24	WING		20		X			18 0.000							18 0	18 0	24
8	5H25	WING		20		X	V	2	29 6.000							29 6	29 6	
		INCREMENT = 28.000 INCH							22 6.000							22 6	22 6	217
2	5H26	WING		20		X			30 8.000							30 8	30 8	64
4	5H27	WING	E	20		X			5 3.000							5 3	5 3	22
4	4H28	WING		20		X			4 11.000							4 11	4 11	13
4	4H29	WING		20		X			6 5.000							6 5	6 5	17
12	4H30	CURTAIN WALL		20		X			4 5.000							4 5	4 5	35
48	4P2	COLUMNS		10	S	X	V	6		3 0.500	2 3.000					8 4	8 2	
		INCREMENT = 3.625 INCH								2 0.200	2 3.000					6 3	6 1	228
2	7T1	WING		23		X			32 1.750	3 6.375				29 6.00	12 9.250	35 8	35 7	145
2	7T2	WING		23		X			6 8.000	2 1.750				2 7.75	6 1.375	8 10	8 10	36
7	6T3	WING		23	S	X			2 0.125	2 0.000				21.00	12.000	4 0	3 11	41
2	4T4	CURTAIN WALL		19	S	X			7 6.000	3 4.000						10 10	10 9	14
2	7T5	WING		23		X			32 1.750	2 9.000				29 6.00	12 9.375	34 11	34 10	142
2	7T6	WING		23		X			8 4.125	2 1.750				3 3.75	7 7.875	10 6	10 6	43
7	6T7	WING		21	S	X			2 0.125	2 0.000				21.00	12.000	4 0	3 7	38
2	4T8	CURTAIN WALL		19	S	X			7 6.000	4 5.000						11 11	11 10	16

BILL OF REINFORCING STEEL

NO. REQ'D.	MARK NO. (SIZE MARK)	LOCATION	EPOXY (E)	SHAPE NO.	STIRRUP (S)	SUBSTR. (X)	VARIES (V)	NO. EACH	B FT. IN.	C FT. IN.	D FT. IN.	E FT. IN.	F FT. IN.	H FT. IN.	K FT. IN.	NOMINAL LENGTH FT. IN.	ACTUAL LENGTH FT. IN.	WEIGHT LBS.
1	6U9	BEAM		13	S	X			2 6.375	2 9.250	3 3.375	2 8.000				12 7	12 1	18
21	6U10	BEAM		13	S	X			3 6.000	2 9.250	4 3.000	2 8.000				14 6	14 0	442
52	6U11	BEAM		13	S	X			3 6.000	2 11.500	4 3.000	2 10.375				14 11	14 5	1126
4	4U12	BEAM		10	S	X				6.000	3 6.000					4 6	4 4	12
44	4U13	APPROACH H.		10	S	X				17.500	6.000					3 5	3 3	96
46	5U14	BEAM		13	S	X			2 7.125	2 8.000	2 7.125	2 8.000				11 5	11 2	536
48	5U15	BEAM	E	10	S	X				2 7.500	2 7.125					7 10	7 8	384
45	5V2	BACKWALL	E	20		X			8 7.000							8 7	8 7	403
45	6V3	BACKWALL	E	20		X			8 10.000							8 10	8 10	597
78	8V4	COLUMNS		17		X			9 5.000							10 4	10 4	2152
4	4V5	CURTAIN WALL		20		X			7 6.000							7 6	7 6	20
10	5V6	WING		20		X	V	2	5 7.000							5 7	5 7	
		INCREMENT = 4.750 INCH							4 0.000							4 0	4 0	50
32	4V7	WING		20		X	V	2	15 8.000							15 8	15 8	
		INCREMENT = 7.750 INCH							6 0.000							6 0	6 0	232
6	4V8	WING		20		X	V	2	10 1.000							10 1	10 1	
		INCREMENT = 8.000 INCH							8 9.000							8 9	8 9	38
62	5V9	CURTAIN WALL		20		X			9 2.000							9 2	9 2	593
10	5V25	WING		20		X	V	2	4 10.000							4 10	4 10	
		INCREMENT = 5.250 INCH							3 1.000							3 1	3 1	41
32	4V26	WING		20		X	V	2	14 10.000							14 10	14 10	
		INCREMENT = 7.625 INCH							5 3.000							5 3	5 3	215
8	4V27	WING		20		X	V	2	9 11.000							9 11	9 11	
		INCREMENT = 7.625 INCH							8 0.000							8 0	8 0	48
10	W5W1	A.B.WELLS		22		X			18.000	9.125						26 1	26 1	44
		INT. BT.NO.2																
60	8D1	FOOTINGS		20		X			8 8.000							8 8	8 8	1388
6	6D2	FOOTINGS		10	S	X				5 4.000	8 0.000					18 8	18 4	165
45	9D3	FOOTINGS		20		X			7 11.000							7 11	7 11	1211
8	7H1	BEAM		7		X			4 4.000	3 7.500						10 7	10 7	173
9	10H2	BEAM		20		X			42 0.000							42 0	42 0	1627
4	6H3	BEAM		20		X			42 0.000							42 0	42 0	252
9	10H4	BEAM		17		X			21 5.000							22 10	22 10	884
9	10H5	BEAM		20		X			21 4.000							21 4	21 4	826
2	10H6	BEAM		17		X			23 1.000							24 6	24 6	211
7	10H7	BEAM		17		X			24 3.000							25 8	25 8	773
57	4P1	COLUMNS		16		X			2 9.000							9 6	9 6	362
1	6U1	BEAM		13	S	X			3 9.000	3 3.000	3 9.000	3 3.000				15 4	14 10	22

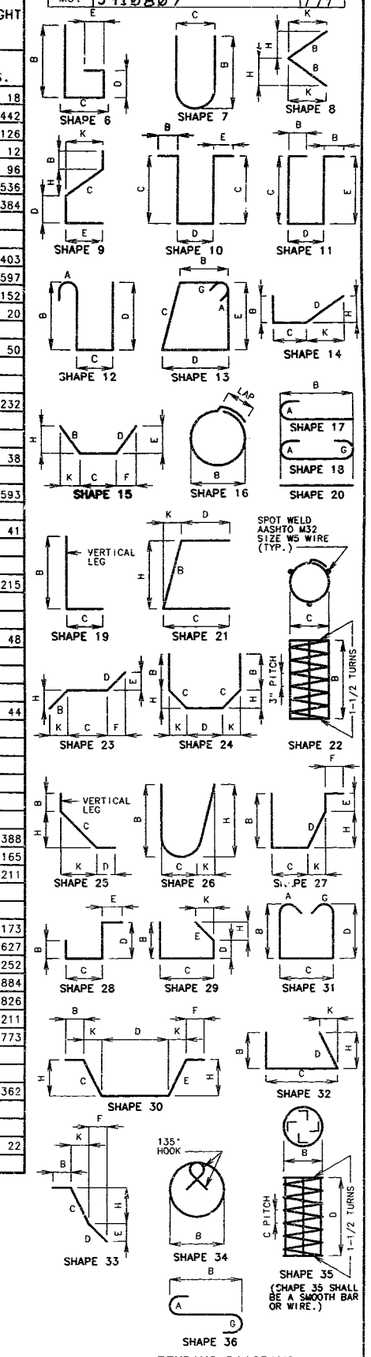

BENDING DIAGRAMS

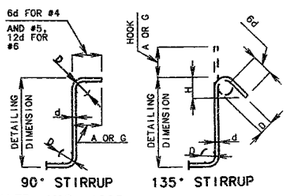

STIRRUP HOOK DIMENSIONS				
GRADES 40 - 50 - 60 KSI				
BAR SIZE	D (IN.)	90° HOOK	135° HOOK	
		HOOK A OR G	HOOK A OR G	APPROX. H
#4	2"	4-1/2"	4-1/2"	3"
#5	2-1/2"	6"	5-1/2"	3-3/4"
#6	4-1/2"	12"	8"	4-1/2"

NOTE: UNLESS OTHERWISE NOTED DIAMETER "D" IS THE SAME FOR ALL BENDS AND HOOKS ON A BAR.

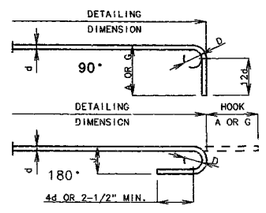

NOTE: THIS DRAWING IS NOT TO SCALE. FOLLOW DIMENSIONS.

TWO ADDITIONAL END HOOK DIMENSIONS ARE INCLUDED IN THE BAR BILL FOR TESTING.

END HOOK DIMENSIONS				
BAR SIZE	D (IN.)	ALL GRADES		
		180° HOOKS		90° HOOKS
		A OR G	J	A OR G
#3	2-1/4"	5"	3"	6"
#4	3"	6"	4"	8"
#5	3-3/4"	7"	5"	10"
#6	4-1/2"	8"	6"	12"
#7	5-1/4"	10"	7"	14"
#8	6"	11"	8"	16"
#9	9-1/2"	15"	11-3/4"	19"
#10	10-3/4"	17"	13-1/4"	22"
#11	12"	19"	14-3/4"	2'-0"
#14	18-1/4"	2'-3"	21-3/4"	2'-7"

NOTE:
ALL STANDARD HOOKS AND BENDS OTHER THAN 180 DEG. TO BE BENT WITH THE SAME PROCEDURE AS FOR 90 DEG. STD. HOOKS.
HOOKS AND BENDS SHALL BE IN ACCORDANCE WITH THE PROCEDURES AS SHOWN ON THIS SHEET.
E = EPOXY COATED REINFORCEMENT.
S = STIRRUP.
X = BAR IS INCLUDED IN SUBSTRUCTURE QUANTITIES.
V = BAR DIMENSIONS VARY IN EQUAL INCREMENTS BETWEEN DIMENSIONS SHOWN ON THIS LINE AND THE FOLLOWING LINE.
NO. EA. = NUMBER OF BARS OF EACH LENGTH.
NOMINAL LENGTHS ARE BASED ON OUT TO OUT DIMENSIONS SHOWN IN BENDING DIAGRAMS AND ARE LISTED FOR FABRICATORS USE. (NEAREST INCH)
ACTUAL LENGTHS ARE MEASURED ALONG CENTERLINE BAR TO THE NEAREST INCH.
PAYWEIGHTS ARE BASED ON ACTUAL LENGTHS.
FOUR ANGLE OR CHANNEL SPACERS ARE REQUIRED FOR EACH COLUMN SPIRAL. SPACERS ARE TO BE PLACED ON INSIDE OF SPIRALS. LENGTH AND WEIGHT OF COLUMN SPIRALS DO NOT INCLUDE SPLICES OR SPACERS.
REINFORCING STEEL (GRADE 60) = FY 60,000 PSI.

STD 90.8	REVISED
MAY 1974	OCT. 1991

DETAILED MAR. 1993
CHECKED MAR. 1993

SHEET NO. 27 OF 33.

JACKSON COUNTY

A-5249

186 326

FINAL PLANS

BILL OF REINFORCING STEEL

NO. REQ'D.	MARK NO. (SIZE MARK)	LOCATION	EPOXY (E)	SHAPE NO.	STIRRUP (S)	SUBSTR. (X)	VARIES (V)	NO. EACH	B FT. IN.	C FT. IN.	D FT. IN.	E FT. IN.	F FT. IN.	H FT. IN.	K FT. IN.	NOMINAL LENGTH FT. IN.	ACTUAL LENGTH FT. IN.	WEIGHT LBS.
32	6U2	BEAM		13	S	X			2 9.750	3 3.000	2 9.750	3 3.000				13 6	13 0	625
1	6U3	BEAM		13	S	X			2 11.250	3 3.000	2 11.250	3 3.000				13 9	13 3	20
16	6U4	BEAM		13	S	X			2 9.750	3 6.625	2 9.750	3 6.625				14 1	13 7	326
6	6U5	BEAM		13	S	X			3 9.000	3 6.625	3 9.000	3 6.625				15 11	15 6	140
12	6U6	BEAM		13	S	X			3 9.000	3 10.000	3 9.000	3 10.000				16 6	16 0	288
48	6U7	BEAM		13	S	X			2 9.750	3 10.000	2 9.750	3 10.000				14 8	14 2	1021
1	6U8	BEAM		13	S	X			2 11.250	3 10.000	2 11.250	3 10.000				14 11	14 5	22
4	4U50	BEAM		10	S	X				6.000	3 9.000					4 9	4 7	12
45	9V1	COLUMNS		20		X			21 0.000							21 0	21 0	3213
10	W5W2	A.B.WELLS		22		X			2 1.000	9.125						33 2	33 2	55
		ABUT. NO. 3																
18	6D7	FOOTINGS		18		X			8 8.000							10 0	10 0	270
24	5D8	FOOTINGS		20		X			4 8.000							4 8	4 8	117
72	8D9	FOOTINGS		17		X			6 2.000							7 1	7 1	1362
8	9H31	BEAM		18		X			47 7.000							50 1	50 1	1362
14	6H32	BEAM		20		X			47 7.000							47 7	47 7	1001
8	9H33	BEAM		17		X			20 4.000							21 7	21 7	587
8	9H34	BEAM		20		X			18 11.000							18 11	18 11	515
8	9H35	BEAM		17		X	V	1	26 0.000							27 3	27 3	
		INCREMENT = 3.250 INCH							24 1.000							25 4	25 4	715
16	4H36	BACKWALL		20		X			24 9.000							24 9	24 9	265
8	6H37	BEAM		18		X			47 7.000							48 11	48 11	588
2	4H38	APPROACH H.		20		X			23 3.000							23 3	23 3	31
12	4H39	CURTAIN WALL		20		X			3 3.000							3 3	3 3	26
12	4H40	CURTAIN WALL		20		X			4 5.000							4 5	4 5	35
8	4H41	WING		20		X	V	2	13 7.000							13 7	13 7	
		INCREMENT = 30.375 INCH							6 0.000							6 0	6 0	52
2	4H42	WING		20		X			12 7.000							12 7	12 7	17
2	4H43	WING		20		X			16 1.000							16 1	16 1	21
6	5H44	WING		20		X	V	2	25 3.000							25 3	25 3	
		INCREMENT = 27.500 INCH							20 8.000							20 8	20 8	144
2	5H45	WING		20		X			26 8.000							26 8	26 8	56
4	5H46	WING		20		X			5 3.000							5 3	5 3	22
4	5H47	WING	E	20		X			5 3.000							5 3	5 3	22
4	4H48	WING		20		X			5 1.000							5 1	5 1	14
10	4H49	WING		20		X	V	2	2 9.000							12 9	12 9	
		INCREMENT = 30.250 INCH							2 8.000							2 8	2 8	51
2	4H50	WING		20		X			10 4.000							10 4	10 4	14
2	4H51	WING		20		X			13 9.000							13 9	13 9	18
8	5H52	WING		20		X	V	2	25 4.000							25 4	25 4	
		INCREMENT = 27.625 INCH							18 5.000							18 5	18 5	183
2	5H53	WING		20		X			26 8.000							26 8	26 8	56
4	5H54	WING		20		X			6 6.000							6 6	6 6	17

BILL OF REINFORCING STEEL

NO. RFQ'D.	MARK NO. (SIZE MARK)	LOCATION	EPOXY (E)	SHAPE NO.	STIRRUP (S)	SUBSTR. (X)	VARIES (V)	NO. EACH	B FT. IN.	C FT. IN.	D FT. IN.	E FT. IN.	F FT. IN.	H FT. IN.	K FT. IN.	NOMINAL LENGTH FT. IN.	ACTUAL LENGTH FT. IN.	WEIGHT LBS.
36	4P3	COLUMNS		10	S	X	V	6		2 10.000	2 3.000					7 11	7 9	
		INCREMENT = 3.250 INCH								2 2.000	2 3.000					6 7	6 5	170
2	7T9	WING		23		X			27 9.625	21.875				25 6.125	11 0.625	29 8	29 6	121
2	7T10	WING		23		X			4 4.750	3 6.500				21.000	4 0.375	7 11	7 11	32
2	4T11	CURTAIN WALL		19	S	X			7 5.000	3 3.000						10 8	10 7	14
5	6T13	WING		23	S	X			2 0.125	2 0.000				21.000	12.000	4 0	3 11	29
2	7T14	WING		23		X			27 9.625	21.250				25 6.125	11 0.625	29 7	29 6	121
2	7T15	WING		23		X			7 8.500	2 0.500				3 0.750	7 0.875	9 9	9 9	40
2	4T16	CURTAIN WALL		19	S	X			7 6.000	4 5.000						11 11	11 10	16
5	6T17	WING		21	S	X			2 0.125	2 0.000				21.000	12.000	4 0	3 7	27
1	6U16	BEAM		13	S	X			2 6.375	3 6.750	3 3.375	3 5.750				14 2	13 8	21
23	6U17	BEAM		13	S	X			3 6.000	2 9.250	4 3.000	2 8.000				14 6	14 0	484
13	6U18	BEAM		13	S	X			3 6.000	3 2.125	4 3.000	3 1.000				15 4	14 10	290
37	6U19	BEAM		13	S	X			3 6.000	3 6.750	4 3.000	3 5.750				16 2	15 8	871
4	4U20	BEAM		10	S	X				6.000	3 6.000					4 6	4 4	12
46	4U21	BEAM		13	S	X			2 7.125	2 8.000	2 7.125	2 8.000				11 3	11 0	338
48	5U22	BEAM		10	S	X				2 3.250	2 7.125					7 2	6 11	346
44	4U23	APPROACH H.		10	S	X				17.500	6.000					3 5	3 3	96
45	5V10	BACKWALL	E	20		X			9 0.000							9 0	9 0	422
47	6V11	BACKWALL	E	20		X			9 3.000							9 3	9 3	653
72	8V12	COLUMNS		17		X			6 11.000							7 10	7 10	1506
62	5V13	CURTAIN WALL		20		X			6 7.000							6 7	6 7	426
2	4V14	CURTAIN WALL		20		X			7 5.000							7 5	7 5	10
10	5V15	WING		20		X	V	2	4 2.000							4 2	4 2	
		INCREMENT = 6.000 INCH							2 2.000							2 2	2 2	33
28	4V16	WING		20		X	V	2	14 1.000							14 1	14 1	
		INCREMENT = 8.750 INCH							4 7.000							4 7	4 7	175
2	4V17	WING		20		X			7 6.000							7 6	7 6	10
2	4V18	CURTAIN WALL		20		X			7 7.000							7 7	7 7	10
10	5V19	WING		20		X	V	2	4 1.000							4 1	4 1	
		INCREMENT = 5.750 INCH							2 2.000							2 2	2 2	33
28	4V20	WING		20		X	V	2	14 0.000							14 0	14 0	
		INCREMENT = 8.750 INCH							4 6.000							4 6	4 6	173
6	4V21	WING		20		X	V	2	8 7.000							8 7	8 7	
		INCREMENT = 8.000 INCH							7 3.000							7 3	7 3	32
10	W5W1	A.B.WELLS		22		X			18.000	9.125						26 1	26 1	44
		SUPERSTR.																
		SLAB ON SEMI-DEEP																

STATE	PROJ. NO.	SHEET NO.
MO.	J4I0887	200

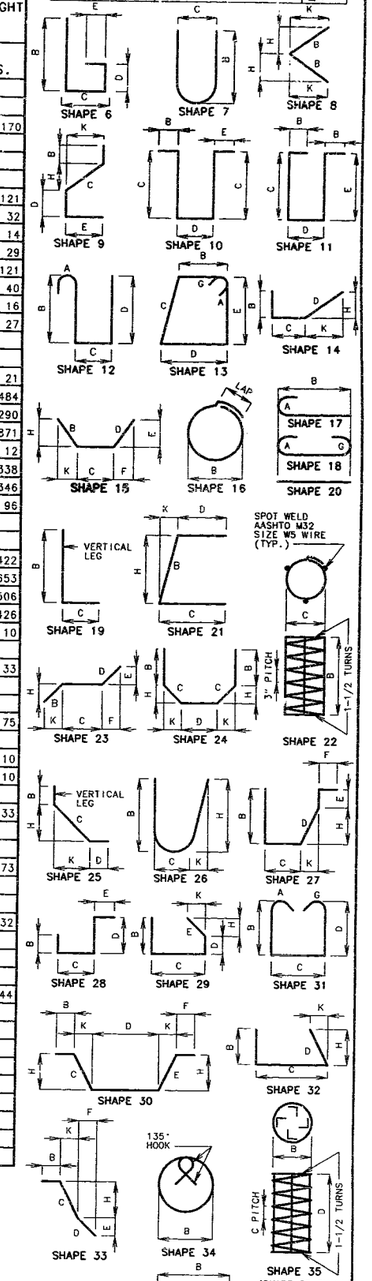

BENDING DIAGRAMS

STD 90.0 REVISED MAY 1974 OCT. 1991

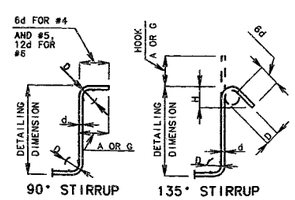

DETAILED MAR. 1993
CHECKED MAR. 1993

STIRRUP HOOK DIMENSIONS				
GRADES 40 - 50 - 60 KSI				
BAR SIZE	D (IN.)	90° HOOK	135° HOOK	
		HOOK A OR G	HOOK A OR G	APPROX. H
#4	2"	4-1/2"	4-1/2"	3"
#5	2-1/2"	6"	5-1/2"	3-3/4"
#6	4-1/2"	12"	8"	4-1/2"

NOTE: UNLESS OTHERWISE NOTED DIAMETER "D" IS THE SAME FOR ALL BENDS AND HOOKS ON A BAR.

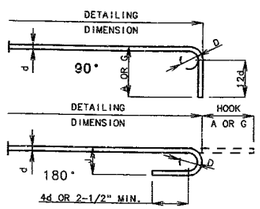

NOTE: THIS DRAWING IS NOT TO SCALE. FOLLOW DIMENSIONS.

TWO ADDITIONAL #6-V11 ARE INCLUDED IN THE BAR BILL FOR TESTING.

END HOOK DIMENSIONS				
BAR SIZE	D (IN.)	ALL GRADES		
		180° HOOKS		90° HOOKS
		A OR G	J	A OR G
#3	2-1/4"	5"	3"	6"
#4	3"	6"	4"	8"
#5	3-3/4"	7"	5"	10"
#6	4-1/2"	8"	6"	12"
#7	5-1/4"	10"	7"	14"
#8	6"	11"	8"	16"
#9	9-1/2"	15"	11-3/4"	19"
#10	10-3/4"	17"	13-1/4"	22"
#11	12"	19"	14-3/4"	2'-0"
#14	15-1/4"	2'-3"	21-3/4"	2'-7"

NOTE:
ALL STANDARD HOOKS AND BENDS OTHER THAN 180 DEG. TO BE BENT WITH THE SAME PROCEDURE AS FOR 90 DEG. STD. HOOKS.
HOOKS AND BENDS SHALL BE IN ACCORDANCE WITH THE PROCEDURES AS SHOWN ON THIS SHEET.
E = EPOXY COATED REINFORCEMENT.
S = STIRRUP.
X = BAR IS INCLUDED IN SUBSTRUCTURE QUANTITIES.
V = BAR DIMENSIONS VARY IN EQUAL INCREMENTS BETWEEN DIMENSIONS SHOWN ON THIS LINE AND THE FOLLOWING LINE.
NO. EA. = NUMBER OF BARS OF EACH LENGTH.
NOMINAL LENGTHS ARE BASED ON OUT TO OUT DIMENSIONS SHOWN IN BENDING DIAGRAMS AND ARE LISTED FOR FABRICATORS USE. (NEAREST INCH)
ACTUAL LENGTHS ARE MEASURED ALONG CENTERLINE BAR TO THE NEAREST INCH.
PAYWEIGHTS ARE BASED ON ACTUAL LENGTHS.
FOUR ANGLE OR CHANNEL SPACERS ARE REQUIRED FOR EACH COLUMN SPIRAL. SPACERS ARE TO BE PLACED ON INSIDE OF SPIRALS. LENGTH AND WEIGHT OF COLUMN SPIRALS DO NOT INCLUDE SPLICES OR SPACERS.
REINFORCING STEEL (GRADE 50) = FY 60,000 PSI.

SHEET NO. 28 OF 33.

JACKSON COUNTY A-5249

FINAL PLANS

STATE	PROJ. NO.	SHEET NO.
MO.	J4I0807	201

BILL OF REINFORCING STEEL

NO. REQ'D.	MARK NO. (SIZE MARK)	LOCATION	EPOXY (E)	SHAPE NO.	STIRRUP (S)	SUBSTR. (X)	VARIES (V)	NO. EACH	B FT. IN.	C FT. IN.	D FT. IN.	E FT. IN.	F FT. IN.	H FT. IN.	K FT. IN.	NOMINAL LENGTH FT. IN.	ACTUAL LENGTH FT. IN.	WEIGHT LBS.
		ABUTMENT																
		ABUT. NO. 1																
71	8S9	SLAB	E	20					25 2.000							25 2	25 2	4771
28	4S10	SLAB	E	20					25 2.000							25 2	25 2	471
60	5S11	SLAB	E	20					24 9.000							24 9	24 9	1549
30	4S12	SLAB	E	20					24 9.000							24 9	24 9	496
39	5S13	SLAB	E	20					2 6.000							2 6	2 6	102
		ABUT. NO. 3																
30	4S14	SLAB	E	20					21 2.000							21 2	21 2	424
64	8S15	SLAB	E	20					21 2.000							21 2	21 2	3617
50	5S16	SLAB	E	20					24 9.000							24 9	24 9	1291
26	4S17	SLAB	E	20					24 9.000							24 9	24 9	430
39	5S18	SLAB	E	20					2 6.000							2 6	2 6	102
		C.I.P. SLAB																
		OPTION																
336	5S1	SLAB	E	20					39 8.000							39 8	39 8	1 3901
315	5S2	SLAB	E	20					35 10.000							35 10	35 10	1 1773
1130	5S3	SLAB	E	20					41 3.000							41 3	41 3	4 8617
102	5S4	SLAB	E	20			V	2	39 5.000							39 5	39 5	
		INCREMENT =							3 4.000							3 4	3 4	2274
		8.525 INCH																
68	5S5	SLAB	E	20			V	2	39 3.000							39 3	39 3	
		INCREMENT =							3 6.000							3 6	3 6	1516
		13.000 INCH																
64	6S6	SLAB	E	20					60 0.000							60 0	60 0	5768
64	6S7	SLAB	E	20					43 3.000							43 3	43 3	4158
		P/C PANEL																
		OPTION																
*8	5S1	SLAB	E	20					39 8.000							39 8	39 8	1986
315	5S2	SLAB	E	20					35 10.000							35 10	35 10	1 1773
678	5S3	SLAB	E	20					41 3.000							41 3	41 3	2 9170
102	5S4	SLAB	E	20			V	2	39 5.000							39 5	39 5	
		INCREMENT =							3 4.000							3 4	3 4	2274
		8.625 INCH																
64	6S6	SLAB	E	20					60 0.000							60 0	60 0	5768
64	6S7	SLAB	E	20					43 3.000							43 3	43 3	4158
608	4S8	SLAB	E	20					3 2.000							3 2	3 2	1286
*48	5C1	S/F CURB	E	20					10 0.000							10 0	10 0	501
*4	5C2	S/F CURB	E	20					28 1.000							28 1	28 1	117
*4	5C3	S/F CURB	E	20					24 1.000							24 1	24 1	100
800	5R1	BARRIER CURB	E	19	S				2 6.000	3.500						2 10	2 8	2225
744	5R2	BARRIER CURB	E	15	S				2 6.125	3.500				2 6.000	3.000	2 10	2 9	2134
716	5R3	BARRIER CURB	E	19	S				17.000	6.000						23	22	1369
716	5R4	BARRIER CURB	E	27	S					6.000	11.125	7.000	12.000	9.125	6.375	3 0	2 10	2116
28	5R5	BARRIER CURB	E	27	S					6.000	11.125	18.000		9.125	6.375	2 11	2 10	83
28	5R6	BARRIER CURB	E	19	S				2 2.500	6.000						2 9	2 7	75
3	5R7	BARRIER CURB	E	27	S					6.000	8.125	18.000		6.625	4.625	2 8	2 7	22
8	5R8	BARRIER CURB	E	19	S				2 1.000	6.000						2 7	2 6	21

BILL OF REINFORCING STEEL

NO. REQ'D.	MARK NO. (SIZE MARK)	LOCATION	EPOXY (E)	SHAPE NO.	STIRRUP (S)	SUBSTR. (X)	VARIES (V)	NO. EACH	B FT. IN.	C FT. IN.	D FT. IN.	E FT. IN.	F FT. IN.	H FT. IN.	K FT. IN.	NOMINAL LENGTH FT. IN.	ACTUAL LENGTH FT. IN.	WEIGHT LBS.
8	5R9	BARRIER CURB	E	19	S				2 3.000	3.500						2 7	2 5	20
24	5R10	BARRIER CURB	E	10	S					2 1.000	7.500					4 10	4 7	115
48	5R11	BARRIER CURB	E	20					5 0.000							5 0	5 0	250
10	5R12	BARRIER CURB	E	20					28 0.000							28 0	28 0	232
2	5R13	BARRIER CURB	E	20					28 9.000							28 9	28 9	60
10	5R14	BARRIER CURB	E	20					24 0.000							24 0	24 0	250
2	5R15	BARRIER CURB	E	20					24 9.000							24 9	24 9	52
58	5R16	BARRIER CURB	E	20					9 9.000							9 9	9 9	590
112	5R17	BARRIER CURB	E	20					34 2.000							34 2	34 2	3991
6	4U24	BARRIER CURB	E	15	S				20.500	22.500	20.500	14.500	14.500	14.500	14.500	5 4	5 3	21
4	5U25	BARRIER CURB	E	15	S				20.500	22.500	20.500	14.500	14.500	14.500	14.500	5 4	5 3	22
6	4U26	BARRIER CURB	E	31	S				18.500	22.500	18.500					5 9	5 7	22
4	5U27	BARRIER CURB	E	31	S				18.500	22.500	18.500					5 9	5 7	23
4	5U28	BARRIER CURB	E	10	S				6.000	2 5.500	7.250					6 0	5 9	24
6	5U100	BARRIER CURB	E	10	S				6.000	2 5.500	14.000					6 7	6 3	39
12	6V22	BARRIER CURB	E	20					3 0.000							3 0	3 0	54
		END OF LIST																
*SLIP FORM OPTION ONLY																		

TWO ADDITIONAL #4-S14, #8-S15 & #5-R16 ARE INCLUDED IN THE BAR BILL FOR TESTING.

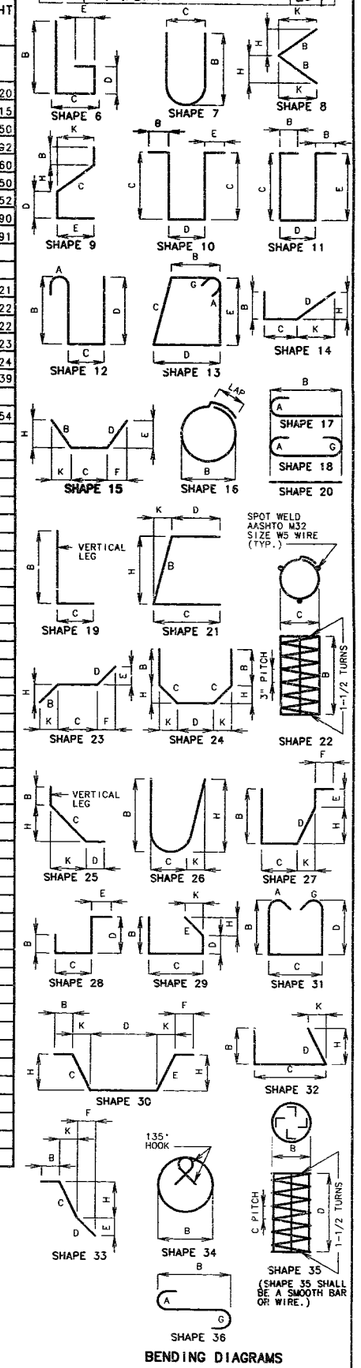

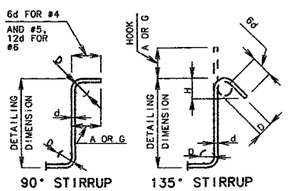

STIRRUP HOOK DIMENSIONS				
GRADES 40 - 50 - 60 KSI				
BAR SIZE	D (IN.)	90° HOOK	135° HOOK	
		HOOK A OR G	HOOK A OR G	APPROX. H
#4	2"	4-1/2"	4-1/2"	3"
#5	2-1/2"	6"	5-1/2"	3-3/4"
#6	4-1/2"	12"	8"	4-1/2"

NOTE: UNLESS OTHERWISE NOTED DIAMETER "D" IS THE SAME FOR ALL BENDS AND HOOKS ON A BAR.

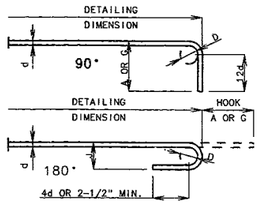

NOTE: THIS DRAWING IS NOT TO SCALE. FOLLOW DIMENSIONS.

END HOOK DIMENSIONS				
BAR SIZE	D (IN.)	ALL GRADES		
		180° HOOKS		90° HOOKS
		A OR G	J	A OR G
#3	2-1/4"	5"	3"	6"
#4	3"	6"	4"	8"
#5	3-3/4"	7"	5"	10"
#6	4-1/2"	8"	6"	12"
#7	5-1/4"	10"	7"	14"
#8	6"	11"	8"	16"
#9	9-1/2"	15"	11-3/4"	19"
#10	10-3/4"	17"	13-1/4"	22"
#11	12"	19"	14-3/4"	2'-0"
#14	18-1/4"	2'-3"	21-3/4"	2'-7"

NOTE:
ALL STANDARD HOOKS AND BENDS OTHER THAN 180 DEG. TO BE BENT WITH THE SAME PROCEDURE AS FOR 90 DEG. STD. HOOKS.
HOOKS AND BENDS SHALL BE IN ACCORDANCE WITH THE PROCEDURES AS SHOWN ON THIS SHEET.
E = EPOXY COATED REINFORCEMENT.
S = STIRRUP.
X = BAR IS INCLUDED IN SUBSTRUCTURE QUANTITIES.
V = BAR DIMENSIONS VARY IN EQUAL INCREMENTS BETWEEN DIMENSIONS SHOWN ON THIS LINE AND THE FOLLOWING LINE.
NO. EA. = NUMBER OF BARS OF EACH LENGTH.
NOMINAL LENGTHS ARE BASED ON OUT TO OUT DIMENSIONS SHOWN IN BENDING DIAGRAMS AND ARE LISTED FOR FABRICATORS USE. (NEAREST INCH)
ACTUAL LENGTHS ARE MEASURED ALONG CENTERLINE BAR TO THE NEAREST INCH.
PAYWEIGHTS ARE BASED ON ACTUAL LENGTHS.
FOUR ANGLE OR CHANNEL SPACERS ARE REQUIRED FOR EACH COLUMN SPIRAL. SPACERS ARE TO BE PLACED ON INSIDE OF SPIRALS. LENGTH AND WEIGHT OF COLUMN SPIRALS DO NOT INCLUDE SPLICES OR SPACERS.
REINFORCING STEEL (GRADE 60) = FY 60,000 PSI.

STD 90.8	REVISED
MAY 1974	OCT. 1991

DETAILED MAR. 1993
CHECKED MAR. 1993

188 2226

JACKSON COUNTY A-5249

STATE	PROJ. NO.	SHEET NO.
MO.	J4I0807	

FINAL PLANS

NOTE: BRIDGE SLOPE AT SIGN = .0419 FT. PER FT.

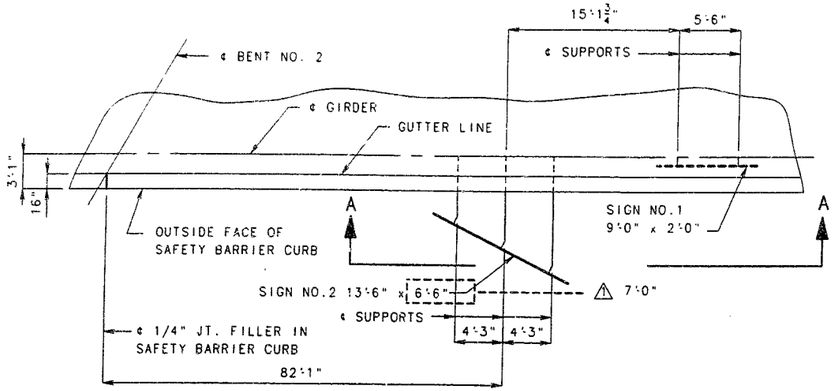

PART PLAN SHOWING LOCATION OF SIGNS NO 1 & 2

(EAST SIDE OF BRIDGE OVER WBL RTE. I-435)

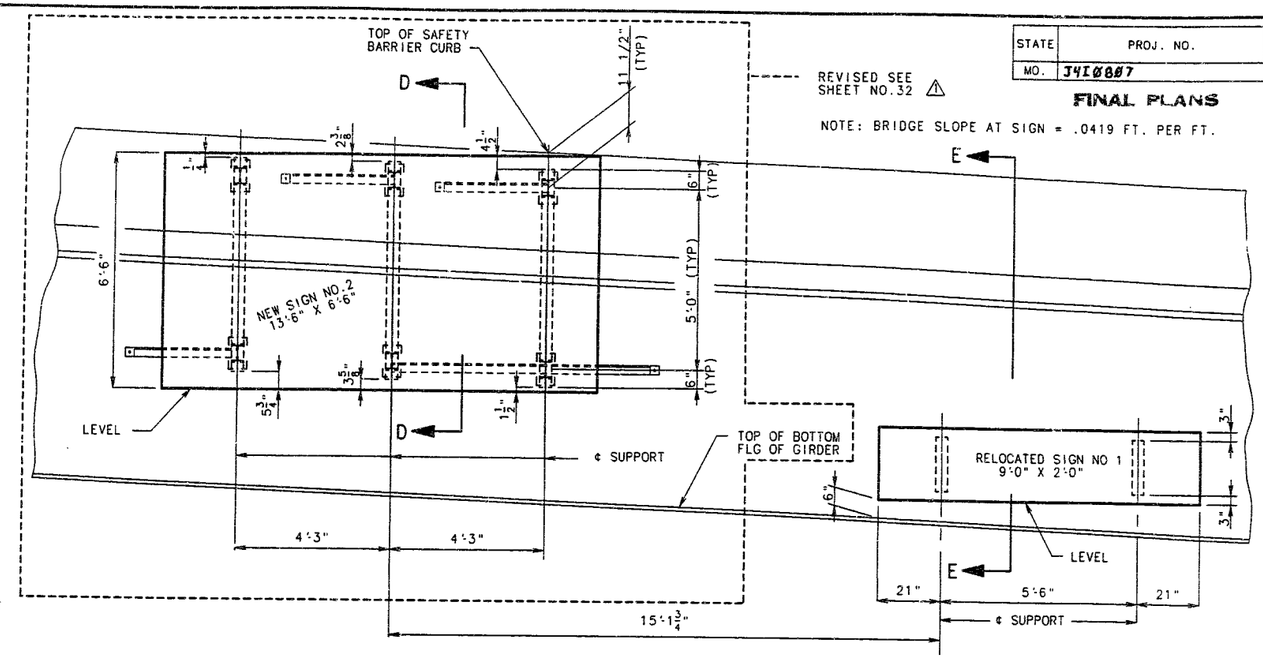

PART ELEVATION A-A

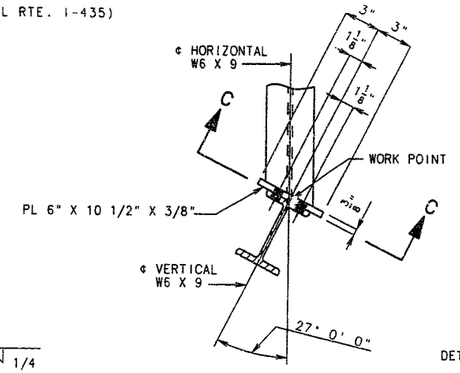

DETAIL "B"

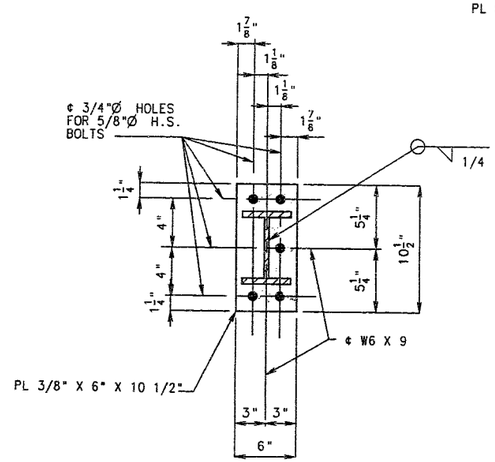

SECTION C-C

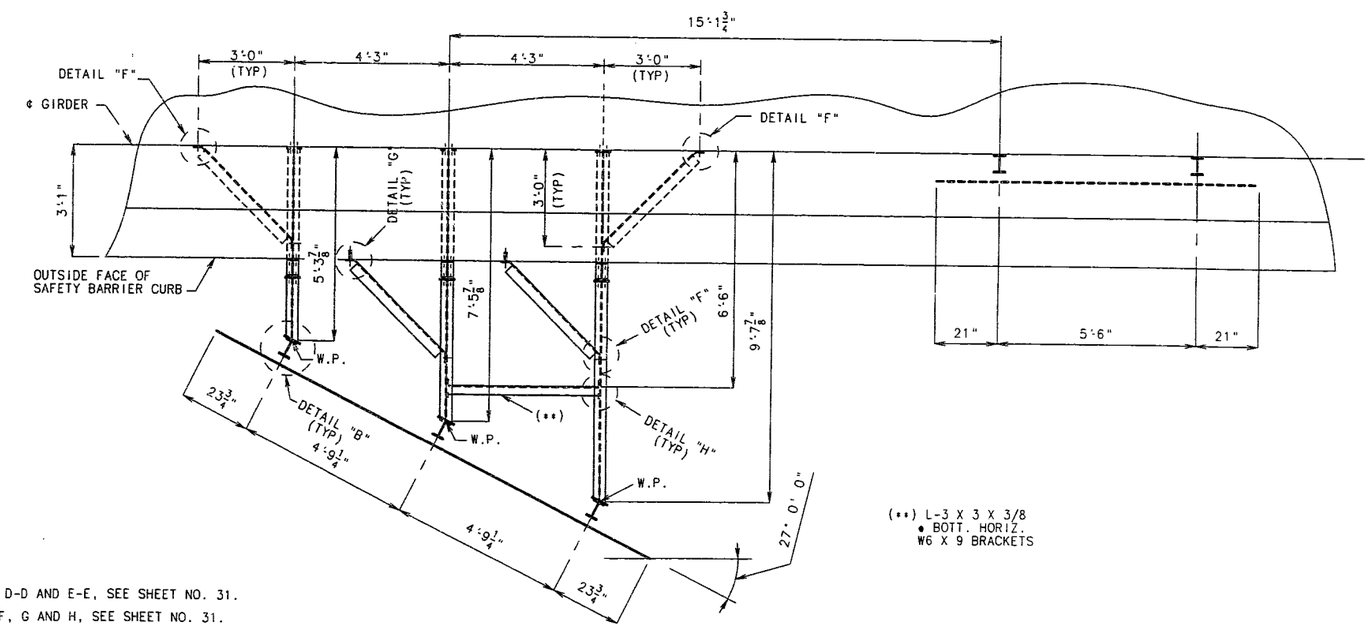

(**) L-3 X 3 X 3/8
♦ BOTT. HORIZ.
W6 X 9 BRACKETS

PART PLAN SHOWING
DIMENSIONS AND HORIZONTAL BRACING

GENERAL NOTES

CENTER AND LEVEL SIGNS ON BRACKETS.

ALL BOLTS, NUTS AND WASHERS SHALL BE GALVANIZED.

CONCRETE ANCHORS SHALL BE NON-DRILLING EXPANSION TYPE.THEY SHALL HAVE A CERTIFIED CONCRETE PULLOUT STRENGTH (ULTIMATE LOAD) OF AT LEAST 12,100 POUNDS IN 4000 PSI CONCRETE. THE HOLE SHALL BE PRE-DRILLED WITH A CONVENTIONAL CARBIDE MASONRY BIT.

ALL STRUCTURAL STEEL SHALL BE A.S.T.M. A36, GALVANIZED.

THE COST OF FURNISHING AND ERECTING THE SIGN SUPPORTS, INCLUDING THE CONCRETE ANCHORS COMPLETE-IN-PLACE, SHALL BE PAID FOR AS FABRICATED SIGN SUPPORT BRACKETS, LUMP SUM.

NOTE:

FOR SECTIONS D-D AND E-E, SEE SHEET NO. 31.

FOR DETAILS F, G AND H, SEE SHEET NO. 31.

SIGN SUPPORT BRACKETS FOR SIGNS NO. 1 & 2

DETAILED SEPT. 1992
CHECKED AUG. 1993

NOTE: THIS DRAWING IS NOT TO SCALE. FOLLOW DIMENSIONS.

REVISED 2-8-1995

JACKSON COUNTY

A-5249

189

STATE	PROJ. NO.	SHEET NO.
MO.	J4I0007	

FINAL PLANS

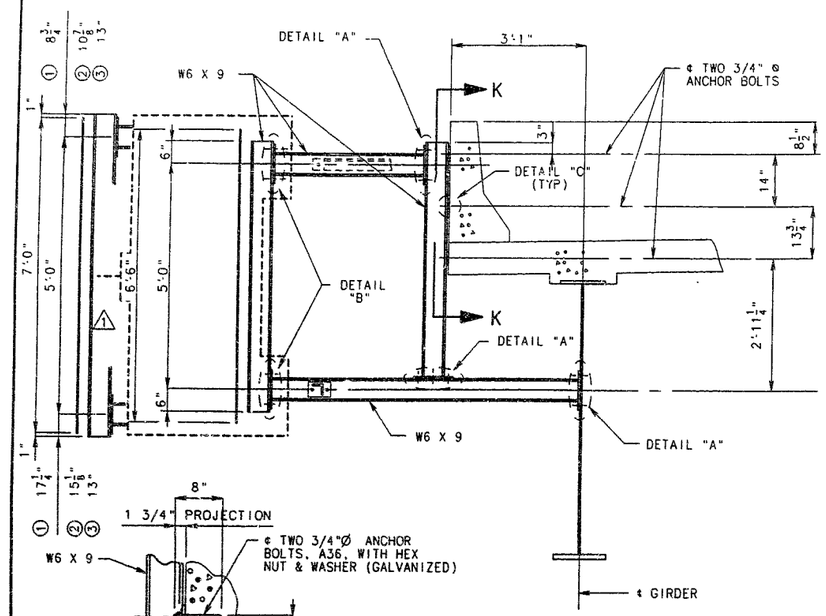

SECTION D-D

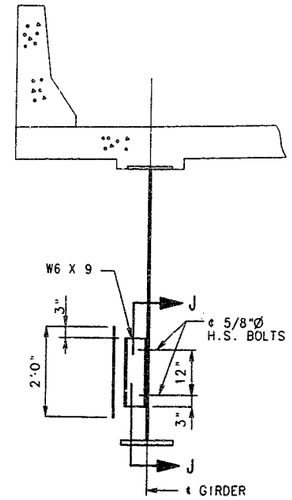

SECTION E-E

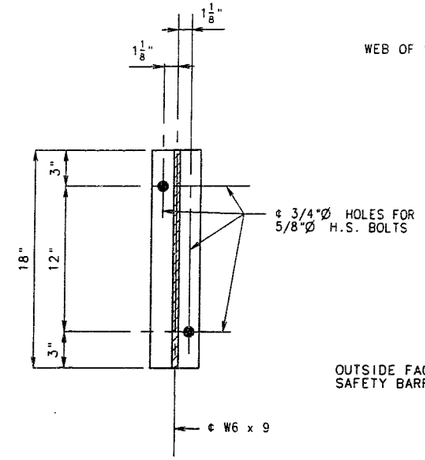

SECTION J-J

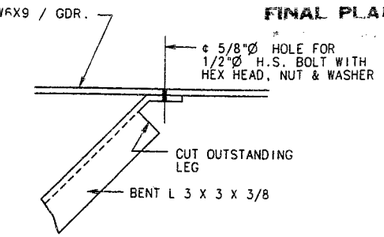

DETAIL "F"

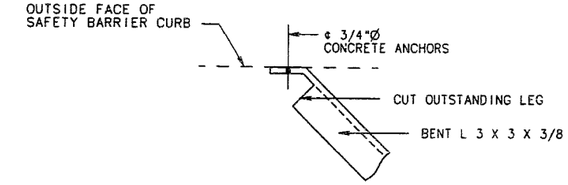

DETAIL "G"

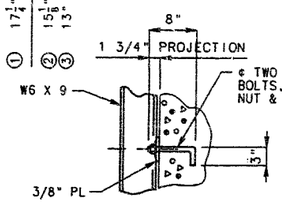

DETAIL "C"

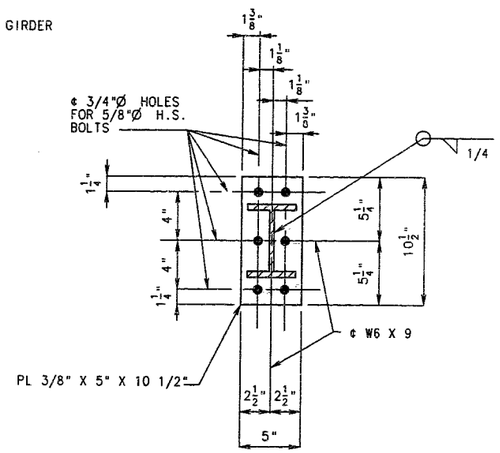

DETAIL "A"

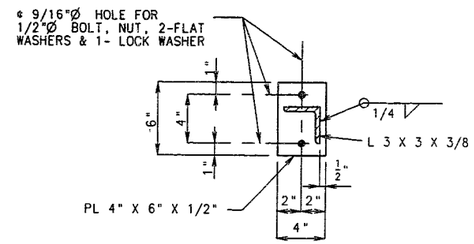

SECTION M-M

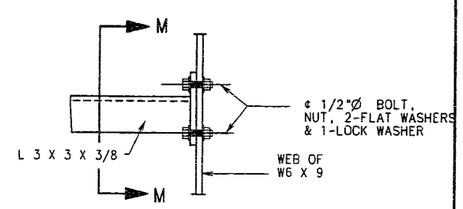

DETAIL "H"

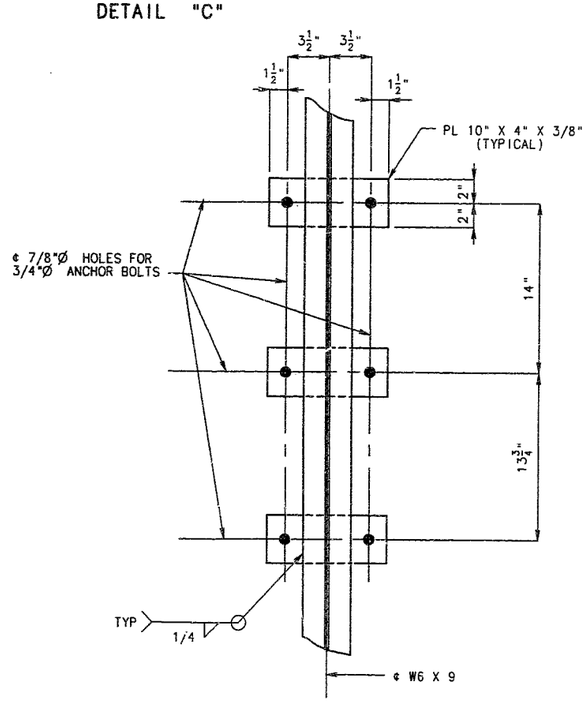

SECTION K-K

NOTE:

FOR LOCATION OF SECTIONS D-D AND E-E, SEE SHEET NO 30.
FOR LOCATION OF DETAILS "F", "G" AND "H", SEE SHEET NO 30.
FOR DETAIL "B", SEE SHEET NO. 30.

DETAILED SEPT.1992
CHECKED AUG.1993

NOTE: THIS DRAWING IS NOT TO SCALE. FOLLOW DIMENSIONS.

1 REVISED 2-8-1995

JACKSON COUNTY

A-5249

190

STATE	PROJ. NO.	SHEET NO.
MO.	J4I0807	

FINAL PLANS

NOTE: BRIDGE SLOPE AT SIGN = .02077 FT. PER FT.

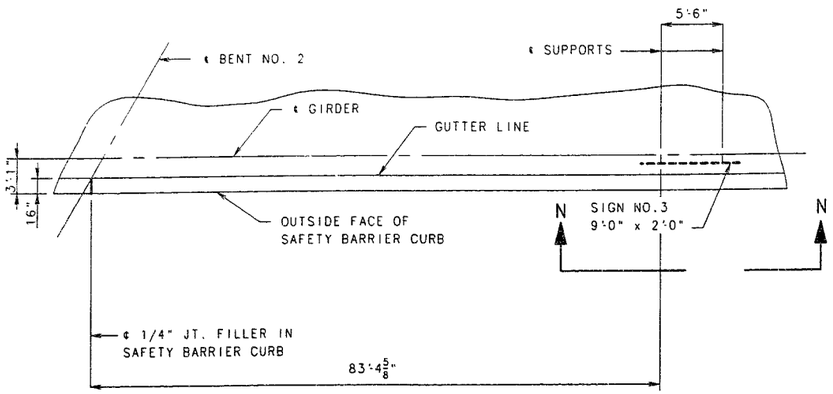

PART PLAN SHOWING LOCATION OF SIGN NO. 3

(WEST SIDE OF BRIDGE OVER EBL RTE. I-435)

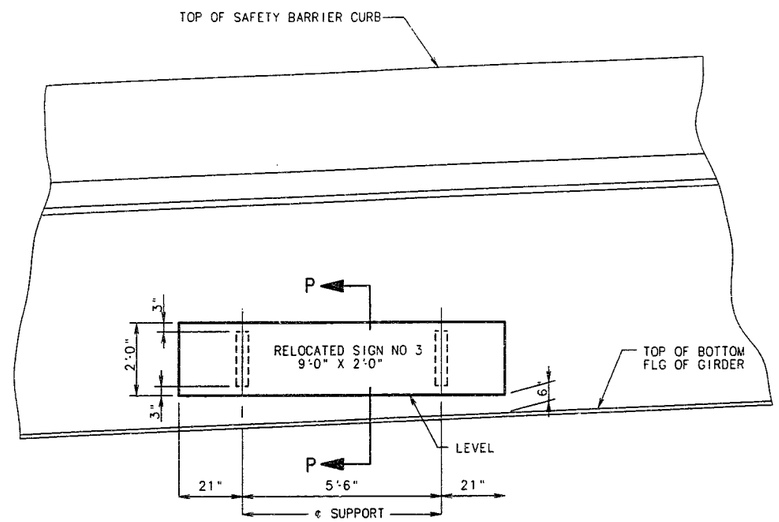

PART ELEVATION N-N

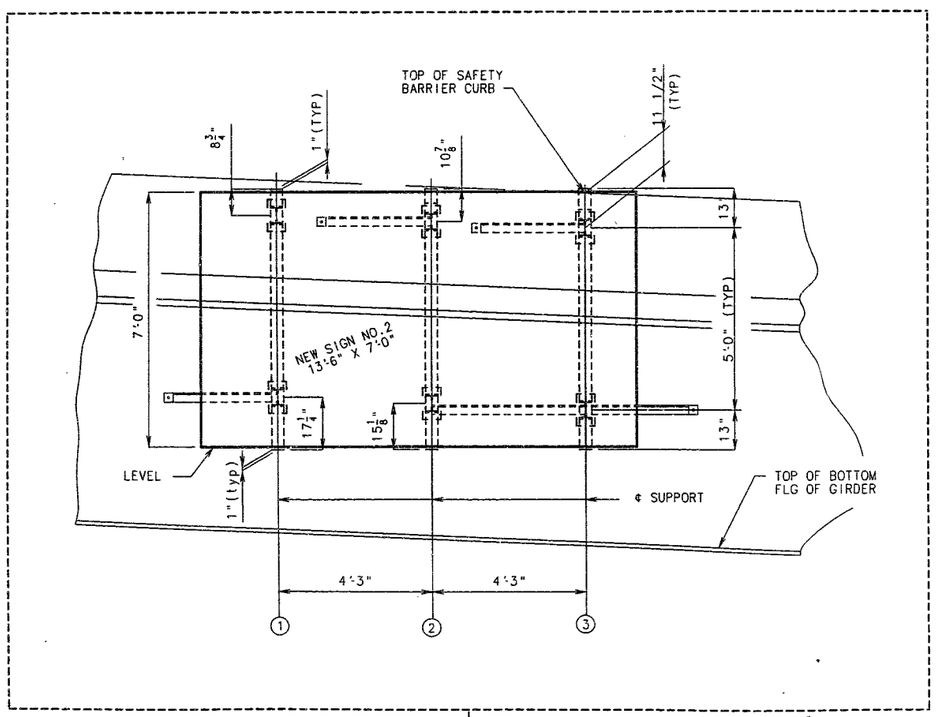

REVISED FROM SHEET NO. 30 △1

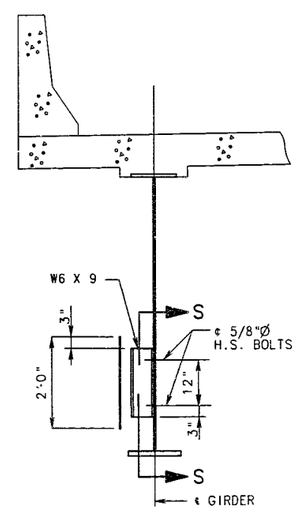

SECTION P-P

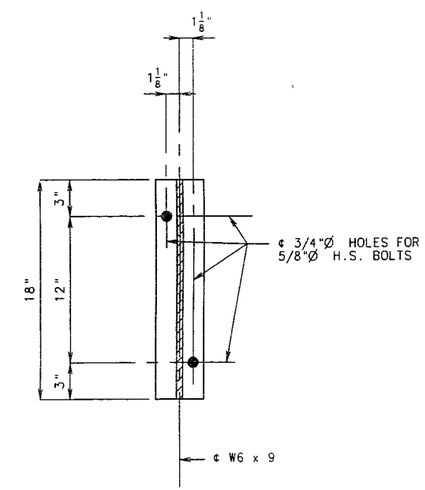

SECTION S-S

SIGN SUPPORT BRACKET FOR SIGN NO. 3

DETAILED SEPT. 1992
CHECKED AUG. 1993

NOTE: THIS DRAWING IS NOT TO SCALE. FOLLOW DIMENSIONS.

△1 REVISED 2-8-1995

JACKSON COUNTY

A-5249

191

STATE	PROJ. NO.	SHEET NO.
MO.	J4I0807	205

FINAL PLANS

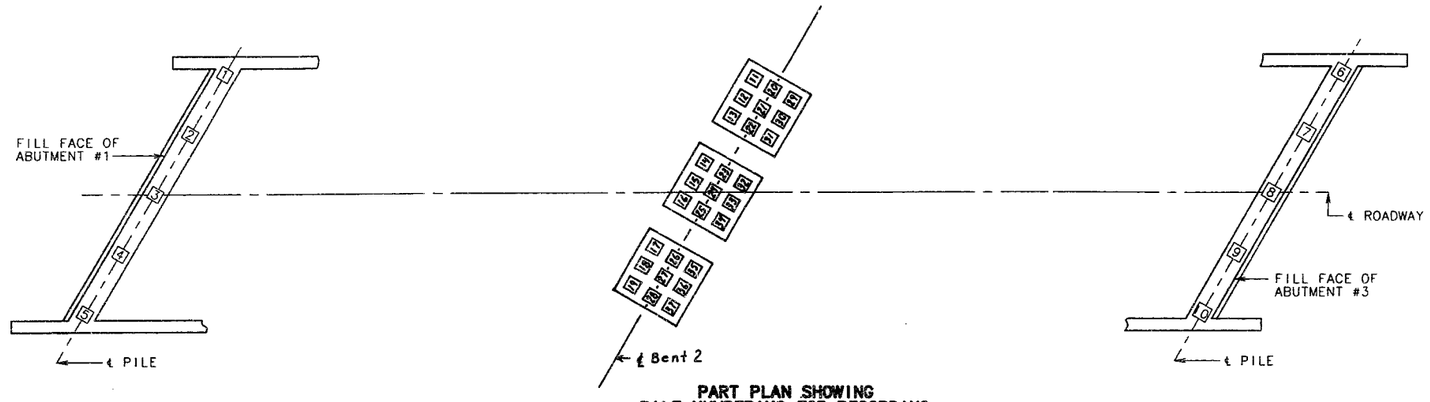

PART PLAN SHOWING PILE NUMBERING FOR RECORDING "AS BUILT PILE" DATA

"AS BUILT PILE" DATA

PILE NO.	LENGTH IN PLACE (FT.)	COMPUTED BEARING (TONS)	Pre-Bore (Ft)	REMARKS
				Abut #1
1	18	98.3	9	HP 10x42, All pile driven to practical refusal.
2	16	Abs. Ref.	9	" " "
3	16 ~~18~~	98.3	9	" " "
4	15	Abs. Ref.	14	" " "
5	15	Abs. Ref.	14	" " "
	88	Subtotal	55	
				Abut #3
6	15	71.5	10	HP 10x42, All pile driven to practical refusal.
7	14	73.8	9	" " "
8	14	84.3	9	" " "
9	14	90.8	9	" " "
10	12	107.3	9	" " "
	69	Subtotal	46	

"AS BUILT PILE" DATA

PILE NO.	LENGTH IN PLACE (FT.)	COMPUTED BEARING (TONS)	Pre-Bore (Ft)	REMARKS
				Bent #2
11	11	243.8	11	HP 10x42, All pile driven to practical refusal.
12	11	243.8	11	" " "
13	11	203.2	11	" " "
14	13	Abs. Ref.	11	" " "
15	12	Abs. Ref.	11	" " "
16	13	Abs. Ref.	11	" " "
17	13	Abs. Ref.	11	" " "
18	14	121.9	11	" " "
19	13	135.5	11	" " "
20	11	254.8	11	" " "
21	11	254.8	11	" " "
22	11	243.8	11	" " "
23	13	Abs. Ref.	11	" " "
24	13	Abs. Ref.	11	" " "
25	12	Abs. Ref.	11	" " "
26	13	Abs. Ref.	11	" " "
27	15	106.2	11	" " "
28	16	Abs. Ref.	11	" " "
29	10	110.8	11	" " "
30	10	110.8	11	" " "
31	11	203.2	11	" " "
32	12	Abs. Ref.	11	" " "
33	13	Abs. Ref.	11	" " "
34	12	Abs. Ref.	11	" " "
35	15	110.8	11	" " "
36	13	203.2	11	" " "
37	14	101.6	11	" " "
	336	Subtotal	297	
	88	"	55	
	69	"	46	
	493	Total	398	

"AS BUILT PILE" DATA

PILE NO.	LENGTH IN PLACE (FT.)	COMPUTED BEARING (TONS)	REMARKS

NOTE: INDICATE IN REMARK COLUMN:
A.) IF PILING WERE DRIVEN TO PRACTICAL REFUSAL.
B.) PILE BATTER IF OTHER THAN SHOWN ON BENT DETAIL SHEET.
C.) TYPE OF PILING USED.

~~NOTE: THIS SHEET TO BE COMPLETED BY MHTD CONSTRUCTION PERSONNEL.~~

MISC. PILES - PLAN
PILES IN PLACE
MAY 1993
REVISED:

DETAILED MAR. 1993
CHECKED MAR. 1993

NOTE: THIS DRAWING IS NOT TO SCALE. FOLLOW DIMENSIONS.

JACKSON COUNTY A-5249

STATE	PROJ. NO.	SHEET NO.
MO.		

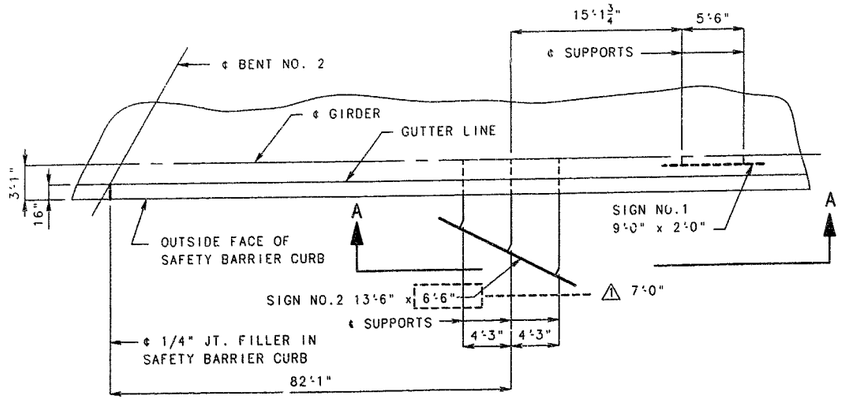

PART PLAN SHOWING LOCATION OF SIGNS NO 1 & 2

(EAST SIDE OF BRIDGE OVER WBL RTE. I-435)

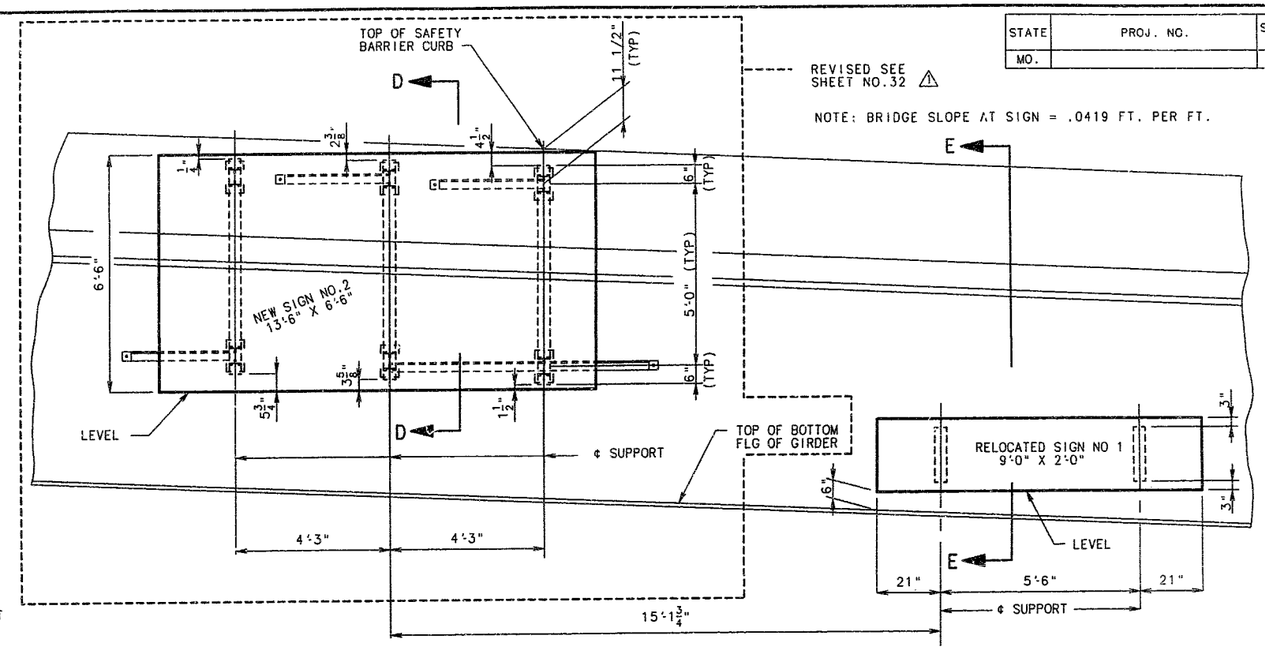

PART ELEVATION A-A

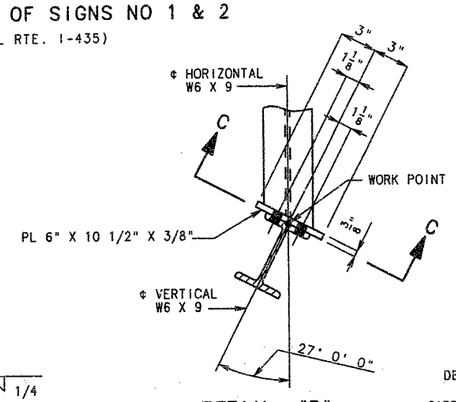

DETAIL "B"

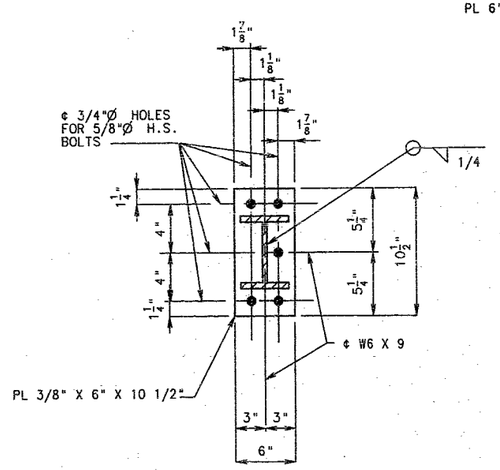

SECTION C-C

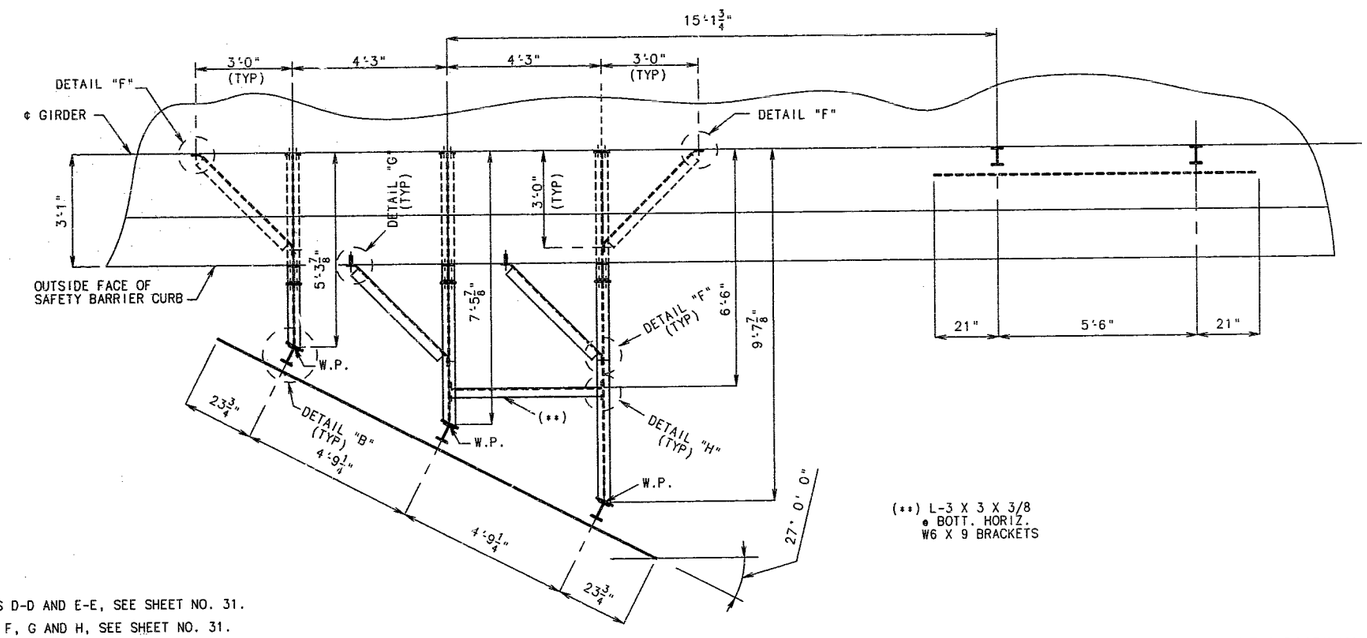

(**) L-3 X 3 X 3/8 @ BOTT. HORIZ. W6 X 9 BRACKETS

PART PLAN SHOWING DIMENSIONS AND HORIZONTAL BRACING

GENERAL NOTES

CENTER AND LEVEL SIGNS ON BRACKETS.

ALL BOLTS, NUTS AND WASHERS SHALL BE GALVANIZED.

CONCRETE ANCHORS SHALL BE NON-DRILLING EXPANSION TYPE.THEY SHALL HAVE A CERTIFIED CONCRETE PULLOUT STRENGTH (ULTIMATE LOAD) OF AT LEAST 12,100 POUNDS IN 4000 PSI CONCRETE. THE HOLE SHALL BE PRE-DRILLED WITH A CONVENTIONAL CARBIDE MASONRY BIT.

ALL STRUCTURAL STEEL SHALL BE A.S.T.M. A36, GALVANIZED.

THE COST OF FURNISHING AND ERECTING THE SIGN SUPPORTS, INCLUDING THE CONCRETE ANCHORS COMPLETE-IN-PLACE, SHALL BE PAID FOR AS FABRICATED SIGN SUPPORT BRACKETS, LUMP SUM.

NOTE:

FOR SECTIONS D-D AND E-E, SEE SHEET NO. 31.

FOR DETAILS F, G AND H, SEE SHEET NO. 31.

SIGN SUPPORT BRACKETS FOR SIGNS NO. 1 & 2

DETAILED SEPT. 1992
CHECKED AUG. 1993

NOTE: THIS DRAWING IS NOT TO SCALE. FOLLOW DIMENSIONS.

REVISED 2-8-1995

SHEET NO. 30 OF 33

JACKSON COUNTY

A-5249

475

STATE	PROJ. NO.	SHEET NO.
MO.		

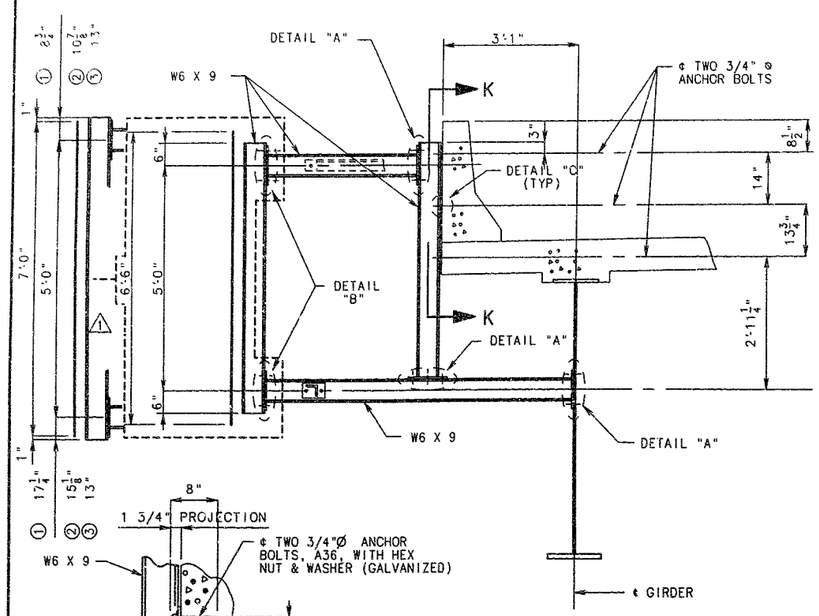

SECTION D-D

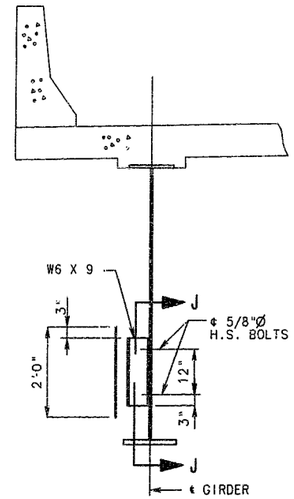

SECTION E-E

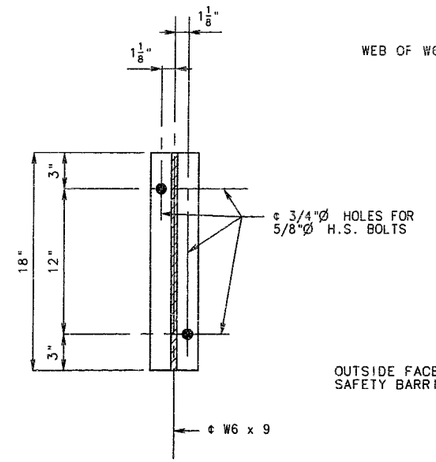

SECTION J-J

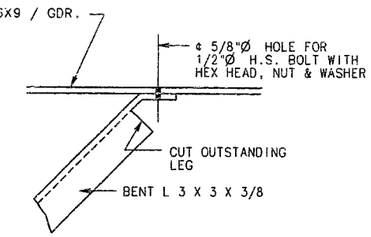

DETAIL "F"

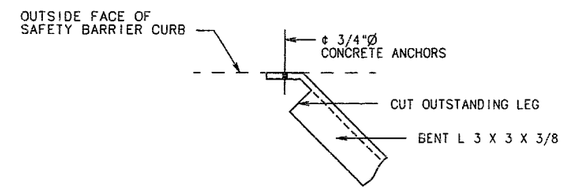

DETAIL "G"

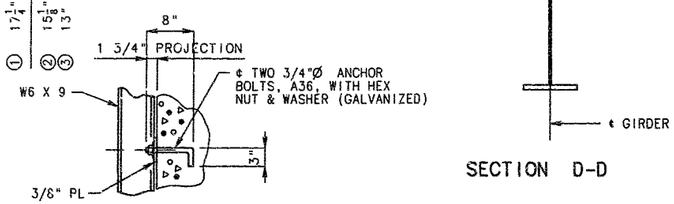

DETAIL "C"

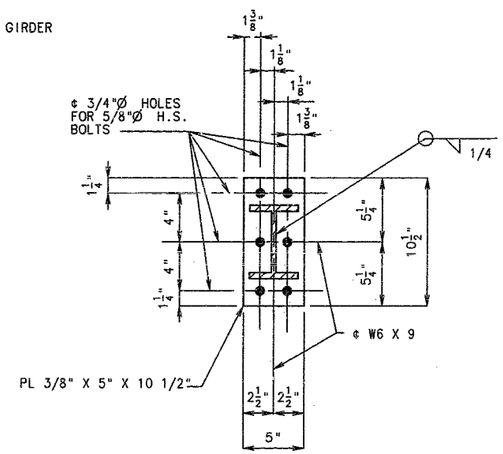

DETAIL "A"

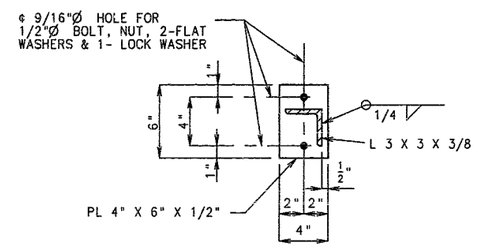

SECTION M-M

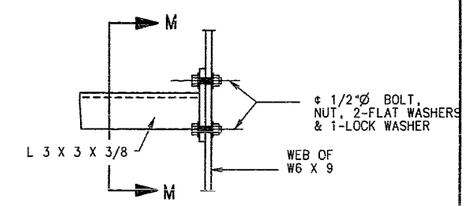

DETAIL "H"

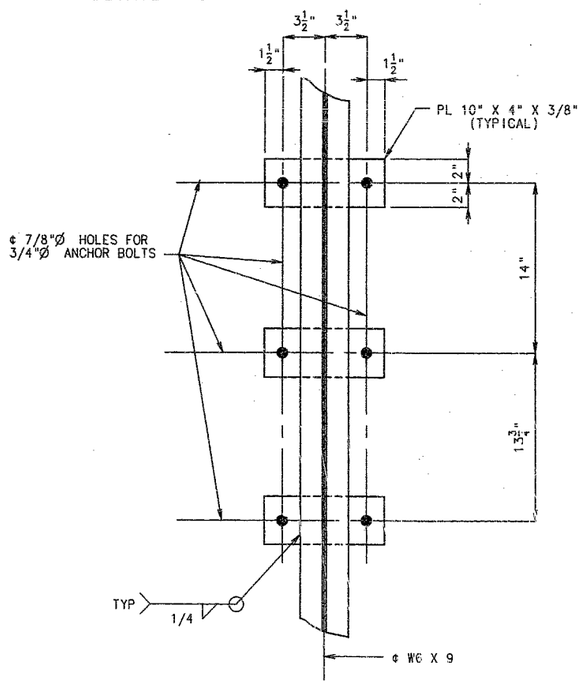

SECTION K-K

NOTE:

FOR LOCATION OF SECTIONS D-D AND E-E, SEE SHEET NO 30.
FOR LOCATION OF DETAILS "F", "G" AND "H", SEE SHEET NO 30.
FOR DETAIL "B", SEE SHEET NO. 30.

DETAILED SEPT.1992
CHECKED AUG.1993

NOTE: THIS DRAWING IS NOT TO SCALE. FOLLOW DIMENSIONS.

1 REVISED 2-8-1995

JACKSON COUNTY

A-5249

946

STATE	PROJ. NO.	SHEET NO.
MO.		

NOTE: BRIDGE SLOPE AT SIGN = .02077 FT. PER FT.

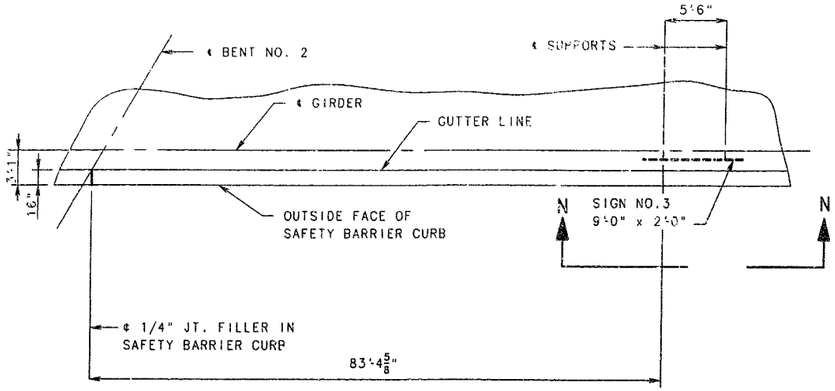

PART PLAN SHOWING LOCATION OF SIGN NO. 3
(WEST SIDE OF BRIDGE OVER EBL RTE. I-435)

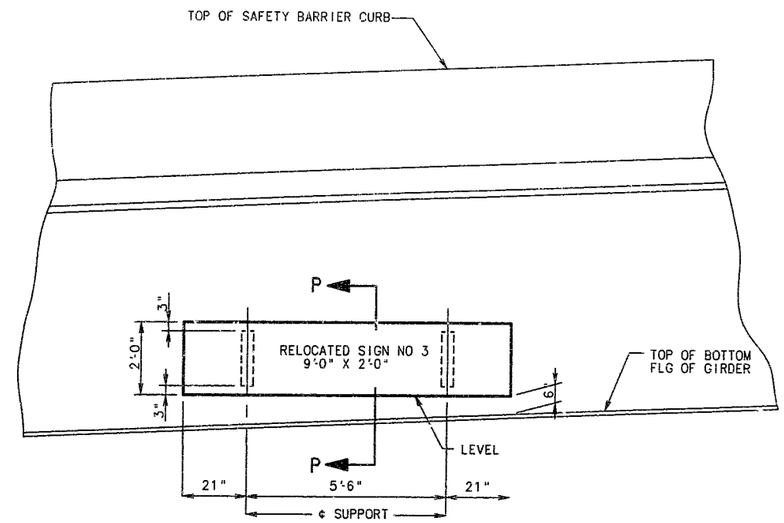

PART ELEVATION N-N

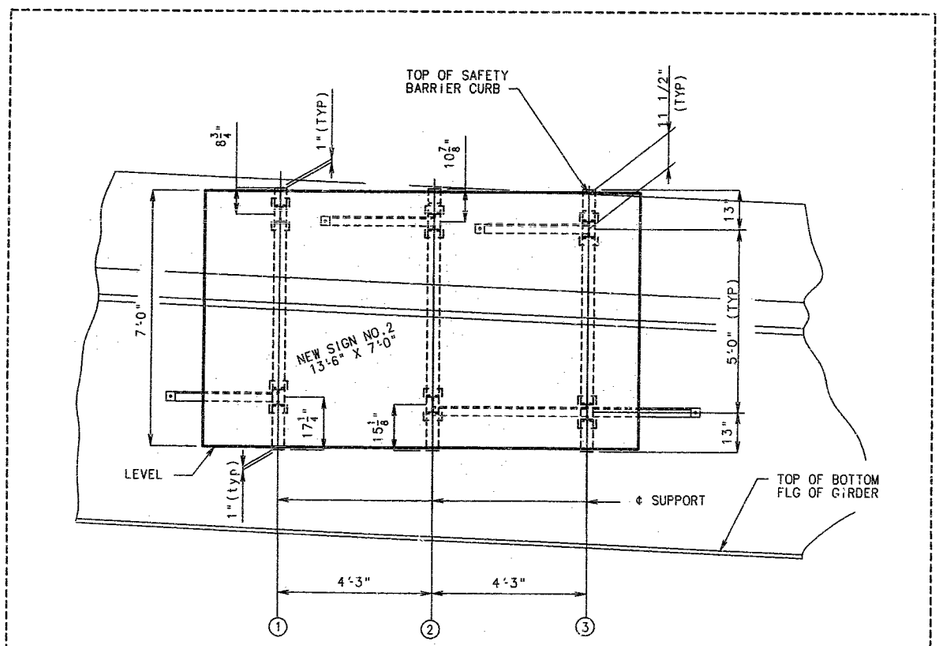

REVISED FROM SHEET NO. 30 △1

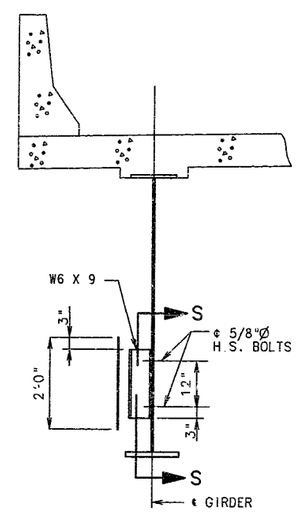

SECTION P-P

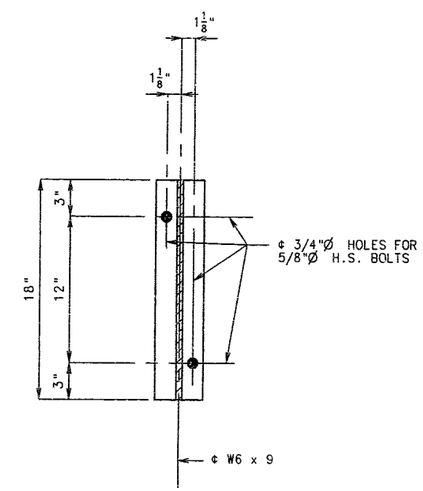

SECTION S-S

SIGN SUPPORT BRACKET
FOR SIGN NO. 3

DETAILED SEPT. 1992
CHECKED AUG. 1993

NOTE: THIS DRAWING IS NOT TO SCALE. FOLLOW DIMENSIONS.

△1 REVISED 2-8-1995

JACKSON COUNTY A-5249

477