MISSOURI STATE HIGHWAY DEPARTMENT

FEL. ROAD DIST. NO.	STATE	FED. AID PROJ. NO.	FISCAL YEAR	SHEET NO.	TOTAL SHEETS
5	MO.		19	52	

(54'-81'-90'-69') Cont. Welded ℄ Girder (Composite)

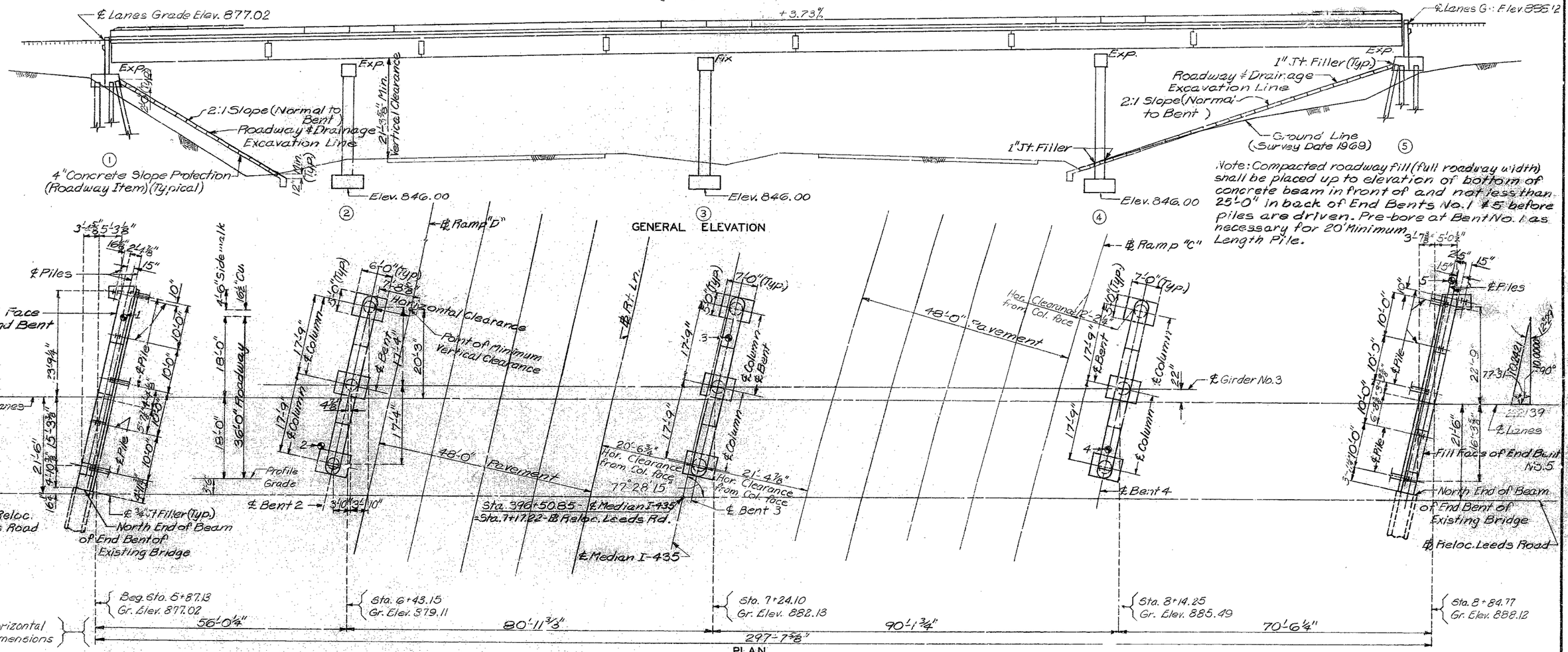

Note: A minimum vertical clearance of 15'-0" from crown of existing lanes and a minimum lateral clearance of 40'-0" centered on existing lanes shall be maintained during construction.

Note: In no case shall footings of Bents No. 2, 3, and 4 be placed higher than elevations shown.

ESTIMATED QUANTITIES				
ITEM		SUBSTR.	SUPERSTR.	TOTAL
Class I Excavation for Structures	Cu. Yd.	170		170
Steel Piles in Place (10")	Lin. Ft.	300		300
Class B Concrete	Cu. Yd.	185.5		185.5
Class B1 Concrete	Cu. Yd.		416.0	416.0
Reinforcing Steel	Lb.	30,070	120,680	150,750
Conduit System on Structure (K.C. Power & Light)	Lump Sum			1
Fabricated Structural Carbon Steel	Lb.		269,220	269,220
Painting (2 Coats)	Ton		134.0	134.0
Bridge Rail (One Tube)	Lin. Ft.		588	588
High Strength Bridge Rail (Two Tube)	Lin. Ft.		308	308

Note: For Boring Data, See Sheet No. 5 of 16. "●" Indicates location of boring.

B.M. Elev. 888.95' ~ NE corner N.W.W. Leeds Rd. bridge over I-435 Rt. Sta. 12+55± (Exist. Leeds Rd).

Note: All concrete and reinforcement in end posts, parapets, and curbs is included with superstructure quantities.

BRIDGE: LEEDS ROAD UNDERPASS

STATE ROAD INTERSTATE ROUTE 435

IN KANSAS CITY

PROJECT NO. 4-U-435-46 (RTE. I-435) **STA.** 5+87.13

JACKSON COUNTY

SUBMITTED BY W. R. Carney BRIDGE ENGINEER DATE 12-21-71

APPROVED BY Robert N. Hunter CHIEF ENGINEER DATE 12-21-71

STD. 611.60
STD. 706.30A
A-2851

DESIGNED JULY 1970 BY RAITHEL, CHUANG
DETAILED JULY 1970 BY POLACEK, MOLAI
CHECKED OCT. 1970 BY CHUANG, RAITHEL

Note: This drawing is not to scale. Follow dimensions.

Sheet No. 1 of 16.

FINAL PLANS

438

MISSOURI STATE HIGHWAY DEPARTMENT

FED. ROAD DIST. NO.	STATE	FED. AID PROJ. NO.	FISCAL YEAR	SHEET NO.	TOTAL SHEETS
5	MO.		19	53	

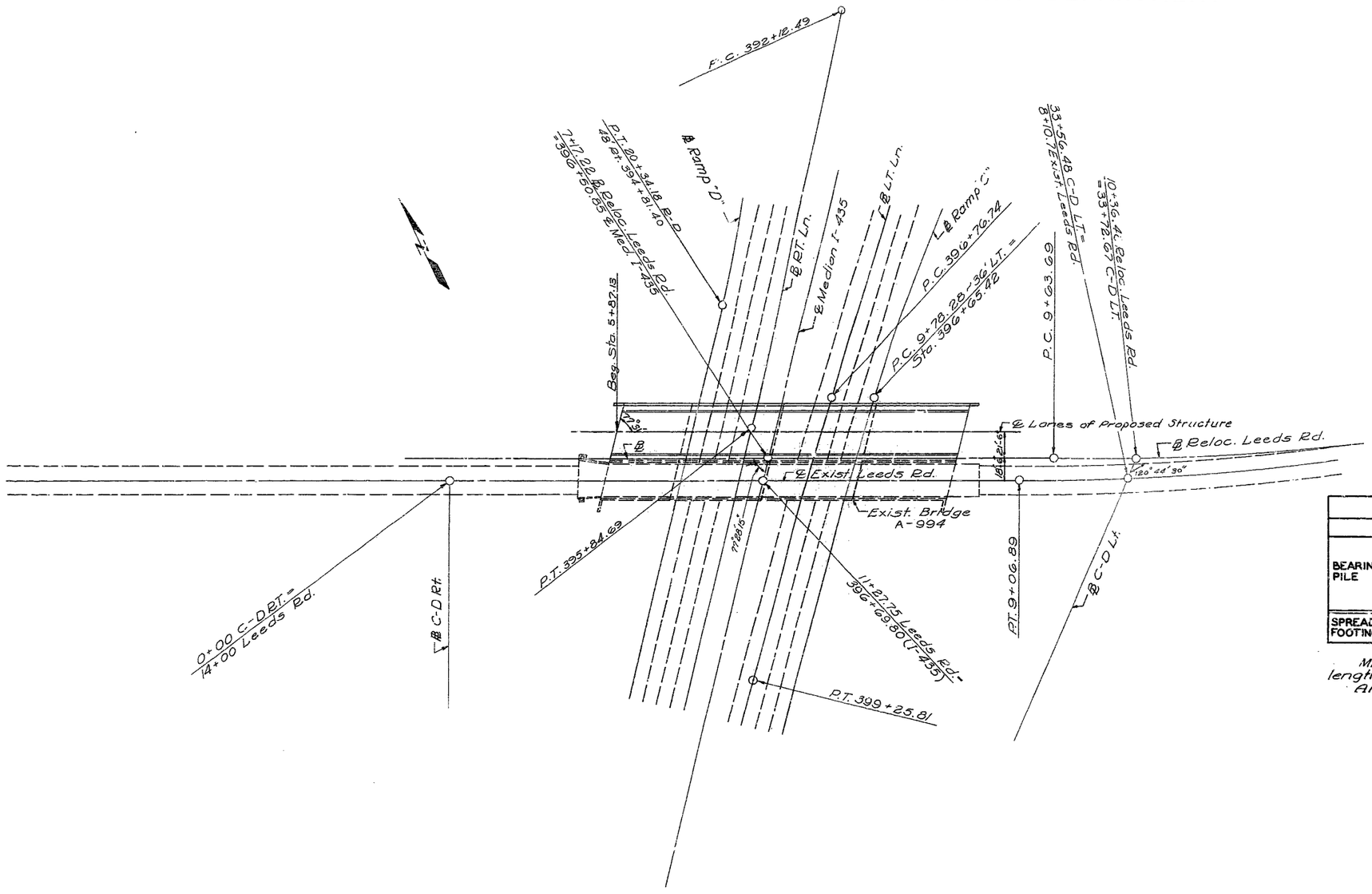

LOCATION SKETCH

GENERAL NOTES:

Design Specifications: A.A.S.H.O. - 1969

Design Loading:

HS 20-44, 15 #/sq. ft. Future Wearing Surface
Earth 120#, Equivalent Fluid Pressure 30#
Fatigue Stress - Case I.

Design Unit Stresses:

Class B Concrete (substructure) fc = 1,200 psi
Class B1 Concrete (superstructure) fc = 1,600 psi
Reinforcing Steel fs = 20,000 psi
Structural Steel fs = 20,000 psi
Steel Pile fb = 9000 psi

Fabricated Steel:

Field connections, High Strength Bolts 3/4" ϕ, holes 13/16" ϕ except as noted.

Minimum clearance to reinforcing steel shall be 1½" unless otherwise shown.

Paint:

Shop, one coat red lead, in accordance with std. spec. 712.12 and 1045.4 or 1045.5; Surfaces of shear connectors and girder flange plates in contact with concrete shall not be painted.

Field, two coats by contractor, first coat brown, second coat aluminum in accordance with std. Spec. 712.12.

PILE & FOOTING DATA

	BENT NO.	1	2	3	4	5
BEARING PILE	Pile Type and Size	10BP42				10BP42
	Number	6				6
	Approximate Length Ft.	20				30
	Design Bearing Tons	52				52
	Hammer Energy req'd. Ft.Lbs.	12800				12800
SPREAD FOOTINGS	Foundation Material		Shale	Shale	Shale	
	Design Bearing Tons/Sq.Ft.		7	8	8	

Minimum energy requirement of hammer based on plan length and design bearing value of piles.
All pile shall be driven to practical refusal.

439

SPS
REVISED
STD.

DETAILED JULY 1970 BY MOLAI
CHECKED OCT. 1970 BY CHUANG

Note: This drawing is not to scale. Follow dimensions.

Sheet No. 2 of 16.

JACKSON COUNTY

A-2851

MISSOURI STATE HIGHWAY DEPARTMENT

				54	

NO. REQD.	SIZE MARK	LOCATION	SHAPE NO.	STIRRUP	SUBSTR.	VARIES	NO. EA.	B FT IN.	C FT IN	D FT IN	E FT. IN.	F FT. IN.	H FT. IN.	K FT IN.	NOMINAL LENGTH FT. IN.	ACTUAL LENGTH FT. IN.	WEIGHT LBS.
		SUBSTRUCTURE															
		BENT 1															
4	6F2	BACKWALL	15		X			12.125	3 11.500	12.125	9.500	7.500	9.500	7.500	6 0	5 11	36
2	6H1	BACKWALL	20		X			45 7.000							45 7	45 7	137
12	4H2	BACKWALL	20		X			23 4.000							23 4	23 4	187
8	9H3	BEAM	18		X			45 0.000							47 0	47 0	1278
2	6H4	BEAM	20		X			45 0.000							45 0	45 0	135
2	6H6	WING	20		X			12 9.000							12 9	12 9	38
8	6H7	WING	20		X	V	2	12 6.500							12 7	12 7	
		INCR. = 29.625 IN.						5 1.500							5 2	5 2	107
2	6T1	WING	25		X			15.250	9 0.625	2 0.000			3 4.750	8 4.750	12 4	12 3	37
2	6T3	CURTAIN WALL	19		X			5 5.000	3 5.000						8 10	8 8	26
46	5U1	BEAM	13	S	X			2 9.000	2 10.000	3 5.000	2 9.000				12 9	12 5	596
11	4U2	BEAM	10	S	X				6.000	2 9.000					3 9	3 7	26
5	7U5	BEAM	14		X			4 9.750	2 5.000	4 2.375			4 1.250	10.750	11 5	11 3	115
5	4U6	CURTAIN WALL	10		X				3 5.375	6.000					7 5	7 2	14
84	5V1	BACKWALL	20		X			6 10.000							6 10	6 10	599
8	5V3	WING	19		X			6 7.000	6.000						7 1	7 0	58
2	6V4	BEAM	20		X			2 9.000							2 9	2 9	8
2	4V5	CURTAIN WALL	20		X			5 0.000							5 0	5 0	7
18	4V6	WING	20		X	V	2	5 1.250							5 1	5 1	
		INCR. = 5.250 IN.						18.750							19	19	40
6	5V7	BACKWALL	20		X			7 7.000							7 7	7 7	47
10	2W1	BEAM	22		X			12.000	9.125						19 9	19 9	33
		BENT 2															
27	8D4	FOOTING	20		X			4 0.000							4 0	4 0	288
30	5D5	FOOTING	18		X			5 6.000							6 8	6 8	209
18	5D6	FOOTING	18		X			4 6.000							5 8	5 8	106
4	10H9	BEAM	20		X			14 6.000							14 6	14 6	250
2	6H11	BEAM	20		X			37 4.000							37 4	37 4	112
10	10H12	BEAM	20		X			37 4.000							37 4	37 4	1606
5	9H14	BEAM	17		X			30 0.000							31 0	31 0	527
5	9H15	BEAM	17		X			11 7.000							12 7	12 7	214
8	7H16	BEAM	7		X			3 9.000	2 5.000						8 9	8 9	143
63	3P2	COLUMN	16		X			2 3.000							7 9	7 9	184
13	4U13	BEAM	13	S	X			2 5.000	3 0.500	2 5.000	3 0.500				11 8	11 5	99
34	4U14	BEAM	13	S	X			2 5.000	2 9.000	2 5.000	2 9.000				11 1	10 10	246
11	4U15	BEAM	10	S	X				6.000	2 5.000					3 5	3 3	24
2	4U16	BEAM	10	S	X				6.000	21.000					2 9	2 7	3
27	8V10	COLUMN	20		X			23 3.000							23 3	23 3	1676
10	2W1	BEAM	22		X			12.000	9.125						19 9	19 9	33

NO. REQD.	SIZE MARK	LOCATION	SHAPE NO.	STIRRUP	SUBSTR.	VARIES	NO. EA.	B FT IN.	C FT IN.	D FT IN.	E FT. IN.	F FT IN	H FT. IN.	K FT IN.	NOMINAL LENGTH FT. IN.	ACTUAL LENGTH FT. IN.	WEIGHT LBS.
		BENT 3															
30	10D1	FOOTING	20		X			5 0.000							5 0	5 0	645
24	6D2	FOOTING	18		X			6 6.000							7 10	7 10	282
21	5D3	FOOTING	20		X			4 6.000							4 6	4 6	99
8	7H8	BEAM	7		X			4 0.000	2 11.000						9 7	9 7	157
4	10H9	BEAM	20		X			14 6.000							14 6	14 6	250
5	10H10	BEAM	17		X			30 0.000							31 1	31 1	669
2	6H11	BEAM	20		X			37 4.000							37 4	37 4	112
11	10H12	BEAM	20		X			37 4.000							37 4	37 4	1767
5	10H13	BEAM	17		X			11 7.000							12 8	12 8	273
75	3P1	COLUMN	16		X			2 9.000							9 3	9 3	261
13	4U8	BEAM	13	S	X			2 11.000	3 0.625	2 11.000	3 0.625				12 8	12 5	108
35	4U9	BEAM	13	S	X			2 11.000	2 9.000	2 11.000	2 9.000				12 1	11 10	277
4	4U10	BEAM	10	S	X				6.000	2 3.000					3 3	3 1	8
11	4U11	BEAM	10	S	X				6.000	2 11.000					3 11	3 9	28
30	10V8	COLUMN	20		X			27 0.000							27 0	27 0	3485
10	2W1	BEAM	22		X			12.000	9.125						19 9	19 9	13
		BENT 4															
30	10D1	FOOTING	20		X			5 0.000							5 0	5 0	645
24	6D2	FOOTING	18		X			6 6.000							7 10	7 10	282
21	5D3	FOOTING	20		X			4 6.000							4 6	4 6	99
8	7H8	BEAM	7		X			4 0.000	2 11.000						9 7	9 7	157
4	10H9	BEAM	20		X			14 6.000							14 6	14 6	250
5	10H10	BEAM	17		X			30 0.000							31 1	31 1	669
2	6H11	BEAM	20		X			37 4.000							37 4	37 4	112
11	10H12	BEAM	20		X			37 4.000							37 4	37 4	1767
5	10H13	BEAM	17		X			11 7.000							12 8	12 8	273
81	3P1	COLUMN	16		X			2 9.000							9 3	9 3	282
13	4U8	BEAM	13	S	X			2 11.000	3 0.625	2 11.000	3 0.625				12 8	12 5	108
35	4U9	BEAM	13	S	X			2 11.000	2 9.000	2 11.000	2 9.000				12 1	11 10	277
4	4U10	BEAM	10	S	X				6.000	2 3.000					3 3	3 1	8
11	4U11	BEAM	10	S	X				6.000	2 11.000					3 11	3 9	28
30	10V9	COLUMN	20		X			29 7.000							29 7	29 7	3819
10	2W1	BEAM	22		X			12.000	9.125						19 9	19 9	33

STANDARD HOOKS   STIRRUP HOOKS

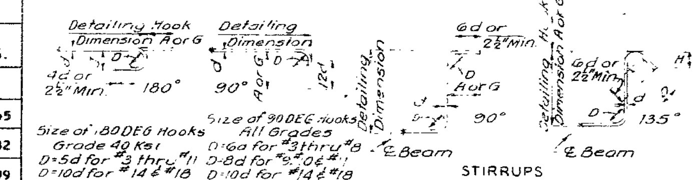

Size of 180 DEG Hooks Grade 40 Ksi
D=5d for #3 thru #11
D=10d for #14 & #18

Size of 90 DEG Hooks All Grades
D=6d for #3 thru #8
D=8d for #9, #10 & #11
D=10d for #14 & #18

END HOOK DIMENSIONS			
BAR SIZE	180° HOOKS GRADE 40		90° HOOKS ALL GRADES
	A or G	J	A or G
#3	5"	2¾"	6"
#4	6"	3½"	8"
#5	7"	4½"	10"
#6	8"	5¼"	12"
#7	9"	6¼"	14"
#8	10"	7"	16"
#9	12"	8"	19"
#10	13"	9"	22"
#11	14"	10"	2'-0"
#14	2'-2"	20½"	2'-7"
#18	2'-11"	2'-3"	3'-5"

STIRRUP HOOK DIMENSIONS GRADES 40-50-60 Ksi				
BAR SIZE	D (in.)	90° HOOK HOOK A or G	135° HOOK HOOK A or G	APPROX. H
#3	1½"	4"	4"	2½"
#4	2"	4½"	4½"	3"
#5	2½"	6"	5½"	3¾"
#6	3"	6½"	6½"	4½"

Note: Unless otherwise noted diameter D is the same for all bends and hooks on a bar.

Note: All Standard Hooks and Bends other than 180 DEG. to be bent with same procedure as for 90 DEG. Standard Hooks.

Note: Hooks and bends shall be in accordance with the procedures as shown on this sheet.

Nominal Lengths are based on out to out dimensions shown in bending diagrams and are listed for Fabricators use.

Payweights are based on Actual Lengths.

S ~ stirrup.

X ~ bar is included in substructure quantities.

Length ~ Total lengths are measured along centerline bar to the nearest inch.

V ~ bar dimensions vary in equal increments between dimensions shown on this line and the following line.

No. Ea. ~ Number of bars of each length.

* All hooks and bends for shape No. 12 (only) are based on D = 5d.

BENDING DIAGRAMS

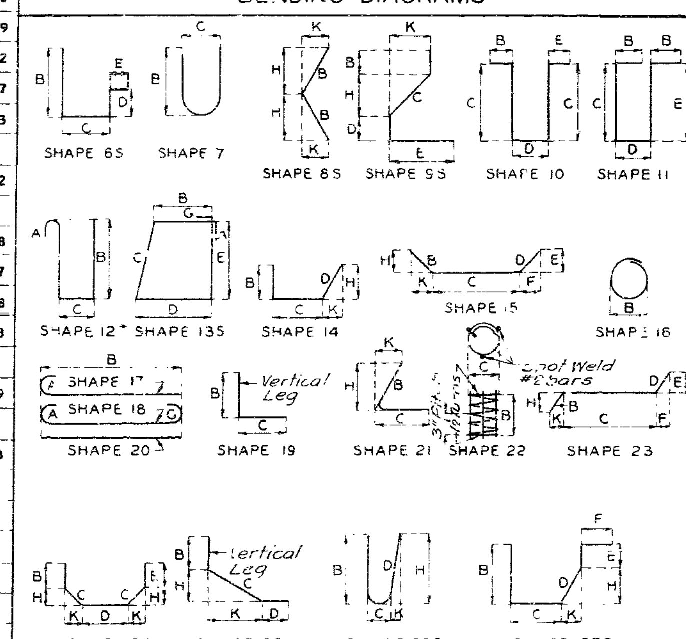

JULY 1969 | JUNE 1970

DETAILED NOV. 1970 BY CHUANG
CHECKED NOV. 1970 BY POLACEK

Note: This drawing is not to scale Follow dimensions

JACKSON COUNTY

A-2851

MISSOURI STATE HIGHWAY DEPARTMENT

FED. ROAD DIST. NO.	STATE	FED. AID PROJ. NO.	FISCAL YEAR	SHEET NO.	TOTAL SHEETS
7	MO.		19	55	

NO. REQD.	MARK NO. (SIZE MARK)	LOCATION	SHAPE NO.	STIRRUP	SUBSTR.	VARIES	NO. EA.	B (FT. IN.)	C (FT. IN.)	D (FT. IN.)	E (FT. IN.)	F (FT. IN.)	H (FT. IN.)	K (FT. IN.)	NOMINAL LENGTH (FT. IN.)	ACTUAL LENGTH (FT. IN.)	WEIGHT (LBS.)
		END BENT 5															
4	6F1	BACKWALL	15		X			11.875	5 1.750	11.875	7.500	9.250	7.500	9.250	7 2	7 1	43
2	6H1	BACKWALL	20		X			45 5.000							45 5	45 5	136
12	4H2	BACKWALL	20		X			23 3.000							23 3	23 3	186
8	9H3	BEAM	18		X			45 0.000							47 0	47 0	1278
2	6H4	BEAM	20		X			45 0.000							45 0	45 0	135
10	6H5	WING	20		X	V	2	12 7.000							12 7	12 7	
		INCR. = 23.500 IN.						4 9.000							4 9	4 9	130
2	6H6	WING	20		X			12 9.000							12 9	12 9	38
2	6T2	CURTAIN WALL	19		X			5 5.500	3 2.000						8 8	8 6	26
2	6T4	WING	25		X			13.250	9 10.125	22.250			4 6.000	8 9.000	12 10	12 9	38
45	5U1	BEAM	13	S	X			2 9.000	2 10.000	3 5.000	2 9.000				12 9	12 5	503
11	4U2	BEAM	10	S	X				6.000	2 9.000					3 9	3 7	26
3	4U3	CURTAIN WALL	10		X				2 8.750	6.000					6 0	5 9	12
5	7U4	BEAM	11		X				4 10.000	2 9.000	4 3.000				11 10	11 6	118
84	5V1	BACKWALL	20		X			7 0.000							7 0	7 0	615
18	4V2	WING	20		X	V	2	5 5.000							5 5	5 5	
		INCR. = 5.750 IN.						19.000							19	19	42
8	5V3	WING	19		X			6 7.000	6.000						7 1	7 0	58
2	6V4	BEAM	20		X			2 9.000							2 9	2 9	8
2	4V5	CURTAIN WALL	20		X			5 0.000							5 0	5 0	7
6	5V7	BACKWALL	20		X			7 7.000							7 7	7 7	47
10	2W1	BEAM	22		X			12.000	9.125						19 9	19 9	33

NO. REQD.	MARK NO. (SIZE MARK)	LOCATION	SHAPE NO.	STIRRUP	SUBSTR.	VARIES	NO. EA.	B (FT. IN.)	C (FT. IN.)	D (FT. IN.)	E (FT. IN.)	F (FT. IN.)	H (FT. IN.)	K (FT. IN.)	NOMINAL LENGTH (FT. IN.)	ACTUAL LENGTH (FT. IN.)	WEIGHT (LBS.)
		SUPERSTRUCTURE															
606	5C1	CURB	10					6.000	12.750	13.500					3 9	3 5	2145
4	5C3	CURB	20					53 11.500							54 0	54 0	225
8	5C4	CURB	20					41 0.000							41 0	41 0	342
8	5C5	CURB	20					45 7.125							45 7	45 7	380
8	5C6	CURB	20					35 3.875							35 4	35 4	295
304	5C7	PARAPET	6	S				2 8.000	8.500	2 0.375	6.500				5 11	5 8	1797
14	5C8	END POST	10						2 7.000	8.500					5 11	5 8	83
4	6C9	END POST	20					12 9.000							12 9	12 9	77
4	5R1	END POST	20					5 9.000							5 9	5 9	24
2	5R2	END POST	10						3 5.000	8.500					7 7	7 4	15
2	5R3	END POST	10						3 8.000	8.500					8 1	7 10	16
2	5R4	END POST	10						3 10.500	8.500					8 6	8 3	17
2	5R5	END POST	10						3 11.500	8.500					8 8	8 5	18
2	5R6	END POST	10						4 0.500	8.500					8 10	8 7	18
2	5R7	END POST	10						4 1.500	8.500					9 0	8 9	18
2	5R8	END POST	10						4 2.750	8.500					9 2	8 11	19
72	5R9	PARAPET	20					9 8.750							9 9	9 9	732
12	5R10	END POST	10						5 9.000	7.250					12 1	11 10	148
574	5R11	PARAPET	12					2 0.375	8.500						5 4	5 2	3093
8	5R12	PARAPET	20					40 2.375							40 2	40 2	335
24	5R13	PARAPET	20					31 0.000							31 0	31 0	776
24	5R14	PARAPET	20					35 7.125							35 7	35 7	891
8	5R15	PARAPET	20					55 9.125							55 9	55 9	465
4	6R16	PARAPET	20					44 3.375							44 3	44 3	266
4	5R17	PARAPET	20					59 1.875							59 2	59 2	247
8	5R18	PARAPET	20					7 7.000							7 7	7 7	63
2	5R19	END POST	10						4 3.750	8.500					9 4	9 1	19
2	5R20	END POST	10						4 4.375	8.500					9 5	9 2	19
4	5R21	END POST	10						4 4.625	8.500					9 6	9 3	39
36	5R22	END POST	12					2 0.375	10.000						5 6	5 3	197
5	5R23	PARAPET	10						19.500	8.500					4 0	3 9	20
16	6R24	END POST	10						4 9.000	7.750					10 2	9 10	236
1142	6S1	SLAB	20					43 10.500							43 11	43 11	75329
276	6S6	SLAB	20					50 6.000							50 6	50 6	20935
352	4S7	SLAB	20					37 9.000							37 9	37 9	8876
30	5S8	SLAB	20					50 3.000							50 3	50 3	1572
43	4S9	SLAB	20					16 0.000							16 0	16 0	460
295	5S10	SLAB	10					2.000	12.000	4 2.000	6.000				6 10	6 5	1974
24	4S11	SLAB	20					37 9.000							37 9	37 9	605
72	6S12	SLAB	20			V	4	42 6.875							42 7	42 7	
		INCR. = 27.250 IN.						3 11.750							4 0	4 0	2519
86	4S13	SLAB	20					24 0.000							24 0	24 0	1379
		END OF BAR LIST															

STANDARD HOOKS

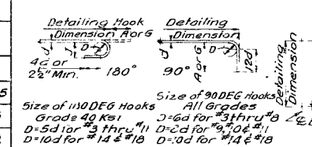

Size of 180 DEG Hooks All Grades
Grade 40 Ksi
D=5d for #3 thru #11
D=10d for #14 & #18

Size of 90 DEG Hooks All Grades
D=6d for #3 thru #8
D=8d for #9 & #11
D=12d for #14 & #18

STIRRUP HOOKS

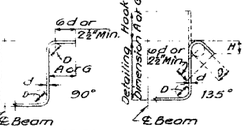

STIRRUPS

BAR SIZE	180° HOOKS GRADE 40 A or G	180° HOOKS GRADE 40 J	90° HOOKS ALL GRADES A or G
#3	5"	2¾"	6"
#4	6"	3½"	8"
#5	7"	4½"	10"
#6	8"	5½"	12"
#7	9"	6½"	14"
#8	10"	7"	16"
#9	12"	8"	19"
#10	13"	9"	22"
#11	14"	10"	2'-0"
#14	2'-2"	20½"	2'-7"
#18	2'-11"	2'-3"	3'-5"

END HOOK DIMENSIONS

BAR SIZE	D (IN.)	90° HOOK HOOK A or G	135° HOOK HOOK A or G	135° HOOK APPROX. H
#3	1½"	4"	4"	2½"
#4	2"	4½"	4½"	3"
#5	2½"	6"	5½"	3¾"
#6	3"	6½"	6½"	4½"

STIRRUP HOOK DIMENSIONS
GRADES 40-50-60 Ksi

Note: Unless otherwise noted diameter D is the same for all bends and hooks on a bar.

Note: All Standard Hooks and Bends other than 180 DEG. to be bent with same procedure as for 90 DEG. Standard Hooks.

Note: Hooks and bends shall be in accordance with the procedures as shown on this sheet.
Nominal Lengths are based on out to out dimensions shown in bending diagrams and are listed for Fabricators use.
Payweights are based on Actual Lengths.

S~ stirrup.
X~ bar is included in substructure quantities.
Length ~ Total lengths are measured along centerline bar to the nearest inch.
V~ bar dimensions vary in equal increments between dimensions shown on this line and the following line.
No. Ea. ~ Number of bars of each length.

* All hooks and bends for shape No. 12 (only) are based on D=5d.

BENDING DIAGRAMS

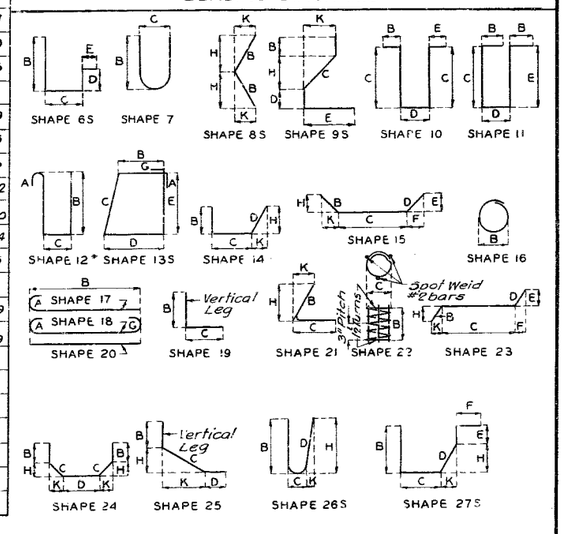

DETAILED NOV. 1970 BY CHUANG
CHECKED NOV. 1970 BY POLACEK

Note: This drawing is not to scale. Follow dimensions.

Sheet No. 4 of 16.

JACKSON COUNTY

A-2851

JULY 1969 | JUNE 1970

4-71

MISSOURI STATE HIGHWAY DEPARTMENT

FED. ROAD DIST. NO.	STATE	FED. AID PROJ. NO.	FISCAL YEAR	SHEET NO.	TOTAL SHEETS
5	MO.		19	56	

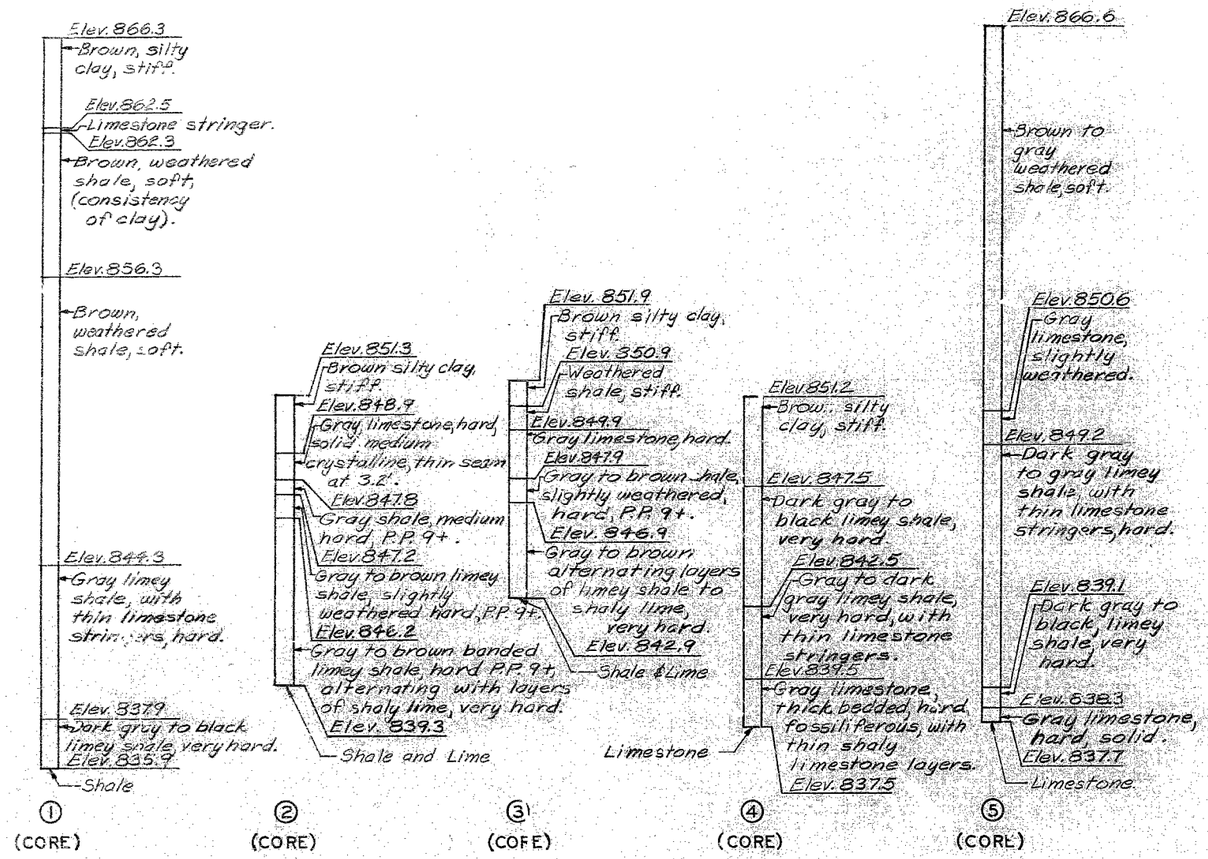

Note: For Location of borings see Sheet No. 1 of 16.

BORING DATA

442

DETAILED JUNE 1970 BY POLACEK
CHECKED OCT. 1970 BY CHUANG

Note: This drawing is not to scale. Follow dimensions.

Sheet No. 5 of 16

JACKSON COUNTY

A-2851

MISSOURI STATE HIGHWAY DEPARTMENT

FED. ROAD DIST. NO.	STATE	FED. AID PROJ. NO.	FISCAL YEAR	SHEET NO.	TOTAL SHEETS
5	MO.		19	57	

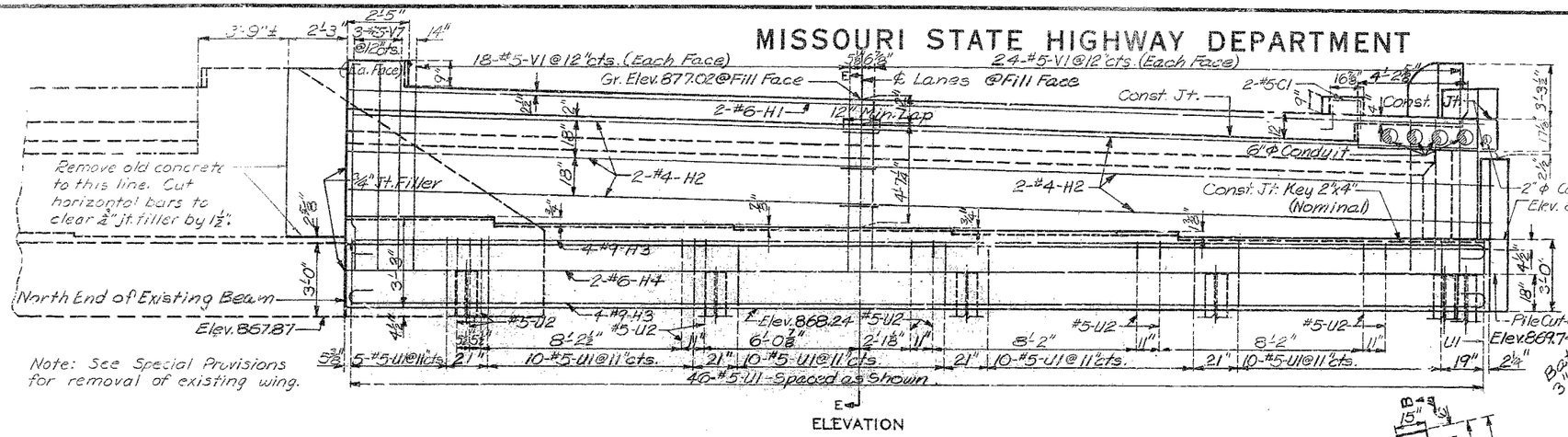

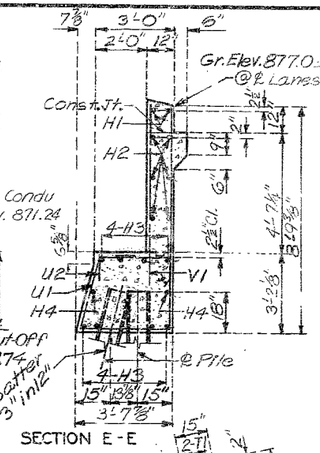

Note: Field bending shall be required at wings for #6-H bars in backwalls with Expansion Device and for F bars when necessary to conform to slope of wing.

See bridge rail sheet for reinforcement of end posts, parapets and curbs.

Butt splice (if required) Top of lower section to be cut square

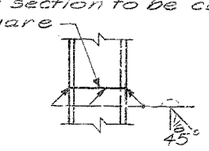

STEEL PILE SPLICE

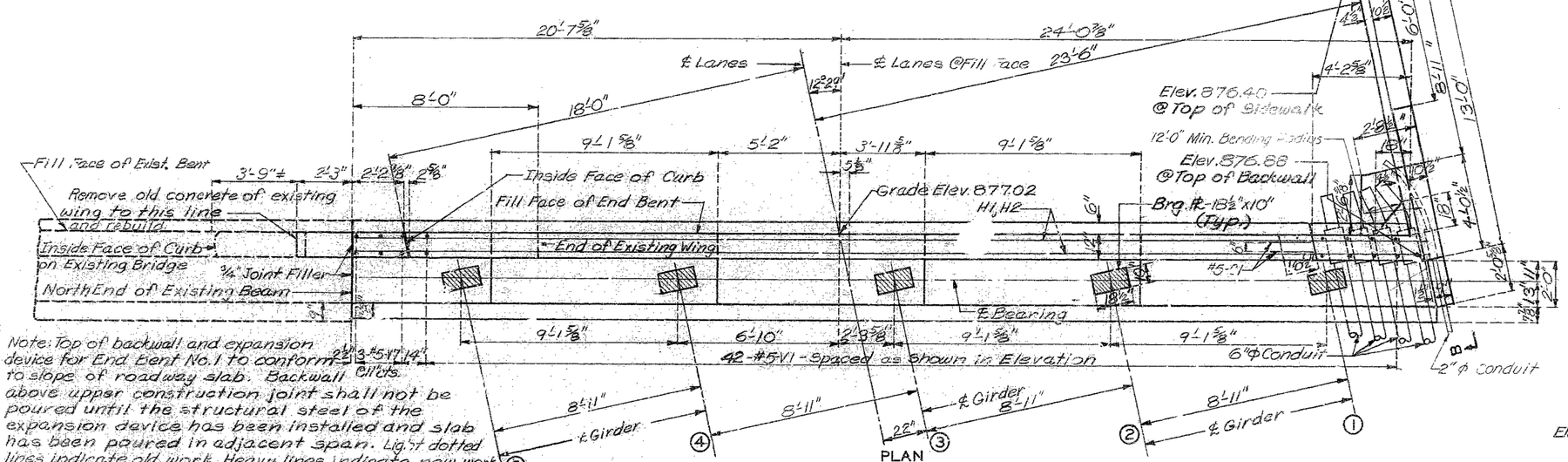

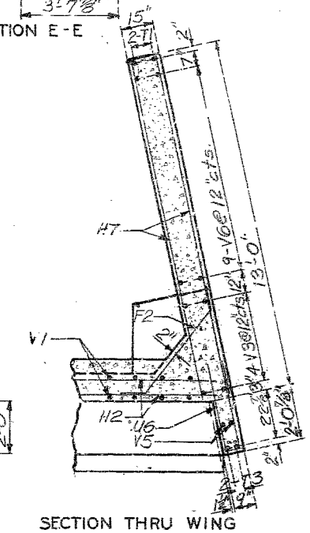

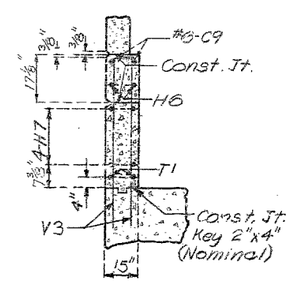

Note: Top of backwall and expansion device for End Bent No. 1 to conform to slope of roadway slab. Backwall above upper construction joint shall not be poured until the structural steel of the expansion device has been installed and slab has been poured in adjacent span. Light dotted lines indicate old work. Heavy lines indicate new work. Bars bonded in old concrete not removed shall be cleanly stripped and bent into new concrete except as noted.

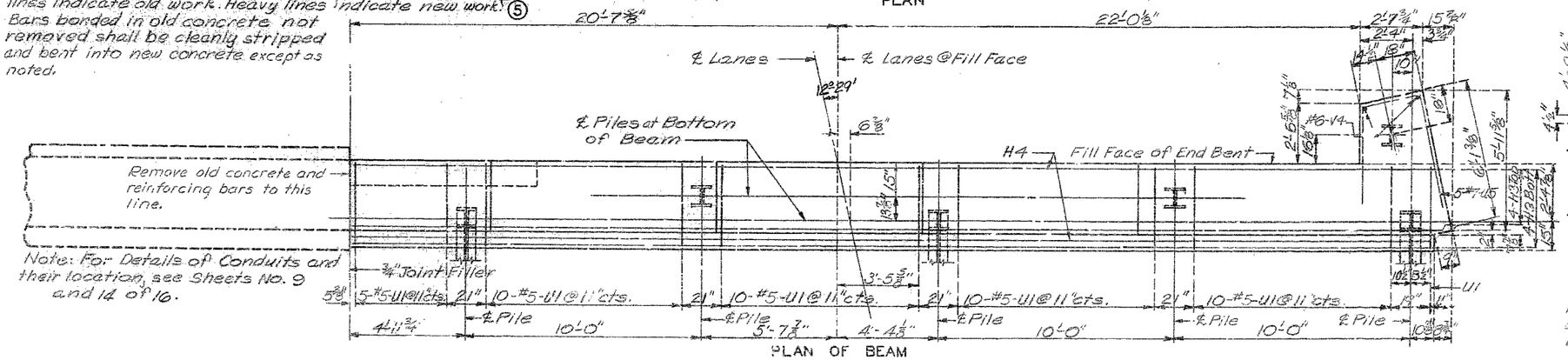

Note: For Details of Conduits and their location, see Sheets No. 9 and 14 of 16.

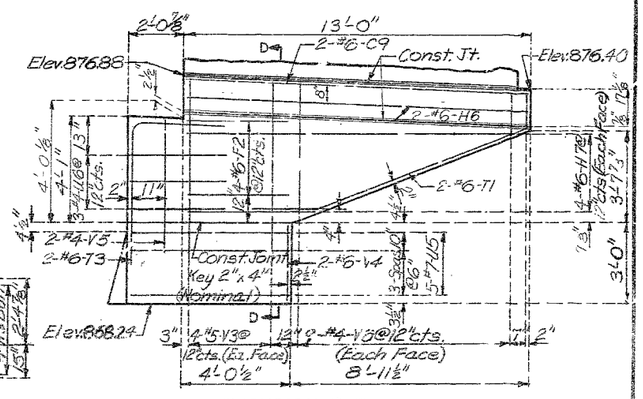

Note: All reinforcing bars in tops of substructure beams or caps shall be spaced to clear anchor bolts in bearings by at least ½".

Adjust reinforcing bars where necessary to avoid interference with conduit.

DETAILED JULY 1970 BY POLACEK
CHECKED OCT. 1970 BY CHUANG

DETAILS OF END BENT NO. 1

Note: This drawing is not to scale. Follow dimensions.

Sheet No. 6 of 16.

JACKSON COUNTY

A-2851

443

MISSOURI STATE HIGHWAY DEPARTMENT

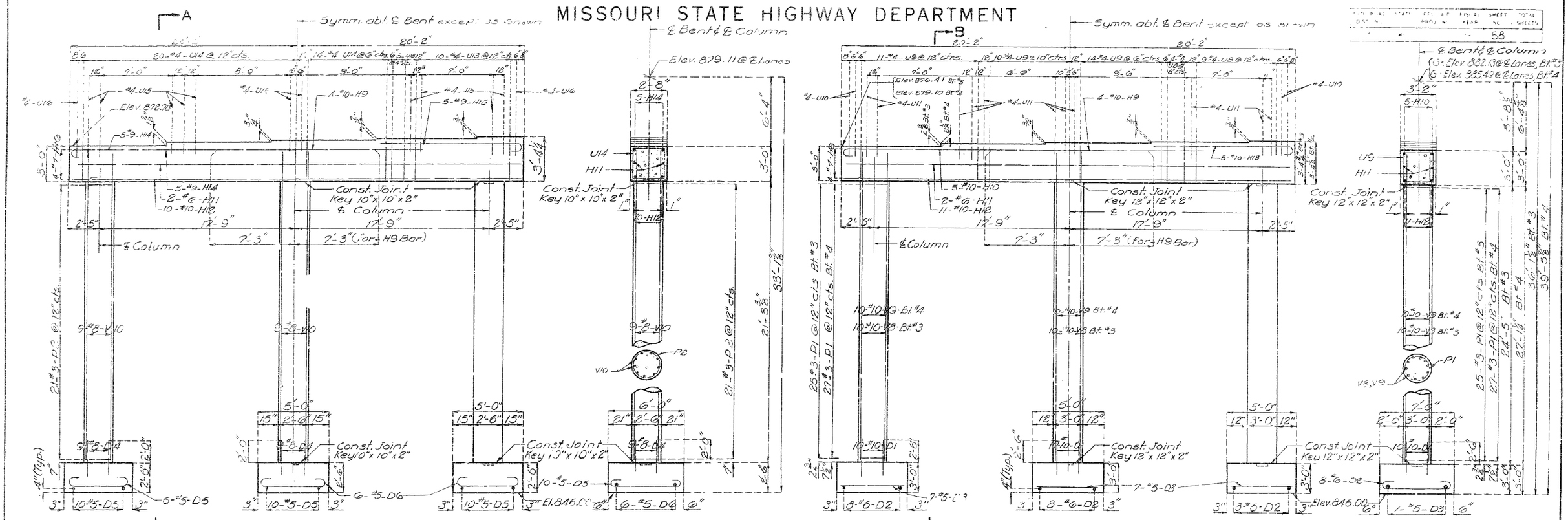

Note: All reinforcing bars in tops of substructure beams or caps shall be spaced to clear anchor bolts for bearings by at least ½".

NO. 19.6	REVISED
SEPT. 1962	APRIL 1969

DETAILED JULY 1970 BY MOI AI
CHECKED NOV. 1970 BY RAITHEL

Note: This drawing is not to scale. Follow dimensions

Sheet No. 7 of 8.

JACKSON COUNTY

A-2851

MISSOURI STATE HIGHWAY DEPARTMENT

FED. ROAD DIST. NO.	STATE	FED. AID PROJ. NO.	FISCAL YEAR	SHEET NO.	TOTAL SHEETS
5	MO.		19	59	

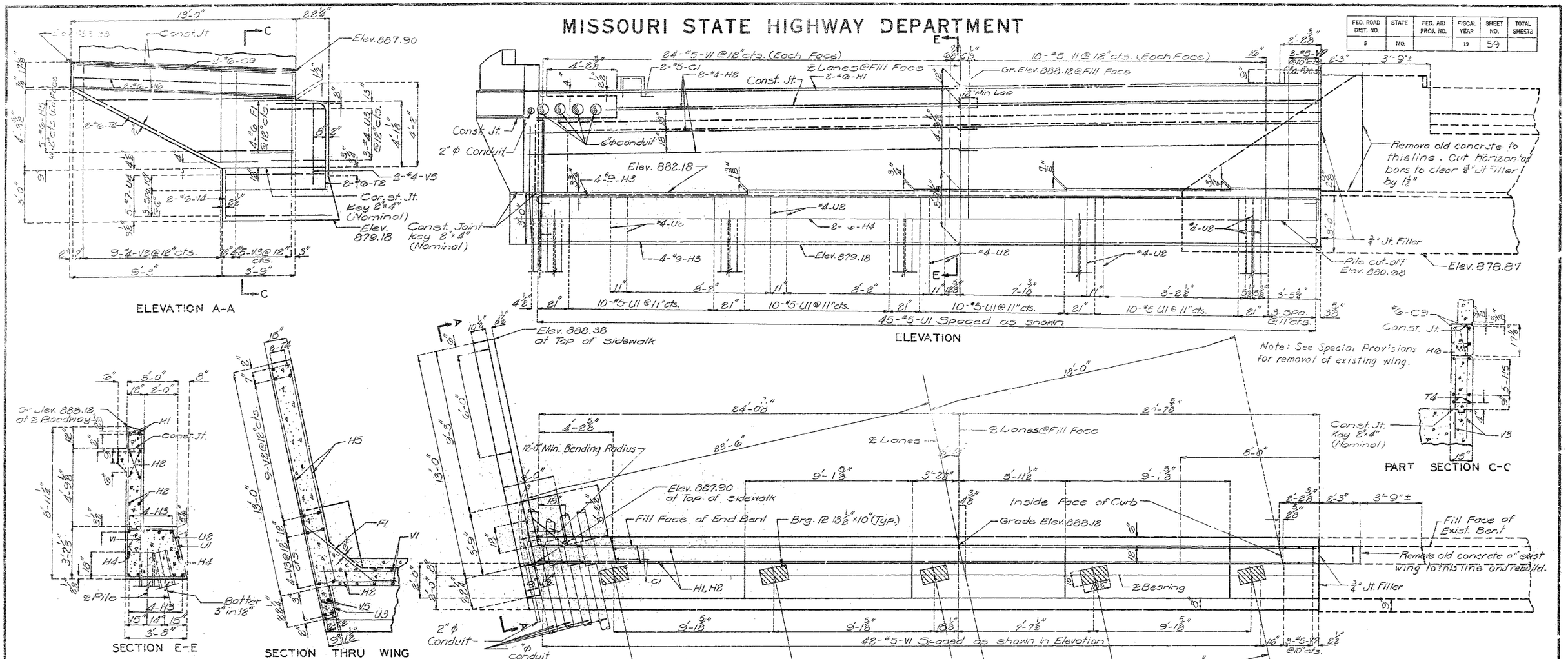

Note: Top of backwall and expansion device for end bent No. 5 to conform to slope of roadway slab.

Backwall above upper construction joints shall not be poured until the structural steel of the expansion device has been installed and slab has been poured in adjacent span.

Field bending shall be required at wings for #6-H bars in backwalls with Expansion Device and for F bars when necessary to conform to slope of wing.

See bridge rail sheet for reinforcement of end posts, parapets and curbs.

Note: Light dotted lines indicate old work. Heavy lines indicate new work. Bars bonded in old concrete not removed shall be cleanly stripped and bent [illegible] are passed, except as noted.

Note: For Details of Conduits and their location see sheet No. 9, and 14 of 16.

Note: Adjust reinforcing bars where necessary to avoid interference with conduit.

All reinforcing bars in tops of substructure beams or caps shall be spaced to clear anchor bolts for bearings by at least ¼".

DETAILED OCT. 1970 BY MOLAI

CHECKED OCT. 1970 BY CHUANG

Note: This drawing is not to scale. Follow dimensions.

Sheet No. 8 of 16

JACKSON COUNTY

A-28.51

445

MISSOURI STATE HIGHWAY DEPARTMENT

FED. ROAD DIST. No.	STATE	FED. AID PRO. NO.	FISCAL YEAR	SHEET NO.	TOTAL SHEETS
5	MO.		19	60	

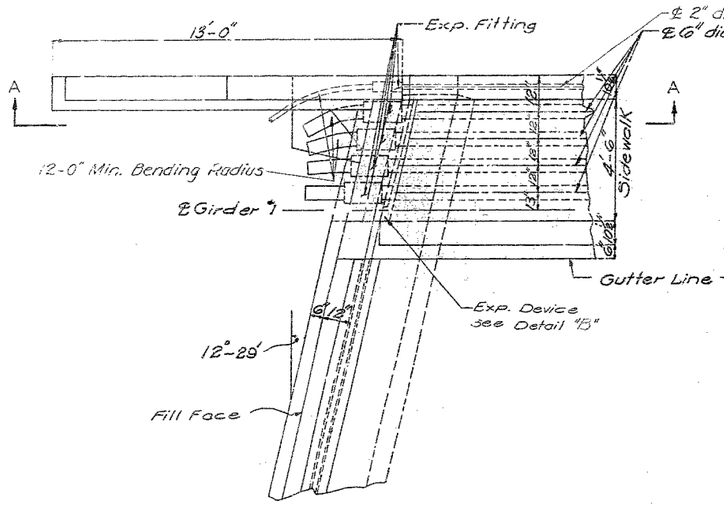

CONDUIT PLAN VIEW OF BENT NO. 1

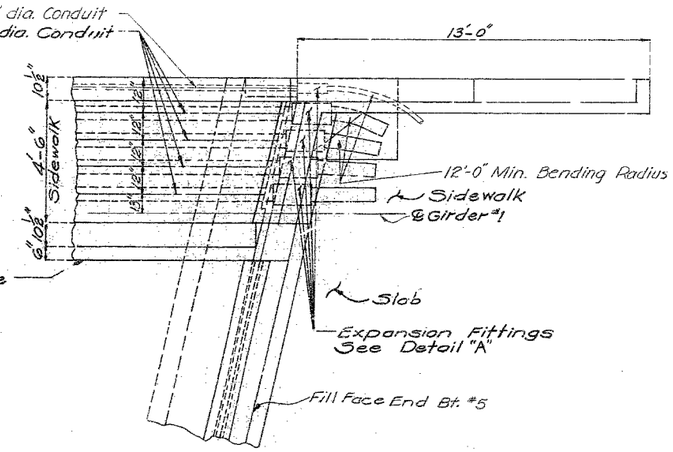

CONDUIT PLAN VIEW OF BENT NO. 5

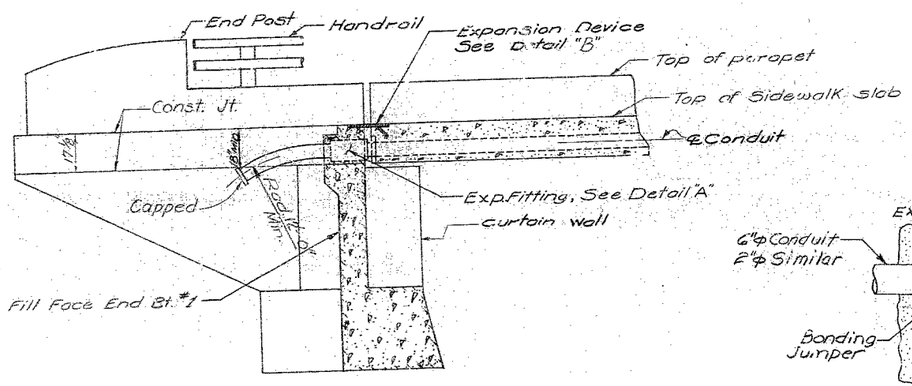

SECTION A–A

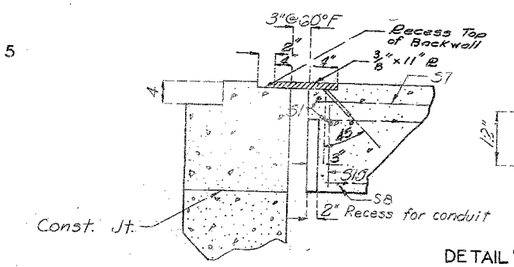

SECTION C-C

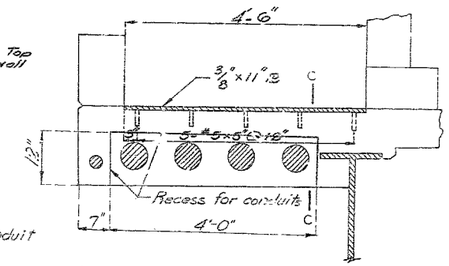

DETAIL "B"

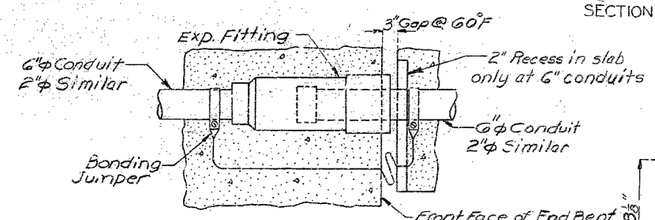

CONDUIT EXPANSION FITTING
DETAIL A

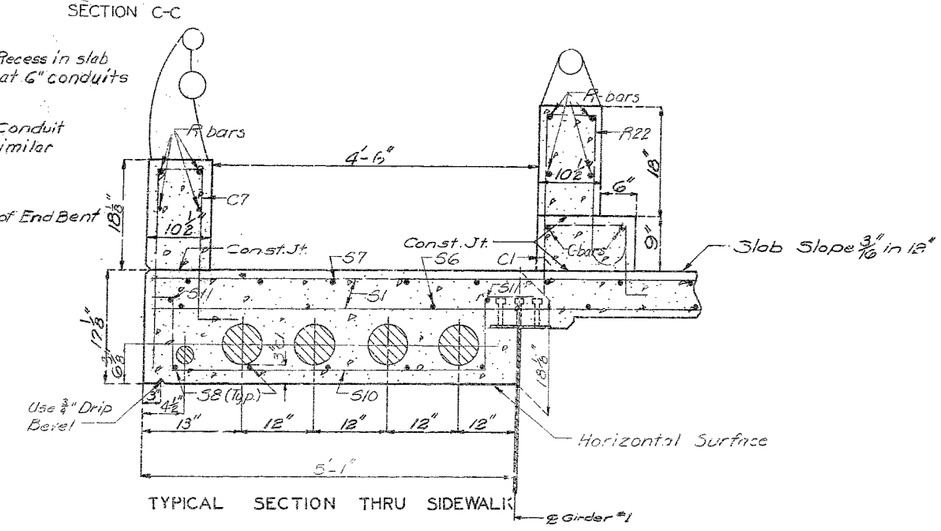

TYPICAL SECTION THRU SIDEWALK

Note: Cost of furnishing and placing 4-6" φ and 1-2" φ conduit, expansion fittings and all other material and work required shall be included in contract price bid for Conduit System on Structure (Kansas City Power and Light) Lump Sum. See Special Provisions.

All conduit shall be rigid galvanized steel with 3" minimum cover in concrete.

Expansion Fittings shall be equal to O. Z. Elec. Mfg. Co. Expansion Fitting "EX," with approved bonding jumper.

Shift reinforcing steel in field where necessary to clear conduit.

CONDUIT SYSTEM ON STRUCTURE

446

DETAILED JULY 1970 BY MOLAI
CHECKED OCT. 1970 BY CHUANG

Note: This drawing is not to scale. Follow dimensions.

Sheet No. 9 of 16

JACKSON COUNTY

A-2851

Note: Longitudinal dimensions shown are taken parallel to grade at top of slab at ℄ Lanes.

MISSOURI STATE HIGHWAY DEPARTMENT

FED. ROAD DIST. NO.	STATE	FED. AID PROJ. NO.	FISCAL YEAR	SHEET NO.	TOTAL SHEETS
5	MO.		19	61	

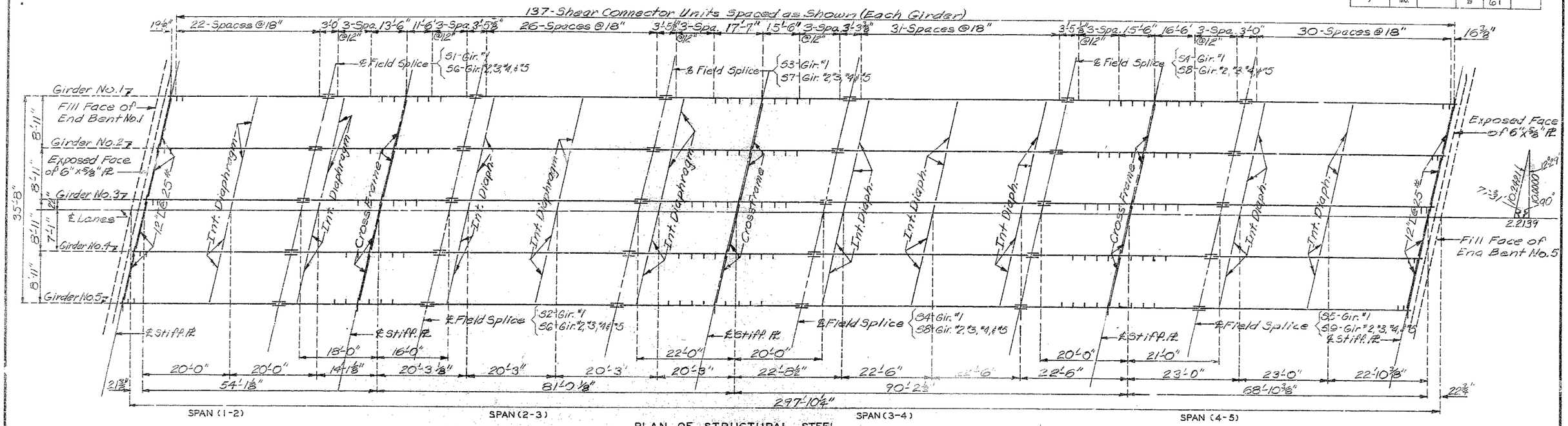

PLAN OF STRUCTURAL STEEL

Note: For spacing of web stiffeners, see Elevation of Girders on Sheet No. 11, and 12 of 16.

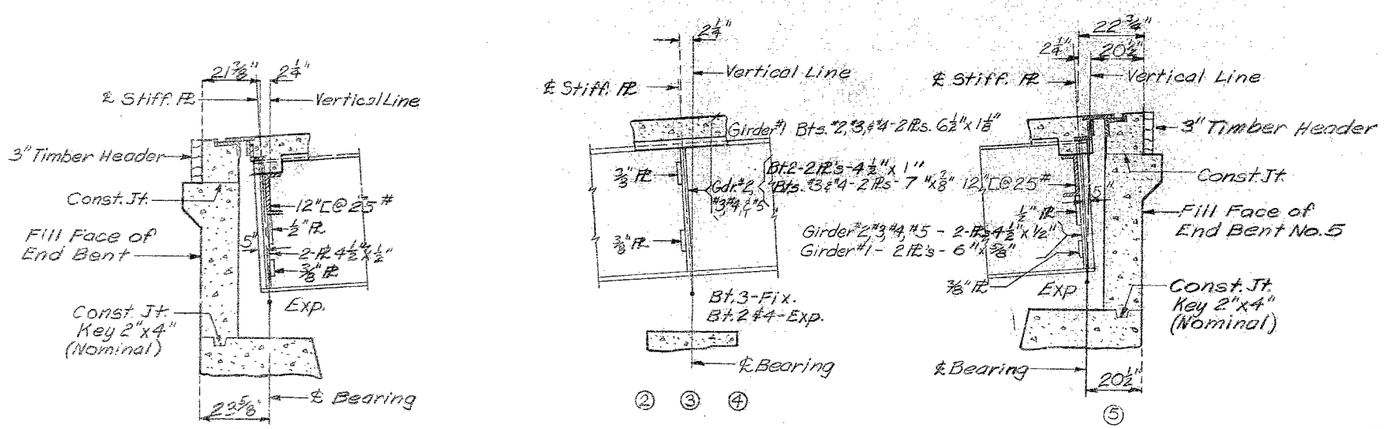

PART LONGITUDINAL SECTION

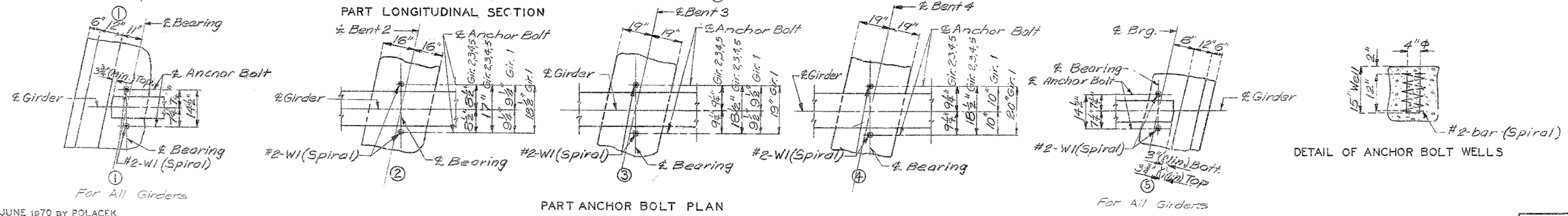

PART ANCHOR BOLT PLAN

DETAILED JUNE 1970 BY POLACEK
CHECKED OCT. 1970 BY CHUANG

Note: This drawing is not to scale. Follow dimensions.

Sheet No. 10 of 16

JACKSON COUNTY

A-2851

447

MISSOURI STATE HIGHWAY DEPARTMENT

FED ROAD DIST. NO.	STATE	FED AID PROJ NO.	FISCAL YEAR	SHEET NO.	TOTAL SHEETS
5	MO.		19	62	

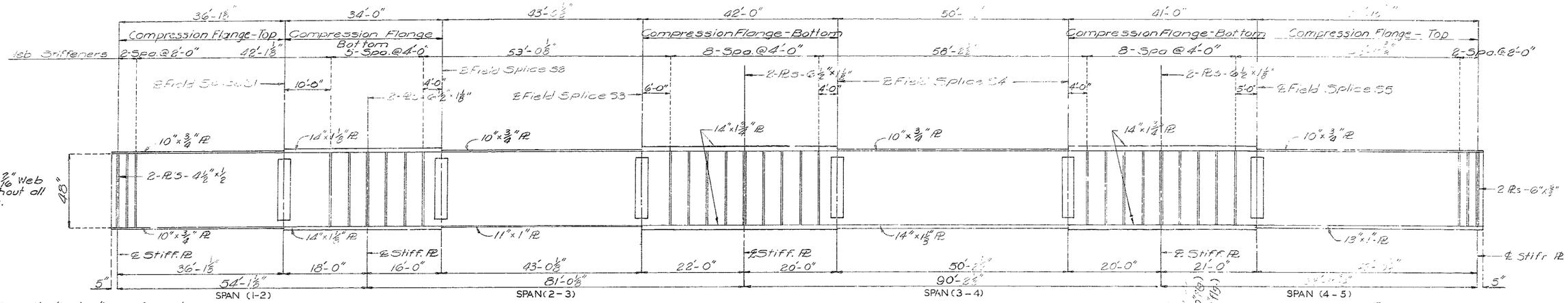

ELEVATION OF GIRDER NO. 1

Note: Longitudinal dimension shown are taken parallel to grade of ℄ Lanes
Transverse web stiffeners shall be placed on the inside face of exterior girders and in successive alignment along either side of interior girders.
For location of intermediate diaphragms See sheet No. 10 of 16.

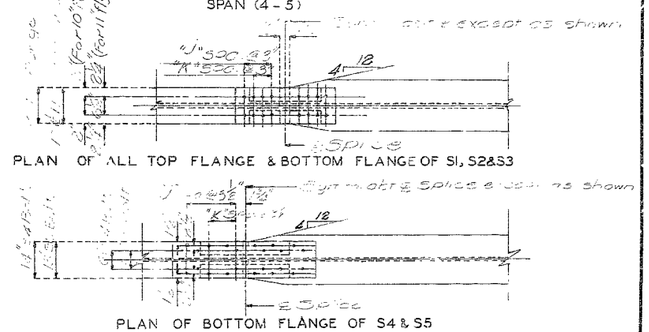

PLAN OF ALL TOP FLANGE & BOTTOM FLANGE OF S1, S2&S3

PLAN OF BOTTOM FLANGE OF S4 & S5

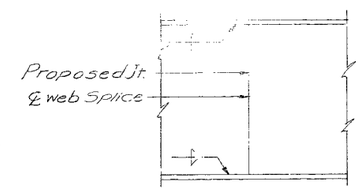

SHOP WEB SPLICE

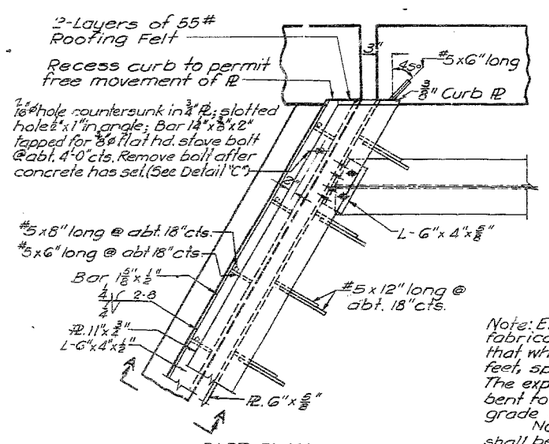

PART PLAN

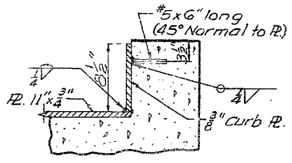

SECTION THRU CURB

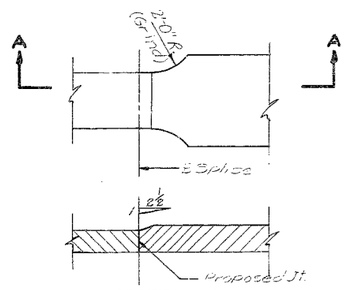

SECTION A-A

SHOP FLANGE SPLICE

Note: Shop welded web splice may be fabricated by the contractor when detailed on the shop drawings and approved by the engineer. No additional payment will be made for optional shop welded web splices.

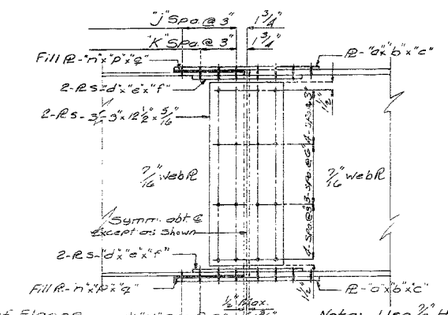

* See Plan of Flange

* "K" Spa. @ 3"
* "J" Spa. @ 3"

Note: Use 7/8" High Strength Bolts with 15/16" reamed holes.

Note: Expansion Device shall be fabricated in one section except that when the length is over 50 feet, splicing is permissible. The expansion device shall be bent to conform to slope and grade of roadway.
No. 5 bars for expansion device shall be structural grade. Approved stud welded anchors or deformed bar anchors (ASTM A496) may be used in lieu of #5 bars shown.
Use 2 Layers of 55# Roofing Felt between the sliding contact surface of curb plate and concrete curb.

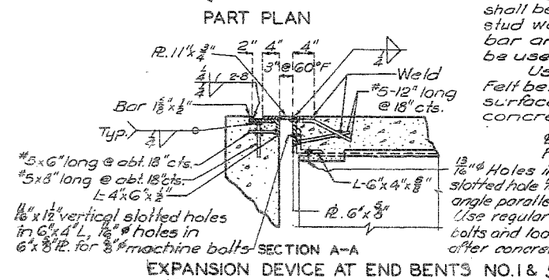

EXPANSION DEVICE AT END BENTS NO. 1 & 5
(Expansion Device for Sidewalk See Sht. 9 of 16)

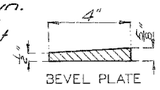

℄ 7/16" ϕ hole for 5/8" ϕ flat hd. (slotted) stove bolt
13/16" ϕ Holes in flange; slotted hole 13/16"x1 1/2" in angle parallel to roadway. Use regular 5/8" ϕ machine bolts and loosen nuts after concrete has set.

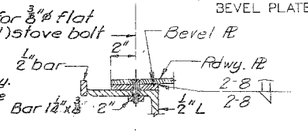

DETAIL "C"

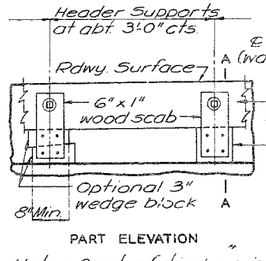

PART ELEVATION

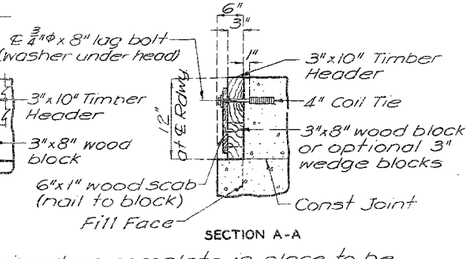

SECTION A-A

Note: Cost of timber headers complete in place to be included in price bid for concrete.

DETAILS OF TIMBER HEADER AT END BENTS

SPLICE LOCATION	TABLE OF DIMENSIONS					FIELD SPLICE				
	a	b	c	d	e	f	J	K	n	p	q
S1 Top & S1 Bot.	2"	3/8"	2'-0"	4"	1/2"	2'-0 1/2"	3	3	10"	5/8"	12"
S2, S4 & S5 Top		3/8"	2'-3"	4"	1/2"	2'-0 1/2"	4	3	10"	1"	5"
S2, S4 & S5 Bot.											
S3 Top	2"	5/8"	3'-3"	4 1/2"	5/8"	3'-0"	6	5	11"	3/4"	2"
S3 Bot.	1"	3/4"	5'-3"	6"	5/8"	4'-7 1/2"	9	7	11"	7/8"	2"-10 1/2"
S3 Mid.	1"	3/4"	4'-4"	5 1/2"	5/8"	4'-0 1/2"	7	6	11"	7/8"	2" 2 1/2"

DETAILS OF BOLTED FIELD SPLICE OF GIRDER NO. 1

448

DETAILED JUNE 1970 BY MOLAI
CHECKED OCT. 1970 BY CHUANG

Note: This drawing is not to scale. Follow dimensions.

Sheet No. 11 of 16.

JACKSON COUNTY

A-2851

MISSOURI STATE HIGHWAY DEPARTMENT

FED ROAD DIST NO	STATE	FED AID PROJ NO	FISCAL YEAR	SHEET NO.	TOTAL SHEETS
5	MO		19	63	

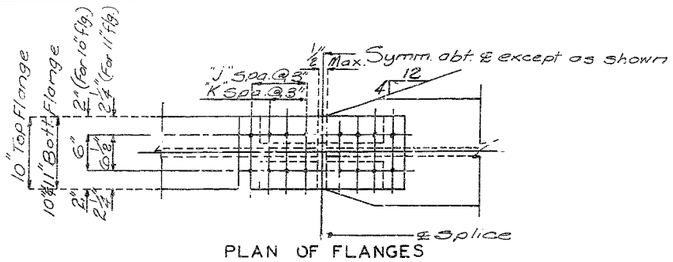

PLAN OF FLANGES

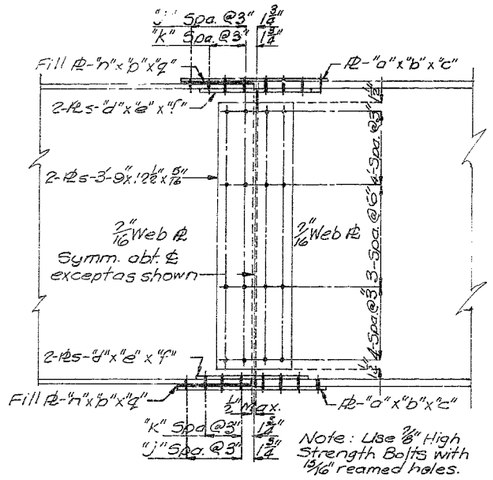

SPLICE LOCATION	TABLE OF DIMENSIONS FIELD SPLICE										
	a	b	c	d	e	f	j	k	n	p	q
S6 Top & Bott	10"	3/8"	2'-0 1/2"	4"	1/2"	2'-0 1/2"	3	3	10"	1/4"	18"
S7 S8 S9 Top & S7 Bott.	10"	3/8"	2'-0 1/2"	4"	1/2"	2'-0 1/2"	3	3	10"	3/8"	18"
S8 Bottom	11"	5/8"	3'-0 1/2"	4 1/2"	5/8"	3'-0 1/2"	5	5	11"	1/8"	18"
S9 Bottom	10"	5/8"	3'-0 1/2"	4 1/2"	5/8"	3'-0 1/2"	5	5	10"	1/8"	18"

DETAIL OF BOLTED FIELD SPLICE OF GIRDERS NO. 2, 3, 4 & 5

NOTES: TYPE "D" BEARINGS

Lead plates under bearings shall be approximately 1/8" thickness and weigh 8#/sq. ft. Cost of lead plates shall be included in price bid for other items.

"Estimated weight" does not include weight of anchor bolts.

Anchor Bolts for Type "D" Bearings shall be 1 1/2"ø swedged bolts and shall extend 12" into concrete, with hexagon nuts and plain washers for Fixed Bearings, no nuts for Expansion Bearings.

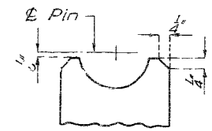

END VIEW OF WEB, EXPANSION BEARING

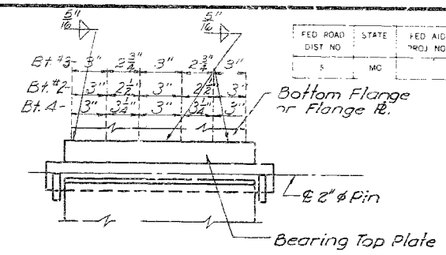

WELDING DETAILS

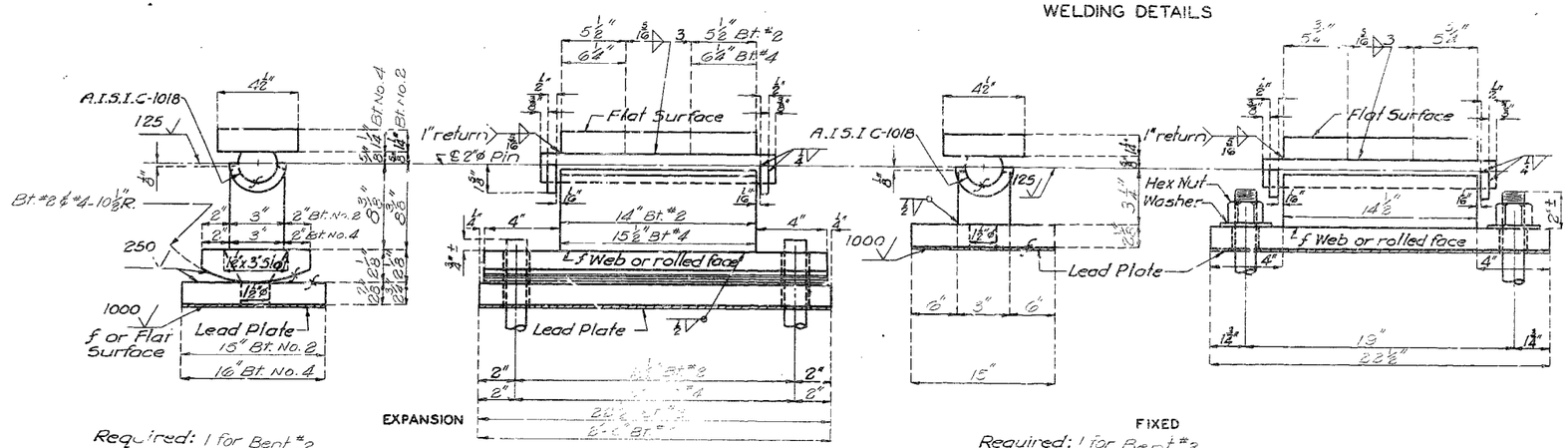

TYPE "D" BEARINGS BTS. 2, 3 & 4 GIRDER NO. 1
(Estimated Weight 1274#)

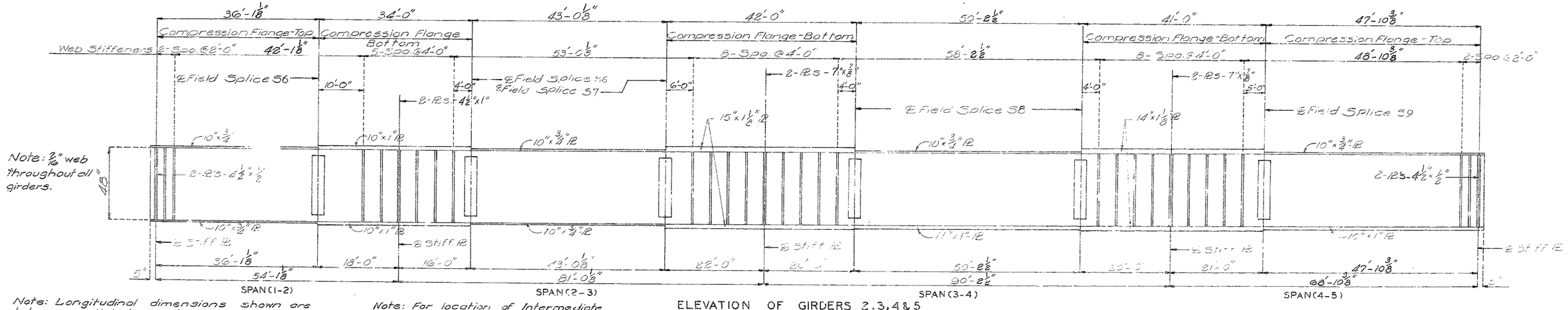

ELEVATION OF GIRDERS 2, 3, 4 & 5

Note: Longitudinal dimensions shown are taken parallel to grade at ℄ Lanes

Transverse web stiffeners shall be placed on the inside face of exterior girders and in successive alignment along either side of interior girders.

Note: For location of Intermediate Diaphragms see sheet No. 10 of 16.

DETAILED SEP. 1970 BY MOLAI
CHECKED OCT. 1970 BY CHUANG

Note: This drawing is not to scale. Follow dimensions.

Sheet No. 12 of 16

JACKSON COUNTY

A-2851

SPS
REVISED
STD

449

MISSOURI STATE HIGHWAY DEPARTMENT

FED. ROAD DIST. NO.	STATE	FED. AID PROJ. NO.	FISCAL YEAR	SHEET NO.	TOTAL SHEETS
5	MO.		19	64	

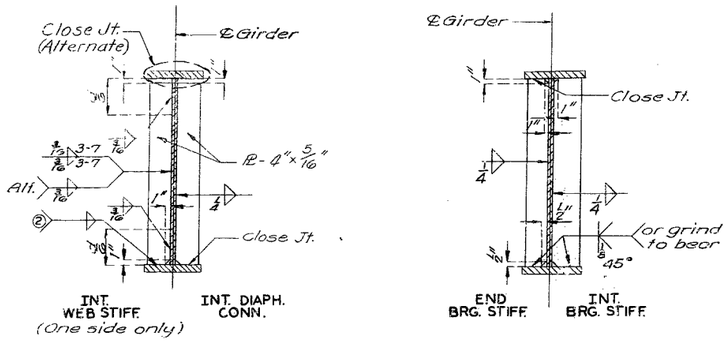

② Weld to compression flange as located on Elevation of Girder. Weld may be omitted on interior girders when Int. Diaph. Conn. PL is required on both sides.

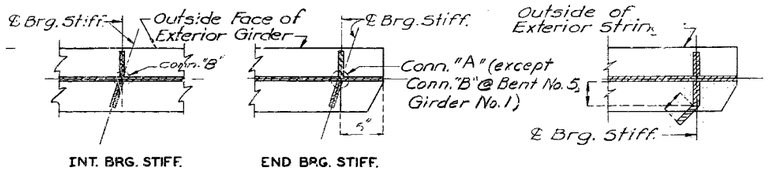

TYPICAL LOCATION DETAILS

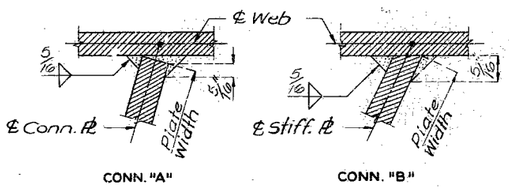

WELDING DETAILS

NOTES: TYPE "D" BEARINGS

Lead plates under bearings shall be approximately 1/8" thickness and weigh 8#/sq. ft. Cost of lead plates shall be included in price bid for other items. "Estimated weight" does not include weight of anchor bolts.

Anchor Bolts for Type "D" Bearings shall be 1 1/4"ø swedged bolts and shall extend 12" into concrete, with hexagon nuts and plain washers for Fixed Bearings, no nuts for Expansion Bearings.

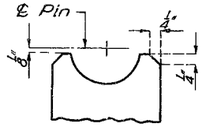

END VIEW OF WEB EXPANSION BEARING

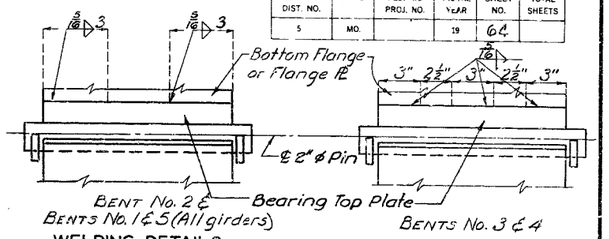

WELDING DETAILS

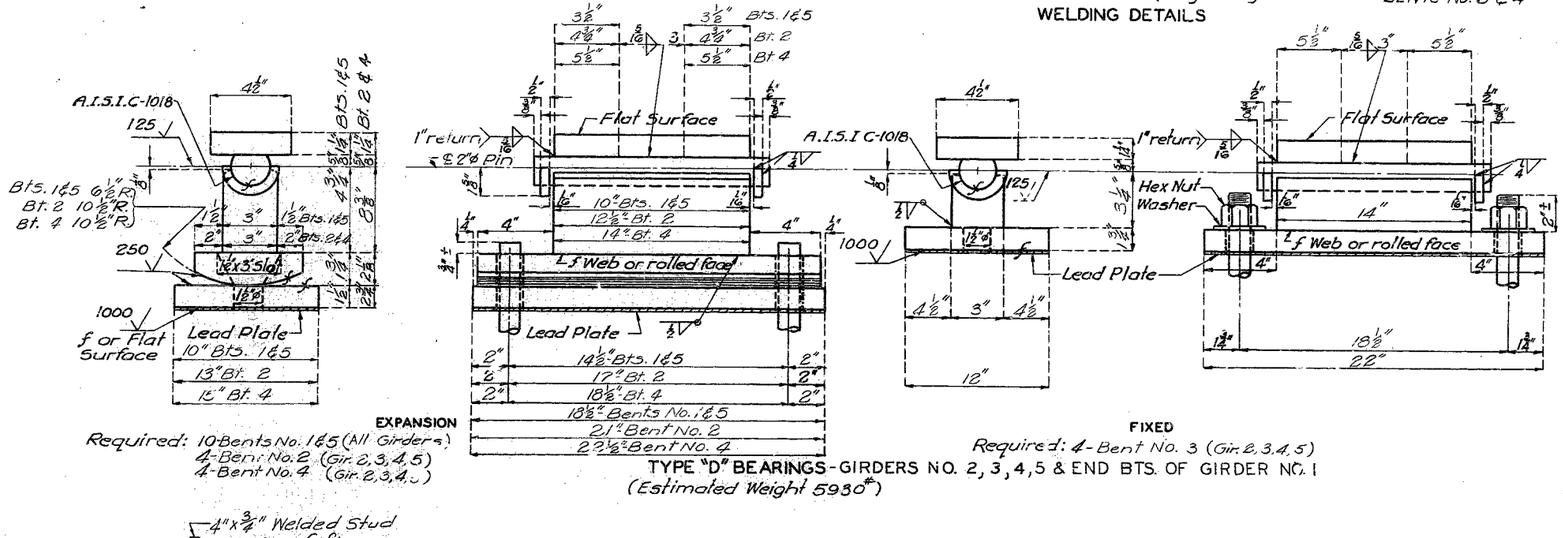

EXPANSION

Required: 10-Bents No. 1 & 5 (All Girders)
4-Bent No. 2 (Gir. 2, 3, 4, 5)
4-Bent No. 4 (Gir. 2, 3, 4, 5)

FIXED

Required: 4-Bent No. 3 (Gir. 2, 3, 4, 5)

TYPE "D" BEARINGS - GIRDERS NO. 2, 3, 4, 5 & END BTS. OF GIRDER NO. 1
(Estimated Weight 5930#)

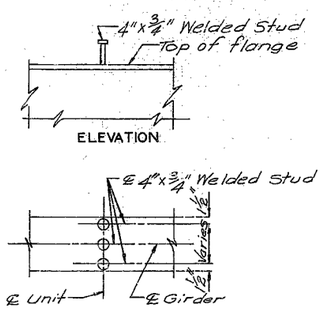

PLAN OF STUD CONN.

DETAILS OF SHEAR CONNECTORS

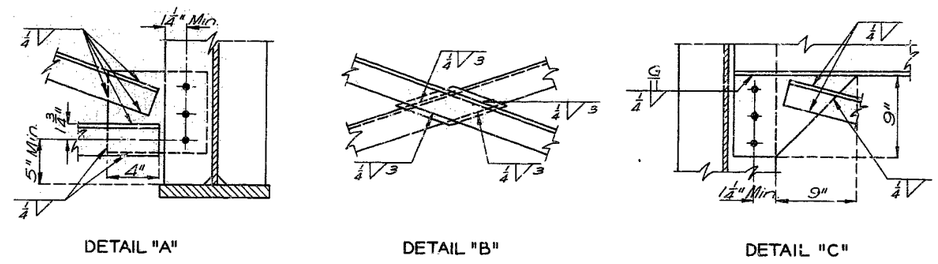

DETAIL "A" DETAIL "B" DETAIL "C"

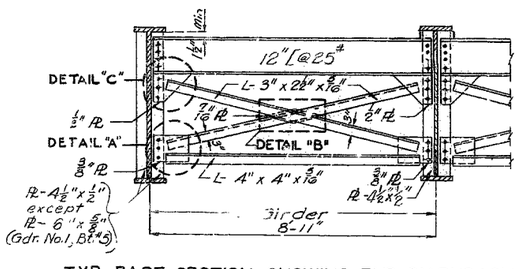

TYP. PART SECTION SHOWING END DIAPHRAGMS

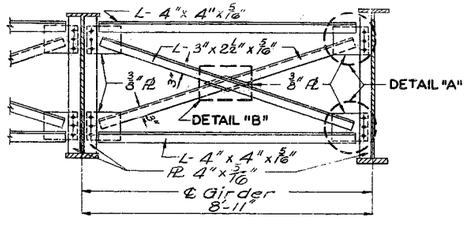

TYP. PART SECTION SHOWING INT. DIAPHRAGMS

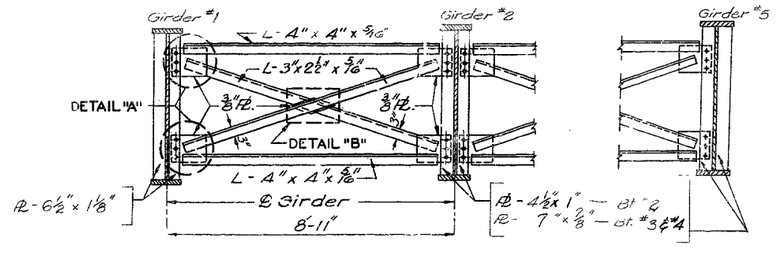

TYP. PART SECTION SHOWING CROSS FRAMES

SPS | REVISED | STD

DETAILED JUNE 1970 BY MOLAI
CHECKED OCT. 1970 BY CHUANG

Note: This drawing is not to scale. Follow dimensions.

Sheet No. 13 of 16

JACKSON COUNTY

A-2851

450

MISSOURI STATE HIGHWAY DEPARTMENT

FED. ROAD DIST. NO.	STATE	FED. AID PROJ. NO.	FISCAL YEAR	SHEET NO.	TOTAL SHEETS
5	MO.		19	65	

Note: Longitudinal Reinforcing Steel shall be placed so that ends shall not be more than 1" ± from 6"x5/8" PL at Expansion Device.
Transverse Steel in slab near expansion device shall be shifted in field to clear 5/16" plate.

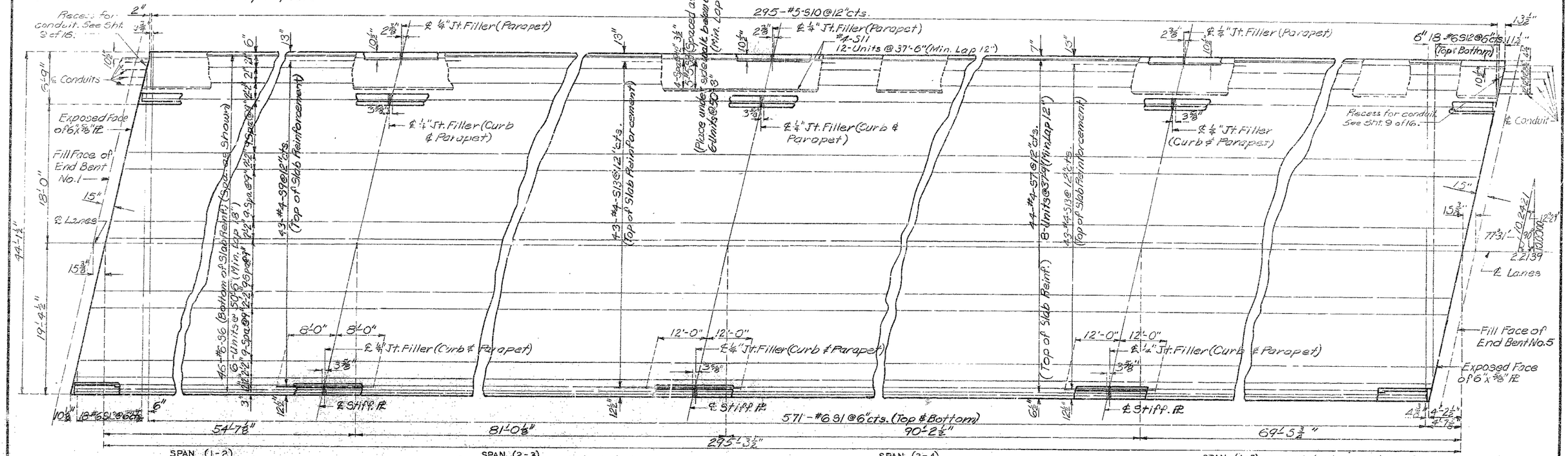

PLAN OF SLAB SHOWING REINFORCEMENT

Note: Longitudinal dimensions shown are taken parallel to grade at centerline of Lanes.

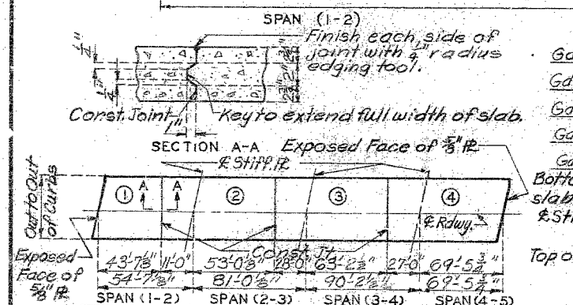

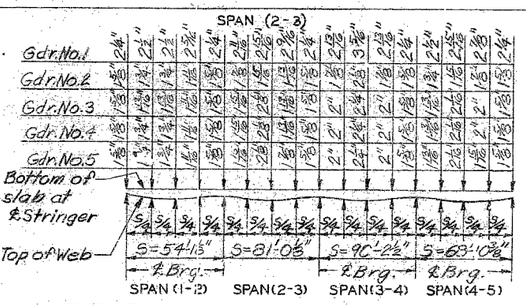

THEORETICAL SLAB HAUNCHING DIAGRAM

	Sequence of Pours			
	Direction			
Basic	1	2	3	4
Alternate "A" Pours	End to 2 / 1 + 2	1 to 3 / End to 3	2 to 4 / 3	3 to End / 4
Alternate "B" Pours	1 + 2	End to 3	3 + 4	2 to End
Alternate "C" Pours	1 + 2 + 3 + 4	End to End		

Note: The contractor shall pour and satisfactorily finish the slab pours at a rate of not less than 46 cubic yards per hour unless he elects to use an approved retarder to retard the set of the concrete to 2.5 hours in which case he may reduce his pouring and finishing rate to not less than 28 cubic yards per hour.

SLAB POURING SEQUENCE

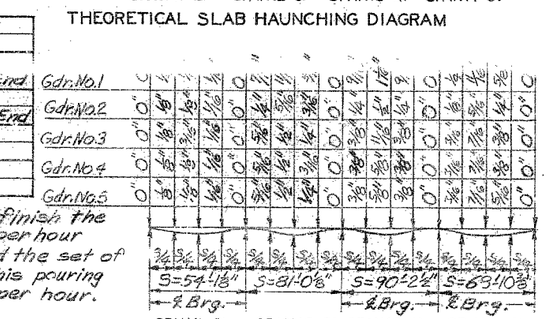

7% Structural Steel - Girder #1
14% Structural Steel - Girders #2, #3, #4, #5.

DEAD LOAD DEFLECTION

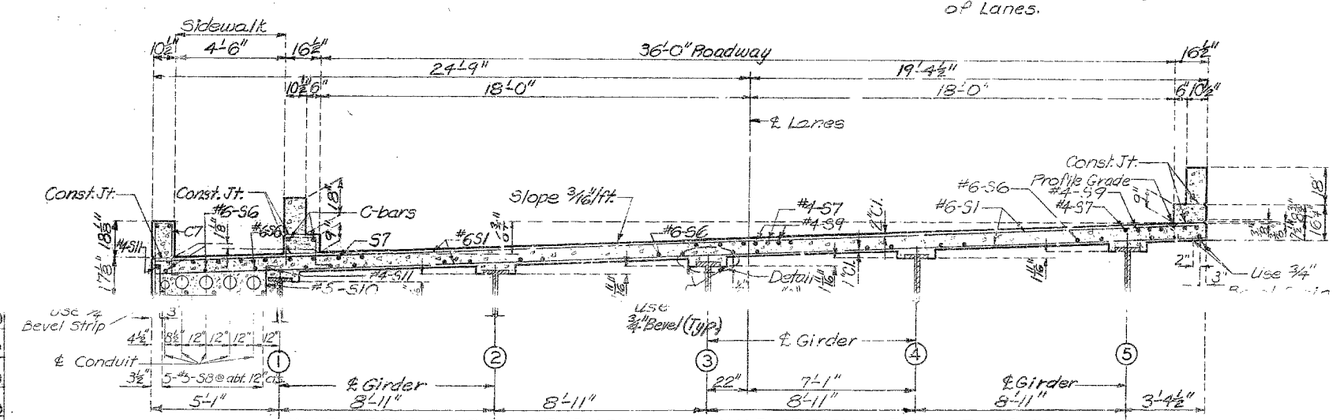

HALF SECTION NEAR INT. DIAPH.

HALF SECTION NEAR INT. BENTS

Note: For details and reinforcement of curb and parapet not shown, see Sheet No. 15 and 16 of 16.

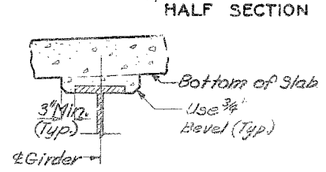

DETAIL "A"

DETAILED JUNE 1970 BY POLACEK
CHECKED OCT. 1970 BY CHUANG

Note: This drawing is not to scale. Follow dimensions.

Sheet No. 14 of 16

JACKSON COUNTY

A-2851

4531

MISSOURI STATE HIGHWAY DEPARTMENT

FED. ROAD DIST. NO.	STATE	FED. AID PROJ. NO.	FISCAL YEAR	SHEET NO.	TOTAL SHEETS
5	MO.		19	66	

GENERAL BRIDGE RAIL NOTES:

All bridge rail posts shall be set normal to grade.
Aluminum tube bridge rail shall be bent to conform to vertical and horizontal alignment of parapet.
Aluminum washer shims between top of parapet and post base may be used for adjusting bridge rail alignment. Maximum thickness of shims to be 3/8". Where more tilting of post is required for proper alignment, concrete bearing areas shall be ground down.
All parts of bridge rail, except anchor bolts, nuts, washers, and set screws are to be of aluminum material.
All fillets 1/4" except as noted.
All drafts 3° except as noted.
Omit set screw in side of rail posts adjacent to filled joints in curb and parapet of rail expansion points.

Top of curbs and parapets to be built parallel to grade with curb and parapet joints normal to grade.

All exposed edges of curbs and parapets shall have 1/2" radius or 3/8" bevel unless otherwise noted.

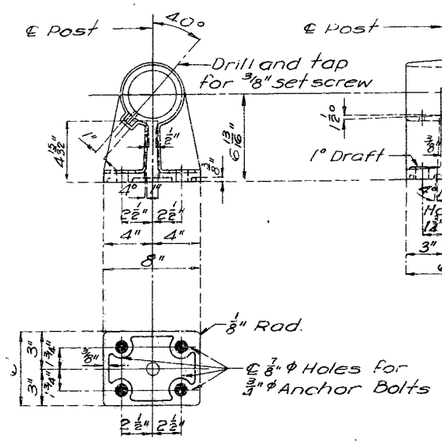

POST DETAILS

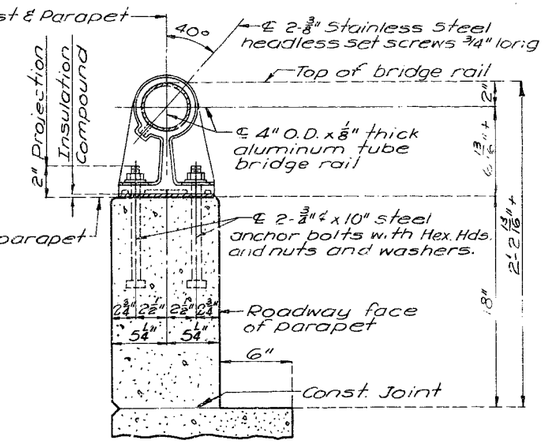

SECTION THRU BRIDGE RAIL

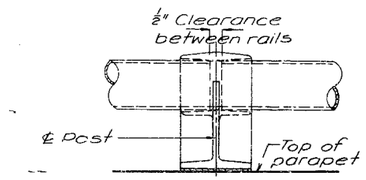

RAIL SPLICE OR EXP.

TYPICAL BRIDGE RAIL DETAILS

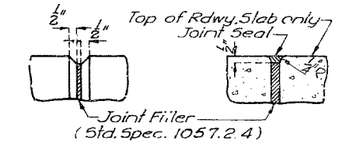

FILLED JOINT DETAILS

ONE TUBE ALUMINUM RAILING

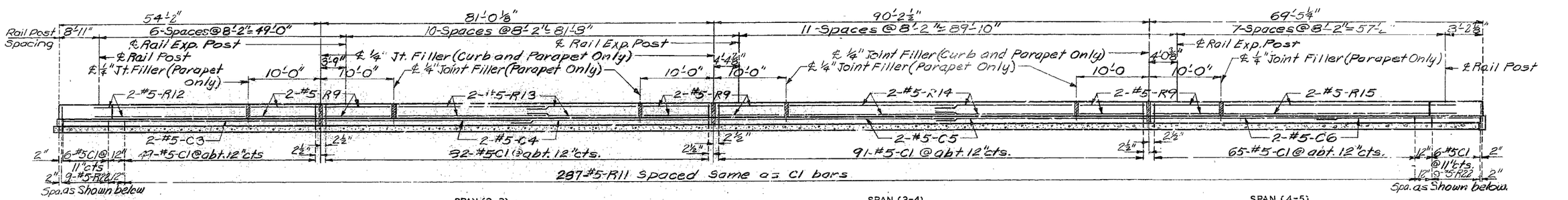

SECTION NEAR LEFT CURB AND PARAPET OF ROADWAY (RIGHT CURB AND PARAPET SIMILAR)

Note: Dimensions are taken parallel to grade at top of parapet.

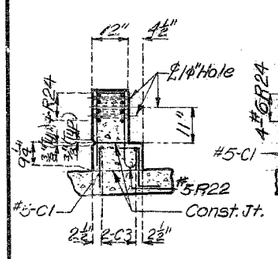

SECTION C-C

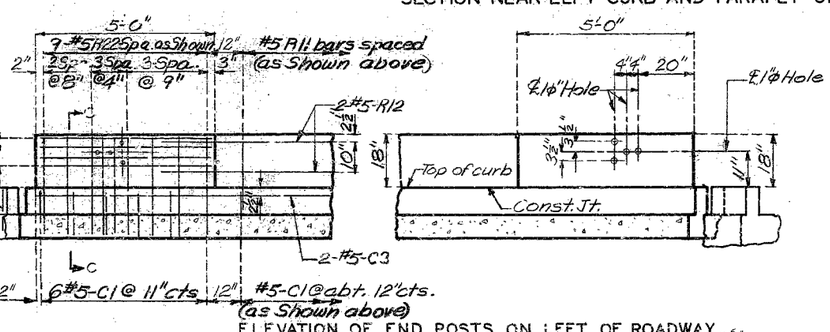

ELEVATION OF END POSTS ON LEFT OF ROADWAY (RIGHT SIDE POSTS SIMILAR)

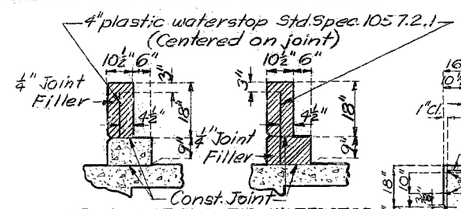

DETAILS OF PLASTIC WATERSTOP

Note: Plastic waterstop shall be placed in all curb and parapet filled joints; cost of plastic waterstop complete in place to be included in unit price bid for concrete.

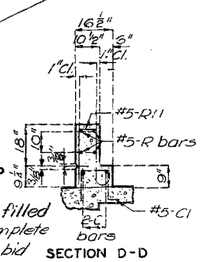

SECTION D-D

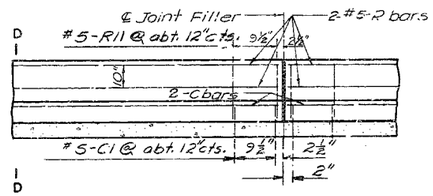

ELEVATION OF CURB & PARAPET

Note: For horizontal curb and parapet bars use a minimum lap of 15" for #5 and 18" for #6.

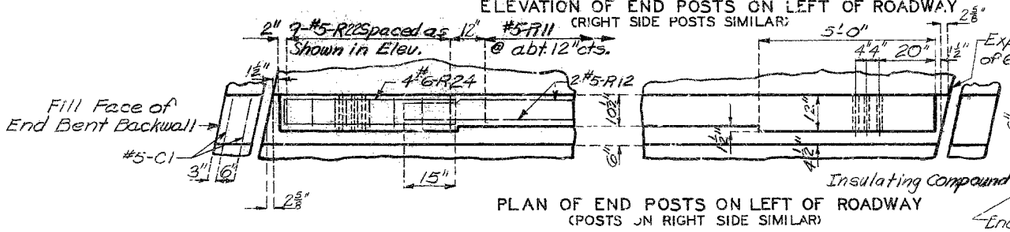

PLAN OF END POSTS ON LEFT OF ROADWAY
(POSTS ON RIGHT SIDE SIMILAR)

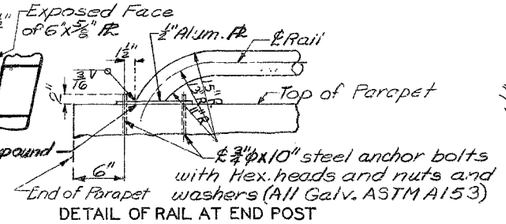

DETAIL OF RAIL AT END POST

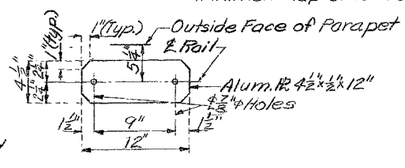

DETAIL OF ALUM. BASE PLATE

DETAILED JUNE 1970 BY POLACEK
CHECKED OCT. 1970 BY CHUANG

Note: This drawing is not to scale. Follow dimensions.

Sheet No. 15 of 16

JACKSON COUNTY

A-2851

STD. 1.5.2 | REVISED
MAR. 1964 | OCT. 1968

452

MISSOURI STATE HIGHWAY DEPARTMENT

FED ROAD DIST. NO.	STATE	FED AID PROJ. NO.	FISCAL YEAR	SHEET NO.	TOTAL SHEETS
5	MO.		19	67	

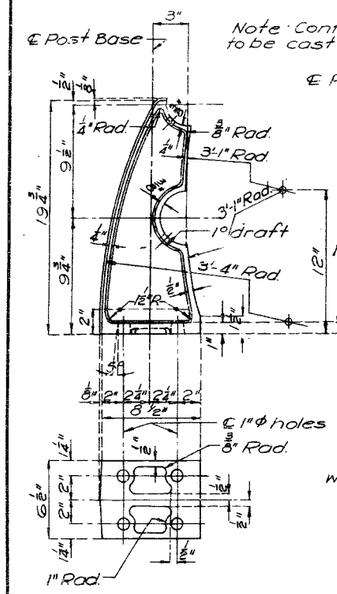

HANDRAIL POST

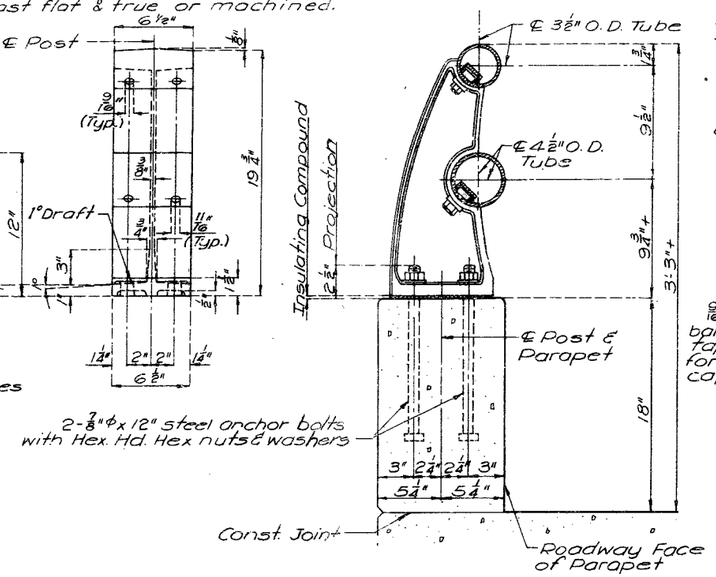

SECTION THRU HANDRAIL

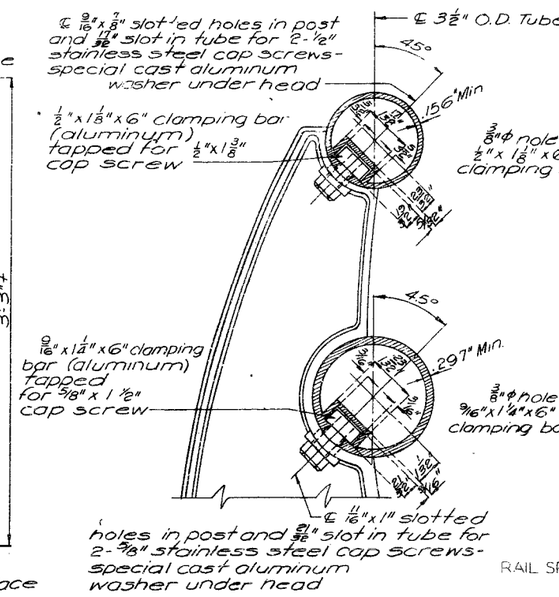

RAIL ATTACHMENT TO POST

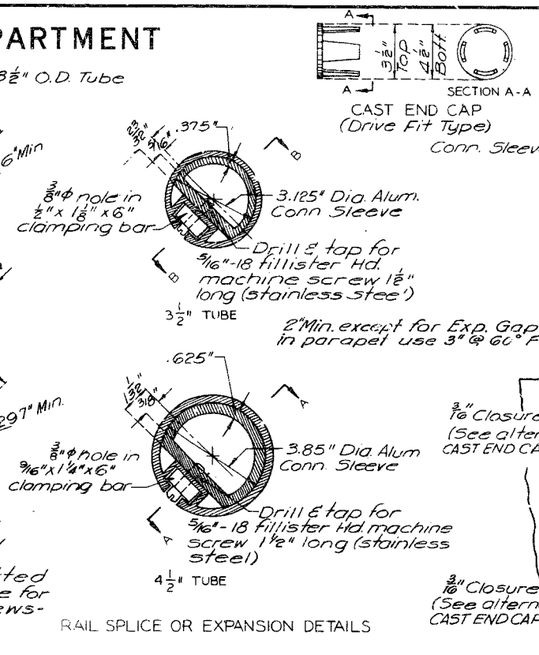

RAIL SPLICE OR EXPANSION DETAILS

CAST END CAP (Drive Fit Type)

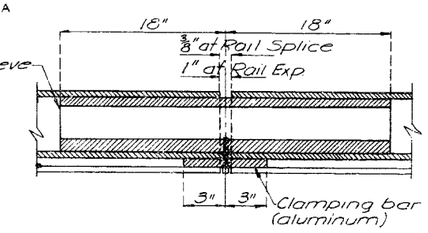

SECTION A-A & B-B

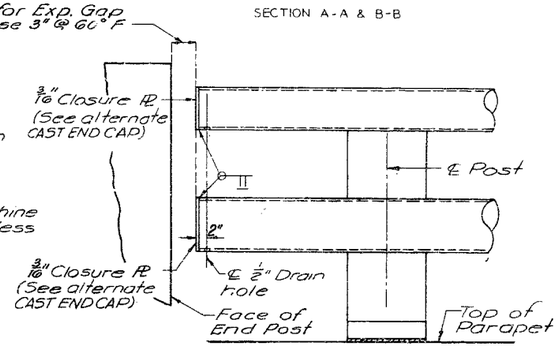

ELEVATION AT END RAIL POST

TWO TUBE ALUMINUM RAIL

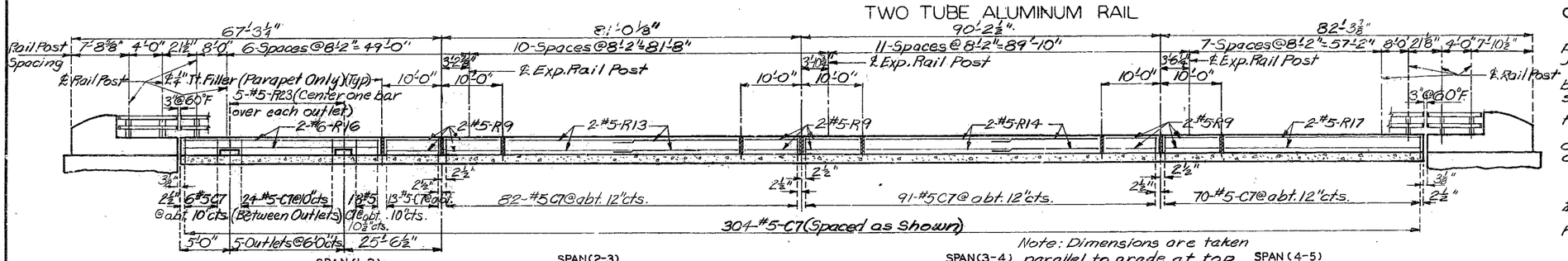

GENERAL NOTES:

Top of curbs and parapets to be built parallel to grade, with curb and parapet joints (except at end posts) normal to grade.

All exposed edges of end posts shall have ½" bevel. All exposed edges of curbs and parapets shall have ½" radius or ⅜" bevel.

All handrail posts shall be set normal to grade.

Aluminum tube handrail shall be bent to conform to vertical and horizontal alignment of parapet.

All fillets ¼" except as noted.

All drafts 3° except as noted.

All rail splices shall be located near a ¼ point between rail posts.

All outside corners of aluminum posts to have ⅜" radius except as noted.

Concrete end posts to be vertical.

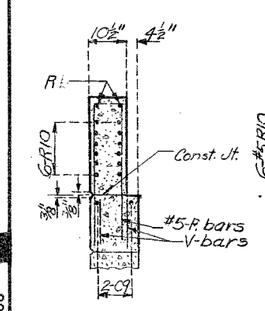

SECTION C-C

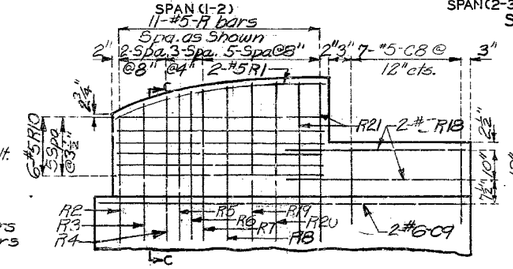

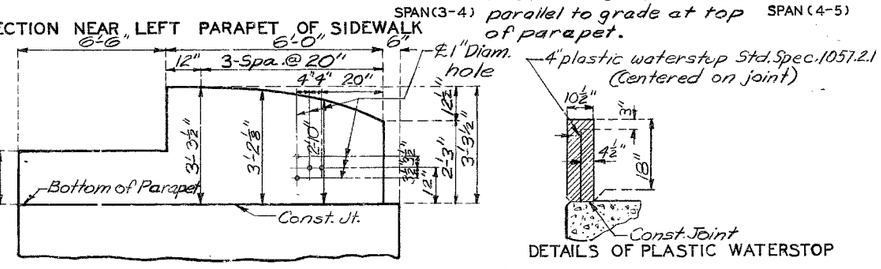

Note: Dimensions are taken parallel to grade at top of parapet.

DETAILS OF PLASTIC WATERSTOP

Note: Plastic waterstop shall be placed in all parapet filled joints.

Cost of plastic waterstop complete in place to be included in unit price bid for concrete.

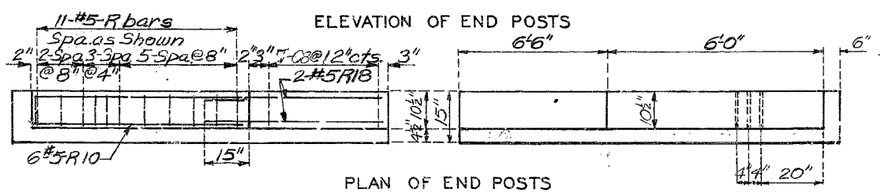

ELEVATION OF END POSTS

PLAN OF END POSTS

Note: This drawing is not to scale. Follow dimensions.

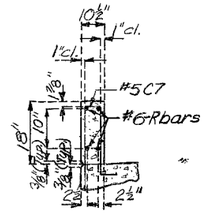

SECTION D-D

Note: When Outlets are omitted space #5-C7 bars at abt. 12"cts.

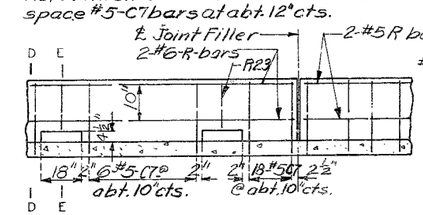

ELEVATION OF PARAPET

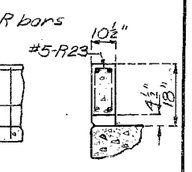

SECTION E-E

Note: For horizontal parapet bars use a minimum lap of 15" for #5 and 18" for #6.

JACKSON COUNTY

453

NO.	REVISED
1, 5, 6	OCT. 1968
JULY 1964	

DETAILED JUNE 1970 BY POLACEK
CHECKED OCT. 1970 BY CHUANG

Sheet No. 10 of 13.

A-2851

MISSOURI STATE HIGHWAY DEPARTMENT

FED. ROAD DIST. NO.	STATE	FED. AID PROJ. NO.	FISCAL YEAR	SHEET NO.	TOTAL SHEETS
5	MO.		19	52	

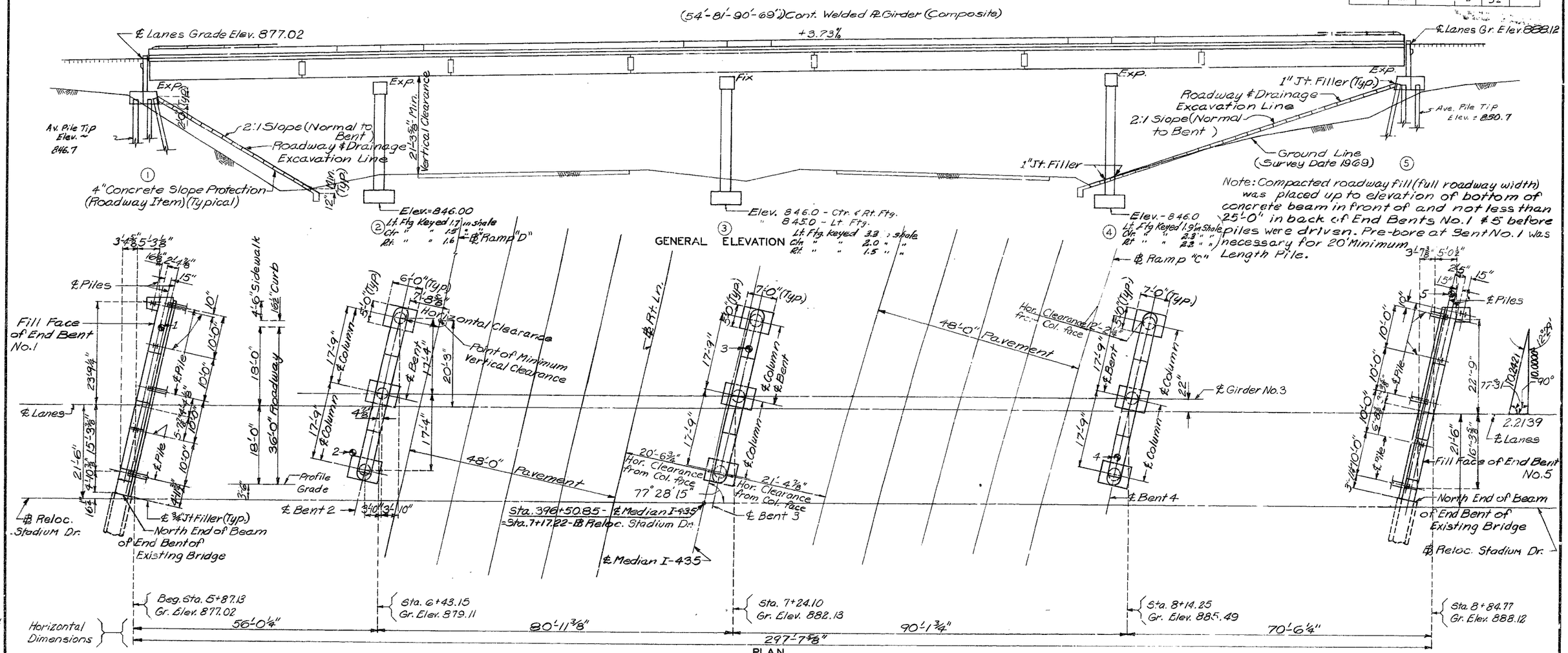

Note: A minimum vertical clearance of 15'-0" from crown of existing lanes and a minimum lateral clearance of 40'-0" centered on existing lanes was maintained during construction.

Note: In no case were footings of Bents No. 2, 3, and 4 be placed higher than elevations shown.

FINAL QUANTITIES				
ITEM		SUBSTR.	SUPERSTR.	TOTAL
Class I Excavation for Structures	Cu. Yd.	130		130
Steel Piles in Place (10")	Lin. Ft.	320		320
Class B Concrete	Cu. Yd.	185.8		185.8
Class B1 Concrete	Cu. Yd.		416.0	416.0
Reinforcing Steel	Lb.	30,220	126,680	156,900
Conduit System on Structure (K.C. Power & Light)	Lump sum			1
Fabricated Structural Carbon Steel	Lb.		270,620	270,620
Painting (2 Coats)	Ton		134.7	134.7
Bridge Rail (One Tube)	Lin. Ft.		588	588
High Strength Bridge Rail (Two Tube)	Lin. Ft.		308	308
CONTINGENT ITEMS				
Class I Excavation for Structures +25%	Cu. Yd.	1.5		1.5
Foundation Test Holes	L. F.	36		36

Note: All concrete and reinforcement in end posts, parapets, and curbs was included with superstructure quantities.

Note: For Boring Data, See Sheet No. 5 of 16.
"●" Indicates location of boring.

B.M. Elev. - P.K. nail in N.W. wing wall of E.B.L. Stadium Drive Bridge over I-435 Elev. - 877.91

BRIDGE: STADIUM DRIVE UNDERPASS

STATE ROAD INTERSTATE ROUTE 435

IN KANSAS CITY

PROJECT NO. 4-U-435-46 (RTE. I-435) **STA.** 5+87.13

JACKSON COUNTY

SUBMITTED BY W. R. Carney BRIDGE ENGINEER DATE 10-21-71

APPROVED BY Robert E. Hunter CHIEF ENGINEER DATE 10-21-71

DESIGNED JULY 1970 BY RAITHEL, CHUANG
DETAILED JULY 1970 BY POLACEK, MOLAI
CHECKED OCT. 1970 BY CHUANG, RAITHEL

Note: This drawing is not to scale. Follow dimensions.

Sheet No. 1A of 2

STD. 6 11.60
STD. 706.30A
A-2851

454

SNAPPLAKE

MISSOURI STATE HIGHWAY DEPARTMENT

FED. ROAD DIST. NO.	STATE	FED. AID PROJ. NO.	FISCAL YEAR	SHEET NO.	TOTAL SHEETS
	MO.			58	

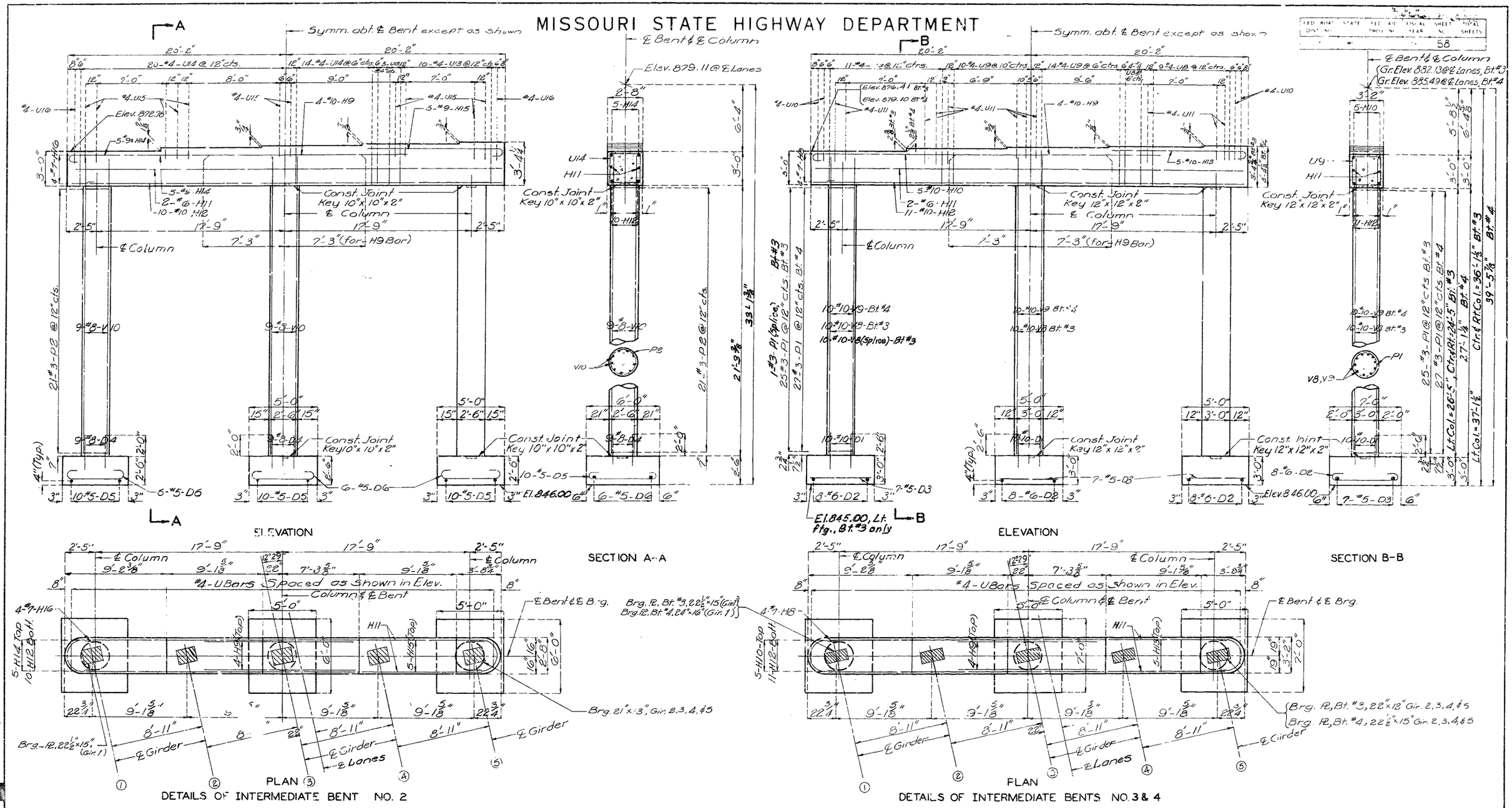

Note: All reinforcing bars in tops of substructure beams or caps were spaced to clear anchor bolts for bearings by at least ½".

NO.	SEPT. 1962	REVISED	APRIL 1969
19.6			

DETAILED JULY 1970 BY MOLAI
CHECKED NOV. 1970 BY RAITHEL

Note: This drawing is not to scale. Follow dimensions

Sheet No. 7A of 2

FINAL PLANS

JACKSON COUNTY

A-2851

455