MISSOURI STATE HIGHWAY DEPARTMENT

FED. ROAD DIST. NO.	STATE	FED. AID PROJ. NO.	FISCAL YEAR	SHEET NO.	TOTAL SHEETS
5	MO.		19	131	

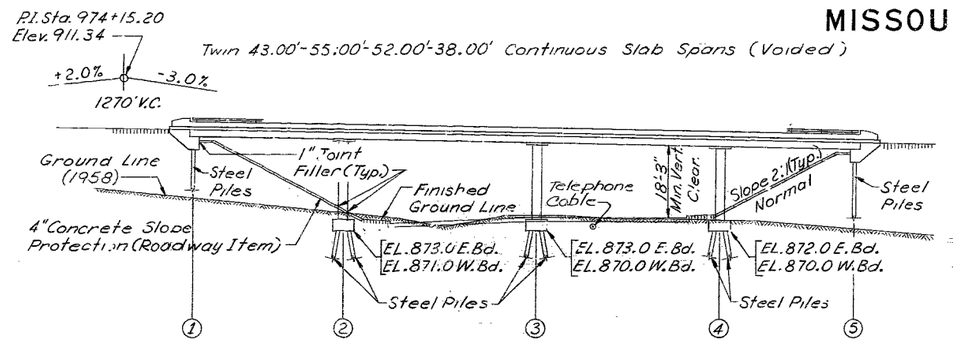

GENERAL ELEVATION

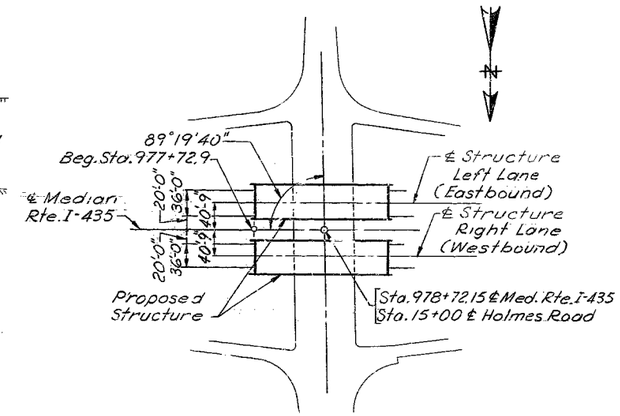

LOCATION SKETCH

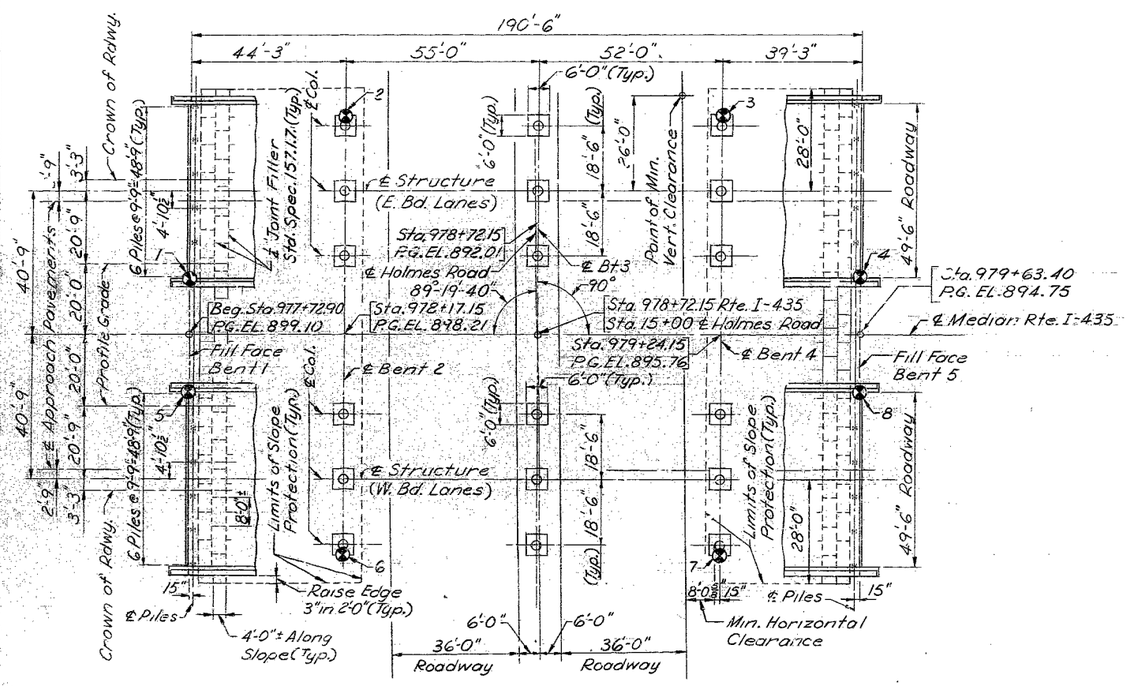

PLAN

GENERAL NOTES:

DESIGN SPECIFICATIONS: A.A.S.H.O. - 1961

DESIGN LOADING:

HS 20-44; 15 #/sq. ft. Future Wearing Surface;
Modified 24,000 # Tandem Axle;
Earth 120#; Equivalent Fluid Pressure 30#.

DESIGN UNIT STRESSES:

Class B Concrete (Substructure) fc = 1,200 p.s.i.
Class B1 Concrete (Superstructure) fc = 1,600 p.s.i.
Reinforcing Steel fs = 20,000 p.s.i.
Steel Pile (A.S.T.M. A36-62T) fb = 9,000 p.s.i.

SURFACE SEAL: Superstructure deck to be surface sealed.

FALSEWORK:

Falsework over existing lanes shall be constructed with a minimum vertical clearance of 13'-0" from crown of existing lanes and a minimum lateral clearance of 28'-0" centered on existing lanes.

ESTIMATED QUANTITIES

Item		Substr.	Superstr.	Total
Class I Excavation for Structures	Cu. Yd.	145	—	145
10" Steel Piles in Place	Lin. Ft.	1146	—	1146
10" Steel Pile Cut Offs	Lin. Ft.	144	—	144
12" Steel Piles in Place	Lin. Ft.	696	—	696
12" Steel Pile Cut Offs	Lin. Ft.	144	—	144
Class B Concrete	Cu. Yd.	72.0	—	72.0
Class B1 Concrete	Cu. Yd.	—	1346.0	1346.0
Reinforcing Steel	Lb.	2000	314,690	316,690
Bridge Rail (Single Tube Type)	Lin. Ft.	—	761	761

Note: All concrete and reinforcement above footings is included in superstructure quantities.

No payment for excavation will be allowed at End Bents No. 1 & 5.
Excavation for Bents No. 2 & 4 will be paid for from the finished ground line.

PILE DATA

BENT NO.		1		2		3		4		5	
LANE		E.Bd.	W.Bd.	E.Bd.	W.Bd.	E.Bd.	W.Bd.	E.Bd.	W.Bd.	E.Bd.	W.Bd.
Pile Type and Size		10BP42		12BP53		12BP53		10BP42		10BP42	
Number		6	6	12	12	12	12	12	12	6	6
Approximate Length	Ft.	25	30	15	15	20	20	20	20	40	40
Design Bearing Value	Ton	38	38	57	57	57	57	54	54	38	38
* Hammer Energy Req'd.	Ft. Lbs	8500	8500	12800	12800	12800	12800	12100	12100	8500	8500

PILE NOTES:

All pile shall be driven to practical refusal at 1.9 times the design bearing value.
* Minimum Energy Requirement of hammer based on plan length and design bearing value of pile.

Note. For location of existing utility conduits see Road Plans.

Compacted roadway fill (full roadway width) shall be placed up to elevation of bottom of concrete beam in front of and not less than 25'-0" in back of End Bents before steel piles are driven.

BORING DATA:

For Boring Data see Sheet No. 7 of 8.
"⊗" Indicates location of boring.

BENCH MARK:

B.M. 103 — Elev. 864.17
□ On North Headwall Culvert 200' Rt. Sta. 980+30.

STATE OF MISSOURI — EUGENE L. FIELDHAMMER — NUMBER E-10795 — REGISTERED PROFESSIONAL ENGINEER

SUBMITTED BY E. L. Fieldhammer
REGISTERED PROFESSIONAL ENGINEER
MISSOURI NO. E-10795

BRIDGE OVER HOLMES ROAD

STATE ROAD INTERSTATE ROUTE 435

ABOUT 4 MILES NORTH OF MARTIN CITY

PROJECT NO. I-IG-435-1(53) (RTE. I-435) **STA.** 977+72.9

JACKSON COUNTY

SUBMITTED BY D. B. Gaudaur, BRIDGE ENGINEER — DATE 5/20/66
APPROVED BY M. J. Mulle, CHIEF ENGINEER — DATE 5/20/66

STD. 54.00
A-1662

DESIGNED OCT. 1965 BY J. PARIKH
DETAILED OCT. 1965 BY VIEHLAND
CHECKED NOV. 1965 BY MISSLER

R. W. BOOKER & ASSOCIATES, INC.
CONSULTING ENGINEERS
215 NORTH ELEVENTH ST.
ST. LOUIS 1, MISSOURI

Note: This drawing is not to scale. Follow dimensions.

Sheet No. 1 of 8.

434

MISSOURI STATE HIGHWAY DEPARTMENT

FED. ROAD DIST. NO.	STATE	FED. AID PROJ. NO.	FISCAL YEAR	SHEET NO.	TOTAL SHEETS
5	MO.		19	132	

COMPLETE BILL OF REINFORCING STEEL

NO.	SIZE	LENGTH	MARK	LOCATION
SUPER STR. (E.Bd. & W.Bd. Lanes)				
1768	#5	26'-6"	S1	Slab
140	#5	29'-9"	S3	"
72	#11	30'-3"	S4	"
68	#11	20'-0"	S5	"
68	#10	10'-0"	S6	"
140	#5	26'-0"	S7	"
72	#11	30'-9"	S8	"
68	#11	19'-6"	S9	"
68	#10	10'-9"	S10	"
280	#5	27'-6"	S11	"
72	#11	23'-9"	S12	"
68	#10	15'-6"	S13	"
68	#8	8'-3"	S14	"
264	#4	2'-3"	S15	"
72	#11	44'-6"	S16	"
68	#9	32'-3"	S17	"
68	#8	20'-0"	S18	"
72	#11	57'-9"	S19	"
68	#9	32'-6"	S20	"
68	#8	20'-6"	S21	"
72	#10	54'-3"	S22	"
68	#9	30'-0"	S23	"
68	#8	19'-6"	S24	"
72	#9	40'-3"	S25	"
68	#9	30'-8"	S26	"
68	#7	17'-9"	S27	"
8	#4	25'-3"	S28	"
760	#5	3'-6"	C1	Curbs
16	#5	22'-6"	C2	"
16	#5	28'-0"	C3	"
16	#5	26'-6"	C4	"
16	#5	20'-0"	C5	"
48	#5	3'-0"	C6	"
16	#6	5'-0"	C7	"
48	#5	4'-9"	R1	End Posts
8	#5	5'-6"	R2	"
8	#5	6'-3"	R3	"
8	#5	6'-9"	R4	"
8	#5	7'-0"	R5	"
16	#5	7'-3"	R6	"
912	#5	5'-3"	R7	Parapets
16	#5	33'-9"	R8	"
96	#5	9'-6"	R9	"
16	#5	34'-6"	R10	"
16	#5	31'-6"	R11	"
16	#5	28'-9"	R12	"
SUPERSTR. End Bents (E.Bd. & W.Bd.)				
48	#6	51'-6"	H1	Beams
392	#5	9'-6"	U1	"
280	#6	7'-9"	S2	"
32	#6	10'-0"	H2	Wings
16	#6	7'-0"	H3	"
40	#4	8'-0"	V1	"
16	#6	10'-0"	T1	"

NO.	SIZE	LENGTH	MARK	LOCATION
SUPER STR. Int. Bents (E.Bd. & W.Bd.)				
84	#9	51'-0"	G1	Beams
76	#11	54'-0"	G2	"
18	#11	13'-0"	G3	"
512	#5	8'-6"	U2	"
208	#5	9'-9"	U3	"
371	#3	7'-9"	V3	Columns
16	#9	23'-0"	V4	"
16	#9	21'-6"	V5	"
24	#9	23'-3"	V6	"
32	#9	21'-9"	V7	"
24	#9	25'-0"	V8	"
8	#9	25'-3"	V9	"
8	#9	23'-9"	V10	"
16	#9	24'-9"	V11	"
SUPER STR. Int. Bents (E.Bd. & W.Bd.)				
144	#5	2'-6"	D1	Footing
144	#6	7'-6"	D2	"

NO.	SIZE	LENGTH	MARK	LOCATION

BENDING SKETCHES & CUTTING DIAGRAMS

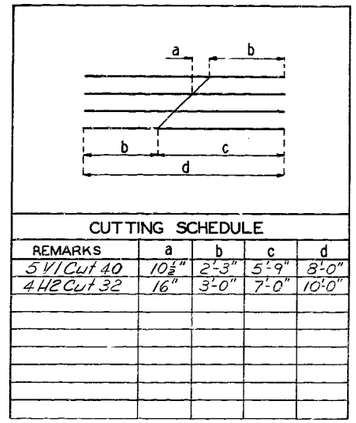

CUTTING SCHEDULE

REMARKS	a	b	c	d
5 V1 Cut 40	10 1/8"	2'-3"	5'-9"	8'-0"
4 H2 Cut 32	16"	3'-0"	7'-0"	10'-0"

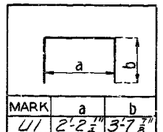

MARK	a	b
U1	2'-2 1/4"	3'-7 3/8"
D2	15"	3'-1 1/2"

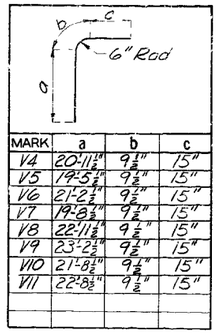

MARK	a	b	c
V4	20'-11 1/2"	9 1/2"	15"
V5	19'-5 1/2"	9 1/2"	15"
V6	21'-2 1/2"	9 1/2"	15"
V7	19'-8 1/2"	9 1/2"	15"
V8	22'-11 1/2"	9 1/2"	15"
V9	23'-2 1/2"	9 1/2"	15"
V10	21'-8 1/2"	9 1/2"	15"
V11	22'-8 1/2"	9 1/2"	15"

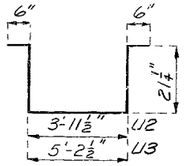

U2 - U3

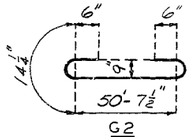

G2

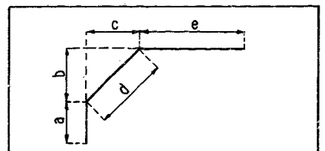

MARK	a	b	c	d	e
T1	17"	4'-3 1/2"	5'-0"	6'-7"	2'-0"

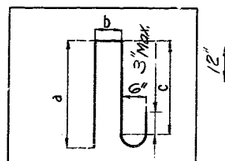

MARK	a	b	c
R2	2'-1"	7 1/2"	22"
R3	2'-5 1/2"	7 1/2"	2'-2 1/2"
R4	2'-8 1/2"	7 1/2"	2'-5 1/2"
R5	2'-10"	7 1/2"	2'-7"
R6	2'-11 1/4"	7 1/2"	2'-8 1/2"
R7	23 1/2"	7 1/2"	20 1/2"

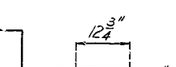

C1

S15

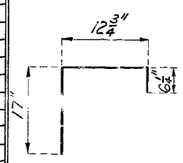

C6

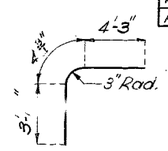

S2

V3

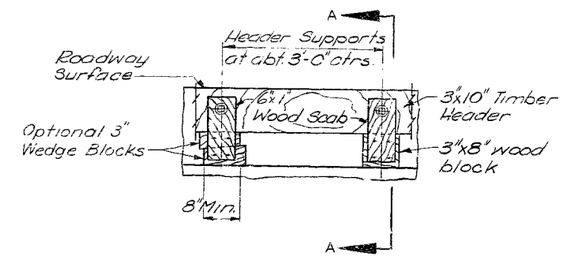

PART ELEVATION

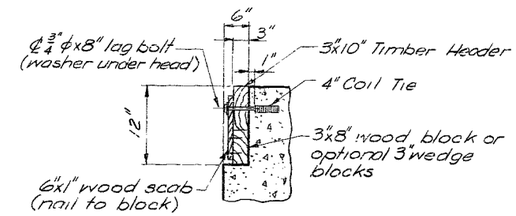

SECTION A-A

TIMBER HEADER DETAIL

NOTE:
Cost of timber headers complete in place to be included in price bid for concrete.

BRIDGE OVER HOLMES ROAD
STATE ROAD INTERSTATE ROUTE 435
ABOUT 4 MILES NORTH OF MARTIN CITY
PROJECT NO. I-IG-435-1(53)(RTE.I-435) **STA.** 977+72.9
JACKSON **COUNTY**

485

No. 904	Aug. 1963	Revised	Dec. 1964

DETAILED SEPT. 1965 BY HERD
CHECKED OCT. 1965 BY R. PARIKH

R. W. BOOKER & ASSOCIATES, INC.
CONSULTING ENGINEERS
215 NORTH ELEVENTH ST
ST. LOUIS 1, MISSOURI

Note: This drawing is not to scale. Follow dimensions.

Sheet No. 2 of 8.

A-1662

MISSOURI STATE HIGHWAY DEPARTMENT

FED. ROAD DIST. NO.	STATE	FED. AID PROJ. NO.	FISCAL YEAR	SHEET NO.	TOTAL SHEETS
5	MO.		19	133	

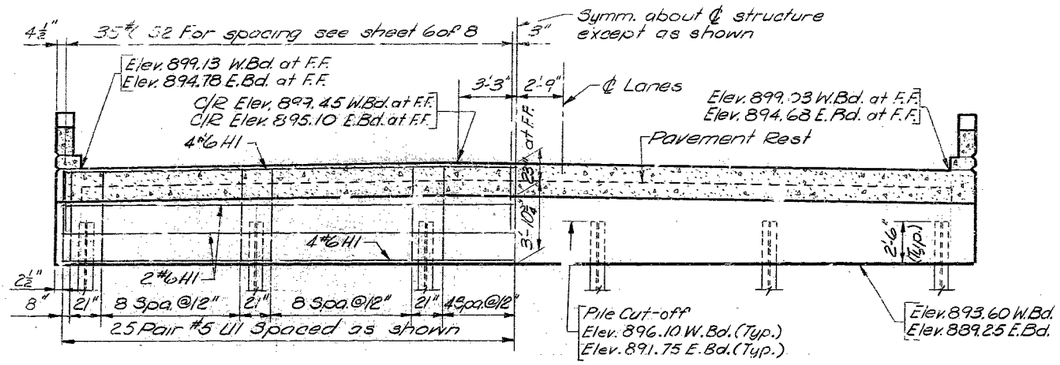

ELEVATION

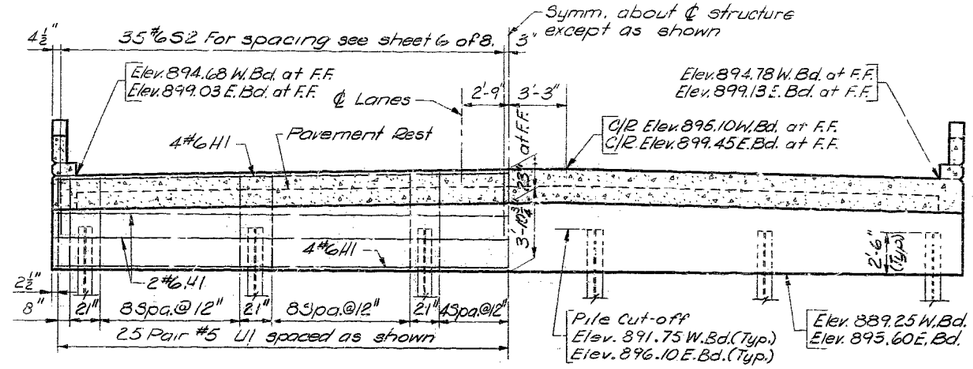

ELEVATION

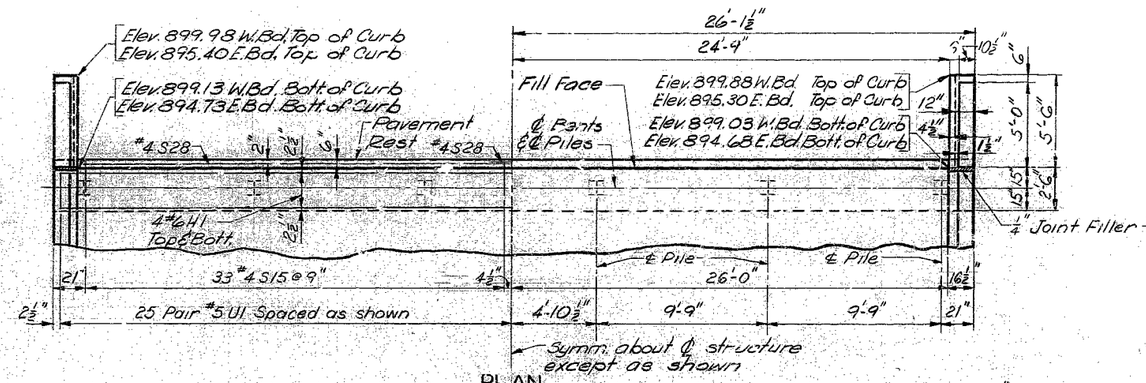

PLAN

WESTBOUND END BENT 1
EASTBOUND END BENT 5

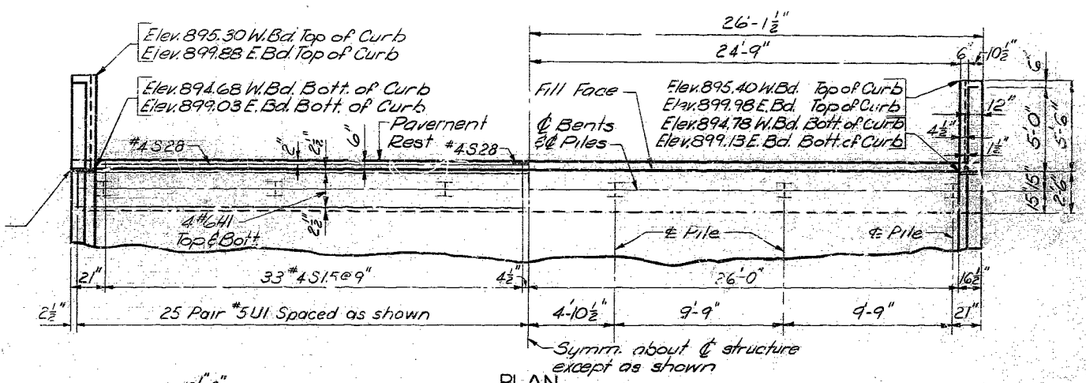

PLAN

WESTBOUND END BENT 5
EASTBOUND END BENT 1

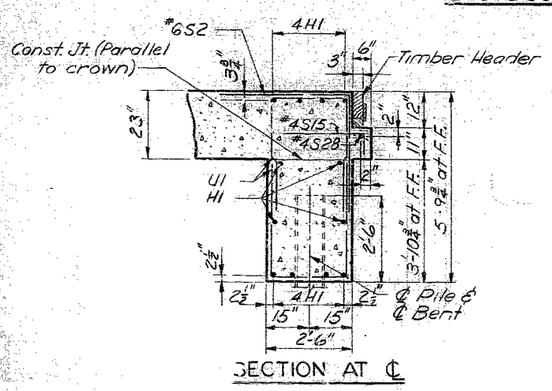

SECTION AT ℄

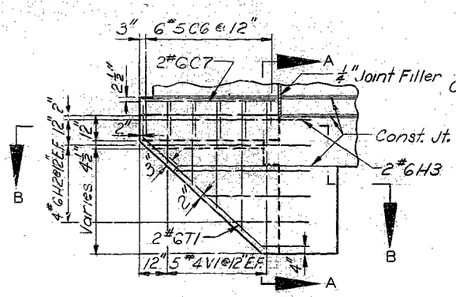

ELEVATION OF WING

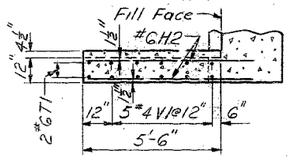

SECTION B-B

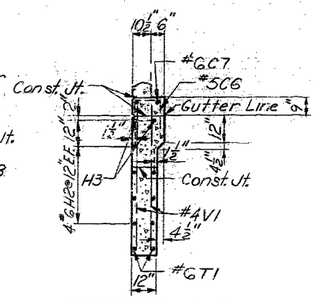

SECTION A-A

NOTES:
Fill at end bents shall not be carried above bottom of beam and wings until adjacent superstructure span is in place.
For Timber Header Detail see sheet No. 2 of 8.
For Steel Pile Splice see Sheet No. 5 of 8.

BRIDGE OVER HOLMES ROAD
STATE ROAD INTERSTATE ROUTE 435
ABOUT 4 MILES NORTH OF MARTIN CITY
PROJECT NO. I-IG-435-1(53) (RTE I-435) **STA.** 977+72.9
JACKSON **COUNTY**

DETAILED SEPT. 1965 BY HERD
CHECKED NOV. 1965 BY B. PARIKH

R. W. BOOKER & ASSOCIATES
CONSULTING ENGINEERS
215 NORTH ELEVENTH ST.
ST. LOUIS 1, MISSOURI

Note: This drawing is not to scale. Follow dimensions.

Sheet No. 3 of 8.

A-1662

NO CONSTRUCTION CHANGES

486

MISSOURI STATE HIGHWAY DEPARTMENT

FED. ROAD DIST. NO.	STATE	FED. AID PROJ. NO.	FISCAL YEAR	SHEET NO.	TOTAL SHEETS
5	MO.		19	134	

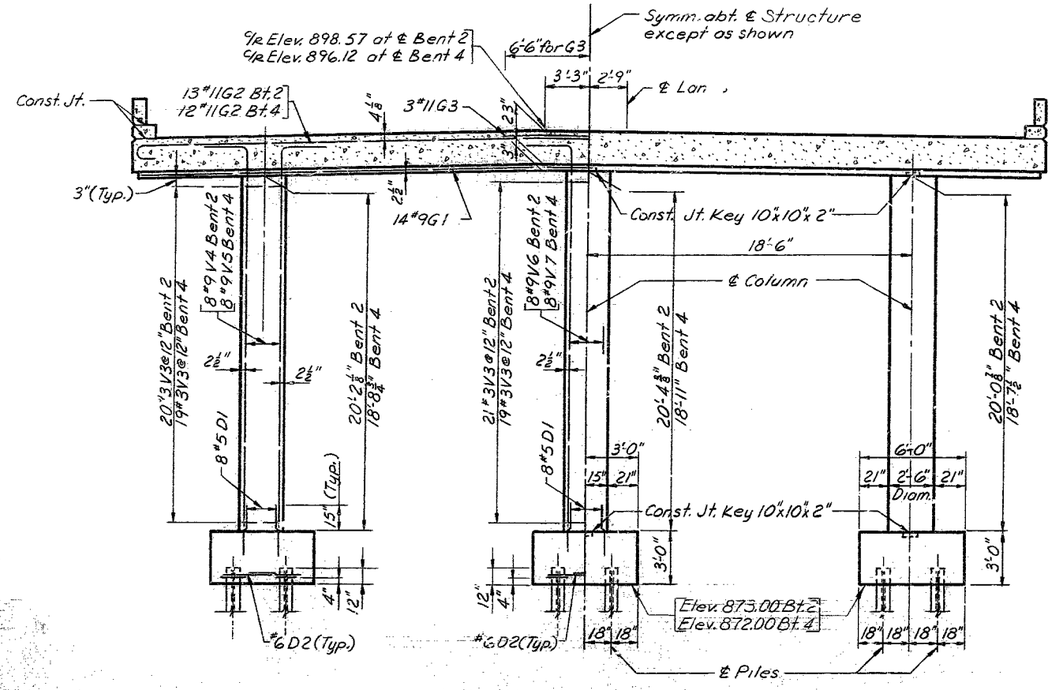

EASTBOUND ELEVATION

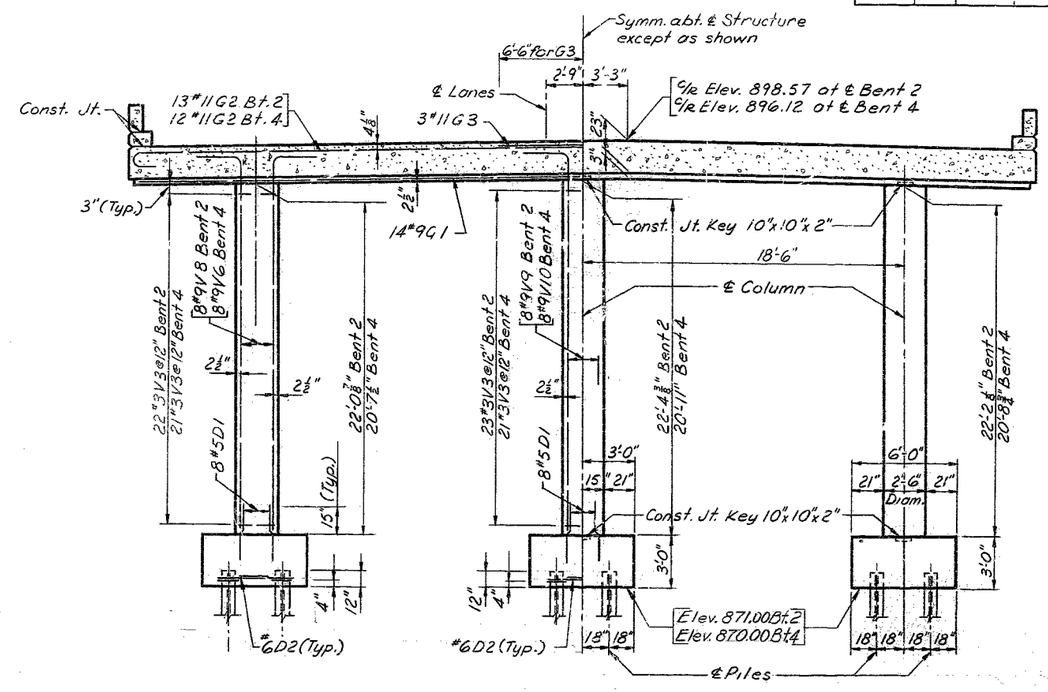

WESTBOUND ELEVATION

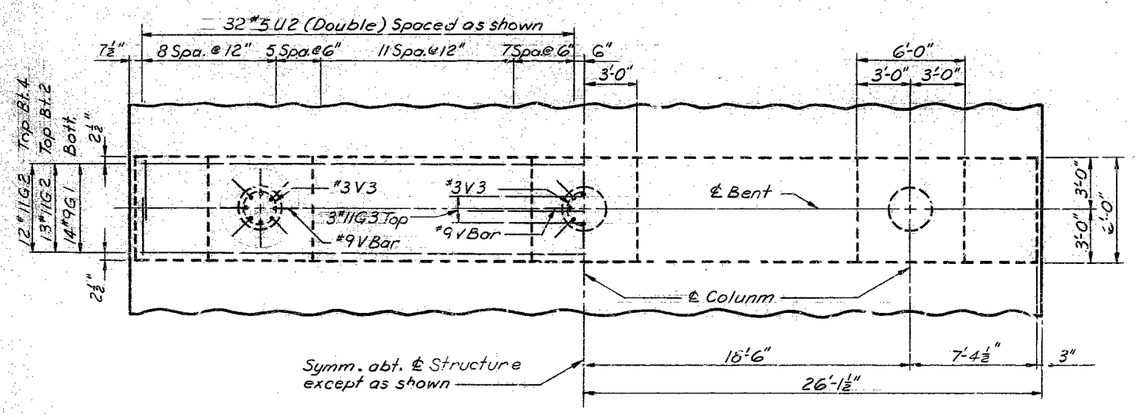

PLAN

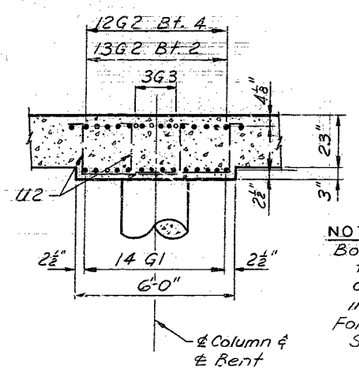

NOTE:
Bottom of drop panel to be parallel to top of slab both longitudinally and transversely. For Steel Pile Splice see Sheet 5 of 8.

SECTION AT ℄

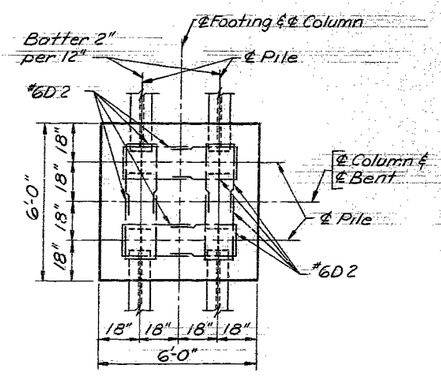

FOOTING PLAN

INTERMEDIATE BENTS NO. 2 & 4

BRIDGE OVER HOLMES ROAD
STATE ROAD INTERSTATE ROUTE 435
ABOUT 4 MILES NORTH OF MARTIN CITY
PROJECT NO. I-IG-435-1(53)(RTE I-435) **STA.** 977+72.9
JACKSON COUNTY

DETAILED SEPT. 1965 BY VIEHLAND
CHECKED OCT. 1965 BY R. PARIKH

R. W. BOOKER & ASSOCIATES, INC.
CONSULTING ENGINEERS
215 NORTH ELEVENTH ST.
ST. LOUIS 1, MISSOURI

Note: This drawing is not to scale. Follow dimensions.

Sheet No. 4 of 8.

A-1662

NO CONSTRUCTION CHANGES

287

MISSOURI STATE HIGHWAY DEPARTMENT

FED. ROAD DIST. NO.	STATE	FED. AID PROJ. NO.	FISCAL YEAR	SHEET NO.	TOTAL SHEETS
5	MO.		19	135	

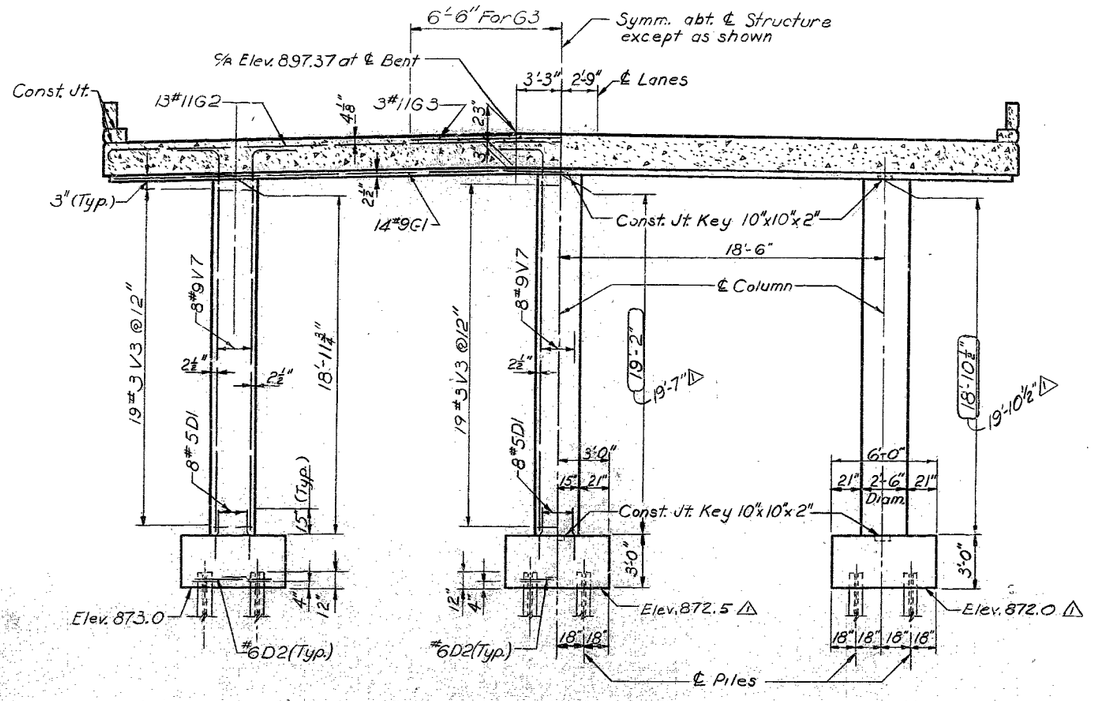

EASTBOUND ELEVATION

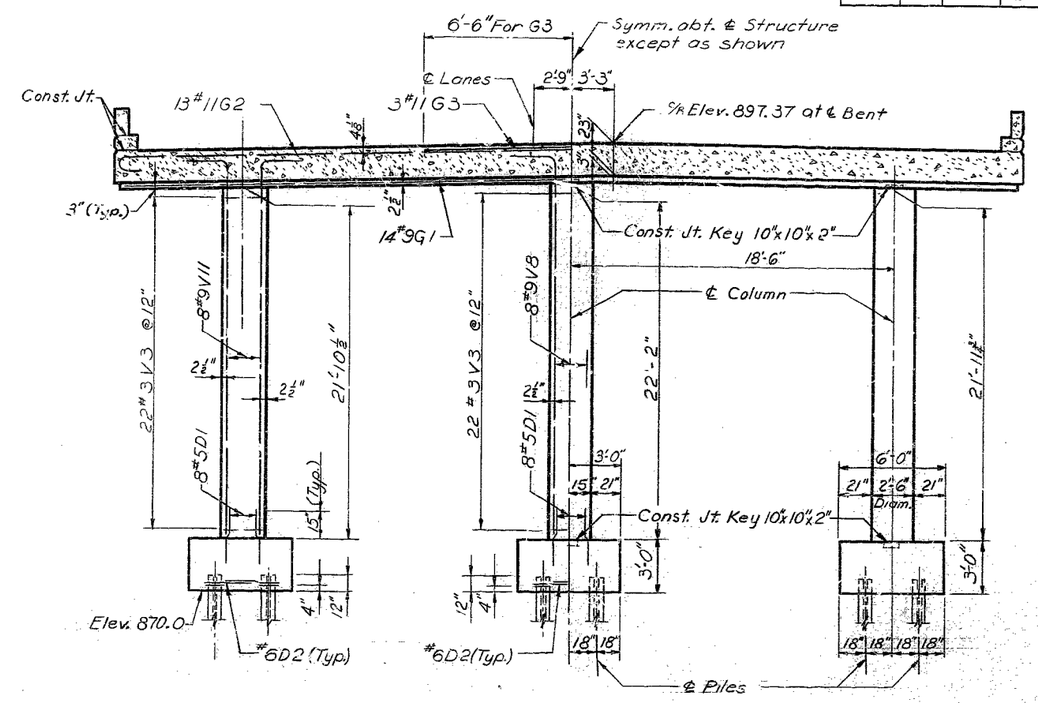

WESTBOUND ELEVATION

NOTE:
For Footing Plan see Sheet No. 4 of 8.

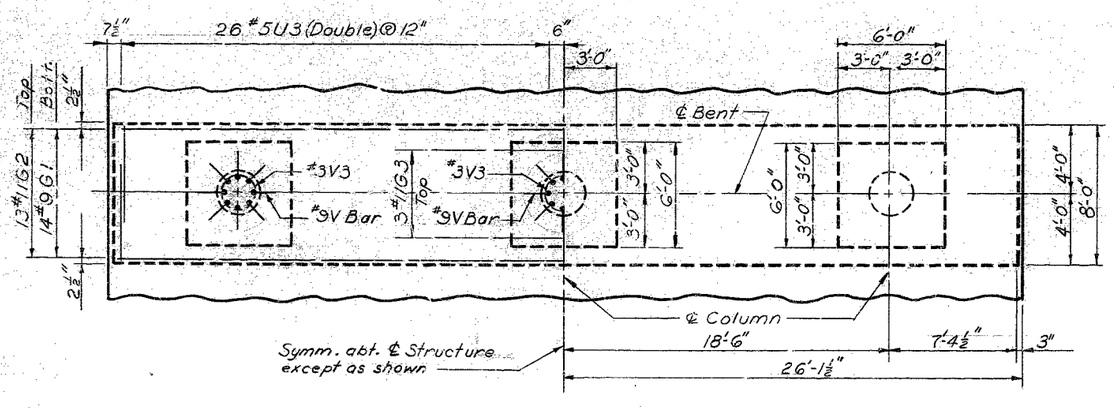

PLAN

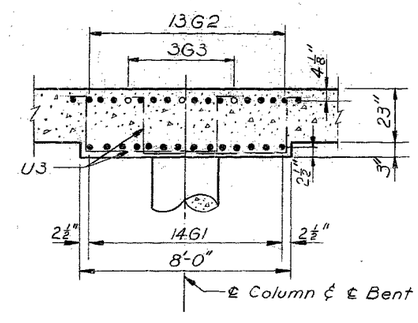

SECTION AT ℄

NOTE:
Bottom of drop panel to be parallel to top of slab both longitudinally and transversely.

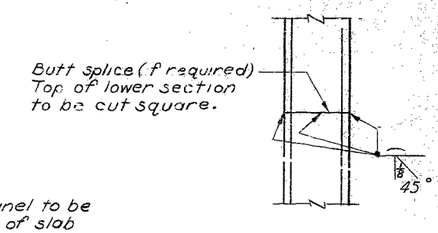

STEEL PILE SPLICE

INTERMEDIATE BENT NO. 3

BRIDGE OVER HOLMES ROAD
STATE ROAD INTERSTATE ROUTE 435
ABOUT 4 MILES NORTH OF MARTIN CITY
PROJECT NO. I-IG-435-1(53)(RTE I-435) **STA.** 977+72.9
JACKSON **COUNTY**

DETAILED SEPT. 1965 BY HOHLT
CHECKED OCT. 1965 BY A. PARIKH

R. W. BOOKER & ASSOCIATES, INC.
CONSULTING ENGINEERS
215 NORTH ELEVENTH ST.
ST. LOUIS 1, MISSOURI

Note: This drawing is not to scale. Follow dimensions.

△ Const. Change

Sheet No. 5 of 8.

A-1662

639

MISSOURI STATE HIGHWAY DEPARTMENT

FED. ROAD DIST. NO.	STATE	FED. AID PROJ. NO.	FISCAL YEAR	SHEET NO.	TOTAL SHEETS
5	MO.		19	136	

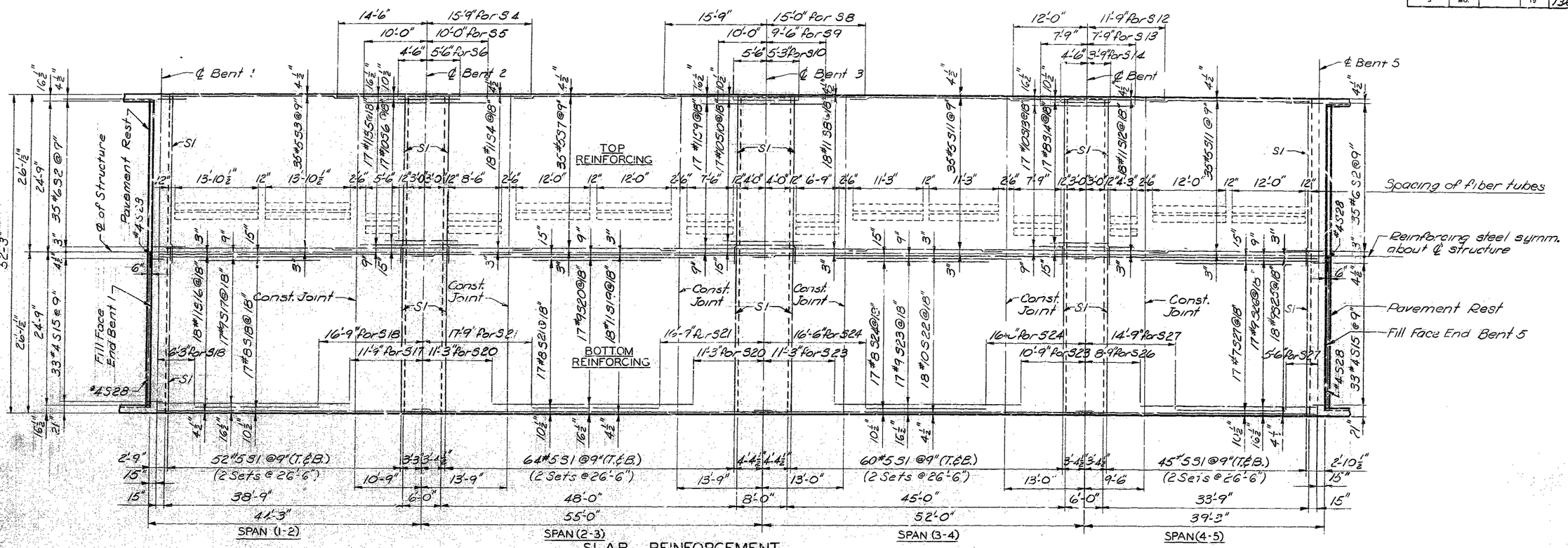

SLAB REINFORCEMENT

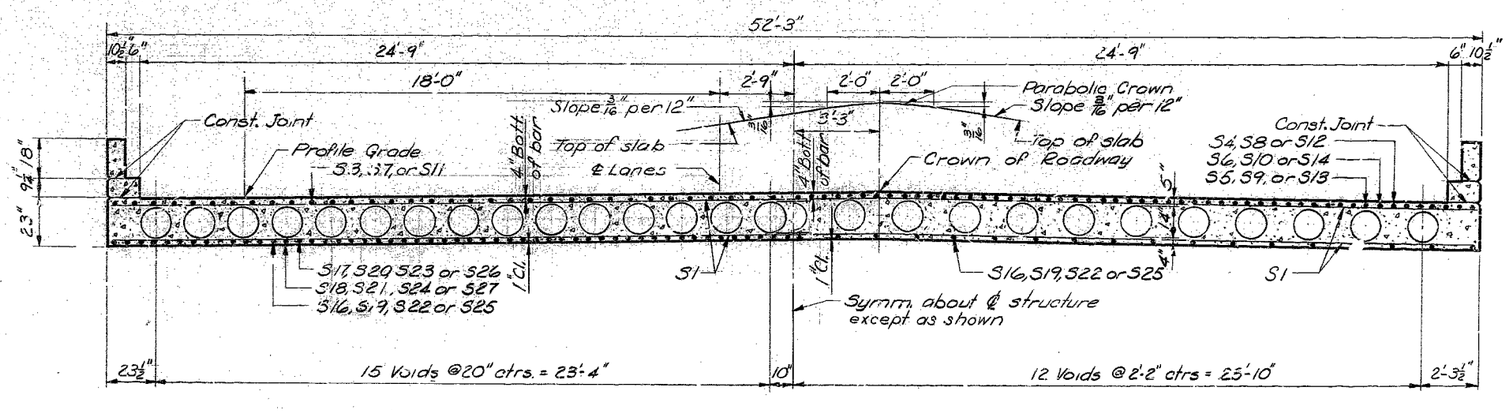

HALF SECTION AT CENTER OF SPAN

HALF SECTION NEAR INT. BENT

WESTBOUND LANES

(Eastbound Lanes opposite hand)

NOTE:
For detail of weephole, construction joint key and Notes see sheet 7 of 8.
Minimum lap for reinforcing steel shall be 24 dia.

BRIDGE OVER HOLMES ROAD

STATE ROAD INTERSTATE ROUTE 435

ABOUT 4 MILES NORTH OF MARTIN CITY

PROJECT NO. I-IG-435-1(53)(RTE. I-435) **STA.** 977+72.9

JACKSON COUNTY

DETAILED SEPT. 1965 BY HERD
CHECKED NOV. 1965 BY R. PARIKH

R. W. BOOKER & ASSOCIATES, INC.
CONSULTING ENGINEERS
215 NORTH ELEVENTH ST.
ST. LOUIS 1, MISSOURI

Note: This drawing is not to scale. Follow dimensions.

Sheet No. 6 of 8.

A-1662

NO CONSTRUCTION CHANGES

489

MISSOURI STATE HIGHWAY DEPARTMENT

FED. ROAD DIST. NO.	STATE	FED. AID PROJ. NO.	FISCAL YEAR	SHEET NO.	TOTAL SHEETS
5	MO.		19	137	

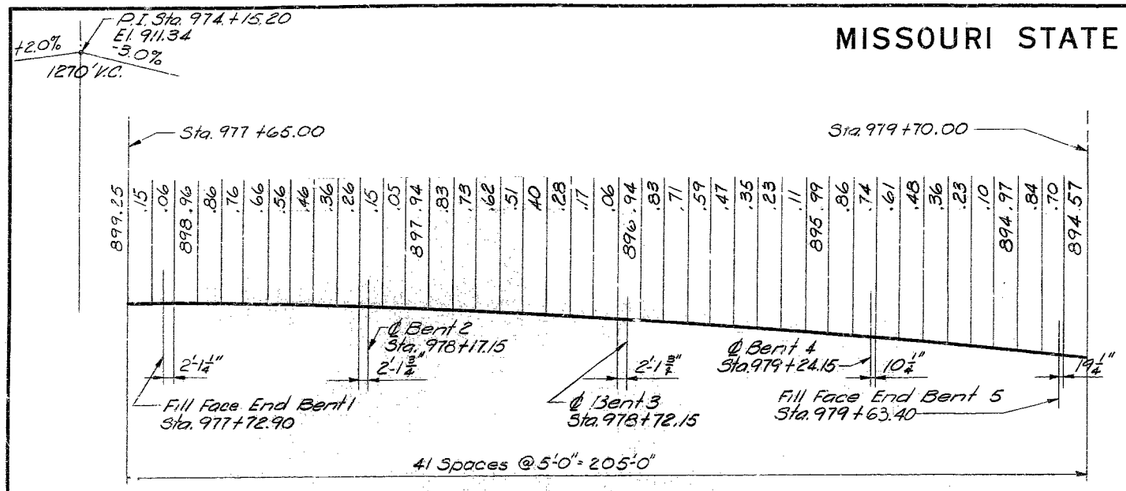

PROFILE GRADE ELEVATIONS

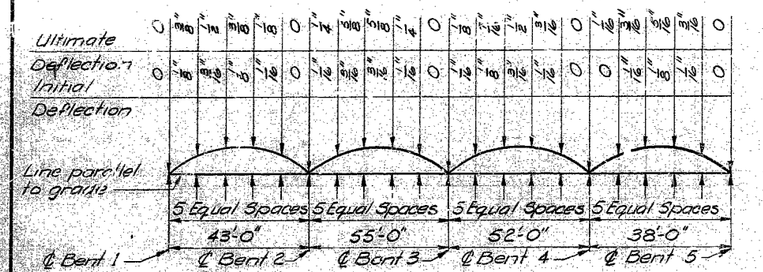

CAMBER DIAGRAM

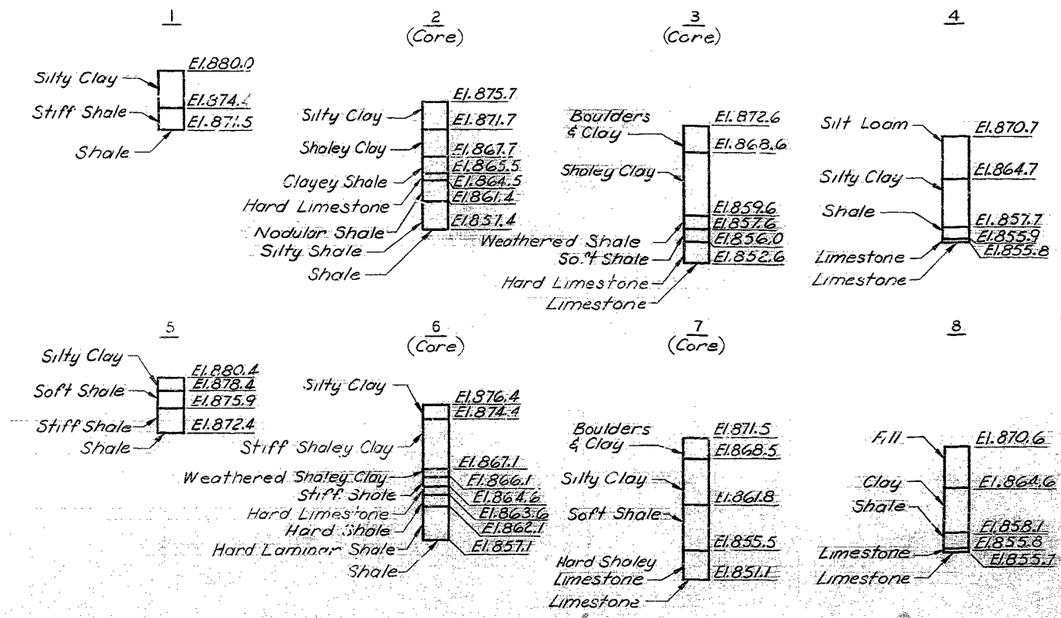

BORING DATA

NOTES:

Core drill equipment: Double Tube Core Bbl.

One $\frac{3}{4}$" ϕ weephole shall be provided near each end of each void. Weepholes shall be placed in straight lines parallel to bents.

Finish each side of joint with $\frac{1}{2}$" radius edging tool and fill flush with joint seal.

Fiber tubes for producing voids shall have an outside diameter of 14.0 and a wall thickness of 0.250 and shall be anchored to joists carrying the floor form at not more than 4'-0" centers. See Special Provisions for metal tube alternate for voids.

The contractor shall use an approved oscillating screed type, self-propelled mechanical finishing machine and shall pour and satisfactorily finish the roadway slab at a rate of not less than 46 cubic yards per hour. He shall observe the transverse construction joints shown on plans unless he can demonstrate to the satisfaction of the engineer that he is equipped to pour and satisfactorily finish the roadway slab at a rate which will permit a continuous pouring through some or all of these joints. Finishing machine load will not be permitted on concrete less than 48 hours old.

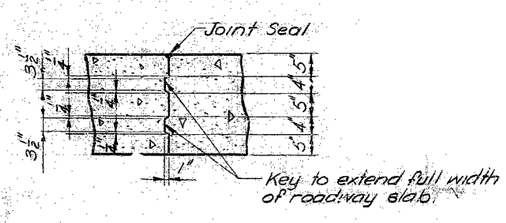

CONST. JOINT KEY

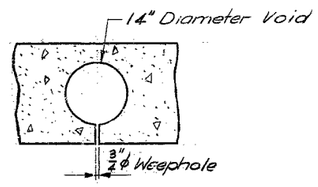

WEEPHOLE DETAIL

BRIDGE OVER HOLMES ROAD

STATE ROAD INTERSTATE ROUTE 435

ABOUT 4 MILES NORTH OF MARTIN CITY

PROJECT NO. I-IG-435-1(53)(RTE. I-435) **STA.** 977+72.9

JACKSON COUNTY

DETAILED SEPT. 1965 BY H.E.R.D.

CHECKED OCT. 1965 BY B. PARIKH

R. W. BOOKER & ASSOCIATES, INC.
CONSULTING ENGINEERS
215 NORTH ELEVENTH ST.
ST. LOUIS 1, MISSOURI

Note: This drawing is not to scale. Follow dimensions.

Sheet No. 7 of 8.

A-1662

NO CONSTRUCTION CHANGES

490

MISSOURI STATE HIGHWAY DEPARTMENT

FED ROAD DIST NO	STATE	FED AID PROJ NO	FISCAL YEAR	SHEET NO	TOTAL SHEETS
5	MO.		19	138	

GENERAL NOTES:

All handrail posts shall be set normal to grade.

Aluminum tube handrail shall be bent to conform to vertical and horizontal alignment of parapet.

Aluminum washer shims between top of parapet and post base may be used for adjusting handrail alignment. Maximum thickness of shims to be 1/8". Where more tilting of post is required for proper alignment, concrete bearing areas shall be ground down.

All parts of handrail, except anchor bolts, nuts, washers, and set screws are to be of aluminum material.

The contract unit price per linear foot of "Bridge Rail" shall include furnishing and erecting the handrail complete with anchor bolts, shims and Insulating compound.

All fillets 1/4" except as noted.

All drafts 5° except as noted.

Pipe rail to be fabricated in two or three panel lengths unless otherwise approved.

Omit set screw on side near filled Joint in parapet at all expansion posts.

Top of curbs and parapets to be built parallel to grade with curb and parapet joints normal to grade.

Concrete end posts to be vertical.

All exposed edges of end posts, parapets and curbs shall have 1/2" radius.

If the contractor desires, he may use drive fit cast aluminum end caps in lieu of welded aluminum closure plates.

Integrally cast test coupons and a coat of clear lacquer specified in Std. Spec. 56.2.4 and 56.3.5 respectively will not be required for these rail posts.

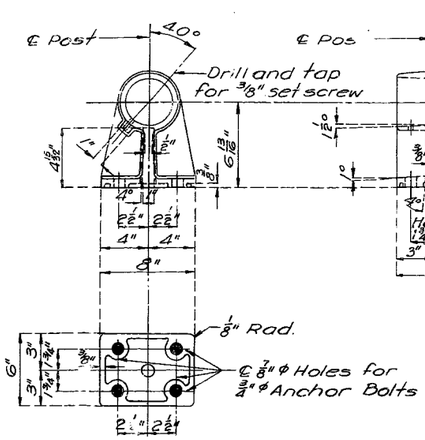

POST DETAILS

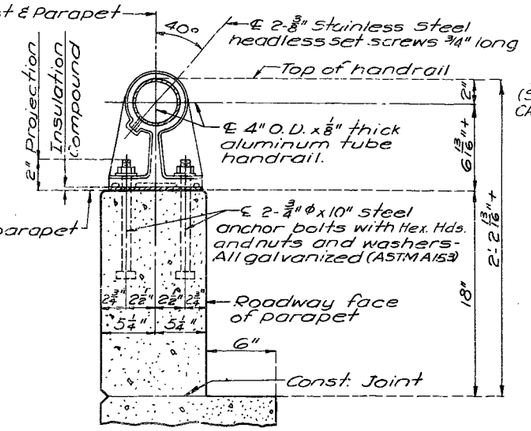

SECTION THRU HANDRAIL

SINGLE TUBE ALUMINUM RAILING

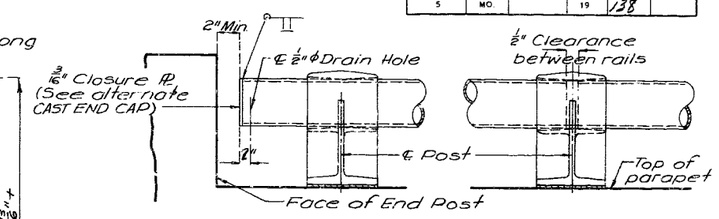

POST

RAIL SPLICE OR EXP.

TYPICAL HANDRAIL DETAILS

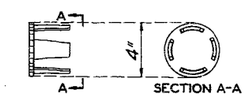

CAST END CAP
(Drive Fit Type)

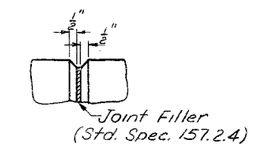

FILLED JOINT DETAILS

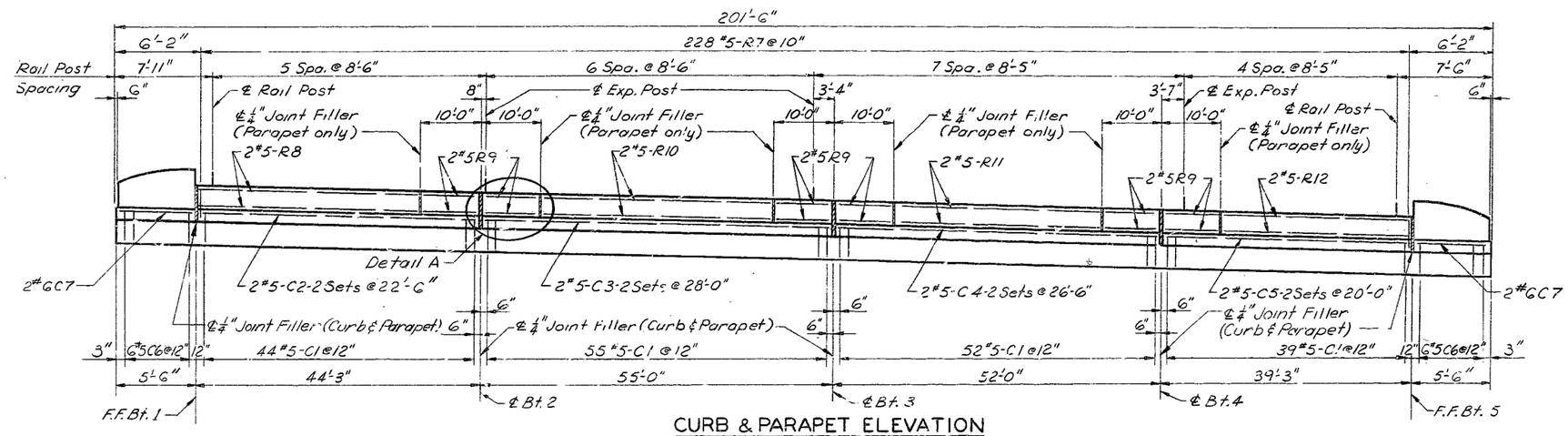

CURB & PARAPET ELEVATION

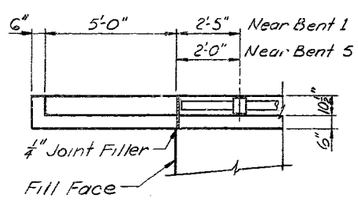

PLAN OF END POST

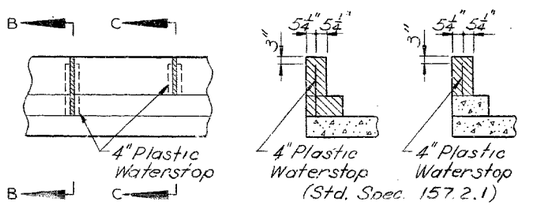

DETAIL A SECTION B-B SECTION C-C

PLASTIC WATERSTOPS

NOTES:
Cost of plastic waterstop complete in place to be included in unit price bid for concrete.
Plastic waterstop shall be placed in all parapet and curb filled joints.

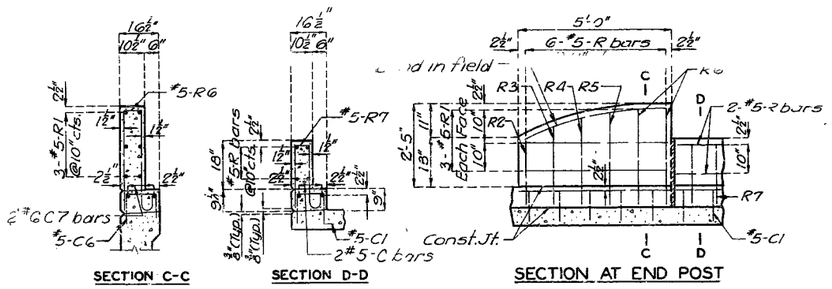

SECTION C-C SECTION D-D SECTION AT END POST

NOTE: For horizontal curb and parapet bars use minimum lap of 15" for #5 and 18" for #6.

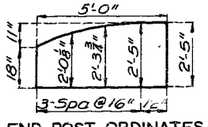

END POST ORDINATES

BRIDGE OVER HOLMES ROAD

STATE ROAD INTERSTATE ROUTE 435

ABOUT 4 MILES NORTH OF MARTIN CITY

PROJECT NO. I-IG-435-1(53)(RTE. I-435) STA. 977+72.9

JACKSON COUNTY

A-1662

No.	Revised
1.5.2	May 1965
Nov. 1965	

DETAILED SEPT. 1965 BY VIEHLAND
CHECKED OCT. 1965 BY P. PARIKH

R. W. BOOKER & ASSOCIATES, INC.
CONSULTING ENGINEERS
715 NORTH ELEVENTH ST.
ST. LOUIS 1, MISSOURI

Note: This drawing is not to scale. Follow dimensions.

Sheet No. 8 of 8.

491

FINAL PLANS

MISSOURI STATE HIGHWAY DEPARTMENT

FINAL PLANS

FED. ROAD DIST. NO.	STATE	FED. AID PROJ. NO.	FISCAL YEAR	SHEET NO.	TOTAL SHEETS
5	MO.		19	131	

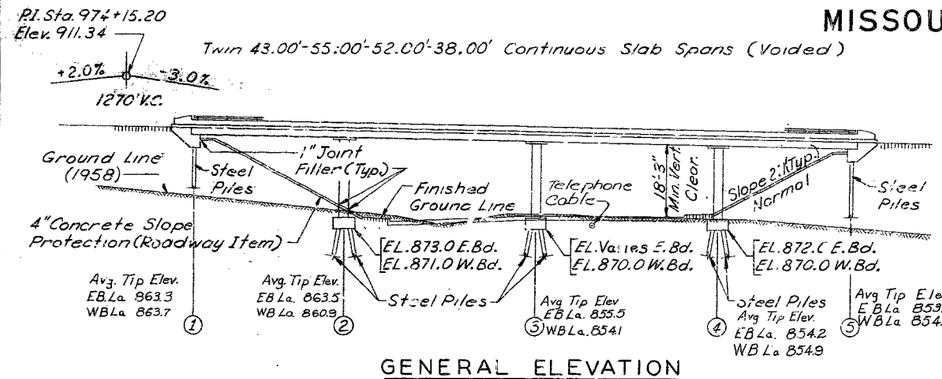

GENERAL ELEVATION

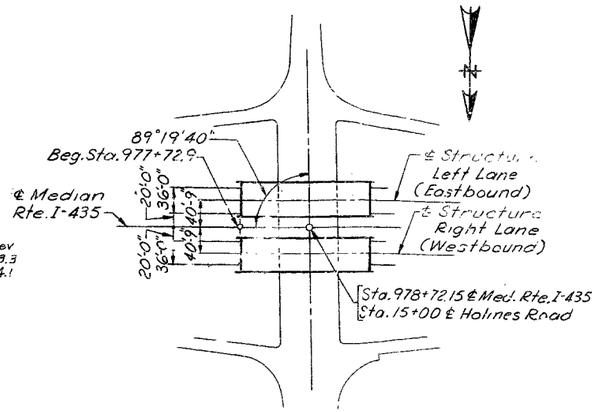

LOCATION SKETCH

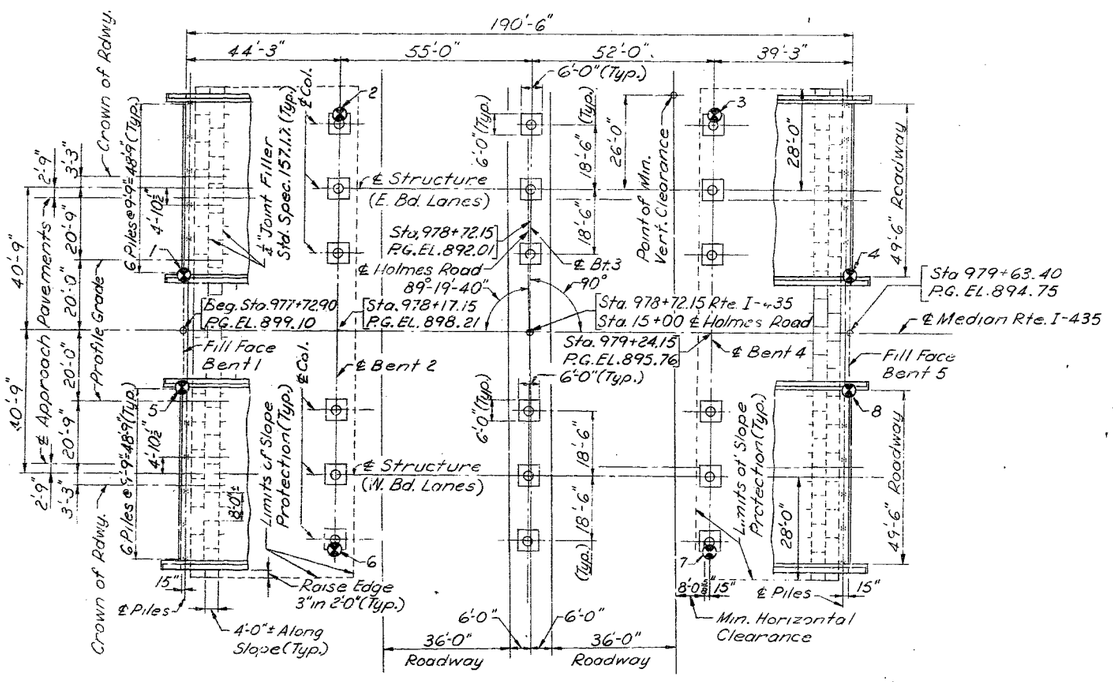

PLAN

GENERAL NOTES:

DESIGN SPECIFICATIONS: A.A.S.H.O. - 1961

DESIGN LOADING:

HS 20-44; 15 #/sq. ft. Future Wearing Surface;
Modified 24,000 # Tandem Axle;
Earth 120#; Equivalent Fluid Pressure 30#.

DESIGN UNIT STRESSES:

Class B Concrete (Substructure) fc = 1,200 p.s.i.
Class B1 Concrete (Superstructure) fc = 1,600 p.s.i.
Reinforcing Steel fs = 20,000 p.s.i.
Steel Pile (A.S.T.M. A36-62T) fb = 9,000 p.s.i.

SURFACE SEAL: Superstructure deck surface sealed.

FALSEWORK:

Falsework over existing lanes constructed with a minimum vertical clearance of 13'-0" from crown of existing lanes and a minimum lateral clearance of 15'-0" centered on By Pass lanes.

QUANTITIES

Item		Substr.	Superstr.	Total
Class 1 Excavation for Structures	Cu. Yd.	246.5	—	246.5
10" Steel Piles in Place	Lin. Ft.	1232	—	1232
10" Steel Pile Cut Offs	Lin. Ft.	146	—	146
12" Steel Piles in Place	Lin. Ft.	629	—	629
12" Steel Pile Cut Offs	Lin. Ft.	211	—	211
Class B Concrete	Cu. Yd.	72.0	—	72.0
Class B1 Concrete	Cu. Yd.	—	1346.3	1346.3
Reinforcing Steel	Lb.	2000	314860	316,860
Bridge Rail (Single Tube Type)	Lin. Ft.	—	761	761
Cont. ITEMS: Bridge Anchors 6" Curb	Each		5	5
Class 1 +25%	Cu. Yd.	4.5		4.5

Note: No payment for excavation allowed at End Bents No. 1 & 5.
Excavation for Bents No. 2 & 4 paid for from the finished ground line.
All concrete and reinforcement above footings included in superstructure quantities

PILE DATA

BENT NO.		1		2		3		4		5	
LANE		E.Bd.	W.Bd.	E.Bd.	W.Bd.	E.Bd.	W.Bd.	E.Bd.	W.Bd.	E.Bd.	W.Bd.
Pile Type and Size		10 BP 42		12 BP 53		12 BP 53		10 BP 42		10 BP 42	
Number		6	6	12	12	12	12	12	12	6	6
Approximate Length	Ft.	25	30	15	15	20	20	20	20	40	40
Design Bearing Value	Ton	38	38	57	57	57	57	54	54	38	38
* Hammer Energy Req'd.	Ft. Lbs	8500	8500	18200	18200	18200	18200	18100	18100	8500	8500

PILE NOTES:

All pile driven to practical refusal at 1.9 times the design bearing value.

* Minimum Energy Requirement of hammer based on plan length and design bearing value of pile.

Note. For location of existing utility conduits see Road Plans.

Compacted roadway fill (full roadway width) placed up to elevation of bottom of concrete beam in front of and not less than 25'-0" in back of End Bents before steel piles driven.

BORING DATA:

For Boring Data see Sheet No. 7 of 8.
"⊗" Indicates location of boring.

BENCH MARK:

B.M. PK Nail in Rt. Wing of Rt. La. Bent No. 1
Elev. 900.04

492

DESIGNED OCT. 1965 BY J. PARIKH
DETAILED OCT. 1965 BY VIEHLAND
CHECKED NOV. 1965 BY MISSLER

R. W. BOOKER & ASSOCIATES, INC.
CONSULTING ENGINEERS
215 NORTH ELEVENTH ST.
ST. LOUIS 1, MISSOURI

Note: This drawing is not to scale. Follow dimensions.

STATE OF MISSOURI EUGENE E. FIELDHAMMER NUMBER E-10795 REGISTERED PROFESSIONAL ENGINEER

SUBMITTED BY

REGISTERED PROFESSIONAL ENGINEER
MISSOURI NO. E-10795

Sheet No. 1A of 1.

BRIDGE OVER HOLMES ROAD

STATE ROAD INTERSTATE ROUTE 435

ABOUT 4 MILES NORTH OF MARTIN CITY FINISHED

PROJECT NO. I-IG-435-(53)(RTE. I-435) **STA.** 977+72.91

JACKSON COUNTY

FINISHED FINISHED FINISHED

SUBMITTED BY ..... BRIDGE ENGINEER ..... DATE 5/20/66

APPROVED BY ..... CHIEF ENGINEER ..... DATE 5/20/66

STD. 54.00

A-1662

PLANS

253

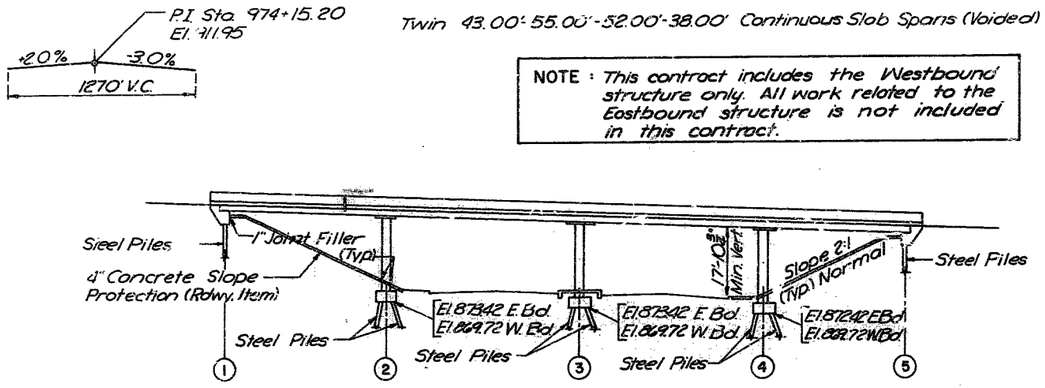

GENERAL ELEVATION
(Scale: 1" = 20')

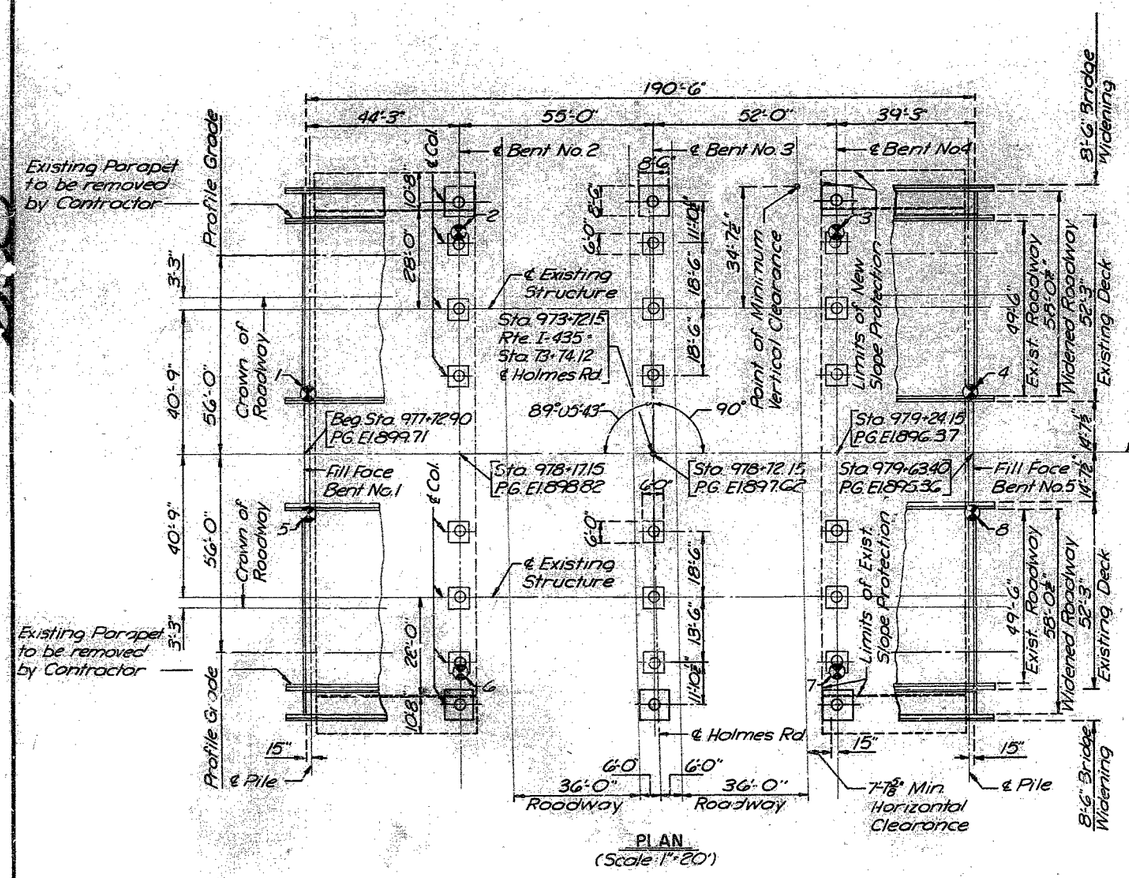

PLAN
(Scale: 1" = 20')

GENERAL NOTES

Design Specifications:
A.A.S.H.T.O.-1977, Interim '78, '79, '80, '81
Working Stress Design

Design Loading:
HS20-44 / 15#/sq.ft. Future Wearing Surface
Modified 24,000# Tandem Axle
Earth 120#, Equivalent Fluid Pressure 30#

Design Unit Stresses:
Class B1 Concrete (substructure & barrier curb) f'_c = 4,000 p.s.i.
Class B2 Concrete (deck slab) f'_c = 4,000 p.s.i.
Reinforcing Steel (Grade 60) f_y = 60,000 p.s.i.
Steel Pile f_b = 9,000 p.s.i.

Boring Data:
For Boring Data see Boring Data and Estimated Quantities Sheet
"⊗" indicates location of boring.

Bench Mark:
Elev. 192.77 Kansas City, Missouri Standard
Horizontal Control Monument #199 = Elev. 915.07 U.S.G.S. Datum.
Plan Elevations shown are U.S.G.S. Datum.

Removal of Existing Structure:
Outline of old work is indicated by light dashed lines on the detail sheets. Heavy lines indicate new work. Removal Limits of existing structure are shown in crosshatching. After removing existing barrier curb, saw cut slab 2" deep along a line 16½" from the outside of the deck. The contractor shall leave all existing deck reinforcement in place.

Excavation:
Pay limits for excavation quantities are measured from the existing ground line.

Reinforcing Steel:
Minimum clearance to reinforcing steel shall be 1½" unless otherwise noted.

Concrete Voided Slab:
The contractor shall pour and satisfactorily finish the concrete roadway slab at a rate of not less than 25 cubic yards per hour.
If the contractor cannot place the slab in one continuous pour, construction joints shall be placed at locations as approved by the Engineer.
Finish each side of the optional joint with ¼" edging tool.
Tubes for producing voids shall have an outside diameter of 14.0" and shall be anchored at not more than 4'-0" centers. Fiber tubes shall have a wall thickness of not less than 0.250".
One ⅜"ø weephole shall be provided near the ends of each void. Weepholes shall be placed in straight lines parallel to bent.
The cross-slope and elevation of the 23" uniform slab shall be varied as required to match the existing slab and provide a uniform wearing surface across the junction of the new and existing slabs. The thickness of the new drop panel may vary as required by maintaining the top of column elevation as shown on the plans and providing the necessary drop panel thickness to accommodate the resulting bottom of new deck elevation.

Construction Specifications:
Current issue of Missouri Standard Specifications for Highway Construction.

Safety Barrier Curb:
Top of safety barrier curb shall be built parallel to grade with barrier curb joints normal to grade.
All exposed edges of safety barrier curb shall have ⅜" radius or ¾" bevel unless otherwise noted.
Plastic waterstop shall be placed in all safety barrier curb filled joints.
Cost of plastic waterstop complete in place shall be included in the bid price for concrete.

Surface Seal:
Superstructure deck surface shall be sealed in accordance with Section 103.3.18 of the Standard Specifications.
Surface to be sealed also includes the area under the existing parapet and curb that is to be replaced.

Traffic Maintained:
Traffic over structure to be maintained during construction.

Falsework:
Falsework over existing lanes should be constructed with a minimum vertical clearance of 14' from crown of existing lanes and a minimum lateral clearance of 2 feet beyond edge of pavement.

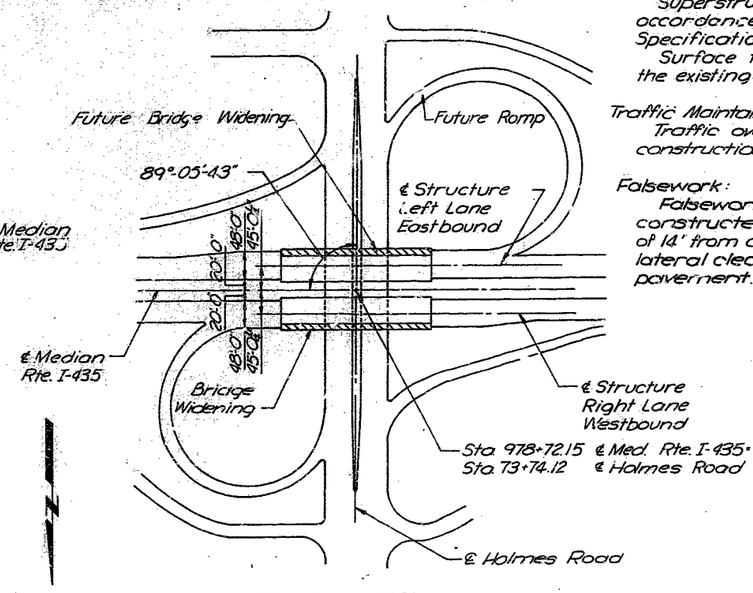

LOCATION SKETCH
(No Scale)

BRIDGE OVER HOLMES ROAD

STATE ROAD FROM KANSAS STATE LINE TO RTE. 71
ABOUT 1.4 MILES EAST OF KANSAS STATE LINE
PROJECT NO. IR-435-1(202) STA. 977 +72.90
JOB NO. 4-I435-691B RTE. I-435
JACKSON COUNTY
DATE March 29, 1984

A-1662R

JACKSON COUNTY, MISSOURI

GENERAL PLAN AND ELEVATION
Project IR-435-1(202) Job # 4-I-435 (691B)

HOLMES ROAD — BRIDGE NO. A-1662R

BUCKNER & WILLIS
CONSULTING ENGINEERS, PLANNERS, & ARCHITECTS
SALINA HAYS KANSAS CITY

MADE S.D.C. DATE 2-15-83 TRACED D.A.C. DATE 2-16-83
CHECKED S.A.C. DATE 2-18-83 SCALE As Noted

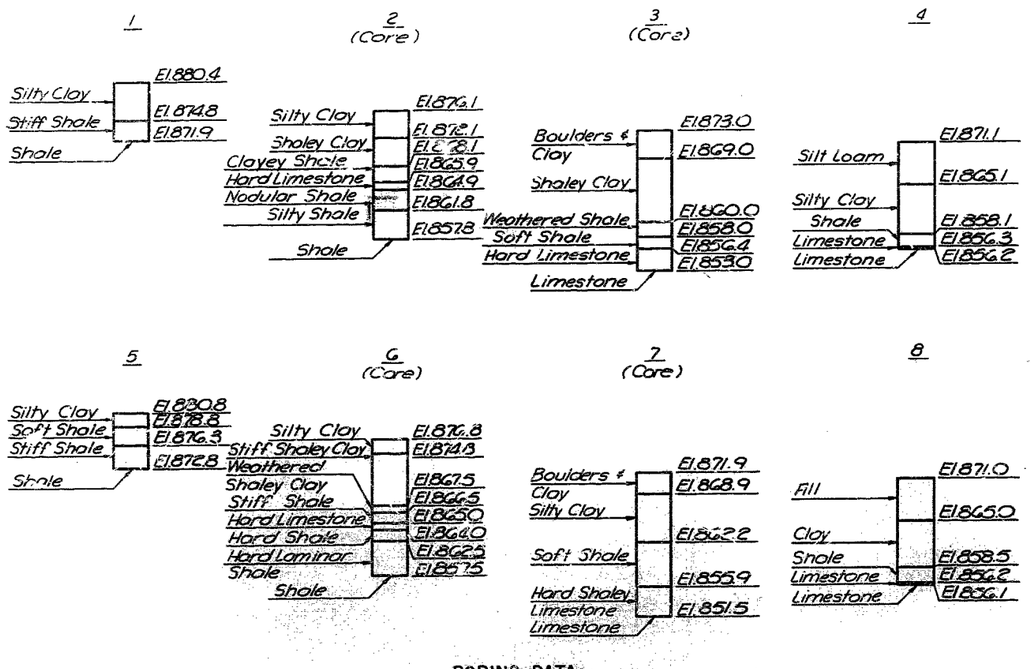

BORING DATA

Note: For location of Borings see General Plan & Elevation Sheet

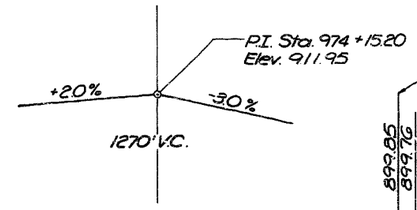

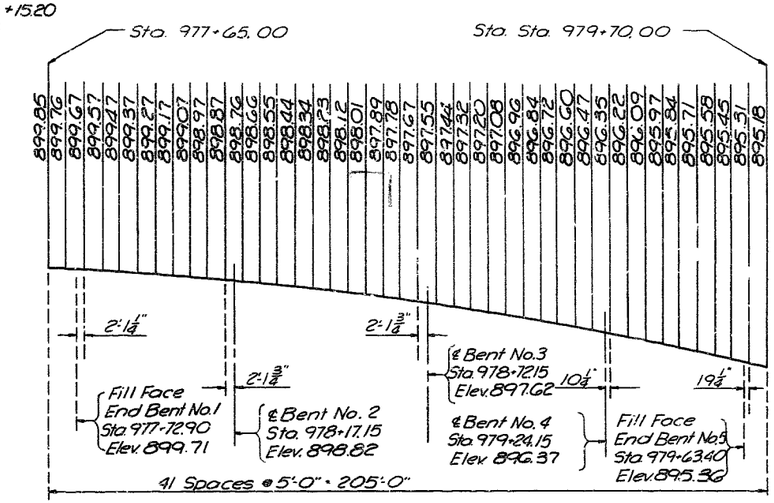

PROFILE GRADE ELEVATIONS

Note: The profile grade shown is the theoretical profile grade of I-435 as obtained from the original construction plans. These elevations should not be used for construction as the existing elevations do not agree with this profile.

NOTE: This contact includes the Westbound structure only. All work relating to the Eastbound structure is not included in this contract.

* Removal of Concrete shall include detailed removal of existing wings, curbs, parapets, slab, and other areas as [illegible]ed by the engineer. Removal and placement of concrete for full depth repair and half-soling shall be included in contract unit price bid for these items.

PILE DATA

BENT NO.		END BENT NO.1		INT. BENT NO.2		INT. BENT NO.3		INT. BENT NO.4		END BENT NO.5	
LANE		E.Bd	W.Bd	E.Bd	W.Bd	E.Bd	W.Bd	E.Bd	W.Bd	E.Bd	W.Bd
Pile Type and Size		HP10×42		HP10×42		HP10×42		HP10×42		HP10×42	
Number		2	2	4	4	4	4	4	4	2	2
Approximate Length	Ft.	33	33	12	12	19	19	19	19	39	39
Design Bearing	Tons	29	29	66	48	48	48	66	66	29	29
Hammer Energy Reqd.	Ft.Lbs	7000	7000	14900	14900	10800	10800	14900	14900	7000	7000

Note: Minimum energy requirement of the hammer based on plan length and design bearing value of the piles.
All piles shall be driven to practical refusal.

ESTIMATED QUANTITIES

ITEM		EASTBOUND	WESTBOUND	TOTAL
Removal & Replacement of Det. Conc.	Sq. Ft.	22	17	39
* Removal of Concrete	Cu. Yd.	23.4	23.4	46.8
Class I Excavation	Cu. Yd.	71.0	78.0	149.0
Structural Steel Pile (10")	Lin. Ft.	344	344	688
Class B1 Concrete	Cu. Yd.	59.5	61.3	120.8
Class B2 Concrete	Cu. Yd.	100.0	100.0	200.0
Elastomeric Expansion Joint Seal	Lin. Ft.	191	191	382
Reinforcing Steel (Grade 60)	Lbs.	19,800	20,360	40,160
Reinforcing Steel (Gr. 60) Epoxy Coated	Lbs.	14,610	14,610	29,220
Epoxy Resin Crack Repair	Lin. Ft.	13	10	23
Full Depth Repair	Sq. Ft.		94	94
Repairing Conc. Deck (Half-soling)	Sq. Ft.		189	189
Low Slump Conc. Wearing Surface	Sq. Yd.		104.8	104.8

JACKSON COUNTY, MISSOURI

BORING DATA AND ESTIMATED QUANTITIES

HOLMES ROAD — BRIDGE NO. A-1662R

BUCHER & WILLIS
CONSULTING ENGINEERS, PLANNERS, & ARCHITECTS
SALINA — HAYS — KANSAS CITY

MADE S.A.C. DATE 2-15-83 TRACED D.A.C. DATE 2-16-83
CHECKED S.K.H. DATE 2-16-83 SCALE No Scale

254

Sheet 30

FED. RDWY DIST. NO.	STATE	FED. AID PROJ. NO.	FISCAL YEAR	SHEET NO.	TOTAL SHEETS
5	MO.		19		

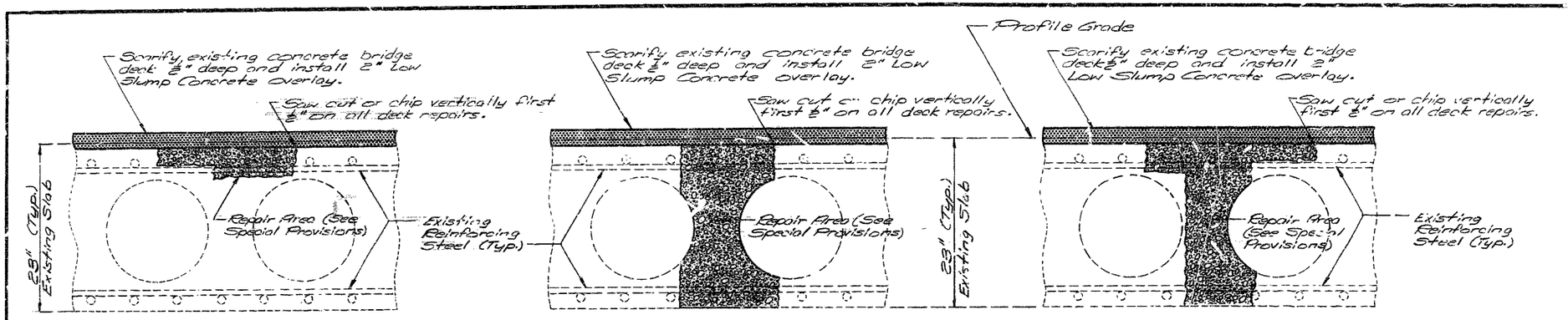

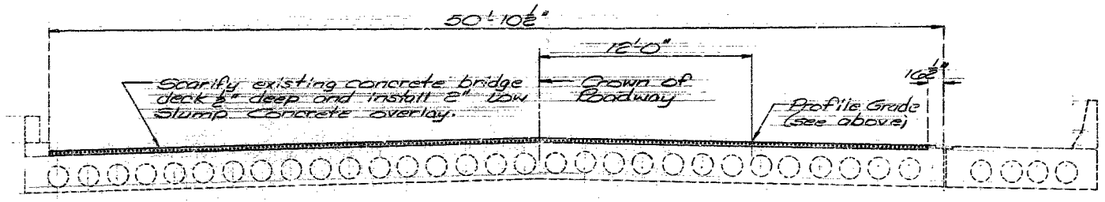

SECTION THRU SLAB

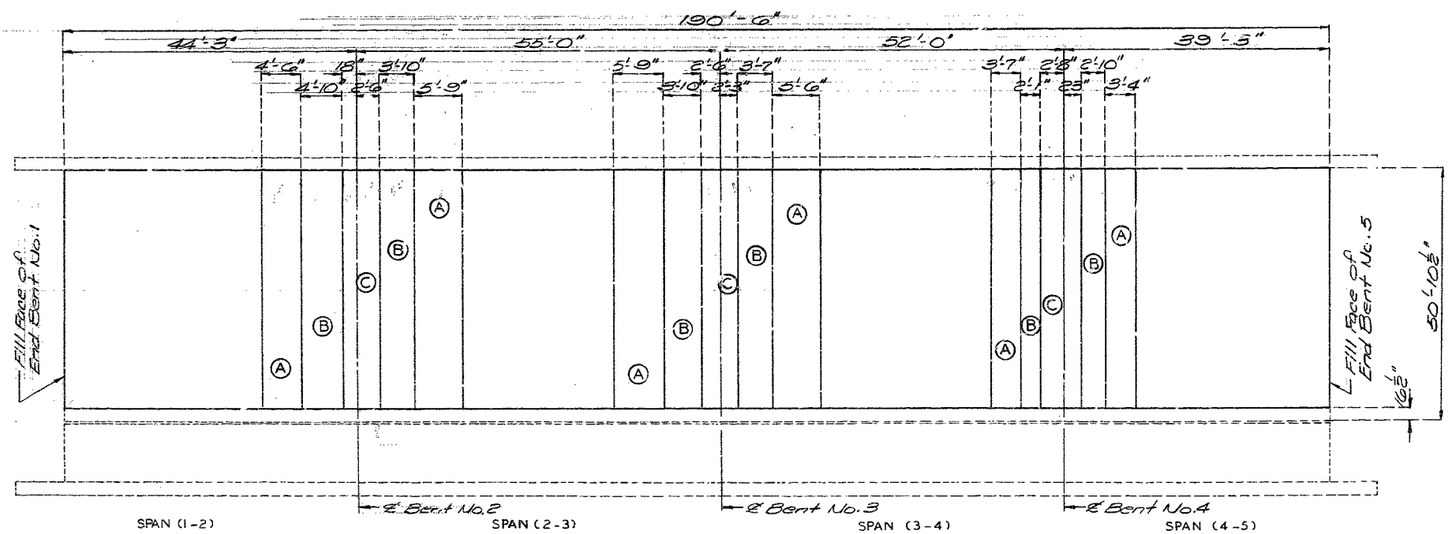

PLAN

Note: Any concrete removal for half-sole repair or full-depth repair in areas designated "A", "B" or "C" shall be repaired in alphabetical order. (See Special Provisions)

JOB NO. 4-I435-691

SPECIAL REPAIR AREAS

DETAILED March 19 84
CHECKED March 19 84

Note: This drawing is not to scale. Follow dimensions.

Sheet No. 30

Sheet 3 of 10 JACKSON COUNTY

A-1662R

255

NOTE: This contract includes the Westbound structure only. All work relating to the Eastbound structure is not included in this contract.

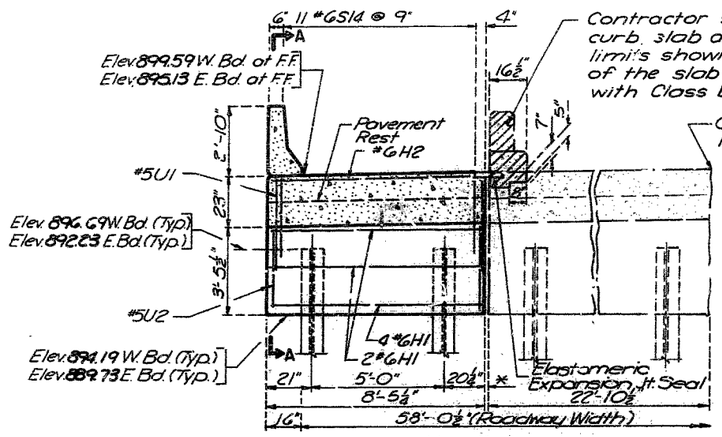

ELEVATION

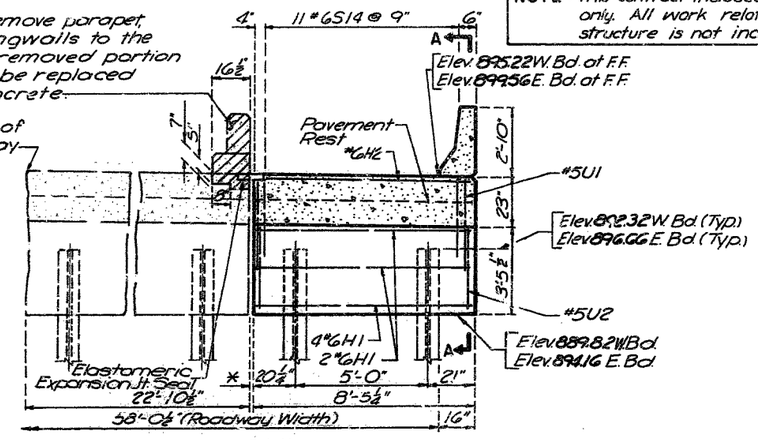

ELEVATION

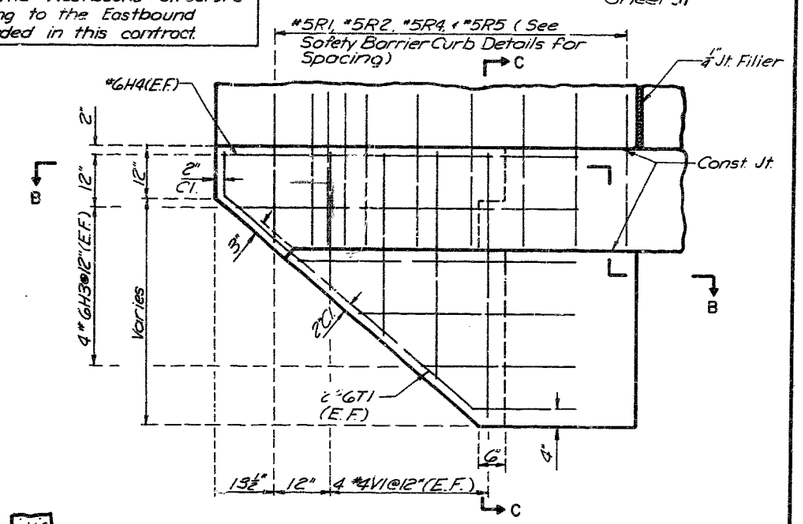

ELEVATION OF WING
(Scale: 3/4" = 1'-0")

* Place a 3/4" joint filler (Standard Specification 1057.24) between old and new concrete in the end bents. This material shall not be paid for directly but shall be considered subsidiary to other items.

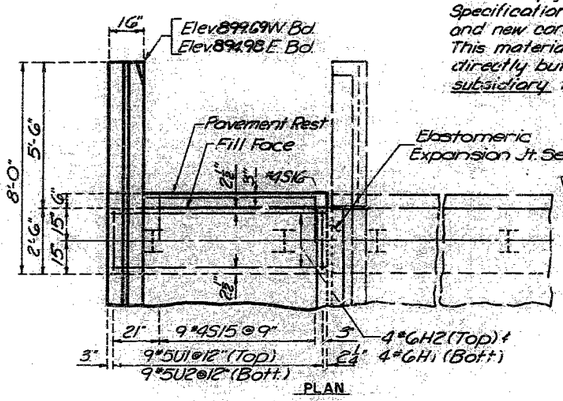

PLAN

WESTBOUND END BENT NO. 1
EASTBOUND END BENT NO. 5
(Scale: 3/8" = 1'-0")

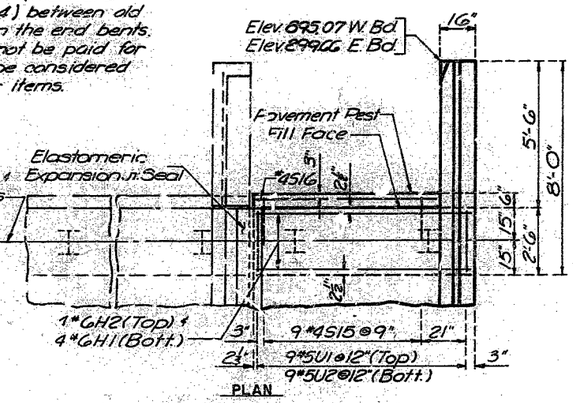

PLAN

WESTBOUND END BENT NO. 5
EASTBOUND END BENT NO. 1
(Scale: 3/8" = 1'-0")

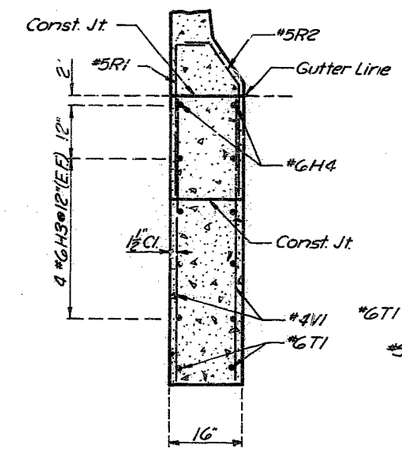

SECTION C-C
(Scale: 3/8" = 1'-0")

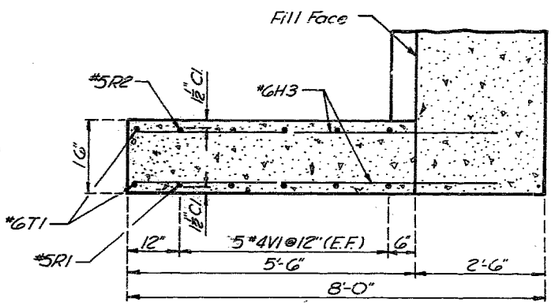

SECTION B-B
(Scale: 3/8" = 1'-0")

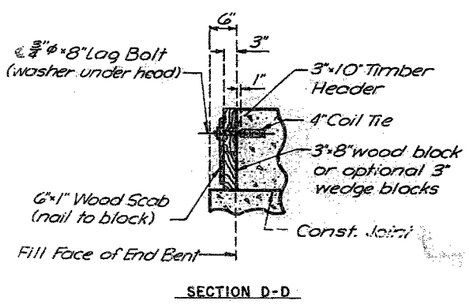

SECTION D-D

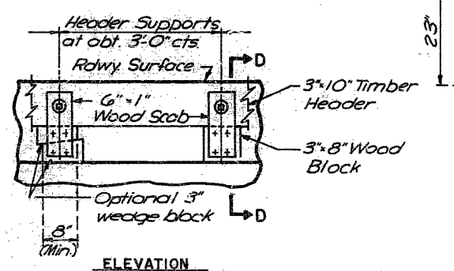

ELEVATION

TIMBER HEADER
(No Scale)

Note: Cost of timber headers complete in place shall be included in the bid price for concrete.

EPOXY RESIN CRACK REPAIR		
LOCATION	DESCRIPTION	QTY. (L.F.)
Bent No. 5 W. Bd. Br.	1 @ 4'-0" North Face	4
TOTAL		4

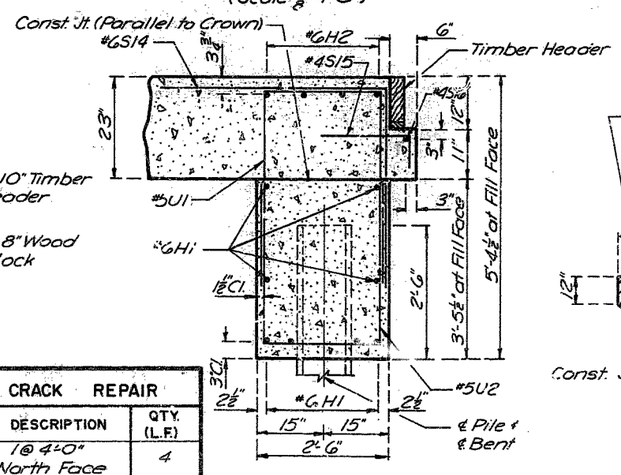

SECTION A-A
(Scale: 3/4" = 1'-0")

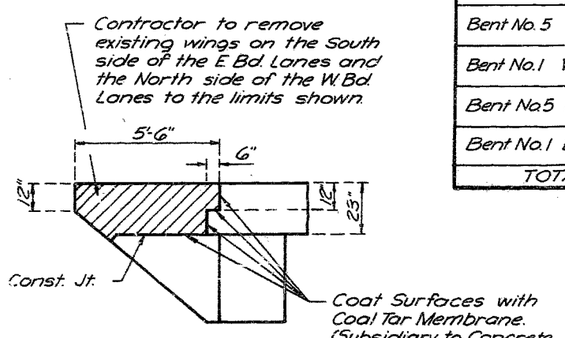

WINGWALL REMOVAL
(Scale: 3/8" = 1'-0")

REMOVAL AND REPLACEMENT OF DETERIORATED CONCRETE		
LOCATION	DESCRIPTION	QUANTITY (S.F.)
Bent No. 5 W. Bd. Br.	2'-0" × 18" South Face	3.0
Bent No. 1 W. Bd. Br.	2'-0" × 4'-0" South Face 12" × 12" North Face	9.0
Bent No. 5 E. Bd. Br.	4'-0" × 16" South Face 20" × 20" North Face	8.1
Bent No. 1 E. Bd. Br.	2'-0" × 3'-0" South Face 2'-3" × 2'-6" North Face	10.6
TOTAL		30.7

JACKSON COUNTY, MISSOURI

END BENTS NO. 1 AND NO. 5 DETAILS

HOLMES ROAD — BRIDGE NO. A-1662R

BUCHER & WILLIS
CONSULTING ENGINEERS, PLANNERS, & ARCHITECTS
SALINA — HAYS — KANSAS CITY

MADE D.A.C. DATE 2-15-83 TRACED D.A.C. DATE 2-16-83
CHECKED S.A.C. DATE 2-18-83 SCALE As Noted

256

Note: Dimensions pertaining to column heights & reinforcement are taken at the ℄ of the column.

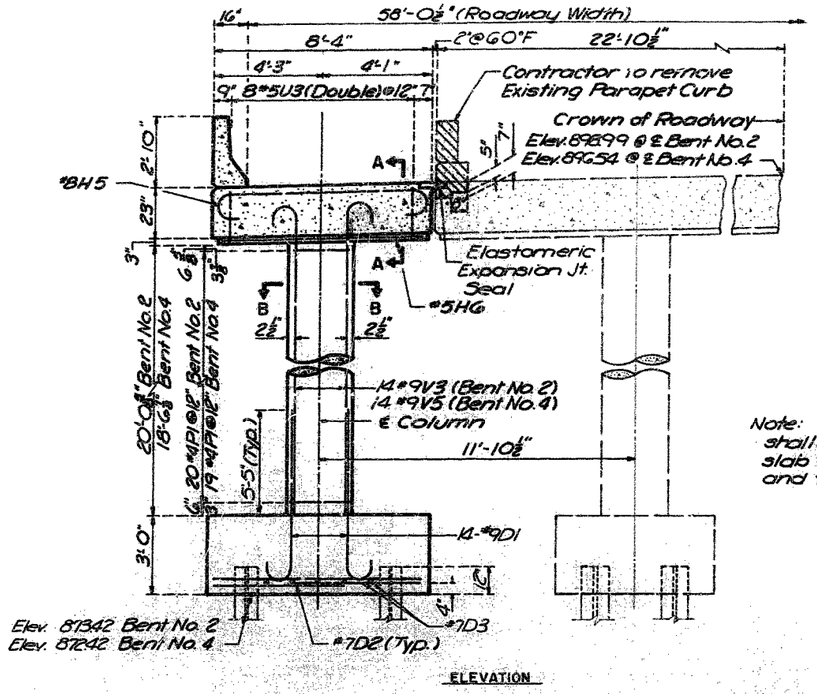

ELEVATION

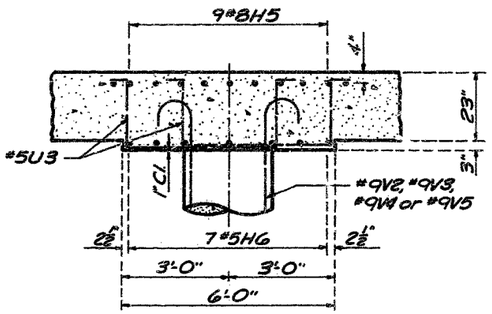

SECTION A-A
(Scale: ⅛" = 1'-0")

Note: Bottom of drop panel shall be parallel to top of slab both longitudinally and transversely.

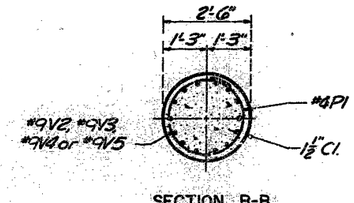

SECTION B-B
(Scale: ⅛" = 1'-0")

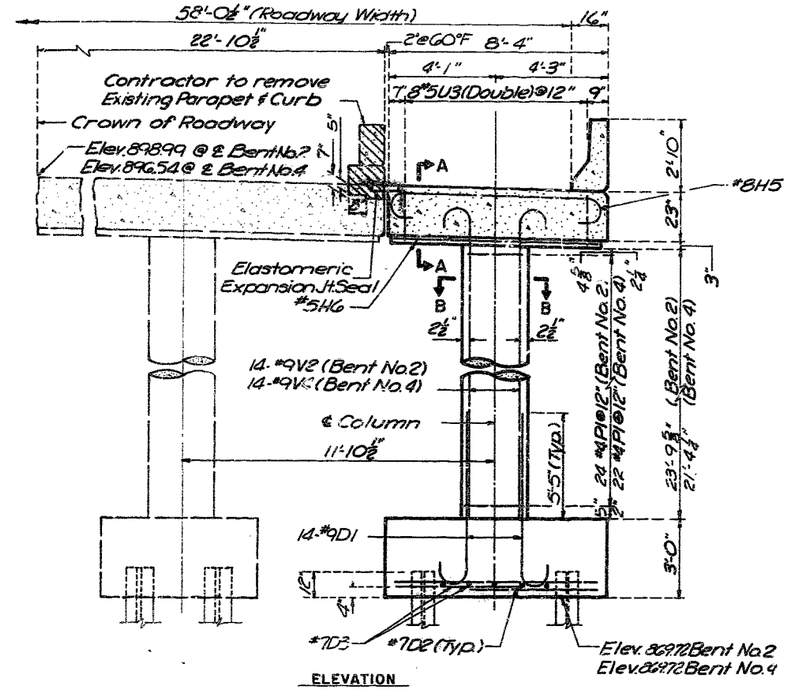

ELEVATION

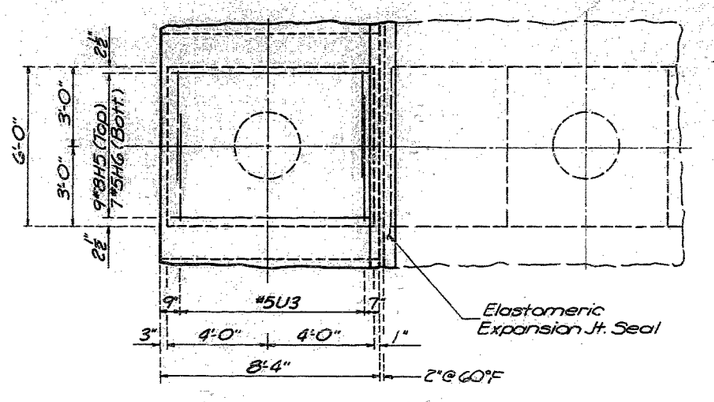

PLAN

EASTBOUND LANES
(Scale: ⅜" = 1'-0")

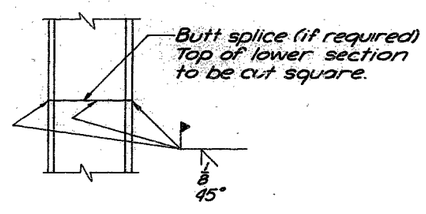

STEEL PILE SPLICE
(No Scale)

Note: For Pile Cap Plan see Intermediate Bent No. 3 Detail Sheet.

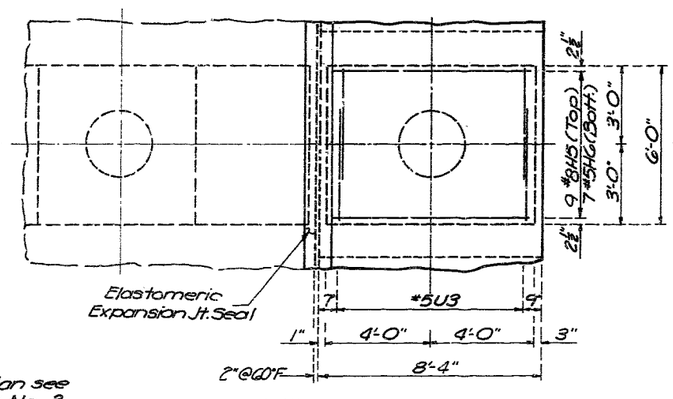

PLAN

WESTBOUND LANES
(Scale: ⅜" = 1'-0")

REMOVAL AND REPLACEMENT OF DETERIORATED CONCRETE			
LOCATION	DESCRIPTION		QUANTITY (S.F.)
Bent No. 2 E. Bd. Br.	6" × 3'-0"	South Face	1.5
Bent No. 2 W. Bd. Br.	12" × 12"	South Face	1.0
TOTAL			2.5

EPOXY RESIN CRACK REPAIR			
LOCATION	DESCRIPTION		QTY. (L.F.)
Bent No. 4 W. Bd. Br.	1 @ 3'-0"	South Face	3
Bent No. 2 W. Bd. Br.	1 @ 18"	South Face	3
	1 @ 12"	North Face	
Bent No. 4 E. Bd. Br.	1 @ 12"	South Face	2
	1 @ 12"	North Face	
Bent No. 2 E. Bd. Br.	1 @ 12"	South Face	6
	1 @ 4'-6"	North Face	
TOTAL			14

NOTE: This contract includes the Westbound structure only. All work relating to the Eastbound structure is not included in this contract.

JACKSON COUNTY, MISSOURI

INTERMEDIATE BENTS NO. 2 AND NO. 4 DETAILS

HOLMES ROAD — BRIDGE NO. A-1662R

BUCHER & WILLIS
CONSULTING ENGINEERS, PLANNERS, & ARCHITECTS
SALINA — HAYS — KANSAS CITY

MADE S.K.H. DATE 2-15-83 TRACED D.M.B. DATE 2-16-83
CHECKED S.A.C. DATE 2-18-83 SCALE As Noted

NOTE: This contract includes the Westbound structure only. All work relating to the Eastbound structure is not included in this contract.

Note: Dimensions pertaining to column heights & reinforcement are taken at the ℄ of the column.

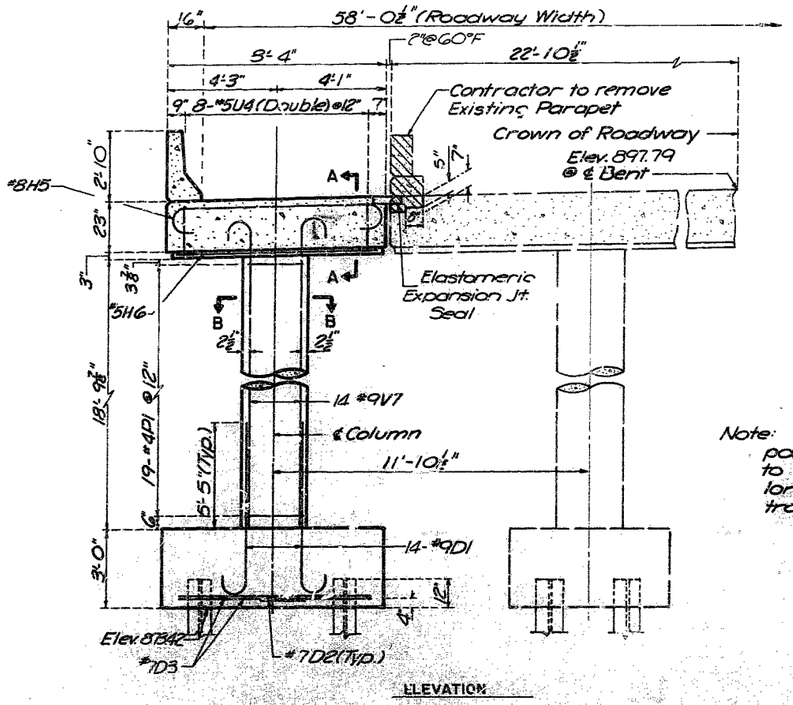

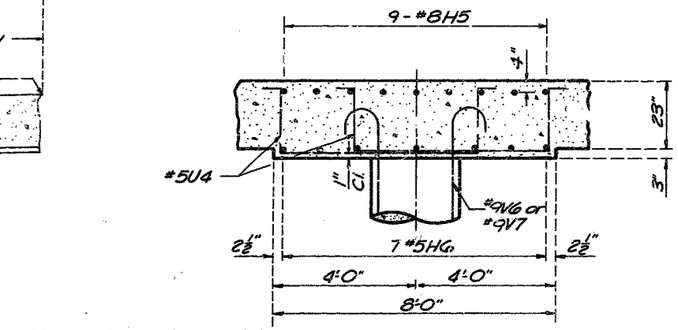

SECTION A-A
(Scale: ½" = 1'-0")

Note: Bottom of drop panel shall be parallel to top of slab both longitudinally and transversely.

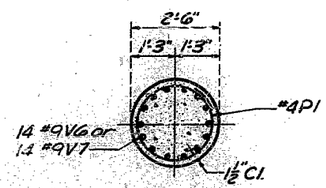

SECTION B-B
(Scale: ½" = 1'-0")

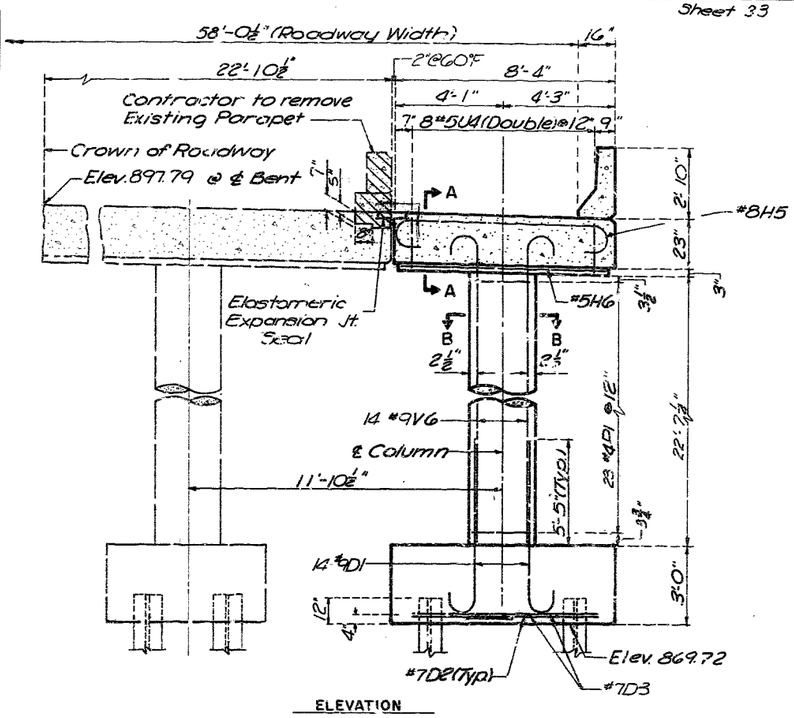

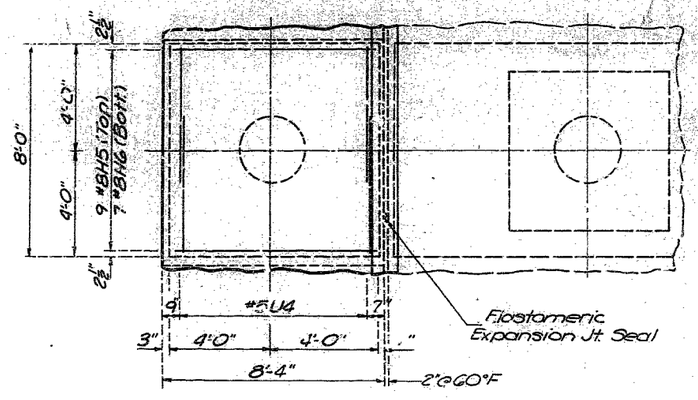

EASTBOUND BENT NO. 3
(Scale: ⅜" = 1'-0")

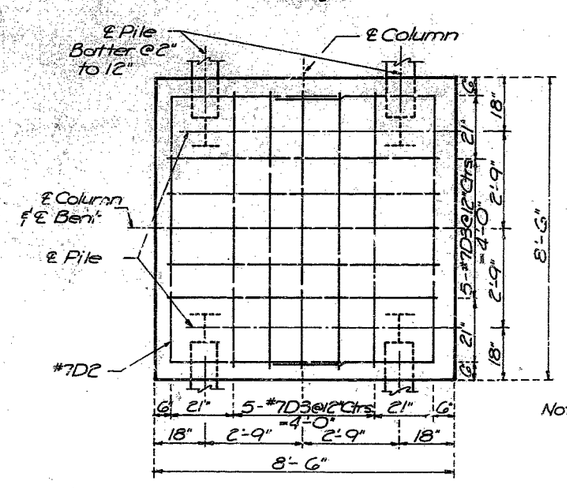

PILE CAP PLAN
(Scale: ½" = 1'-0")

Note: For Steel Pile Splice see Intermediate Bents No. 2 & No. 4 Detail Sheet.

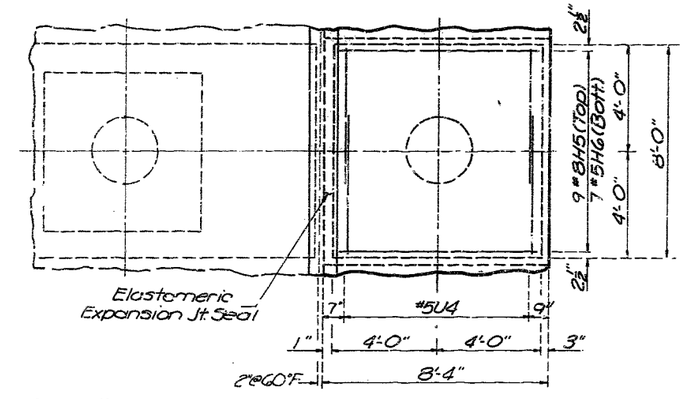

WESTBOUND BENT NO. 3
(Scale: ⅜" = 1'-0")

REMOVAL AND REPLACEMENT OF DETERIORATED CONCRETE			
LOCATION	DESCRIPTION		QUANTITY (S.F.)
Bent No. 3 W. Bd. Br.	18" × 2'-0" 16" × 8"	South Face North Face	3.9
Bent No. 3 E. Bd. Br.	4'-0" × 6"	South Face	2.0
TOTAL			5.9

EPOXY RESIN CRACK REPAIR		
LOCATION	DESCRIPTION	QTY. (L.F.)
Bent No. 3 Eastbound Br.	1 @ 5'-0" North Face	5
TOTAL		5

JACKSON COUNTY, MISSOURI

INTERMEDIATE BENT NO. 3 DETAILS

HOLMES ROAD — BRIDGE NO. A-1662R

BOSHER & WILLIS
CONSULTING ENGINEERS, PLANNERS, & ARCHITECTS
SALINA — HAYS — KANSAS CITY

MADE SKH DATE 2-15-83 TRACED DMB DATE 2-16-83
CHECKED S.A.C. DATE 2-18-83 SCALE As Noted

258

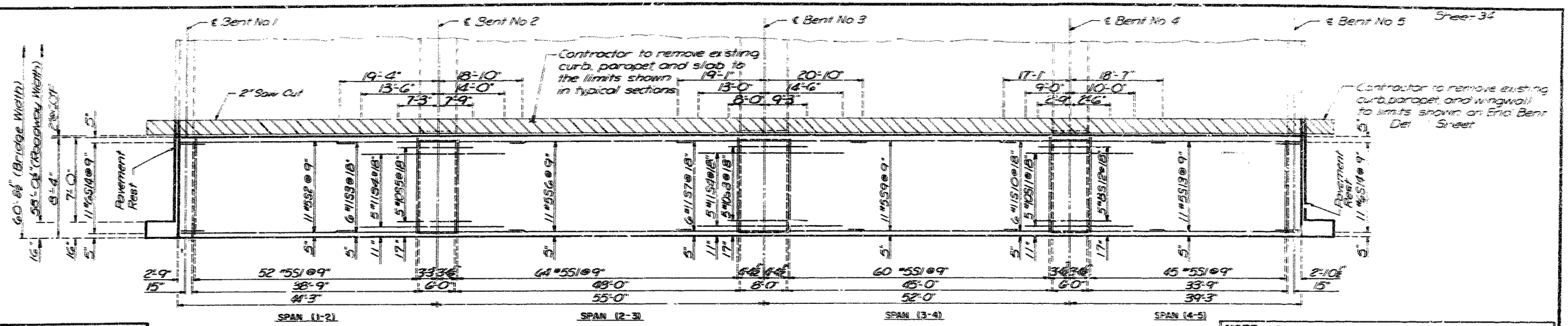

SLAB PLAN SHOWING TOP REINFORCING STEEL
(No Scale)

MINIMUM BAR LAPS		
SIZE	TOP BAR	OTHER THAN TOP BAR
#5	2'-5"	2'-2"
#7		2'-7"
#8		3'-5"
#9		3'-3"
#10		4'-1"
#11		5'-1"

NOTE: This contract includes the Westbound structure only. All work relating to the Eastbound structure is not included in this contract.

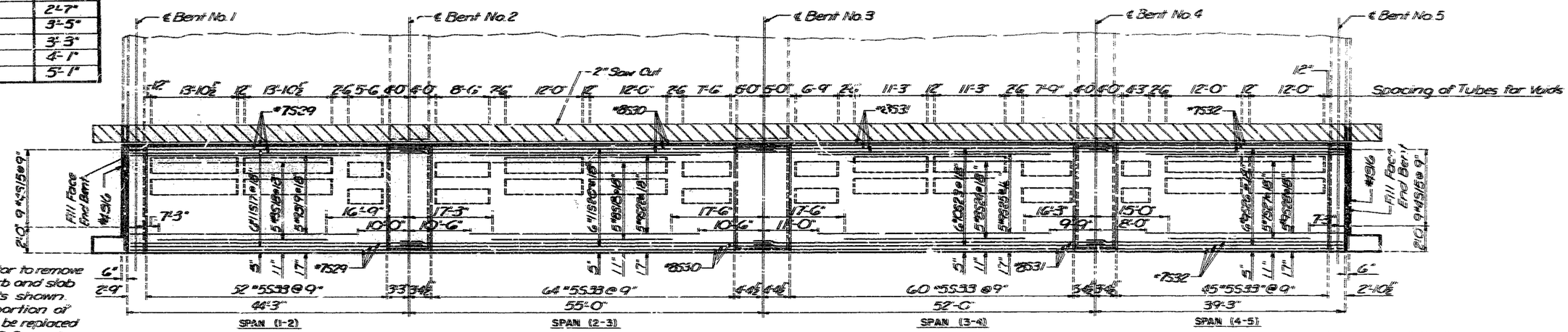

Note: Contractor to remove parapet curb and slab to the limits shown. Removed portion of slab shall be replaced as Class B2 Concrete.

SLAB PLAN SHOWING BOTTOM REINFORCING STEEL
(No Scale)

Note: For detail of weephole and optional construction joint see Safety Barrier Curb and Misc. Details Sheet.
For slab notes see General Plan & Elevation Sheet.
Steel shown for westbound lane. Steel for eastbound lane will be reflective of the steel shown.
See Intermediate & End Bent detail sheets for additional steel at Bents.

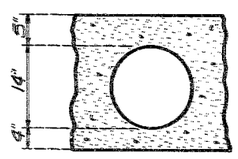

TYPICAL VOID DETAIL
(Scale: 1"=1'-0")

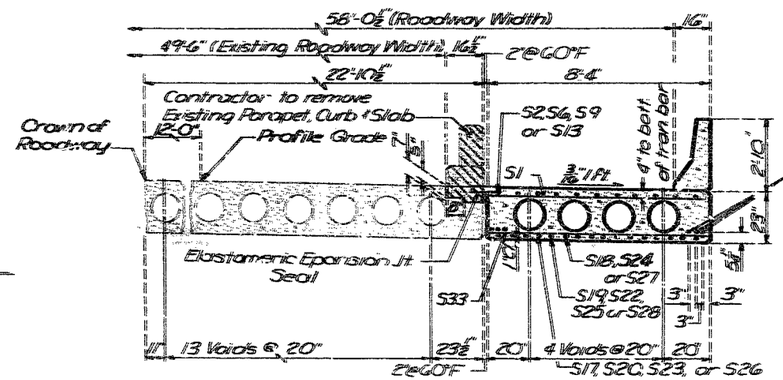

HALF SECTION AT CENTER OF SPAN
(Scale: ⅜"=1'-0")

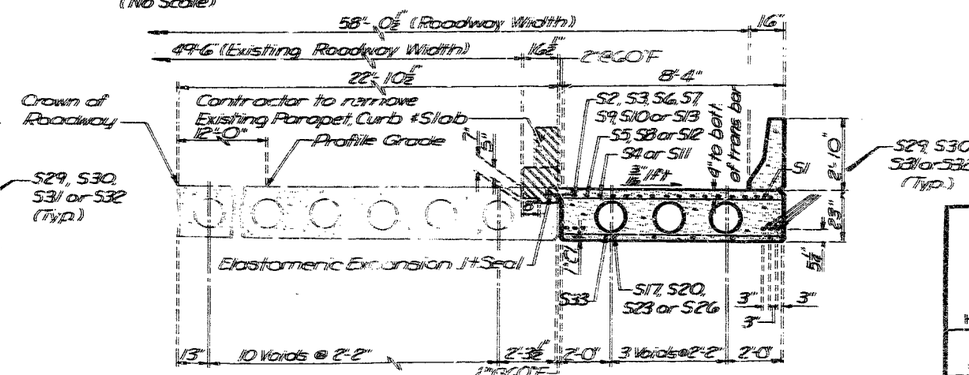

HALF SECTION NEAR INTERIOR BENT
(Scale: ⅜"=1'-0")

JACKSON COUNTY, MISSOURI

SLAB DETAILS

HOLMES ROAD — BRIDGE NO. A-1662R

BIGGER & WILLS
CONSULTING ENGINEERS, PLANNERS, & ARCHITECTS
SALINA — HAYS — KANSAS CITY

MADE SKH	DATE 2-15-83	TRACED DAC	DATE 2-16-83
CHECKED SAC	DATE 2-18-83	SCALE As Noted	

Sheet 7 of 10

259

NOTE : This contract includes the Westbound structure only. All work relating to the Eastbound structure is not included in this contract.

Note: Dimensions of the expansion device armor may vary with the type of expansion device selected. The actual dimensions used shall be those recommended by the manufacturer and approved by the Engineer. The top of the device shall be placed flush with the top of the slab.

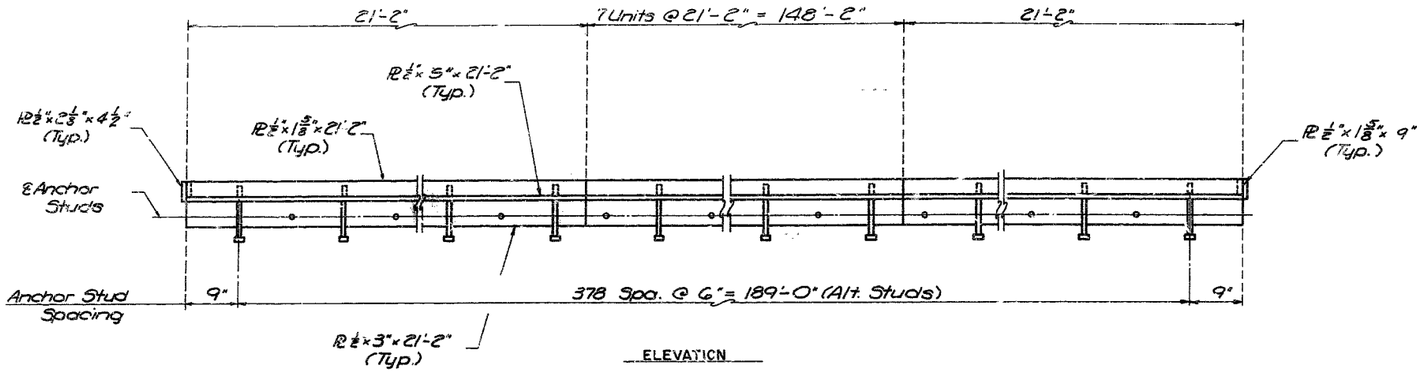

ELEVATION

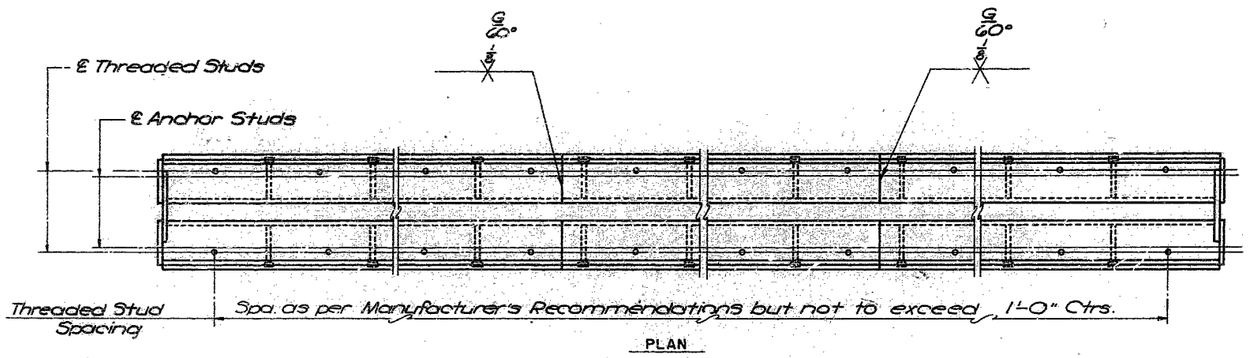

PLAN

ARMOR DETAILS

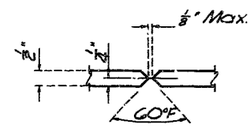

TYPICAL BEVEL WELD DETAIL
(No Scale)

TEMP. TABLE	
TEMP. (°F)	GAP (IN)
110	1.90
100	1.92
90	1.94
80	1.96
70	1.98
60	2.00
50	2.02
40	2.04
30	2.06
20	2.08
10	2.10
0	2.12

Note: All 1/2" Plate, 1/2"φ Anchor Studs and 1/2"φ Threaded Studs shall be subsidiary to the bid item "Elastomeric Expansion Joint Seal."

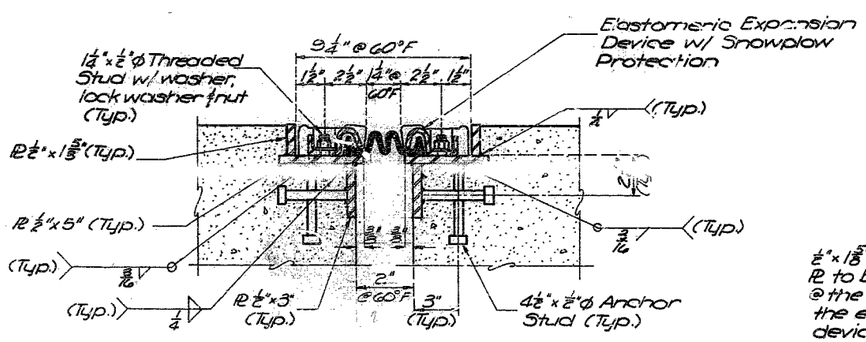

TYPICAL SECTION
(Scale: 3" = 1'-0")

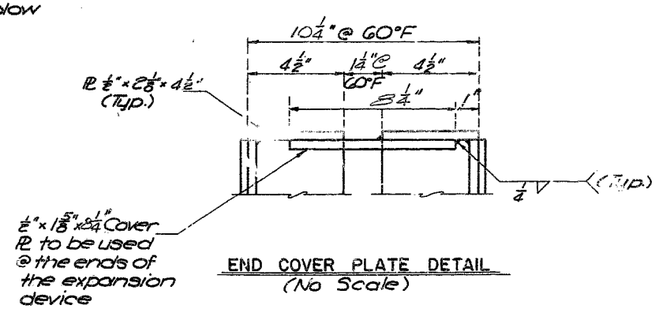

END COVER PLATE DETAIL
(No Scale)

Elastomeric expansion device shall be one of the following:

Acme Trojan TR300
Gen-Strip CCLE
On-Flex 25 (E-Lastomer Panel)
Tel-Span T30 CS

JACKSON COUNTY, MISSOURI

EXPANSION DEVICE DETAILS

HOLMES ROAD — BRIDGE NO A-1662R

BUCHER & WILLIS
CONSULTING ENGINEERS, PLANNERS, & ARCHITECTS
SALINA — HAYS — KANSAS CITY

MADE D.M.B. DATE 12-14-82 TRACED D.M.B./R.P.B. DATE 12-14-82
CHECKED R.W.P. DATE 12-14-82 SCALE As Noted

2660

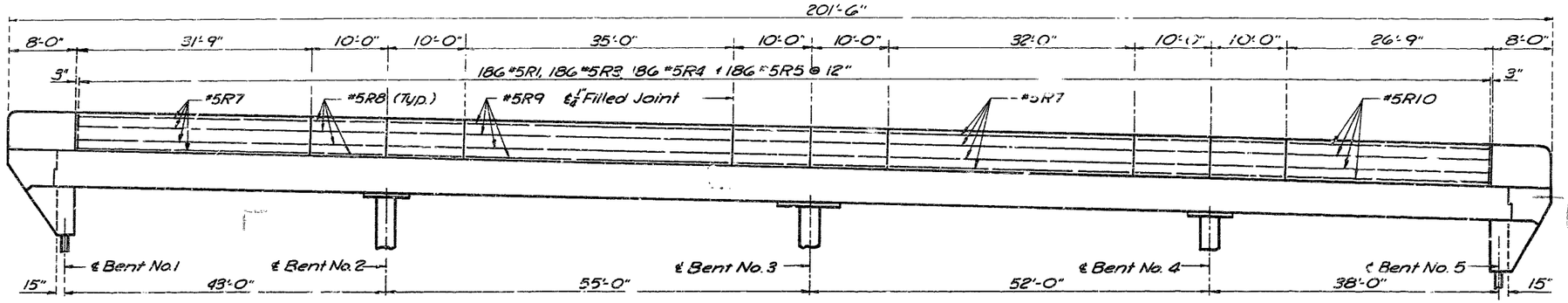

SAFETY BARRIER CURB ELEVATION
(No Scale)

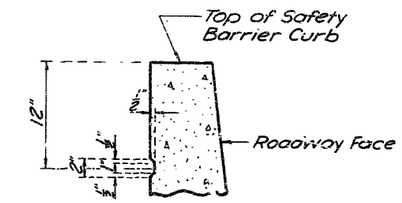

SAFETY BARRIER CURB RUSTICATION DETAILS
(Scale: 1½"=1'-0")

Note: Rustication shall end 3" from ℄ 1/4" joints and 4'-0" from the ends of the wingwalls.

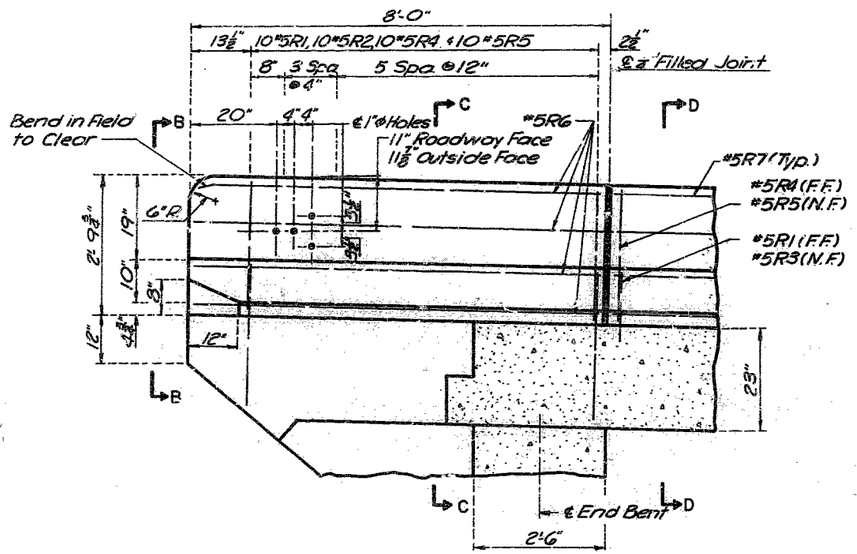

LONGITUDINAL SECTION AT END OF SAFETY BARRIER CURB
(Scale: 3/4"=1'-0")

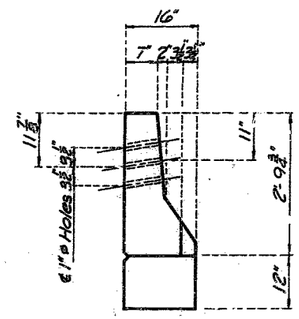

ELEVATION B-B
(Scale: 3/4"=1'-0")

Note: For Safety Barrier Curb general notes see General Plan and Elevation Sheet.

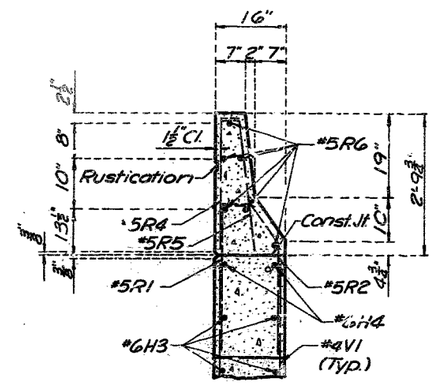

SECTION C-C
(Scale: 3/4"=1'-0")

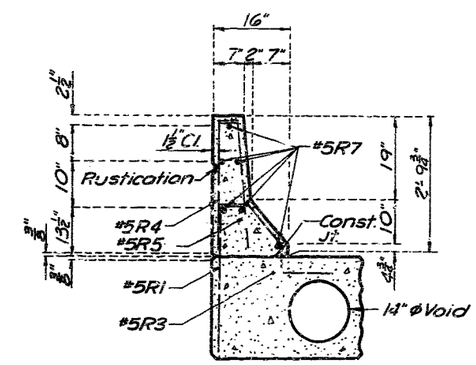

SECTION D-D
(Scale: 3/4"=1'-0")

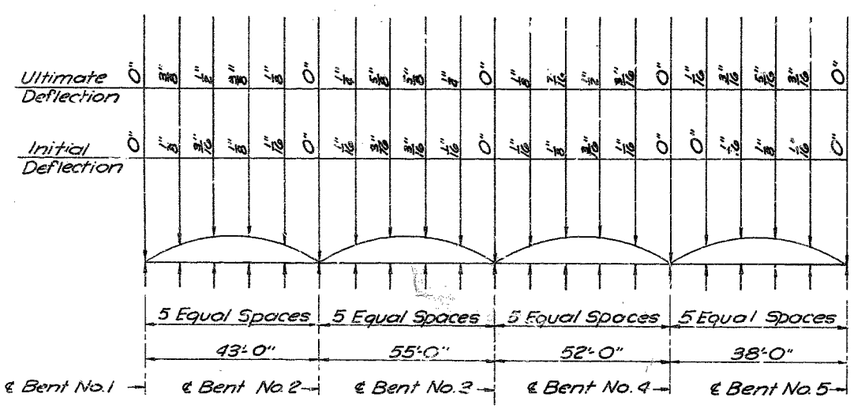

CAMBER DIAGRAM

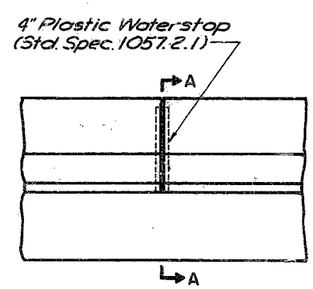

SAFETY BARRIER CURB ELEVATION

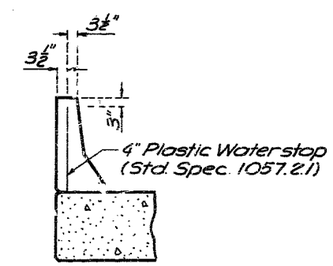

SECTION A-A

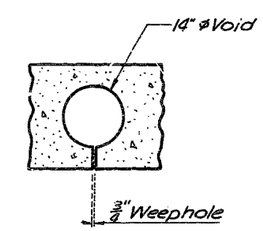

WEEPHOLE DETAIL
(Scale: 3/4"=1'-0")

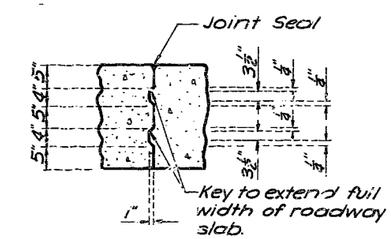

CONSTRUCTION JOINT KEY
(No Scale)

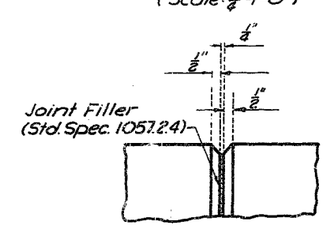

FILLED JOINT DETAIL
(Scale: 3/4"=1'-0")

PLASTIC WATERSTOPS
(Scale: 3/4"=1'-0")

NOTE: This contract includes the Westbound structure only. All work relating to the Eastbound structure is not included in this contract.

JACKSON COUNTY, MISSOURI

SAFETY BARRIER CURB AND MISCELLANEOUS DETAILS

HOLMES ROAD — BRIDGE NO. A-1662R

BIKHER & WILLIS
CONSULTING ENGINEERS, PLANNERS, & ARCHITECTS
SALINA — HAYS — KANSAS CITY

MADE RPB DATE 2-15-83 TRACED RPB DATE 2-16-83
CHECKED S.A.C. DATE 2-18-83 SCALE As Noted

2261

COMPLETE BILL OF REINFORCING (WESTBOUND LANES)

NO.	SIZE	MARK	LOCATION	EPOXY	SHAPE	LENGTH	WEIGHT
			END BENTS				
16	#6	H1	Brg. Beam		—	8'-1"	194
8	#6	H2	Brg. Beam	E	—	8'-1"	97
5	#6	H3 *	Wingwall		—	8'-11"	107
4	#6	H4	Wingwall		—	7'-0"	42
4	#6	T1	Wingwall			9'-2"	55
18	#5	U1	Brg. Beam	E		9'-1"	171
18	#5	U2	Brg. Beam			9'-1"	171
8	#4	V1 *	Wingwall		—	7'-3"	39
			INT. BENTS				
42	#9	D1	Batt. of Col.			9'-2"	1309
6	#7	D2	Pile Caps			17'-0"	208
30	#7	D3	Pile Caps		—	8'-0"	491
27	#8	H5	Bent Caps	E		9'-10"	709
21	#5	H6	Bent Caps		—	7'-8"	168
69	#4	P1	Columns			8'-3"	380
32	#5	U3	Bent Caps	E		8'-11"	298
16	#5	U4	Bent Caps	E		9'-11"	165
14	#9	V2	Bent 2 Col.			26'-8"	1269
14	#9	V4	Bent 4 Col.			24'-3"	1154
14	#9	V6	Bent 3 Col.			25'-6"	1211
			SUPERSTRUCTURE				
221	#5	S1	Slab	E	—	8'-0"	1844
11	#5	S2	Slab	E	—	26'-7"	305
6	#11	S3	Slab	E	—	38'-2"	1217
10	#11	S4	Slab	E	—	27'-6"	1461
5	#10	S5	Slab	E	—	15'-0"	323
11	#5	S6	Slab	E	—	20'-9"	238
6	#11	S7	Slab	E	—	39'-11"	1273
5	#10	S8	Slab	E	—	17'-3"	371
11	#5	S9	Slab	E	—	17'-9"	204
6	#11	S10	Slab	E	—	35'-8"	1137
5	#10	S11	Slab	E	—	19'-0"	409
5	#8	S12	Slab	E	—	5'-3"	70
11	#5	S13	Slab	E	—	22'-4"	256
22	#6	S14	Slab	E		8'-0"	264
18	#4	S15	Pvmt. Rest			2'-3"	27
2	#4	S16	Pvmt. Rest		—	8'-0"	11
6	#11	S17	Slab		—	46'-8"	1488
10	#8	S18	Slab		—	19'-0"	507
5	#9	S19	Slab		—	34'-1"	579
6	#11	S20	Slab		—	60'-1"	1915
5	#9	S22	Slab		—	34'-0"	578
6	#10	S23	Slab		—	50'-1"	1448
5	#8	S24	Slab		—	18'-3"	244
5	#9	S25	Slab		—	31'-3"	531
6	#9	S26	Slab		—	40'-9"	831
5	#7	S27	Slab		—	15'-9"	161
5	#9	S28	Slab		—	31'-1"	528
6	#7	S29	Edge Beam		—	45'-5"	557
6	#8	S30	Edge Beam		—	58'-0"	929
6	#8	S31	Edge Beam		—	55'-0"	881
6	#7	S32	Edge Beam		—	40'-5"	496
221	#5	S33	Slab		—	8'-0"	1844

NO.	SIZE	MARK	LOCATION	EPOXY	SHAPE	LENGTH	WEIGHT
			BARRIER CURB				
206	#5	R1	Bar. Curb	E		3'-4"	716
20	#5	R2	Bar. Curb	E		3'-6"	73
186	#5	R3	Bar. Curb	E		3'-1"	598
206	#5	R4	Bar. Curb	E		2'-9"	591
206	#5	R5	Bar. Curb	E		2'-9"	591
12	#5	R6	Bar. Curb	E	—	7'-8"	96
12	#5	R7	Bar. Curb	E	—	31'-5"	393
36	#5	R8	Bar. Curb	E	—	9'-8"	363
6	#5	R9	Bar. Curb	E	—	34'-8"	217
6	#5	R10	Bar. Curb	E	—	26'-5"	165

COMPLETE BILL OF REINFORCING (EASTBOUND LANES)

NOTE: The Bill of Reinforcing Steel for the Eastbound Lanes is identical to the Bill of Reinforcing Steel for the Westbound Lanes, except for the following:
Delete the #4P1, #9V2, #9V4 & #9V6 bars as shown and add the following bars:

NO.	SIZE	MARK	LOCATION	EPOXY	SHAPE	LENGTH	WEIGHT
			INT. BENTS				
58	#4	P1	Columns			8'-3"	320
14	#9	V3	Bent 2 Col.			22'-10"	1087
14	#9	V5	Bent 4 Col.			21'-3"	1019
14	#9	V7	Bent 3 Col.			21'-8"	1031

*Series "Bar

BENDING DIAGRAMS

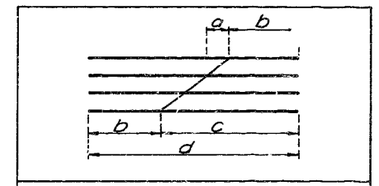

REMARKS	a	b	c	d
4 H3 Cut 16	13"	2'-10"	6'-1"	8'-11"
4 V1 Cut 20	11"	2'-3"	5'-0"	7'-3"

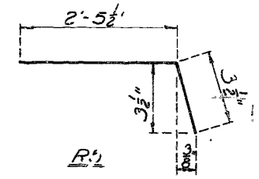

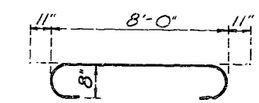

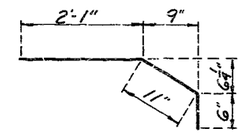

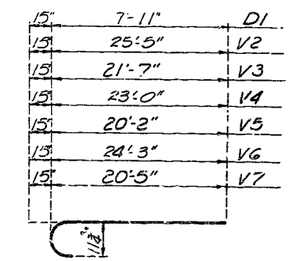

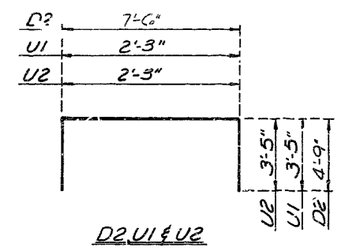

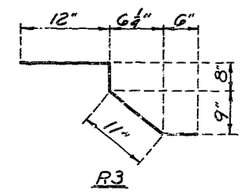

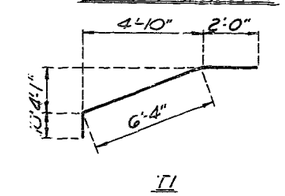

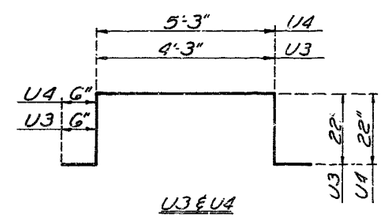

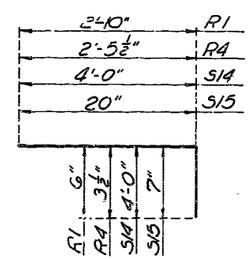

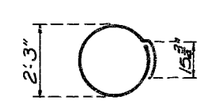

Note: All dimensions are out to out of bar unless otherwise noted.
Quantities shown are for widening of the Westbound lanes except as noted.

NOTE: This contract includes the Westbound structure only. All work relating to the Eastbound structure is not included in this contract.

JACKSON COUNTY, MISSOURI

BILL OF REINFORCING STEEL

HOLMES ROAD — BRIDGE NO. A-1662R

BOOR & WILLS
CONSULTING ENGINEERS, PLANNERS, & ARCHITECTS
SALINA — HAYS — KANSAS CITY

MADE S.K.H. DATE 2-15-83 TRACED D.A.C. DATE 2-16-83
CHECKED S.A.C. DATE 2-18-83 SCALE None

262

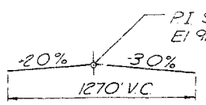

Twin 43.00'-55.00'-52.00'-38.00' Continuous Slab Spans (Voided)

NOTE: This contract includes the Westbound structure only. All work related to the Eastbound structure is not included in this contract.

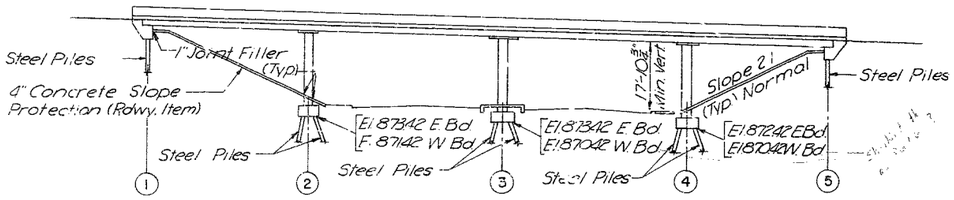

GENERAL ELEVATION
(Scale: 1" = 20')

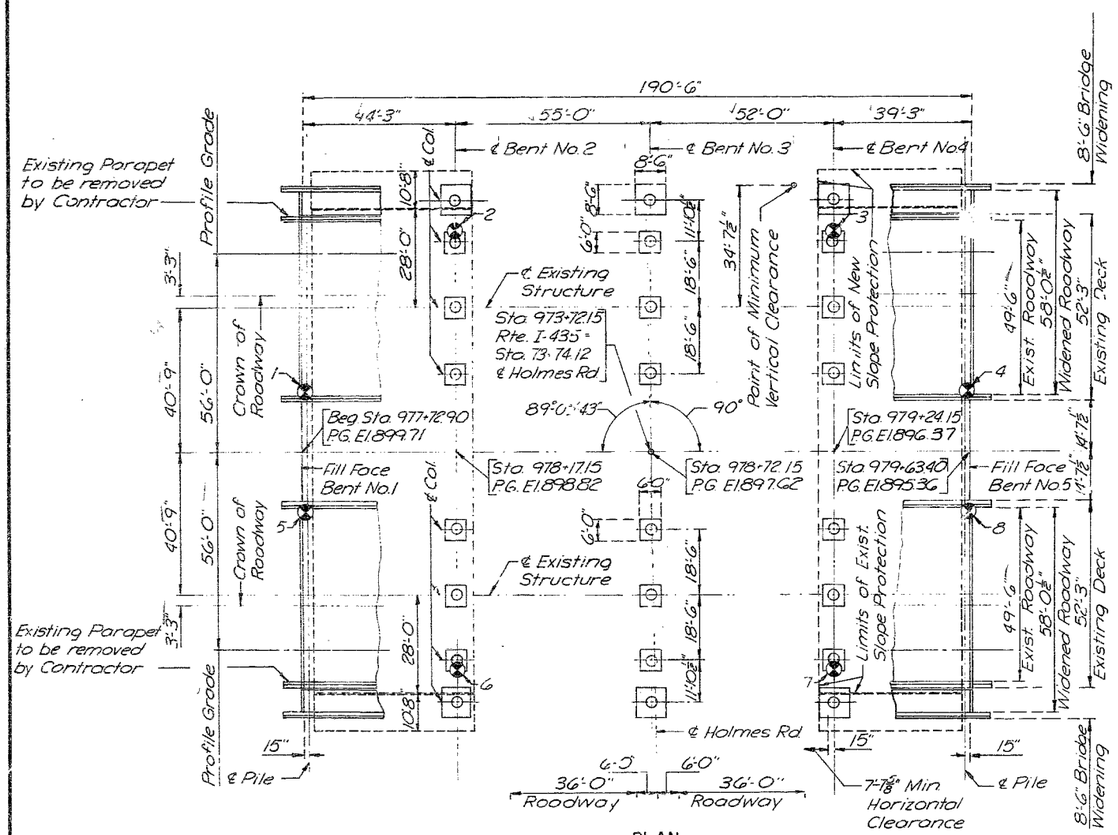

PLAN
(Scale: 1" = 20')

GENERAL NOTES

Design Specifications:
A.A.S.H.T.O.-1977, Interim '78, '79, '80, '81
Working Stress Design

Design Loading:
HS20-44 / 15# sq. ft. Future Wearing Surface
Modified 24,000# Tandem Axle
Earth 120#, Equivalent Fluid Pressure 30#

Design Unit Stresses:
Class B1 Concrete (substructure & barrier curb) f'c = 4,000 p.s.i.
Class B2 Concrete (deck slab) f'c = 4,000 p.s.i.
Reinforcing Steel (Grade 60) fy = 60,000 p.s.i.
Steel Pile fb = 9,000 p.s.i.

Boring Data:
For Boring Data see Boring Data and Estimated Quantities Sheet.
"⊗" Indicates location of boring.

Bench Mark:
Elev. 192.77 Kansas City, Missouri Standard Horizontal Control Monument #199 = Elev. 915.07 U.S.G.S. Datum.
Plan Elevations shown are U.S.G.S. Datum.

Removal of Existing Structure:
Outline of old work is indicated by light dashed lines on the detail sheets. Heavy lines indicate new work. Removal Limits of existing structure are shown in crosshatching.

Excavation:
Pay limits for excavation quantities are measured from the existing ground line.

Reinforcing Steel:
Minimum clearance to reinforcing steel shall be 1 1/2" unless otherwise shown.

Concrete Voided Slab:
The contractor shall pour and satisfactorily finish the concrete roadway slab at a rate of not less than 25 cubic yards per hour.
If the contractor cannot place the slab in one continuous pour, construction joints shall be placed at locations as approved by the Engineer.
Finish each side of the optional joint with 1/4" edging tool.
Tubes for producing voids shall have an outside diameter of 14.0" and shall be anchored at not more than 4'-0" centers. Fiber tubes shall have a wall thickness of not less than 0.250".
One 3/8" ø weephole shall be provided near the ends of each void. Weepholes shall be placed in straight lines parallel to bent.
The cross-slope and elevation of the 23" uniform slab shall be varied as required to match the existing slab and provide a uniform wearing surface across the junction of the new and existing slabs. The thickness of the new drop panel may vary as required by maintaining the top of column elevation as shown on the plans and providing the necessary drop panel thickness to accommodate the resulting bottom of new deck elevation.

Construction Specifications:
Current issue of Missouri Standard Specifications for Highway Construction.

Safety Barrier Curb:
Top of safety barrier curb shall be built parallel to grade with barrier curb joints normal to grade.
All exposed edges of safety barrier curb shall have 3/4" radius or 3/4" bevel unless otherwise noted.
Plastic waterstop shall be placed in all safety barrier curb filled joints.
Cost of plastic waterstop complete in place shall be included in the bid price for concrete.

Surface Seal:
Superstructure deck surface shall be sealed in accordance with Section 409 of the Standard Specifications.
Surface to be sealed also includes the [illegible] the existing parapet and curb that is to be replaced.

Traffic Maintained:
Traffic over structure to be maintained during construction.

Falsework:
Falsework over existing lanes should be constructed with a minimum vertical clearance of 14' from crown of existing lanes and a minimum lateral clearance of 2 feet beyond edge of pavement.

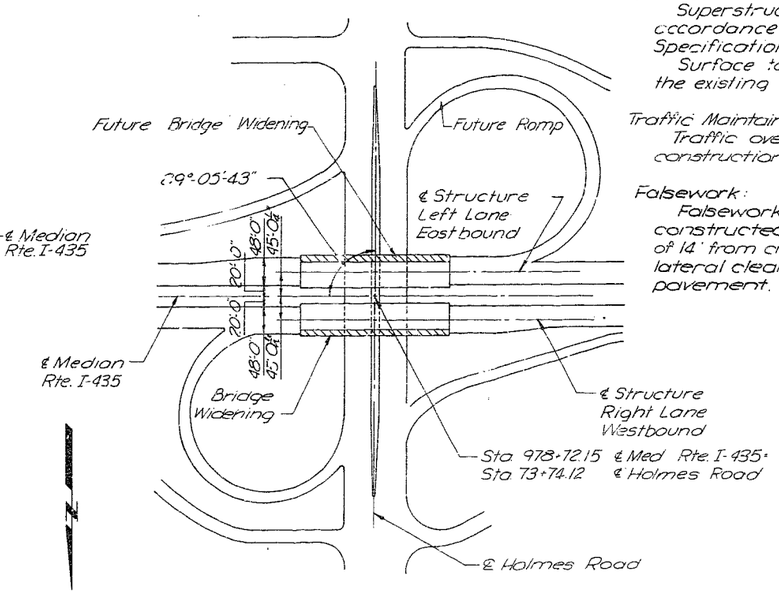

LOCATION SKETCH
(No Scale)

#3410713

A-1662 R1 W.B. Lowe

JACKSON COUNTY, MISSOURI

GENERAL PLAN AND ELEVATION

HOLMES ROAD Jackson Co.

BUCHER & WILLIS
CONSULTING ENGINEERS, PLANNERS, & ARCHITECTS
SALINA HAYS KANSAS CITY

MADE S.D.C. DATE 2-15-83 TRACED D.A.C. DATE 2-16-83
CHECKED S.A.C. DATE 2-18-83 SCALE As Noted

117

A-1662 R1

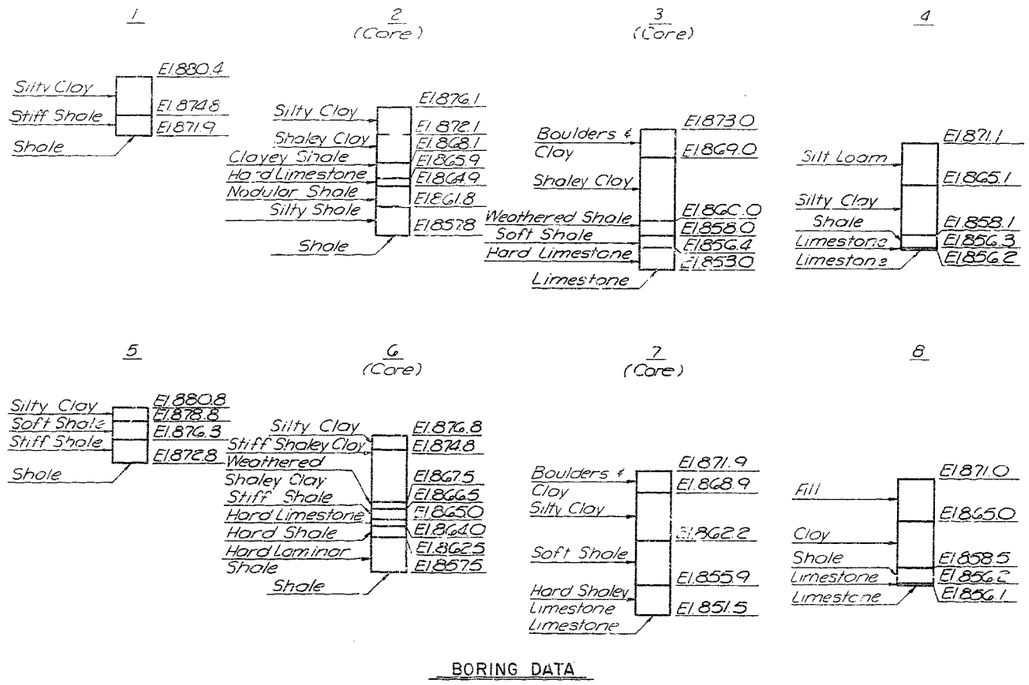

BORING DATA

Note: For location of Borings see General Plan & Elevation Sheet

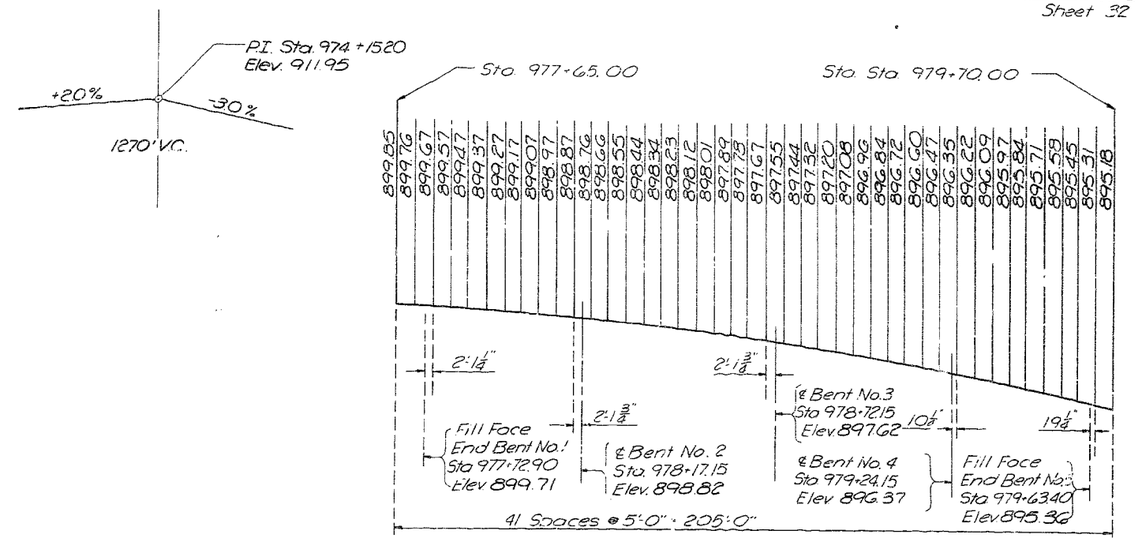

PROFILE GRADE ELEVATIONS

Note: The profile grade shown is the theoritical profile grade of 1-435 as obtained from the original construction plans. These elevations should not be used for construction as the existing elevations do not agree with this profile.

NOTE: This contact includes the Westbound structure only. All work relating to the Eastbound structure is not included in this contract.

PILE DATA

BENT NO.	END BENT NO.1		INT. BENT NO.2		INT. BENT NO.3		INT. BENT NO.4		END BENT NO.5	
LANE	E. Bd	W. Bd	E. Bd	W. Bd	E. Bd	W. Bd	E. Bd	W. Bd	E. Bd	W. Bd
Pile Type and Size	HP 10×42		HP 10×42		HP 10×42		HP 10×42		HP 10×42	
Number	2	2	4	4	4	4	4	4	2	2
Approximate Length Ft.	33	33	12	12	19	19	19	19	39	39
Design Bearing Tons	29	29	66	48	48	48	66	66	29	29
Hammer Energy Reqd Ft. Lbs	7000	7000	14900	14900	10800	10800	14900	14900	7000	7000

Note: Minimum energy requirement of the hammer based on plan length and design bearing value of the piles.
All piles shall be driven to practical refusal.

ESTIMATED QUANTITIES

ITEM		EASTBOUND	WESTBOUND	TOTAL
Removal & Replacement of Det. Conc.	Cu. Ft.	6	4	10
Removal of Concrete	Cu. Yd.	24.2	24.2	48.4
Class I Excavation	Cu. Yd.	71.0	61.0	132.0
Structural Steel Pile (10")	Lin. Ft.	344	344	688
Class B1 Concrete	Cu. Yd.	59.4	60.6	120.0
Class B2 Concrete	Cu. Yd.	100.7	100.7	201.4
Steel Reinforced Elast. Exp. Jt. Seal	Lin. Ft.	191	191	382
Reinforcing Steel (Grade 60)	Lbs.	19,800	20,170	39,970
Reinforcing Steel (Gr. 60) Epoxy Coated	Lbs.	14,610	14,610	29,220
Epoxy Resin Crack Repair	Lin. Ft.	13	10	23

Note: All concrete and reinforcing steel (Grade 60) above the lower construction joint in the End Bents and Wingwalls and above the tops of the columns in the Intermediate Bents shall be included in the Superstructure Quantities.

JACKSON COUNTY, MISSOURI

BORING DATA AND ESTIMATED QUANTITIES

HOLMES ROAD

BUCHER & WILLIS
CONSULTING ENGINEERS, PLANNERS & ARCHITECTS
SALINA HAYS KANSAS CITY

MADE S.A.C. DATE 2-10-83 TRACED D.A.C. DATE 2-16-83
CHECKED S.K.H. DATE 2-16-83 SCALE No Scale

118

NOTE: This contract includes the Westbound structure only. All work relating to the Eastbound structure is not included in this contract

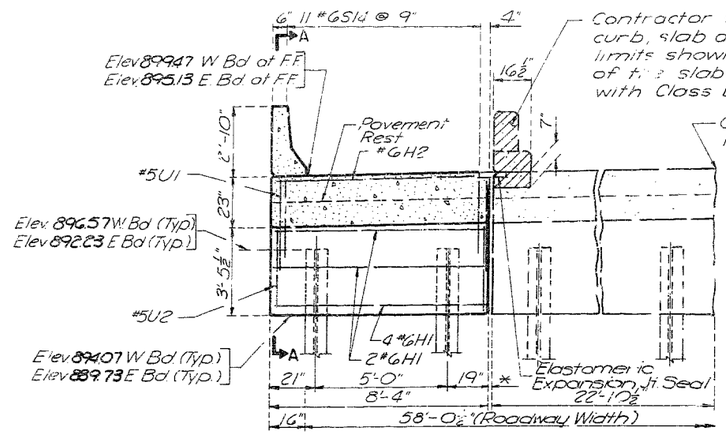

ELEVATION

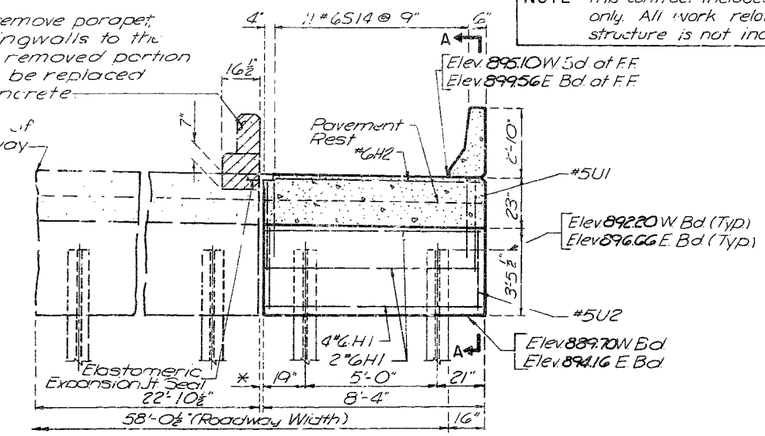

ELEVATION

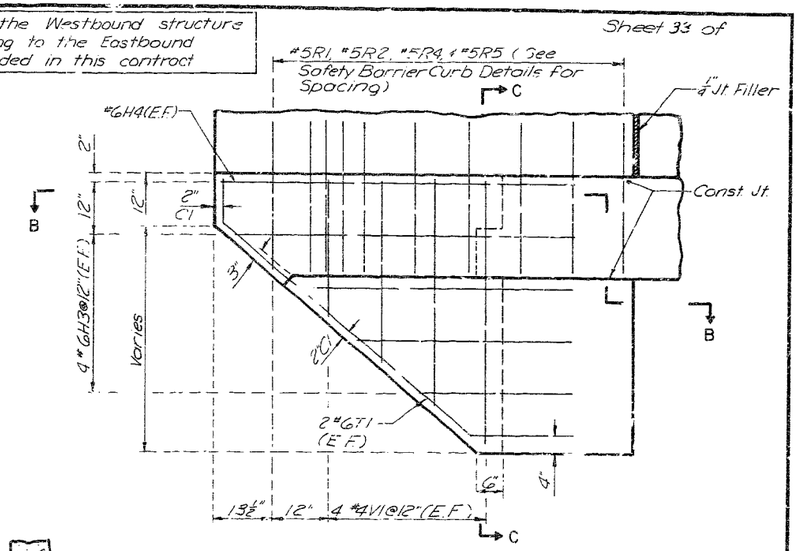

ELEVATION OF WING
(Scale: ¾" = 1'-0")

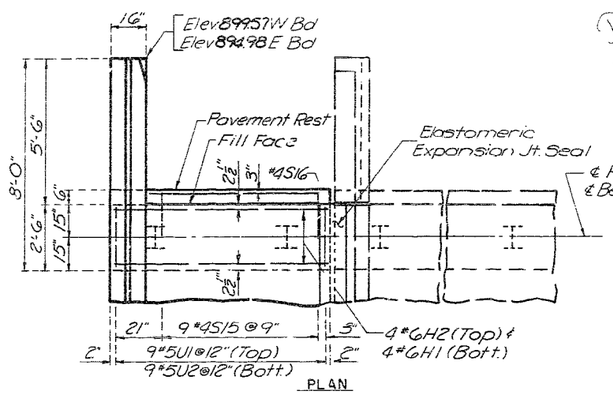

PLAN

WESTBOUND END BENT NO. 1
EASTBOUND END BENT NO. 5
(Scale: ¾" = 1'-0")

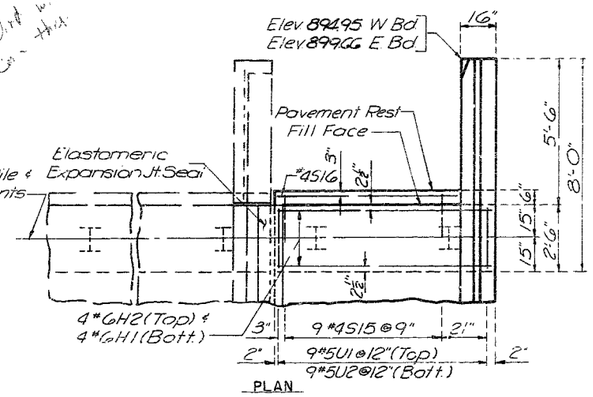

PLAN

WESTBOUND END BENT NO. 5
EASTBOUND END BENT NO. 1
(Scale: ¾" = 1'-0")

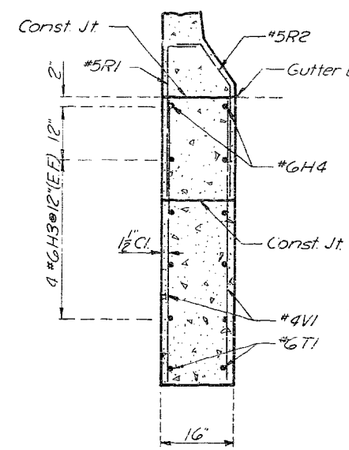

SECTION C-C
(Scale: ¾" = 1'-0")

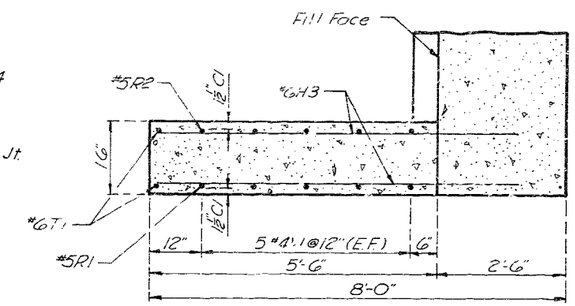

SECTION B-B
(Scale: ¾" = 1'-0")

REMOVAL AND REPLACEMENT OF DETERIORATED CONCRETE		
LOCATION	DESCRIPTION	QUANTITY (C.F.)
Bent No. 5 W. Bd. Br.	20"×18"×3" South Face	0.6
Bent No. 1 W. Bd. Br.	2'-0"×4'-0"×3" South Face 12"×12"×3" North Face	2.3
Bent No. 5 E. Bd. Br.	4'-0"×16"×3" South Face 20"×20"×3" North Face	2.0
Bent No. 1 E. Bd. Br.	20"×3'-0"×3" South Face 2'-3"×2'-6"×3" North Face	2.7
TOTAL		7.6

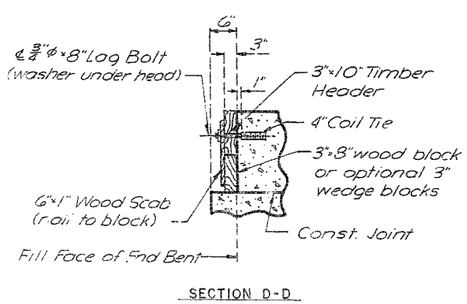

SECTION D-D

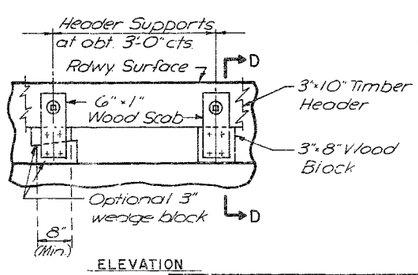

ELEVATION

TIMBER HEADER
(No Scale)

Note: Cost of timber headers complete in place shall be included in the bid price for concrete

EPOXY RESIN CRACK REPAIR		
LOCATION	DESCRIPTION	QTY. (L.F.)
Bent No. 5 W. Bd. Br.	1 @ 4'-0" North Face	4
TOTAL		4

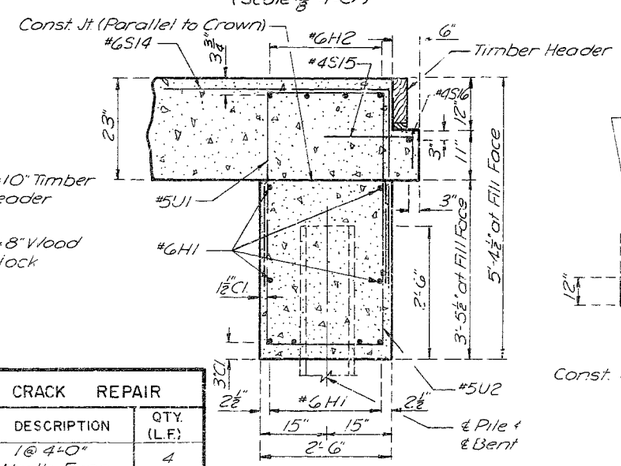

SECTION A-A
(Scale: ¾" = 1'-0")

Contractor to remove existing wings on the South side of the E. Bd. Lanes and the North side of the W. Bd. Lanes to the limits shown.

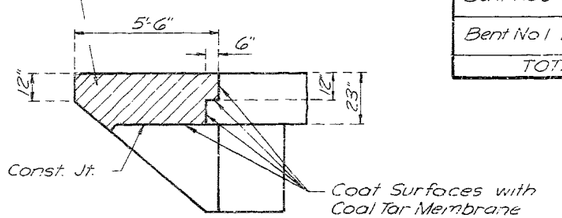

WINGWALL REMOVAL
(Scale: ¾" = 1'-0")

JACKSON COUNTY, MISSOURI

END BENTS NO. 1 AND NO. 5 DETAILS

HOLMES ROAD

BUCHER, WILLIS & RATZ
CONSULTING ENGINEERS, PLANNERS, & ARCHITECTS
SALINA HAYS KANSAS CITY

MADE D.A.C. DATE 2-15-83 TRACED D.A.C. DATE 2-16-83
CHECKED S.A.C. DATE 2-18-83 SCALE As Noted

119

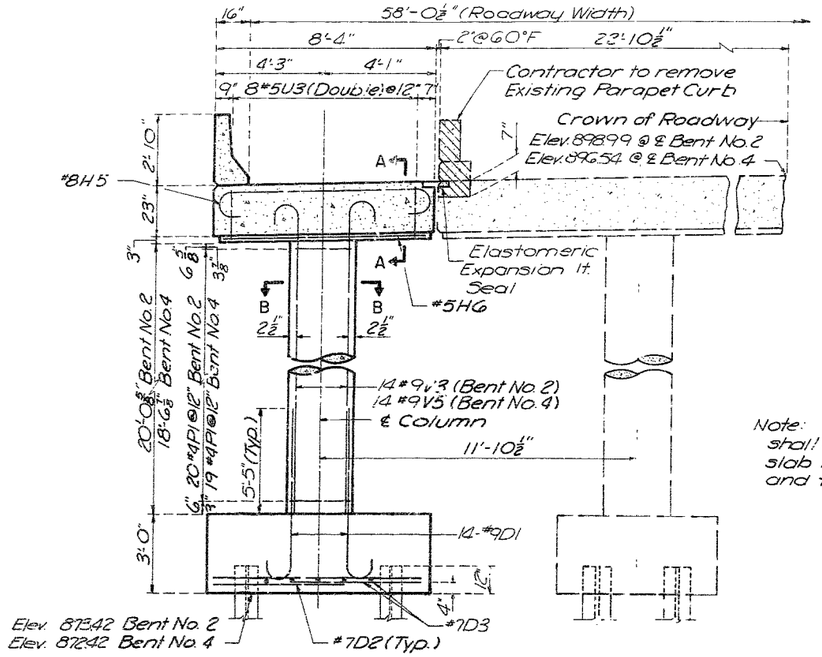

ELEVATION

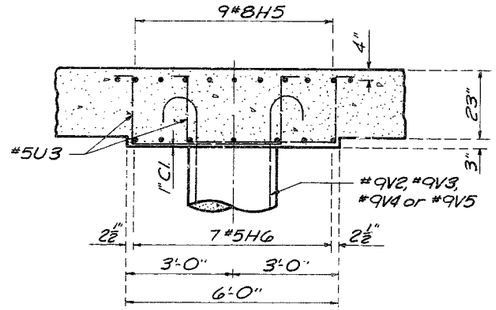

SECTION A-A
(Scale: ½" = 1'-0")

Note: Bottom of drop panel shall be parallel to top of slab both longitudinally and transversely.

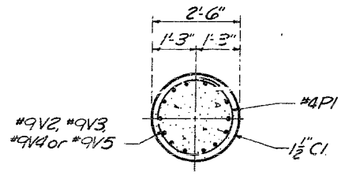

SECTION B-B
(Scale: ½" = 1'-0")

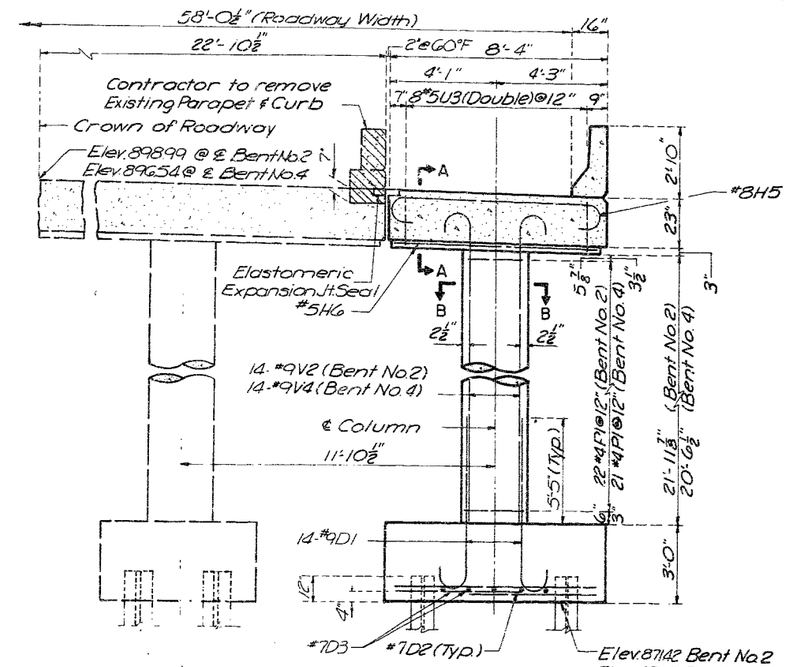

ELEVATION

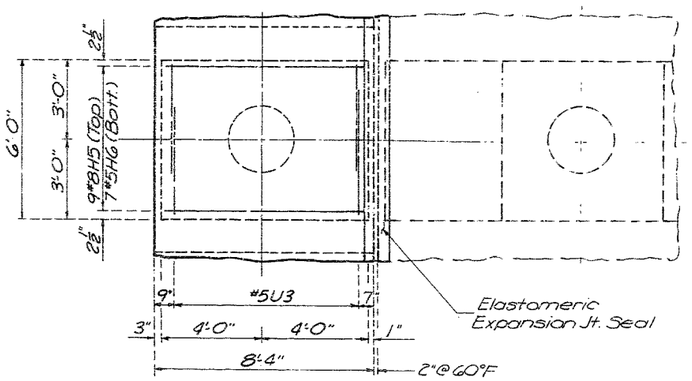

PLAN

EASTBOUND LANES
(Scale: ⅜" = 1'-0")

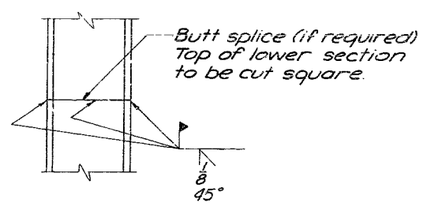

STEEL PILE SPLICE
(No Scale)

Note: For Pile Cap Plan see Intermediate Bent No. 3 Detail Sheet.

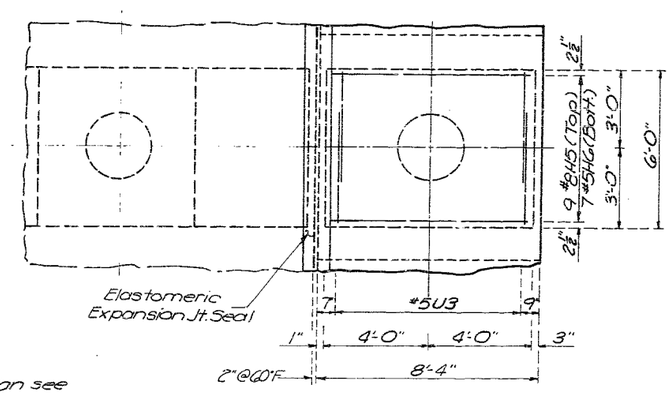

PLAN

WESTBOUND LANES
(Scale ⅜" = 1'-0")

REMOVAL AND REPLACEMENT OF DETERIORATED CONCRETE		
LOCATION	DESCRIPTION	QUANTITY (C.F.)
Bent No. 2 E. Bd. Br.	6" × 3'-0" × 3" South Face	0.4
Bent No. 2 W. Bd. Br.	12" × 12" × 3" South Face	0.3
TOTAL		0.7

EPOXY RESIN CRACK REPAIR		
LOCATION	DESCRIPTION	QTY. (L.F.)
Bent No. 4 W. Bd. Br.	1 @ 3'-0" South Face	3
Bent No. 2 W. Bd. Br.	1 @ 18" South Face 1 @ 12" North Face	3
Bent No. 4 E. Bd. Br.	1 @ 12" South Face 1 @ 12" North Face	2
Bent No. 2 E. Bd. Br.	1 @ 12" South Face 1 @ 4'-6" North Face	6
TOTAL		14

NOTE: This contract includes the Westbound structure only. All work relating to the Eastbound structure is not included in this contract.

JACKSON COUNTY, MISSOURI

INTERMEDIATE BENTS NO. 2 AND NO. 4 DETAILS

HOLMES ROAD

BUCKNER & WILLIS
CONSULTING ENGINEERS, PLANNERS, & ARCHITECTS
SALINA HAYS KANSAS CITY

MADE S.K.H. DATE 2-15-83 TRACED D.M.B. DATE 2-16-83
CHECKED S.A.C. DATE 2-18-83 SCALE As Noted

120

NOTE: This contract includes the Westbound structure only. All work relating to the Eastbound structure is not included in this contract.

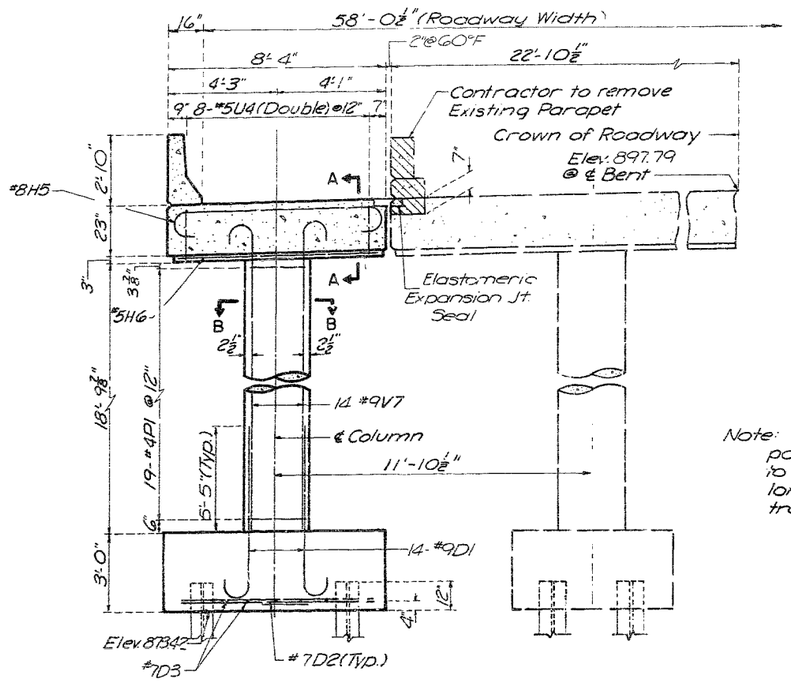

ELEVATION

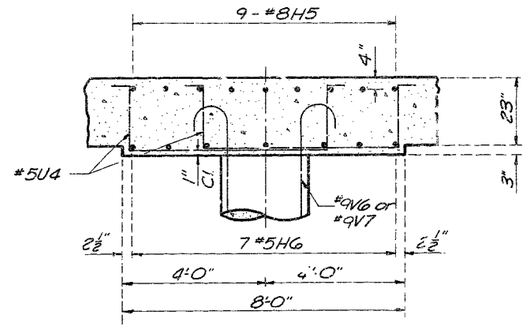

Note: Bottom of drop panel shall be parallel to top of slab both longitudinally and transversely.

SECTION A-A
(Scale: ½" = 1'-0")

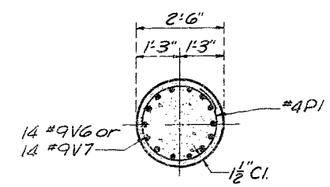

SECTION B-B
(Scale: ½" = 1'-0")

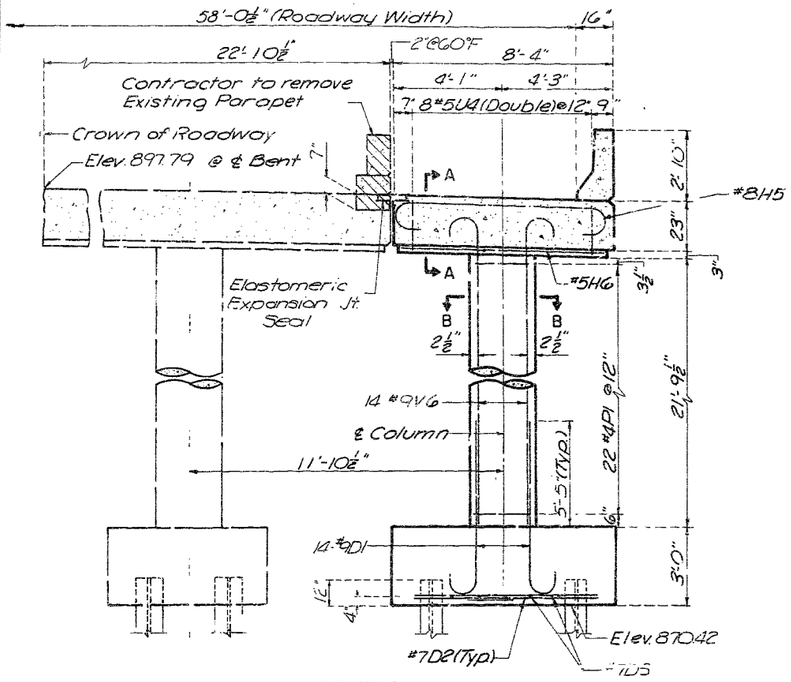

ELEVATION

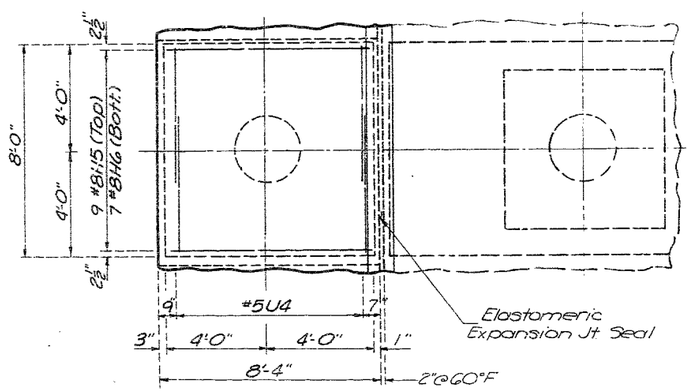

PLAN

EASTBOUND BENT NO. 3
(Scale: ⅜" = 1'-0")

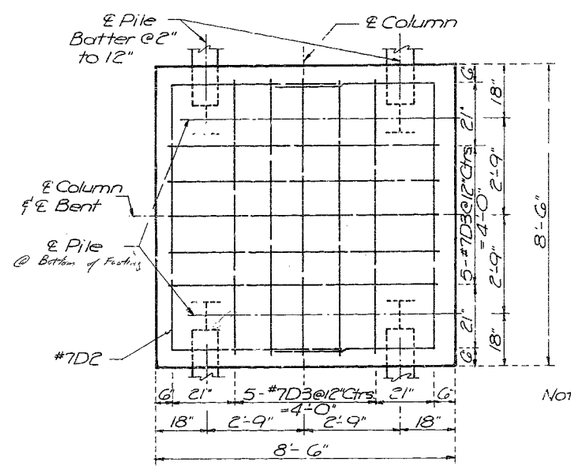

PILE CAP PLAN
(Scale: ½" = 1'-0")

Note: For Steel Pile Splice see Intermediate Bents No. 2 & No. 4 Detail Sheet.

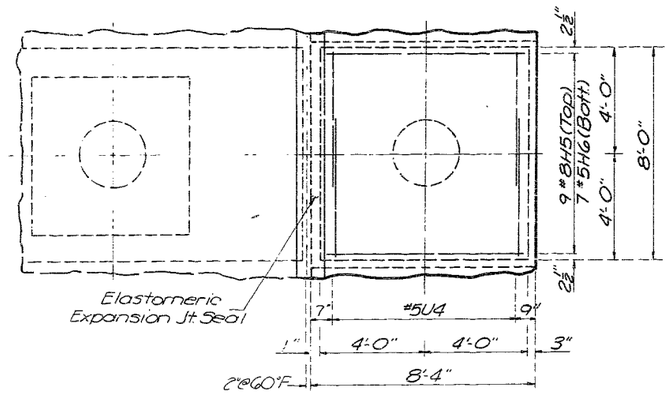

PLAN

WESTBOUND BENT NO. 3
(Scale: ⅜" = 1'-0")

REMOVAL AND REPLACEMENT OF DETERIORATED CONCRETE		
LOCATION	DESCRIPTION	QUANTITY (C.F.)
Bent No. 3 W. Bd. Br.	18" × 2'-0" × 3" South Face 16" × 8" × 3" North Face	1.0
Bent No. 3 E. Bd. Br.	4'-0" × 6" × 3" South Face	0.5
TOTAL		1.5

EPOXY RESIN CRACK REPAIR		
LOCATION	DESCRIPTION	QTY. (L.F.)
Bent No. 3 Eastbound Br.	1 @ 5'-0" North Face	5
TOTAL		5

JACKSON COUNTY, MISSOURI

INTERMEDIATE BENT NO. 3 DETAILS

HOLMES ROAD

BUCKER & WILLIS
CONSULTING ENGINEERS, PLANNERS, & ARCHITECTS
SALINA HAYS KANSAS CITY

MADE SKH DATE 2-15-83 TRACED DMB DATE 2-16-83
CHECKED S.A.C. DATE 2-18-83 SCALE As Noted

121

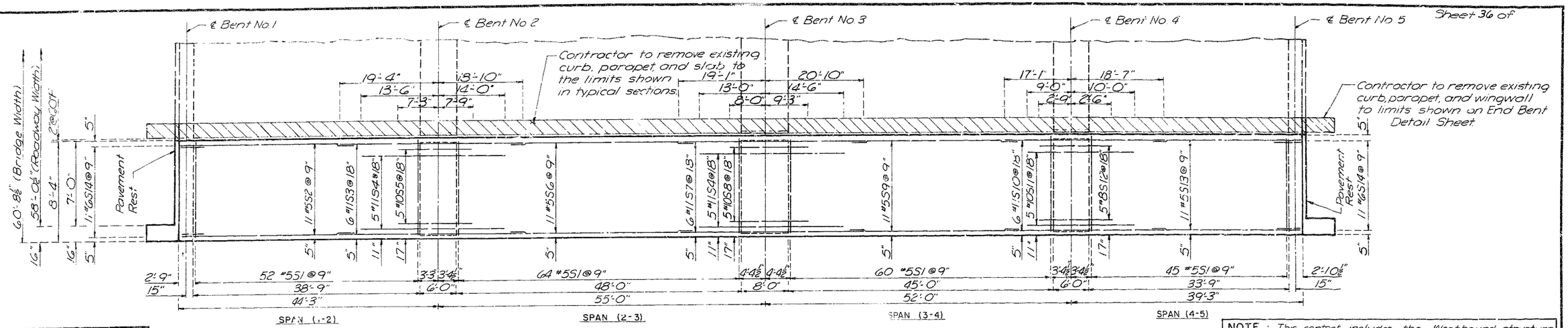

SLAB PLAN SHOWING TOP REINFORCING STEEL
(No Scale)

NOTE: This contact includes the Westbound structure only. All work relating to the Eastbound structure is not included in this contract.

MINIMUM BAR LAPS		
SIZE	TOP BAR	OTHER THAN TOP BAR
#5	2'-5"	2'-2"
#7		2'-7"
#8		3'-5"
#9		3'-3"
#10		4'-1"
#11		5'-1"

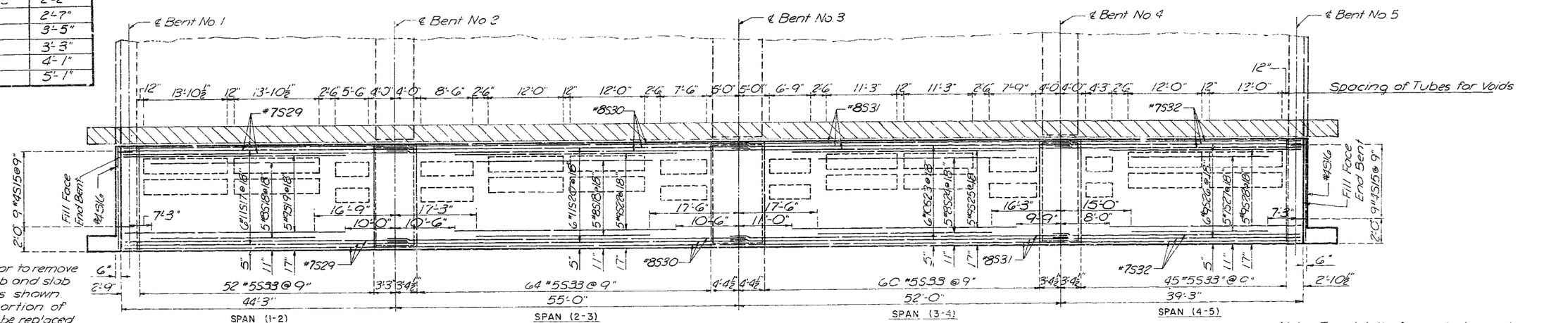

Note: Contractor to remove parapet curb and slab to the limits shown. Removed portion of slab shall be replaced as Class B2 Concrete.

SLAB PLAN SHOWING BOTTOM REINFORCING STEEL
(No Scale)

Note: For detail of weephole and optional construction joint see Safety Barrier Curb and Misc. Details Sheet.
For slab notes see General Plan & Elevation Sheet.
Steel shown is for westbound lane. Steel for eastbound lane will be reflective of the steel shown.
See Intermediate & End Bent detail sheets for additional steel at Bents.

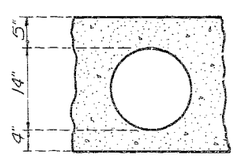

TYPICAL VOID DETAIL
(Scale 1"=1'-0")

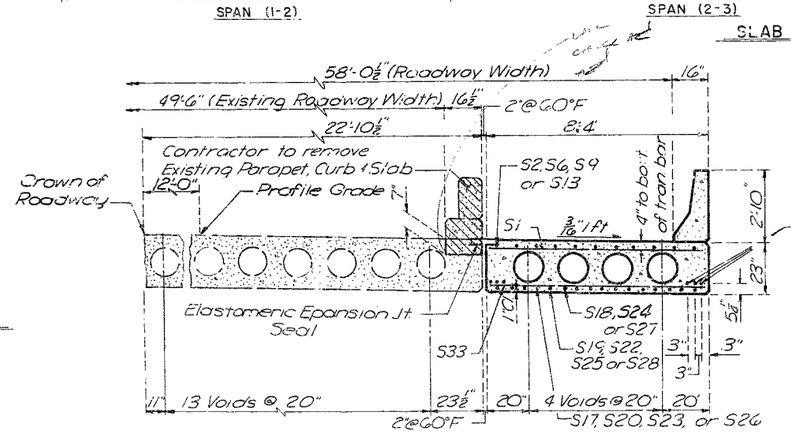

HALF SECTION AT CENTER OF SPAN
(Scale ⅜"=1'-0")

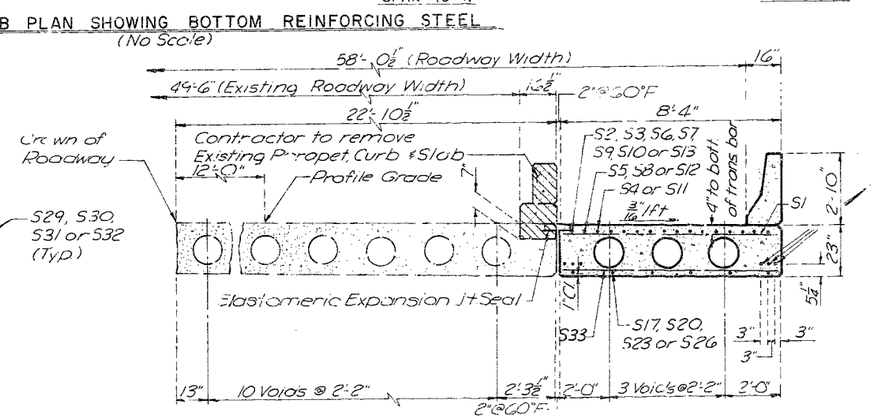

HALF SECTION NEAR INTERIOR BENT
(Scale ⅜"=1'-0")

JACKSON COUNTY, MISSOURI

SLAB DETAILS

HOLMES ROAD

BUCKNER & WILLIS
CONSULTING ENGINEERS, PLANNERS, & ARCHITECTS
SALINA HAYS KANSAS CITY

MADE S.K.H. DATE 2-15-83 TRACED D.A.C. DATE 2-16-83
CHECKED S.A.C. DATE 2-18-83 SCALE As Noted

122

NOTE : This contract includes the Westbound structure only. All work relating to the Eastbound structure is not included in this contract.

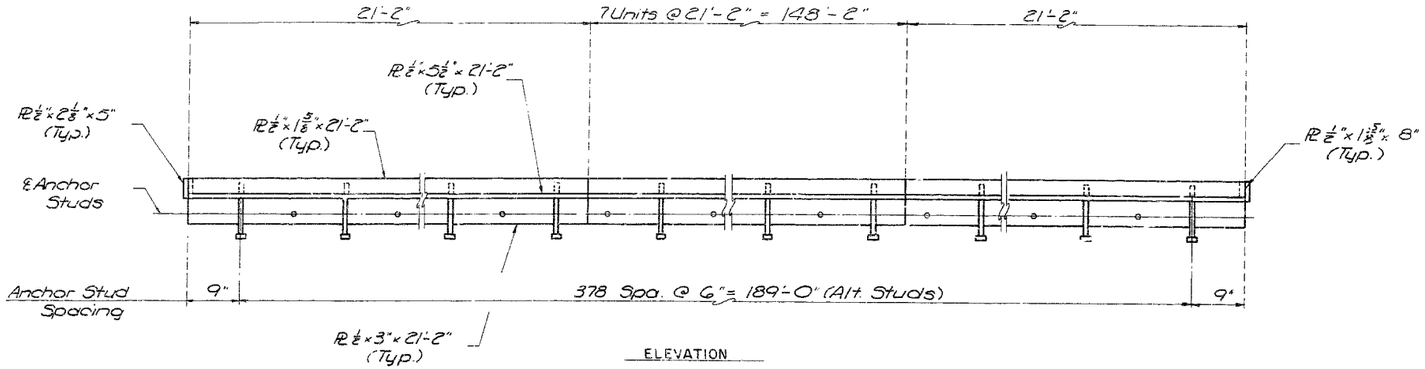

ELEVATION

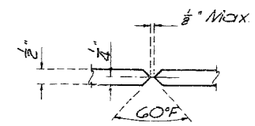

TYPICAL BEVEL WELD DETAIL
(No Scale)

TEMP. TABLE	
TEMP. (°F)	GAP (IN.)
110	1.90
100	1.92
90	1.94
80	1.96
70	1.98
60	2.00
50	2.02
40	2.04
30	2.06
20	2.08
10	2.10
0	2.12

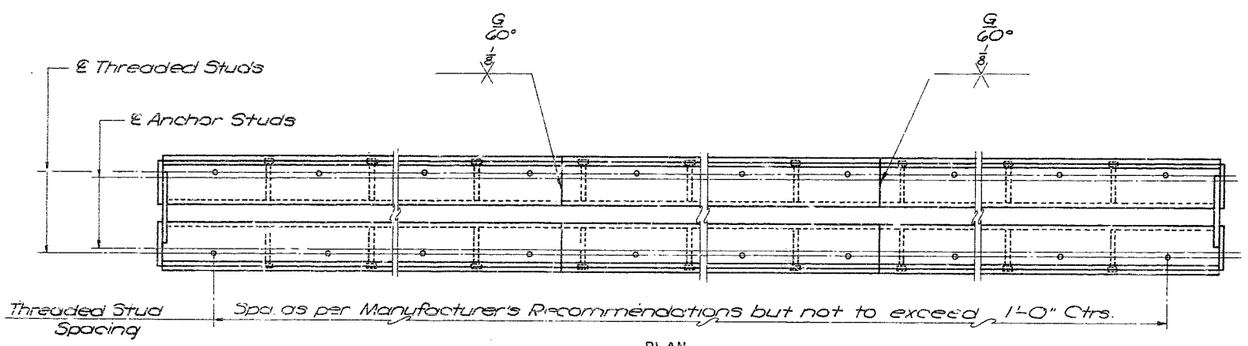

PLAN

ARMOR DETAILS

Note: All 1/2" Plate, 1/2"ϕ Anchor Studs and 1/2"ϕ Threaded Studs shall be subsidiary to the bid item "Steel Reinforced Elastomeric Expansion Joint Seal".

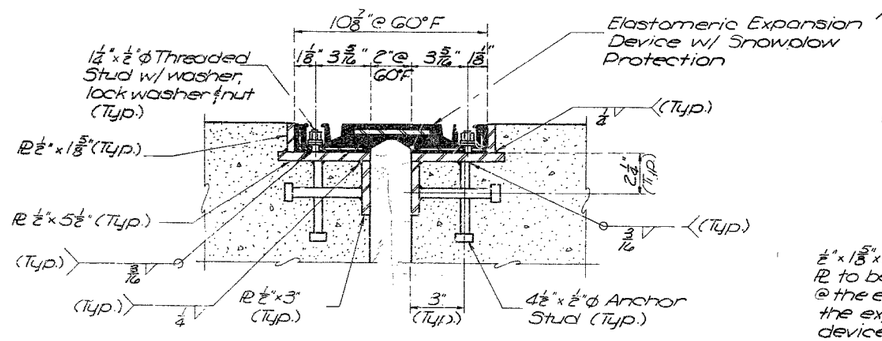

TYPICAL SECTION
(Scale: 3" = 1'-0")

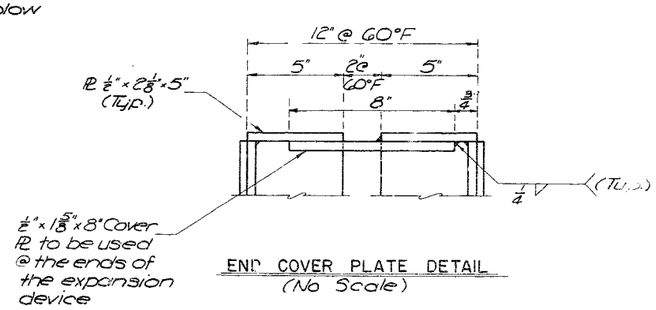

END COVER PLATE DETAIL
(No Scale)

Elastomeric expansion device shall be one of the following:

Acme Trojan TR300
Gen-Strip CCLE"
On-Flex 25
WABO Bendoflex 250

JACKSON COUNTY, MISSOURI

EXPANSION DEVICE DETAILS

HOLMES ROAD

BOGNER & WELLS
CONSULTING ENGINEERS, PLANNERS, & ARCHITECTS
SALINA HAYS KANSAS CITY

MADE D.M.B. DATE 12-14-82 TRACED D.M.B./R.P.B. DATE 12-14-82
CHECKED R.W.P. DATE 12-14-82 SCALE As Noted

123

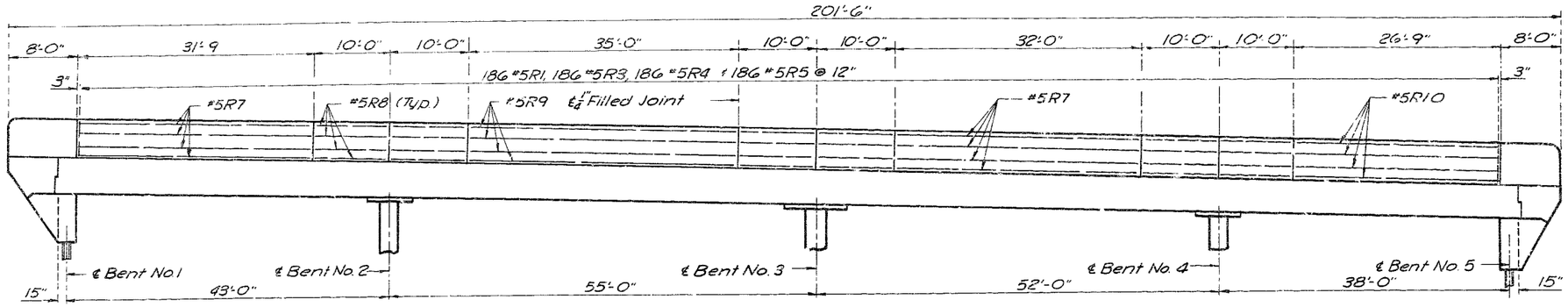

SAFETY BARRIER CURB ELEVATION
(No Scale)

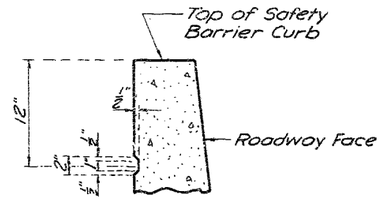

SAFETY BARRIER CURB RUSTICATION DETAILS
(Scale: 1 1/2" = 1'-0")

Note: Rustication shall end 3" from ℄ 1/4" joints and 4'-0" from the ends of the wingwalls.

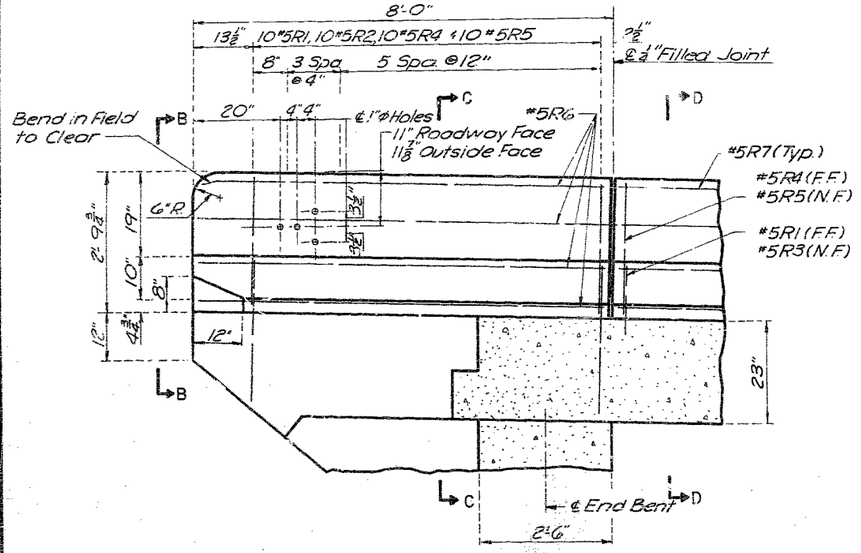

LONGITUDINAL SECTION AT END OF SAFETY BARRIER CURB
(Scale: 3/4" = 1'-0")

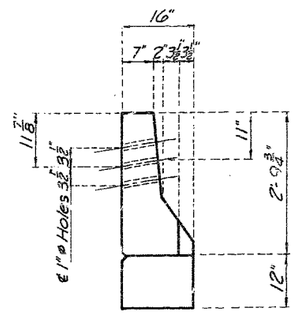

ELEVATION B-B
(Scale: 3/4" = 1'-0")

Note: For Safety Barrier Curb general notes see General Plan and Elevation Sheet.

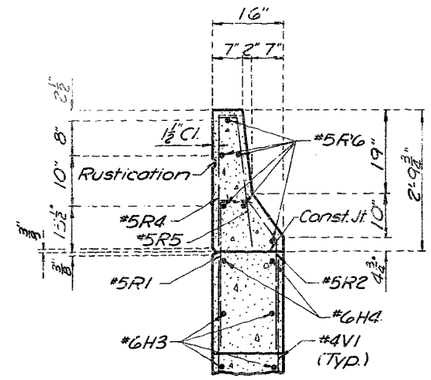

SECTION C-C
(Scale: 3/4" = 1'-0")

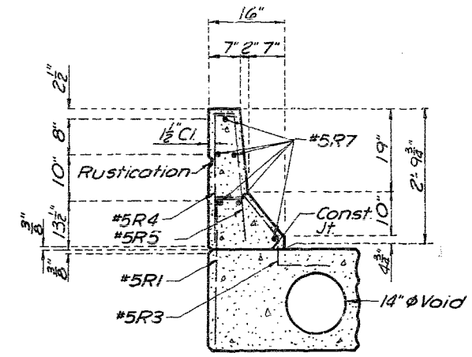

SECTION D-D
(Scale: 3/4" = 1'-0")

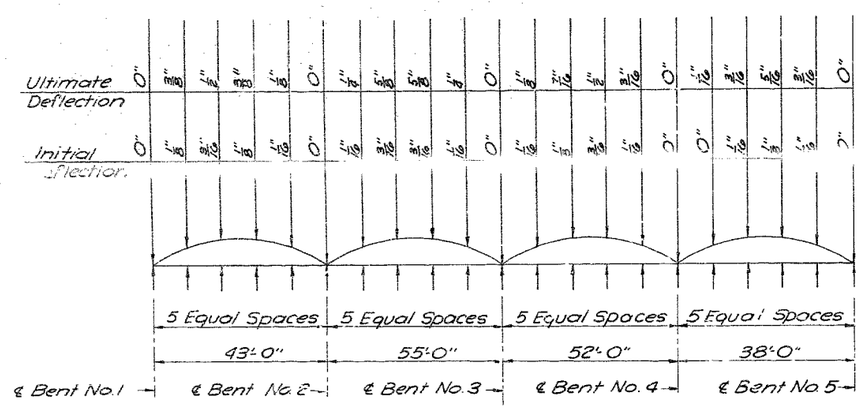

CAMBER DIAGRAM

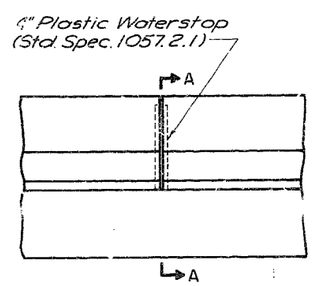

SAFETY BARRIER CURB ELEVATION

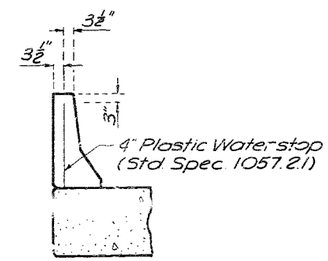

SECTION A-A

PLASTIC WATERSTOPS
(Scale: 1/2" = 1'-0")

NOTE: This contract includes the Westbound structure only. All work relating to the Eastbound structure is not included in this contract.

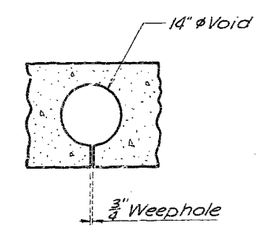

WEEPHOLE DETAIL
(Scale: 3/4" = 1'-0")

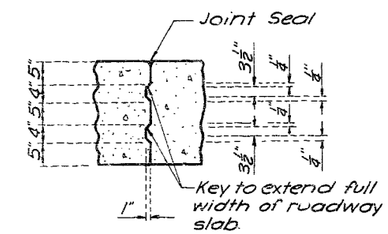

CONSTRUCTION JOINT KEY
(No Scale)

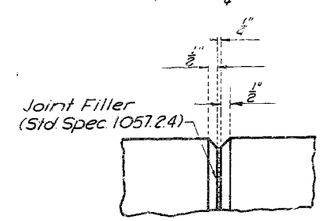

FILLED JOINT DETAIL
(Scale: 3" = 1'-0")

JACKSON COUNTY, MISSOURI

SAFETY BARRIER CURB AND MISCELLANEOUS DETA

HOLMES ROAD

BUCHER & WILLIS
CONSULTING ENGINEERS, PLANNER
SALINA HAYS

MADE R.F.B. DATE 2-15-83 TRACED
CHECKED S.A.C. DATE 2-18-83

124

COMPLETE BILL OF REINFORCING (WESTBOUND LANES)

NO.	SIZE	MARK	LOCATION	EPOXY	SHAPE	LENGTH	WEIGHT
			END BENTS				
16	#6	H1	Brg. Beam			8'-0"	192
8	#6	H2	Brg. Beam	E		8'-0"	96
8	#6	H3 *	Wingwall			8'-11"	107
4	#6	H4	Wingwall			7'-0"	42
4	#6	T1	Wingwall			9'-2"	55
18	#5	U1	Brg. Beam	E		9'-1"	171
18	#5	U2	Brg. Beam			9'-1"	171
8	#4	V1 *	Wingwall			7'-3"	39
			INT. BENTS				
42	#9	D1	Bott. of Col.			9'-2"	1309
6	#7	D2	Pile Caps			17'-0"	208
30	#7	U3	Pile Caps			8'-0"	491
27	#8	H5	Bent Caps	E		9'-10"	709
21	#5	H6	Bent Caps			7'-8"	168
65	#4	P1	Columns			8'-3"	358
32	#5	U3	Bent Caps	E		8'-11"	298
16	#5	U4	Bent Caps	E		9'-11"	165
14	#9	V2	Bent 2 Col.			24'-10"	1182
14	#9	V4	Bent 4 Col.			23'-5"	1115
14	#9	V6	Bent 3 Col.			24'-8"	1174
			SUPERSTRUCTURE				
221	#5	S1	Slab	E		8'-0"	1844
11	#5	S2	Slab	E		26'-7"	305
6	#11	S3	Slab	E		38'-2"	1217
10	#11	S4	Slab	E		27'-6"	1461
5	#10	S5	Slab	E		15'-0"	323
11	#5	S6	Slab	E		20'-9"	238
6	#11	S7	Slab	E		39'-11"	1273
5	#10	S8	Slab	E		17'-3"	371
11	#5	S9	Slab	E		17'-9"	204
6	#11	S10	Slab	E		35'-8"	1137
5	#10	S11	Slab	E		19'-0"	409
5	#8	S12	Slab	E		5'-3"	70
11	#5	S13	Slab	E		22'-4"	256
22	#6	S14	Slab	E		8'-0"	264
18	#4	S15	Pvmt. Rest			2'-3"	27
2	#4	S16	Pvmt. Rest			8'-0"	11
6	#11	S17	Slab			46'-8"	1488
10	#8	S18	Slab			19'-0"	507
5	#9	S19	Slab			34'-1"	579
6	#11	S20	Slab			60'-1"	1915
5	#9	S22	Slab			34'-0"	578
6	#10	S23	Slab			56'-1"	1448
5	#8	S24	Slab			18'-3"	244
5	#9	S25	Slab			31'-3"	531
6	#9	S26	Slab			40'-9"	831
5	#7	S27	Slab			15'-9"	161
5	#9	S28	Slab			31'-1"	528
6	#7	S29	Edge Beam			45'-5"	557
6	#8	S30	Edge Beam			58'-0"	929
6	#8	S31	Edge Beam			55'-0"	881
6	#7	S32	Edge Beam			40'-5"	496
221	#5	S33	Slab			8'-0"	1844

*Series Bar

NO.	SIZE	MARK	LOCATION	EPOXY	SHAPE	LENGTH	WEIGHT
			BARRIER CURB				
206	#5	R1	Bar. Curb	E		3'-4"	716
20	#5	R2	Bar. Curb	E		3'-6"	73
186	#5	R3	Bar. Curb	E		3'-1"	598
206	#5	R4	Bar. Curb	E		2'-9"	591
206	#5	R5	Bar. Curb	E		2'-9"	591
12	#5	R6	Bar. Curb	E		7'-8"	96
12	#5	R7	Bar. Curb	E		31'-5"	393
36	#5	R8	Bar. Curb	E		9'-8"	363
6	#5	R9	Bar. Curb	E		34'-8"	217
6	#5	R10	Bar. Curb	E		26'-5"	165

COMPLETE BILL OF REINFORCING (EASTBOUND LANES)

NOTE: The Bill of Reinforcing Steel for the Eastbound Lanes is identical to the Bill of Reinforcing Steel for the Westbound Lanes, except for the following:
Delete the #4P1, #9V2, #9V4 & #9V6 bars as shown and add the following bars:

NO.	SIZE	MARK	LOCATION	EPOXY	SHAPE	LENGTH	WEIGHT
			INT. BENTS				
58	#4	P1	Columns			8'-3"	320
14	#9	V3	Bent 2 Col.			22'-10"	1087
14	#9	V5	Bent 4 Col.			21'-5"	1019
14	#9	V7	Bent 3 Col.			21'-8"	1031

BENDING DIAGRAMS

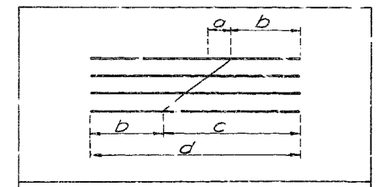

REMARKS	a	b	c	d
4 H3 Cut 16	13"	2'-10"	6'-1"	8'-11"
4 V1 Cut 20	11"	2'-3"	5'-0"	7'-3"

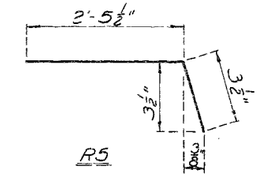

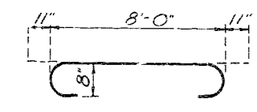

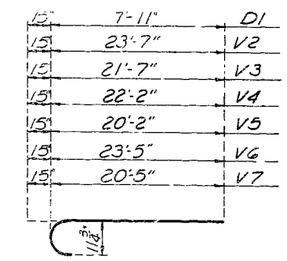

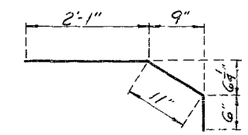

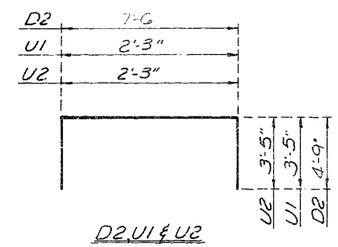

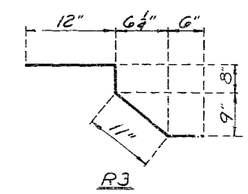

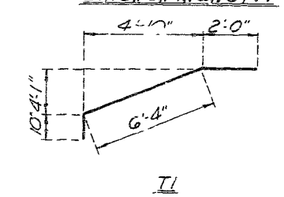

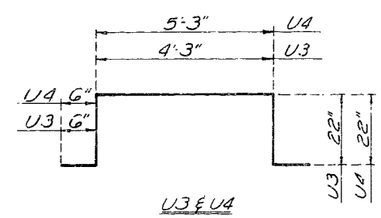

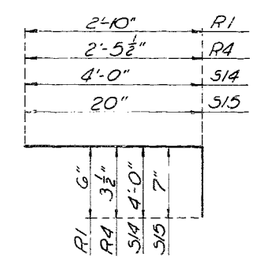

Note: All dimensions are out to out of bar unless otherwise noted.
Quantities shown are for widening of the Westbound lanes except as noted.

NOTE: This contract includes the Westbound structure only. All work relating to the Eastbound structure is not included in this contract.

JACKSON COUNTY, MISSOURI

BILL OF REINFORCING STEEL

HOLMES ROAD

BUCHER WILLIS
CONSULTING ENGINEERS, PLANNERS, & ARCHITECTS
SALINA HAYS KANSAS CITY

MADE SKH DATE 2-15-83 TRACED D A C DATE 2-16-83
CHECKED A.C. DATE 2-18-83 SCALE None

125

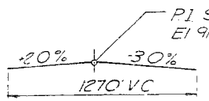

Twin 43.00'-55.00'-52.00'-39.00' Continuous Slab Spans (Voided)

NOTE: This contract includes the Eastbound structure only. All work related to the Westbound structure is not included in this contract.

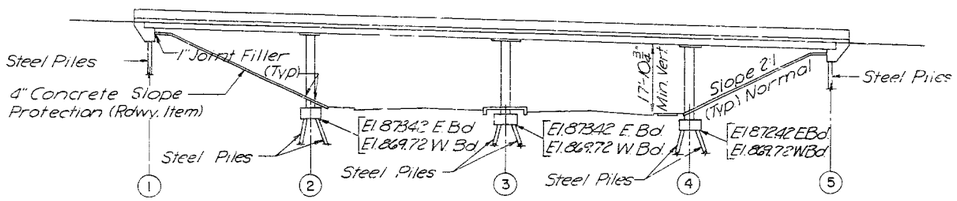

GENERAL ELEVATION
(Scale: 1" = 20')

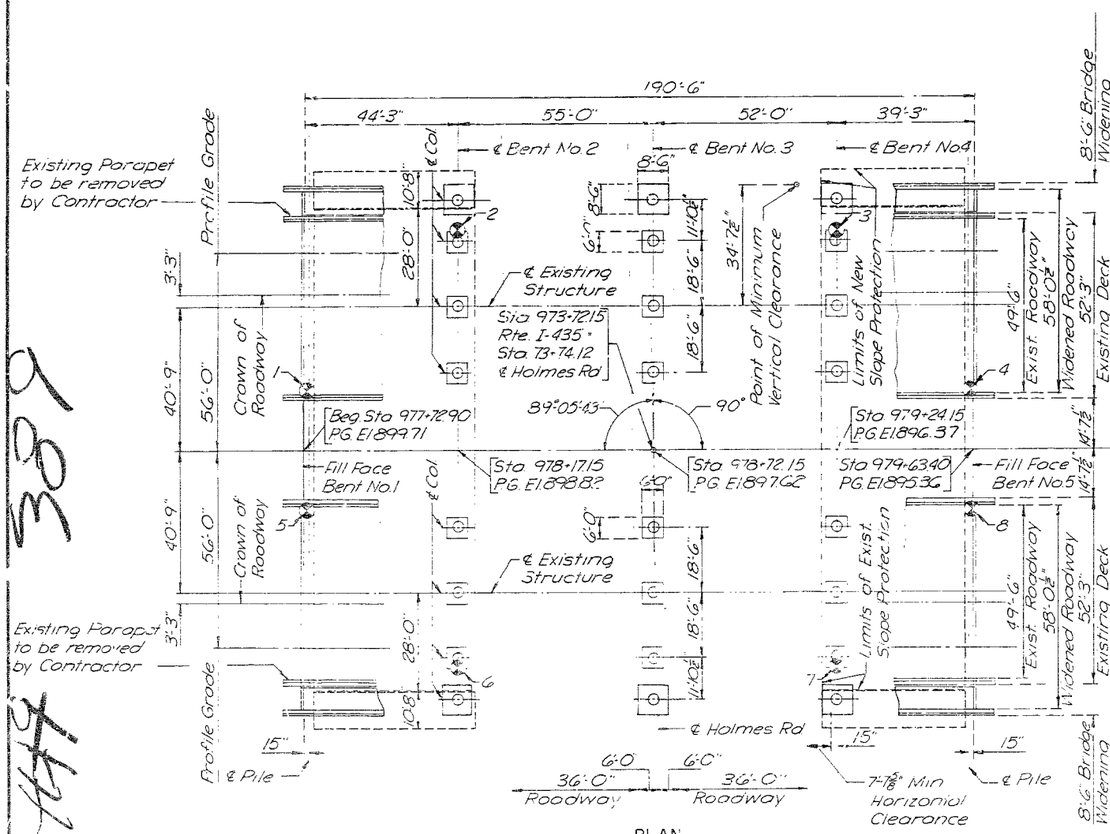

PLAN
(Scale 1" = 20')

GENERAL NOTES

Design Specifications:
A.A.S.H.T.O.-1977, Interim '78, '79, '80, '81
Working Stress Design

Design Loading:
HS20-44
Modified 24,000# Tandem Axle
Earth 120#, Equivalent Fluid Pressure 30#

Design Unit Stresses:
Class B1 Concrete (substructure & barrier curb) f'_c = 4,000 p.s.i.
Class B2 Concrete (deck slab) f'_c = 4,000 p.s.i.
Reinforcing Steel (Grade 60) f_y = 60,000 p.s.i.
Steel Pile f_b = 9,000 p.s.i.

Boring Data:
For Boring Data see Boring Data and Estimated Quantities Sheet
"⊗" indicates location of boring.

Bench Mark:
Elev. 192.77 Kansas City, Missouri Standard Horizontal Control Monument #199 = Elev. 915.07 U.S.G.S. Datum.
Plan Elevations shown are U.S.G.S. Datum.

Removal of Existing Structure:
Outline of old work is indicated by light dashed lines on the detail sheets. Heavy lines indicate new work. Removal Limits of existing structure are shown in crosshatching. After removing existing barrier curb, saw cut slab 2" deep along a line 16½" from the outside of the deck. The contractor shall leave all existing deck reinforcement in place.

Excavation:
Pay limits for excavation quantities are measured from the existing ground line.

Reinforcing Steel:
Minimum clearance to reinforcing steel shall be 1½" unless otherwise noted.

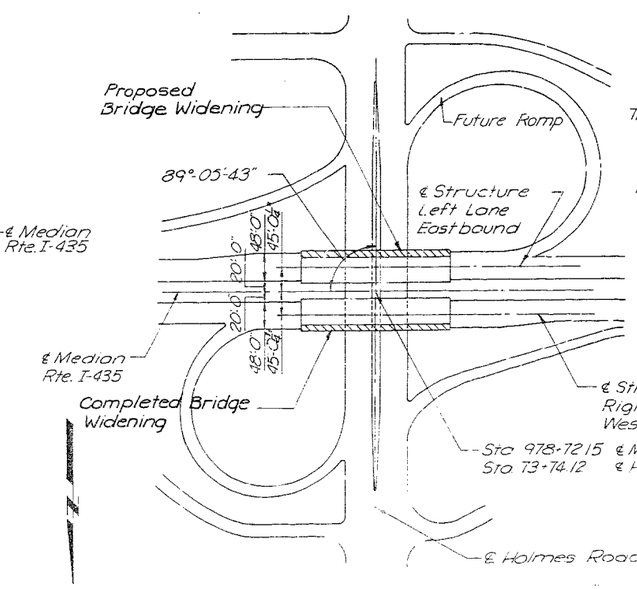

LOCATION SKETCH
(No Scale)

Concrete Voided Slab:
The contractor shall pour and satisfactorily finish the concrete roadway slab at a rate of not less than 25 cubic yards per hour.
If the contractor cannot place the slab in one continuous pour, construction joints shall be placed at locations as approved by the Engineer.
Finish each side of the optional joint with ¼" edging tool.
Tubes for producing voids shall have an outside diameter of 14.0" and shall be anchored at not more than 4'-0" centers. Fiber tubes shall have a wall thickness of not less than 0.250".
One ¾"ø weepholes shall be provided near the ends of each void. Weepholes shall be placed in straight lines parallel to bent.
The cross-slope and elevation of the 2'-1" uniform slab shall be varied as required to match the overlaid existing slab and provide a uniform wearing surface across the junction of the new and existing slabs. The thickness of the new drop panel may vary as required by maintaining the top of column elevation as shown on the plans and providing the necessary drop panel thickness to accommodate the resulting bottom of new deck elevation.

Construction Specifications:
Current issue of Missouri Standard Specifications for Highway Construction.

Safety Barrier Curb:
Top of safety barrier curb shall be built parallel to grade with barrier curb joints normal to grade.
All exposed edges of safety barrier curb shall have ½" radius or ¾" bevel unless otherwise noted.
Plastic waterstop shall be placed in all safety barrier curb filled joints.
Cost of plastic waterstop complete in place shall be included in the bid price for concrete.

Surface Seal:
Superstructure deck surface shall be sealed in accordance with Section 703.3.18 of the Standard Specifications.

Traffic Maintained:
Traffic over structure to be maintained during construction.

Falsework:
Falsework over existing lanes should be constructed with a minimum vertical clearance of 14' from crown of existing lanes and a minimum lateral clearance of 2 feet beyond edge of pavement.

BRIDGE OVER HOLMES ROAD

STATE ROAD FROM KANSAS STATE LINE TO RTE. 71
ABOUT 1.4 MILES EAST OF KANSAS STATE LINE
PROJECT NO. STA. 977+72.90
JOB NO. 4-I435-713 RTE. I-435
JACKSON COUNTY
DATE 2/9/60

A-1662RI

JACKSON COUNTY, MISSOURI

GENERAL PLAN AND ELEVATION

HOLMES ROAD BRIDGE NO. A-1662RI

BUCHER, WILLIS & RATCLIFF
CONSULTING ENGINEERS, PLANNERS & ARCHITECTS
SALINA HAYS KANSAS CITY

MADE S.D.C. DATE 2-15-63 TRACED D.A.C. DATE 2-16-83
CHECKED S.A.C. DATE 2-18-83 SCALE As Noted

SHEET NO. 1 of 10

File No. 217-9

389

44

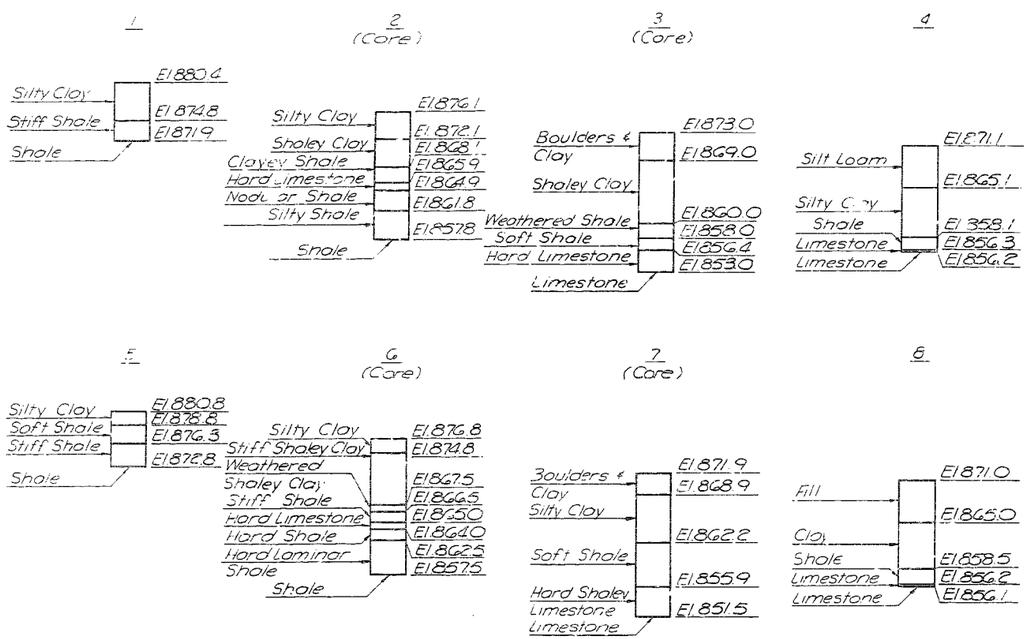

BORING DATA

Note: For location of Borings see General Plan & Elevation Sheet

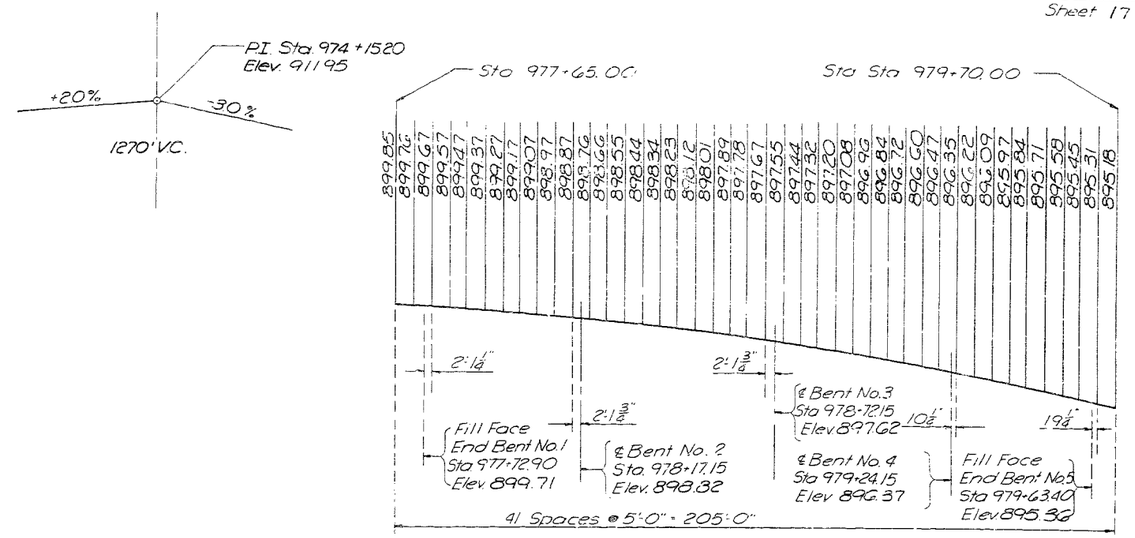

PROFILE GRADE ELEVATIONS

Note: The profile grade shown is the theoretical profile grade of I-435 as obtained from the original construction plans. These elevations should not be used for construction as the existing elevations do not agree with this profile.

NOTE: This contract includes the Eastbound structure only. All work relating to the Westbound structure is not included in this contract.

* Removal of Concrete shall include detailed removal of existing wings, curbs, parapets, slab, and other areas as directed by the engineer. Removal and Placement of concrete for full depth repair and half-soling shall be included in contract unit price bid for these items.

PILE DATA

BENT NO.	END BENT NO. 1		INT. BENT NO. 2		INT. BENT NO. 3		INT. BENT NO. 4		END BENT NO. 5	
LANE	E Bd	W Bd	E Bd	W Bd	E Bd	W Bd	E Bd	W Bd	E Bd	W Bd
Pile Type and Size	HP10×42		HP10×42		HP10×42		HP10×42		HP10×42	
Number	2	2	4	4	4	4	4	4	2	2
Approximate Length Ft.	33	33	12	12	19	19	19	19	39	39
Bearing [illegible]	20	[illegible]	[illegible]	48	48	[illegible]	[illegible]	[illegible]	29	29
Hammer Energy Reqd. Lbs.	10000	10000	14900	14900	10800	10000	14900	14900	[illegible]	17000

Note: Minimum energy requirement of the hammer based on plan length and design bearing value of the piles.
All piles shall be driven to practical refusal.

ESTIMATED QUANTITIES

	ITEM		EASTBOUND	WESTBOUND	TOTAL
	Removal & Replacement of Det. Conc.	Sq. Ft.	51		
*	Removal of Concrete	Cu. Yd.	21.8		
	Class I Excavation	Cu. Yd.	71.0		
	Structural Steel Pile (10")	Lin. Ft.	344		
	Class B1 Concrete	Cu. Yd.	58.1		
	[illegible]	Cu. Yd.	109.8		
	Elastomeric Expansion Joint Seal	Lin. Ft.	191		
	Reinforcing Steel (Grade 60)	Lbs.	21,023		
	Reinforcing Steel (Gr. 60) Epoxy Coated	Lbs.	15,152		
	Epoxy Resin Crack Repair	Lin. Ft.	14		
	Repairing Conc. Deck (Half-soling)	Sq. Ft.	253		
	Low Slump Conc. Wearing Surface	Sq. Yd.	1048		

JACKSON COUNTY, MISSOURI

BORING DATA AND ESTIMATED QUANTITIES

HOLMES ROAD — BRIDGE NO. A-1662R1

BOUCHER & WILLIS
CONSULTING ENGINEERS, PLANNERS & ARCHITECTS
SALINA — HAYS — KANSAS CITY

MADE S.A.C. DATE 2-15-83 TRACED D.A.C. DATE 2-16-83
CHECKED S.K.M. DATE 2-16-83 SCALE No Scale

HD 390

NOTE: This contract includes the Eastbound structure only. All work relating to the Westbound structure is not included in this contract.

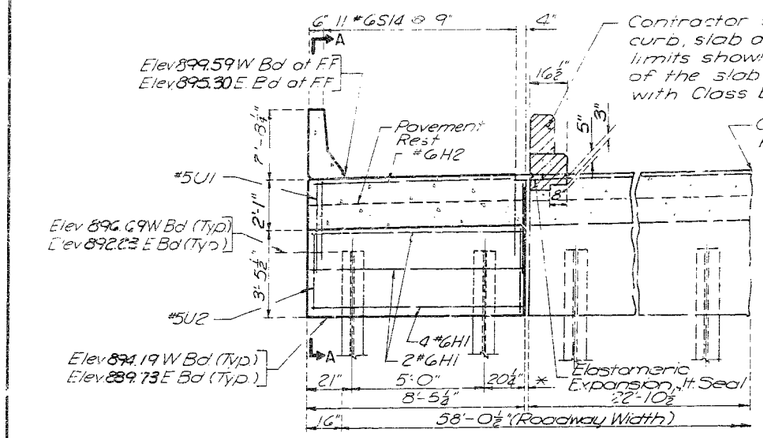

ELEVATION

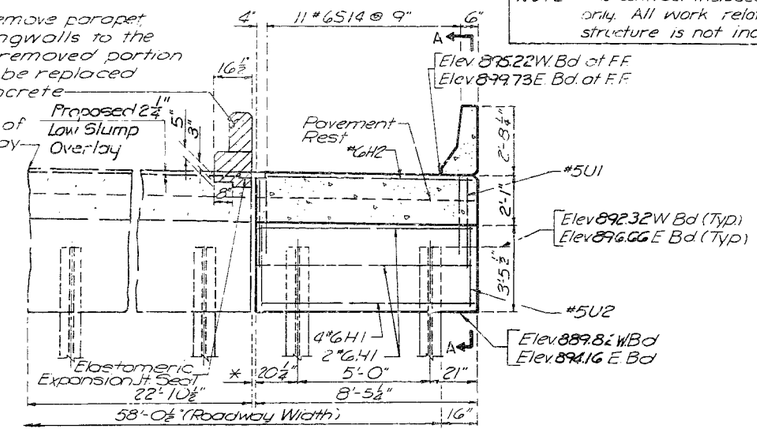

ELEVATION

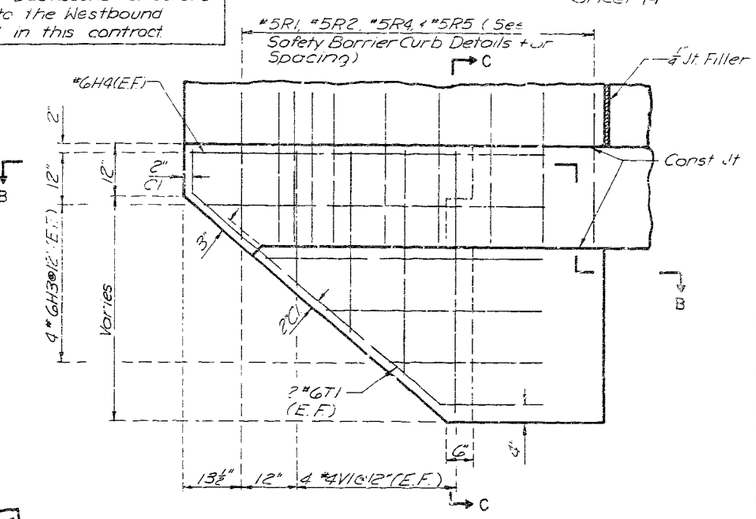

ELEVATION OF WING
(Scale: ¾" = 1'-0")

* Place a ¾" joint filler (Standard Specification 1057.2.4) between old and new concrete in the end bents. This material shall not be paid for directly but shall be considered subsidiary to other items.

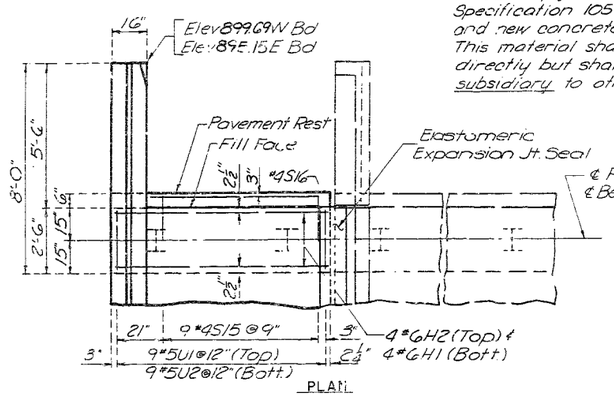

PLAN

~~WESTBOUND END BENT NO. 1~~
EASTBOUND END BENT NO. 5
(Scale: ⅜" = 1'-0")

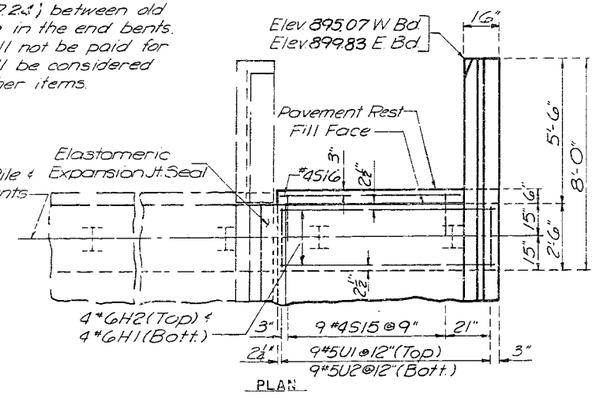

PLAN

~~WESTBOUND END BENT NO. 5~~
EASTBOUND END BENT NO. 1
(Scale: ⅜" = 1'-0")

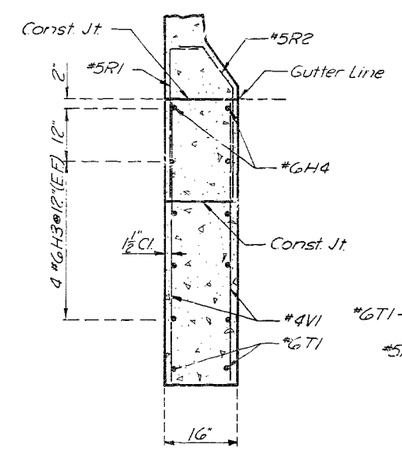

SECTION C-C
(Scale: ¾" = 1'-0")

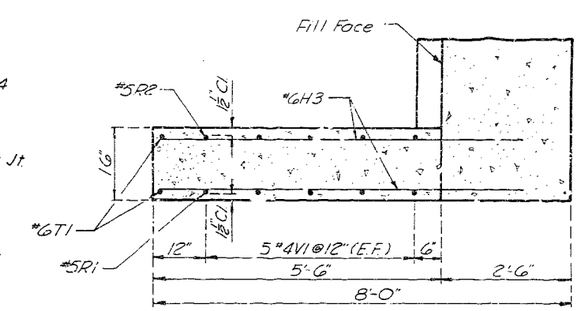

SECTION B-B
(Scale: ¾" = 1'-0")

REMOVAL AND REPLACEMENT OF DETERIORATED CONCRETE		
LOCATION	DESCRIPTION	QUANTITY (S.F.)
~~Bent No. 5 W. Bd. Br.~~	~~2'-0" x 8" South Face~~	
~~Bent No. 1 W. Bd. Br.~~	~~2'-0" x 40" South Face~~ ~~8" x 12" North Face~~	
Bent No. 5 E. Bd. Br.	4'-6" x 2'-0" South Face 3'-0" x 3'-8" North Face	20.0
Bent No. 1 E. Bd. Br.	2'-0" x 4'-0" South Face 2'-3" x 4'-0" North Face	17.0
TOTAL (E. Bd. Br.)		37.0

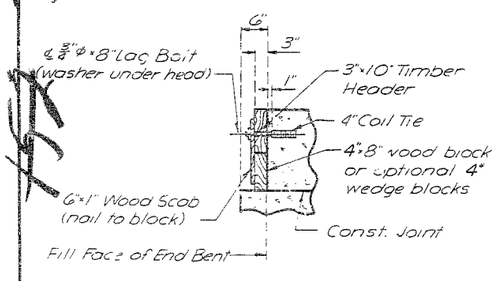

SECTION D-D

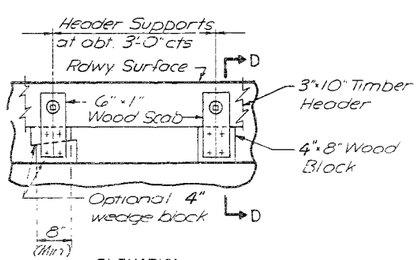

ELEVATION

TIMBER HEAD
(No Scale)

Note: Cost of timber headers complete in place shall be included in the bid price for concrete.

EPOXY RESIN CRACK REPAIR		
LOCATION	DESCRIPTION	QTY (L.F.)
~~Bent No. 5~~ ~~W. Bd. Br.~~	~~7'-0" x 6"~~ ~~North Face~~	~~[illegible]~~
TOTAL		~~[illegible]~~

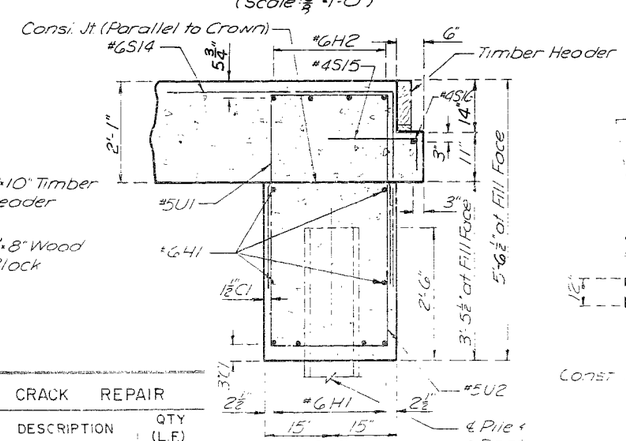

SECTION A-A
(Scale: ¾" = 1'-0")

Contractor to remove existing wings on the South side of the E Bd Lanes and the North side of the W Bd Lanes to the limits shown.

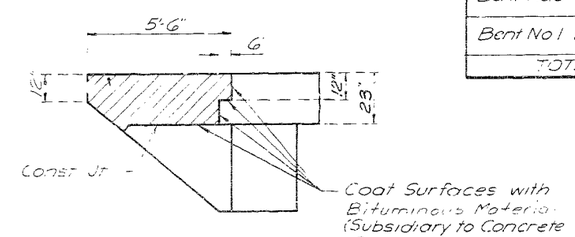

WINGWALL REMOVAL
(Scale: ¾" = 1'-0")

SHEET NO. 4 OF 10

JACKSON COUNTY, MISSOURI

END BENTS NO. 1 AND NO. 5 DETAILS

HOLMES ROAD — BRIDGE NO. A-1662R1

BLACKLEY & WILLS
CONSULTING ENGINEERS PLANNERS & ARCHITECTS
SALINA HAYS KANSAS CITY

MADE D.L.C. DATE 2-15-83 TRACED D.A.C. DATE 2-16-83
CHECKED S.A.C. DATE 2-18-83 SCALE As Noted

File No. 217-9

Sheet 18

FED. ROAD DIST. NO.	STATE	FED. AID PROJ. NO.	FISCAL YEAR	SHEET NO.	TOTAL SHEETS
5	MO.		19		

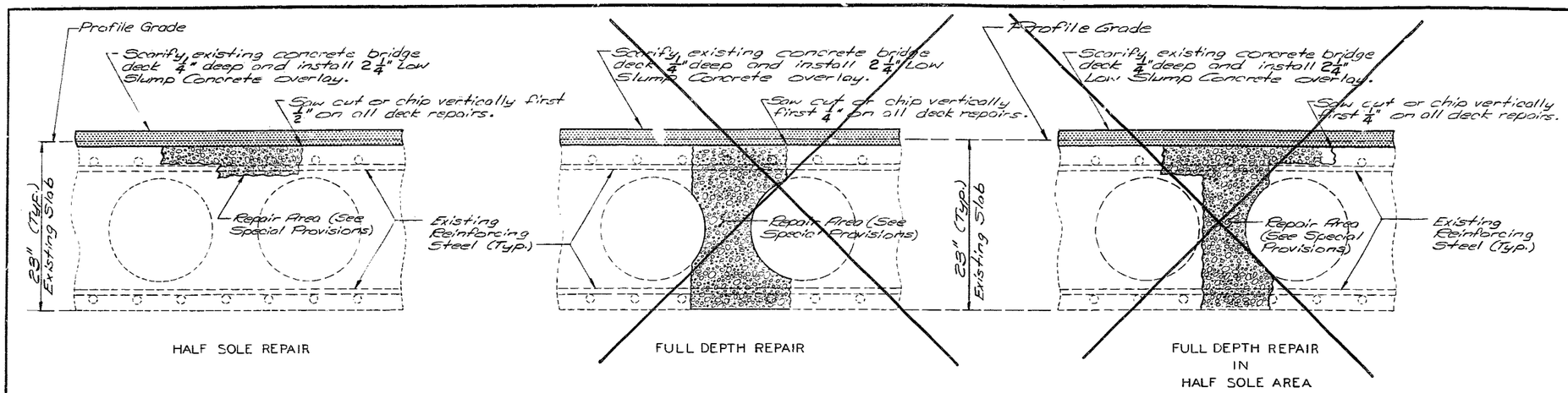

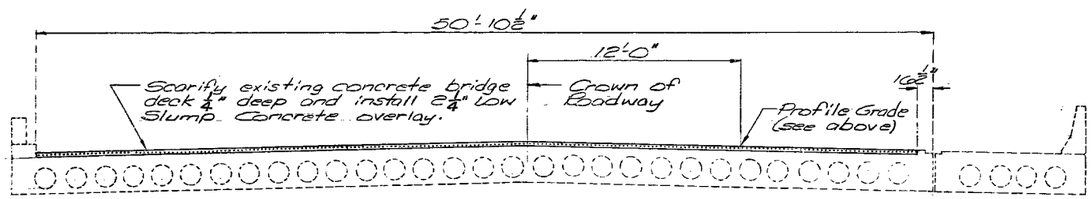

SECTION THRU SLAB

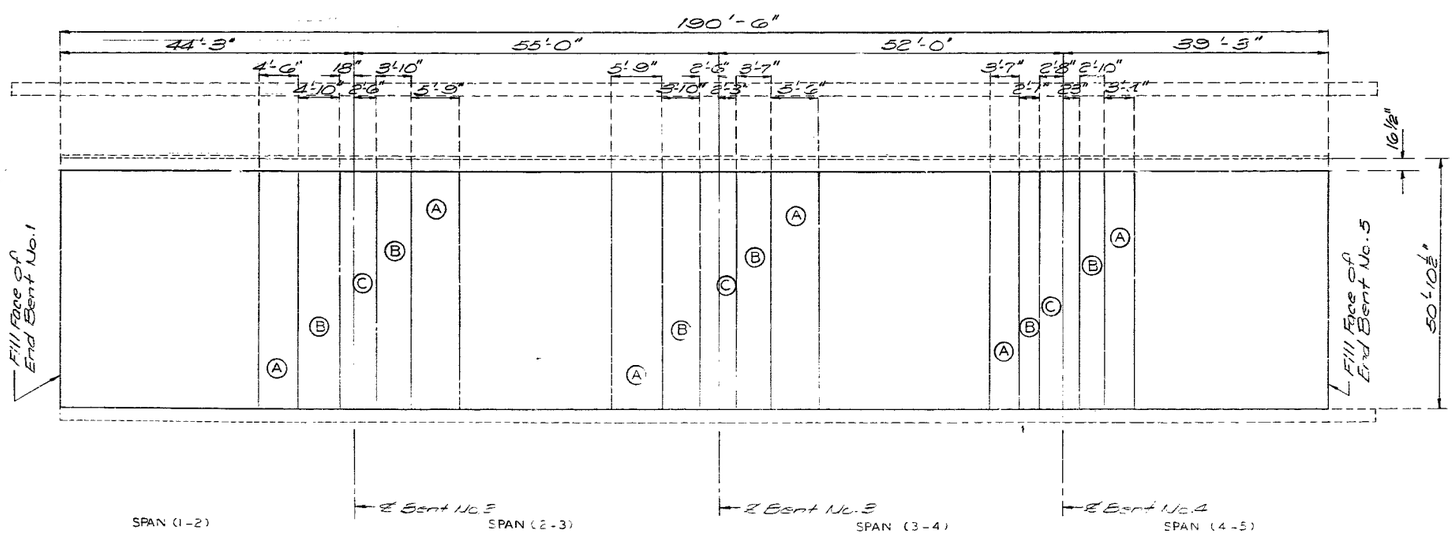

PLAN

Note: Any concrete removal for half-sole repair or full-depth repair in areas designated "B", "C" or "D" shall be repaired in alphabetical order. (See Special Provisions)

JOB NO. 4-I-435-713

SPECIAL REPAIR AREAS

Note: This drawing is not to scale. Follow dimensions.

SHEET NO. 3 of 10.

JACKSON COUNTY

A-1662R1

File No. 217-9

HH 372

Note: Dimensions pertaining to column heights & reinforcement are taken at the ℄ of the column.

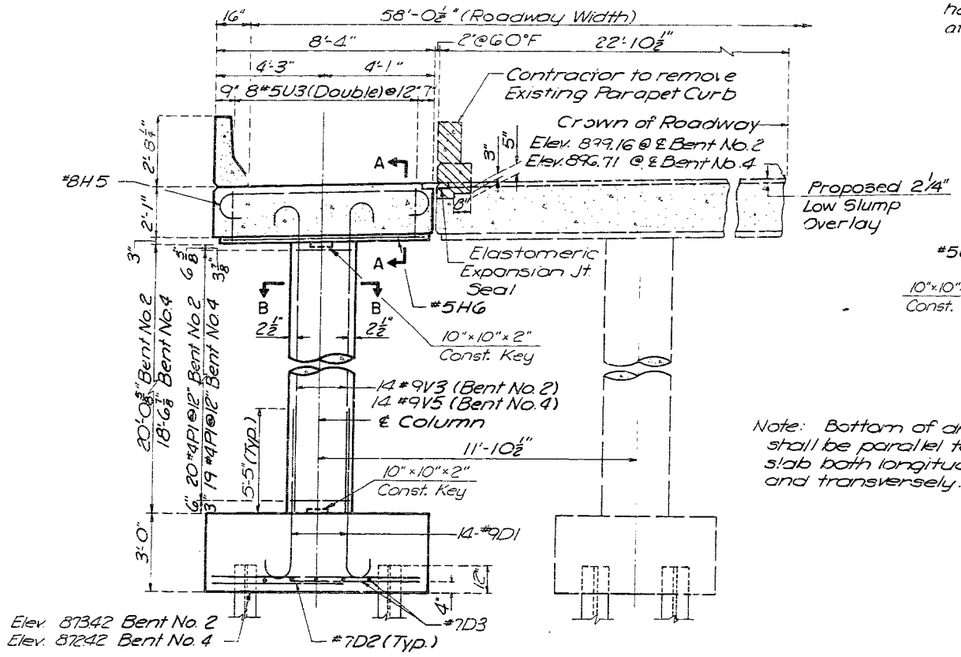

ELEVATION

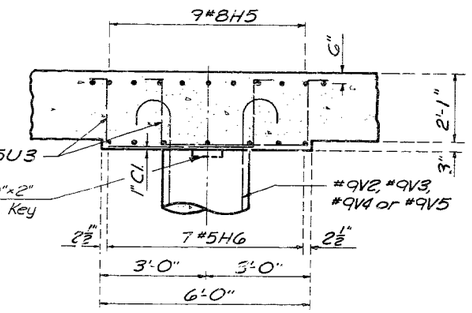

SECTION A-A
(Scale: ½" = 1'-0")

Note: Bottom of drop panel shall be parallel to top of slab both longitudinally and transversely.

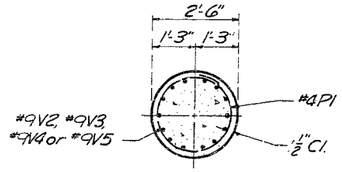

SECTION B-B
(Scale: ½" = 1'-0")

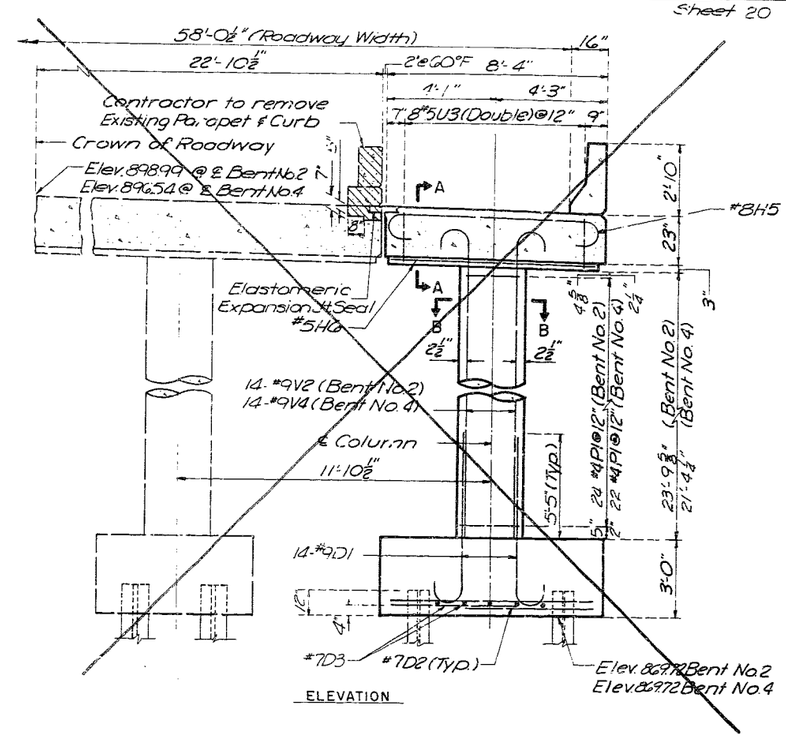

ELEVATION

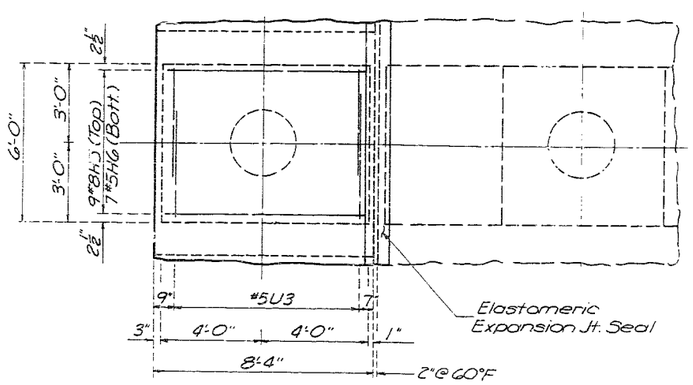

PLAN

EASTBOUND LANES
(Scale: ⅜" = 1'-0")

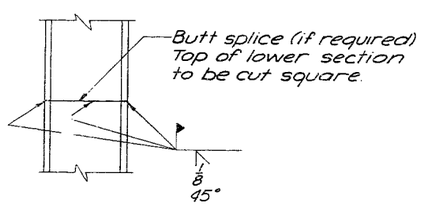

STEEL PILE SPLICE
(No Scale)

Note: For Pile Cap Plan see Intermediate Bent No. 3 Detail Sheet.

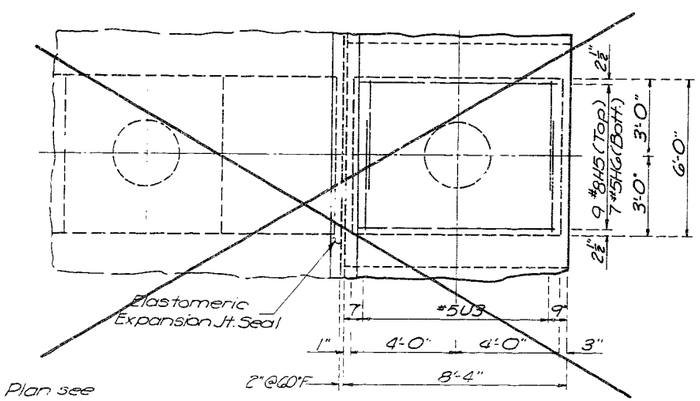

PLAN

~~WESTBOUND LANES~~
(Scale: ⅜" = 1'-0")

REMOVAL AND REPLACEMENT OF DETERIORATED CONCRETE		
LOCATION	DESCRIPTION	QUANTITY (S.F.)
Bent No. 2 E. Bd. Br.	6"×3'-0" South Face	1.5
~~Bent No. 2 W. Bd. Br.~~	~~12"×12" South Face~~	
Bent No. 2 E. Bd. Br.	2'-6"×1'-0" North Face	2.5
TOTAL (E. Bd. Br.)		4.0

EPOXY RESIN CRACK REPAIR		
LOCATION	DESCRIPTION	QTY. (L.F.)
~~Bent No. 4 W. Bd. Br.~~	~~1@3'-0" South Face~~	
~~Bent No. 2 W. Bd. Br.~~	~~1@18" South Face~~ ~~1@12" North Face~~	
Bent No. 4 E. Bd. Br.	1@12" South Face 1@2'-0" North Face	3
Bent No. 2 E. Bd. Br.	1@12" South Face 1@4'-6" North Face	6
TOTAL (E. Bd. Br.)		9

NOTE: This contract includes the Eastbound structure only. All work relating to the Westbound structure is not included in this contract.

SHEET NO. 5 of 10

JACKSON COUNTY, MISSOURI

INTERMEDIATE BENTS NO. 2 AND NO. 4 DETAILS

HOLMES ROAD — BRIDGE NO. A-1662R1

BUSHER & WILLIS
CONSULTING ENGINEERS, PLANNERS & ARCHITECTS
SALINA — HAYS — KANSAS CITY

MADE S.K.H. DATE 2-15-83 TRACED D.M.B. DATE 2-16-83
CHECKED S.A.C. DATE 2-18-83 SCALE As Noted

File No. 217-9

~~153~~ 393

Sheet 2

NOTE: This contract includes the Eastbound structure only. All work relating to the Westbound structure is not included in this contract.

Note: Dimensions pertaining to column heights & reinforcement are taken at the ℄ of the column.

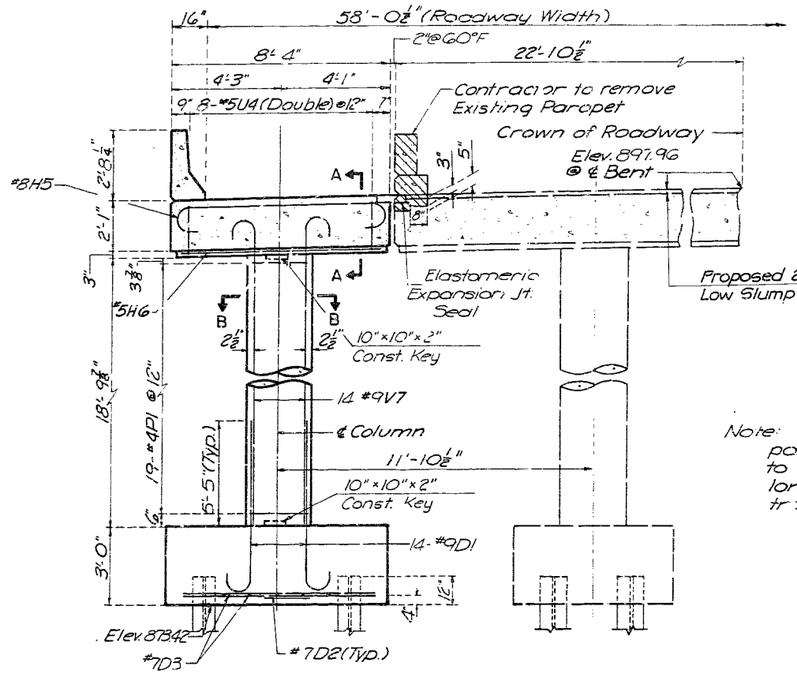

ELEVATION

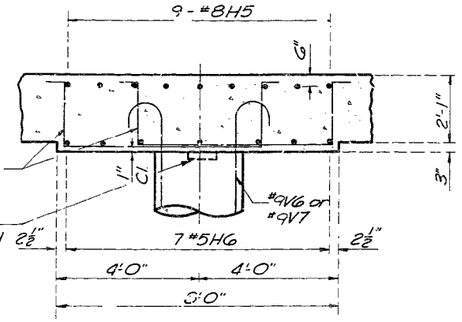

SECTION A-A
(Scale: ½" = 1'-0")

Note: Bottom of drop panel shall be parallel to top of slab both longitudinally and transversely.

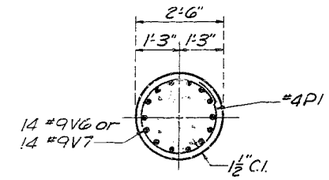

SECTION B-B
(Scale: ½" = 1'-0")

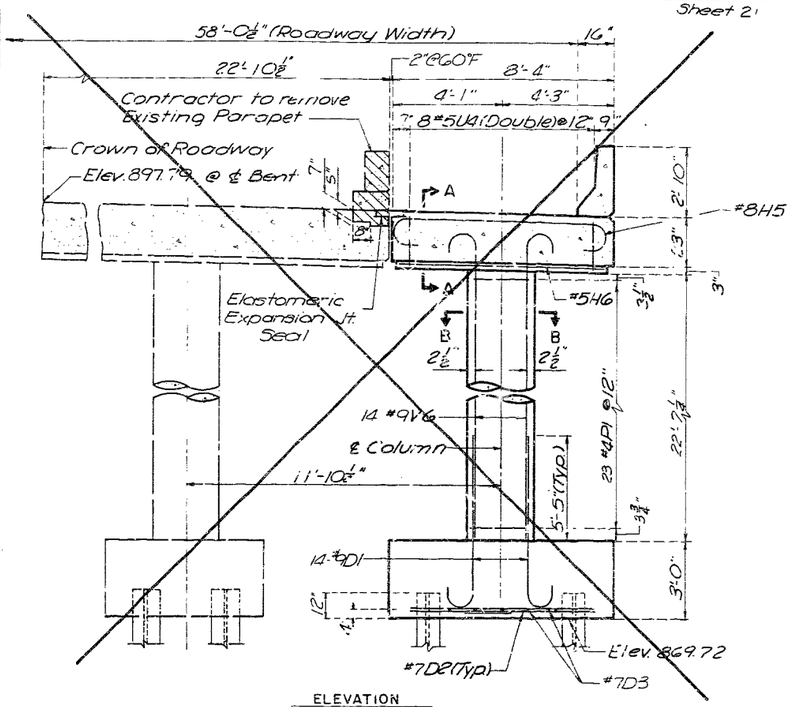

ELEVATION

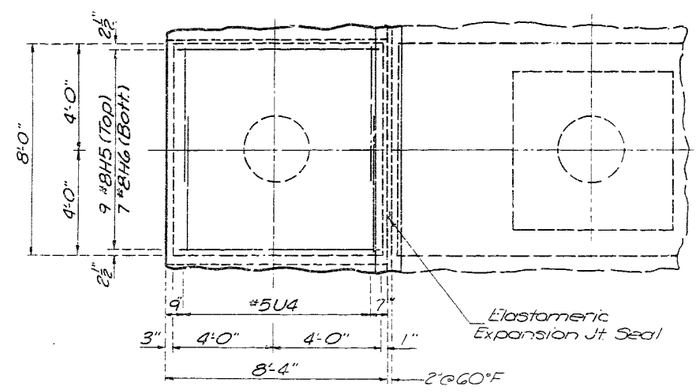

PLAN

EASTBOUND BENT NO. 3
(Scale: ⅜" = 1'-0")

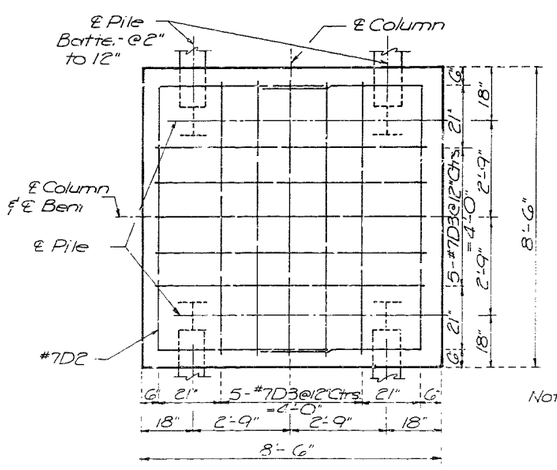

PILE CAP PLAN
(Scale: ½" = 1'-0")

Note: For Steel Pile Splice see intermediate Bents No. 2 & No. 4 Detail Sheet.

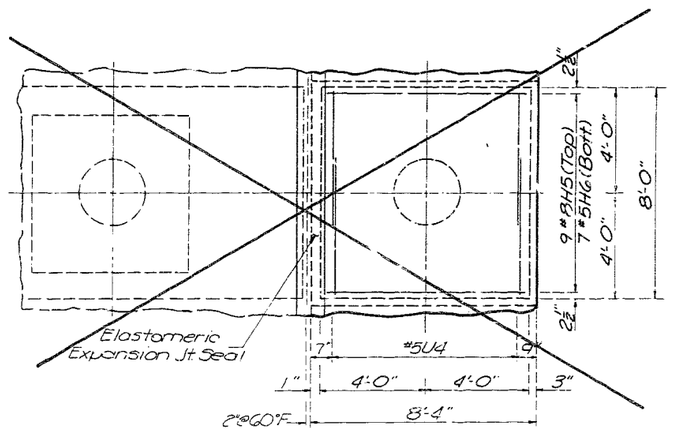

PLAN

~~WESTBOUND BENT NO. 3~~
(Scale: ⅜" = 1'-0")

REMOVAL AND REPLACEMENT OF DETERIORATED CONCRETE			
LOCATION	DESCRIPTION		QUANTITY (S.F.)
~~Bent No. 3 W. Bd. Br.~~	~~78"×2'-0"~~	~~South Face~~	
	~~16"×8"~~	~~North Face~~	
Bent No. 3 E. Bd. Br.	4'-0"×2'-0"	South Face	10.0
	1'-0"×2'-0"	North Face	
TOTAL (E. Bd. Br.)			10.0

EPOXY RESIN CRACK REPAIR		
LOCATION	DESCRIPTION	QTY. (L.F.)
Bent No. 3 Eastbound Br.	1 @ 5'-0" North Face	5
TOTAL (E. Bd. Br.)		5

SHEET NO. 6 of 10

JACKSON COUNTY, MISSOURI

INTERMEDIATE BENT NO. 3 DETAILS

HOLMES ROAD — BRIDGE NO. A-1662R1

BUSCH & WILLIS
CONSULTING ENGINEERS, PLANNERS & ARCHITECTS
SALINA — HAYS — KANSAS CITY

MADE SKH DATE 2-15-83 TRACED DMB DATE 2-16-83
CHECKED S.A.C. DATE 2-18-83 SCALE As Noted

File No. 217-9

394

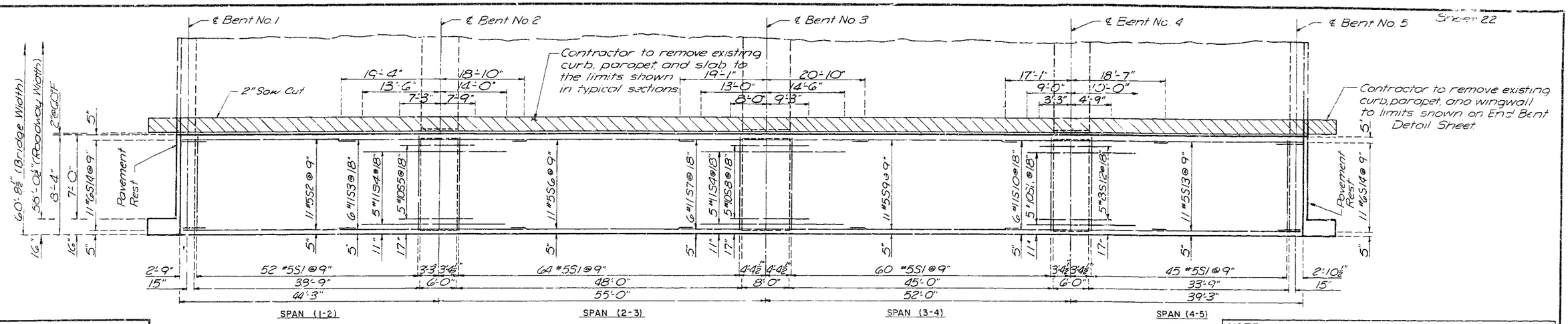

SLAB PLAN SHOWING TOP REINFORCING STEEL
(No Scale)

MINIMUM BAR LAPS		
SIZE	TOP BAR	OTHER THAN TOP BAR
#5	2'-5"	2'-2"
#7		2'-7"
#8		3'-3"
#9		3'-3"
#10		4'-1"
#11		5'-1"

NOTE : This contract includes the Eastbound structure only. All work relating to the Westbound structure is not included in this contract.

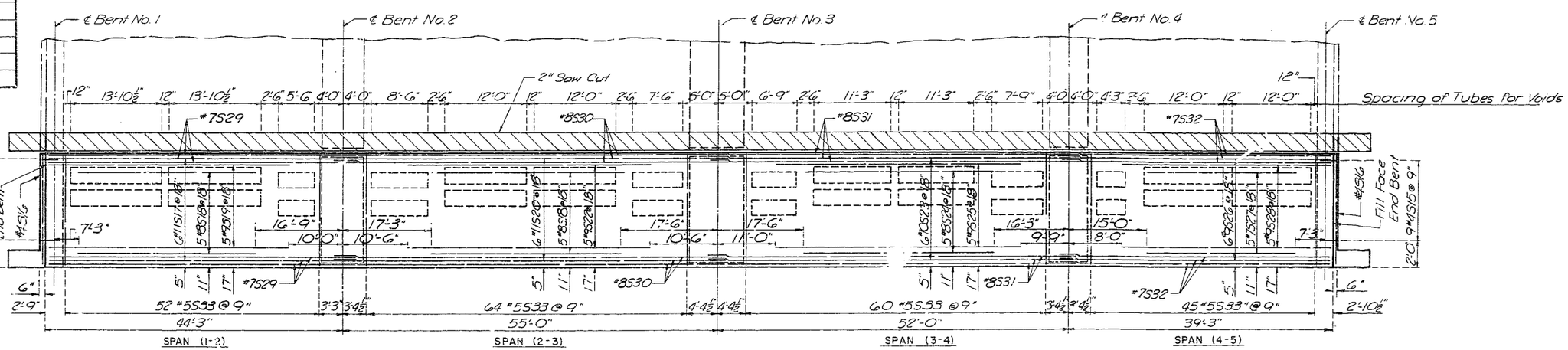

Note: Contractor to remove parapet, curb and slab to the limits shown. Removed portion of slab shall be replaced as Class B2 Concrete

SLAB PLAN SHOWING BOTTOM REINFORCING STEEL
(No Scale)

Note: For detail of weephole and optional construction joint see Safety Barrier Curb and Misc. Details Sheet.
For slab notes see General Plan & Elevation Sheet.
Steel shown is for westbound lane. Steel for eastbound lane will be reflective of the steel shown.
See Intermediate & End Bent detail sheets for additional steel at Bents.

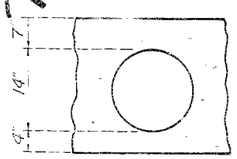

TYPICAL VOID DETAIL
(Scale 1"=1'-0")

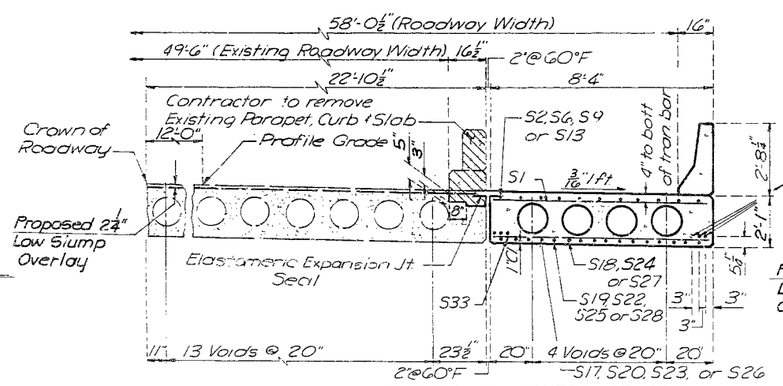

HALF SECTION AT CENTER OF SPAN
(Scale ⅜"=1'-0")

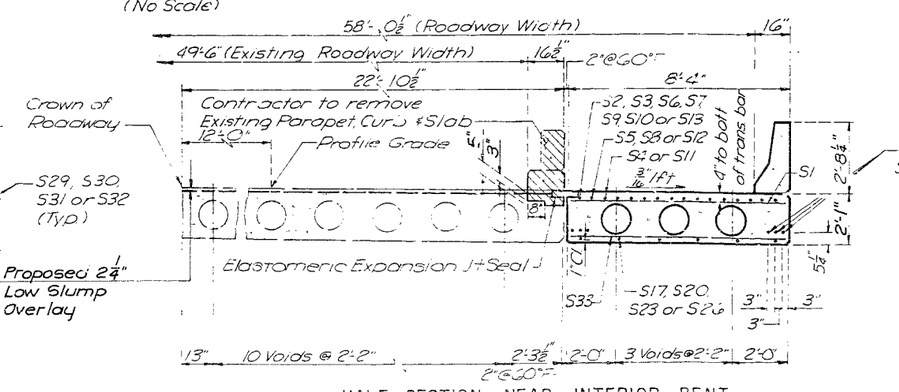

HALF SECTION NEAR INTERIOR BENT
(Scale ⅜"=1'-0")

SHEET NO. 7 of 10.

JACKSON COUNTY, MISSOURI

SLAB DETAILS

HOLMES ROAD — BRIDGE NO. A-1662R1

BLACKER & WILLS
CONSULTING ENGINEERS, PLANNERS & ARCHITECTS
SALINA — HAYS — KANSAS CITY

MADE S.K.H. DATE 2-15-83 TRACED D.A.C. DATE 2-16-83
CHECKED S.A.C. DATE 2-18-83 SCALE As Noted

File No. 217-9

395

154

NOTE : This contract includes the Eastbound structure only. All work relating to the Westbound structure is not included in this contract.

Note: Dimensions of the expansion device armor may vary with the type of expansion device selected. The actual dimensions used shall be those recommended by the manufacturer and approved by the Engineer. The top of the device shall be placed flush with the top of the slab.

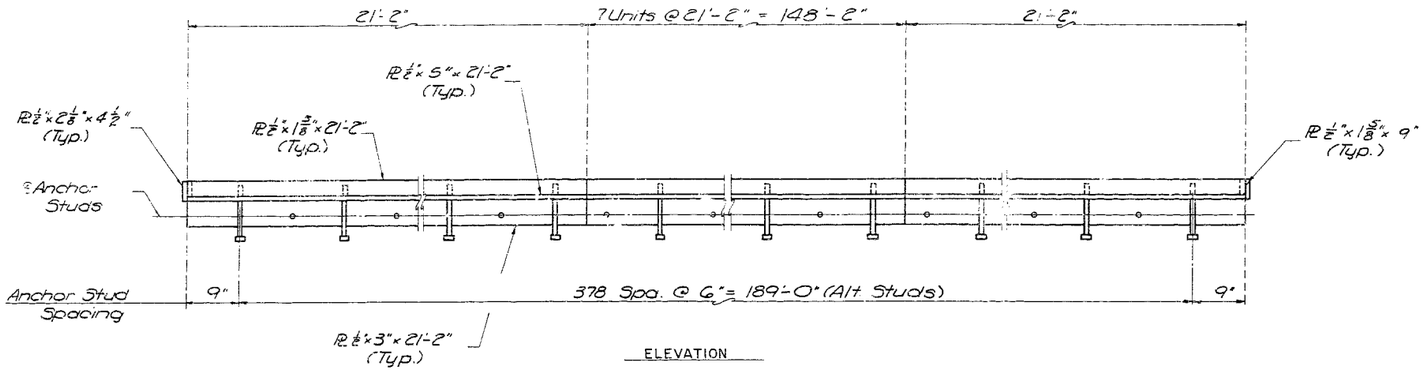

ELEVATION

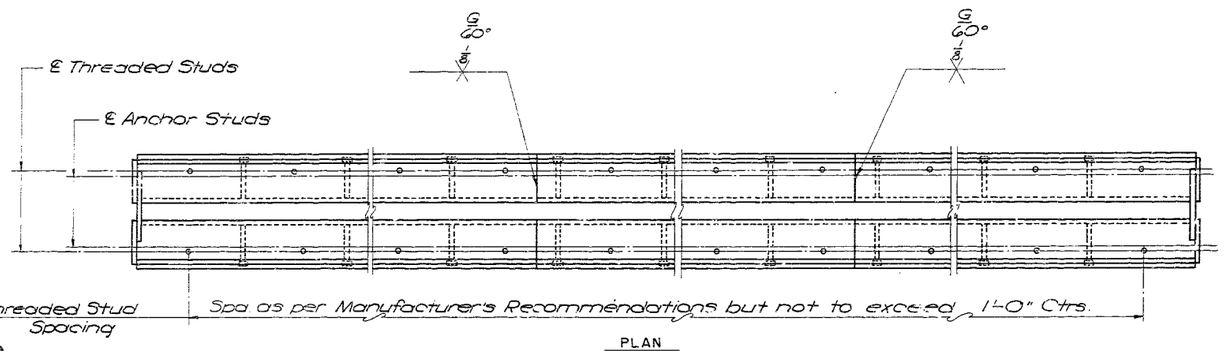

PLAN

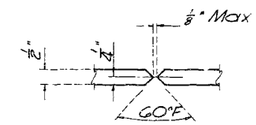

TYPICAL BEVEL WELD DETAIL
(No Scale)

TEMP.	TABLE
TEMP. (°F)	GAP (IN.)
110	1.90
100	1.92
90	1.94
80	1.96
70	1.98
60	2.00
50	2.02
40	2.04
30	2.06
20	2.08
10	2.10
0	2.12

Note: All 1/2" Plate, 1/2"ø Anchor Studs and 1/2"ø Threaded Studs shall be subsidiary to the bid item "Elastomeric Expansion Joint Seal."

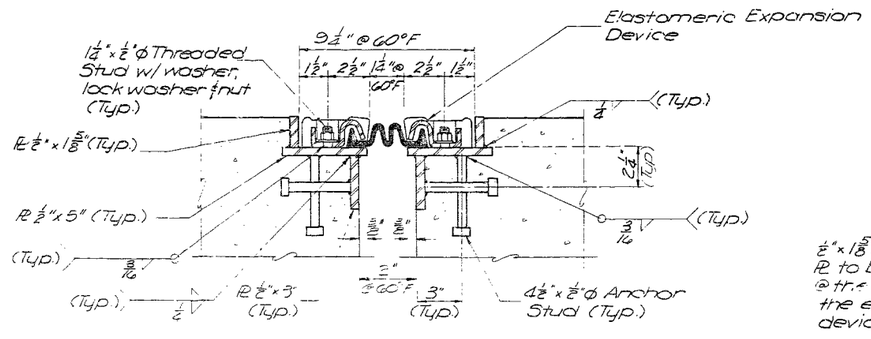

TYPICAL SECTION
(Scale: 3" = 1'-0")

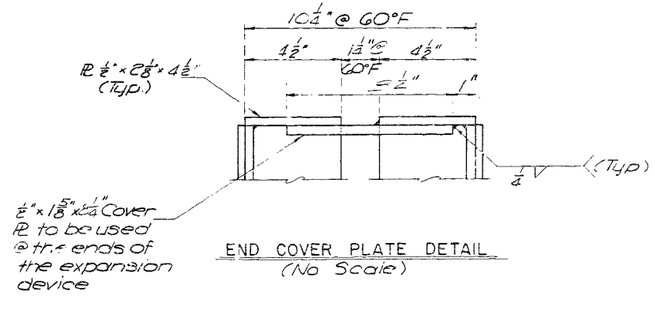

END COVER PLATE DETAIL
(No Scale)

Elastomeric expansion device shall be one of the following:

Acme Trojan TR300
Gen-Strip CCL2"
On-Flex 25 (E-Lastomer Panel)
Fel-Span T20 CS
Dolastiflex LM200
Wabo-Bendoflex 250

JACKSON COUNTY, MISSOURI

EXPANSION DEVICE DETAILS

HOLMES ROAD — BRIDGE NO. A-1662RI

BUCHER, WILLIS & RATCLIFF
CONSULTING ENGINEERS, PLANNERS, & ARCHITECTS
SALINA — HAYS — KANSAS CITY

MADE D.M.B. DATE 12-14-82 TRACED D.M.B./R.P.B. DATE 12-14-82
CHECKED R.W.P. DATE 12-14-82 SCALE As Noted

156 395

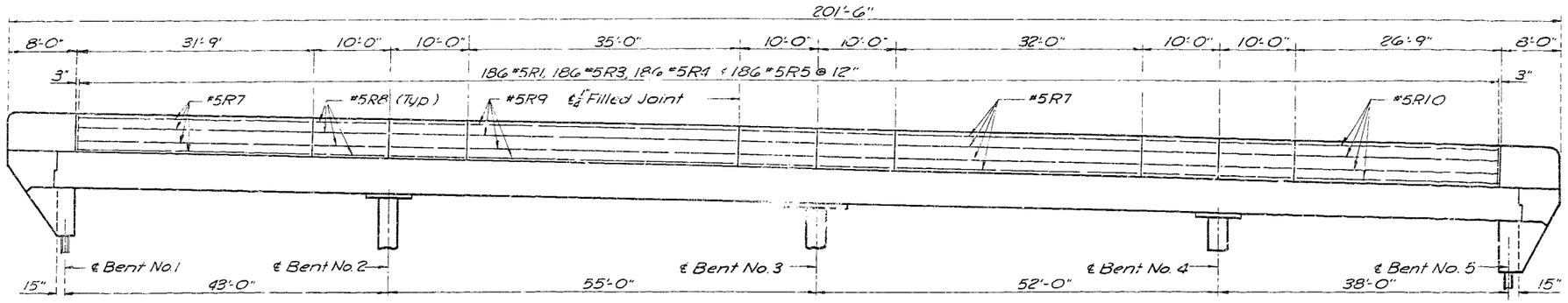

SAFETY BARRIER CURB ELEVATION
(No Scale)

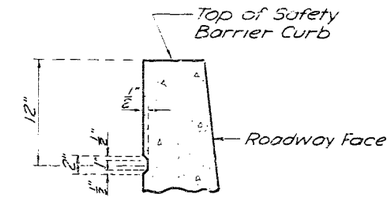

SAFETY BARRIER CURB RUSTICATION DETAILS
(Scale: 1 1/2" = 1'-0")

Note: Rustication shall end 3" from ℄ 1/4" joints and 4'-0" from the ends of the wingwalls.

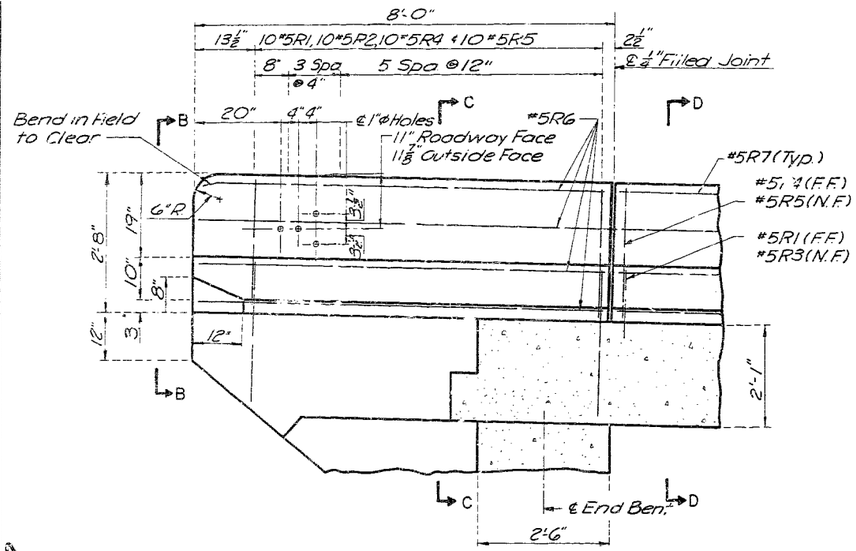

LONGITUDINAL SECTION AT END OF SAFETY BARRIER CURB
(Scale: 3/4" = 1'-0")

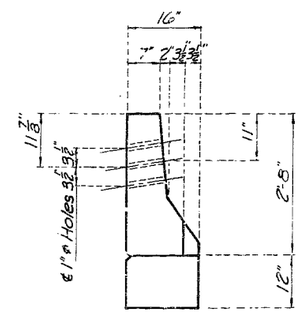

ELEVATION B-B
(Scale: 3/4" = 1'-0")

Note: For Safety Barrier Curb general notes see General Plan and Elevation Sheet.

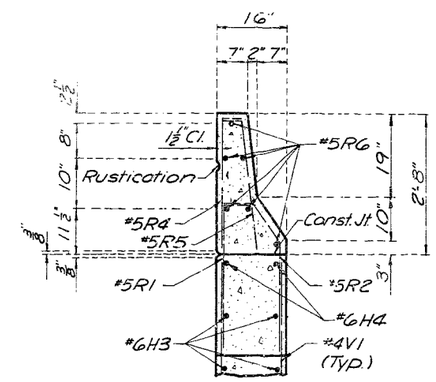

SECTION C-C
(Scale: 3/4" = 1'-0")

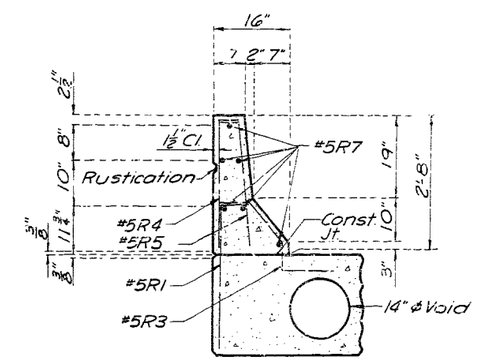

SECTION D-D
(Scale: 3/4" = 1'-0")

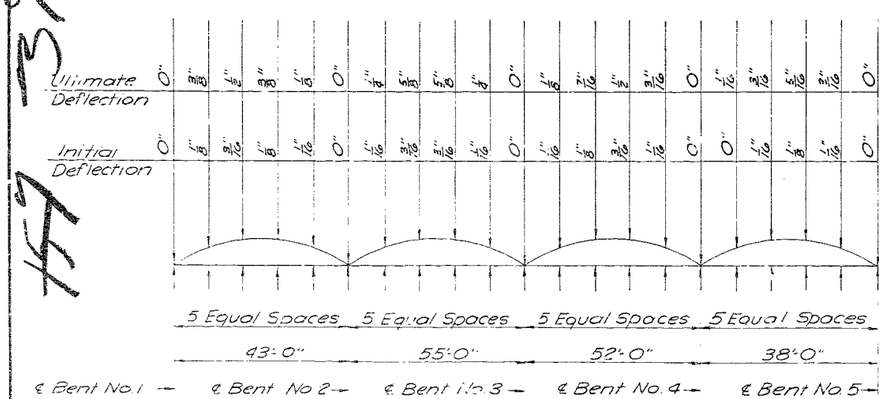

CAMBER DIAGRAM

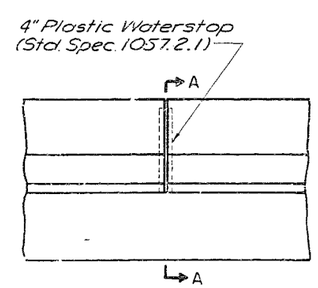

SAFETY BARRIER CURB ELEVATION

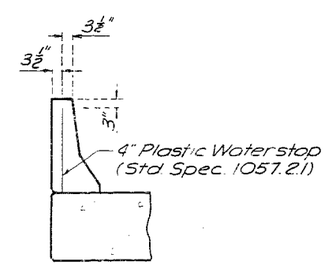

SECTION A-A

PLASTIC WATERSTOPS
(Scale: 1/2" = 1'-0")

NOTE: This contract includes the Eastbound structure only. All work relating to the Westbound structure is not included in this contract.

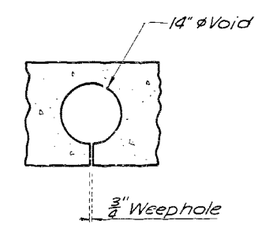

WEEPHOLE DETAIL
(Scale: 3/4" = 1'-0")

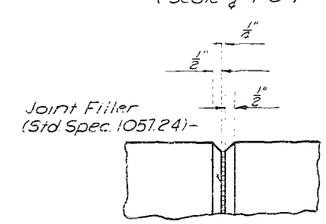

FILLED JOINT DETAIL
(Scale: 3" = 1'-0")

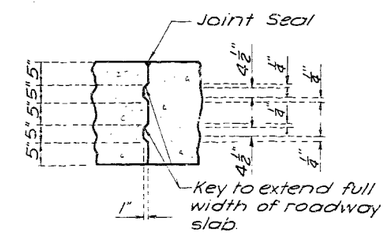

CONSTRUCTION JOINT KEY
(No Scale)

JACKSON COUNTY, MISSOURI

SAFETY BARRIER CURB AND MISCELLANEOUS DETAILS

HOLMES ROAD — BRIDGE NO. A-1662R1

BOUCHER & WILLIS
CONSULTING ENGINEERS, PLANNERS & ARCHITECTS
SALINA — HAYS — KANSAS CITY

MADE RPB DATE 2-15-83 TRACED RPB DATE 2-16-83
CHECKED SAC DATE 2-18-83 SCALE As Noted

SHEET NO. 9 of 10

File No. 217-9

COMPLETE BILL OF REINFORCING (WESTBOUND LANES)

NO.	SIZE	MARK	LOCATION	EPOXY	SHAPE	LENGTH	WEIGHT
			END BENTS				
18	#6	H1**	Brg. Beam		—	8'-1"	213
10	#6	H2**	Brg. Beam	E	—	8'-1"	121
8	#6	H3*	Wingwall		—	8'-11"	107
4	#6	H4	Wingwall		—	7'-0"	42
4	#6	T1	Wingwall			9'-2"	55
18	#5	U1	Brg. Beam	E		9'-1"	171
18	#5	U2	Brg. Beam			9'-1"	171
8	#4	V1 *	Wingwall		—	7'-3"	39
			INT. BENTS				
44	#9	D1**	Batt. at Col.			9'-2"	1372
6	#7	D2	Pile Caps			17'-0"	208
32	#7	D3**	Pile Caps		—	8'-0"	523
27	#8	H5	Bent Caps	E		9'-10"	709
21	#5	H6	Bent Caps		—	7'-8"	168
69	#4	P1	Columns			8'-3"	380
32	#5	U3	Bent Caps	E		8'-11"	298
16	#5	U4	Bent Caps	E		9'-1"	165
14	#9	V2	Bent 2 Col.			26'-8"	1269
14	#9	V4	Bent 4 Col.			24'-3"	1154
14	#9	V6	Bent 3 Col.			25'-6"	1214
			SUPERSTRUCTURE				
223	#5	S1**	Slab	E	—	8'-0"	1861
11	#5	S2	Slab	E	—	26'-7"	305
6	#11	S3	Slab	E	—	38'-2"	1217
12	#11	S4**	Slab	E	—	27'-6"	1753
7	#10	S5**	Slab	E	—	15'-0"	452
11	#5	S6	Slab	E	—	20'-9"	238
6	#11	S7	Slab	E	—	39'-11"	1273
5	#10	S8	Slab	E	—	17'-3"	371
11	#5	S9	Slab	E	—	17'-9"	204
6	#11	S10	Slab	E	—	35'-8"	1137
5	#10	S11	Slab	E	—	19'-0"	409
7	#8	S12**	Slab	E	—	8'-0"	149
11	#5	S13	Slab	E	—	22'-4"	256
22	#6	S14	Slab	E		8'-0"	264
18	#4	S15	Pvmt. Rest			2'-3"	27
4	#4	S16**	Pvmt. Rest		—	8'-0"	22
8	#11	S17**	Slab		—	46'-8"	1934
10	#8	S18	Slab		—	19'-0"	507
5	#9	S19	Slab		—	34'-1"	579
6	#11	S20	Slab		—	60'-1"	1915
5	#9	S22	Slab		—	34'-0"	578
8	#10	S23**	Slab		—	56'-1"	1930
7	#8	S24**	Slab		—	18'-3"	341
5	#9	S25	Slab		—	31'-3"	531
6	#9	S26	Slab		—	40'-9"	831
5	#7	S27	Slab		—	15'-9"	161
5	#9	S28	Slab		—	31'-1"	528
6	#7	S29	Edge Beam		—	45'-5"	557
6	#8	S30	Edge Beam		—	58'-0"	929
6	#8	S31	Edge Beam		—	55'-0"	881
6	#7	S32	Edge Beam		—	40'-5"	496
223	#5	S33**	Slab		—	8'-0"	1861

NO.	SIZE	MARK	LOCATION	EPOXY	SHAPE	LENGTH	WEIGHT
			BARRIER CURB				
206	#5	R1	Bar. Curb	E		3'-4"	716
20	#5	R2	Bar. Curb	E		3'-6"	73
186	#5	R3	Bar. Curb	E		3'-1"	598
206	#5	R4	Bar. Curb	E		2'-9"	591
206	#5	R5	Bar. Curb	E		2'-9"	591
12	#5	R6	Bar. Curb	E	—	7'-8"	96
12	#5	R7	Bar. Curb	E	—	31'-5"	393
36	#5	R8	Bar. Curb	E	—	9'-8"	363
6	#5	R9	Bar. Curb	E	—	34'-8"	217
6	#5	R10	Bar. Curb	E	—	26'-5"	165

COMPLETE BILL OF REINFORCING (EASTBOUND LANES)

NOTE: The Bill of Reinforcing Steel for the Eastbound Lanes is identical to the Bill of Reinforcing Steel for the Westbound Lanes, except for the following:
Delete the #4P1, #9V2, #9V4 & #9V6 bars as shown and add the following bars:

NO.	SIZE	MARK	LOCATION	EPOXY	SHAPE	LENGTH	WEIGHT
			INT. BENTS				
58	#4	P1	Columns			8'-3"	320
14	#9	V3	Bent 2 Col.			22'-10"	1087
14	#9	V5	Bent 4 Col.			21'-5"	1019
14	#9	V7	Bent 3 Col.			21'-8"	1031

BENDING DIAGRAMS

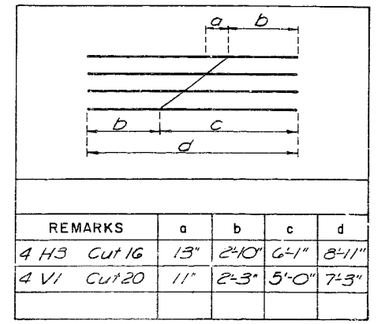

REMARKS	a	b	c	d
4 H3 Cut 16	13"	2'-10"	6'-1"	8'-11"
4 V1 Cut 20	11"	2'-3"	5'-0"	7'-3"

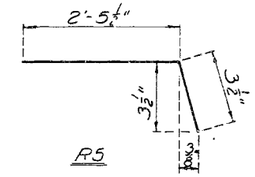

R5

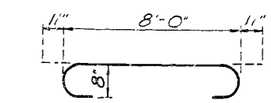

H5

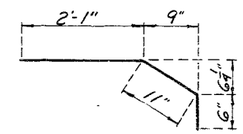

R2

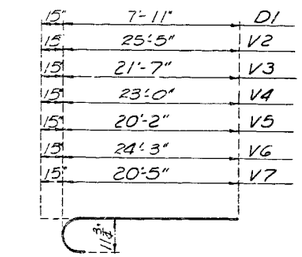

D1, V2, V3, V4, V5, V6 & V7

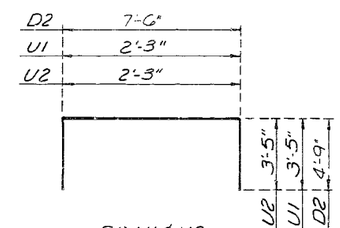

D2, U1 & U2

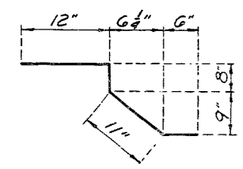

R3

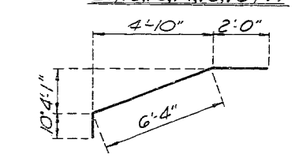

T1

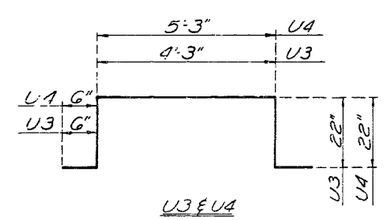

U3 & U4

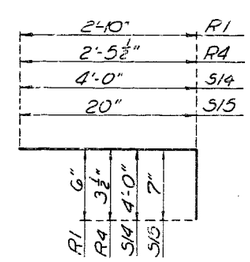

R1, R4, S14 & S15

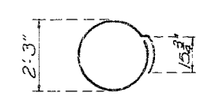

P1

Note: All dimensions are out to out of bar unless otherwise noted.
Quantities shown are for widening of the Westbound lanes except as noted.

NOTE: This contract includes the Eastbound structure only. All work relating to the Westbound structure is not included in this contract.

JACKSON COUNTY, MISSOURI

BILL OF REINFORCING STEEL

HOLMES ROAD — BRIDGE NO. A-1662R1

BURKEY + WALLIS
CONSULTING ENGINEERS PLANNERS & ARCHITECTS
SALINA HAYS KANSAS CITY

MADE SKH DATE 2-15-83 TRACED D A C DATE 2-16-83
CHECKED S A C DATE 2-18-83 SCALE None

*Series Bar
** Two additional bars are included for testing purposes.

File No. 217-9

398
398

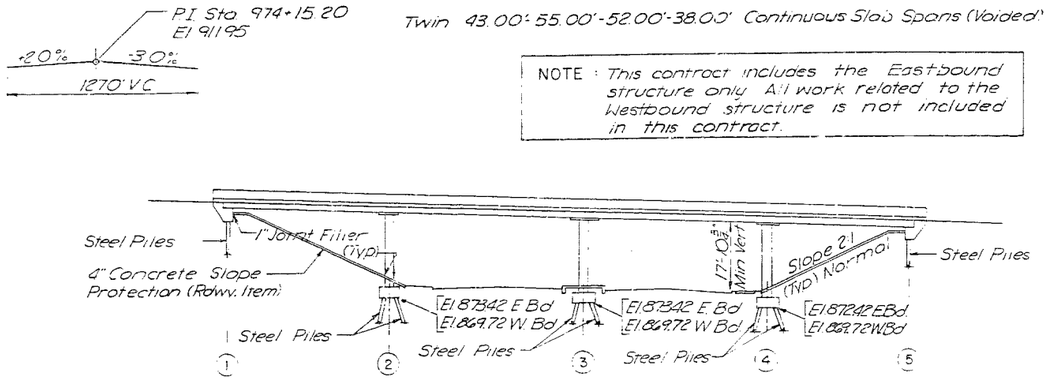

Twin 43.00'-55.00'-52.00'-38.00' Continuous Slab Spans (Voided)

NOTE: This contract includes the Eastbound structure only. All work related to the Westbound structure is not included in this contract.

GENERAL ELEVATION
(Scale 1"=20')

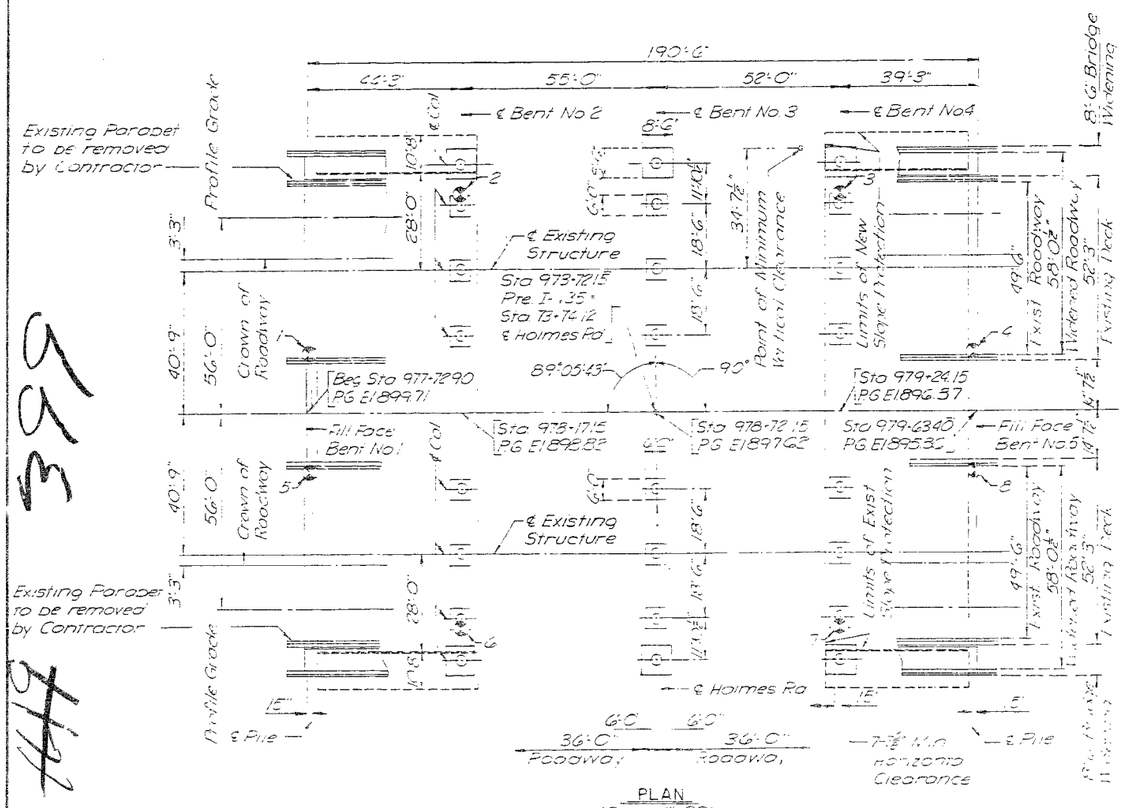

PLAN
(Scale 1"=20')

GENERAL NOTES

Design Specifications:
A.A.S.H.T.O. - 1977, Interim '78, '79, '80, '81
Working Stress Design

Design Loading:
HS20-44
Modified 24,000# Tandem Axle
Earth 120#, Equivalent Fluid Pressure 30#

Design Unit Stresses:
Class B1 Concrete (substructure & barrier curb) fc=4,000 p.s.i.
Class B2 Concrete (deck slab) fc=4,000 p.s.i.
Reinforcing Steel (Grade 60) fy=60,000 p.s.i.
Steel Pile fb=9,000 p.s.i.

Boring Data:
For Boring Data see Boring Data and Estimated Quantities Sheet
"⊗" Indicates location of boring

Bench Mark:
Elev. 192.77 Kansas City, Missouri Standard
Horizontal Control Monument #199 = Elev. 915.07 USGS Datum.
Pier Elevations shown are USGS Datum.

Removal of Existing Structure:
Outline of old work is indicated by light dashed lines on the detail sheets. Heavy lines indicate new work. Removal Limits of existing structure are shown in crosshatching. After removing existing barrier curb, saw cut slab 2" deep along a line 16½" from the outside of the deck. The contractor shall leave all existing deck reinforcement in place.

Excavation:
Pay limits for excavation quantities are measured from the existing ground line.

Reinforcing Steel:
Minimum clearance to reinforcing steel shall be 1½" unless otherwise noted.

Concrete Voided Slab:
The contractor shall pour and satisfactorily finish the concrete roadway slab at a rate of not less than 25 cubic yards per hour.
If the contractor cannot place the slab in one continuous pour, construction joints shall be placed at locations as approved by the Engineer.
Finish each side of the optional joint with ⅜" edging tool.
Tubes for producing voids shall have an outside diameter of 14.0" and shall be anchored at not more than 4'-0" centers. Fiber tubes shall have a wall thickness of not less than 0.250".
One ⅜" ø weephole shall be provided near the ends of each void. Weeholes shall be placed in straight lines parallel to bent.
The cross-slope and elevation of the 2'-1" uniform slab shall be varied as required to match the overlaid existing slab and provide a uniform wearing surface across the junction of the new and existing slabs. The thickness of the new drop panel may vary as required by maintaining the top of column elevation as shown on the plans and providing the necessary drop panel thickness to accommodate the resulting bottom of new deck elevation.

Construction Specifications:
Current issue of Missouri Standard Specifications for Highway Construction.

Safety Barrier Curb:
Top of safety barrier curb shall be built parallel to grade with barrier curb joints normal to grade.
All exposed edges of safety barrier curb shall have ¾" radius or ¾" bevel unless otherwise noted.
Plastic waterstop shall be placed in all safety barrier curb filled joints.
Cost of plastic waterstop complete in place shall be included in the bid price for concrete.

Surface Seal:
Superstructure deck surface shall be sealed in accordance with Section 703.3.18 of the Standard Specifications.

Traffic Maintained:
Traffic over structure to be maintained during construction.

Falsework:
Falsework over existing lanes should be constructed with a minimum vertical clearance of 14' from crown of existing lanes and a minimum lateral clearance of 2 feet beyond edge of pavement.

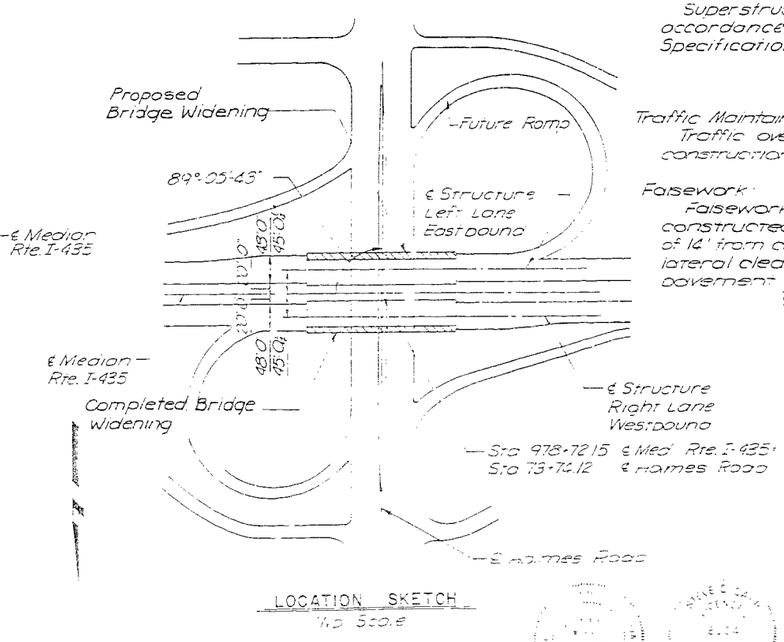

LOCATION SKETCH
(No Scale)

BRIDGE OVER HOLMES ROAD

STATE ROAD FROM KANSAS STATE LINE TO RTE. 71
ABOUT 1.4 MILES EAST OF KANSAS STATE LINE
PROJECT NO. 4-I-435-1(13) STA. 977+72.90
JOB NO. 4-I-435-1(13) RTE. I-435
JACKSON COUNTY
DATE 2-8-85

A-1662F1

JACKSON COUNTY, MISSOURI

GENERAL PLAN AND ELEVATION

HOLMES ROAD — BRIDGE NO. A-1662R1

BMS
CONSULTING ENGINEERS PLANNERS & ARCHITECTS
SALINA — HAYS — KANSAS CITY

MADE S.D.C. DATE 2-15-85 TRACED D.A.C. DATE 2-16-85
CHECKED S.A.C. DATE 2-15-85 SCALE As Noted

SHEET NO. 16 of 10

File No. 217-9

399

44

MISSOURI HIGHWAY AND TRANSPORTATION COMMISSION

STATE	PROJ. NO.	SHEET NO.
MO.		143
SEC./SUR. 32 TWP. 48N RGE. 33W		

WIDEN SUBSTRUCTURE & SUPERSTRUCTURE
EXISTING (43'-55'-52'-38') CONTINUOUS CONCRETE SLAB SPANS (VOIDED)

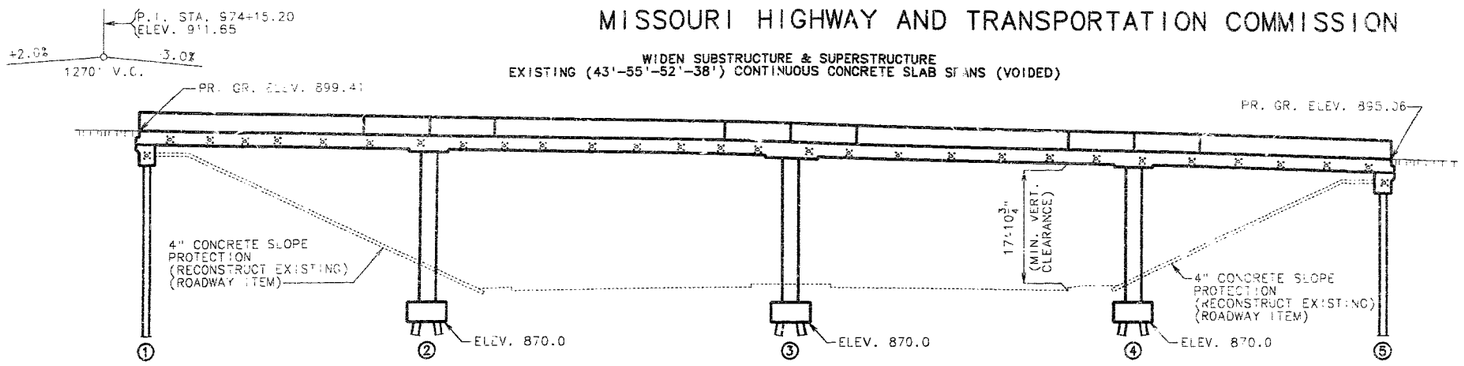

SECTION NEAR ℄ MEDIAN

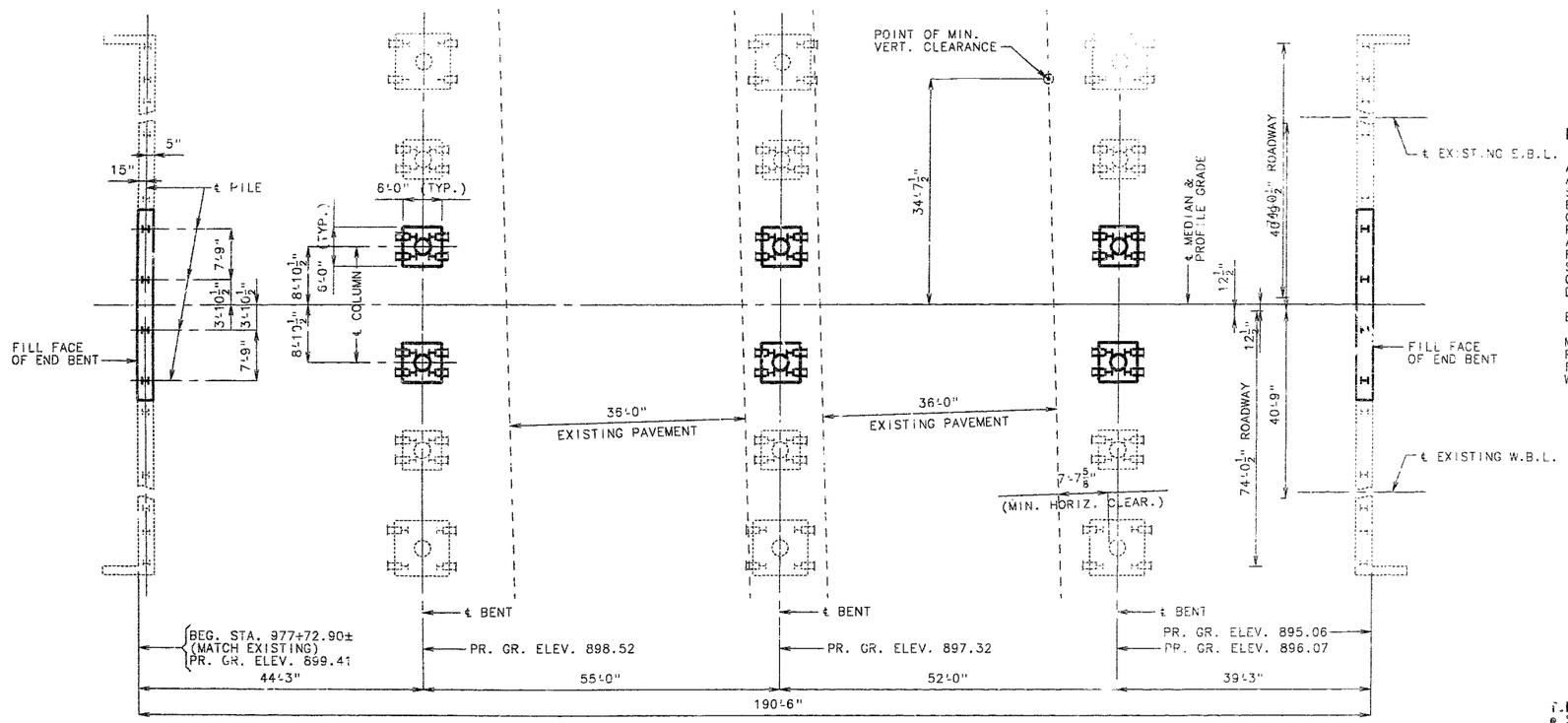

PLAN

NOTE: FOR GENERAL NOTES, ESTIMATED QUANTITIES AND PILE DATA, SEE SHEET NO. 2.
FOR BORING DATA AND LOCATION, SEE SHEETS NO. 1 & 7 OF THE ORIGINAL PLANS.

NOTE: ROADWAY FILL SHALL BE COMPLETED TO THE FINAL ROADWAY SECTION AND UP TO THE ELEVATION OF THE BOTTOM OF THE CONCRETE BEAM WITHIN THE LIMITS OF THE STRUCTURE AND FOR NOT LESS THAN 25' IN BACK OF THE FILL FACE OF THE END BENTS BEFORE PILES ARE DRIVEN FOR ANY BENTS FALLING WITH THE EMBANKMENT SECTION.

N

NOTICE AND DISCLAIMER REGARDING BORING LOG DATA

THE LOCATIONS OF ALL SUBSURFACE BORINGS FOR THIS STRUCTURE ARE SHOWN ON SHEET NO. 1 OF THE EXISTING PLANS FOR BRIDGES NO. A-1662 & A-1662R1. BORING DATA FOR THE NUMBERED LOCATIONS IS SHOWN ON SHEET NO. 7 ON A-1662 AND SHEET NO. 2 ON A-1662R1. THE BORING DATA FOR ALL LOCATIONS, AS WELL AS ANY OTHER BORING LOGS OR OTHER FACTUAL RECORDS OF SUBSTRUCTURE DATA AND INVESTIGATIONS PERFORMED BY THE DEPARTMENT FOR THE DESIGN OF THE PROJECT, IS AVAILABLE FROM THE DISTRICT MATERIALS ENGINEER UPON WRITTEN REQUEST AS OUTLINED IN THE PROJECT SPECIAL PROVISIONS. NO GREATER SIGNIFICANCE OR WEIGHT SHOULD BE GIVEN TO THE BORING DATA DEPICTED ON THE PLAN SHEETS THAT TO SUBSURFACE DATA AVAILABLE FROM THE DISTRICT OR ELSEWHERE.

THE COMMISSION DOES NOT REPRESENT OR WARRANT THAT ANY SUCH BORING DATA ACCURATELY DEPICTS THE CONDITIONS TO BE ENCOUNTERED IN CONSTRUCTING THIS PROJECT. A CONTRACTOR ASSUMES ALL RISKS IT MAY ENCOUNTER IN BASING ITS BID PRICES, TIME OR SCHEDULE OF PERFORMANCE ON THE BORING DATA DEPICTED HERE OR THOSE AVAILABLE FROM THE DISTRICT, OR ON ANY OTHER DOCUMENTATION NOT EXPRESSLY WARRANTED, WHICH THE CONTRACTOR MAY OBTAIN FROM THE COMMISSION.

T.B.M. #21 ELEV. 900.36 CHISELED + @ S.E. COR. BR. ABUT. W.B.L.
@ S.E. COR. BR. #A-1662R 15'± RT. 977+67±

REPAIRS TO BRIDGE OVER HOLMES ROAD

STATE ROAD FROM KANSAS STATE LINE TO RTE. 71
ABOUT 1.4 MILES EAST OF KANSAS STATE LINE

PROJECT NO. **STA. 977+72.90**
JOB NO. J410807 **RTE. I-435**

JACKSON COUNTY

DATE 3/1/94

STD.
STD. 706.35
A-1662R2

DESIGNED DEC. 1991
DETAILED DEC. 1991
CHECKED JAN. 1992

NOTE: THIS DRAWING IS NOT TO SCALE. FOLLOW DIMENSIONS.

SHEET NO. 1 OF 14.

168-115

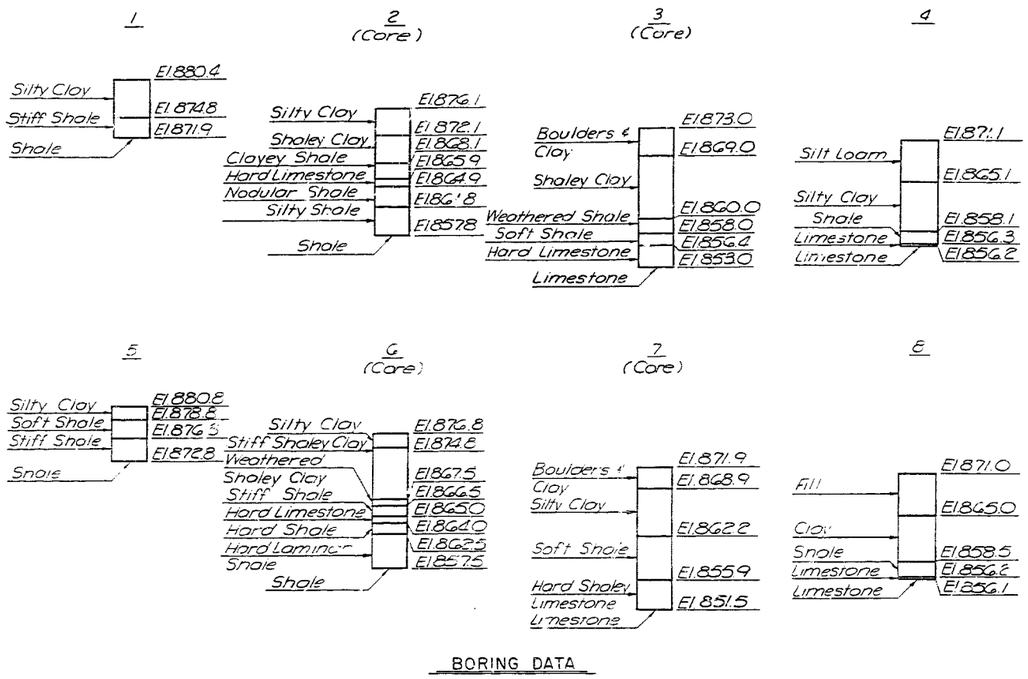

BORING DATA

Note: For location of Borings see General Plan & Elevation Sheet

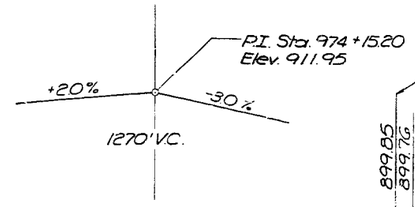

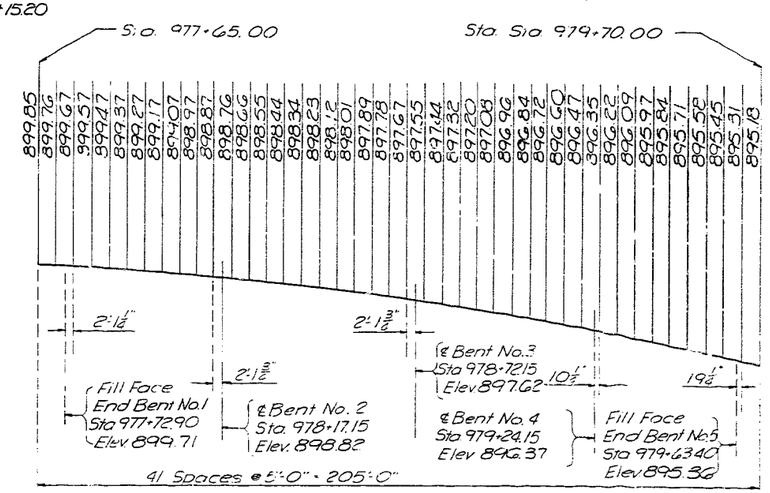

PROFILE GRADE ELEVATIONS

Note The profile grade shown is the theoretical profile grade of I-435 as obtained from the original construction plans These elevations should not be used for construction as the existing elevations do not agree with this profile.

NOTE: This contract includes the Eastbound structure only. All work relating to the Westbound structure is not included in this contract.

* Removal of Concrete shall include detailed removal of existing wings, curbs, parapets, slab, and other areas as directed by the engineer. Removal and Replacement of concrete for full depth repair and half-soling shall be included in contract unit price bid for these items.

** onflex 25 w/Elastom Panels

PILE DATA

BENT NO.		END BENT NO.1		INT. BENT NO.2		INT. BENT NO.3		INT. BENT NO.4		END BENT NO.5	
LANE		E. Bd	W. Bd	E. Bd	W. Bd	E. Bd	W. Bd	E. Bd	W. Bd	E. Bd	W. Bd
Pile Type and Size		HP 10×42		HP 10×42		HP 10×42		HP 10×42		HP 10×42	
Number		2	2	4	4	4	4	4	4	2	2
Approximate Length	Ft	33	33	12	12	19	19	19	19	39	39
Design Bearing	Tons	29	29	66	48	48	48	66	66	29	29
Hammer Energy Read	Ft Lbs	7000	7000	14900	14900	10800	10800	14900	14900	7000	7000

Note: Minimum energy requirement of the hammer based on plan length and design bearing value of the piles
All piles shall be driven to practical refusal

ESTIMATED QUANTITIES

	ITEM		EASTBOUND	WESTBOUND	TOTAL
	Removal & Replacement of Det. Conc.	Sq. Ft	23		
*	Removal of Concrete	Cu Yd	21.8		
	Class I Excavation	Cu Yd	70.0		
	Structural Steel Pile (10")	Lin. Ft	532		
	Class B1 Concrete	Cu Yd	58.1		
	Class B2 Concrete	Cu Yd	109.8		
**	Elastomeric Expansion Joint Seal	Lin. Ft	191		
	Reinforcing Steel (Grade 60)	LBS	21,023		
	Reinforcing Steel (Gr. 60) Epoxy Coated	LBS	15,156		
	Epoxy Resin Crack Repair	Lin. Ft	0		
	Repairing Conc. Deck (Half-Soling)	Sq. Ft.	32		
	Low Slump Conc. Wearing Surface	Sq. Yd.	1048		
	Class I Excavation + 25%	Cu. Yd	2.0		

Job No 4-I-435-213
Proj 4-I-435-213

JACKSON COUNTY, MISSOURI

BORING DATA AND ESTIMATED QUANTITIES

HOLMES ROAD BRIDGE NO. A-1662R1

BOWER & WILLIS
CONSULTING ENGINEERS, PLANNERS & ARCHITECTS
SALINA HAYS KANSAS CITY

MADE S.A.C. DATE 2-15-83 TRACED D.A.C. DATE 2-16-83
CHECKED S.K.H. DATE 2-16-83 SCALE NO SCALE

SHEET NO. 2A of 10

File No. 217-9

HB 400

MISSOURI HIGHWAY AND TRANSPORTATION COMMISSION

STATE	PROJ. NO.	SHEET NO.
MO.		143
SEC./SUR. 32 TWP. 48N RGE. 33W		

WIDEN SUBSTRUCTURE & SUPERSTRUCTURE
EXISTING (43'-55'-52'-38') CONTINUOUS CONCRETE SLAB SPANS (VOIDED)

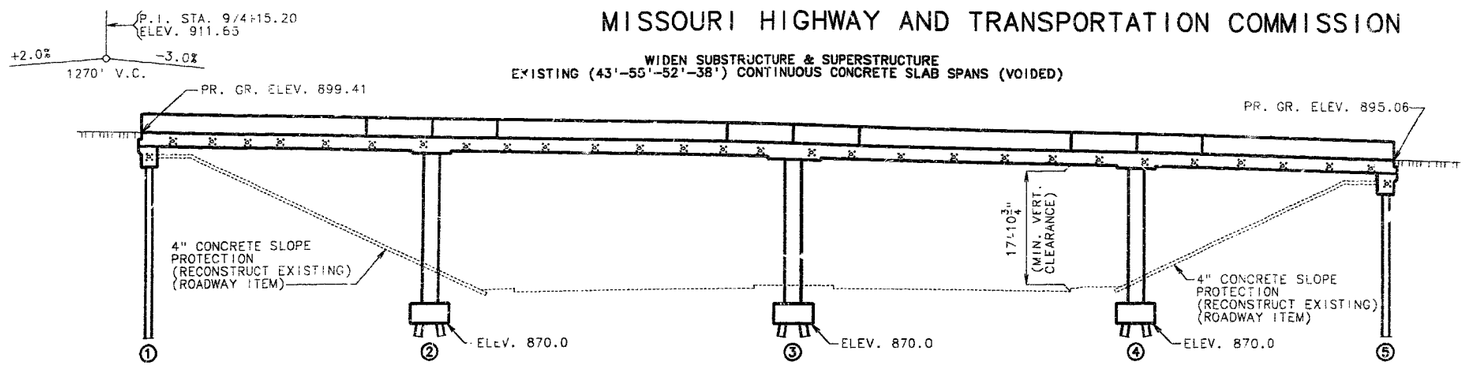

SECTION NEAR ℄ MEDIAN

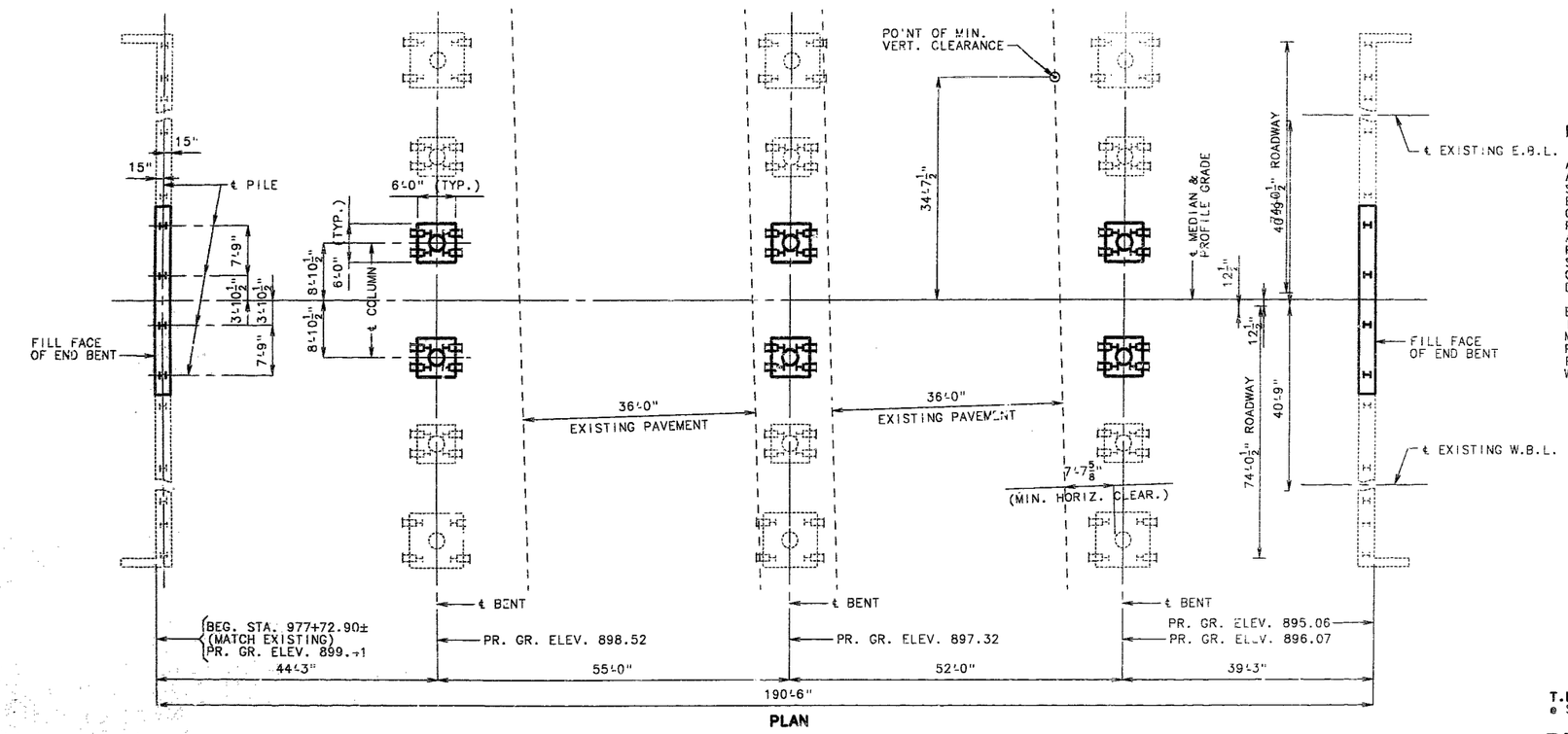

PLAN

NOTE: FOR GENERAL NOTES, ESTIMATED QUANTITIES AND PILE DATA, SEE SHEET NO. 2.
FOR BORING DATA AND LOCATION, SEE SHEETS NO. 1 & 7 OF THE ORIGINAL PLANS.

NOTE: ROADWAY FILL SHALL BE COMPLETED TO THE FINAL ROADWAY SECTION AND UP TO THE ELEVATION OF THE BOTTOM OF THE CONCRETE BEAM WITHIN THE LIMITS OF THE STRUCTURE AND FOR NOT LESS THAN 25' IN BACK OF THE FILL FACE OF THE END BENTS BEFORE PILES ARE DRIVEN FOR ANY BENTS FALLING WITH THE EMBANKMENT SECTION.

N

NOTICE AND DISCLAIMER REGARDING BORING LOG DATA

THE LOCATIONS OF ALL SUBSURFACE BORINGS FOR THIS STRUCTURE ARE SHOWN ON SHEET NO. 1 OF THE EXISTING PLANS FOR BRIDGES NO. A-1662 & A-1662R1. BORING DATA FOR THE NUMBERED LOCATIONS IS SHOWN ON SHEET NO. 7 ON A-1662 AND SHEET NO. 2 ON A-1662R1. THE BORING DATA FOR ALL LOCATIONS, AS WELL AS ANY OTHER BORING LOGS OR OTHER FACTUAL RECORDS OF SUBSTRUCTURE DATA AND INVESTIGATIONS PERFORMED BY THE DEPARTMENT FOR THE DESIGN OF THE PROJECT, IS AVAILABLE FROM THE DISTRICT MATERIALS ENGINEER UPON WRITTEN REQUEST AS OUTLINED IN THE PROJECT SPECIAL PROVISIONS. NO GREATER SIGNIFICANCE OR WEIGHT SHOULD BE GIVEN TO THE BORING DATA DEPICTED ON THE PLAN SHEETS THAN TO SUBSURFACE DATA AVAILABLE FROM THE DISTRICT OR ELSEWHERE.

THE COMMISSION DOES NOT REPRESENT OR WARRANT THAT ANY SUCH BORING DATA ACCURATELY DEPICTS THE CONDITIONS TO BE ENCOUNTERED IN CONSTRUCTING THIS PROJECT. A CONTRACTOR ASSUMES ALL RISKS IT MAY ENCOUNTER IN BASING ITS BID PRICES, TIME OR SCHEDULE OF PERFORMANCE ON THE BORING DATA DEPICTED HERE OR THOSE AVAILABLE FROM THE DISTRICT, OR ON ANY OTHER DOCUMENTATION NOT EXPRESSLY WARRANTED, WHICH THE CONTRACTOR MAY OBTAIN FROM THE COMMISSION.

T.B.M. #21 ELEV. 900.36 CHISELED + ● S.E. COR. BR. ABUT. W.B.L.
● S.E. COR. BR. #A-1662R 15'± RT. 977+67±

REPAIRS TO BRIDGE OVER HOLMES ROAD

STATE ROAD FROM KANSAS STATE LINE TO RTE. 71
ABOUT 1.4 MILES EAST OF KANSAS STATE LINE

PROJECT NO. **STA. 977+72.90**
JOB NO. J410807 **RTE. I-435**

JACKSON COUNTY

DATE 3/1/94

STD.
STD. 706.35
A-1662R2

DESIGNED DEC. 1991
DETAILED DEC. 1991
CHECKED JAN. 1992

NOTE: THIS DRAWING IS NOT TO SCALE. FOLLOW DIMENSIONS.

SHEET NO. 1 OF 14.

168/115

STATE	PROJ. NO.	SHEET NO.
MO.		144

GENERAL NOTES:

DESIGN SPECIFICATIONS: A.A.S.H.T.O.-1992
LOAD FACTOR DESIGN
SEISMIC PERFORMANCE CATEGORY A

DESIGN LOADING:
HS20-44 MODIFIED 24,000# TANDEM AXLE
NO FUTURE WEARING SURFACE
EARTH 120#/CU. FT., EQUIVALENT FLUID PRESSURE 45#/CU. FT.

DESIGN UNIT STRESSES:
CLASS B CONCRETE (FOOTINGS) F'C=3,000 PSI.
CLASS B1 CONCRETE (MEDIAN BARRIER CURB, INT. BT. COLUMNS AND END BENTS BELOW LOWER CONST. JOINT) F'C=4,000 PSI.
CLASS B2 CONCRETE (SUPERSTRUCTURE EXCEPT MEDIAN BARRIER CURB) F'C=4,000 PSI.
REINFORCING STEEL (GRADE 60) FY=60,000 PSI.
STEEL PILE FB=9,000 PSI.

REINFORCING STEEL:
MINIMUM CLEARANCE TO REINFORCING STEEL SHALL BE 1-1/2", UNLESS OTHERWISE SHOWN.
BARS BONDED IN OLD CONCRETE NOT REMOVED SHALL BE CLEANLY STRIPPED AND EMBEDDED INTO NEW CONCRETE WHERE POSSIBLE. IF LENGTH IS AVAILABLE, OLD BARS SHALL EXTEND INTO NEW CONCRETE AT LEAST 40 DIAMETERS FOR SMOOTH BARS AND 30 DIAMETERS FOR DEFORMED BARS, UNLESS OTHERWISE NOTED.

TRAFFIC:
TRAFFIC OVER STRUCTURE TO BE MAINTAINED DURING CONSTRUCTION.

CONSTRUCTION CLEARANCE:
FALSEWORK OVER EXISTING LANES SHALL BE CONSTRUCTED WITH A MINIMUM VERTICAL CLEARANCE OF 14'-9" FROM CROWN OF EXISTING LANES AND A MINIMUM LATERAL CLEARANCE OF 28'-0" CENTERED ON EACH EXISTING LANE.

JOINT FILLER:
ALL JOINT FILLER SHALL MEET THE REQUIREMENTS OF STD. SPEC. 1057.2.4, EXCEPT AS NOTED.

NOTE: OUTLINE OF OLD WORK IS INDICATED BY LIGHT DASHED LINES. HEAVY LINES INDICATE NEW WORK.

THE 5/8" DIAMETER RESIN ANCHOR SYSTEMS SHALL HAVE A MINIMUM ULTIMATE PULLOUT STRENGTH OF 15,500 LBS. IN CONCRETE WITH F'C=4,000 PSI, SEE SPECIAL PROVISIONS.

ESTIMATED QUANTITIES

ITEM		SUBSTR.	SUPERSTR.	TOTAL
CURB REMOVAL (BRIDGES)	LIN. FT.		403	403
PARTIAL REMOVAL OF SUBSTRUCTURE CONCRETE	LUMP SUM			1
CLASS 1 EXCAVATION	CU. YD.	145		145
STRUCTURAL STEEL PILES (10")	LIN. FT.	632		632
CLASS B CONCRETE (SUBSTR.)	CU. YD.	24.0		24.0
CLASS B1 CONCRETE (SUPERSTR. VOIDED SLABS)	CU. YD.		43.1	43.1
CLASS B2 CONCRETE (SUPERSTR. VOIDED SLABS)	CU. YD.		361.4	361.4
* MEDIAN BARRIER CURB	LIN. FT.		191	191
REINFORCING STEEL (BRIDGES)	LB.	690	5,330	6,020
REINFORCING STEEL (EPOXY COATED)	LB.		83,730	83,730

NOTE: ALL REINFORCEMENT IN END BENTS AND IN COLUMNS AT INT. BENTS IS INCLUDED IN SUPERSTRUCTURE QUANTITIES.
* MEDIAN BARRIER CURB SHALL BE CAST-IN-PLACE OPTION OR SLIP-FORM OPTION.
ALL CONCRETE IN END BENTS AND INTERMEDIATE BENT COLUMNS IS INCLUDED WITH SUPERSTRUCTURE QUANTITIES.

PILE DATA

BENT NO.	1	2	3	4	5
PILE TYPE AND SIZE	HP 10X42				
NUMBER	4	8	8	8	4
APPROXIMATE LENGTH FT.	30	12	17	17	36
DESIGN BEARING TONS	41	53	52	49	38
HAMMER ENERGY REQUIRED FT.-LBS.	9,200	12,500	12,300	11,600	8,400

NOTE: MINIMUM ENERGY REQUIREMENT OF HAMMER IS BASED ON PLAN LENGTH AND DESIGN BEARING VALUE OF PILES.
ALL PILES SHALL BE DRIVEN TO PRACTICAL REFUSAL.

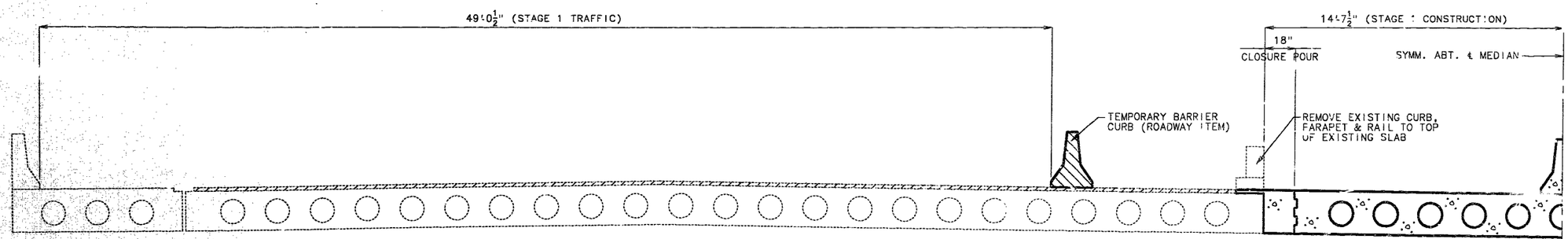

DETAILS OF STAGE CONSTRUCTION

DETAILED DEC. 1991
CHECKED JAN. 1992

NOTE: THIS DRAWING IS NOT TO SCALE. FOLLOW DIMENSIONS.

JACKSON COUNTY

A-1662R2

TBT 116

STATE	PROJ. NO.	SHEET NO.
MO.		145

NOTE: SLAB DEPTH VARIES, SEE SHEET NO. 10.

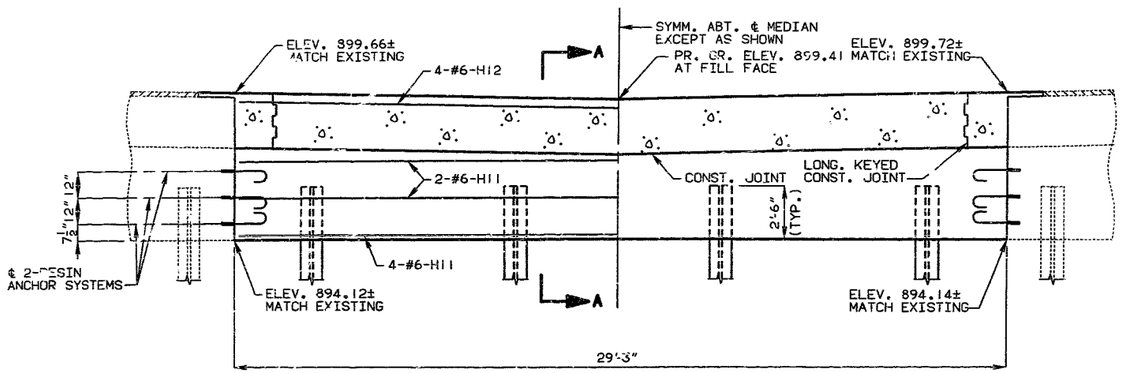

SECTION NEAR END BENT

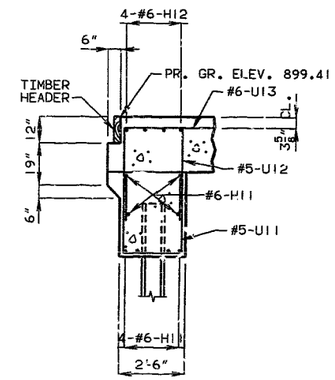

SECTION A-A

NOTE: FOR DETAILS OF TIMBER HEADER, SEE SHEET NO. 11.
FOR DETAIL OF RESIN ANCHOR SYSTEM, SEE SHEET NO. 8.

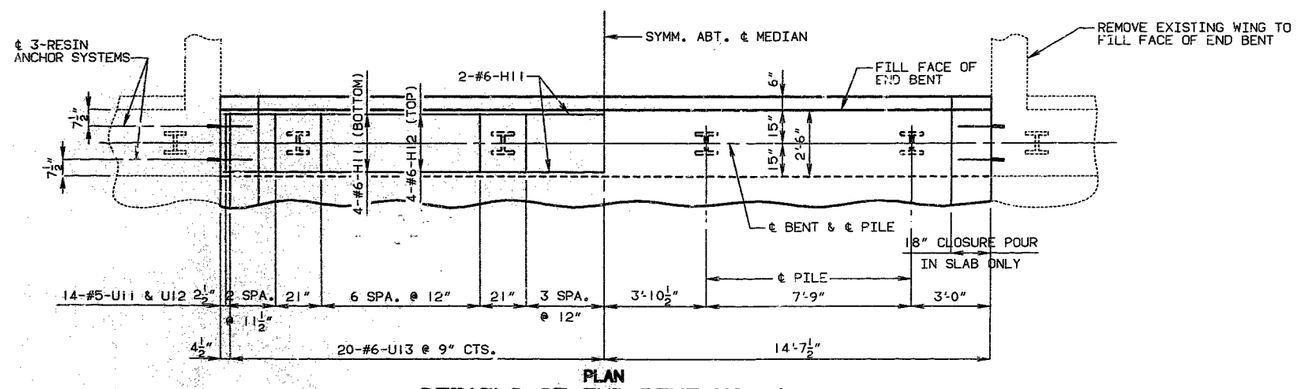

PLAN

DETAILS OF END BENT NO. 1

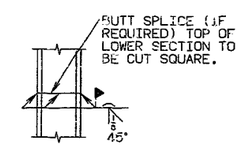

STEEL PILE SPLICE

SUBSTRUCTURE QUANTITY TABLE FOR BENT NO. 1

ITEM		QUANTITY
CLASS 1 EXCAVATION	CU. YD.	10
STRUCTURAL STEEL PILES (10")	LIN. FT.	120

NOTE: WORK THIS TABLE WITH ESTIMATED QUANTITIES AS SHOWN ON SHEET NO. 2.

178/117

DETAILED DEC. 1991
CHECKED JAN. 1992

NOTE: THIS DRAWING IS NOT TO SCALE. FOLLOW DIMENSIONS.

JACKSON COUNTY

A-1662R2

STATE	PROJ. NO.	SHEET NO.
MO.		146

NOTE: SLAB DEPTH VARIES, SEE SHEET NO. 10.

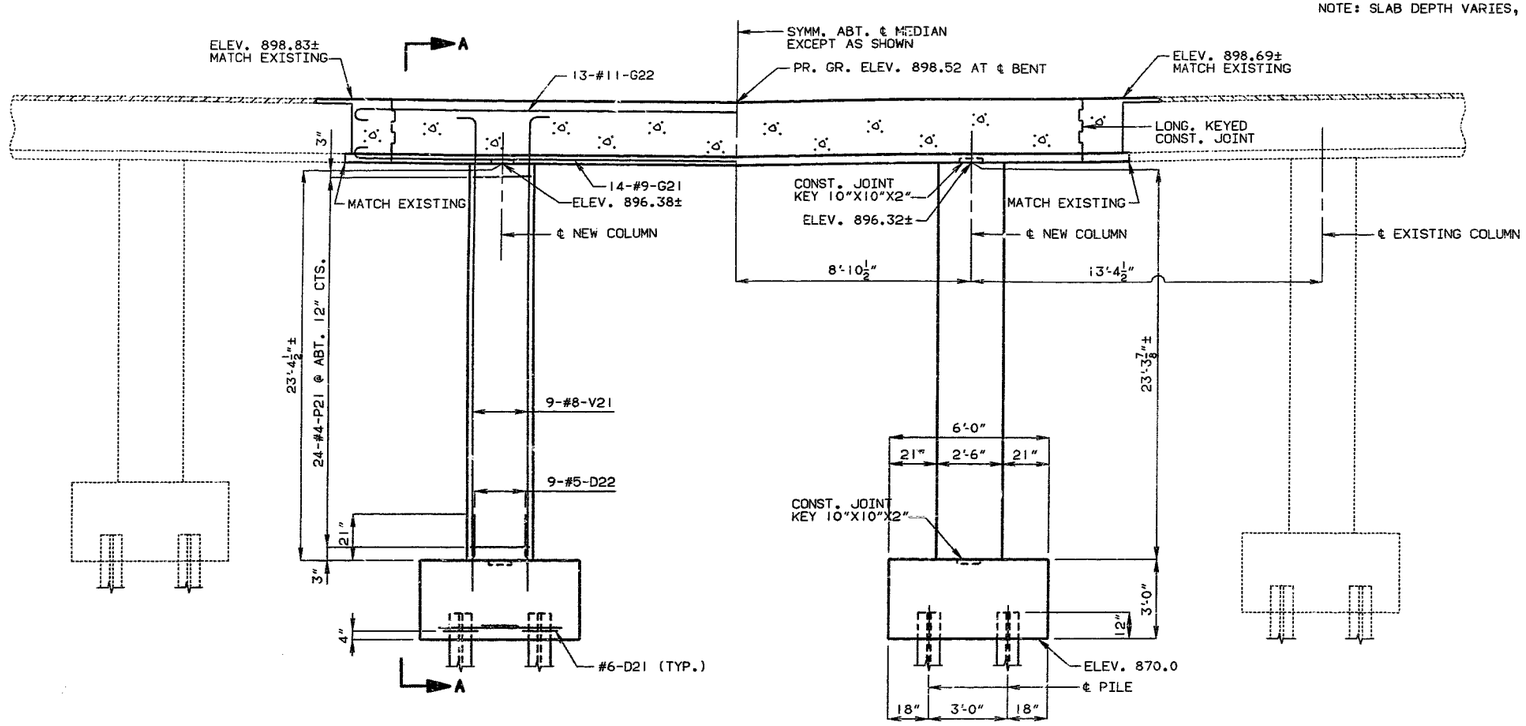

SECTION NEAR INTERMEDIATE BENT

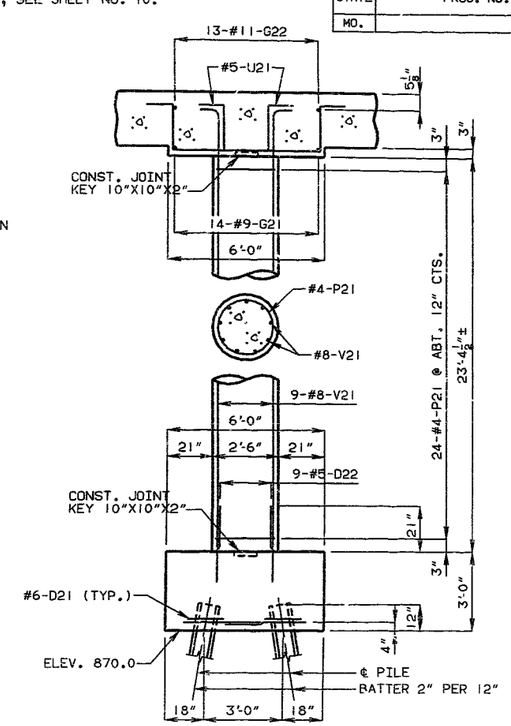

SECTION A-A

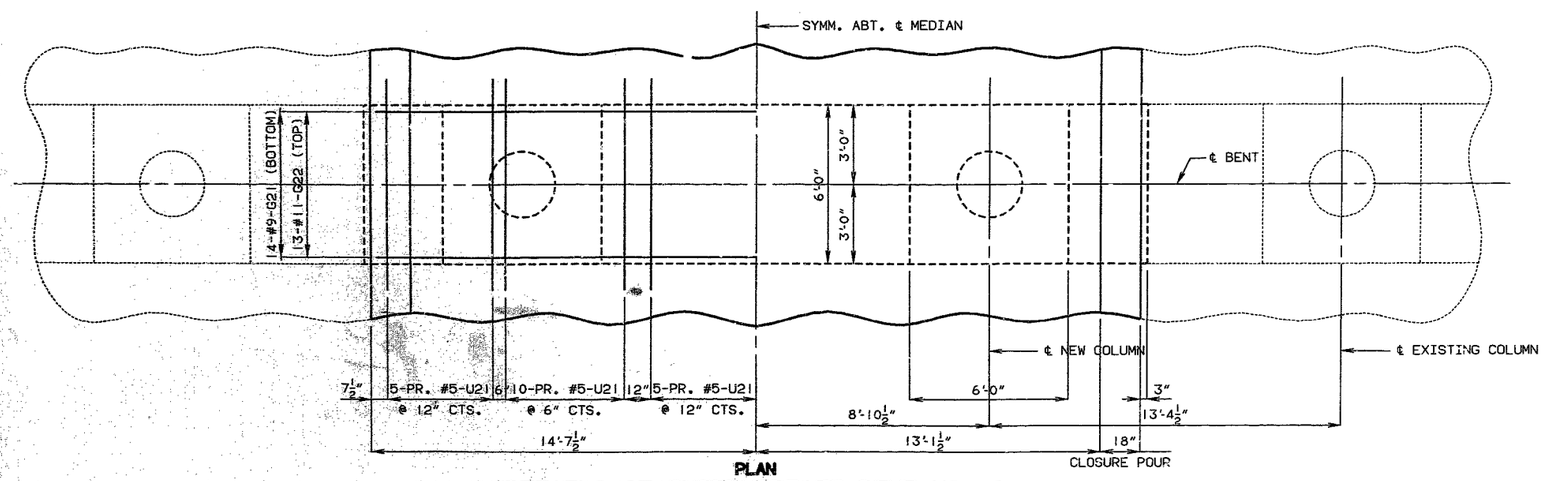

PLAN

DETAILS OF INTERMEDIATE BENT NO. 2

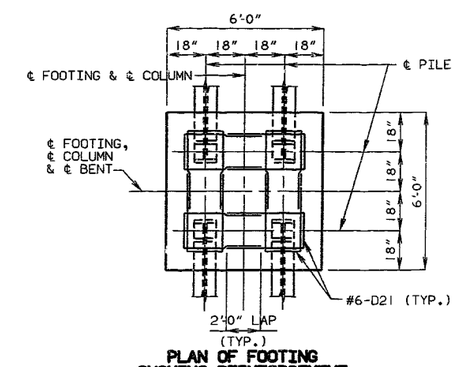

PLAN OF FOOTING SHOWING REINFORCEMENT

SUBSTRUCTURE QUANTITY TABLE FOR BENT NO. 2

ITEM		QUANTITY
CLASS I EXCAVATION	CU. YD.	50
STRUCTURAL STEEL PILES (10")	LIN. FT.	96
CLASS B CONCRETE (SUBSTRUCTURE)	CU. YD.	8.0
REINFORCING STEEL (BRIDGES)	LB.	230

NOTE: WORK THIS TABLE WITH ESTIMATED QUANTITIES AS SHOWN ON SHEET NO. 2.

DETAILED DEC. 1991
CHECKED JAN. 1992

NOTE: THIS DRAWING IS NOT TO SCALE. FOLLOW DIMENSIONS.

JACKSON COUNTY

A-1662R2

174 118

STATE	PROJ. NO.	SHEET NO.
MO.		147

NOTE: SLAB DEPTH VARIES, SEE SHEET NO. 10.

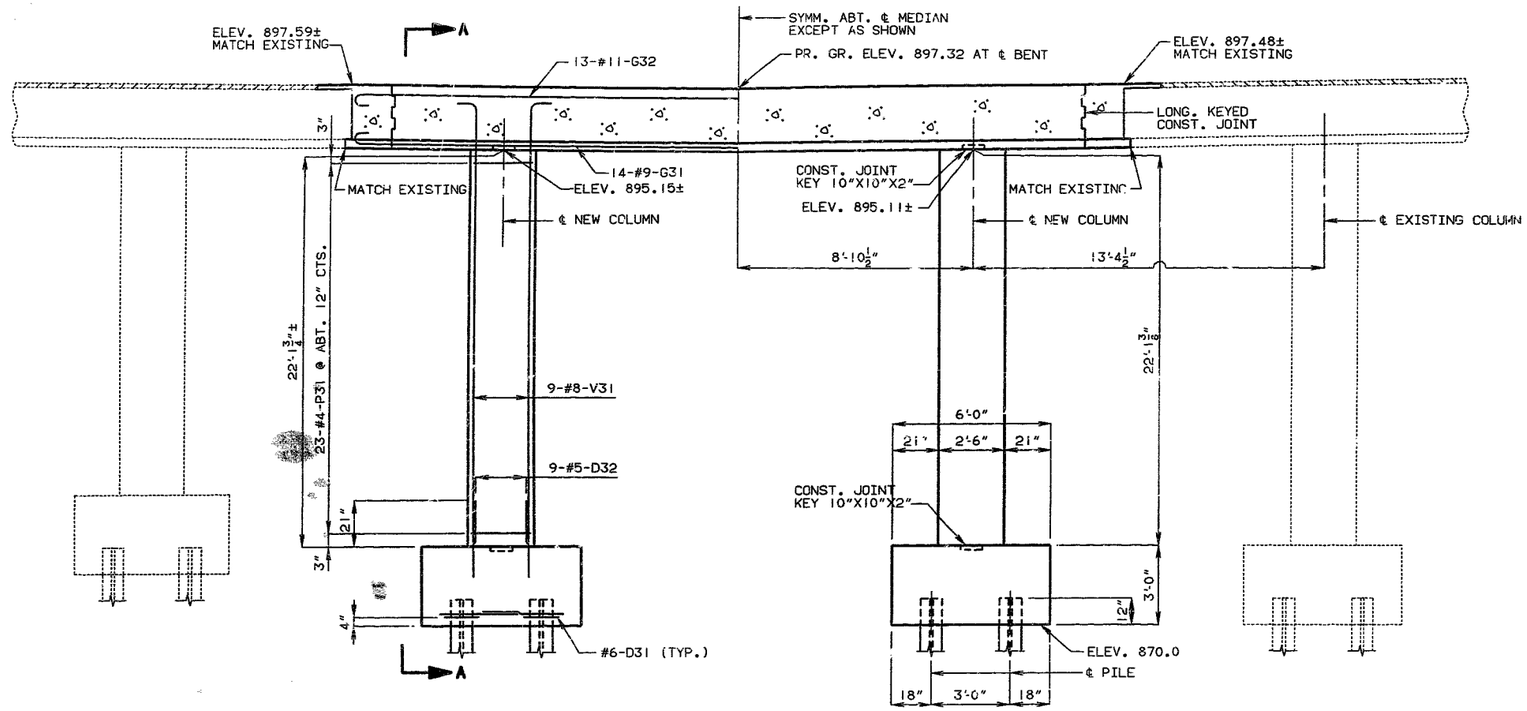

SECTION NEAR INTERMEDIATE BENT

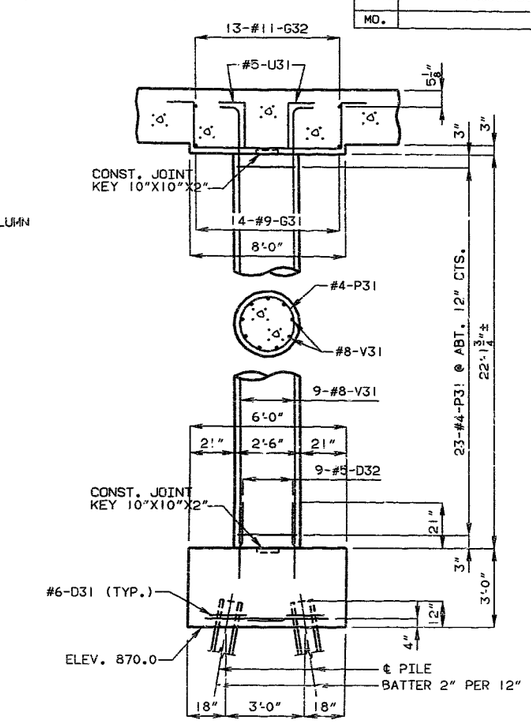

SECTION A-A

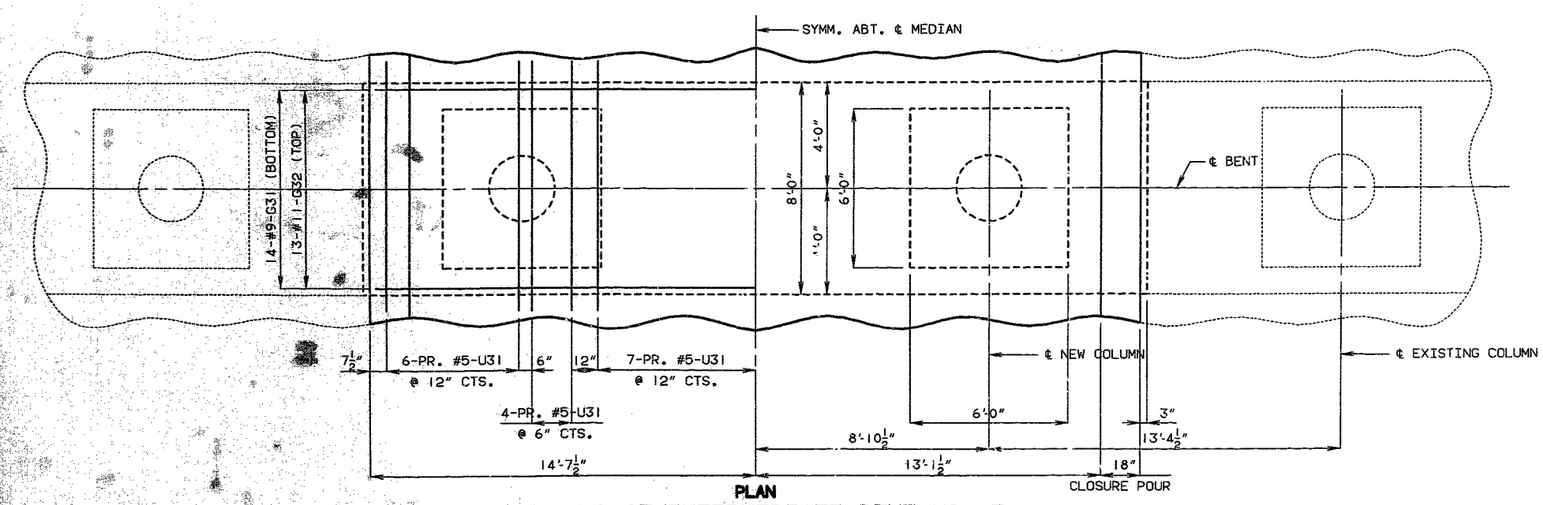

PLAN

DETAILS OF INTERMEDIATE BENT NO. 3

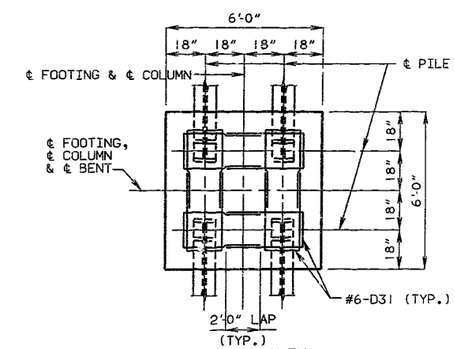

PLAN OF FOOTING
SHOWING REINFORCEMENT

SUBSTRUCTURE QUANTITY TABLE FOR BENT NO. 3

ITEM		QUANTITY
CLASS I EXCAVATION	CU. YD.	35
STRUCTURAL STEEL PILES (10")	LIN. FT.	136
CLASS B CONCRETE (SUBSTRUCTURE)	CU. YD.	8.0
REINFORCING STEEL (BRIDGES)	LB.	230

NOTE: WORK THIS TABLE WITH ESTIMATED QUANTITIES AS SHOWN ON SHEET NO. 2.

DETAILED DEC. 1991
CHECKED JAN. 1992

NOTE: THIS DRAWING IS NOT TO SCALE. FOLLOW DIMENSIONS.

SHEET NO. 5 OF 14.

JACKSON COUNTY

A-1662R2

472119

NOTE: SLAB DEPTH VARIES, SEE SHEET NO. 10.

STATE	PROJ. NO.	SHEET NO.
MO.		148

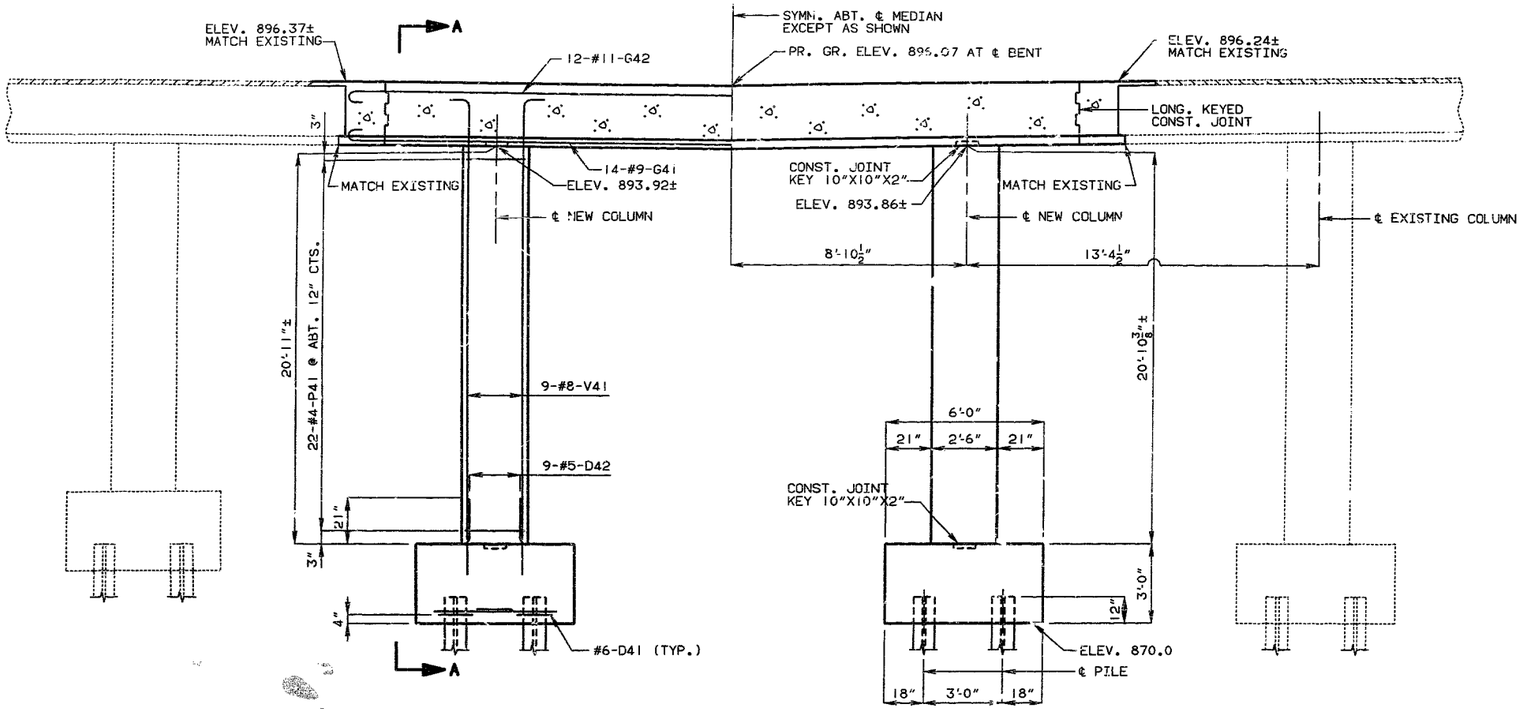

SECTION NEAR INTERMEDIATE BENT

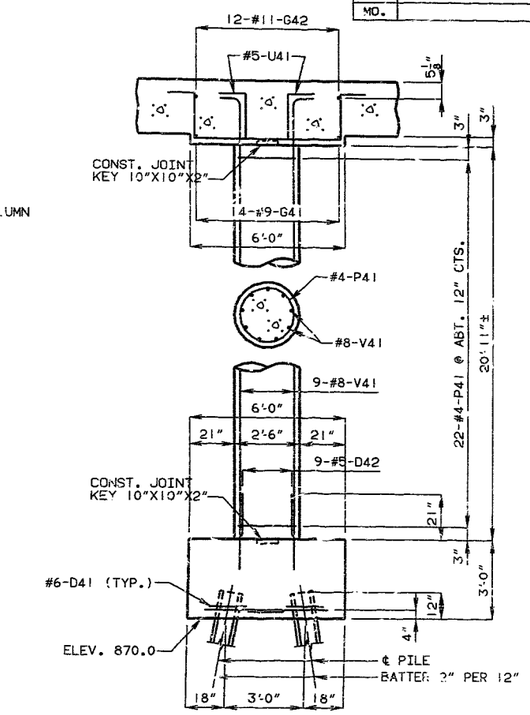

SECTION A-A

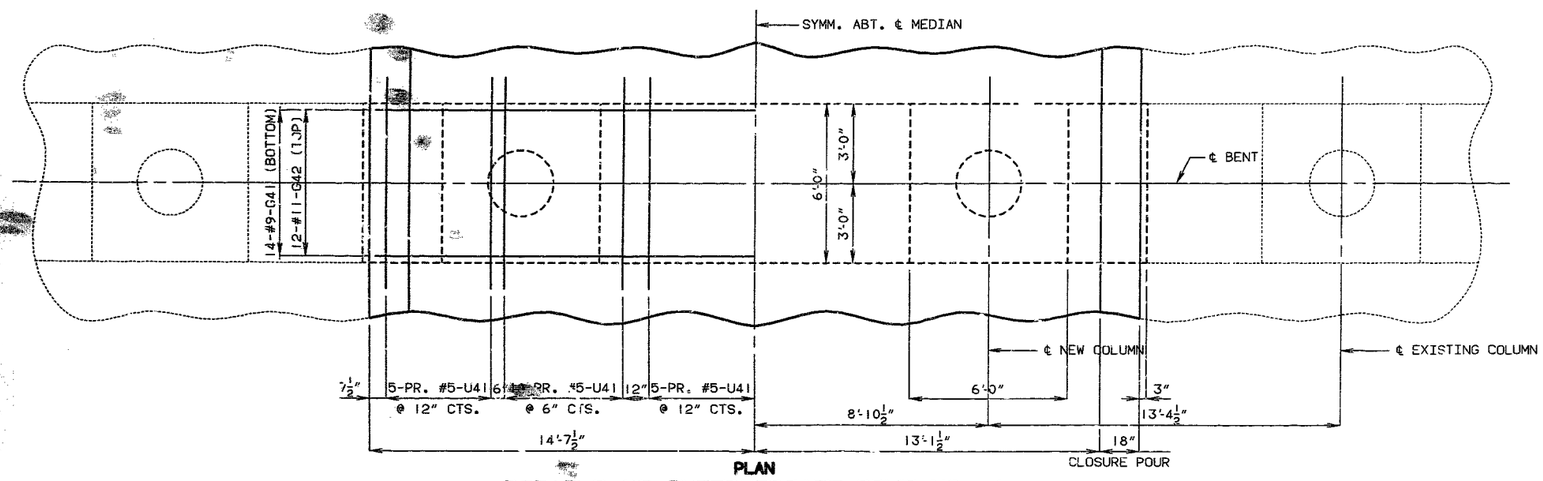

PLAN

DETAILS OF INTERMEDIATE BENT NO. 4

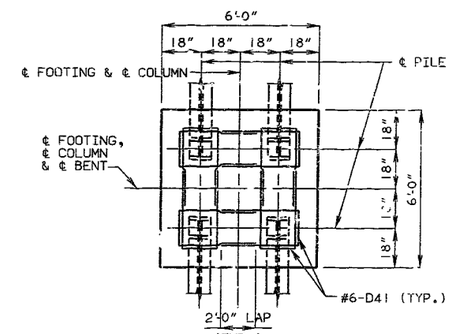

PLAN OF FOOTING
SHOWING REINFORCEMENT

SUBSTRUCTURE QUANTITY TABLE FOR BENT NO. 4

ITEM		QUANTITY
CLASS I EXCAVATION	CU. YD.	40
STRUCTURAL STEEL PILES (10")	LIN. FT.	136
CLASS B CONCRETE (SUBSTRUCTURE)	CU. YD.	8.0
REINFORCING STEEL (BRIDGES)	LB.	230

NOTE: WORK THIS TABLE WITH ESTIMATED QUANTITIES AS SHOWN ON SHEET NO. 2.

DETAILED DEC. 1991
CHECKED JAN. 1992

NOTE: THIS DRAWING IS NOT TO SCALE. FOLLOW DIMENSIONS.

JACKSON COUNTY

A-1662R2

173-120

STATE	PROJ. NO.	SHEET NO.
MO.		149

NOTE: SLAB DEPTH VARIES, SEE SHEET NO. 10.

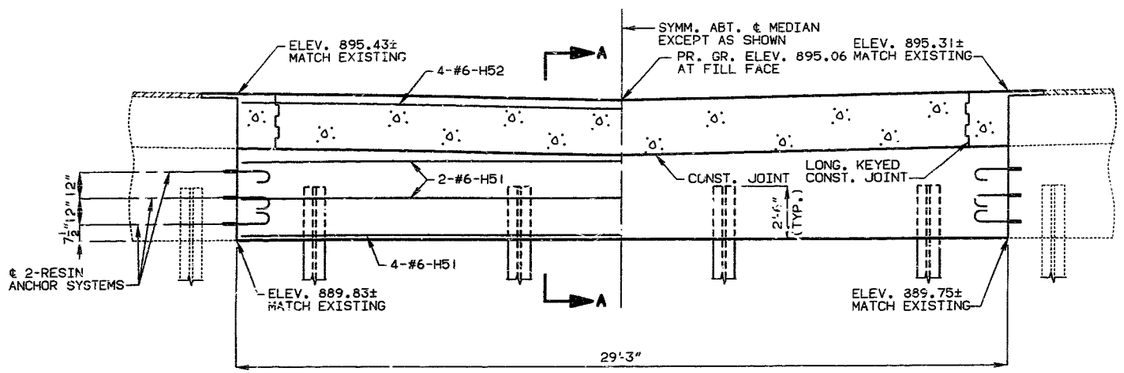

SECTION NEAR END BENT

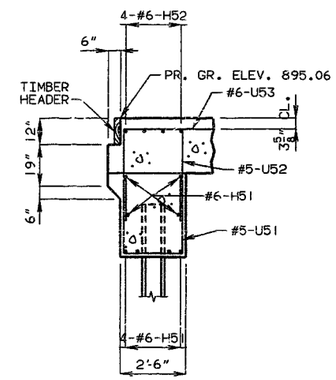

SECTION A-A

NOTE: FOR DETAILS OF TIMBER HEADER, SEE SHEET NO. 11. FOR DETAIL OF RESIN ANCHOR SYSTEM, SEE SHEET NO. 8.

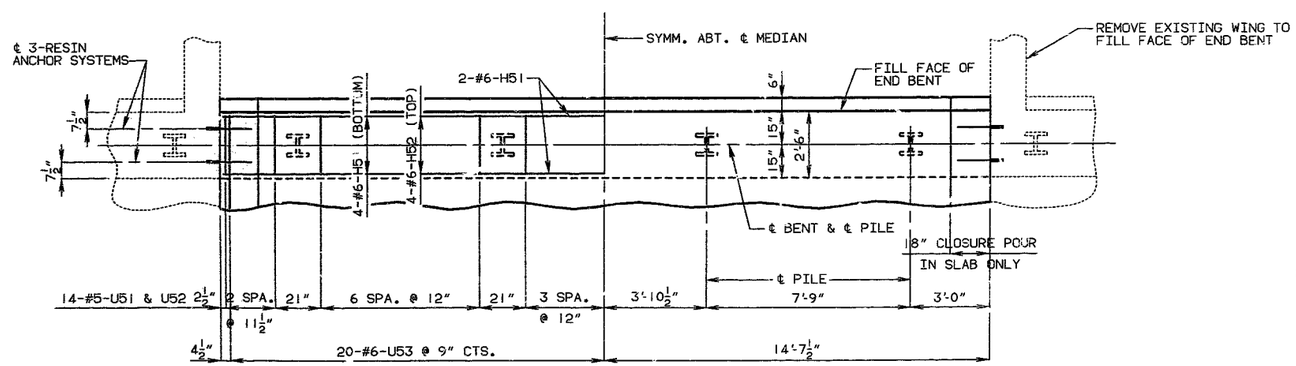

PLAN

DETAILS OF END BENT NO. 5

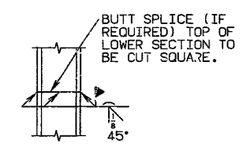

STEEL PILE SPLICE

SUBSTRUCTURE QUANTITY TABLE FOR BENT NO. 5		
ITEM		QUANTITY
CLASS 1 EXCAVATION	CU. YD.	10
STRUCTURAL STEEL PILES (10")	LIN. FT.	144

NOTE: WORK THIS TABLE WITH ESTIMATED QUANTITIES AS SHOWN ON SHEET NO. 2.

DETAILED DEC. 1991
CHECKED JAN. 1992

NOTE: THIS DRAWING IS NOT TO SCALE. FOLLOW DIMENSIONS.

JACKSON COUNTY

A-1662R2

174/131

STATE	PROJ. NO.	SHEET NO.
MO.		150

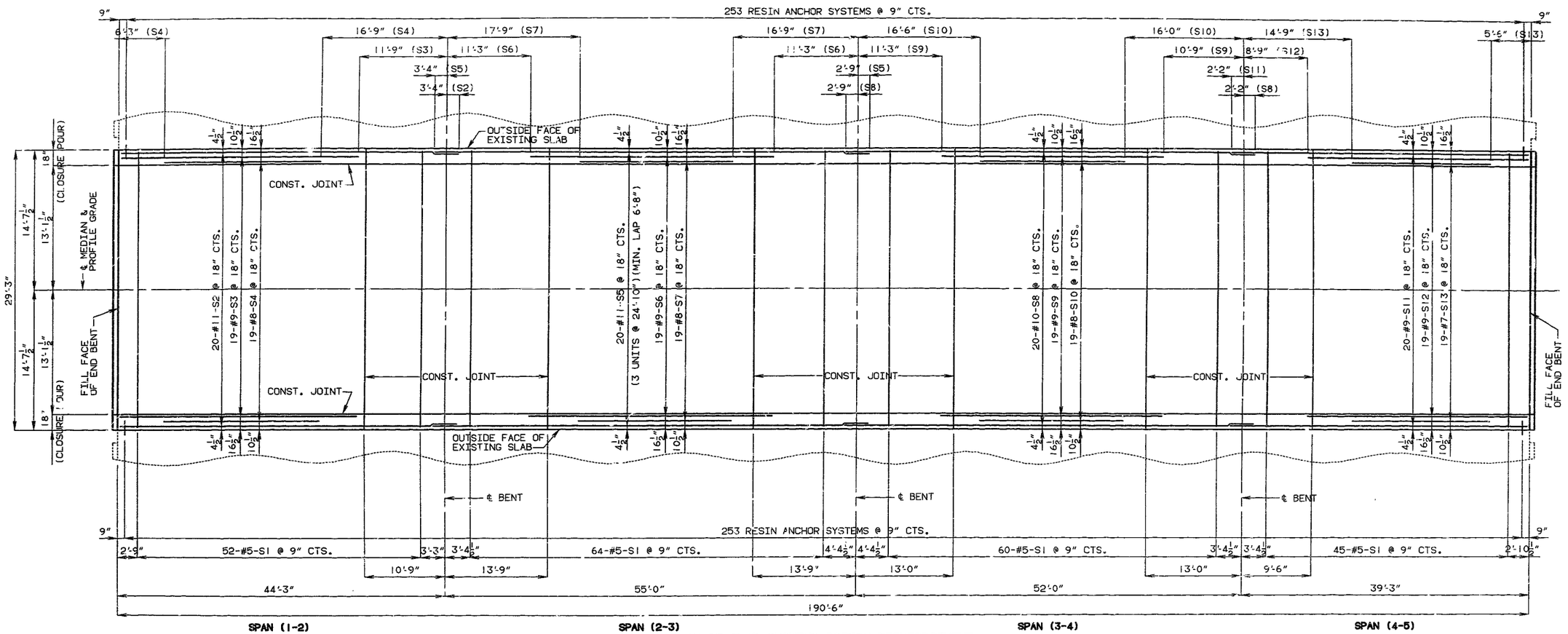

PLAN OF SLAB SHOWING BOTTOM REINFORCEMENT

NOTE: LONGITUDINAL DIMENSIONS ARE HORIZONTAL.
FOR SECTIONS THRU SLAB, SEE SHEET NO. 10
THE CONTRACTOR SHALL PROVIDE AN APPROVED RETARDER TO RETARD THE SET OF THE CONCRETE TO 2.5 HOURS AND SHALL POUR AND SATISFACTORILY FINISH THE ROADWAY SLAB AT A RATE OF NOT LESS THAN 38 CUBIC YARDS PER HOUR. (THE CONTRACTOR SHALL OBSERVE THE TRANSVERSE CONSTRUCTION JOINTS SHOWN ON PLANS, UNLESS HE CAN DEMONSTRATE TO THE ENGINEER THAT HE IS EQUIPPED TO POUR AND SATISFACTORILY FINISH THE ROADWAY SLAB AT A RATE WHICH PERMITS A CONTINUOUS POURING THROUGH SOME OR ALL OF THESE JOINTS.)

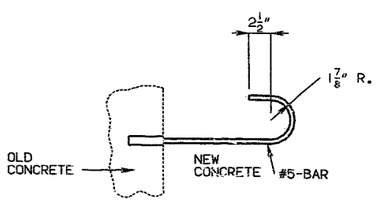

DETAIL OF RESIN ANCHOR SYSTEM

NOTE: COST OF FURNISHING AND INSTALLING RESIN ANCHOR SYSTEMS FOR SLAB SHALL BE INCLUDED IN THE CONTRACT UNIT PRICE BID FOR CONCRETE. THE CONTRACTOR SHALL USE ONE OF THE RESIN ANCHOR SYSTEMS LISTED IN THE JOB SPECIAL PROVISIONS. THESE RESIN ANCHOR SYSTEMS SHALL BE INSTALLED ACCORDING TO THE MANUFACTURER'S SPECIFICATIONS, EXCEPT AS MODIFIED BY THE JOB SPECIAL PROVISIONS AND THAT AN EPOXY COATED #5, GRADE 60 REINFORCING BAR, PROJECTING 15" INTO NEW CONCRETE, SHALL BE USED.

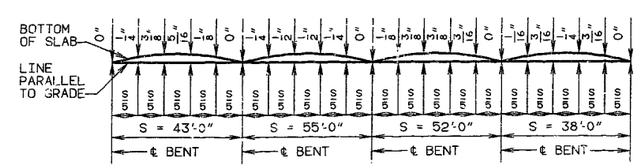

CAMBER DIAGRAM

DETAILED DEC. 1991
CHECKED DEC. 1991

NOTE: THIS DRAWING IS NOT TO SCALE. FOLLOW DIMENSIONS.

SHEET NO. 8 OF 14.

JACKSON COUNTY

A-1662R2

STATE	PROJ. NO.	SHEET NO.
MO.		151

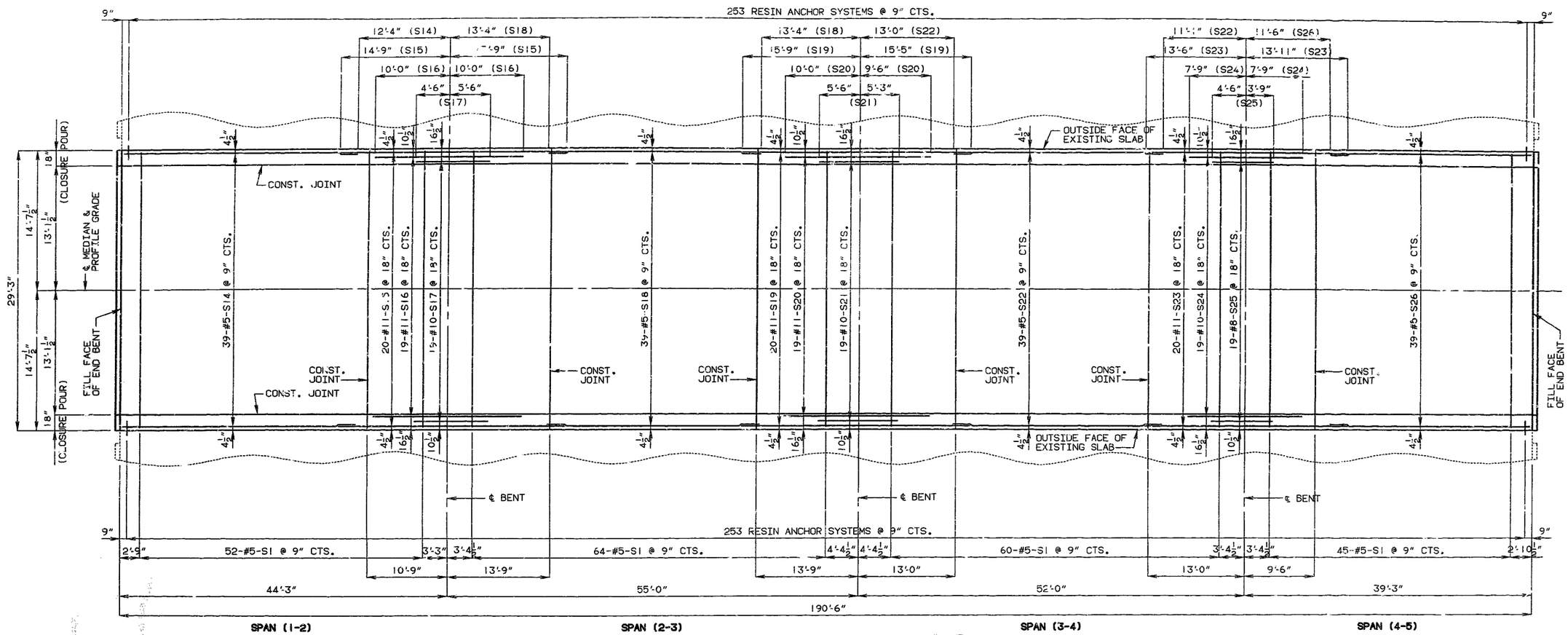

PLAN OF SLAB SHOWING TOP REINFORCEMENT

NOTE: LONGITUDINAL DIMENSIONS ARE HORIZONTAL.
FOR SECTIONS THRU SLAB, SEE SHEET NO. 10.
FOR DETAIL OF RESIN ANCHOR SYSTEMS, SEE SHEET NO. 8.

DETAILED DEC. 1991
CHECKED DEC. 1991

NOTE: THIS DRAWING IS NOT TO SCALE. FOLLOW DIMENSIONS.

JACKSON COUNTY

A-1662R2

#183

STATE	PROJ. NO.	SHEET NO.
MO.		152

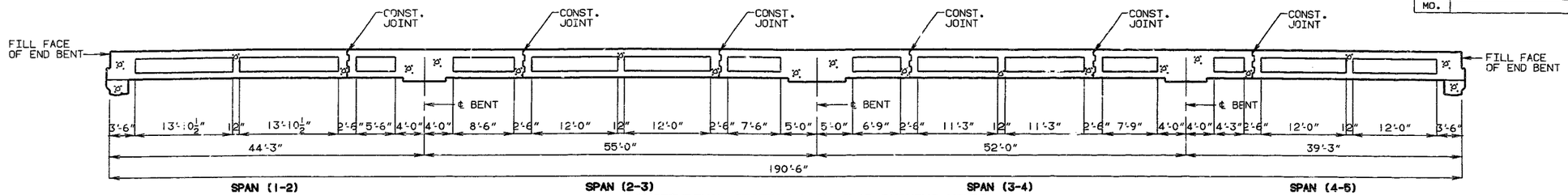

LONGITUDINAL SECTION THRU SLAB SHOWING VOIDS

NOTE: LONGITUDINAL DIMENSIONS ARE HORIZONTAL.

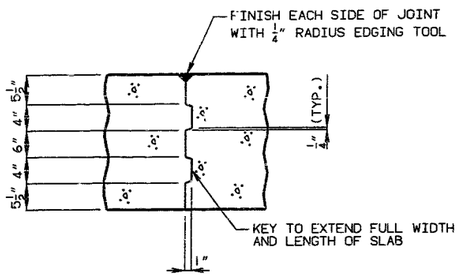

DETAIL OF SLAB CONSTRUCTION JOINT KEY

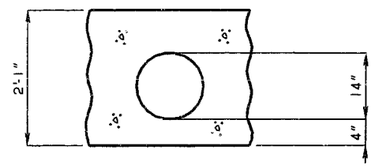

DETAIL OF VOID

NOTE: TUBES FOR PRODUCING VOIDS SHALL HAVE AN OUTSIDE DIAMETER OF 14.0" AND SHALL BE ANCHORED AT NOT MORE THAN 4'-0" CENTERS. FIBER TUBES SHALL HAVE A WALL THICKNESS OF NOT LESS THAN .25".
✱✱ USE EXPANSIVE CLASS B2 CONCRETE IN CLOSURE POUR (SEE SPECIAL PROVISIONS). RELEASE FORMS BEFORE CLOSURE POUR IS PLACED.

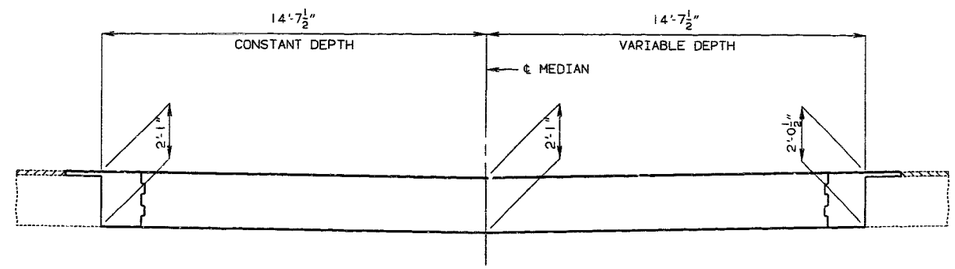

PART SECTION THRU SLAB SHOWING SLAB DEPTH

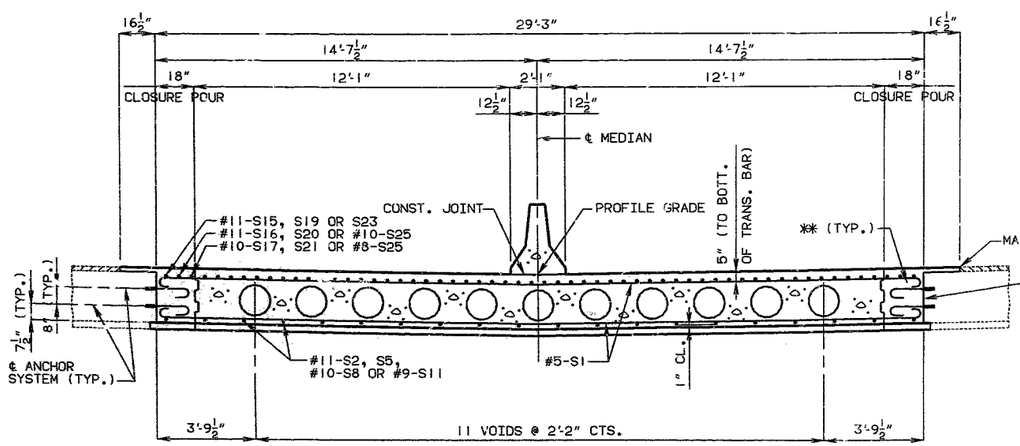

PART SECTION THRU SLAB NEAR INT. BENTS

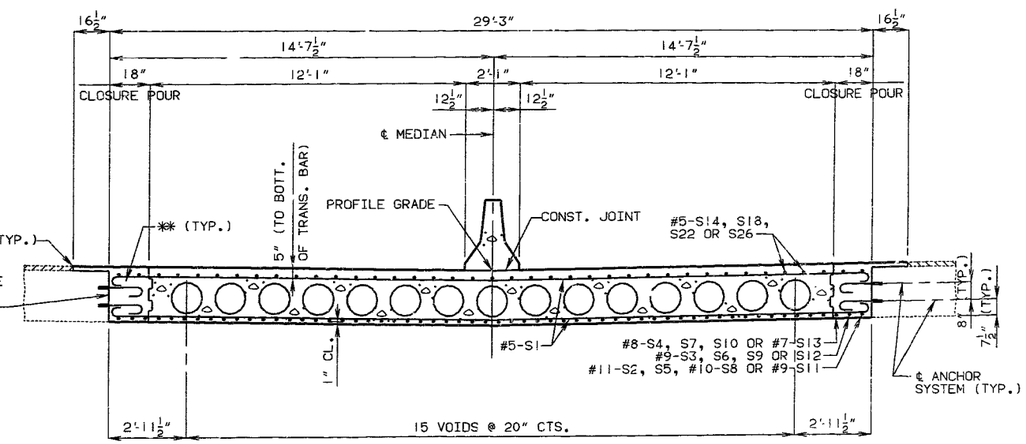

PART SECTION THRU SLAB NEAR CENTER OF SPANS

NOTE: ENTIRE ROADWAY NOT SHOWN FOR CLARITY, SEE SHEET NO. 2.
FOR DETAILS AND REINFORCEMENT OF MEDIAN BARRIER CURB, SEE SHEETS NO. 11 & 12.

DETAILED DEC. 1991
CHECKED DEC. 1991

NOTE: THIS DRAWING IS NOT TO SCALE. FOLLOW DIMENSIONS.

SHEET NO. 10 OF 14.

JACKSON COUNTY

A-1662R2

177184

STATE	PROJ. NO.	SHEET NO.
MO.		153

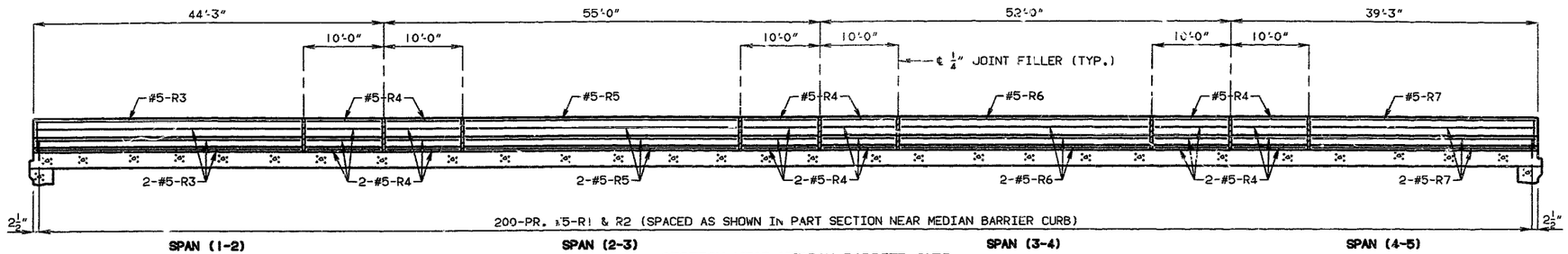

SECTION NEAR MEDIAN BARRIER CURB

NOTE: LONGITUDINAL DIMENSIONS ARE HORIZONTAL.

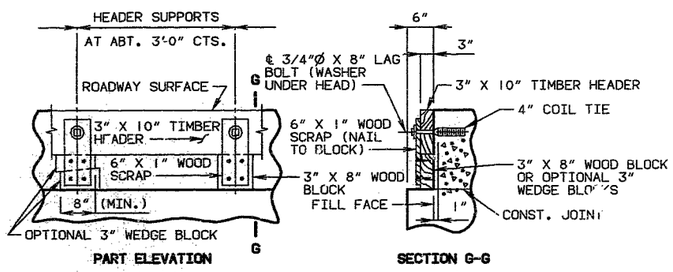

PART ELEVATION **SECTION G-G**

NOTE: COST OF TIMBER HEADERS COMPLETE IN PLACE TO BE INCLUDED IN CONTRACT UNIT PRICE FOR CONCRETE.

DETAILS OF TIMBER HEADER AT END BENTS

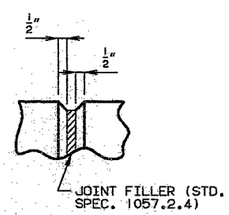

FILLED JOINT DETAIL

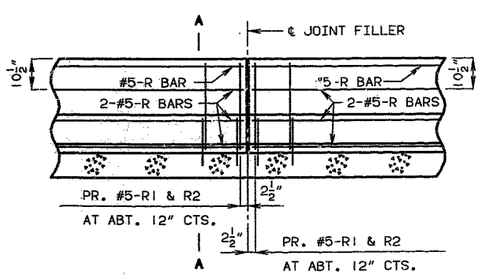

PART SECTION NEAR MEDIAN BARRIER CURB (CAST-IN-PLACE CONVENTIONAL FORMING OPTION)

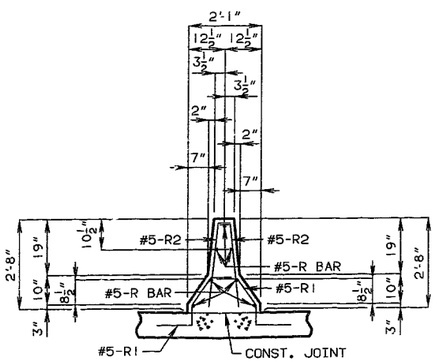

PART SECTION A-A

NOTE: USE A MINIMUM LAP OF 17" FOR #5 HORIZONTAL MEDIAN BARRIER CURB BARS.
THE CROSS-SECTIONAL AREA ABOVE THE SLAB = 2.96 SQ. FT.

NOTE:

TOP OF MEDIAN BARRIER CURB SHALL BE BUILT PARALLEL TO GRADE WITH MEDIAN BARRIER CURB JOINTS NORMAL TO GRADE.

ALL EXPOSED EDGES OF MEDIAN BARRIER CURB SHALL HAVE EITHER A 1/2" RADIUS OR A 3/8" BEVEL, UNLESS OTHERWISE NOTED.

WHEN THE MEDIAN BARRIER CURB IS BID BY LINEAR FEET, THE CONTRACT UNIT PRICE SHALL INCLUDE THE COST OF ALL CONCRETE AND REINFORCEMENT, COMPLETE-IN-PLACE.

CONCRETE IN THE MEDIAN BARRIER CURB SHALL BE CLASS B1.

MEASUREMENT OF MEDIAN BARRIER CURB IS TO THE NEAREST LINEAR FOOT FOR EACH STRUCTURE, MEASURED ALONG THE ℄ MEDIAN FROM FILL FACE OF END BENT TO FILL FACE OF END BENT.

B/C EL16,GS 3.30, , ,A
BARRIER CURB ELEVATION REVISED:
JAN. 1990 FEB. 1991

DETAILED DEC. 1991
CHECKED DEC. 1991

NOTE: THIS DRAWING IS NOT TO SCALE. FOLLOW DIMENSIONS.

JACKSON COUNTY A-1662R2

STATE	PROJ. NO.	SHEET NO.
MO.		154

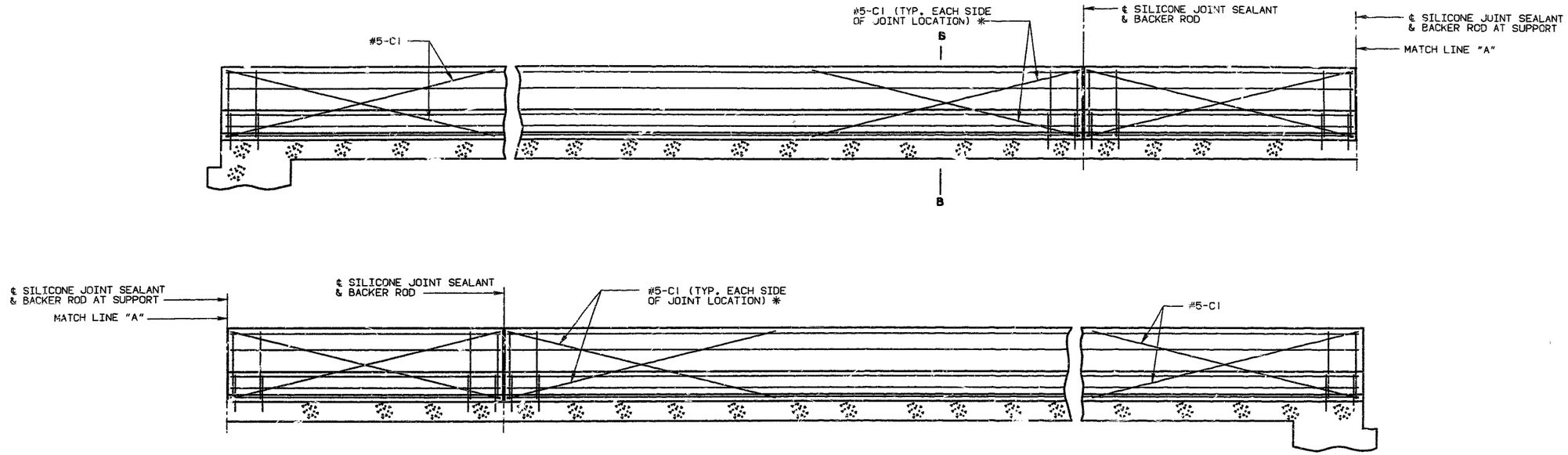

NOTE:

TOP OF MEDIAN BARRIER CURB SHALL BE BUILT PARALLEL TO GRADE WITH MEDIAN BARRIER CURB JOINTS NORMAL TO GRADE.

WHEN THE MEDIAN BARRIER CURB IS BID BY LINEAR FEET, THE CONTRACT UNIT PRICE SHALL INCLUDE THE COST OF ALL CONCRETE AND REINFORCEMENT, COMPLETE-IN-PLACE.

CONCRETE IN THE MEDIAN BARRIER CURB SHALL BE CLASS B1.

MEASUREMENT OF MEDIAN BARRIER CURB IS TO THE NEAREST LINEAR FOOT FOR EACH STRUCTURE, MEASURED ALONG THE OUTSIDE TOP OF SLAB FROM FILL FACE OF END BENT TO FILL FACE OF END BENT.

TYPICAL SECTION NEAR MEDIAN BARRIER CURB AT SUPPORT LOCATIONS (OPTIONAL SLIP-FORM BRIDGE MEDIAN BARRIER CURB)

NOTE:

JOINT SEALANT AND BACKER RODS SHALL BE USED ON ALL SLIP-FORM BRIDGE MEDIAN BARRIER CURBS INSTEAD OF JOINT FILLER.

PLASTIC WATERSTOP SHALL NOT BE USED WITH SLIP-FORM OPTION.

C1 BARS (SLIP-FORM OPTION ONLY) SHALL BE USED IN ADDITION TO CAST-IN-PLACE CONVENTIONAL FORMING REINFORCEMENT FOR BRIDGE MEDIAN BARRIER CURB.

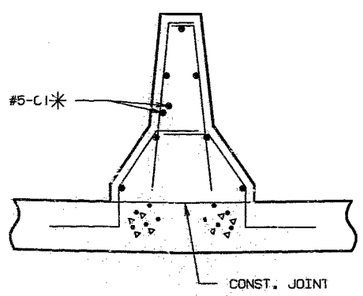

PART SECTION B-B

NOTE: ✳ EACH SIDE OF JOINT LOCATION AND AT END BENTS.

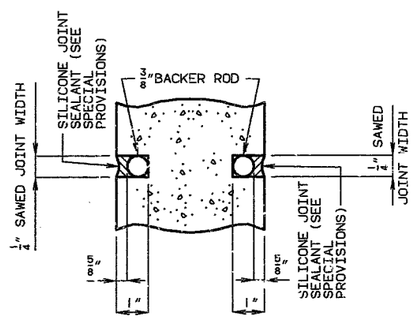

SECTION A-A

NOTE: COST OF SILICONE JOINT SEALANT AND BACKER ROD COMPLETE IN PLACE TO BE INCLUDED IN THE CONTRACT UNIT PRICE FOR MEDIAN BARRIER CURB.

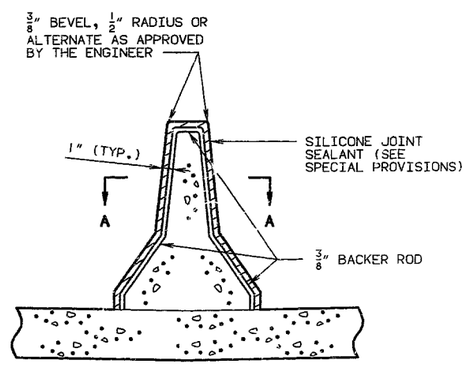

SECTION THRU JOINT

OPTIONAL SLIP-FORM BRIDGE MEDIAN BARRIER CURB

B/C SF16,GS 3.30, , ,A
BARRIER CURB ELEVATION REVISED:
FEB. 1991

DETAILED DEC. 1991
CHECKED DEC. 1991

NOTE: THIS DRAWING IS NOT TO SCALE. FOLLOW DIMENSIONS.

SHEET NO. 12 OF 14.

JACKSON COUNTY

A-1662R2

BILL OF REINFORCING STEEL

NO. REQ'D.	MARK NO. SIZE MARK	LOCATION	EPOXY (E)	SHAPE NO.	STIRRUP (S)	SUBSTR. (X)	VARIES (V)	NO. EACH	B FT. IN.	C FT. IN.	D FT. IN.	E FT. IN.	F FT. IN.	H FT. IN.	K FT. IN.	NOMINAL LENGTH FT. IN.	ACTUAL LENGTH FT. IN.	WEIGHT LBS.
		SUBSTRUCTURE																
		INT BT NO 2																
16	6U21	FOOTING		10	S	X				3 2.000	16.000					7 8	7 4	176
18	5U22	FOOTING		20		X			2 9.000							2 9	2 9	52
		INT BT NO 3																
16	6U31	FOOTING		10	S	X				3 2.000	16.000					7 8	7 4	176
18	5U32	FOOTING		20		X			2 9.000							2 9	2 9	52
		INT BT NO 4																
16	6U41	FOOTING		10	S	X				3 2.000	16.000					7 8	7 4	176
18	5U42	FOOTING		20		X			2 9.000							2 9	2 9	52
		SUPERSTRUCT																
		END BT NO 1																
8	6H11	BEAM		20					29 0.000							29 9	29 0	348
6	6H12	SLAB	E	20					29 0.000							29 0	29 0	261
27	5U11	BEAM		10	S					3 0.000	2 3.000					8 3	8 1	228
27	5U12	BEAM	E	10	S					4 0.000	2 3.000					10 3	10 1	284
39	6U13	BEAM	E	19	S				3 0.000	4 1.000						7 1	6 11	405
		INT BT NO 2																
14	9G21	DROP PANEL	E	18					29 0.000							31 6	31 6	1499
13	11G22	SLAB	E	18					29 0.000							32 2	32 2	2222
48	4P21	COLUMN		16					2 3.000							7 11	7 11	254
78	5U21	SLAB	E	10	S				10.000	22.000	3 10.000	10.000				9 2	8 9	712
18	8V21	COLUMN		19					24 0.000	16.000						25 4	25 2	1210
		INT BT NO 3																
14	9G31	DROP PANEL	E	18					29 0.000							31 5	31 6	1499
13	11G32	SLAB	E	18					29 0.000							32 2	32 2	2222
46	4P31	COLUMN		16					2 3.000							7 11	7 11	243
66	5U31	SLAB	E	10	S				10.000	22.000	5 2.000	10.000				10 6	10 1	694
18	8V31	COLUMN		19					22 9.000	16.000						24 1	23 11	1149

BILL OF REINFORCING STEEL

NO. REQ'D.	MARK NO. SIZE MARK	LOCATION	EPOXY (E)	SHAPE NO.	STIRRUP (S)	SUBSTR. (X)	VARIES (V)	NO. EACH	B FT. IN.	C FT. IN.	D FT. IN.	E FT. IN.	F FT. IN.	H FT. IN.	K FT. IN.	NOMINAL LENGTH FT. IN.	ACTUAL LENGTH FT. IN.	WEIGHT LBS.
		INT BT NO 4																
14	9G41	DROP PANEL	E	18					29 0.000							31 6	31 6	1499
12	11G42	SLAB	E	18					29 0.000							32 2	32 2	2051
44	4P41	COLUMN		16					2 3.000							7 11	7 11	233
78	5U41	SLAB	E	10	S				10.000	22.000	3 10.000	10.000				9 2	8 9	712
18	6V41	COLUMN		19					21 6.000	16.000						22 10	22 8	1089
		END BT NO 4																
8	6H51	BEAM		20					29 0.000							29 0	29 0	348
4	6H52	SLAB	E	20					29 0.000							29 0	29 0	174
27	5U51	BEAM		10	S					3 0.000	2 3.000					8 3	8 1	228
27	5U52	BEAM	E	10	S					4 0.000	2 3.000					10 3	10 1	284
39	6U53	BEAM	E	19	S				3 0.000	4 1.000						7 1	6 11	405
28	5C1	MEDIAN BARR.	E	20					10 0.000							10 0	10 0	292
400	5R1	MEDIAN BARR.	E	27	S					8.000	11.125	7.000	12.000	9.125	6.375	3 2	3 0	1252
400	5R2	MEDIAN BARR.	E	15	S				2 6.125	3.500				2 6.000	3.000	2 10	2 9	1147
7	5R3	MEDIAN BARR.	E	20					34 0.000							34 0	34 0	248
42	5R4	MEDIAN BARR.	E	20					9 9.000							9 9	9 9	427
7	5R5	MEDIAN BARR.	E	20					34 9.000							34 9	34 9	254
7	5R6	MEDIAN BARR.	E	20					31 9.000							31 9	31 9	232
7	5R7	MEDIAN BARR.	E	20					29 0.000							29 0	29 0	212
442	5S1	SLAB	E	18					29 0.000							30 2	30 2	13907
20	11S2	SLAB	E	20					47 5.000							47 5	47 5	9036
19	9S3	SLAB	E	20					32 5.000							32 5	32 5	2094
19	8S4	SLAB	E	20					21 3.000							21 3	21 3	1078
60	11S5	SLAB	E	20					24 10.000							24 10	24 10	7916
19	9S6	SLAB	E	20					32 6.000							32 6	32 6	2100
19	8S7	SLAB	E	20					20 6.000							20 6	20 6	1050
20	10S8	SLAB	E	20					56 11.000							56 11	56 11	4898
21	9S9	SLAB	E	20					30 0.000							30 0	30 0	2142
21	8S10	SLAB	E	20					19 6.000							19 6	19 6	1093
20	9S11	SLAB	E	20					41 4.000							41 4	41 4	2811
19	9S12	SLAB	E	20					30 5.000							30 5	30 5	1965
21	7S13	SLAB	E	20					19 0.000							19 0	19 0	816
39	5S14	SLAB	E	20					31 10.000							31 10	31 10	1295
20	11S15	SLAB	E	20					30 6.000							30 6	30 6	3241
19	11S16	SLAB	E	20					20 0.000							20 0	20 0	2019
19	10S17	SLAB	E	20					10 0.000							10 0	10 0	818
39	5S18	SLAB	E	20					28 4.000							28 4	28 4	1153
20	11S19	SLAB	E	20					31 2.000							31 2	31 2	3312
21	11S20	SLAB	E	20					19 6.000							19 6	19 6	2176
21	10S21	SLAB	E	20					10 9.000							10 9	10 9	971
39	5S22	SLAB	E	20					27 11.000							27 11	27 11	1136
20	11S23	SLAB	E	20					27 5.000							27 5	27 5	2913
19	10S24	SLAB	E	20					15 6.000							15 6	15 6	1267
19	8S25	SLAB	E	20					8 3.000							8 3	8 3	419
41	5S26	SLAB	E	20					27 8.000							27 8	27 8	1183

Two additional H12, S9, S10, S13, S20, S21 & S26 are included in the Bar Bill for testing.

STATE	PROJ. NO.	SHEET NO.
MO.		155

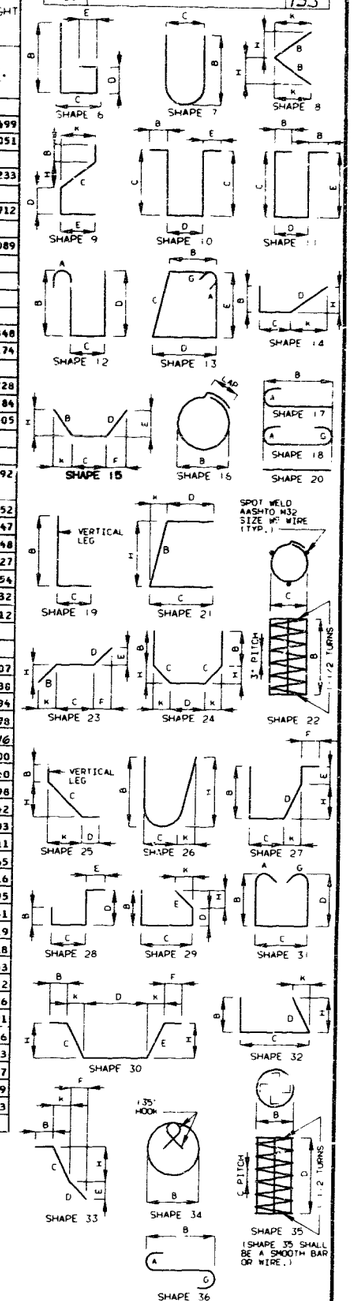

BENDING DIAGRAMS

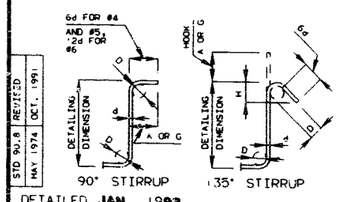

STIRRUP HOOK DIMENSIONS				
GRADES 40 - 50 - 60 KSI				
BAR SIZE	D (IN.)	90° HOOK	135° HOOK	
		HOOK A OR G	HOOK A OR G	APPROX. H
#4	2"	4-1/2"	5-1/2"	3"
#5	2-1/2"	6"	5-1/2"	3-3/4"
#6	4-1/2"	12"	8"	4-1/2"

NOTE: UNLESS OTHERWISE NOTED DIAMETER "D" IS THE SAME FOR ALL BENDS AND HOOKS ON A BAR.

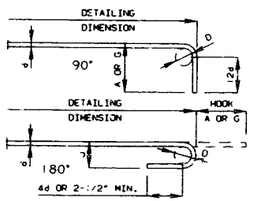

END HOOK DIMENSIONS				
BAR SIZE	D (IN.)	ALL GRADES		
		180 HOOKS		90 HOOKS
		A OR G	J	A OR G
#3	2-1/4"	5"	3"	6"
#4	3"	6"	4"	8"
#5	3-3/4"	7"	5"	10"
#6	4-1/2"	8"	6"	12"
#7	5-1/4"	10"	7"	14"
#8	6"	11"	8"	16"
#9	9-1/2"	15"	11-3/4"	19"
#10	10-3/4"	17"	13-1/4"	22"
#11	12"	19"	14-3/4"	2'-0"
#14	18-1/4"	2'-3"	21-3/4"	2'-7"

NOTE:
ALL STANDARD HOOKS AND BENDS OTHER THAN 180 DEG. TO BE BENT WITH THE SAME PROCEDURE AS FOR 90 DEG. STD. HOOKS.
HOOKS AND BENDS SHALL BE IN ACCORDANCE WITH THE PROCEDURES AS SHOWN ON THIS SHEET.
E = EPOXY COATED REINFORCEMENT.
S = STIRRUP.
X = BAR IS INCLUDED IN SUBSTRUCTURE QUANTITIES.
V = BAR DIMENSIONS VARY IN EQUAL INCREMENTS BETWEEN DIMENSIONS SHOWN ON THIS LINE AND THE FOLLOWING LINE.
NO. EA. = NUMBER OF BARS OF EACH LENGTH.
NOMINAL LENGTHS ARE BASED ON OUT TO OUT DIMENSIONS SHOWN IN BENDING DIAGRAMS AND ARE LISTED FOR FABRICATORS USE. (NEAREST INCH)
ACTUAL LENGTHS ARE MEASURED ALONG CENTERLINE BAR TO THE NEAREST INCH.
PAYWEIGHTS ARE BASED ON ACTUAL LENGTHS.
FOUR ANGLE OR CHANNEL SPACERS ARE REQUIRED FOR EACH COLUMN SPIRAL. SPACERS ARE TO BE PLACED ON INSIDE OF SPIRALS. LENGTH AND WEIGHT OF COLUMN SPIRALS DO NOT INCLUDE SPLICES OR SPACERS.
REINFORCING STEEL (GRADE 60) = FY 60,000 PSI.

STD 90.8	REVISED
MAY. 1974	OCT. 1991

DETAILED JAN. 1992
CHECKED JAN. 1992

NOTE: THIS DRAWING IS NOT TO SCALE. FOLLOW DIMENSIONS.

SHEET NO. 13 OF 14.

JACKSON COUNTY

A-1662R2

180 137

STATE	PROJ. NO.	SHEET NO.
MO.		156

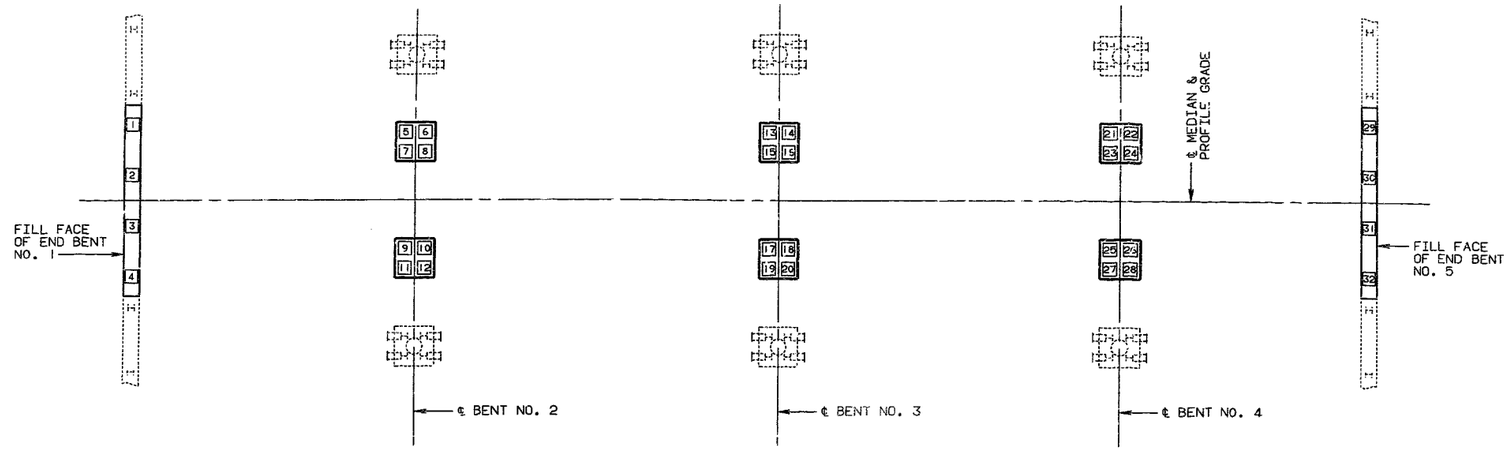

PART PLAN SHOWING PILE NUMBERING FOR RECORDING "AS BUILT" PILE DATA

"AS BUILT" PILE DATA

PILE NO.	LENGTH IN PLACE (FT.)	COMPUTED BEARING (TONS)	REMARKS
			END BENT NO. 1
1			
2			
3			
4			
			INTERMEDIATE BENT NO. 2
5			
6			
7			
8			
9			
10			
11			
12			
			INTERMEDIATE BENT NO. 3
13			
14			
15			
16			
17			
18			
19			
20			

"AS BUILT" PILE DATA

PILE NO.	LENGTH IN PLACE (FT.)	COMPUTED BEARING (TONS)	REMARKS
			INTERMEDIATE BENT NO. 4
21			
22			
23			
24			
25			
26			
27			
28			
			END BENT NO. 5
29			
30			
31			
32			

NOTE: INDICATE IN REMARK COLUMN:
A.) IF PILING WERE DRIVEN TO PRACTICAL REFUSAL.
B.) PILE BATTER IF OTHER THAN SHOWN ON BENT DETAIL SHEET.
C.) TYPE OF PILING USED.

NOTE: THIS SHEET TO BE COMPLETED BY MHTD CONSTRUCTION PERSONNEL.

DETAILED SEPT. 1992
CHECKED SEPT. 1992

NOTE: THIS DRAWING IS NOT TO SCALE. FOLLOW DIMENSIONS.

JACKSON COUNTY

A-1662R2

MISSOURI HIGHWAY AND TRANSPORTATION COMMISSION

STATE	PROJ. NO.	NO.
MO.	J410807	43
SEC./SEC. 12	WP 48N	RGE 33W

FINAL PLANS

WIDEN SUBSTRUCTURE & SUPERSTRUCTURE
EXISTING (43'-55'-52'-38') CONTINUOUS CONCRETE SLAB SPANS (VOIDED)

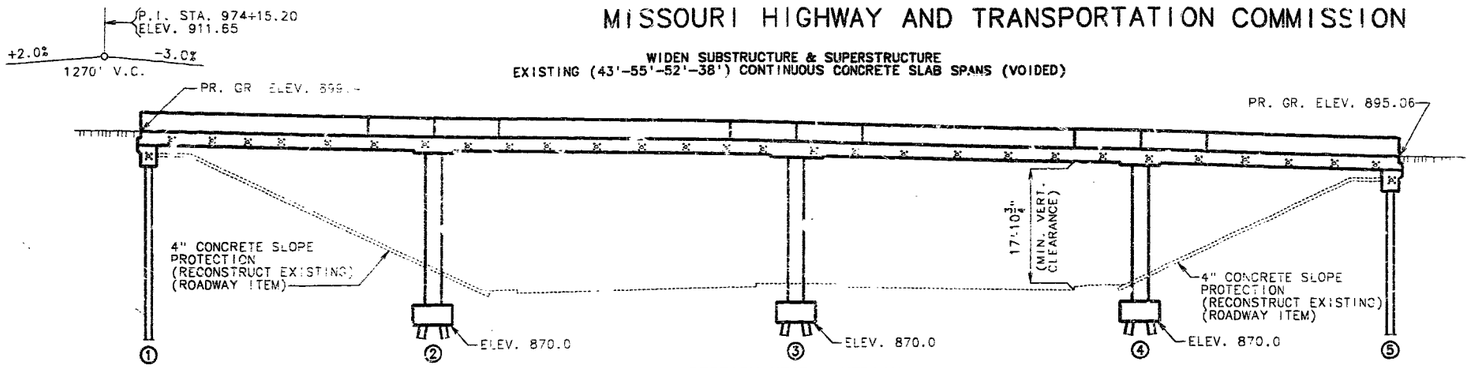

SECTION NEAR ℄ MEDIAN

NOTE: ROADWAY FILL SHALL BE COMPLETED TO [illegible] SECTION AND UP TO THE ELEVATION OF THE BOTTOM OF BEAM WITHIN THE LIMITS OF THE STRUCTURE AND FOR [illegible] FEET IN BACK OF THE FILL FACE OF THE END BENTS BEFORE DRIVEN FOR ANY BENTS FALLING WITH THE EMBANKMENT [illegible]

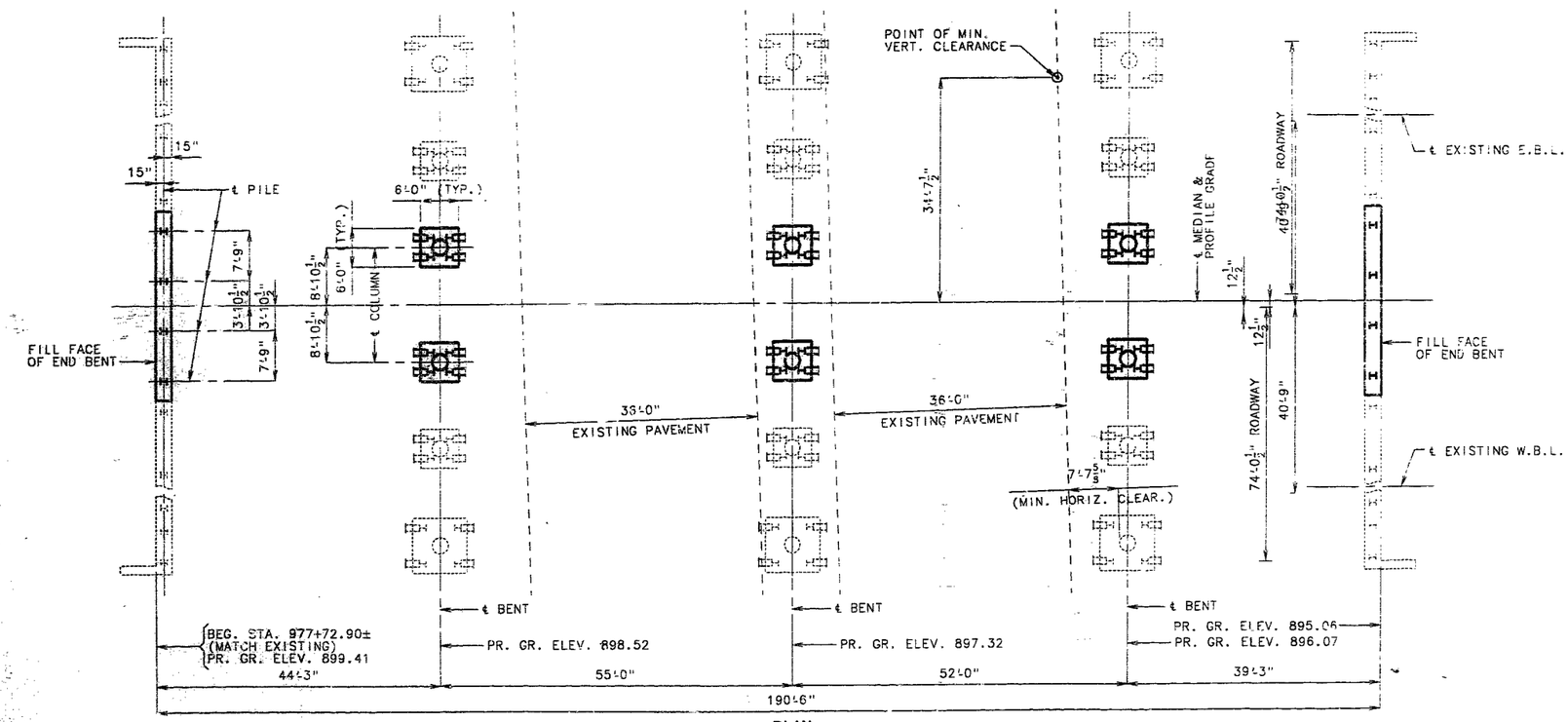

PLAN

NOTE: FOR GENERAL NOTES, ESTIMATED QUANTITIES AND PILE DATA, SEE SHEET NO. 2.
FOR BORING DATA AND LOCATION, SEE SHEETS NO. 1 & 7 OF THE ORIGINAL PLANS.

NOTICE AND DISCLAIMER REGARDING BORING LOG DATA

THE LOCATIONS OF ALL SUBSURFACE BORINGS FOR THIS STRUCTURE ARE SHOWN ON SHEET NO. 1 OF THE EXISTING PLANS FOR BRIDGES NO. A-1662 & A-1662R1. BORING DATA FOR THE NUMBERED LOCATIONS IS SHOWN ON SHEET NO. 7 ON A-1662 AND SHEET NO. 2 ON A-1662R1. THE BORING DATA FOR ALL LOCATIONS, AS WELL AS ANY OTHER BORING LOGS OR OTHER FACTUAL RECORDS OF SUBSTRUCTURE DATA AND INVESTIGATIONS PERFORMED BY THE DEPARTMENT FOR THE DESIGN OF THE PROJECT, IS AVAILABLE FROM THE DISTRICT MATERIALS ENGINEER UPON WRITTEN REQUEST AS OUTLINED IN THE PROJECT SPECIAL PROVISIONS. NO GREATER SIGNIFICANCE OR WEIGHT SHOULD BE GIVEN TO THE BORING DATA DEPICTED ON THE PLAN SHEETS THAT TO SUBSURFACE DATA AVAILABLE FROM THE DISTRICT OR ELSEWHERE.

THE COMMISSION DOES NOT REPRESENT OR WARRANT THAT ANY SUCH BORING DATA ACCURATELY DEPICTS THE CONDITIONS TO BE ENCOUNTERED IN CONSTRUCTING THIS PROJECT. A CONTRACTOR ASSUMES ALL RISKS IT MAY ENCOUNTER IN BASING ITS BID PRICES, TIME OR SCHEDULE OF PERFORMANCE ON THE BORING DATA DEPICTED HERE OR THOSE AVAILABLE FROM THE DISTRICT, OR ON ANY OTHER DOCUMENTATION NOT EXPRESSLY WARRANTED, WHICH THE CONTRACTOR MAY OBTAIN FROM THE COMMISSION.

B.M. ELEV. **902.54** CHISELED "□" @ N.E. COR. BR. **PARAPET W.B.L.**
BR. **#A-1662R2** 67' RT. 977+77±

REPAIRS TO BRIDGE OVER HOLMES ROAD

STATE ROAD FROM KANSAS STATE LINE TO RTE. 71
ABOUT 1.4 MILES EAST OF KANSAS STATE LINE

PROJECT NO. **STA. 977+72.90**
JOB NO. J410807 **RTE. I-435**

JACKSON COUNTY

DATE 3/1/94

STD.
STD. 706.35
A-1662R2

DESIGNED DEC. 1991
DETAILED DEC. 1991
CHECKED JAN. 1992

NOTE: THIS DRAWING IS NOT TO SCALE. FOLLOW DIMENSIONS.

SHEET NO. 1 OF 14.

188 129

STATE	PROJ. NO.	SHEET NO.
MO.	34IB007	144

FINAL PLANS

GENERAL NOTES:

DESIGN SPECIFICATIONS: A.A.S.H.T.O.-1992
LOAD FACTOR DESIGN
SEISMIC PERFORMANCE CATEGORY A

DESIGN LOADING:
HS20-44 MODIFIED 24,000# TANDEM AXLE
NO FUTURE WEARING SURFACE
EARTH 120#/CU. FT., EQUIVALENT FLUID PRESSURE 45#/CU. FT.

DESIGN UNIT STRESSES:
CLASS B CONCRETE (FOOTINGS) F'C=3,000 PSI.
CLASS B1 CONCRETE (MEDIAN BARRIER CURB, INT. BT. COLUMNS AND END BENTS BELOW LOWER CONST. JOINT) F'C=4,000 PSI.
CLASS B2 CONCRETE (SUPERSTRUCTURE EXCEPT MEDIAN BARRIER CURB) F'C=4,000 PSI.
REINFORCING STEEL (GRADE 60) FY=60,000 PSI.
STEEL PILE FB=9,000 PSI.

REINFORCING STEEL:
MINIMUM CLEARANCE TO REINFORCING STEEL SHALL BE 1-1/2", UNLESS OTHERWISE SHOWN.
BARS BONDED IN OLD CONCRETE NOT REMOVED SHALL BE CLEANLY STRIPPED AND EMBEDDED INTO NEW CONCRETE WHERE POSSIBLE. IF LENGTH IS AVAILABLE, OLD BARS SHALL EXTEND INTO NEW CONCRETE AT LEAST 40 DIAMETERS FOR SMOOTH BARS AND 30 DIAMETERS FOR DEFORMED BARS, UNLESS OTHERWISE NOTED.

TRAFFIC:
TRAFFIC OVER STRUCTURE TO BE MAINTAINED DURING CONSTRUCTION.

CONSTRUCTION CLEARANCE:
FALSEWORK OVER EXISTING LANES SHALL BE CONSTRUCTED WITH A MINIMUM VERTICAL CLEARANCE OF 14'-9" FROM CROWN OF EXISTING LANES AND A MINIMUM LATERAL CLEARANCE OF 28'-0" CENTERED ON EACH EXISTING LANE.

JOINT FILLER:
ALL JOINT FILLER SHALL MEET THE REQUIREMENTS OF STD. SPEC. 1057.2.4, EXCEPT AS NOTED.

NOTE: OUTLINE OF OLD WORK IS INDICATED BY LIGHT DASHED LINES. HEAVY LINES INDICATE NEW WORK.

THE 5/8" DIAMETER RESIN ANCHOR SYSTEMS SHALL HAVE A MINIMUM ULTIMATE PULLOUT STRENGTH OF 15,500 LBS. IN CONCRETE WITH F'C=4,000 PSI, SEE SPECIAL PROVISIONS.

FINAL QUANTITIES

ITEM		SUBSTR.	SUPERSTR.	TOTAL
CURB REMOVAL (BRIDGES)	LIN. FT.		403	403
PARTIAL REMOVAL OF SUBSTRUCTURE CONCRETE	LUMP SUM			1
CLASS 1 EXCAVATION	CU. YD.	145.5		145.5
STRUCTURAL STEEL PILES (10")	LIN. FT.	617		617
CLASS B CONCRETE (SUBSTR.)	CU. YD.	24.0		24.0
CLASS B1 CONCRETE (SUPERSTR. VOIDED SLABS)	CU. YD.		43.1	43.1
CLASS B2 CONCRETE (SUPERSTR. VOIDED SLABS)	CU. YD.		361.4	361.4
* MEDIAN BARRIER CURB	LIN. FT.		191	191
REINFORCING STEEL (BRIDGES)	LB.	690	5,970	6,660
REINFORCING STEEL (EPOXY COATED)	LB.		83,730	83,730
Contingent Item				
Repairing Concrete Deck	Lump Sum		1	1

NOTE: ALL REINFORCEMENT IN END BENTS AND IN COLUMNS AT INT. BENTS IS INCLUDED IN SUPERSTRUCTURE QUANTITIES.
* MEDIAN BARRIER CURB SHALL BE CAST-IN-PLACE OPTION ~~OR SLIP-FORM OPTION~~.
ALL CONCRETE IN END BENTS AND INTERMEDIATE BENT COLUMNS IS INCLUDED WITH SUPERSTRUCTURE QUANTITIES.

PILE DATA

BENT NO.		1	2	3	4	5
PILE TYPE AND SIZE		HP 10X42				
NUMBER		4	8	8	8	4
APPROXIMATE LENGTH	FT.	30	11 38	15 37	16 27	37 35
DESIGN BEARING	TONS	41	53	52	49	38
HAMMER ENERGY REQUIRED	FT.-LBS.	9,200	12,500	12,300	11,600	8,400

NOTE: MINIMUM ENERGY REQUIREMENT OF HAMMER IS BASED ON PLAN LENGTH AND DESIGN BEARING VALUE OF PILES.
ALL PILES SHALL BE DRIVEN TO PRACTICAL REFUSAL.

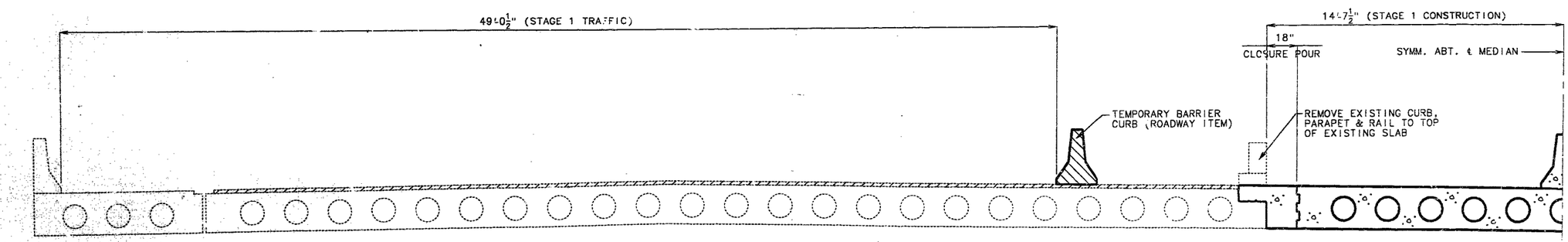

DETAILS OF STAGE CONSTRUCTION

STATE	PROJ. NO.	SHEET NO.
MO.	J4I0807	145

FINAL PLANS

NOTE: SLAB DEPTH VARIES, SEE SHEET NO. 10.

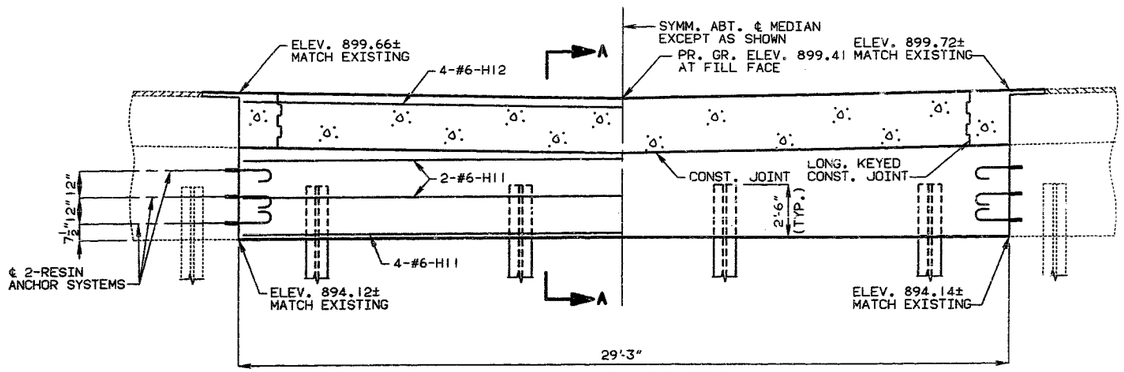

SECTION NEAR END BENT

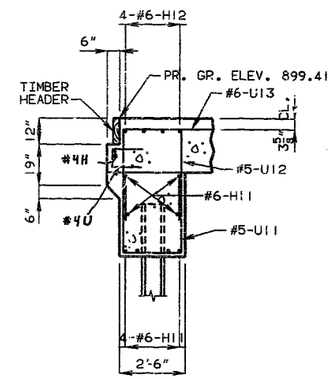

SECTION A-A

NOTE: FOR DETAILS OF TIMBER HEADER, SEE SHEET NO. 11.
FOR DETAIL OF RESIN ANCHOR SYSTEM, SEE SHEET NO. 8.

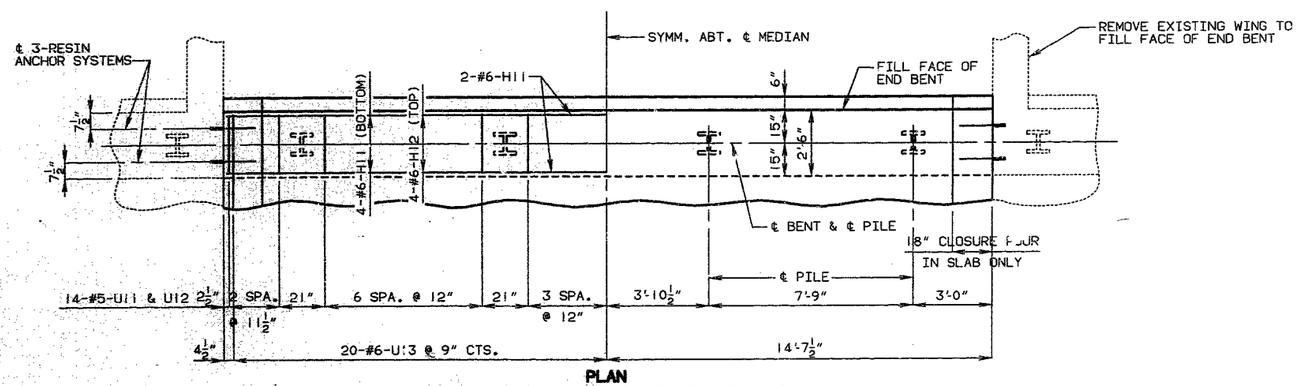

PLAN

DETAILS OF END BENT NO. 1

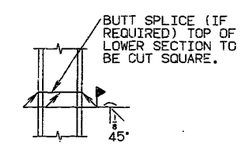

STEEL PILE SPLICE

SUBSTRUCTURE QUANTITY TABLE FOR BENT NO. 1		
ITEM		QUANTITY
CLASS I EXCAVATION	CU. YD.	111
STRUCTURAL STEEL PILES (10")	LIN. FT.	121

NOTE: WORK THIS TABLE WITH ESTIMATED QUANTITIES AS SHOWN ON SHEET NO. 2.

170-131

DETAILED DEC. 1991
CHECKED JAN. 1992

NOTE: THIS DRAWING IS NOT TO SCALE. FOLLOW DIMENSIONS.

JACKSON COUNTY

A-1662R2

STATE	PROJ. NO.	SHEET NO.
MD.	141808.07	146

FINAL PLANS

NOTE: SLAB DEPTH VARIES, SEE SHEET NO. 10.

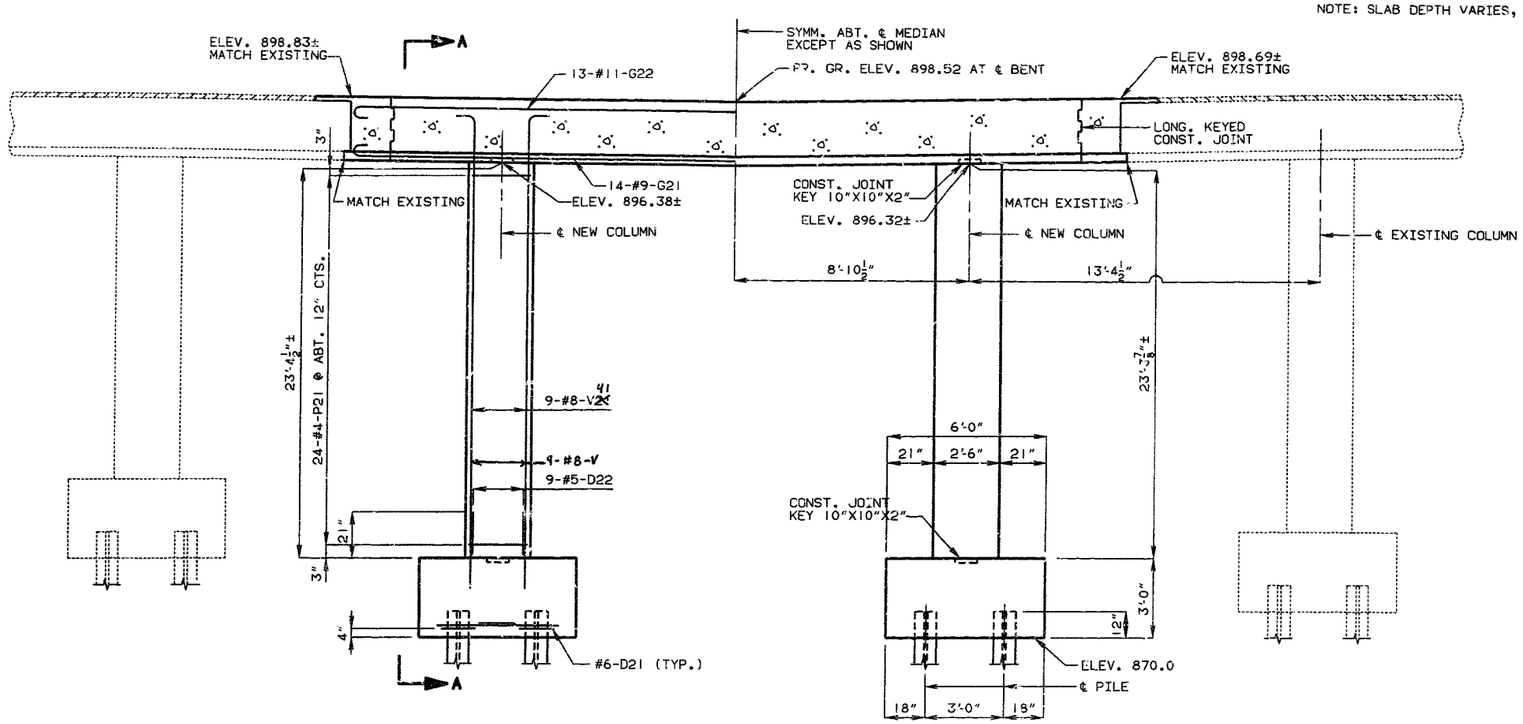

SECTION NEAR INTERMEDIATE BENT

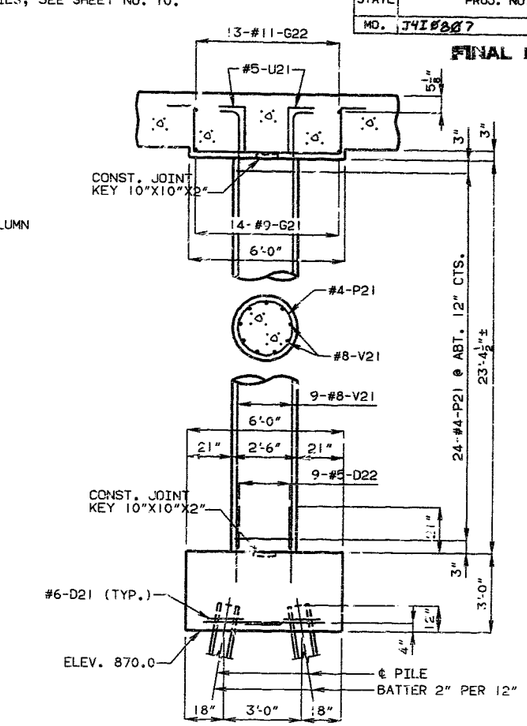

SECTION A-A

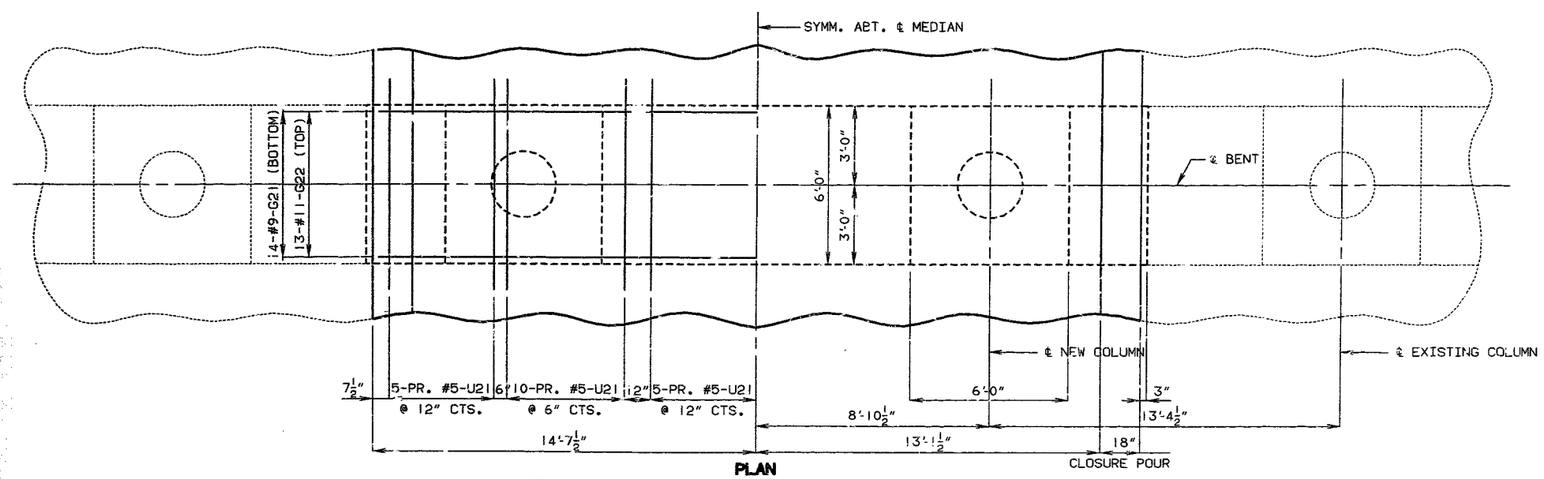

PLAN

DETAILS OF INTERMEDIATE BENT NO. 2

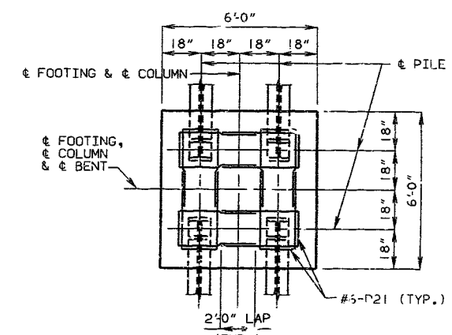

PLAN OF FOOTING SHOWING REINFORCEMENT

SUBSTRUCTURE QUANTITY TABLE FOR BENT NO. 2

ITEM		QUANTITY
CLASS I EXCAVATION	CU. YD.	47.6
STRUCTURAL STEEL PILES (10")	LIN. FT.	103
CLASS B CONCRETE (SUBSTRUCTURE)	CU. YD.	8.0
REINFORCING STEEL (BRIDGES)	LB.	230

NOTE: WORK THIS TABLE WITH ESTIMATED QUANTITIES AS SHOWN ON SHEET NO. 2.

DETAILED DEC. 1991
CHECKED JAN. 1992

NOTE: THIS DRAWING IS NOT TO SCALE. FOLLOW DIMENSIONS.

SHEET NO. 4 OF 1.

JACKSON COUNTY

A-1662R2

141132

NOTE: SLAB DEPTH VARIES, SEE SHEET NO. 10.

STATE	PROJ. NO.	SHEET NO.
MO.	J4I0807	147

FINAL PLANS

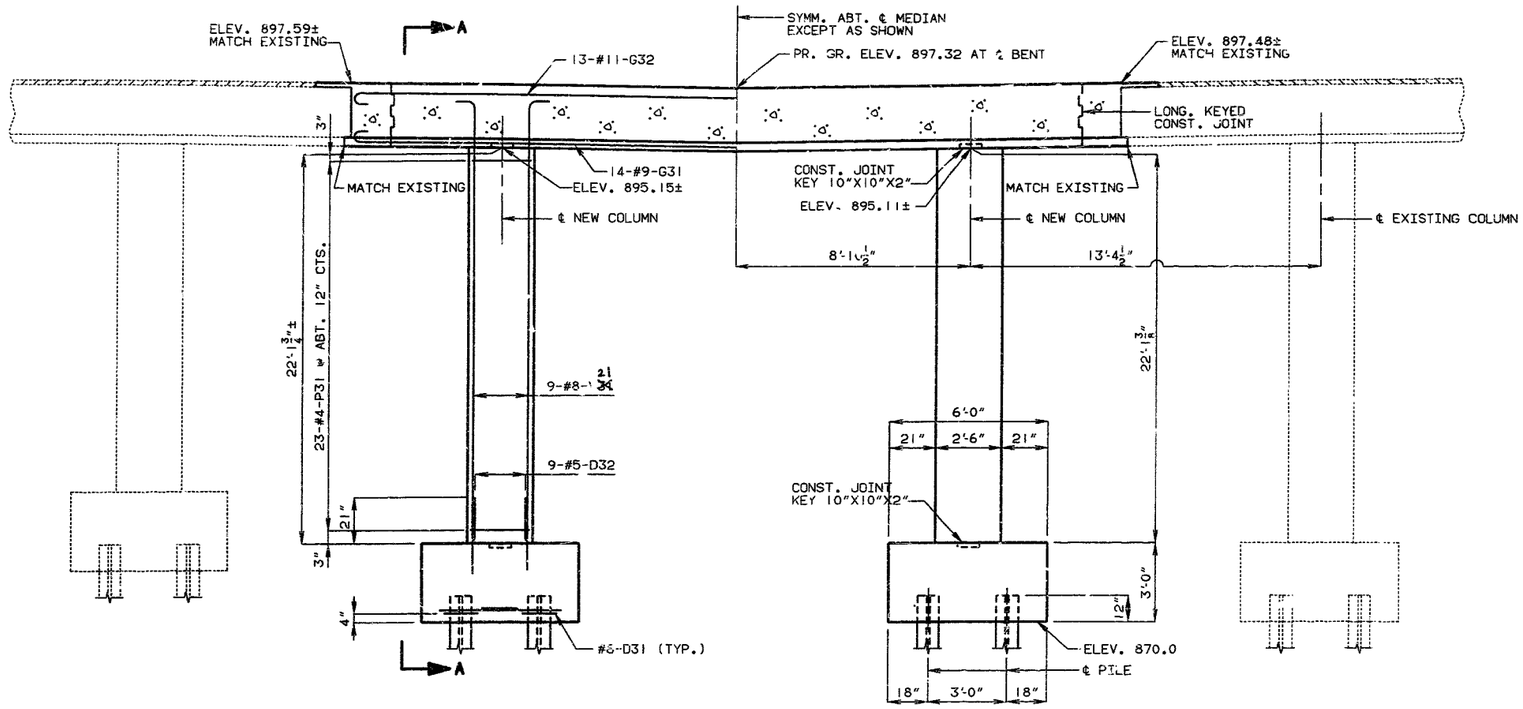

SECTION NEAR INTERMEDIATE BENT

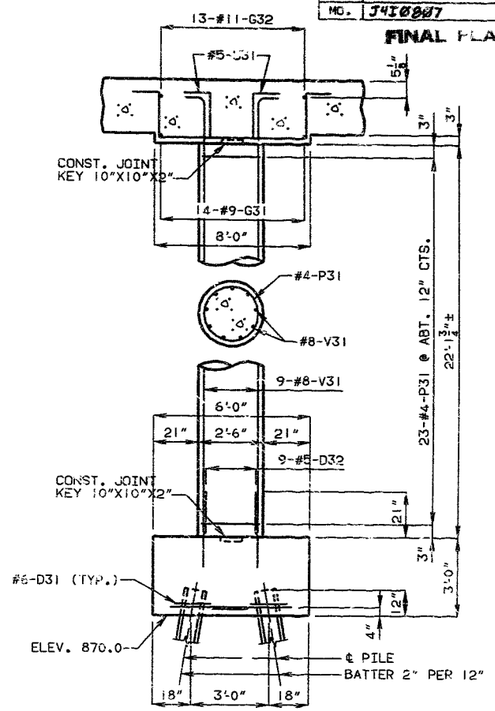

SECTION A-A

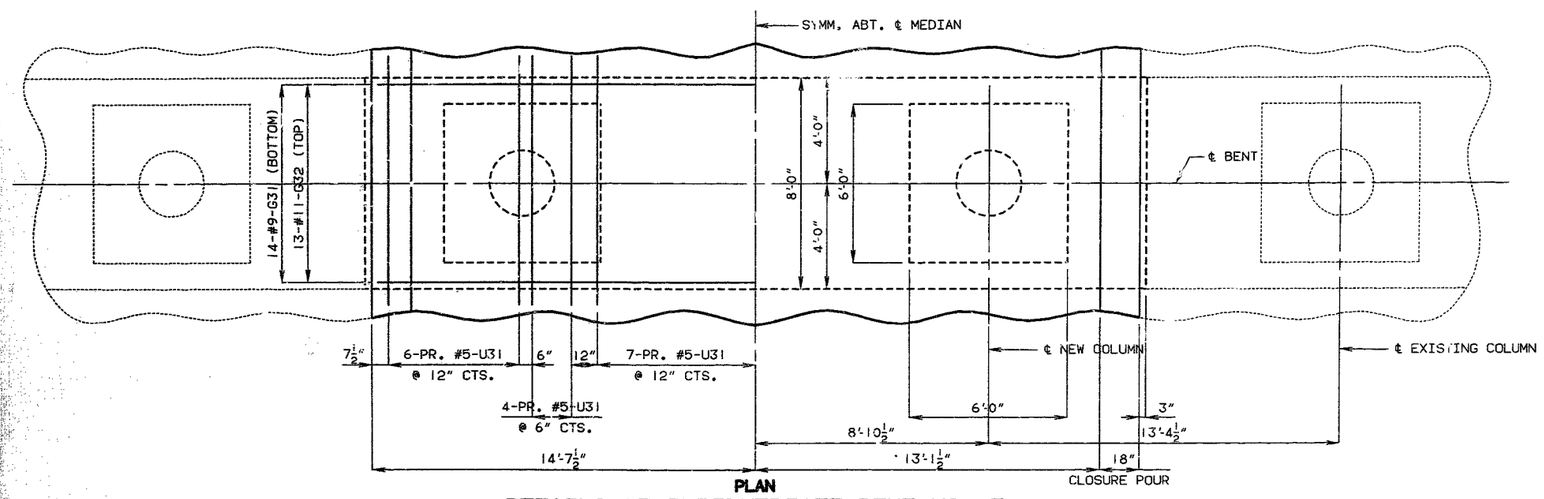

PLAN

DETAILS OF INTERMEDIATE BENT NO. 3

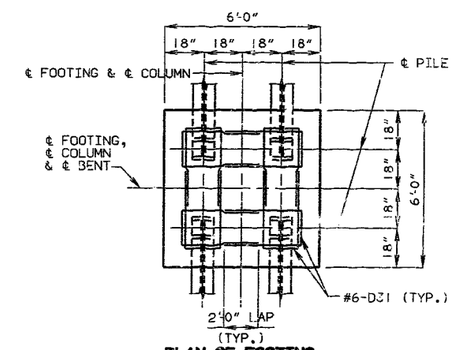

PLAN OF FOOTING SHOWING REINFORCEMENT

SUBSTRUCTURE QUANTITY TABLE FOR BENT NO. 3		
ITEM		QUANTITY
CLASS I EXCAVATION	CU. YD.	35.3
STRUCTURAL STEEL PILES (10")	LIN. FT.	118
CLASS B CONCRETE (SUBSTRUCTURE)	CU. YD.	8.0
REINFORCING STEEL (BRIDGES)	LB.	230

NOTE: WORK THIS TABLE WITH ESTIMATED QUANTITIES AS SHOWN ON SHEET NO. 2.

DETAILED DEC. 1991
CHECKED JAN. 1992

NOTE: THIS DRAWING IS NOT TO SCALE. FOLLOW DIMENSIONS.

JACKSON COUNTY

A-1662R2

A72133

NOTE: SLAB DEPTH VARIES, SEE SHEET NO. 10.

STATE	PROJ. NO.	SHEET NO.
MO.	J4I0807	148

FINAL PLANS

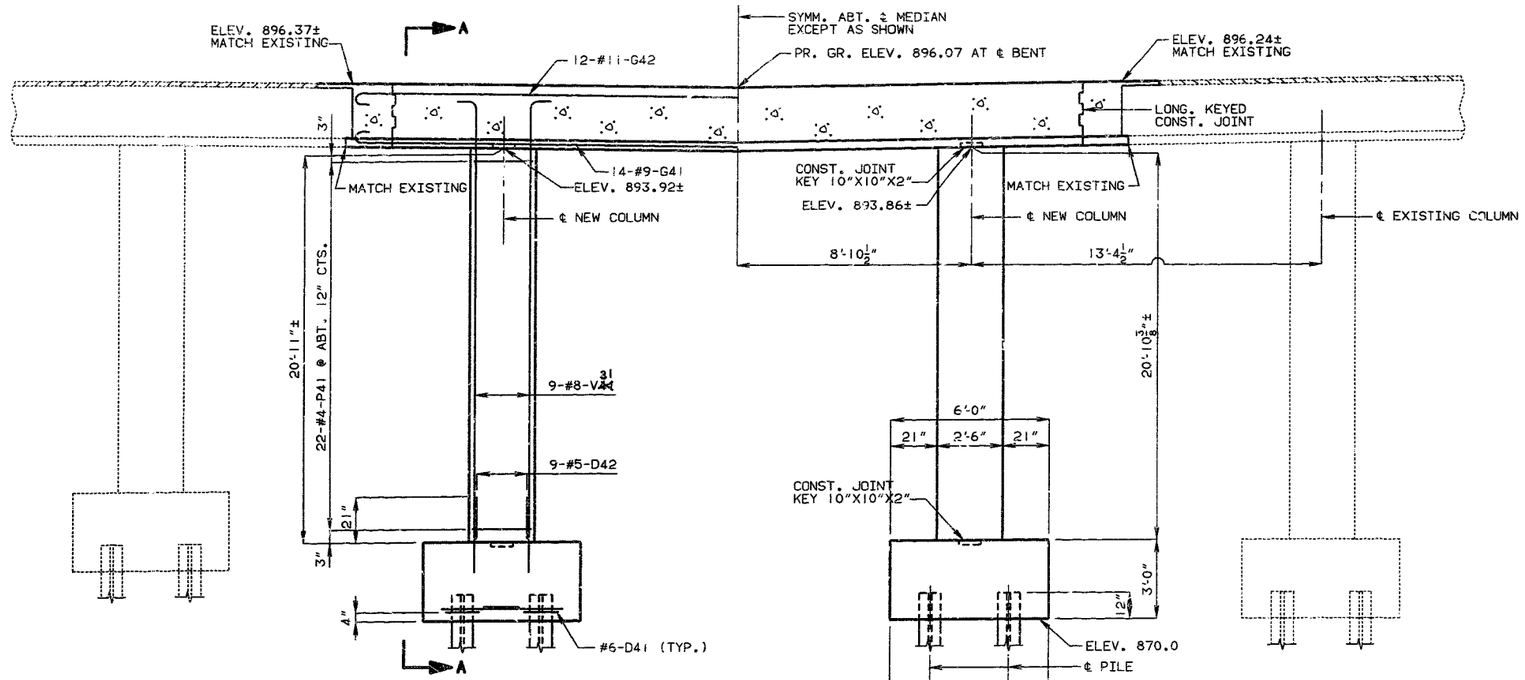

SECTION NEAR INTERMEDIATE BENT

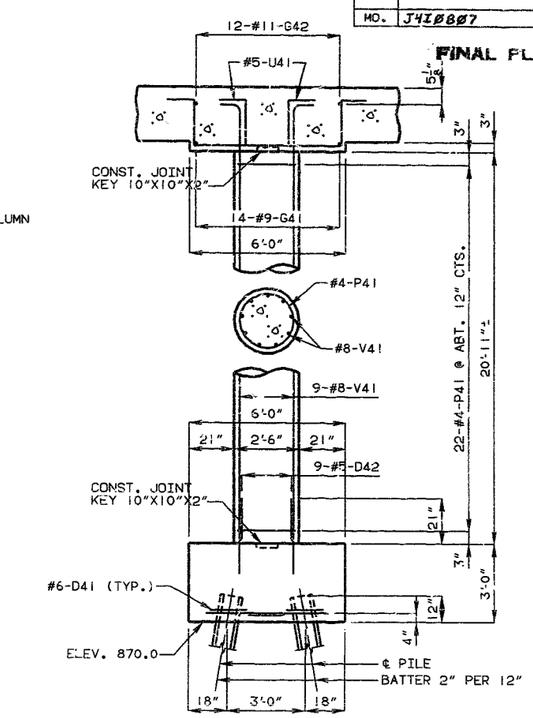

SECTION A-A

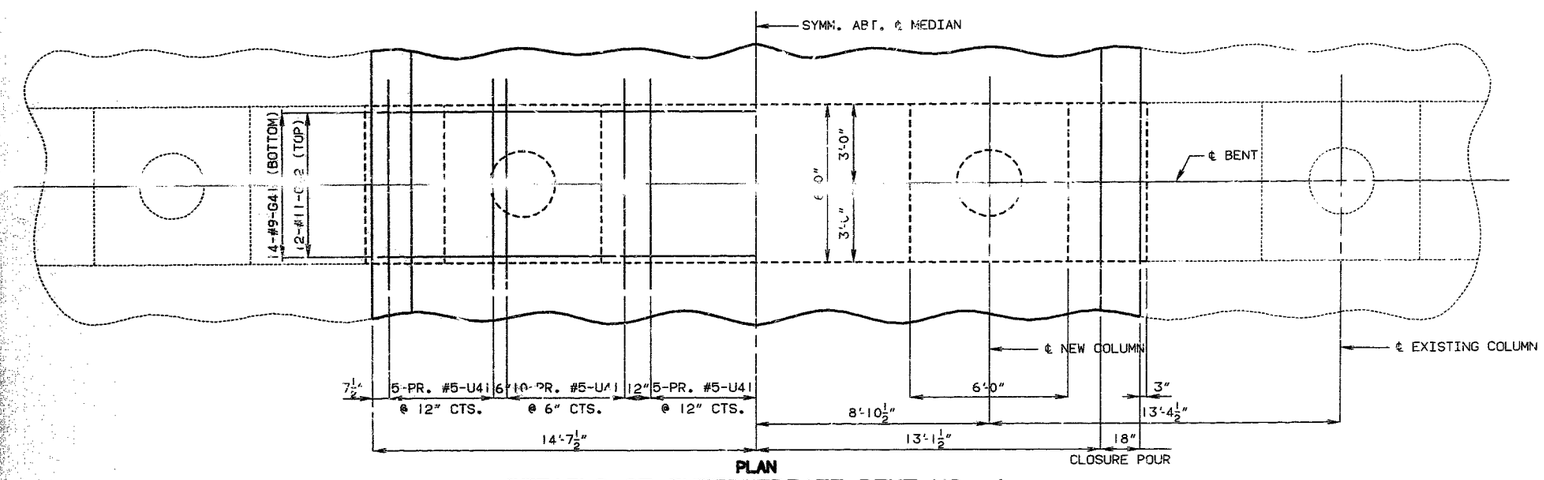

PLAN

DETAILS OF INTERMEDIATE BENT NO. 4

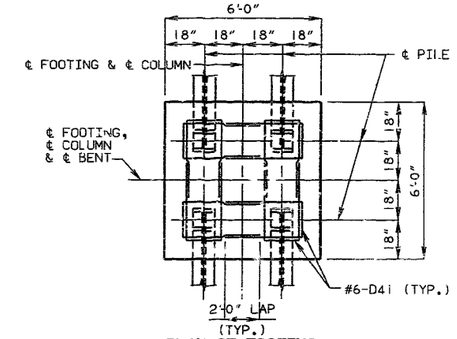

PLAN OF FOOTING
SHOWING REINFORCEMENT

SUBSTRUCTURE QUANTITY TABLE FOR BENT NO. 4

ITEM		QUANTITY
CLASS I EXCAVATION	CU. YD.	40.1
STRUCTURAL STEEL PILES (10")	LIN. FT.	129
CLASS B CONCRETE (SUBSTRUCTURE)	CU. YD.	8.0
REINFORCING STEEL (BRIDGES)	LB.	230

NOTE: WORK THIS TABLE WITH ESTIMATED QUANTITIES AS SHOWN ON SHEET NO. 2.

DETAILED DEC. 1991
CHECKED JAN. 1992

NOTE: THIS DRAWING IS NOT TO SCALE. FOLLOW DIMENSIONS.

JACKSON COUNTY

A-1662R2

173/136

STATE	PROJ. NO.	SHEET NO.
MO.	J4I0807	149

FINAL PLANS

NOTE: SLAB DEPTH VARIES, SEE SHEET NO. 10.

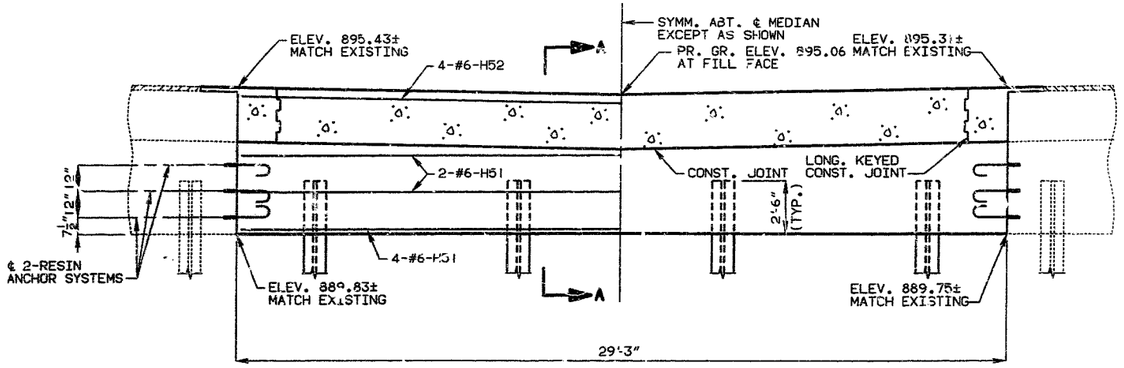

SECTION NEAR END BENT

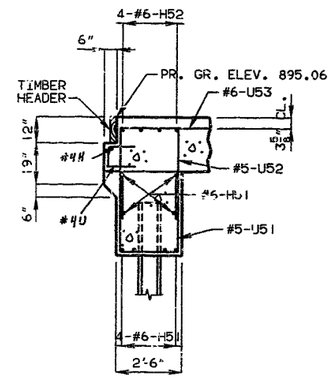

SECTION A-A

NOTE: FOR DETAILS OF TIMBER HEADER, SEE SHEET NO. 11.
FOR DETAIL OF RESIN ANCHOR SYSTEM, SEE SHEET NO. 8.

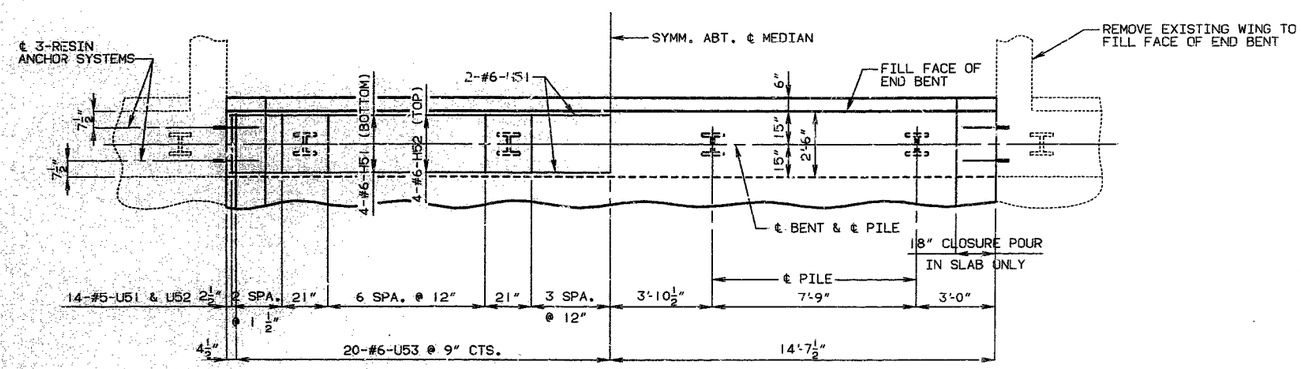

PLAN

DETAILS OF END BENT NO. 5

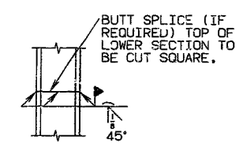

STEEL PILE SPLICE

SUBSTRUCTURE QUANTITY TABLE FOR BENT NO. 5		
ITEM		QUANTITY
CLASS I EXCAVATION	CU. YD.	11.4
STRUCTURAL STEEL PILES (10")	LIN. FT.	146

NOTE: WORK THIS TABLE WITH ESTIMATED QUANTITIES AS SHOWN ON SHEET NO. 2.

DETAILED DEC. 1991
CHECKED JAN. 1992

NOTE: THIS DRAWING IS NOT TO SCALE. FOLLOW DIMENSIONS.

JACKSON COUNTY

A-1662R2

STATE	PROJ. NO.	SHEET NO.
MD.	J4IØBØ7	152

FINAL PLANS

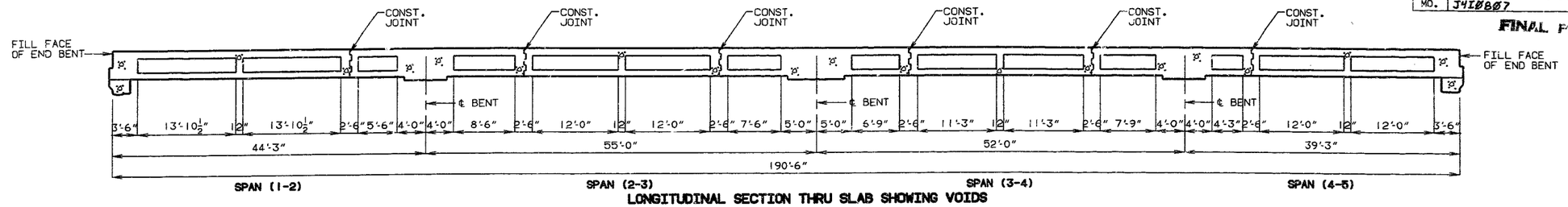

LONGITUDINAL SECTION THRU SLAB SHOWING VOIDS

NOTE: LONGITUDINAL DIMENSIONS ARE HORIZONTAL.

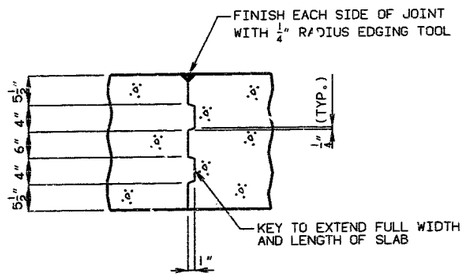

DETAIL OF SLAB CONSTRUCTION JOINT KEY

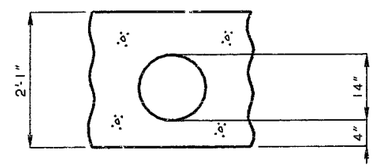

DETAIL OF VOID

NOTE: TUBES FOR PRODUCING VOIDS SHALL HAVE AN OUTSIDE DIAMETER OF 14.0" AND SHALL BE ANCHORED AT NOT MORE THAN 4'-0" CENTERS. FIBER TUBES SHALL HAVE A WALL THICKNESS OF NOT LESS THAN .25".
** USE EXPANSIVE CLASS B2 CONCRETE IN CLOSURE POUR (SEE SPECIAL PROVISIONS). RELEASE FORMS BEFORE CLOSURE POUR IS PLACED.

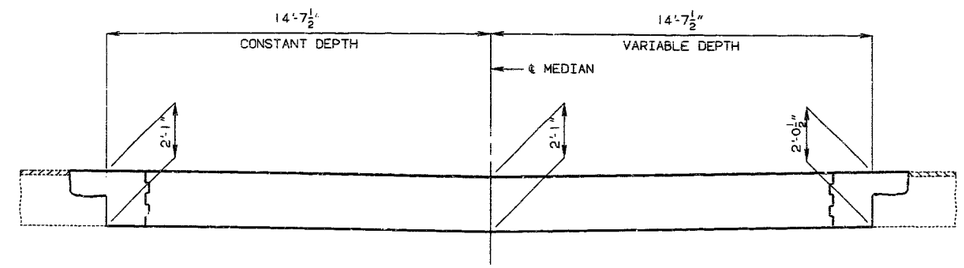

PART SECTION THRU SLAB SHOWING SLAB DEPTH

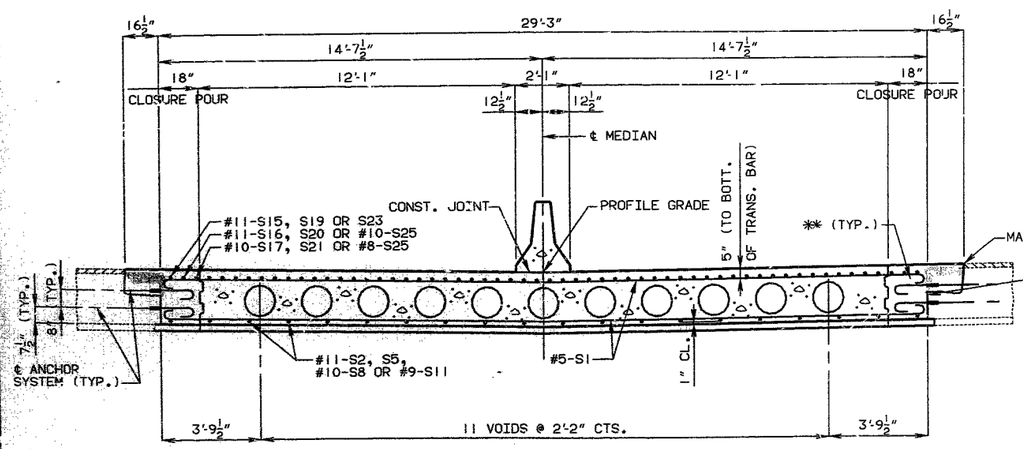

PART SECTION THRU SLAB NEAR INT. BENTS

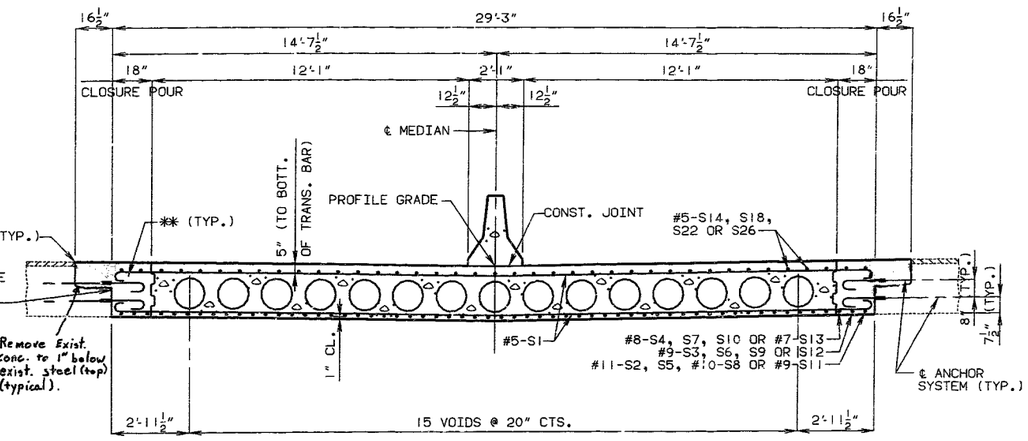

PART SECTION THRU SLAB NEAR CENTER OF SPANS

NOTE: ENTIRE ROADWAY NOT SHOWN FOR CLARITY, SEE SHEET NO. 2.
FOR DETAILS AND REINFORCEMENT OF MEDIAN BARRIER CURB, SEE SHEETS NO. 11 & 12.

DETAILED DEC. 1991
CHECKED DEC. 1991

NOTE: THIS DRAWING IS NOT TO SCALE. FOLLOW DIMENSIONS.

SHEET NO. 10 OF 14.

JACKSON COUNTY

A-1662R2

47136

FINAL PLANS

STATE	PROJ. NO.	SHEET NO.
MO.	J4I0807	155

BILL OF REINFORCING STEEL

NO. REQ'D.	MARK NO. (SIZE MARK)	LOCATION	EPOXY (E)	SHAPE NO.	STIRRUP (S)	SUBSTR. (X)	VARIES (V)	NO. EACH	B FT. IN.	C FT. IN.	D FT. IN.	E FT. IN.	F FT. IN.	H FT. IN.	K FT. IN.	NOMINAL LENGTH FT. IN.	ACTUAL LENGTH FT. IN.	WEIGHT LBS.
		SUBSTRUCTURE																
		INT BT NO 2																
16	6D21	FOOTING		10	S	X				3 2.000	16.000					7 8	7 4	176
18	5D22	FOOTING		20		X			2 9.000							2 9	2 9	52
		INT BT NO 3																
16	6D31	FOOTING		10	S	X				3 2.000	16.000					7 8	7 4	176
18	5D32	FOOTING		20		X			2 9.000							2 9	2 9	52
		INT BT NO 4																
16	6D41	FOOTING		10	S	X				3 2.000	16.000					7 8	7 4	176
18	5D42	FOOTING		20		X			2 9.000							2 9	2 9	52
		SUPERSTRUCT																
		END BT NO 1																
8	6H11	BEAM		20					29 0.000							29 0	29 0	348
6	6H12	SLAB	E	20					29 0.000							29 0	29 0	261
27	5U11	BEAM		10	S					3 0.000	2 3.000					8 3	8 1	228
27	5U12	BEAM	E	10	S					4 0.000	2 3.000					10 3	10 1	284
39	6U13	BEAM	E	19	S				3 0.000	4 1.000						7 1	6 11	405
1	4A	Haunch		20					29 0							29 0	29 0	19
20	4U	Haunch		10						17 5	0 6					4 4		58
		INT BT NO 2																
14	9G21	DROP PANEL	E	18					29 0.000							31 6	31 6	1499
13	11G22	SLAB	E	18					29 0.000							32 2	32 2	2222
48	4P21	COLUMN		16					2 3.000							7 11	7 11	254
78	5U21	SLAB	E	10	S				10.000	22.000	3 10.000	10.000				9 2	8 9	712
18	8V21	COLUMN		19					24 6.000	16.000						22 10	22 8	1089
18	8V	COLUMN		20					10 0							10 0	10 0	481
		INT BT NO 3																
14	9G31	DROP PANEL	E	18					29 0.000							31 6	31 6	1499
13	11G32	SLAB	E	18					29 0.000							32 2	32 2	2222
46	4P31	COLUMN		16					2 3.000							7 11	7 11	243
66	5U31	SLAB	E	10	S				10.000	22.000	5 2.000	10.000				10 6	10 1	694
18	8V21	COLUMN		19					24 0.000	16.000						25 4	25 2	1210

BILL OF REINFORCING STEEL

NO. REQ'D.	MARK NO. (SIZE MARK)	LOCATION	EPOXY (E)	SHAPE NO.	STIRRUP (S)	SUBSTR. (X)	VARIES (V)	NO. EACH	B FT. IN.	C FT. IN.	D FT. IN.	E FT. IN.	F FT. IN.	H FT. IN.	K FT. IN.	NOMINAL LENGTH FT. IN.	ACTUAL LENGTH FT. IN.	WEIGHT LBS.
		INT BT NO 4																
14	9G41	DROP PANEL	E	18					29 0.000							31 6	31 6	1499
12	11G42	SLAB	E	18					29 0.000							32 2	32 2	2051
44	4P41	COLUMN		16					2 3.000							7 11	7 11	233
78	5U41	SLAB	E	10	S				10.000	22.000	3 10.000	10.000				9 2	8 9	712
18	8V31	COLUMN		19					22 9.000	16.000						24 1	23 11	1149
		END BT NO 5																
8	6H51	BEAM		20					29 0.000							29 0	29 0	348
4	6H52	SLAB	E	20					29 0.000							29 0	29 0	174
1	4B	Haunch		20					29 0							29 0	29 0	19
27	5U51	BEAM		10	S					3 0.000	2 3.000					8 3	8 1	228
27	5U52	BEAM	E	10	S					4 0.000	2 3.000					10 3	10 1	284
39	6U53	BEAM	E	19	S				3 0.000	4 1.000						7 1	6 11	405
20	4U	Haunch		10						17 5	0 6					4 4		58
24	5C1	MEDIAN BARR.	E	20					10 0.000							10 0	10 0	292
400	5R1	MEDIAN BARR.	E	27	S					8.000	11.125	7.000	12.000	9.125	6.375	3 2	3 0	1252
400	5R2	MEDIAN BARR.	E	15	S				2 6.125	3.500				2 6.000	3.000	2 10	2 9	1147
7	5R3	MEDIAN BARR.	E	20					34 0.000							34 0	34 0	248
42	5R4	MEDIAN BARR.	E	20					9 9.000							9 9	9 9	427
7	5R5	MEDIAN BARR.	E	20					34 9.000							34 9	34 9	254
7	5R6	MEDIAN BARR.	E	20					31 9.000							31 9	31 9	232
7	5R7	MEDIAN BARR.	E	20					29 0.000							29 0	29 0	212
442	5S1	SLAB	E	18					29 0.000							30 2	30 2	13907
20	11S2	SLAB	E	20					47 5.000							47 5	47 5	5038
19	9S3	SLAB	E	20					32 5.000							32 5	32 5	2094
19	8S4	SLAB	E	20					21 3.000							21 3	21 3	1078
60	11S5	SLAB	E	20					24 10.000							24 10	24 10	7916
19	9S6	SLAB	E	20					32 6.000							32 6	32 6	2100
19	8S7	SLAB	E	20					20 6.000							20 6	20 6	1040
20	10S8	SLAB	E	20					56 11.000							56 11	56 11	4898
21	9S9	SLAB	E	20					30 0.000							30 0	30 0	2142
21	8S10	SLAB	E	20					19 6.000							19 6	19 6	1093
20	9S11	SLAB	E	20					41 4.000							41 4	41 4	2811
19	9S12	SLAB	E	20					30 5.000							30 5	30 5	1965
21	7S13	SLAB	E	20					19 0.000							19 0	19 0	816
39	5S14	SLAB	E	20					31 10.000							31 10	31 10	1295
20	11S15	SLAB	E	20					30 6.000							30 6	30 6	3241
19	11S16	SLAB	E	20					20 0.000							20 0	20 0	2019
19	10S17	SLAB	E	20					10 0.000							10 0	10 0	818
39	5S18	SLAB	E	20					28 4.000							28 4	28 4	1153
20	11S19	SLAB	E	20					31 2.000							31 2	31 2	3312
21	11S20	SLAB	E	20					19 6.000							19 6	19 6	2176
21	1.S21	SLAB	E	20					10 9.000							10 9	10 9	971
39	5S22	SLAB	E	20					27 11.000							27 11	27 11	1136
20	11S23	SLAB	E	20					27 5.000							27 5	27 5	2913
19	10S24	SLAB	E	20					15 6.000							15 6	15 6	1267
19	8S25	SLAB	E	20					8 3.000							8 3	8 3	419
41	5S26	SLAB	E	20					27 8.000							27 8	27 8	1183

Two additional H12, S9, S10, S13, S20, S21 & S26 are included in the Bar Bill for testing.

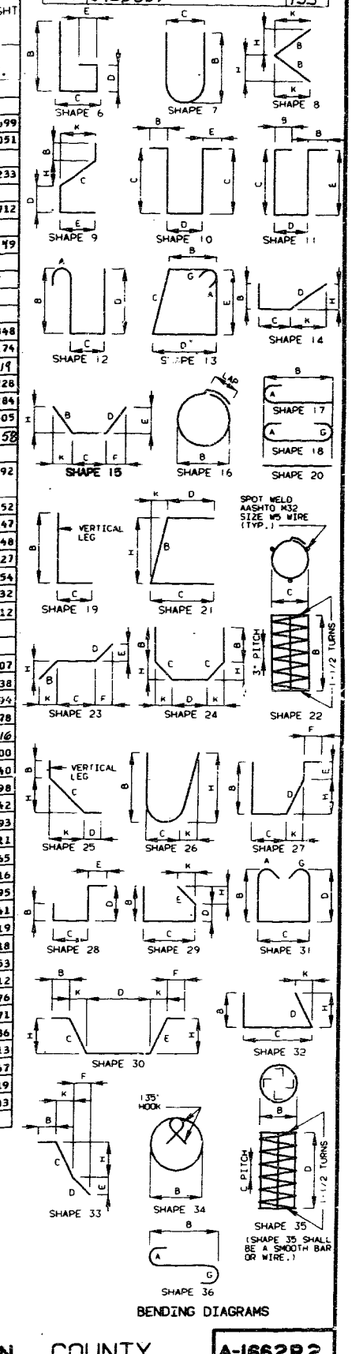

BENDING DIAGRAMS

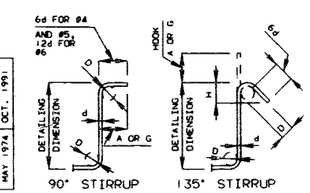

STD 90.8	REVISED
MAY 1974	OCT. 1991

DETAILED JAN. 1992
CHECKED JAN. 1992

STIRRUP HOOK DIMENSIONS				
GRADES 40 - 50 - 60 KSI				
BAR SIZE	D (IN.)	90° HOOK	135° HOOK	
		HOOK A OR G	HOOK A OR G	APPROX. H
#4	2"	4-1/2"	4-1/2"	3"
#5	2-1/2"	6"	5-1/2"	3-3/4"
#6	4-1/2"	12"	8"	4-1/2"

NOTE: UNLESS OTHERWISE NOTED DIAMETER "D" IS THE SAME FOR ALL BENDS AND HOOKS ON A BAR.

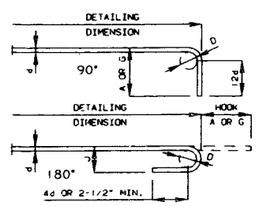

NOTE: THIS DRAWING IS NOT TO SCALE. FOLLOW DIMENSIONS.

END HOOK DIMENSIONS				
BAR SIZE	D (IN.)	ALL GRADES		
		180 HOOKS		90 HOOKS
		A OR G	J	A OR G
#3	2-1/4"	5"	3"	6"
#4	3"	6"	4"	8"
#5	3-3/4"	7"	5"	10"
#6	4-1/2"	8"	6"	12"
#7	5-1/4"	10"	7"	14"
#8	6"	11"	8"	16"
#9	9-1/2"	15"	11-3/4"	19"
#10	10-3/4"	17"	13-1/4"	22"
#11	12"	19"	14-3/4"	2'-0"
#14	18-1/4"	2'-3"	21-3/4"	2'-7"

NOTE:
ALL STANDARD HOOKS AND BENDS OTHER THAN 180 DEG. TO BE BENT WITH THE SAME PROCEDURE AS FOR 90 DEG. STD. HOOKS.
HOOKS AND BENDS SHALL BE IN ACCORDANCE WITH THE PROCEDURES AS SHOWN ON THIS SHEET.
E = EPOXY COATED REINFORCEMENT.
S = STIRRUP.
X = BAR IS INCLUDED IN SUBSTRUCTURE QUANTITIES.
V = BAR DIMENSIONS VARY IN EQUAL INCREMENTS BETWEEN DIMENSIONS SHOWN ON THIS LINE AND THE FOLLOWING LINE.
NO. EA. = NUMBER OF BARS OF EACH LENGTH.
NOMINAL LENGTHS ARE BASED ON OUT TO OUT DIMENSIONS SHOWN IN BENDING DIAGRAMS AND ARE LISTED FOR FABRICATORS USE. (NEAREST INCH)
ACTUAL LENGTHS ARE MEASURED ALONG CENTERLINE BAR TO THE NEAREST INCH.
PAYWEIGHTS ARE BASED ON ACTUAL LENGTHS.
FOUR ANGLE OR CHANNEL SPACERS ARE REQUIRED FOR EACH COLUMN SPIRAL. SPACERS ARE TO BE PLACED ON INSIDE OF SPIRALS. LENGTH AND WEIGHT OF COLUMN SPIRALS DO NOT INCLUDE SPLICES OR SPACERS.
REINFORCING STEEL (GRADE 60) = FY 60,000 PSI.

SHEET NO. 13 OF 14

JACKSON COUNTY

A-1662R2

188 137

STATE	PROJ. NO.	SHEET NO.
MO.	J4I0807	156

FINAL PLANS

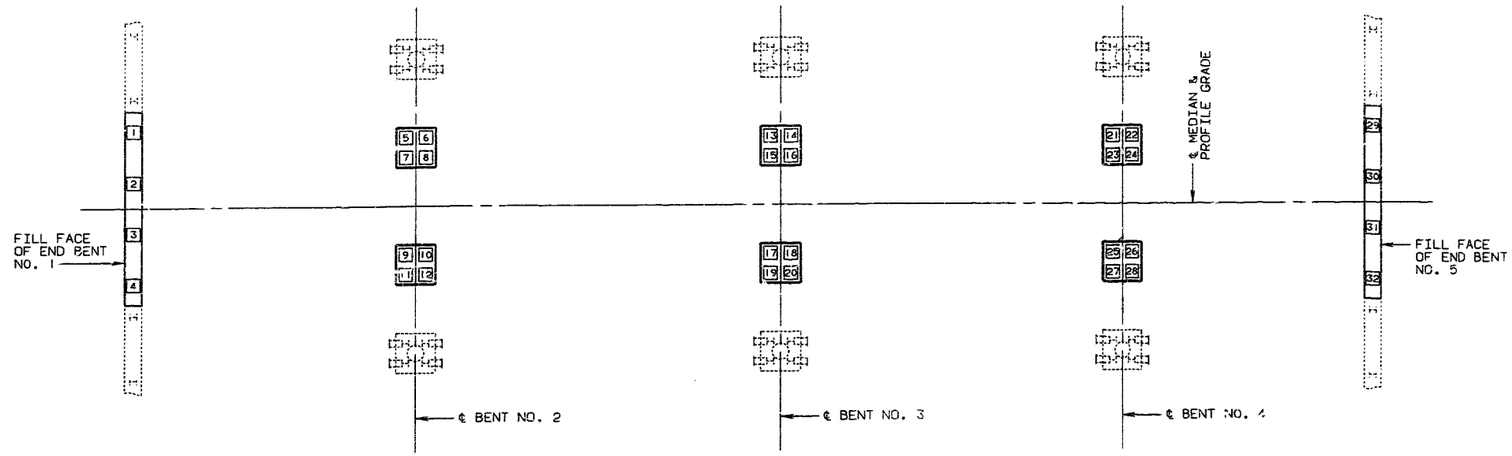

PART PLAN SHOWING PILE NUMBERING FOR RECORDING "AS BUILT" PILE DATA

"AS BUILT" PILE DATA

PILE NO.	LENGTH IN PLACE (FT.)	COMPUTED BEARING (TONS)	Splice (Ft.)	REMARKS		
				END BENT NO. 1		
1	30'	147.5'	–	All pile driven to practical refusal		HP 10x42
2	30'	107.3'	–	"	"	"
3	31'	112.2'	–	"	"	"
4	30'	78.7'	–	"	"	"
Subtotal	121'		0'			
				INTERMEDIATE BENT NO. 2		
5	6'	225.8'	–	All pile driven to practical refusal		HP 10x42
6	13'	112.9'	–	"	"	"
7	16'	102.6'	6'	"	"	"
8	14'	114.7'	–	"	"	"
9	6'	188.2'	–	"	"	"
10	19'	102.6'	8'	"	"	"
11	6'	225.8'	–	"	"	"
12	7'	188.2'	–	"	"	"
Subtotal	87'		16'			
				INTERMEDIATE BENT NO. 3		
13	14'	141.1'	–	All pile driven to practical refusal		HP 10x42
14	14'	173.7'	–	"	"	"
15	15'	173.7'	–	"	"	"
16	14'	173.7'	–	"	"	"
17	15'	161.3'	–	"	"	"
18	16'	161.3'	–	"	"	"
19	15'	141.1'	–	"	"	"
20	15'	141.1'	–	"	"	"
Subtotal	118'		0'			

"AS BUILT" PILE DATA

PILE NO.	LENGTH IN PLACE (FT.)	COMPUTED BEARING (TONS)	Splice (Ft.)	REMARKS		
				INTERMEDIATE BENT NO. 4		
21	15'	141.1'	–	All pile driven to practical refusal		HP 10x42
22	18'	141.1'	–	"	"	"
23	15'	161.3'	–	"	"	"
24	16'	141.1'	–	"	"	"
25	14'	188.2'	–	"	"	"
26	20'	102.6'	–	"	"	"
27	17'	141.1'	–	"	"	"
28	16'	141.1'	–	"	"	"
Subtotal	129'		0'			
				END BENT NO. 5		
29	37'	147.5'	–	All pile driven to practical refusal		HP 10x42
30	37'	147.5'	–	"	"	"
31	36'	131.1'	–	"	"	"
32	36'	118.0'	–	"	"	"
Subtotal	146'		0'			

Total 617'

NOTE: INDICATE IN REMARK COLUMN:
A.) IF PILING WERE DRIVEN TO PRACTICAL REFUSAL.
B.) PILE BATTER IF OTHER THAN SHOWN ON BENT DETAIL SHEET.
C.) TYPE OF PILING USED.

~~NOTE: THIS SHEET TO BE COMPLETED BY MHTD CONSTRUCTION PERSONNEL.~~

DETAILED SEPT. 1992
CHECKED SEPT. 1992

NOTE: THIS DRAWING IS NOT TO SCALE. FOLLOW DIMENSIONS.

JACKSON COUNTY

A-1662R2