MISSOURI STATE HIGHWAY DEPARTMENT

FED. ROAD DIST. NO.	STATE	FED. AID PROJ. NO.	FISCAL YEAR	SHEET NO.	TOTAL SHEETS
5	MO.		19	115	

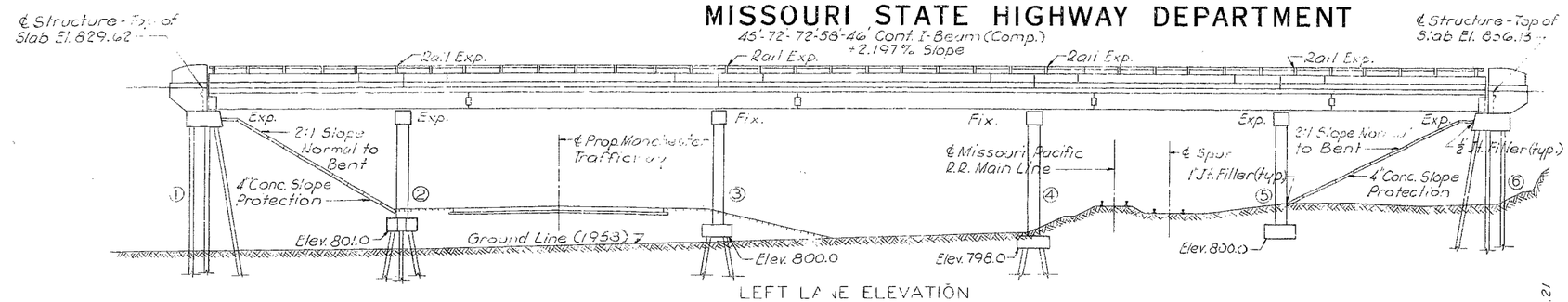

LEFT LANE ELEVATION

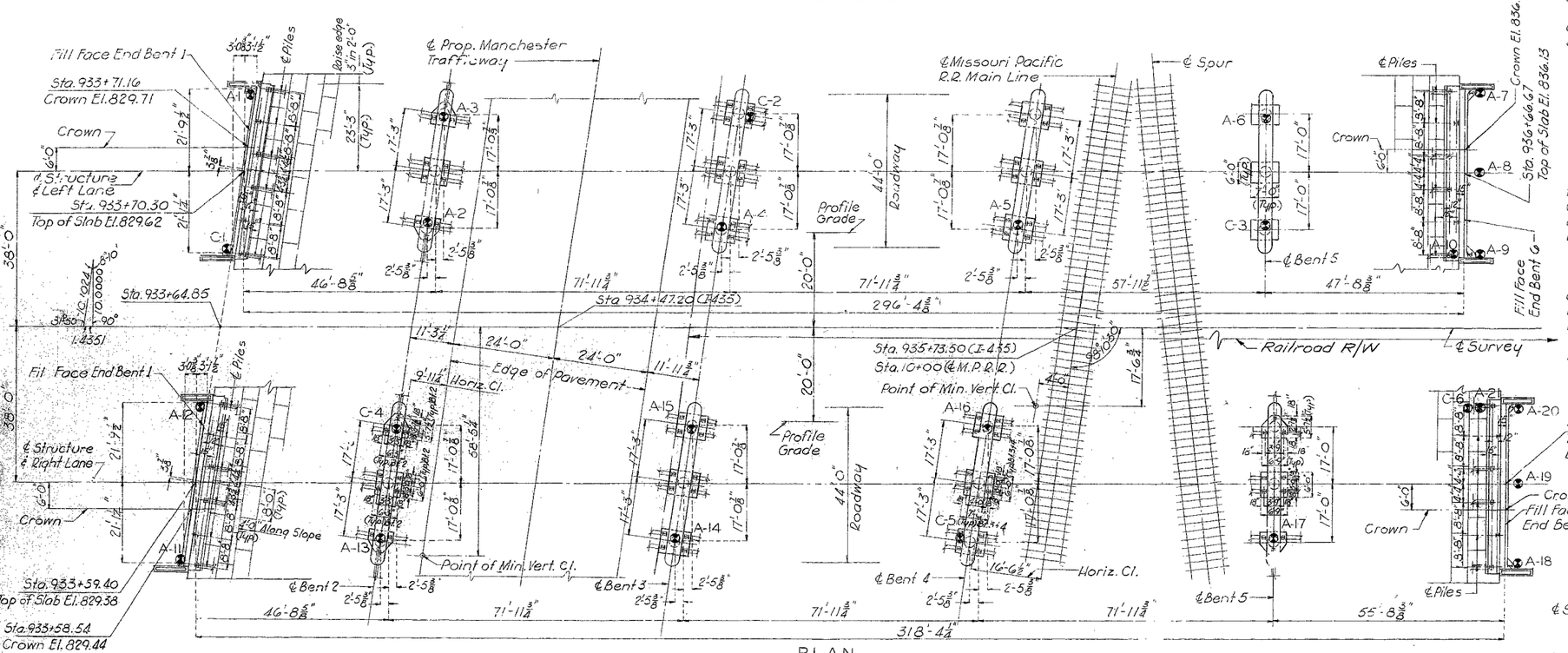

PLAN

● - Indicates location of boring
For Boring Data see sht. 2 of 16.

GENERAL NOTES:

Design Specifications: A.A.S.H.O.-1961
Design Loadings: HS 20-44
15 #/sq. ft. Future Wearing Surface
Modified 24000# Tandem Axle
Earth 120 # Equivalent Fluid Pressure 30#
Design Unit Stresses: Class B Concrete (Substructure) fc = 1200 p.s.i.
Class B1 Concrete (Superstructure) fc = 1600 p.s.i.
Reinforcing Steel fs = 20,000 p.s.i.
Structural Steel (A.S.T.M. A36-62T) fs = 20,000 p.s.i.
Steel Pile (A.S.T.M. A36-62T) fb = 9000 p.s.i.
Superstructure deck to be surface sealed.
Paint; shop, none; field, three coats.

Field Connections, High Strength Bolts $\frac{3}{4}$" ϕ, holes $\frac{13}{16}$" ϕ except as noted.

A min. vert. clearance of 21'-6" from top of rails and a min. lateral clearance of 12'-6" from ℄ of tracks shall be maintained during construction.

Notes: Compacted roadway fill for Manchester Road between the limits of State R/W shall be placed before any excavation or driving of steel H piles for bents 2 & 3.

Concrete protection on front slopes at End Bents to be included under road contracts. Provide 1" Filler (Standard Specification 157.1.7) between slope protection and Intermediate Bents; & ½" Filler (Standard Spec. 157.1.7) between slope protection and End Bents.

Compacted roadway fill (full roadway width) shall be placed up to elevation of bottom of concrete beam in front of and not less than 25'-0" in back of End Bents before piles are driven for these bents.

Steel Piles authorized in lengths greater than 65' may be furnished in two pieces for field splicing.

B.M. #98 - Spike in P.P. 240' Rt. Sta. 926+08 Elev. 784.96
B.M. #99 - Spike in P.P. 240' Rt. Sta. 936+80 Elev. 807.82

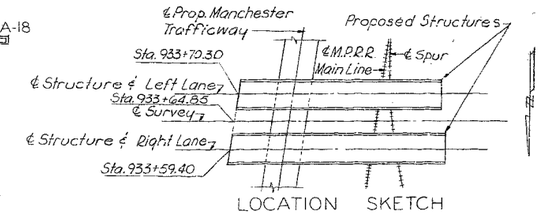

LOCATION SKETCH

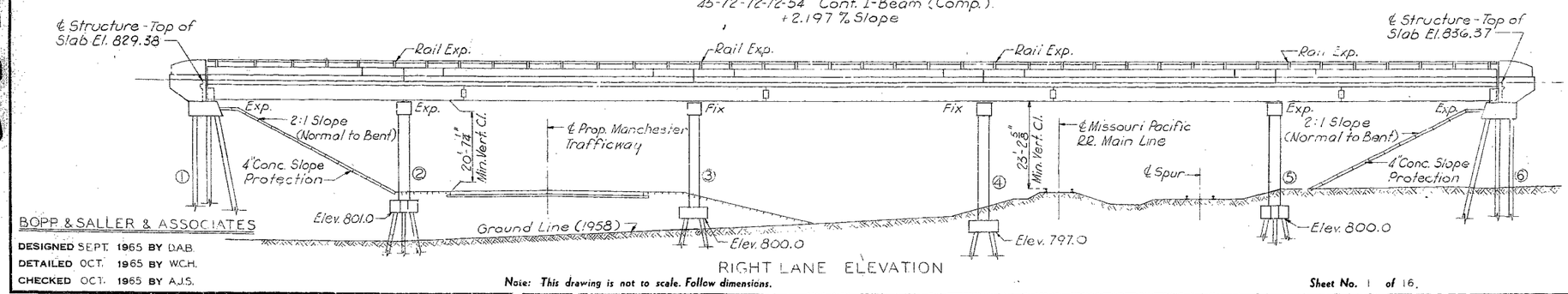

RIGHT LANE ELEVATION

BRIDGE OVER MISSOURI PACIFIC RAILROAD

STATE ROAD - INTERSTATE ROUTE 435

ABOUT 4.5 MILES NORTH OF MARTIN CITY

PROJECT NO. I-IG-435-1(53) RTE I-435) **STA.** 933+70.30 (LEFT LANE) 933+59.40 (RIGHT LANE)

JACKSON **COUNTY**

BOPP & SALLER & ASSOCIATES

DESIGNED SEPT. 1965 **BY** DAB.
DETAILED OCT. 1965 **BY** WCH.
CHECKED OCT. 1965 **BY** AJS.

SUBMITTED BY D. B. Jenkins BRIDGE ENGINEER DATE 5/20/66
APPROVED BY M. G. Snider CHIEF ENGINEER DATE 5/20/66

STD. 54.00
A-1427

Note: *This drawing is not to scale. Follow dimensions.*

Sheet No. 1 **of** 16.

285

MISSOURI STATE HIGHWAY DEPARTMENT

FED. ROAD DIST. NO.	STATE	FED. AID PROJ. NO.	FISCAL YEAR	SHEET NO.	TOTAL SHEETS
5	MO.		19	116	

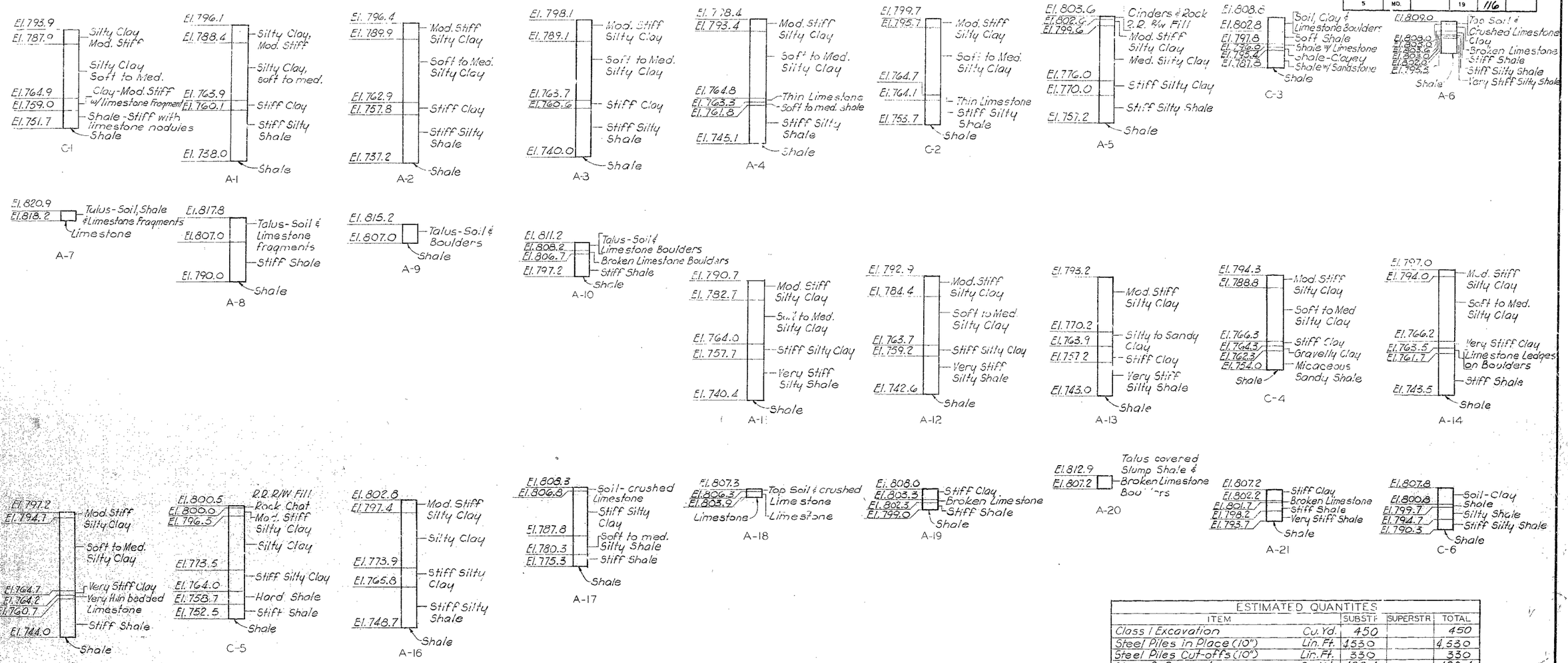

ESTIMATED QUANTITES				
ITEM		SUBSTR.	SUPERSTR.	TOTAL
Class I Excavation	Cu. Yd.	450		450
Steel Piles in Place (10")	Lin. Ft.	4530		4,530
Steel Piles Cut-offs (10")	Lin. Ft.	330		330
Class B Concrete	Cu. Yd.	428.4		428.4
Class B1 Concrete	Cu. Yd.		800.1	800.1
Reinforcing Steel	Lbs.	68,350	226,800	295,150
Painting	Tons		279.5	279.5
Bridge Rail (Single Tube Type)	Lin. Ft.		1,220	1,220
Fab. Struct. Carbon Steel	Lbs.		564,690	564,690

Note: Concrete in End Post, Parapets & Curbs is included with superstructure Concrete.
No payment for excavation will be allowed at End Bents 1 & 6. Excavation for Bents No 2 & 3 will be paid for from the finished ground line.

FOOTING AND PILE DATA

	BENT NO.	1LT.L.	2LT.L.	3LT.L.	4LT.L.	5LT.L.	6LT.L.	1RT.L.	2RT.L.	3RT.L.	4RT.L.	5RT.L.	6RT.L.
SPREAD FOOTING	Foundation Material					Shale							
	Design Brg. Tons/sq.ft.					5.0							
BEARING PILE	Pile Type & Size	10BP42	10BP42	10BP42	10BP42		10BP42	10BP42	[illegible]	10BP42	10BP42	[illegible]	[illegible]
	Number	8	10	12	12		8	8	10	12	12	10	8
	Approx. Length Ft.	70	50	45	35		35	70	50	45	40	20	35
	Design Bearing Ton	28.0	48.5	46.5	45.9		30.0	28.0	48.5	46.5	45.9	55.0	31.0
	Hammer Energy Req'd* Ft. Lb.	8,800	10900	10,500	10,300		7000	8,800	10,900	10,500	10,300	12,400	7000

Notes: * Minimum energy requirement of hammer based on plan length and design bearing value of piles.
All pile shall be driven to practical refusal at 1.9 times the design bearing value.

LOG OF SOUNDINGS

C = CORE
A = AUGER

BRIDGE OVER MISSOURI PACIFIC RAILROAD

STATE ROAD - INTERSTATE ROUTE 435

ABOUT 4.5 MILES NORTH OF MARTIN CITY

PROJECT NO. I-IG-435-1(53)(RTE.I-435) **STA.** 933+70.30 (LEFT LANE) 933+59.40 (RIGHT LANE)

JACKSON **COUNTY**

BOPP & SALLER & ASSOCIATES

DETAILED OCT. 1965 BY W.C.H.

CHECKED OCT. 1965 BY A.J.S.

Note: This drawing is not to scale. Follow dimensions.

Sheet No. 2 of 16

A-1427

286

MISSOURI STATE HIGHWAY DEPARTMENT

FED. ROAD DIST. NO.	STATE	FED. AID PROJ. NO.	FISCAL YEAR	SHEET NO.	TOTAL SHEETS
5	MO.		19	117	

COMPLETE BILL OF REINFORCING STEEL

NO.	SIZE	LENGTH	MARK	LOCATION
End Bents No. 1				
8	#6	6'-3"	F1	Fillets
8	#6	7'-0"	F2	"
16	#8	25'-9"	H1	Beam
8	#6	24'-0"	H2	"
16	#4	23'-9"	H3	Backwall
8	#6	24'-0"	H4	"
8	#4	7'-0"	H5	Wings
8	#6	9'-9"	H6	"
4	#8	22'-3"	H7	Beam Lt. La.
4	#8	29'-3"	H8	" " "
4	#8	21'-3"	H9	Beam Rt. La.
4	#8	30'-3"	H10	" " "
8	#6	8'-9"	H34	Wing
8	#6	6'-3"	H35	"
8	#6	11'-0"	T1	"
8	#6	7'-9"	T2	"
34	#4	12'-3"	U12	Beam
25	#4	12'-9"	U13	" Lt. La.
32	#4	3'-6"	U14	"
25	#4	12'-3"	U15	" Rt. La.
180	#5	5'-9"	V7	Backwall
20	#4	6'-3"	V8	Wings
32	#4	5'-3"	V9	"
8	#4	4'-3"	V10	"
24	#2	19'-9"	W1	A.B. Wells
Int. Bents No. 2				
54	#8	4'-0"	D1	Ftg.
40	#6	9'-3"	F4	Ftg.
32	#8	22'-9"	H15	Beam
8	#10	24'-0"	H16	"
8	#11	24'-0"	H17	"
8	#9	11'-9"	H18	"
8	#10	12'-0"	H19	"
8	#9	15'-0"	H20	"
8	#10	15'-3"	H21	"
8	#6	21'-6"	H22	"
16	#7	6'-3"	H23	"
92	#4	10'-0"	U1	Bm. Rt. L.
13	#5	11'-6"	U2	" " "
38	#5	11'-6"	U3	Beam
92	#4	10'-0"	U4	Bm. Lt. L.
13	#5	12'-0"	U5	" " "
120	#3	3'-0"	P1	Column
54	#8	21'-9"	V1	Column
24	#2	19'-9"	W1	A.B. Wells
Int. Bents No. 3				
54	#8	4'-0"	D1	Ftg.
24	#6	10'-0"	F3	"
24	#6	9'-3"	F4	"
16	#8	22'-9"	H15	Beam
16	#11	24'-0"	H17	"
16	#10	12'-0"	H19	"
16	#10	15'-3"	H21	"
8	#6	21'-6"	H22	"
16	#7	6'-3"	H23	"
16	#9	23'-0"	H24	"
76	#4	9'-6"	U6	"
92	#5	10'-0"	U7	Bm. Lt. L.
26	#4	10'-0"	U8	" " "
26	#4	9'-6"	U9	Bm. Rt. L.
92	#5	10'-0"	U10	" " "
Int. Bents No. 3 Cont.				
138	#3	8'-0"	P1	Column
54	#8	24'-6"	V2	Column
24	#2	19'-9"	W1	A.B. Wells
Int. Bents No. 4				
54	#8	4'-0"	D1	Ftg.
24	#6	10'-0	F3	"
24	#6	9'-3"	F4	"
16	#8	22'-9"	H15	Beam
8	#10	24'-0"	H16	"
8	#11	24'-0"	H17	"
16	#10	12'-0"	H19	"
16	#10	15'-3"	H21	"
8	#6	21'-6"	H22	"
16	#7	6'-3"	H23	"
16	#9	23'-0"	H24	"
76	#4	9'-6"	U6	Beam
92	#5	10'-0"	U7	"
26	#4	10'-0"	U8	"
26	#4	9'-6"	U9	"
92	#5	10'-0"	U10	"
159	#3	8'-0"	P1	Column
27	#8	28'-3"	V3	Col. Lt. L.
27	#8	29'-3"	V4	" Rt. L.
24	#2	19'-9"	W1	A.B. Wells
Int. Bent No. 5 Lt. Lane				
27	#8	4'-0"	D1	Ftg.
Superstructure				
27	#6	8'-9"	F5	Ftg.
27	#5	7'-9"	F6	"
8	#7	6'-3"	H23	Beam
8	#8	22'-9"	H25	"
4	#11	23'-9"	H26	"
4	#10	23'-9"	H27	"
4	#9	15'-0"	H28	"
4	#10	15'-3"	H29	"
4	#9	11'-9"	H30	"
4	#10	12'-0"	H31	"
4	#6	21'-3"	H32	"
38	#4	9'-0"	U17	Beam
90	#5	9'-6"	U18	"
24	#4	9'-3"	U19	"
75	#3	8'-0"	P1	Column
27	#8	27'-3"	V5	Column
12	#2	19'-9"	W1	A.B. Wells
Int. Bent No. 5 Rt. Lane				
27	#8	4'-0"	D1	Ftg.
8	#6	10'-0"	F3	Ftg.
12	#6	9'-3"	F4	"
76	#4	9'-6"	U6	Beam
92	#5	10'-0"	U7	"
26	#4	10'-0"	U8	"
26	#4	9'-6"	U9	"
92	#5	10'-0"	U10	"
159	#3	8'-0"	P1	Column
27	#8	28'-3"	V3	Col. Lt. L.
27	#8	29'-3"	V4	" Rt. L.
24	#2	19'-9"	W1	A.B. Wells
Int. Bent No. 5 Lt. Lane				
27	#8	4'-0"	D1	Ftg.
Superstructure				
27	#6	8'-9"	F5	Ftg.
27	#5	7'-9"	F6	"
8	#7	6'-3"	H23	Beam
8	#8	22'-9"	H25	"
4	#11	23'-9"	H26	"
4	#10	23'-9"	H27	"
4	#9	15'-0"	H28	"
4	#10	15'-3"	H29	"
4	#9	11'-9"	H30	"
4	#10	12'-0"	H31	"
4	#6	21'-3"	H32	"
38	#4	9'-0"	U17	Beam
90	#5	9'-6"	U18	"
24	#4	9'-3"	U19	"
75	#3	8'-0"	P1	Column
27	#8	27'-3"	V5	Column
12	#2	19'-9"	W1	A.B. Wells
End Bents No. 6				
24	#2	19'-9"	W1	A.B. Wells
16	#6	6'-9"	F7	Fillets
8	#6	24'-0"	H2	Beam
16	#4	23'-9"	H3	Beam
8	#4	7'-0"	H5	Wings
8	#6	9'-9"	H6	"
8	#8	29'-9"	H11	Beam
8	#8	21'-3"	H12	"
16	#8	25'-6"	H13	"
8	#6	24'-0"	H14	Backwall
8	#6	7'-9"	T2	Wings
8	#6	12'-3"	T3	"
8	#6	8'-9"	H34	Wing
36	#4	12'-3"	U12	Beam
28	#4	3'-6"	U14	"
52	#4	12'-6"	U16	"
8	#6	6'-3"	H35	Wing
176	#5	5'-9"	V7	Backwall
32	#4	6'-3"	V11	Wings
20	#4	6'-9"	V12	"
8	#4	4'-9"	V13	"
Superstructure				
1234	#5	4'-0"	C1	Curb
16	#5	23'-3"	C2	"
32	#5	36'-6"	C3	"
4	#5	28'-0"	C4	"
8	#5	23'-9"	C5	"
4	#5	31'-3"	C6	"
4	#5	35'-0"	C7	"
4	#5	38'-3"	C8	"
8	#5	27'-9"	C9	"
16	#6	9'-9"	C10	End Post
80	#5	3'-3"	C11	"
48	#5	9'-3"	R1	"
8	#5	5'-6"	R2	"
8	#5	6'-3"	R3	"
8	#5	6'-9"	R4	"
8	#5	7'-0"	R5	"
48	#5	7'-3"	R6	"
1234	#5	5'-3"	R7	Parapet
16	#5	55'-0"	R8	"
128	#5	9'-9"	R9	"
64	#5	26'-6"	R10	"
8	#5	21'-3"	R11	" Lt. L.
8	#5	36'-3"	R12	" Lt. L.
4	#5	34'-6"	R13	" Lt. L.
8	#5	28'-3"	R14	" Rt. L.
16	#5	22'-9"	R15	" Rt. L.
8	#5	25'-0"	R16	" Rt. L.
5788	#5	23'-9"	S1	Slab
30	#5	46'-9"	S2	"
423	#4	31'-0"	S3	" Lt. L.
368	#4	16'-0"	S4	"
47	#4	47'-9"	S5	"
392	#5	40'-0"	S6	" Lt. L.
6	#5	26'-0"	S7	"
20	#5	25'-6"	S8	"
20	#5	24'-3"	S9	Slab
20	#5	23'-0"	S10	"
20	#5	22'-0"	S11	"
20	#5	20'-9"	S12	"
6	#5	19'-6"	S13	"
470	#4	30'-3"	S14	" Rt. L.
448	#5	38'-0"	S15	" Rt. L.

BENDING SKETCHES & CUTTING DIAGRAMS

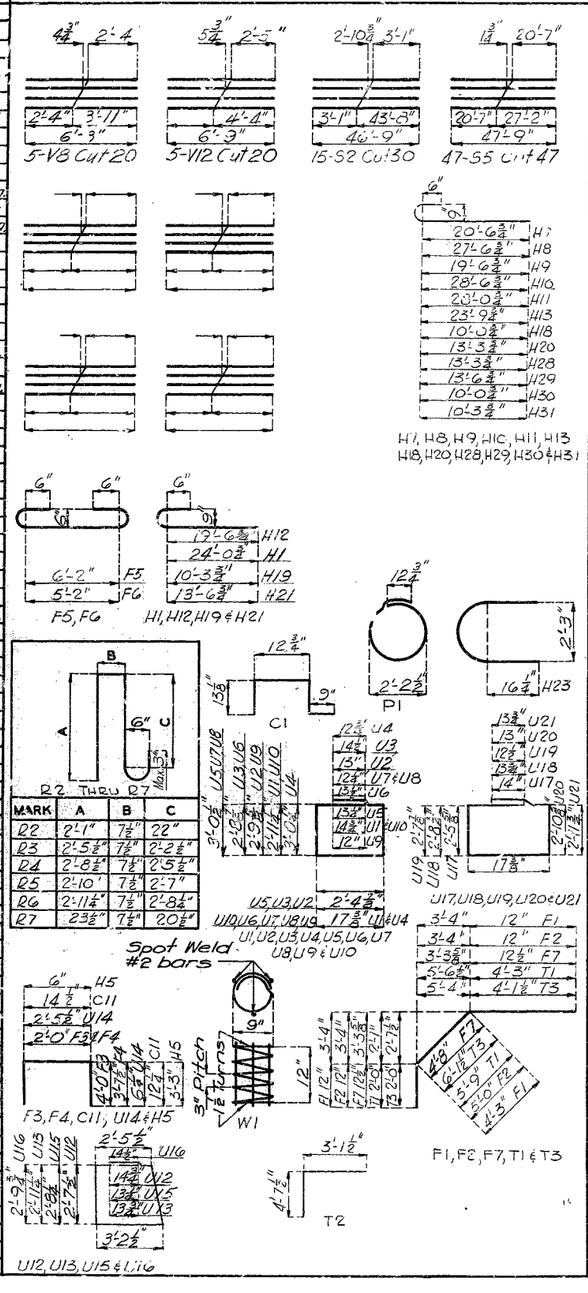

BOPP & SALLER & ASSOCIATES

DETAILED OCT. 1965 BY D.A.B.

CHECKED OCT. 1965 BY A.J.S.

Note: This drawing is not to scale. Follow dimensions.

Sheet No. 3 of 16.

BRIDGE OVER MISSOURI PACIFIC RAILROAD

STATE ROAD - INTERSTATE ROUTE 435

ABOUT 4.5 MILES NORTH OF KANSAS CITY

PROJECT NO. IHG-435-1(53)(RTE. I-435) STA. 333+70.30 (LEFT LANE) 333+59.40 (RIGHT LANE)

JACKSON COUNTY

A-1427

No.	Date	Revised
90.3	June 1961	Dec. 1964

287

MISSOURI STATE HIGHWAY DEPARTMENT

FED ROAD DIST. NO.	STATE	FED AID PROJ. NO.	FISCAL YEAR	SHEET NO.	TOTAL SHEETS
5	MO.		19	118	

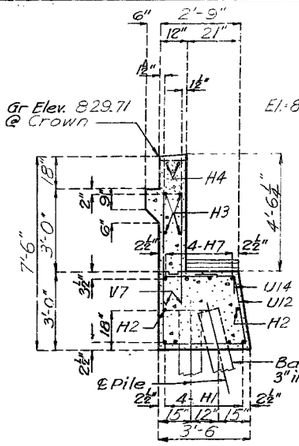

SECTION D-D

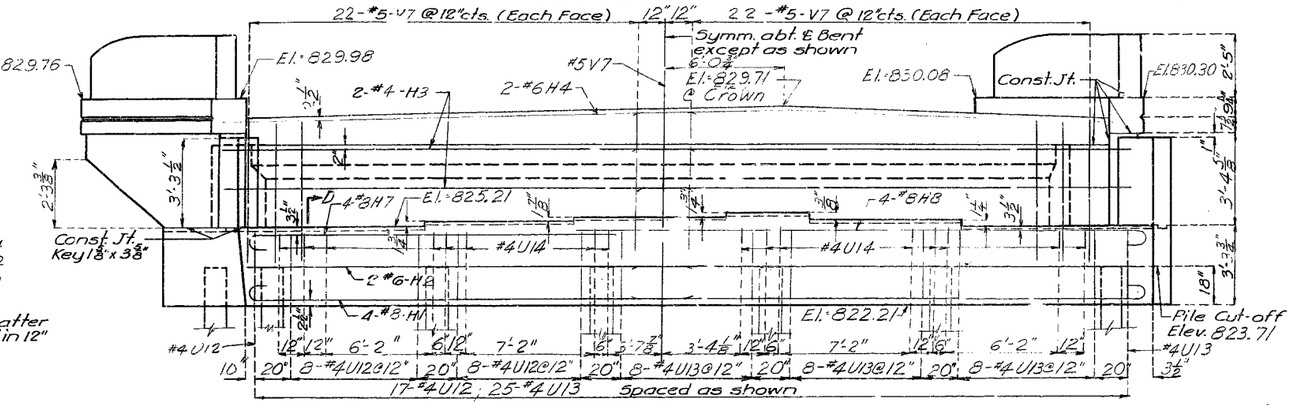

ELEVATION

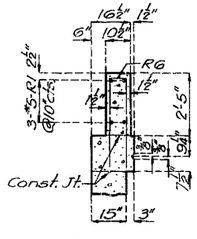

PART SECTION A-A

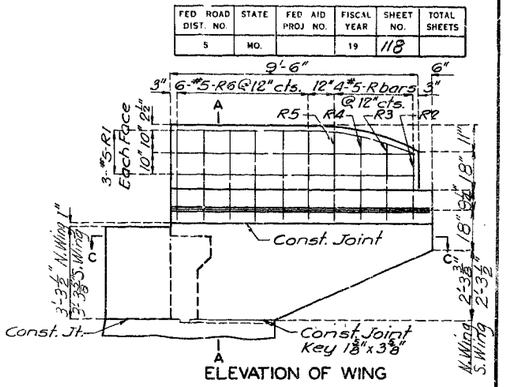

ELEVATION OF WING

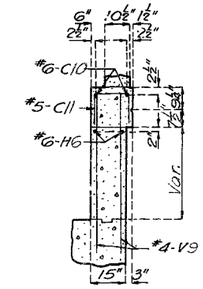

SECTION B-B

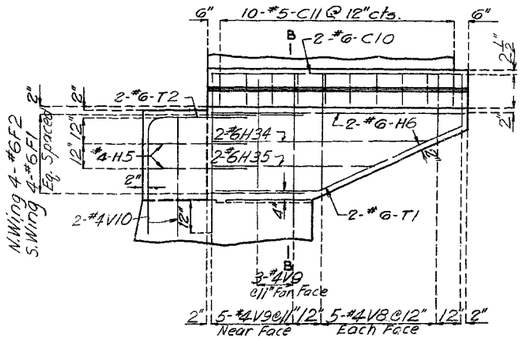

PART ELEVATION OF WING

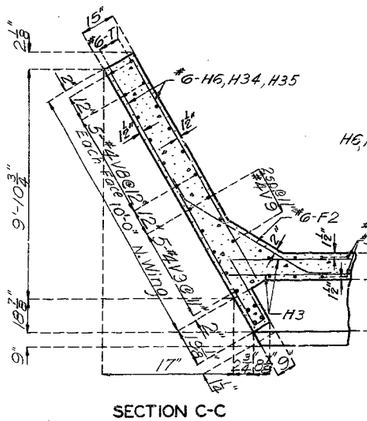

SECTION C-C

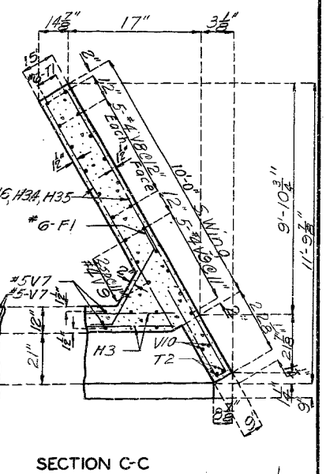

SECTION C-C

Note: For Const. Joint Detail See sht. 5 of 16. For Details of Timber Header See sht. 7 of 16

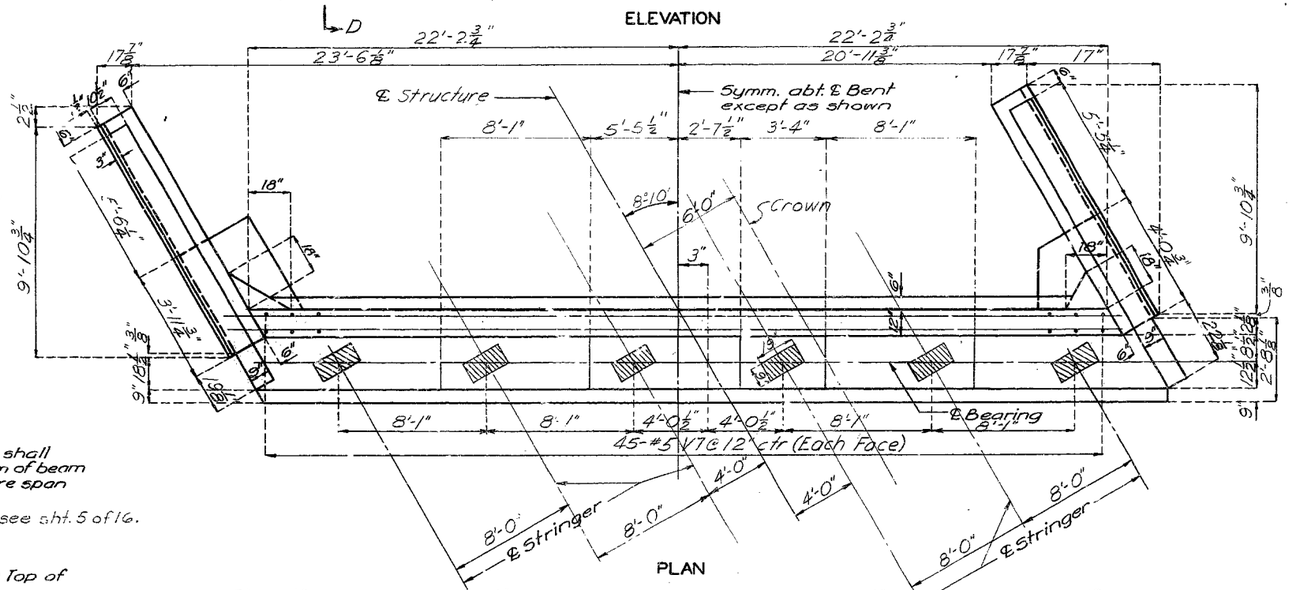

PLAN

Note: Fill at end bent No. 1 shall not be carried above bottom of beam until adjacent superstructure span is in place.

For additional notes see sht. 5 of 16.

Butt splice (if required) Top of lower section to be cut square

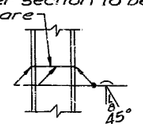

STEEL PILE SPLICE

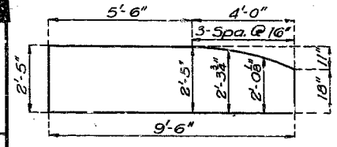

END POST ORDINATES

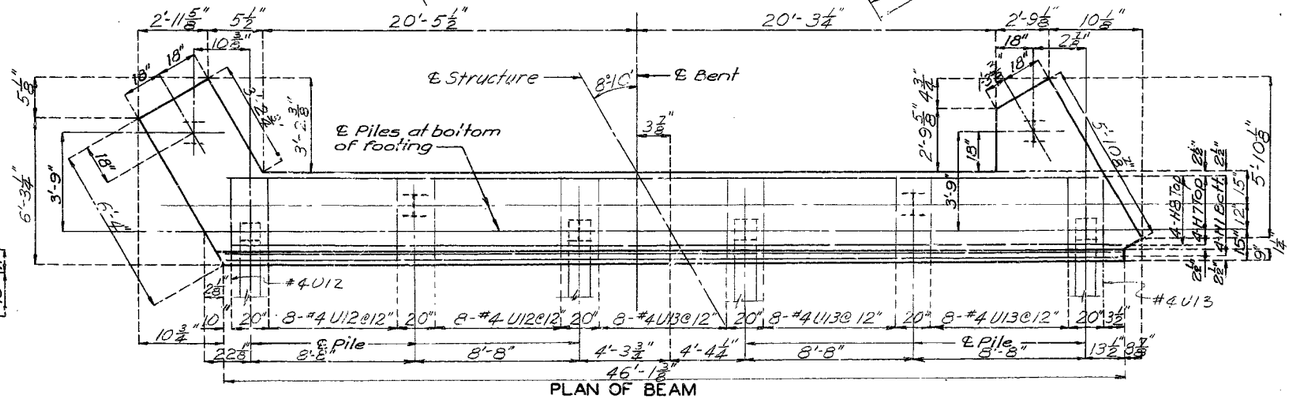

PLAN OF BEAM

DETAILS OF END BENT NO. 1 LEFT LANE

Note: This drawing is not to scale. Follow dimensions.

Sheet No. 4 of 16.

BRIDGE OVER MISSOURI PACIFIC RAILROAD

STATE ROAD - INTERSTATE ROUTE 435

ABOUT 4.5 MILES NORTH OF MARTIN CITY

PROJECT NO. IR-435-1(53)(RTE. I-435) **STA.** 933+70.30 (LEFT LANE) 933+59.40 (RIGHT LANE)

JACKSON **COUNTY**

A-427

288

No.	Date	Revised
12.3	April 1965	

BOPP & SALLER & ASSOCIATES

DETAILED Oct. 1965 BY DAB

CHECKED Oct. 1965 BY AJS

MISSOURI STATE HIGHWAY DEPARTMENT

FED ROAD DIST. NO.	STATE	FED AID PROJ. NO.	FISCAL YEAR	SHEET NO.	TOTAL SHEETS
5	MO.		19	119	

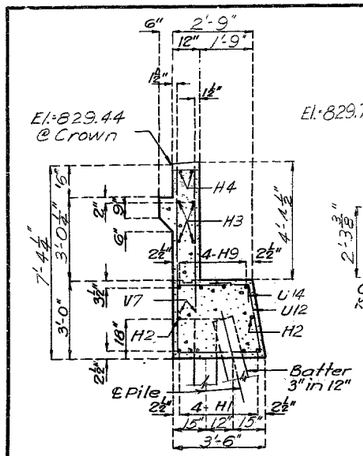

SECTION

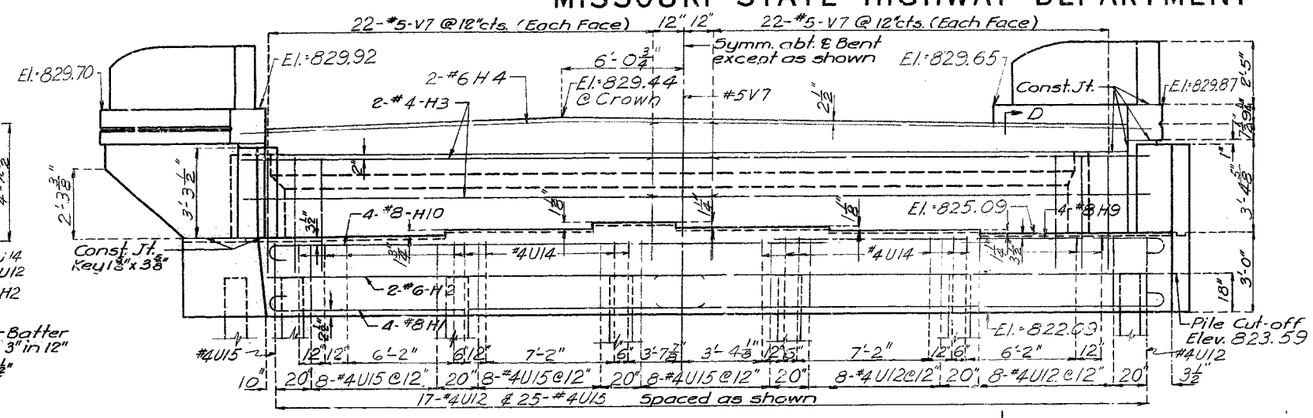

ELEVATION

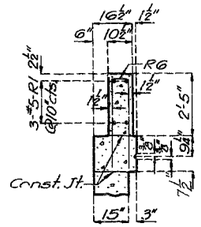

PART SECTION A-A

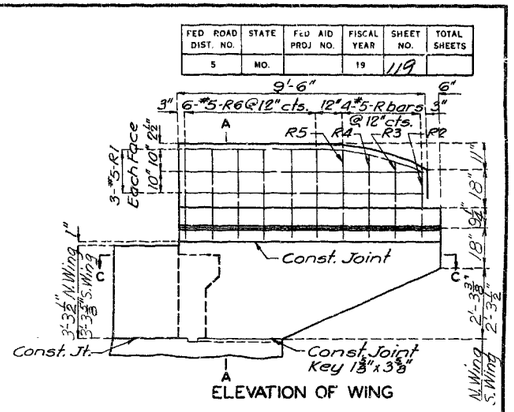

ELEVATION OF WING

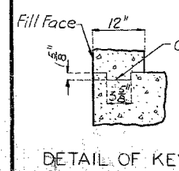

DETAIL OF KEYED CONST. JOINT

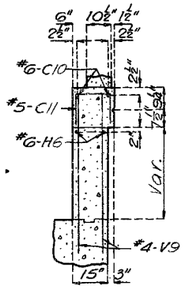

SECTION B-B

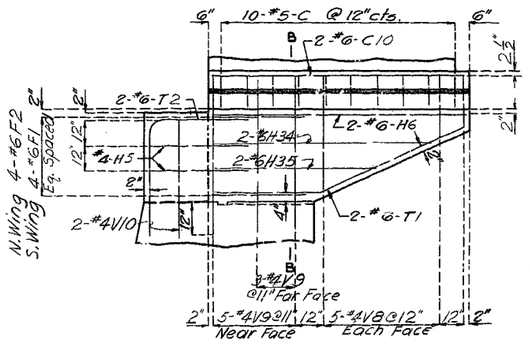

PART ELEVATION OF WING

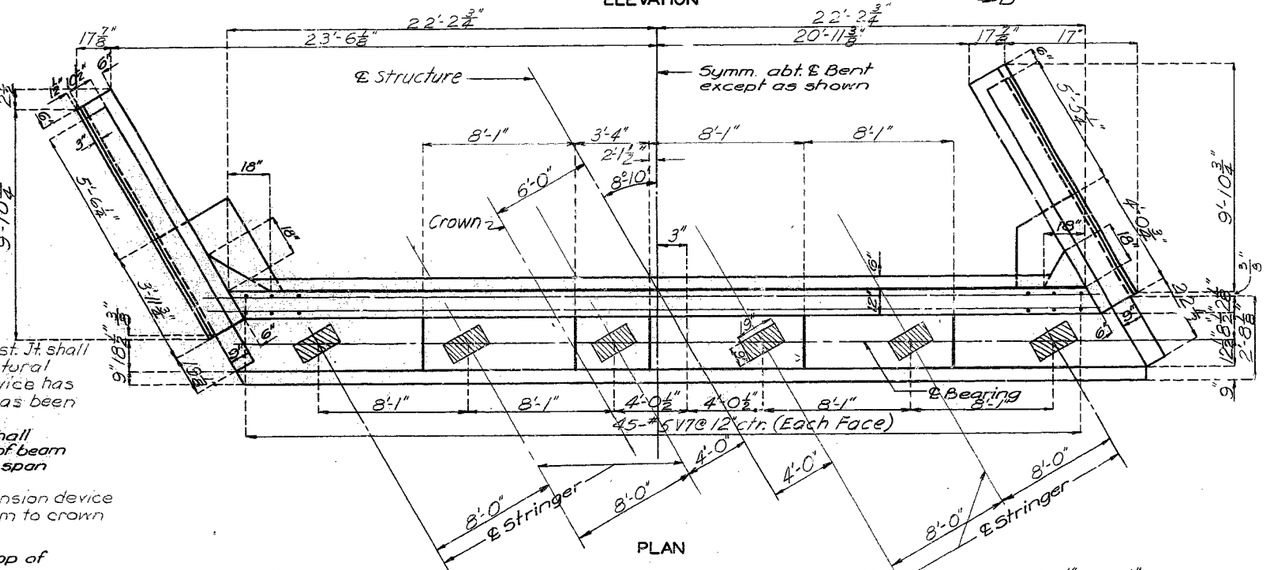

PLAN

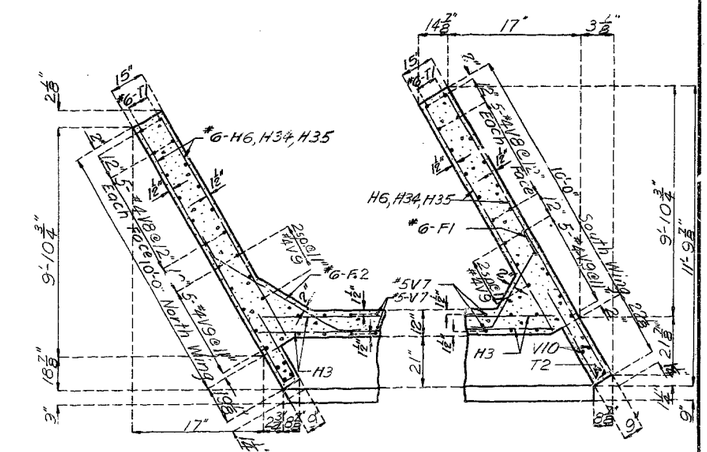

SECTION C-C

SECTION C-C

Notes:

For Details of Timber Header See sht. 7 of 16.

Backwall above upper Const. Jt. shall not be poured until the structural steel of the expansion device has been installed and slab has been poured in adjacent slab.

Fill at end bent No. 1 shall not be carried above bottom of beam until adjacent superstructure span is in place.

Top of backwall and expansion device for End Bents 1 & 6 to conform to crown of roadway slab.

Butt splice (if required) Top of lower section to be cut square

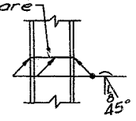

STEEL PILE SPLICE

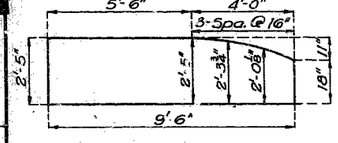

END POST ORDINATES

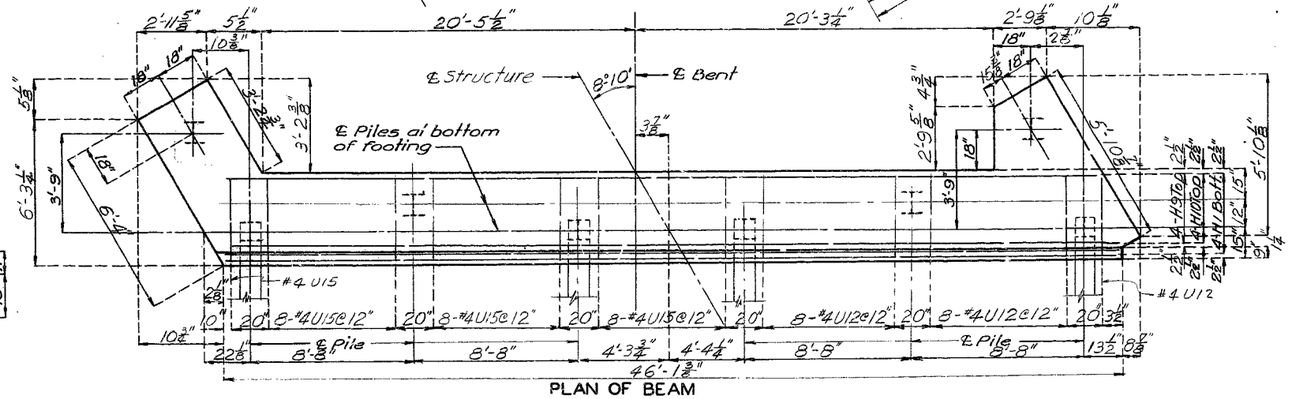

PLAN OF BEAM

DETAILS OF END BENT NO. 1 RIGHT LANE

Note: This drawing is not to scale. Follow dimensions.

Sheet No. 5 of 16.

BRIDGE OVER MISSOURI PACIFIC RAILROAD

STATE ROAD - INTERSTATE ROUTE 435

ABOUT 4.5 MILES NORTH OF MARTIN CITY

PROJECT NO. IHG-435-1(53)(RTE. I-435) **STA.** 933+703 (LEFT LANE) 933+594 (RIGHT LANE)

JACKSON **COUNTY**

A-427

BOPP & SALLER & ASSOCIATES

DETAILED Oct. 1965 BY DAB

CHECKED Oct. 1965 BY AJS

No. 12.3 | April 1965 | Revised

289

MISSOURI STATE HIGHWAY DEPARTMENT

FED. ROAD DIST. NO	STATE	FED. AID PROJ. NO	FISCAL YEAR	SHEET NO.	TOTAL SHEETS
5	MO.		19	120	

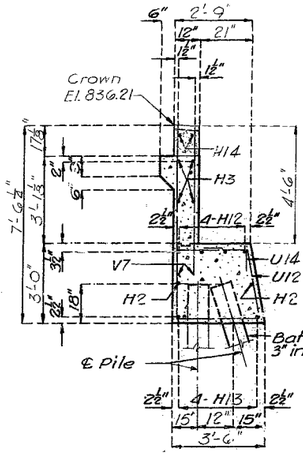

SECTION C-C

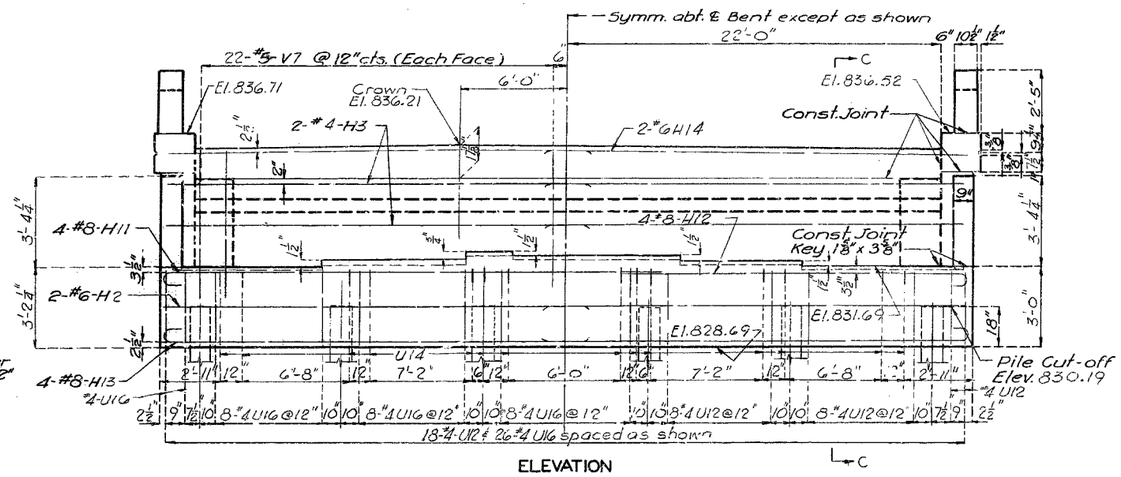

ELEVATION

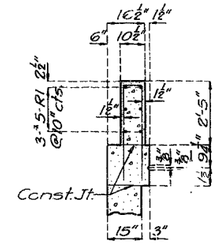

PART SECTION A-A

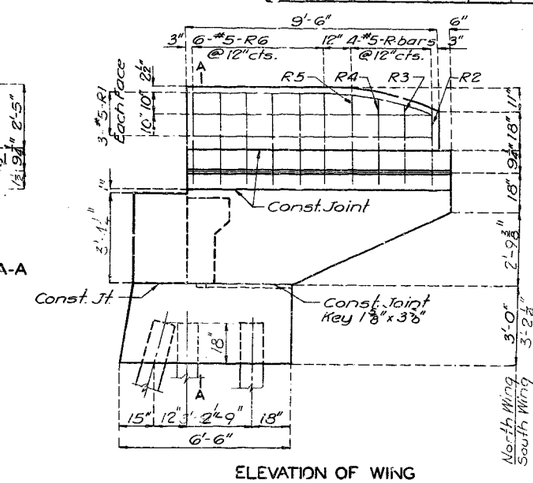

ELEVATION OF WING

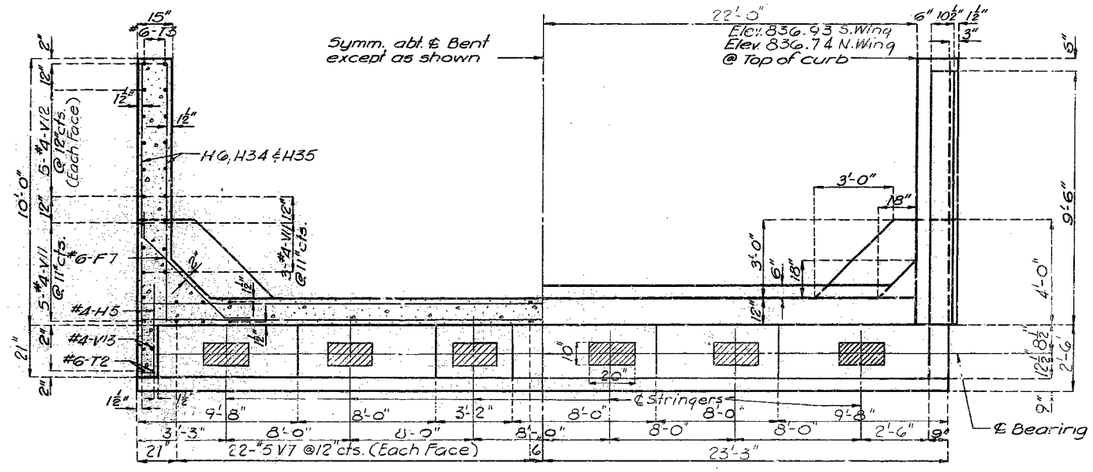

PLAN

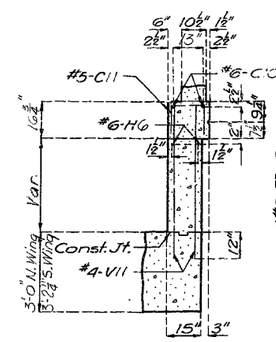

SECTION B-B

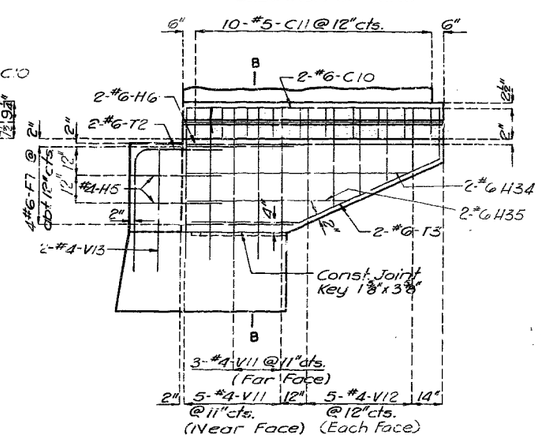

PART ELEVATION OF WING

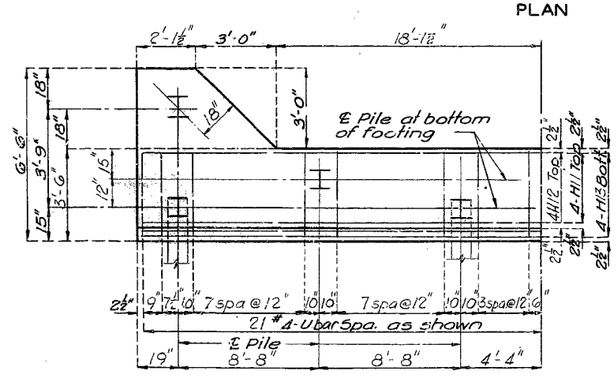

PLAN OF BEAM

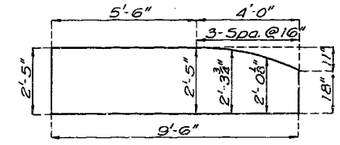

END POST ORDINATES

Butt splice (if required) Top of lower section to be cut square

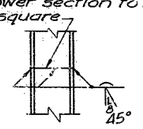

STEEL PILE SPLICE

Note: Fill at end bent No. 6 shall not be carried above bottom of beam until adjacent superstructure span is in place.

For additional notes, see sheet 5 of 16.

Note: For details of timber header, see sheet 7 of 16.
For Const. Joint Detail see sheet 5 of 16.

BRIDGE OVER MISSOURI PACIFIC RAILROAD

STATE ROAD - INTERSTATE ROUTE 435

ABOUT 4.5 MILES NORTH OF MARTIN CITY

PROJECT NO. IHG-435-1(53)(RTE I-435) **STA.** 933+70.30 (LEFT LANE) 933+59.40 (RIGHT LANE)

JACKSON **COUNTY**

A-427

BOPP & SALLER & ASSOCIATES

DETAILED OCT. 1965 **BY** W.C.H.

CHECKED OCT. 1965 **BY** A.J.S.

No. 12.1 April 1965 Revised

290

DETAILS OF END BENT NO. 6 LEFT LANE

Note: This drawing is not to scale. Follow dimensions.

Sheet No. 6 of 16.

MISSOURI STATE HIGHWAY DEPARTMENT

FED ROAD DIST. NO.	STATE	FED AID PROJ. NO.	FISCAL YEAR	SHEET NO.	TOTAL SHEETS
5	MO.		19	121	

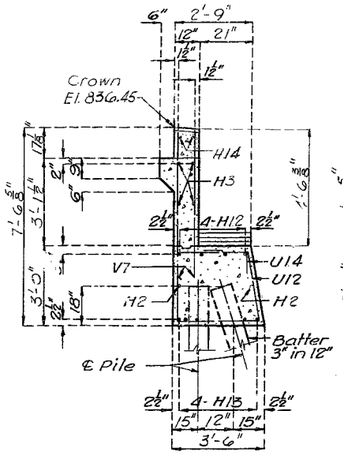

SECTION C-C

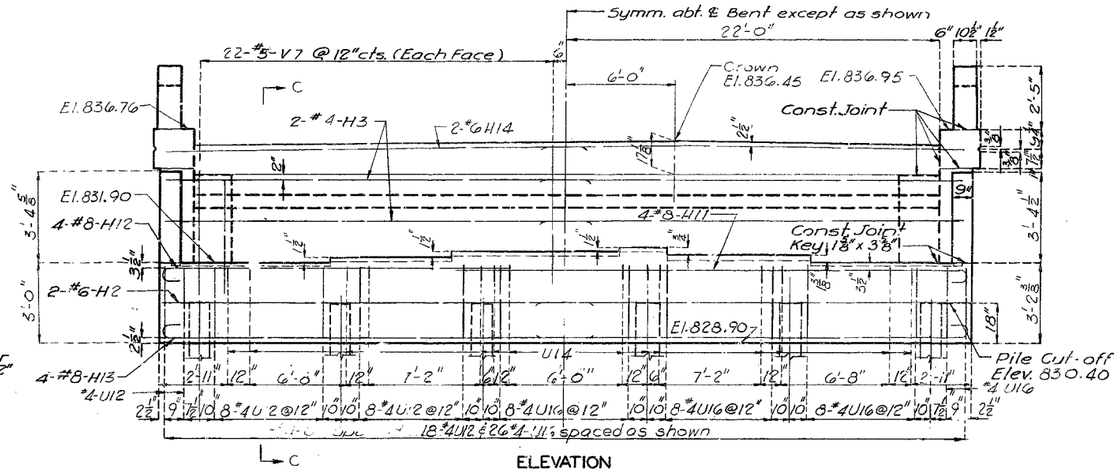

ELEVATION

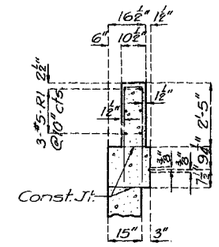

PART SECTION A-A

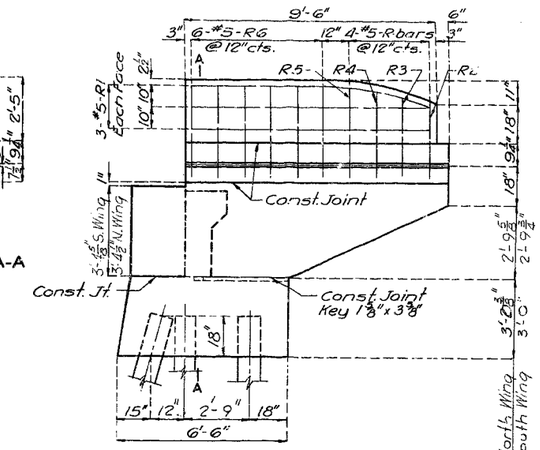

ELEVATION OF WING

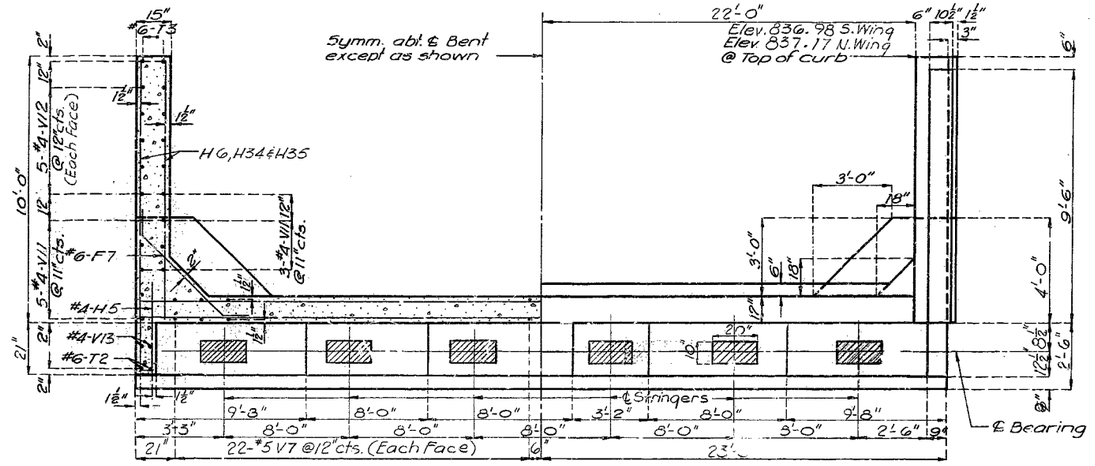

PLAN

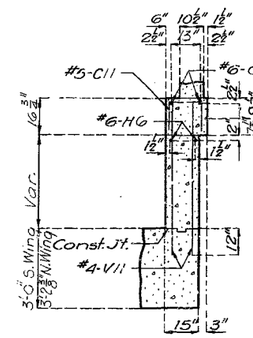

SECTION B-B

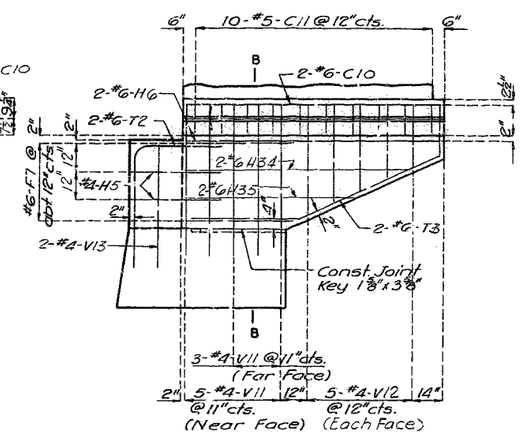

PART ELEVATION OF WING

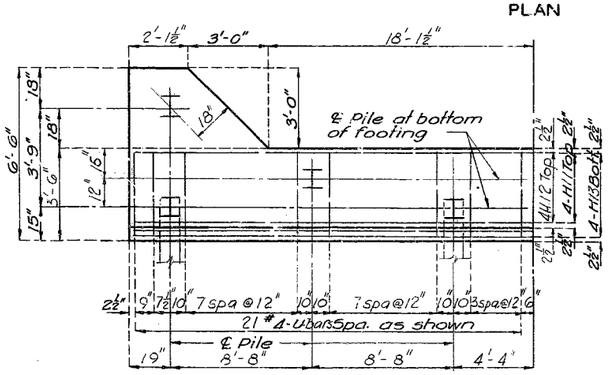

PLAN OF BEAM

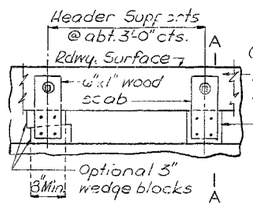

PART ELEVATION

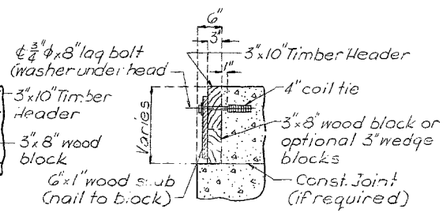

SECTION A-A

DETAILS OF TIMBER HEADER

Note: Cost of timber headers complete in place to be included in price bid for Concrete for Const. Joint Detail see sheet 5 of 16.

END POST ORDINATES

Note: Fill at end bent No. 6 shall not be carried above bottom of beam until adjacent superstructure span is in place.

For additional notes, see sheet 5 of 16.

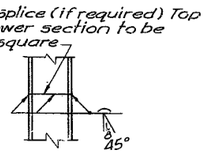

STEEL PILE SPLICE

BRIDGE OVER MISSOURI PACIFIC RAILROAD

STATE ROAD - INTERSTATE ROUTE 435

ABOUT 4.5 MILES NORTH OF MARTIN CITY

PROJECT NO. IG-435-1(53)(RTE. I-435) **STA.** 933+70.3 (LEFT LANE) 933+59.40 (RIGHT LANE)

JACKSON **COUNTY**

A-1427

BOPP & SALLER & ASSOCIATES

DETAILED OCT. 1965 BY W.C.H.

CHECKED OCT. 1965 BY A.J.S.

No. 121	April 1965	Revised

DETAILS OF END BENT NO. 6 RIGHT LANE

Note: This drawing is not to scale. Follow dimensions.

Sheet No. 7 of 16.

291

MISSOURI STATE HIGHWAY DEPARTMENT

FED ROAD DIST NO	STATE	FED AID PROJ NO	FISCAL YEAR	SHEET NO	TOTAL SHEETS
5	MO		19	122	

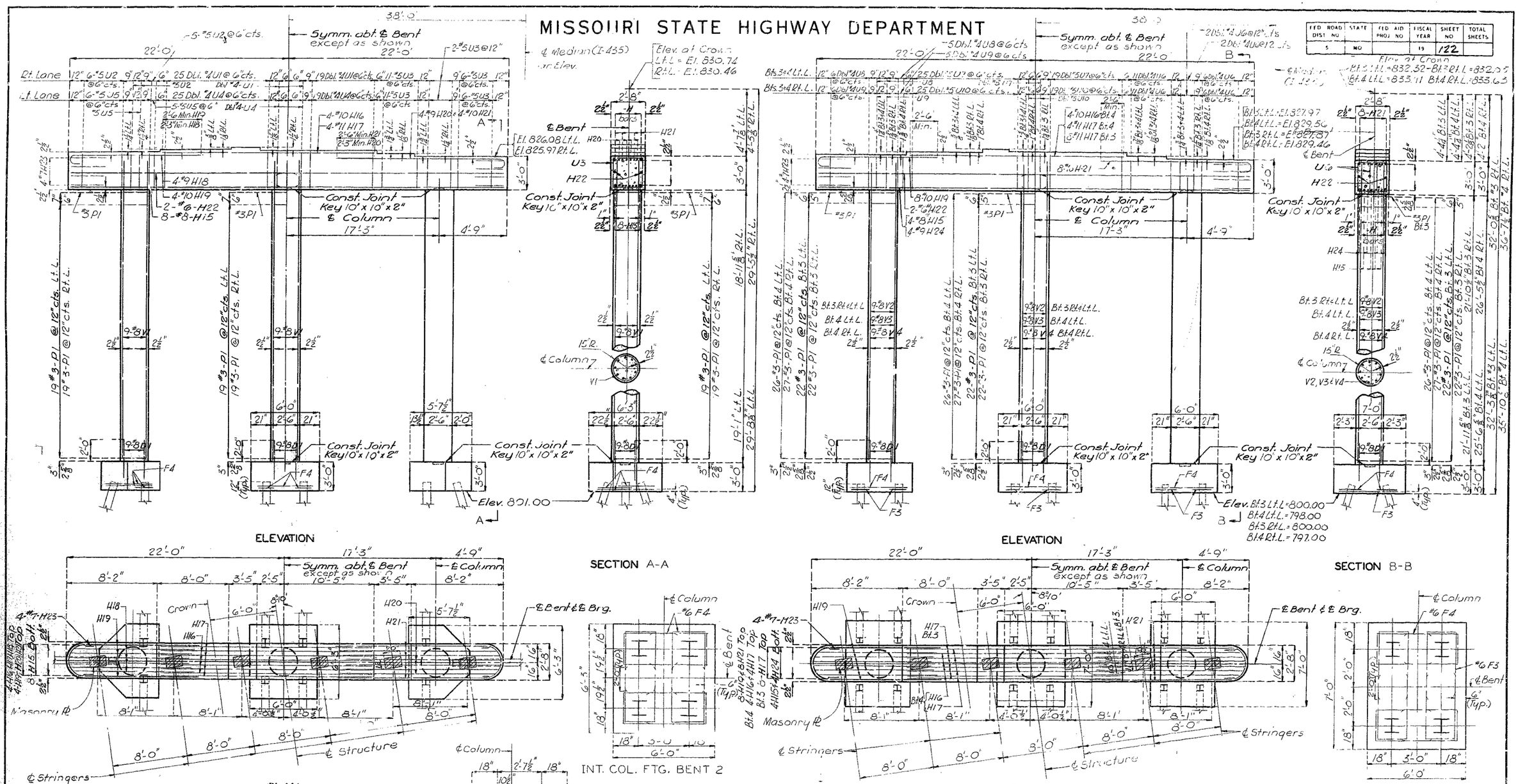

Note: All piles to be 10BP42 and have a 2" in 12" batter.

BRIDGE OVER MISSOURI PACIFIC RAILROAD

STATE ROAD - INTERSTATE ROUTE 435

ABOUT 4.5 MILES N. & E. OF MARTIN CITY

PROJECT NO I-IG-435-1(53)(RTE.I-435) **STA.** 933+70.30(LEFT LANE) 933+59.40(RIGHT LANE)

JACKSON **COUNTY**

A-1427

BOPP & SALLER & ASSOCIATES

DETAILED OCT. 1965 BY W.C.H.

CHECKED OCT. 1965 BY A.J.S.

Note: This drawing is not to scale. Follow dimensions.

Sheet No. 8 of 16

No. 19.6	Revised
Sept. 1962	Jan. 1965

292

MISSOURI STATE HIGHWAY DEPARTMENT

FED. ROAD DIST. NO.	STATE	FED. AID PROJ. NO.	FISCAL YEAR	SHEET NO.	TOTAL SHEETS
5	MO		19	123	

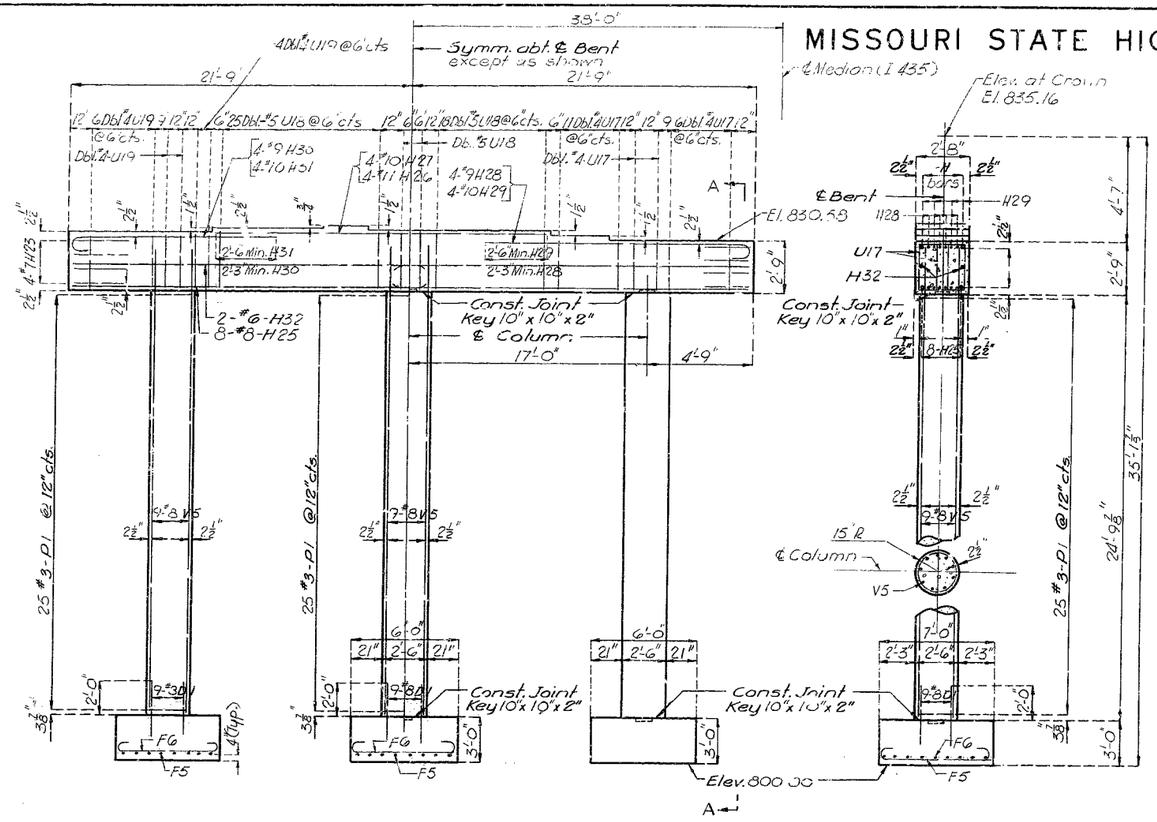

ELEVATION

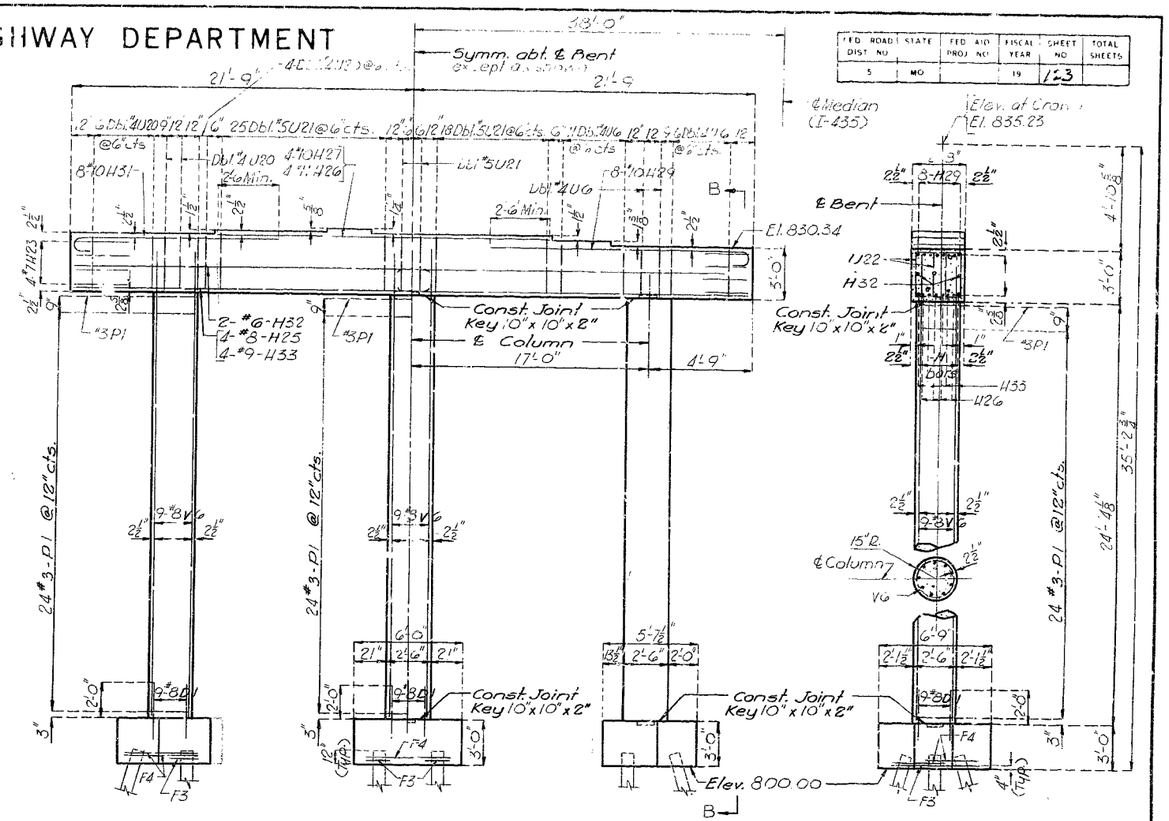

ELEVATION

SECTION A-A

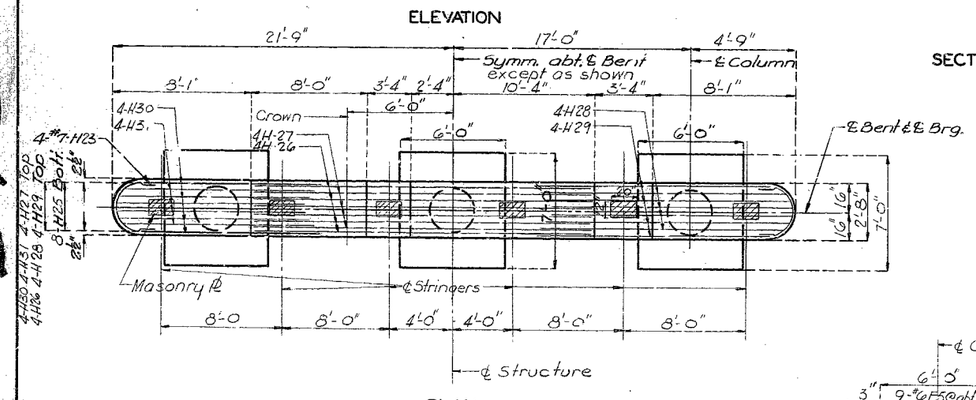

PLAN

DETAILS OF INTERMEDIATE BENT NO. 5 LEFT LANE

Looking Up Station

Note: All piles to be 10 BP 42 and have a 2" in 12" batter.

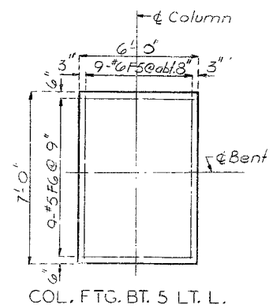

COL. FTG. BT. 5 LT. L.

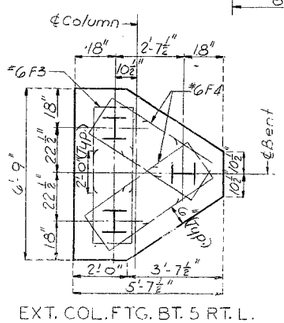

EXT. COL. FTG. BT. 5 RT. L.

SECTION B-B

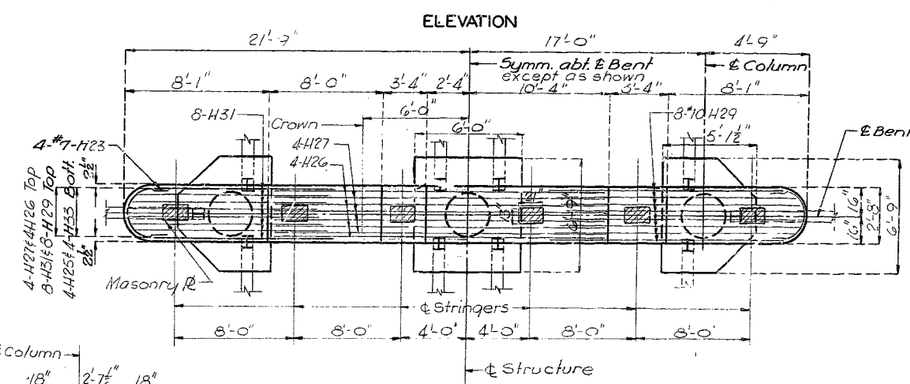

PLAN

DETAILS OF INTERMEDIATE BENT NO. 5 RIGHT LANE

Looking Down Station

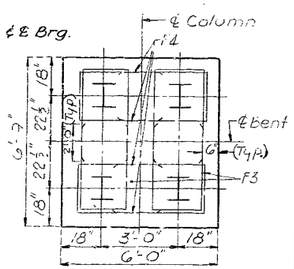

INT. COL. FTG. BT. 5 RT. L.

BRIDGE OVER MISSOURI PACIFIC RAILROAD

STATE ROAD - INTERSTATE ROUTE 435

ABOUT 4.5 MILES NORTH OF MARTIN CITY

PROJECT NO. IC-435-1(53)(RTE. I-435) **STA.** 933+7030 (LEFT LANE) 933+5940 (RIGHT LANE)

JACKSON **COUNTY**

No.	Date	Revised
19.6	Sept 1962	Jan. 1965

BOPP & SALLER & ASSOCIATES

DETAILED OCT. 1965 BY W.C.H.

CHECKED OCT. 1965 BY A.J.S.

Note: This drawing is not to scale. Follow dimensions.

Sheet No. 9 of 16

A-427

293

Note: Longitudinal dimensions shown are taken parallel to grade at ℄ Structure

MISSOURI STATE HIGHWAY DEPARTMENT

FED. ROAD DIST. NO	STATE	FED. AID PROJ. NO.	FISCAL YEAR	SHEET NO.	TOTAL SHEETS
5	MO.		19	124	

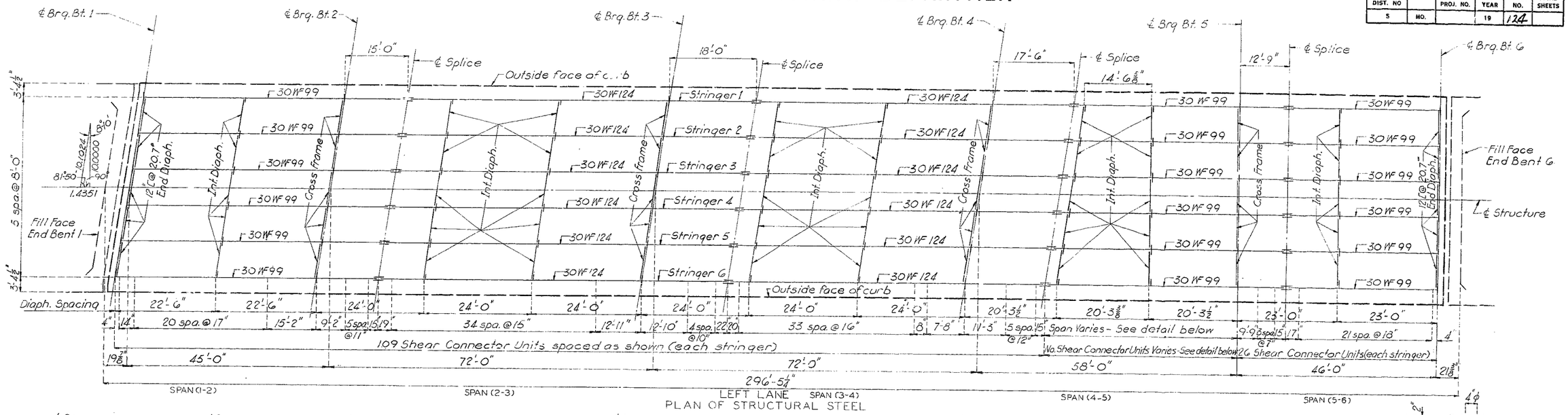

PLAN OF STRUCTURAL STEEL

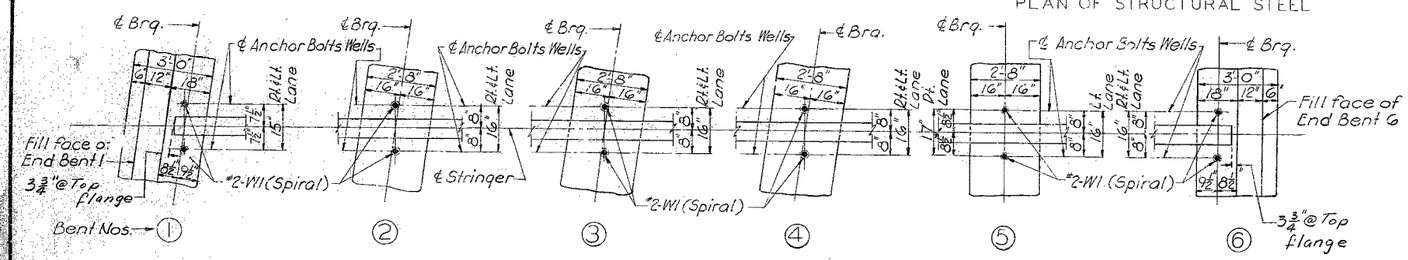

PART ANCHOR BOLT PLAN

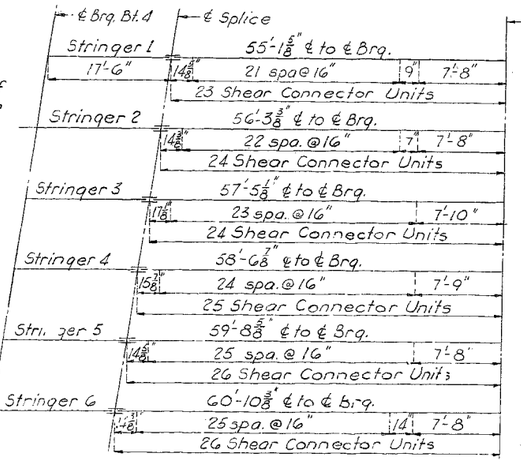

PARTIAL PLAN - VARIABLE SPAN

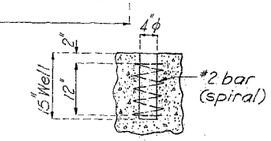

Note: Anchor bolts for Type "D" bearing may be set in wells as shown or in holes drilled into concrete substructure.

DETAIL OF ANCHOR BOLT WELLS

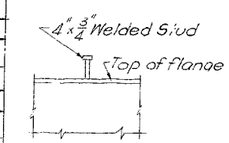

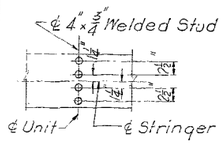

DETAILS OF SHEAR CONNECTORS

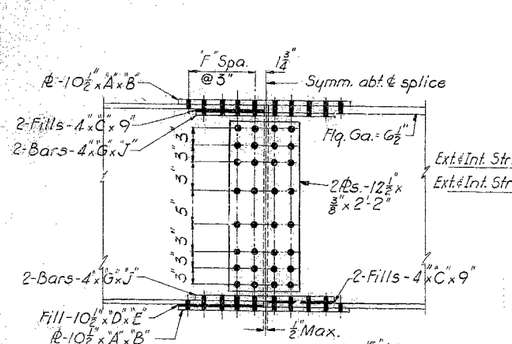

Note: 15/16" ϕ Reamed holes

	"A"	"B"	"C"	"D"	"E"	"F" Spa.	"G"	"J"
30WF@99# to 99#	7/16"	2'-0 1/2"	—	—	—	3	1/2"	18 1/2"
30WF@99# to 124#	7/16"	2'-0 1/2"	1/4"	1/2"	12"	3	1/2"	18 1/2"
30WF@124# to 124#	5/8"	3'-0 1/2"	—	—	—	5	1/2"	18 3/8"

SPLICE DETAILS

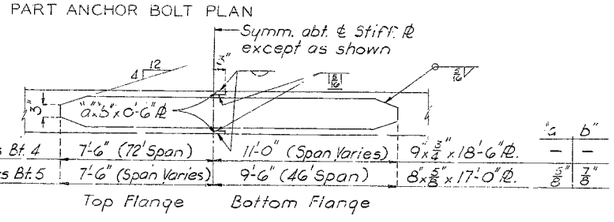

	Top Flange	Bottom Flange	"a"	"b"
Ext. & Int. Stringers Bt. 4	7'-6" (72' Span)	11'-0" (Span Varies)	9" x 3/4" x 18'-6" Pl.	—
Ext. & Int. Stringers Bt. 5	7'-6" (Span Varies)	9'-6" (46' Span)	8" x 5/8" x 17'-0" Pl.	7/8"

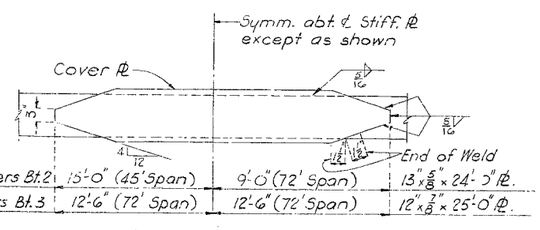

Ext. & Int. Stringers Bt. 2	15'-0" (45' Span)	9'-0" (72' Span)	13" x 5/8" x 24'-3" Pl.
Ext. & Int. Stringers Bt. 3	12'-6" (72' Span)	12'-6" (72' Span)	12" x 7/8" x 25'-0" Pl.

COVER PLATE DETAILS

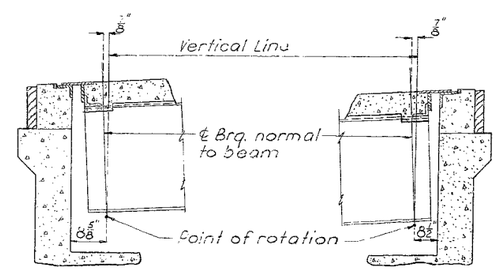

PART LONGITUDINAL SECTION

Note:

Work this sheet with sheet 11 of 16

BRIDGE OVER MISSOURI PACIFIC RAILROAD

STATE ROAD - INTERSTATE ROUTE 435

ABOUT 4.5 MILES NORTH OF MARTIN CITY

PROJECT NO. J-IG-435-1(53) (RTE. I-435) **STA.** 933+70.30 (LEFT LANE) 933+59.40 (RIGHT LANE)

JACKSON **COUNTY**

BOPP & SALLER & ASSOCIATES

DETAILED OCT. 1965 **BY** W.C.H.

CHECKED OCT. 1965 **BY** A.J.S.

Note: This drawing is not to scale. Follow dimensions.

Sheet No. 10 **of** 16.

A-1427

294

MISSOURI STATE HIGHWAY DEPARTMENT

FED. ROAD DIST. NO.	STATE	FED. AID PROJ. NO.	FISCAL YEAR	SHEET NO.	TOTAL SHEETS
5	MO.		19	12	

Note: Longitudinal dimensions shown are taken parallel to grade at ℄ Structure

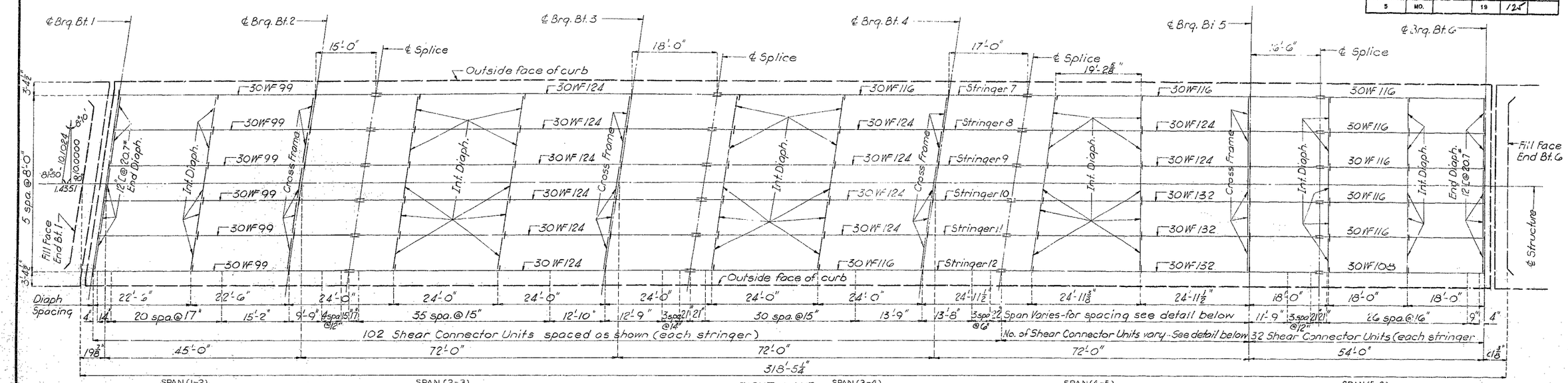

RIGHT LANE
PLAN OF STRUCTURAL STEEL

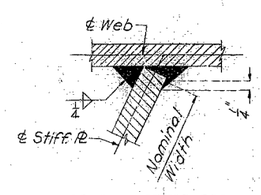

BEARING STIFFENERS
WELDING DETAILS

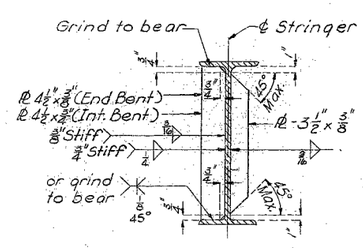

WELDING DETAILS

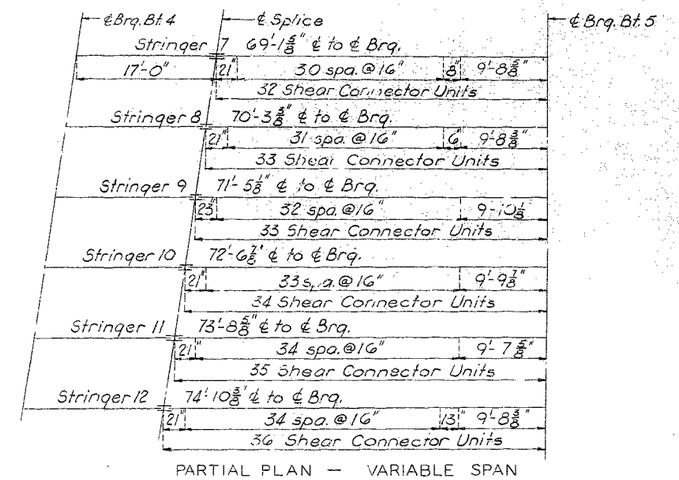

PARTIAL PLAN — VARIABLE SPAN

	"A"	"B"	"C"	"D"	"E"	"F" Spa.	"G"	"J"
30WF@99# to 124#	7/16"	2'-0½"	¼"	½"	12"	3	½"	18⅝"
30WF@108# to 132#	½"	2'-6½"	¼"	½"	15"	4	½"	18½"
30WF@116# to 116#	⅝"	3'-0½"	—	—	—	5	½"	18⅝"
30WF@116# to 124#	⅝"	3'-0½"	14 Ga.	8 Ga.	18"	5	½"	18½"
30WF@116# to 132#	⅝"	3'-0½"	9 Ga.	5/16"	18"	5	½"	18½"
30WF@124# to 132#	⅝"	3'-0½"	15 Ga.	10 Ga.	18"	5	½"	18½"
30WF@124# to 124#	⅝"	3'-0½"	—	—	—	5	½"	18½"

SPLICE DATA

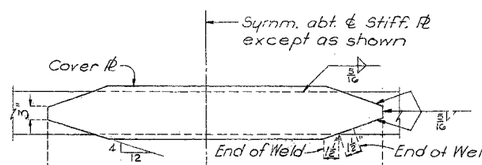

Ext. & Int. Stringers Bt. 2	15'-0" (45'-Span)	9'-6" (72' Span)	13"x⅝"x24'-6" Pl
Ext. & Int. Stringers Bt. 3	12'-6" (72' Span)	12'-6" (72' Span)	13"x⅝"x25'-0" Pl
Stringers 7,8 & 9-Bt. 4	12'-6" (72' Span)	12'-6" (Span Varies)	12"x¾"x25'-0" Pl
Stringers 10,11 & 12-Bt. 4	13'-6" (72' Span)	13'-6" (Span Varies)	12"x⅞"x27'-0" Pl
Ext. & Int. Stringers Bt. 5	9'-6" (Span Varies)	11'-6" (54' Span)	12"x⅝"x21'-0" Pl

COVER PLATE

Note: Work this sheet with sheet 10 of 16.

BRIDGE OVER MISSOURI PACIFIC RAILROAD
STATE ROAD - INTERSTATE ROUTE 435
ABOUT 4.5 MILES NORTH OF MARTIN CITY
PROJECT NO. I-IG-435-1(53)(RTE. I-435) **STA.** 933+70.30 (LEFT LANE) 933+59.40 (RIGHT LANE)
JACKSON **COUNTY**

A-1427

BOPP & SALLER & ASSOCIATES
DETAILED OCT. 1965 **BY** W.C.H.
CHECKED OCT. 1965 **BY** A.J.S.

Note: This drawing is not to scale. Follow dimensions.

Sheet No. 11 **of** 16.

NO CONSTRUCTION CHANGES

295

MISSOURI STATE HIGHWAY DEPARTMENT

FED. ROAD DIST. NO.	STATE	FED. AID PROJ. NO.	FISCAL YEAR	SHEET NO.	TOTAL SHEETS
5	MO.		19	126	

Note: Longitudinal Reinforcing steel shall be placed so that ends shall not be more than 1" from 3/8" Pl. at Exp. Device.

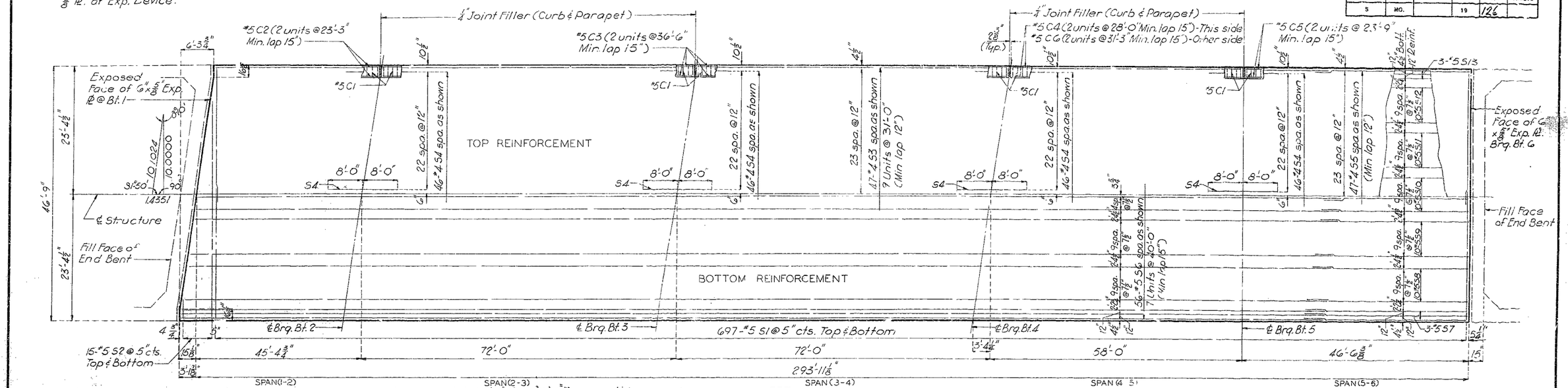

LEFT LANE
PLAN OF SLAB SHOWING REINFORCEMENT

Note: Longitudinal dimensions shown are taken parallel to grade at ℄ Structure

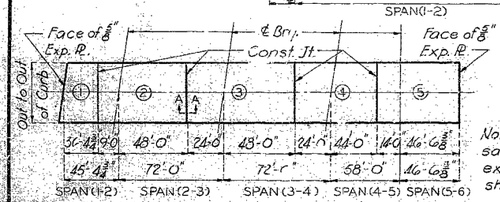

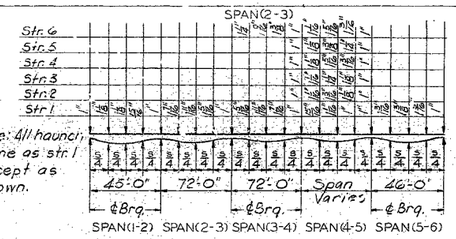

Note: All haunches same as str. 1 except as shown.

Note: Haunch slab to the top of stringers by the dimensions shown. Dead load deflection is included in the haunches. The additional concrete (flange, flange plates, splice plates etc. excluded) is included in Estimated Quantities.

THEORETICAL SLAB HAUNCHING DIAGRAM

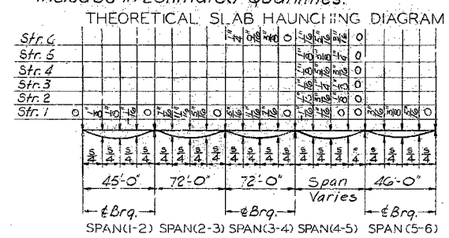

12% Structural Steel
DEAD LOAD DEFLECTION
Note: All deflections same as stringer 1 except as shown.

	Sequence of Pours				
	Direction				
Basic Sequence	1 E.D.	2 1 to 3	3 2 to 4	4 3 to 5	5 4 to End
Alternate "A" Pours	1+2 End to 3		3 2 to 4	4 to 5 3 to End	
Alternate "B" Pours	1+2+3 End to 4			4+5 3 to End	
Alternate "C" Pours	1+2+3+4+5 End to End				

Note: The contractor shall use an approved oscillating screed type, self-propelled mechanical finishing machine and shall pour and satisfactorily finish the slab pours at a rate of not less than 39 cubic yards per hour unless he elects to use an approved retarder at his own expense to retard the set of the concrete to 2.5 hours in which case he may reduce his pouring and finishing rate to not less than 25 cubic yards per hour. The contractor shall observe the basic pouring sequence unless he can demonstrate to the engineer that he can pour and satisfactorily finish one of the longer alternate pours. Finishing machine loads will not be permitted on concrete less than 48 hours old.

SLAB POURING SEQUENCE

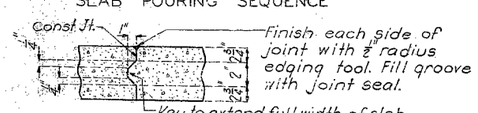

SECTION A-A

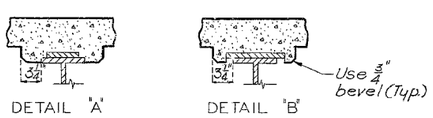

DETAIL "A" DETAIL "B"

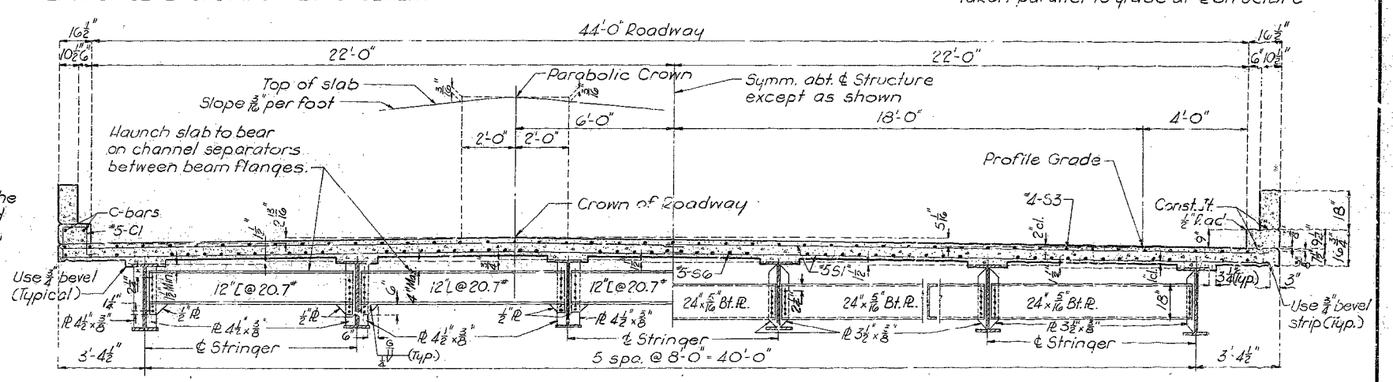

HALF SECTION NEAR END DIAPH.

HALF SECTION NEAR INT. DIAPH.

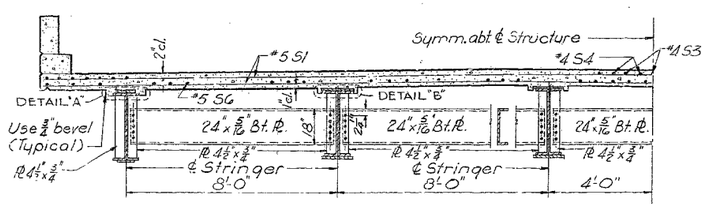

HALF SECTION AT INT BENTS

Note: Curb to be cast independently of slab. For details of curb and hardrail not shown see sht. 16 of 16.
Slab to be constructed parallel to grade and to a min. thickness of 7 1/2" or, if desired, the bottom of the slab may be built on chords between tops of haunches at stringers.
Work this sheet with sht. 13 of 16.

BRIDGE OVER MISSOURI PACIFIC RAILROAD
STATE ROAD - INTERSTATE ROUTE 435
ABOUT 4.5 MILES NORTH OF MARTIN CITY
PROJECT NO. IG-435-1(53)(RTE. I-435) **STA.** 933+70.30 (LEFT LANE) 933+59.40 (RIGHT LANE)
JACKSON **COUNTY**

BOPP & SALLER & ASSOCIATES
DETAILED OCT. 1965 **BY** W.C.H.
CHECKED OCT. 1965 **BY** A.J.S.

Note: *This drawing is not to scale. Follow dimensions.*

Sheet No. 12 **of** 16

A-1427

NO CONSTRUCTION CHANGES

MISSOURI STATE HIGHWAY DEPARTMENT

FED. ROAD DIST. NO.	STATE	FED. AID PROJ. NO.	FISCAL YEAR	SHEET NO	TOTAL SHEETS
5	MO.		19	127	

Note: Longitudinal Reinforcing steel shall be placed so that ends shall not be more than 1" ± from 8⅝" ℄. at Exp. Device.

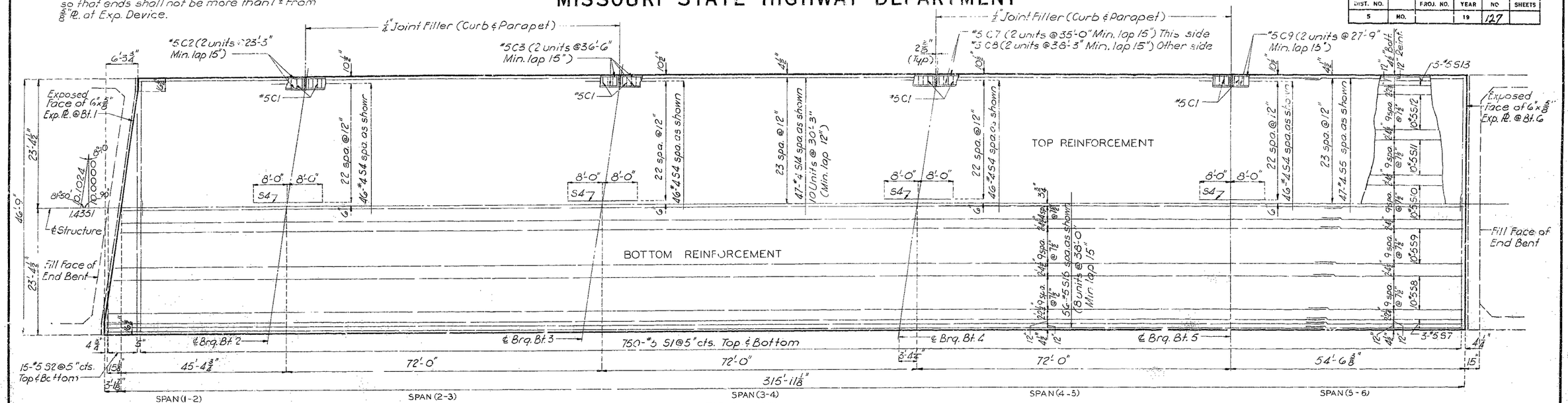

RIGHT LANE
PLAN OF SLAB SHOWING REINFORCEMENT

Note: Longitudinal dimensions shown are taken parallel to grade at ℄ structure.

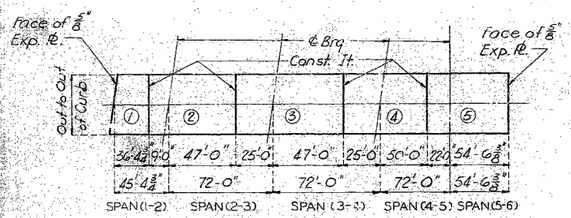

SLAB POURING DIAGRAM

Note: For Sequence of Pours see sht. 12 of 16

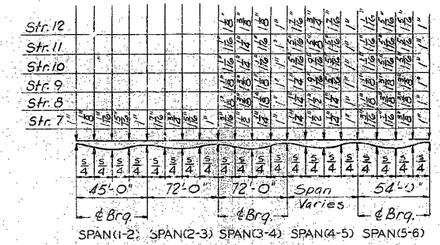

Note: All haunch same as stringer 7 except as shown.

Note: Haunch slab to the top of stringers by the dimensions shown. Dead load deflection is included in the haunches. The additional concrete (flange, flange plates, splice plates etc. excluded) is included in Estimated Quantities.

THEORETICAL SLAB HAUNCHING DIAGRAM

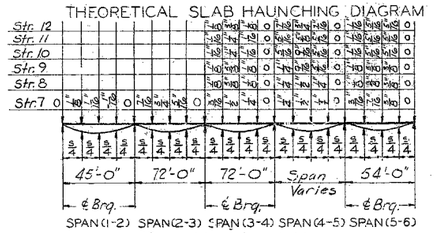

12 % Structural Steel

DEAD LOAD DEFLECTION

Note: All deflections same as stringer 7 except as shown.

Note: Work this sheet with sht. 12 of 16

BRIDGE OVER MISSOURI PACIFIC RAILROAD

STATE ROAD - INTERSTATE ROUTE 435

ABOUT 4.5 MILES NORTH OF MARTIN CITY

PROJECT NO. I-IG-435-1(53)(RTE. I-435) **STA.** 933+70.30 (LEFT LANE) 933+59.40 (RIGHT LANE)

JACKSON **COUNTY**

A-1427

BORR & SALLER & ASSOCIATES
DETAILED OCT. 1965 **BY** W.C.H.
CHECKED OCT. 1965 **BY** A.J.S.

Note: *This drawing is not to scale. Follow dimensions.*

Sheet No. 13 **of** 16.

NO CONSTRUCTION CHANGES

127

MISSOURI STATE HIGHWAY DEPARTMENT

FED DIST	ROAD NO	STATE	FED AID PROJ NO	FISCAL YEAR	SHEET NO	TOTAL SHEETS
5	MO			19	128	

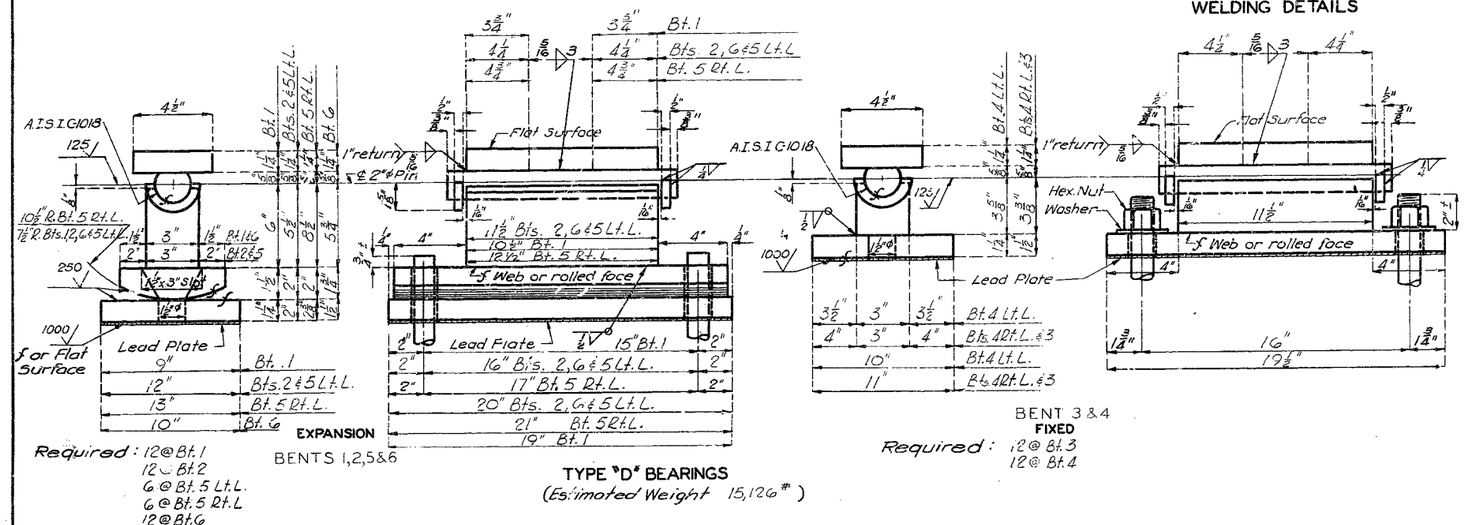

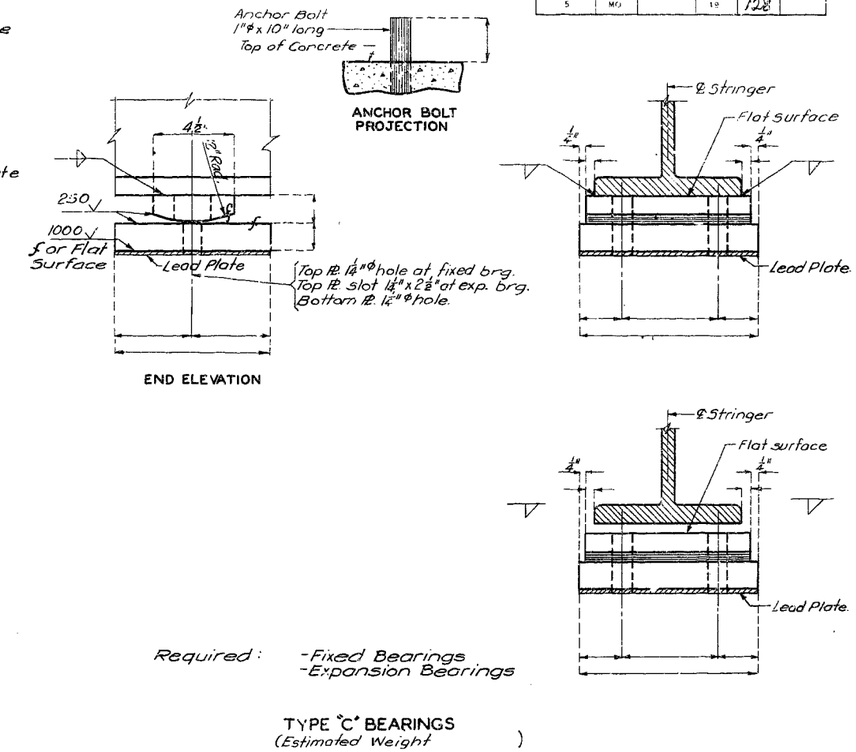

NOTES: TYPE "C" BEARINGS

Anchor Bolts for Type "C" Bearings shall be 1"φ swedged bolts, 10" long with no heads or nuts. Top of Anchor Bolts shall be set approximately ¼" below top of bearing.

NOTES: TYPE "D" BEARINGS

Anchor Bolts for Type "D" Bearings shall be 1¼"φ swedged bolts and shall extend 12" into concrete, with hexagon nuts and plain washers for Fixed Bearings, no nuts for Expansion Bearings.

Rockers and pedestals shall be machined after welding.

GENERAL NOTES:

Lead plates under bearings shall be approximately ⅛" thickness and weight 8#/sq. ft. Cost of lead plates shall be included in price bid for other items.

"Estimated Weight" does not include weight of anchor bolts.

Where flat surface is indicated, tolerance shall be .003 in/in in any direction.

BRIDGE OVER MISSOURI PACIFIC RAILROAD

STATE ROAD - INTERSTATE ROUTE 435

ABOUT 4.5 MILES NORTH OF MARTIN CITY

PROJECT NO. I-IC-435-1(53)(RTE.I-435) **STA** 933+7020(LEFT LANE) 933+5940(RIGHT LANE)

JACKSON **COUNTY**

A-1427

298

No. 4.1	Revised
Dec. 1961	Feb. 1965

BOPP & SALLER & ASSOCIATES

DETAILED OCT. 1965 BY W.C.H.

CHECKED OCT. 1965 BY A.J.S.

Note: This drawing is not to scale. Follow dimensions.

Sheet No. 14 of 16

MISSOURI STATE HIGHWAY DEPARTMENT

FED ROAD DIST NO	STATE	FED AID PROJ NO	FISCAL YEAR	SHEET NO	TOTAL SHEETS
5	MO		19	129	

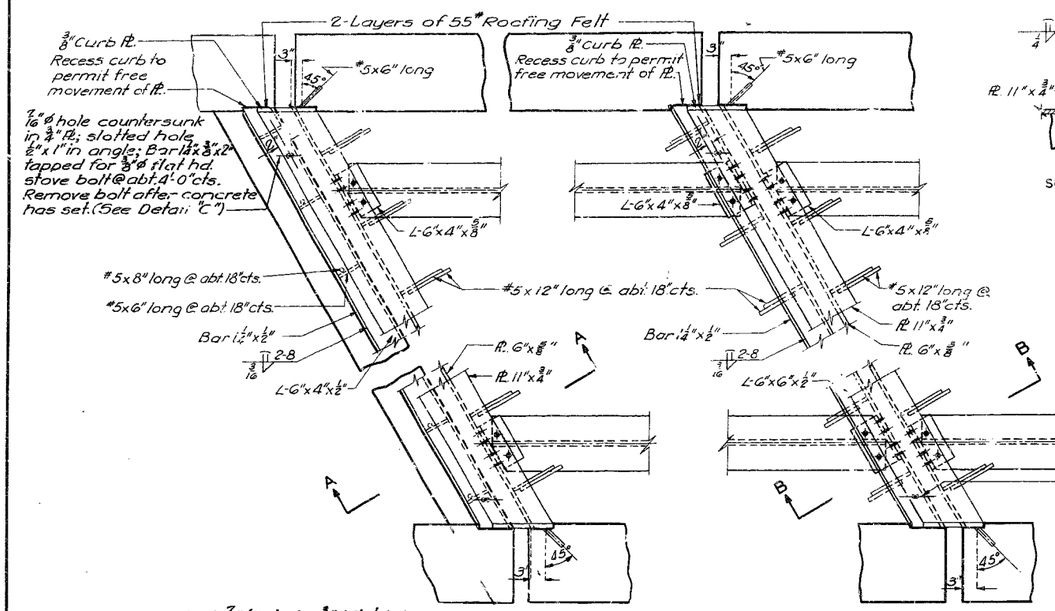

END BENT NO. 1

INTERMEDIATE BENT NO.
(Not Used)

Note: See Longitudinal Section sheet No. of for orientation of expansion device. Details shown are for Right Advance skew, Left Advance Details are similar.

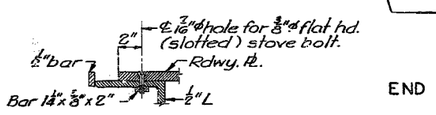

DETAIL "C"

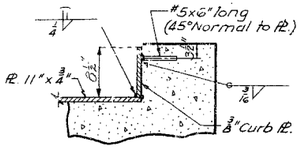

SECTION THRU CURB

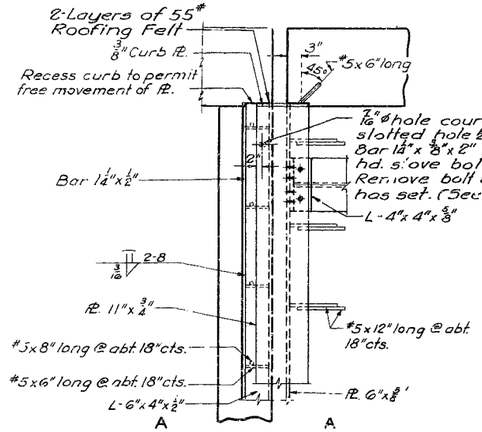

END BENT NO. 6

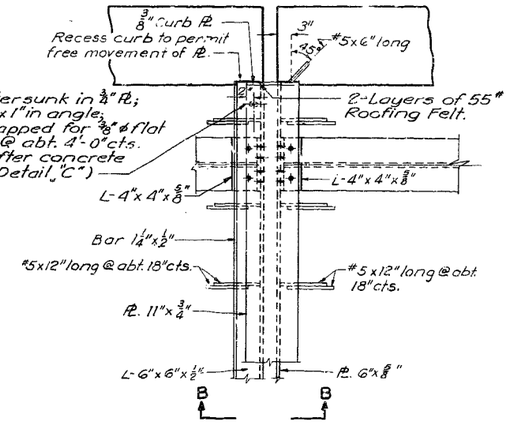

INTERMEDIATE BENT NO.
(Not Used)

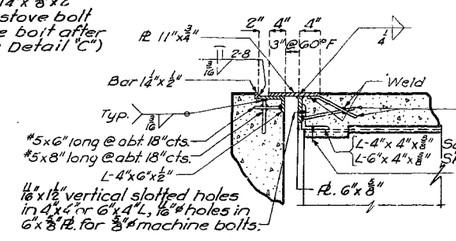

SECTION A-A

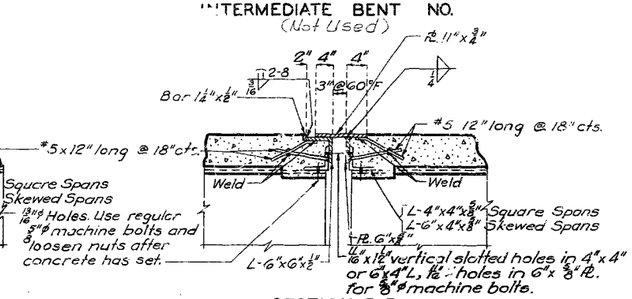

SECTION B-B

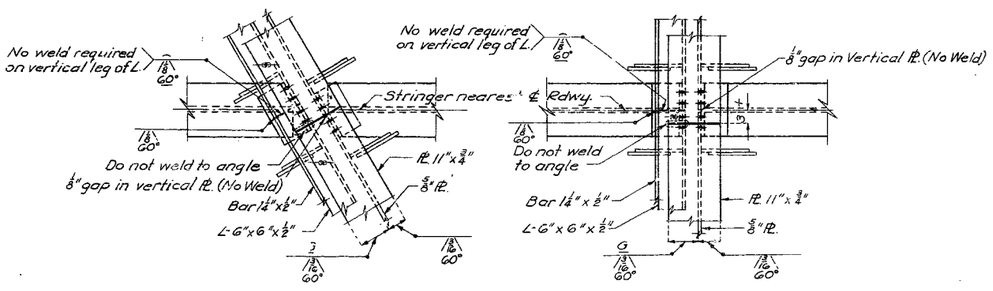

PERMISSIBLE FIELD SPLICE AT INT. BENT
(End Bent Similar)

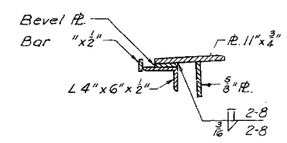

SECTION THRU EXPANSION DEVICE

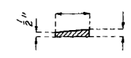

BEVEL PLATE

DETAILS OF BEVEL PLATE AT BENT NO.
(Not Used)

GENERAL NOTES:

Expansion Device shall be fabricated in one section except that when the length is over 40 foot splicing is permissible. The expansion device shall be bent to conform to crown and grade of roadway.

#5 Bars shall be structural grade. Approved stud weldea anchors may be used in lieu of #5 bars shown.

Bevel plates shall be used at end bents when the grade of the slab at the expansion device is 3.0% or more.

Use 2 Layers of 55# Roofing Felt between the sliding contact surface of curb plate and concrete backwall.

BRIDGE OVER MISSOURI PACIFIC RAILROAD

STATE ROAD - INTERSTATE ROUTE 435

ABOUT 4.5 MILES NORTH OF MARTIN CITY

PROJECT NO IG-435-1(53)(RTE.I-435) STA. 933+70 (LEFT LANE) 933+94 (RIGHT LANE)

JACKSON COUNTY

DETAILS OF PLATE EXPANSION DEVICE

BOPP & SALLER & ASSOCIATES

DETAILED OCT. 1965 BY W.C.H.

CHECKED OCT. 1965 BY A.J.S.

Note: This drawing is not to scale. Follow dimensions.

Sheet No. 15 of 16.

A-1427

80' to 200' of Exp.	Revised
No. 4.4	May 1965
Jan. 1962	

299

MISSOURI STATE HIGHWAY DEPARTMENT

FED ROAD DIST NO	STATE	FED AID PROJ NO	FISCAL YEAR	SHEET NO	TOTAL SHEETS
5	MO.		19	130	

GENERAL NOTES:

All handrail posts shall be set normal to grade.

Aluminum tube handrail shall be bent to conform to vertical and horizontal alignment of parapet.

Aluminum washer shims between top of parapet and post base may be used for adjusting handrail alignment. Maximum thickness of shims to be 1/8". Where more tilting of post is required for proper alignment, concrete bearing areas shall be ground down.

All parts of handrail, except anchor bolts, nuts, washers, and set screws are to be of aluminum material.

The contract unit price per linear foot of "Bridge Rail" shall include furnishing and erecting the handrail complete with anchor bolts, shims and Insulating compound.

All fillets 1/4" except as noted.

All drafts 3° except as noted.

Pipe rail to be fabricated in two or three panel lengths unless otherwise approved.

Omit set screw on side near filled Joint in parapet at all expansion posts.

Top of curbs and parapets to be built parallel to grade with curb and parapet joints normal to grade.

Concrete end posts to be vertical.

All exposed edges of end posts, parapets and curbs shall have 1/2" radius.

If the contractor desires, he may use drive fit cast aluminum end caps in lieu of welded aluminum closure plates.

Integrally cast test coupons and a coat of clear lacquer specified in Std. Spec. 56.2.4 and 56.3.5 respectively will not be required for these rail posts.

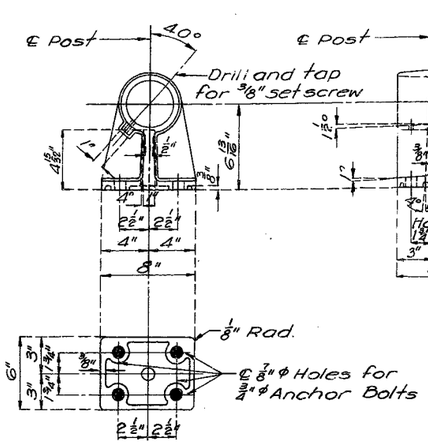

POST DETAILS

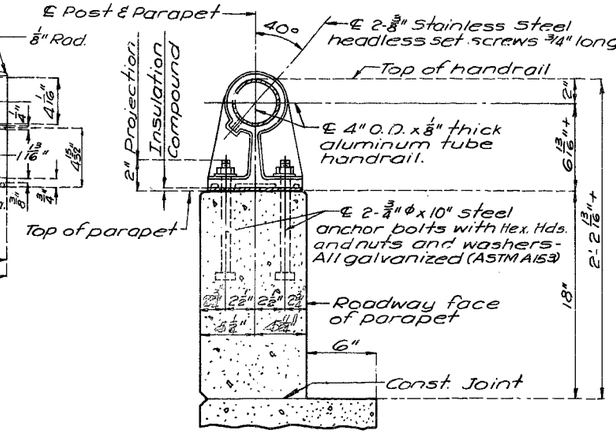

SECTION THRU HANDRAIL

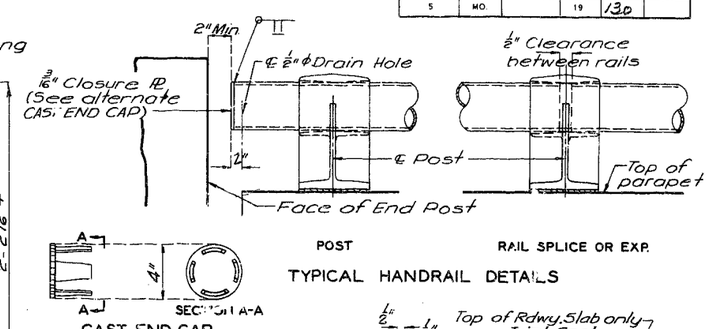

TYPICAL HANDRAIL DETAILS

SINGLE TUBE ALUMINUM RAILING

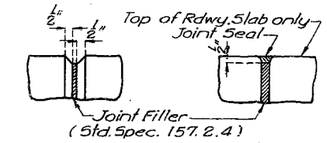

FILLED JOINT DETAILS

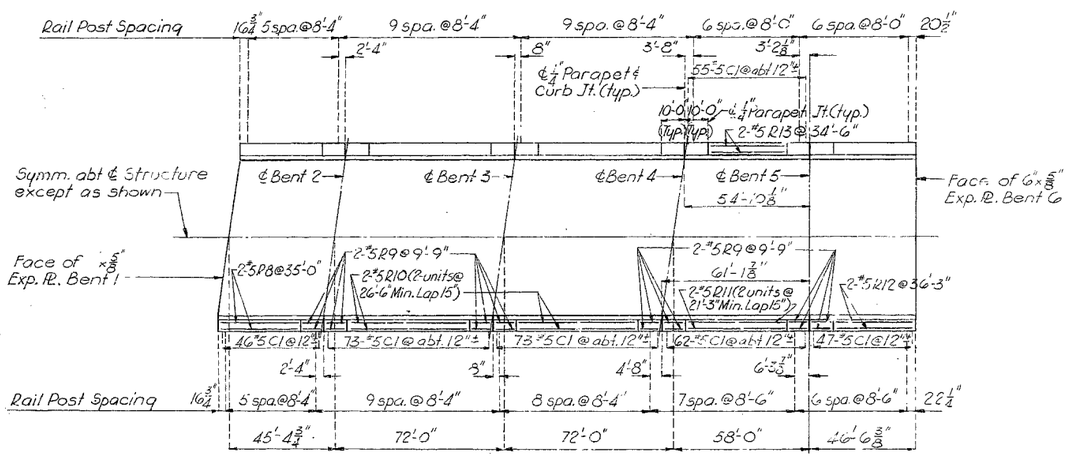

LEFT LANE

PLAN OF SLAB SHOWING RAIL POST SPACING AND PARAPET REINFORCING

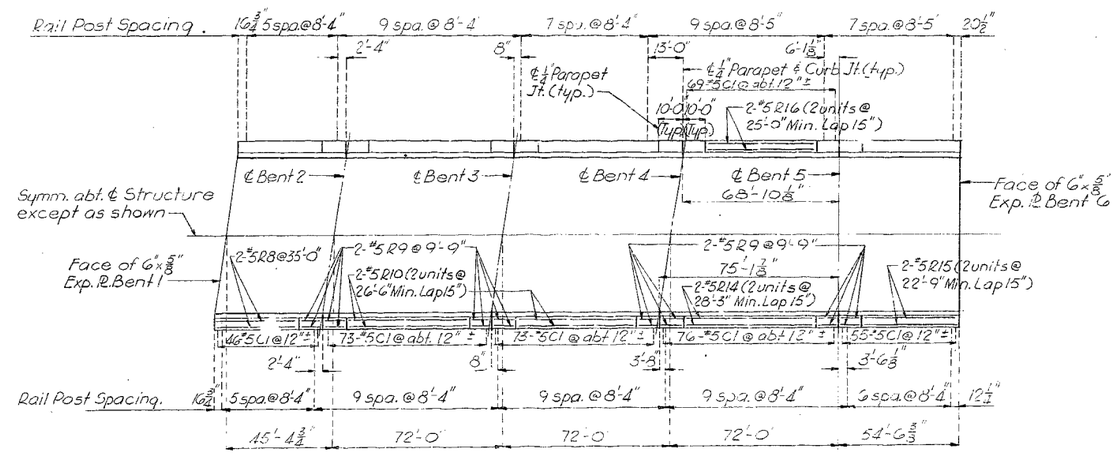

RIGHT LANE

PLAN OF SLAB SHOWING RAIL POST SPACING AND PARAPET REINFORCING

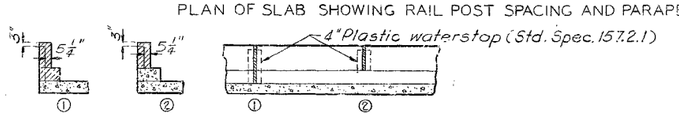

Notes: Plastic waterstop shall be placed in all parapet and curb filled joints.

Cost of plastic waterstop complete in place to be included in unit price bid for concrete.

PLASTIC WATERSTOP

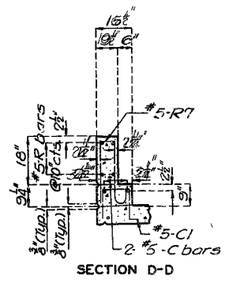

SECTION D-D

Note: For horizontal curb and parapet bars use minimum lap of 15" for #5 and 18" for #6.

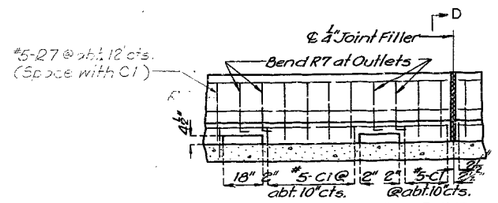

SECTION AT OUTLETS & EXP JOINT

Note: Where there are no outlets use #5-Cl @ abt. 12" cts.

BRIDGE OVER MISSOURI PACIFIC RAILROAD

STATE ROAD - INTERSTATE ROUTE 435

ABOUT 4.5 MILES NORTH OF MARTIN CITY

PROJECT NO. I-IG-435-1(53)(RTE.I-435) **STA.** 933+70.30 (LEFT LANE) 933+59.70 (RIGHT LANE)

JACKSON **COUNTY**

A-1427

No.	Revised
1.5.2	May 1965
Nov. 1965	

BOPP & SALLER & ASSOCIATES

DETAILED OCT. 1965 BY W.C.H.

CHECKED OCT. 1965 BY A.J.S.

Note: This drawing is not to scale. Follow dimensions.

Sheet No. 16 of 16.

300

MISSOURI STATE HIGHWAY DEPARTMENT

45'-72'-72'-58'-46' Cont. I-Beam (Comp.)
+2.197% Slope

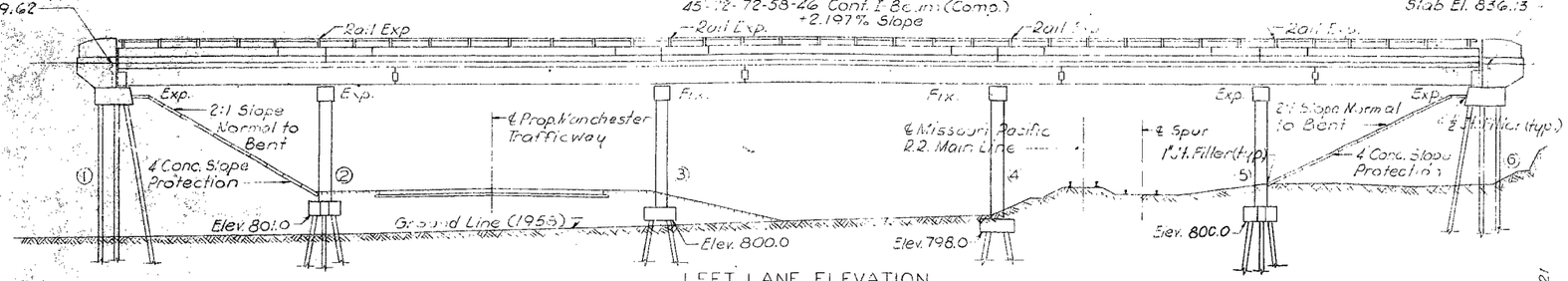

LEFT LANE ELEVATION

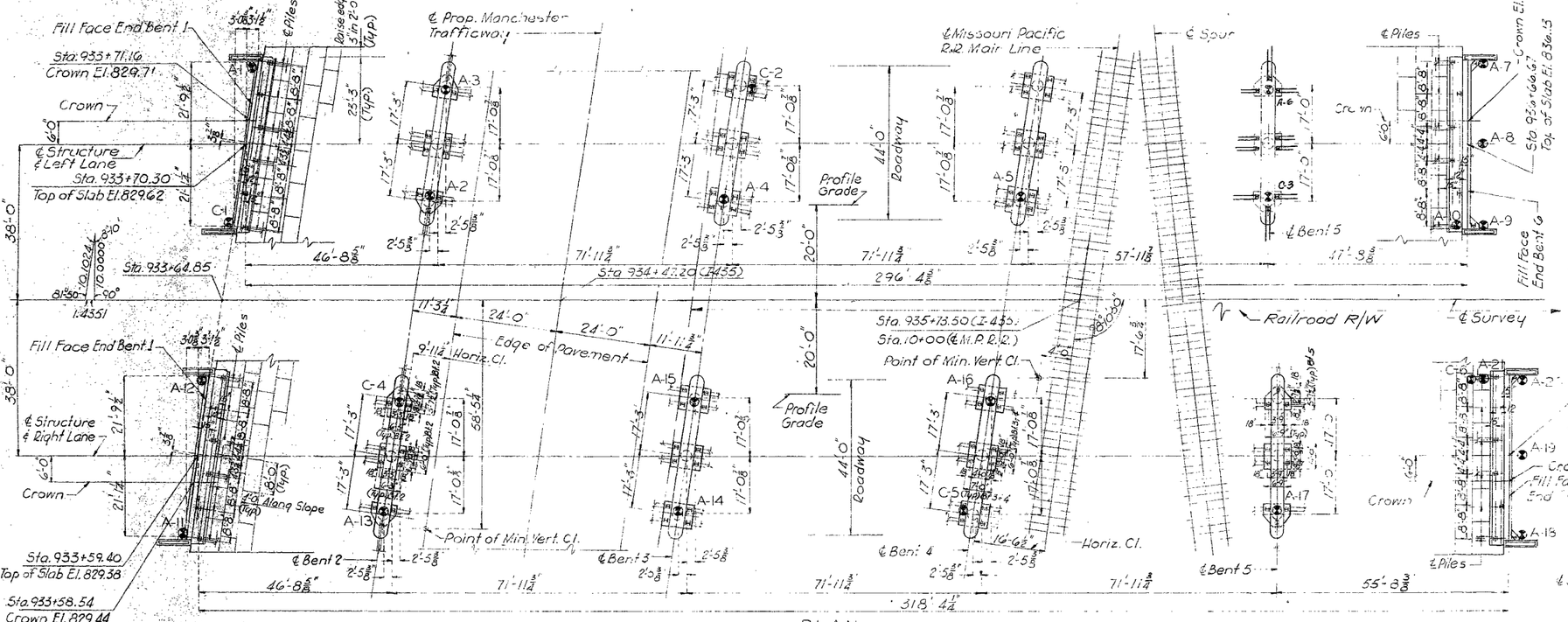

PLAN

⊗ - Indicates location of boring
For Boring Data see sht. 2 of 16.

45'-72'-72'-72'-54' Cont. I-Beam (Comp.)
+2.197% Slope

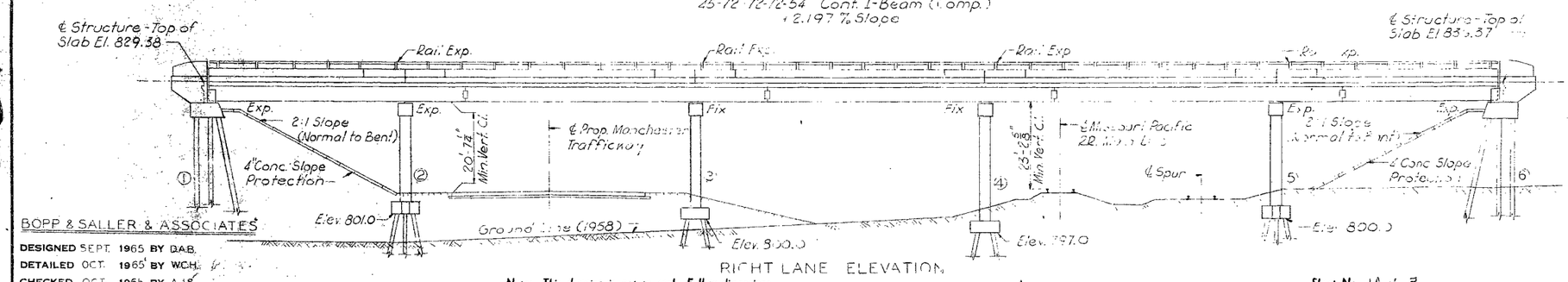

RIGHT LANE ELEVATION

Note: This drawing is not to scale. Follow dimensions.

Sheet No. 1A of 3.

BOPP & SALLER & ASSOCIATES

DESIGNED SEPT. 1965 BY D.A.B.
DETAILED OCT. 1965 BY W.C.H.
CHECKED OCT. 1965 BY A.J.S.

FINAL PLANS

FED. ROAD DIST. NO.	STATE	FED. AID PROJ. NO.	FISCAL YEAR	SHEET NO.	TOTAL SHEETS
5	MO.		19	115	

GENERAL NOTES:
Design Specifications: A.A.S.H.O. - 1961
Design Loadings: HS20-44
15 lbs./sq. ft. Future Wearing Surface
Modified 24,000# Tandem Axle
Earth: 120# Equivalent Fluid Pressure 30#
Design Unit Stresses: Class B Concrete (Substructure) fc = 1200 p.s.i.
Class B1 Concrete (Superstructure) fc = 1600 p.s.i.
Reinforcing Steel fs = 20,000 p.s.i.
Structural Steel (A.S.T.M. A36-62T) fs = 20,000 p.s.i.
Steel Pile (A.S.T.M. A36-62T) Fb = 9,000 p.s.i.
Superstructure deck surface sealed.
Paint, shop, none; field, three coats.

Field Connections, High Strength Bolts 3/4" ϕ, holes 13/16" ϕ except as noted.

A min. vert. clearance of 21'-6" from top of rails and a min. lateral clearance of 12'-6" from ℄ of tracks maintained during construction.

Notes: Compacted roadway fill for Manchester Road between the limits of State R/W. placed before any excavation or driving of steel H piles for bents. Bents.

Concrete protection on front slopes at End Bents included under road contracts. Provide 1" filler (Standard Specification 157.1.7) between slope protection and Intermediate Bents & 1/2" filler (Standard Spec. 157.1.7) between slope protection and End Bents.

Compacted roadway fill (full roadway width) placed up to elevation of bottom of concrete beam in front of and not less than 25 0" in back of End Bents before piles driven for these bents.

Steel Piles authorized in lengths greater than 65' furnished in two pieces for field splicing.

B.M.

B.M. P.K. Nail End Rt. Wing Bt. 1 Rt. Lane. Elev. 829.68

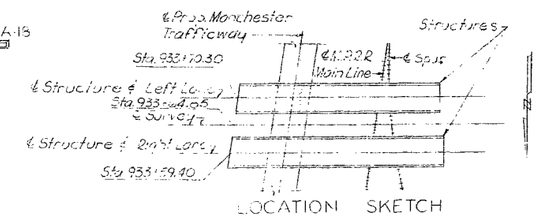

LOCATION SKETCH

BRIDGE OVER MISSOURI PACIFIC RAILROAD
STATE ROAD - INTERSTATE ROUTE 435
ABOUT 4.5 MILES NORTH OF MARTIN CITY
PROJECT NO. IG-435-1(53) RTE I-435 **STA.** 933+70.30 (LEFT LANE) 933+59.40 (RIGHT LANE)

JACKSON **COUNTY**

FINISHED
SUBMITTED BY D.B. Jordan BRIDGE ENGINEER DATE 5/20/66

FINISHED
APPROVED BY M. G. Snider CHIEF ENGINEER DATE 5/20/66

STD. 54.00
A-1427

301

FINAL PLANS

MISSOURI STATE HIGHWAY DEPARTMENT

FINAL PLANS

FED ROAD DIST NO.	STATE	FED AID PROJ. NO.	FISCAL YEAR	SHEET NO.	TOTAL SHEETS
5	MO.		19	116	

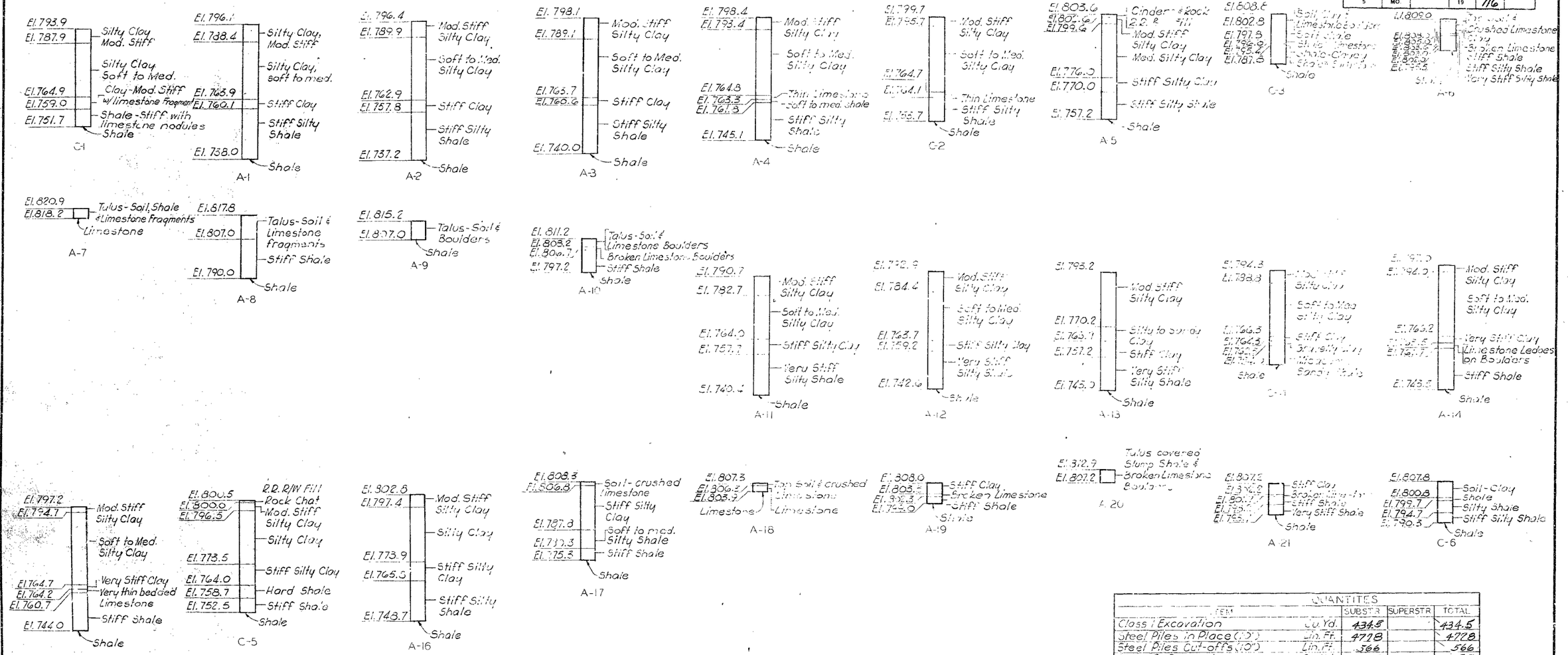

FOOTING AND PILE DATA													
BENT NO.		1 L.T.L.	2 L.T.L.	3 L.T.L.	4 L.T.L.	5 L.T.L.	6 L.T.L.	1 R.T.L.	2 R.T.L.	3 R.T.L.	4 R.T.L.	5 R.T.L.	6 R.T.L.
SPREAD FOOTING	Foundation Material												
	Design Brg. Tons/sq.ft.												
BEARING PILE	Pile Type & Size	10BP42	10BP42	10BP42	10BP42	10BP42	10BP42	10BP42	10BP42	10BP42	10BP42	10BP42	10BP42
	Number	8	10	12	12	10	8	8	10	12	12	10	8
	Approx. Length Ft.	70	50	45	35	20	35	70	50	45	40	20	35
	Design Bearing Ton	28.0	48.5	46.5	45.9	55.0	30.0	28.0	48.5	46.5	45.9	55.0	31.0
	Hammer Energy Req'd.* Ft. Lb.	8,800	10,900	10,500	10,300	12,400	7,000	8,800	10,900	10,500	10,300	12,400	7,000

Notes: *Minimum energy requirement of hammer based on plan length and design bearing value of piles. All pile driven to practical refusal at 1.9 times the design bearing value.

LOG OF SOUNDINGS

C = CORE
A = AUGER

QUANTITIES				
ITEM		SUBSTR	SUPERSTR	TOTAL
Class I Excavation	Cu. Yd.	434.5		434.5
Steel Piles in Place (10")	Lin. Ft.	4728		4728
Steel Piles Cut-offs (10")	Lin. Ft.	566		566
Class B Concrete	Cu. Yd.	425.8		425.8
Class B1 Concrete	Cu. Yd.		800.1	800.1
Reinforcing Steel	Lbs.	68,550	226,800	295,350
Painting	Tons		278.0	278.0
Bridge Rail (Single Tube Type)	Lin. Ft.		122.0	122.0
Fab. Struct. Carbon Steel	Lbs.		560,830	560,830
Cont. Items: Cl. I Exc. + 25%	Cu. Yd.	16.5		16.5
Test Holes	Lin. Ft.	20.0		20.0
Br. Anchors 6" Curb	Each		6	6

Note: No payment for excavation allowed at End Bents 1 & 6. Excavation for Bents No 2 & 3 paid for from the finished ground line.

FINISHED

BRIDGE OVER MISSOURI PACIFIC RAILROAD

STATE ROAD - INTERSTATE ROUTE 435

ABOUT 4.5 MILES NORTH OF MARTIN CITY

PROJECT NO. IG-435-1(63) PTE.I-435 **STA.** 933+70.30 (LEFT LANE) 933+59.40 (RIGHT LANE)

JACKSON **COUNTY**

FINISHED

FINISHED

A-1427

BOPP & SALLER & ASSOCIATES

DETAILED OCT. 1965 BY W.C.H.

CHECKED OCT. 1965 BY A.J.S. Jr.

Note: This drawing is not to scale. Follow dimensions.

Sheet No. 2 A o 3

FINAL PLANS

MISSOURI STATE HIGHWAY DEPARTMENT

FINAL PLANS

FED ROAD DIST NO	STATE	FED AID PROJ NO	FISCAL YEAR	SHEET NO	TOTAL SHEETS
5	MO		19	123	

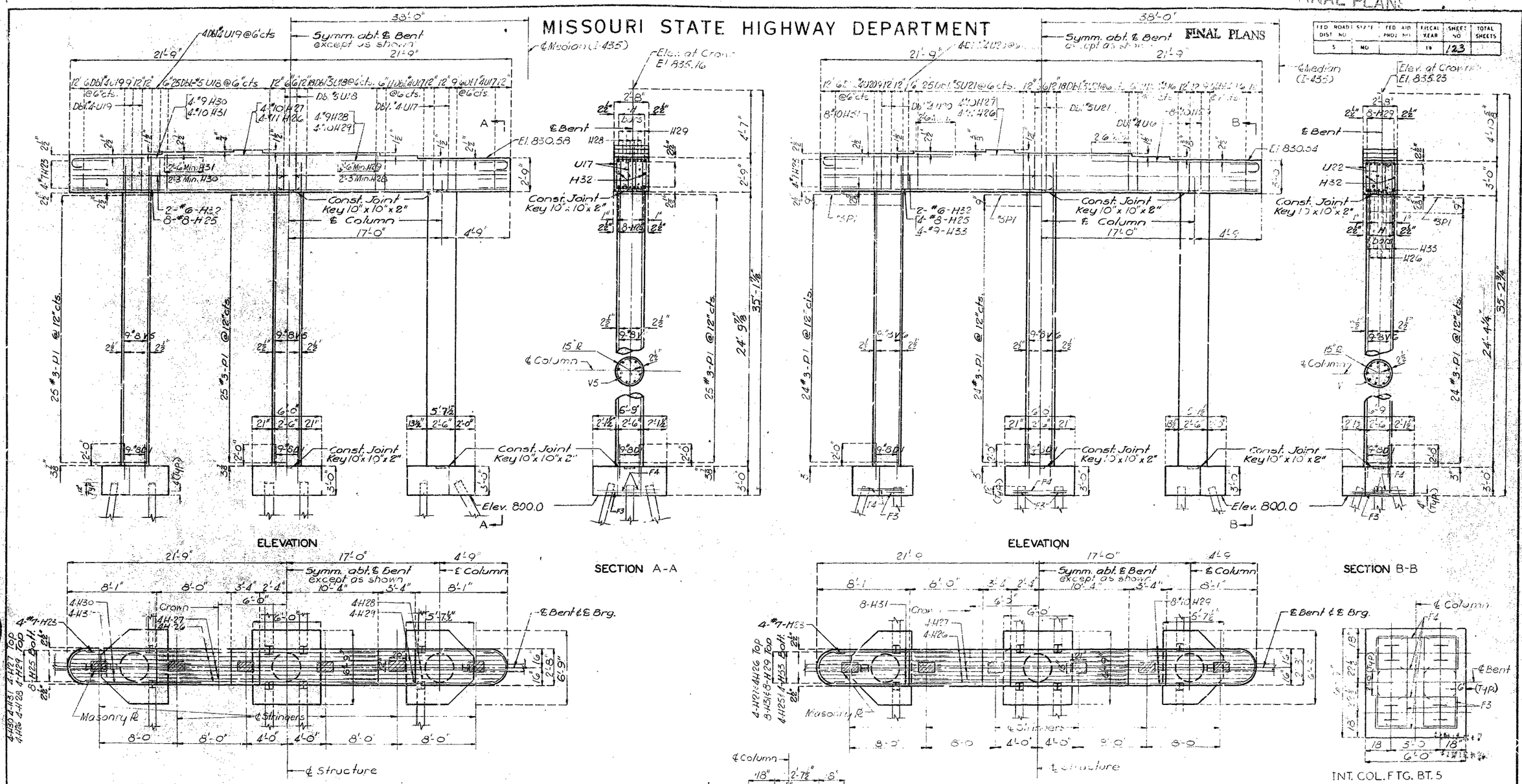

BRIDGE OVER MISSOUR PACIFIC RAILROAD

STATE ROAD INTERSTATE ROUTE 435

ABOUT 4.5 MILES NORTH OF MARTIN CITY

PROJECT NO IIG-435-1(53)(RTE. I-435) STA. 933+70.30 (LEFT LANE) 933+59.70 (RIGHT LANE)

JACKSON COUNTY

A-1427

No.	Revised
19.6	Sept. 1962
	Jan. 1965

BOPP & SALLER & ASSOCIATES

DETAILED OCT. 1965 BY W.C.H.

CHECKED OCT. 1965 BY A.J.S.

Note: This drawing is not to scale. Follow dimensions.

303

MISSOURI HIGHWAY AND TRANSPORTATION COMMISSION

STATE	PROJ NO	SHEET NO.
MO.		10
SEC/SUR 33	TWP 48N	RGE 33W

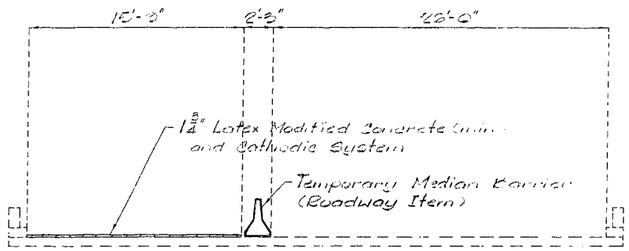

PHASE 1 - E.B.L.

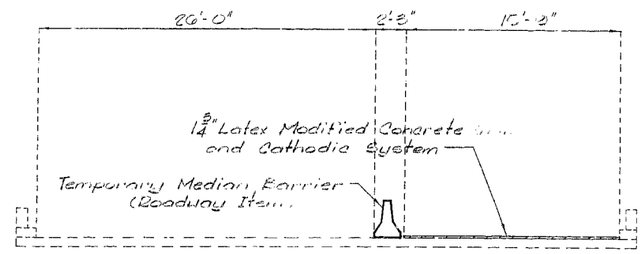

PHASE 3 - W.B.L.

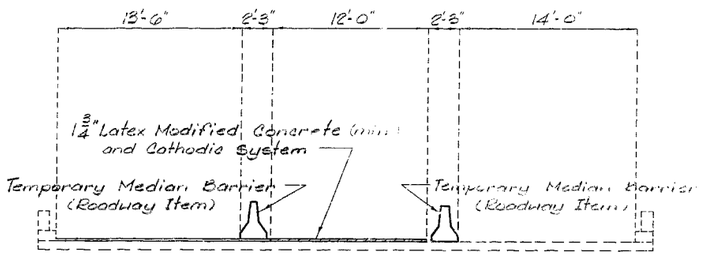

PHASE 1A - E.B.L.

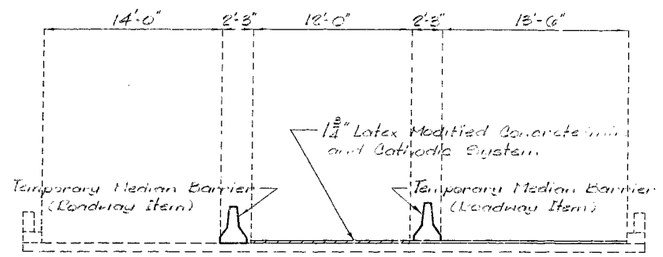

PHASE 3A - W.B.L.

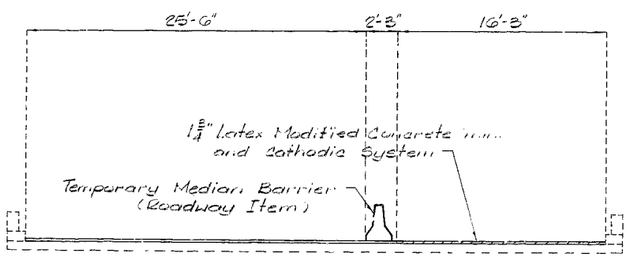

PHASE 2 - E.B.L.

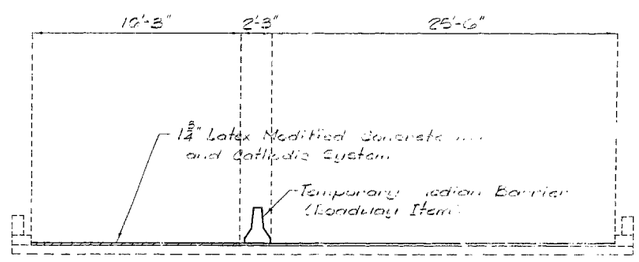

PHASE 4 - W.B.L.

GENERAL NOTES:

Design Specifications: A.A.S.H.T.O. - 1977 and Interims through 1982.

Outline of old work is indicated by light dashed lines. Heavy lines indicate new work.

Bars bonded in old concrete not removed shall be cleanly stripped and embedded into new concrete where possible.

Minimum clearance to reinforcing steel shall be 1½" unless otherwise shown.

Traffic over structure to be maintained during construction.

Design Unit Stresses:

Class B1 Concrete	f'_c = 4,000 psi
Reinforcing Steel (Grade 60)	f_y = 60,000 psi

ESTIMATED QUANTITIES

ITEM		TOTAL
Special Work	Lump Sum	1
Class B1 Concrete	Cu. Yd.	56.5
Repairing Concrete Deck (Half-Soling)	Sq. Ft.	1,330
Full Depth Repair	Sq. Ft.	266
Latex Concrete Wearing Surface	Sq. Yd.	3,005
Reinforcing Steel	Lb.	2,070
Cathodic Protection System	Lump Sum	1
Mechanical Bar Splices	Ea.	32

Note: A mechanical bar splice shall consist of one D8-S15 bar and one D1 bar, each 2'-10" long, and shall be paid for at the contract unit price, per each, for Mechanical Bar Splices.

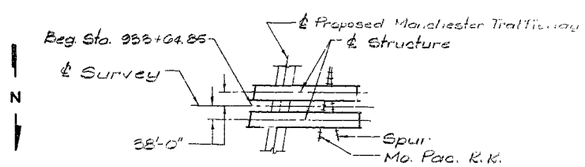

LOCATION SKETCH

DESIGNED OCT., 1984
DETAILED OCT., 1984
CHECKED NOV., 1984

Note: This drawing is not to scale. Follow dimensions.

Sheet No. 1 of 9.

REPAIRS TO:

BRIDGE OVER MISSOURI PACIFIC RAILROAD

STATE ROAD INTERSTATE ROUTE 435
IN KANSAS CITY

PROJECT NO. I-IR-IRG-435-1(149) STA. 933+64.85

JOB NO. 4-I435-442B RTE. I-435

JACKSON COUNTY

DATE Jan. 15, 1985

STD.
STD.
A-1427R

328

MISSOURI HIGHWAY AND TRANSPORTATION COMMISSION

STATE	PROJ. NO.	SHEET NO.
MO.		10
SEC./SUR. 33	TWP. 48N	RGE. 33W

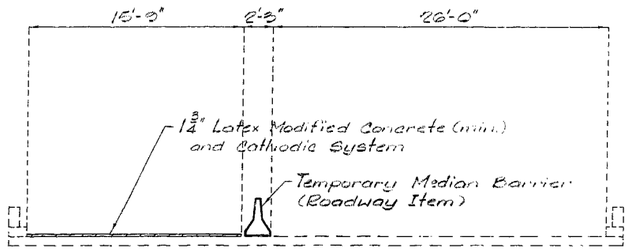

PHASE 1 - E.B.L.

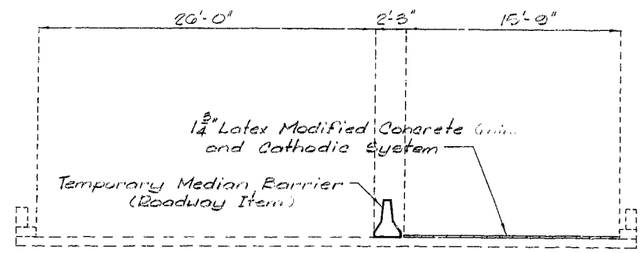

PHASE 3 - W.B.L.

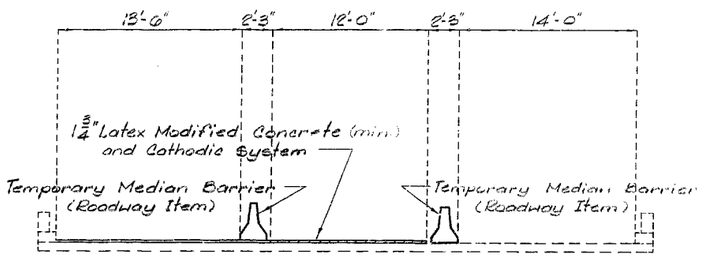

PHASE 1A - E.B.L.

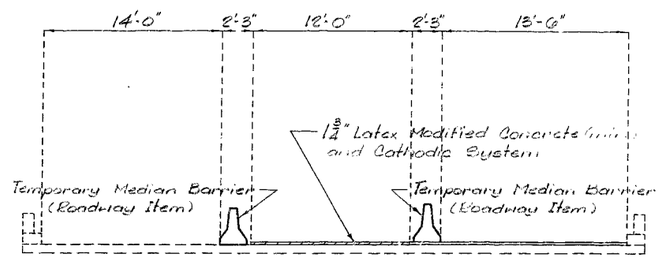

PHASE 3A - W.B.L.

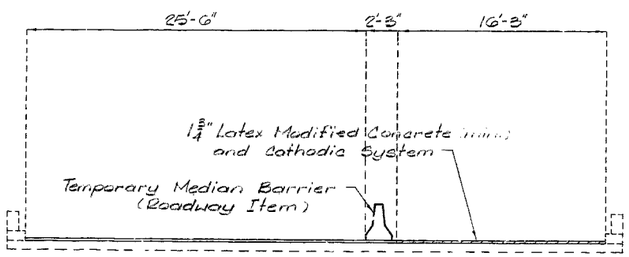

PHASE 2 - E.B.L.

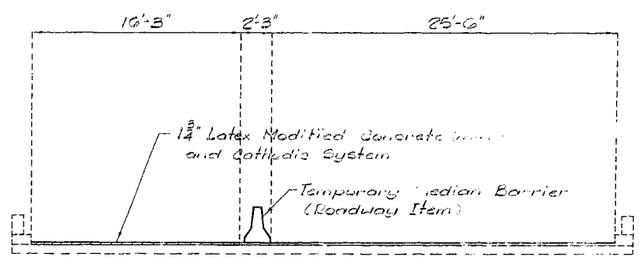

PHASE 4 - W.B.L.

GENERAL NOTES:

Design Specifications: A.A.S.H.T.O. - 1977 and Interims through 1982.

Outline of old work is indicated by light dashed lines. Heavy lines indicate new work.

Bars bonded in old concrete not removed shall be cleanly stripped and embedded into new concrete where possible.

Minimum clearance to reinforcing steel shall be 1½" unless otherwise shown.

Traffic over structure to be maintained during construction.

Design Unit Stresses:

Class B1 Concrete	f'c = 4,000 psi
Reinforcing Steel (Grade 60)	fy = 60,000 psi

ESTIMATED QUANTITIES

ITEM		TOTAL
Special Work	Lump Sum	1
Class B1 Concrete	Cu. Yd.	56.5
Repairing Concrete Deck (Half-Soling)	Sq. Ft.	1,330
Full Depth Repair	Sq. Ft.	266
Latex Concrete Wearing Surface	Sq. Yd.	3,005
Reinforcing Steel	Lb.	2,070
Cathodic Protection System	Lump Sum	1
Mechanical Bar Splices	Ea.	32

Note: A mechanical bar splice shall consist of one DB-SAE bar and one DI bar, each 2'-10" long, and shall be paid for at the contract unit price, per each, for Mechanical Bar Splices.

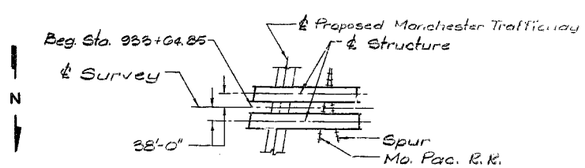

LOCATION SKETCH

DESIGNED OCT., 1984
DETAILED OCT., 1984
CHECKED NOV., 1984

Note: This drawing is not to scale. Follow dimensions.

Sheet No. 1 of 9.

REPAIRS TO:

BRIDGE OVER MISSOURI PACIFIC RAILROAD

STATE ROAD INTERSTATE ROUTE 435
IN KANSAS CITY

PROJECT NO. I-IR-IRG-435-1(149) STA. 933+64.85

JOB NO. 4-I435-442B RTE. I-435

JACKSON COUNTY

DATE Jan. 15, 1985

STD.
STD.
A-1427R

328

STATE	PROJ. NO.	SHEET NO.
MO.		11

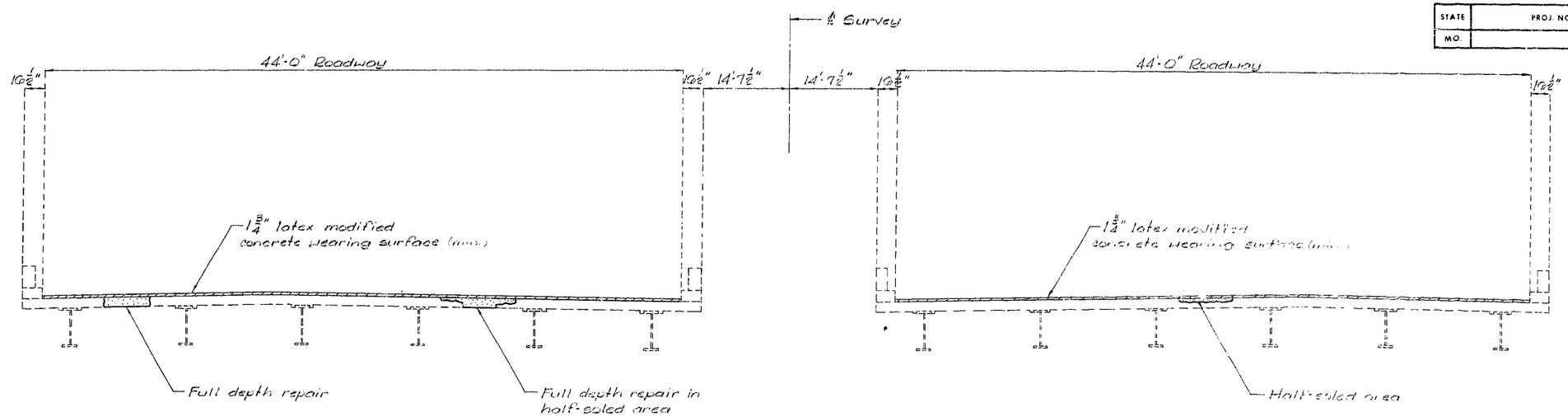

SECTION THRU SLAB

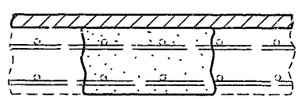

FULL DEPTH REPAIR

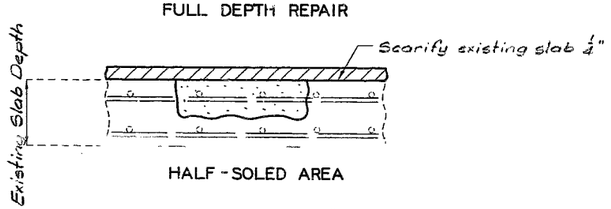

HALF-SOLED AREA

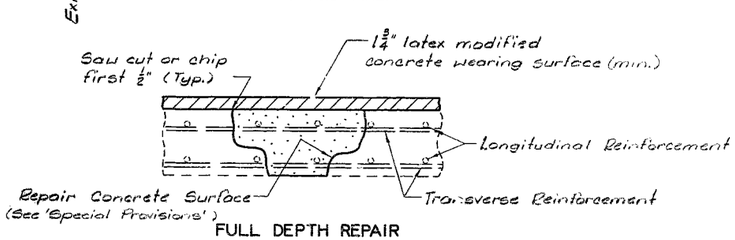

FULL DEPTH REPAIR IN HALF-SOLED AREA

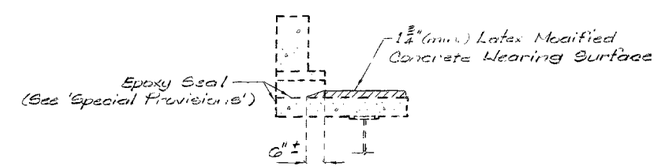

TYPICAL SECTION AT CURB SHOWING OUTLETS

329

DETAILED OCT., 1984
CHECKED NOV., 1984

Note: This drawing is not to scale. Follow dimensions.

Sheet No. 2 of 9

JACKSON COUNTY

A-1427R

STATE	PROJ NO	SHEET NO
MO		12

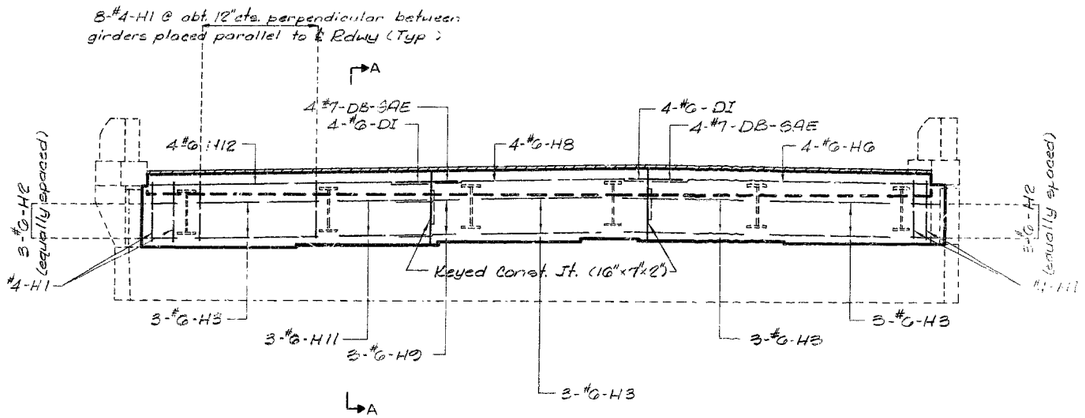

ELEVATION

(Lt. Lane shown - Rt. Lane similar by opposite hand)

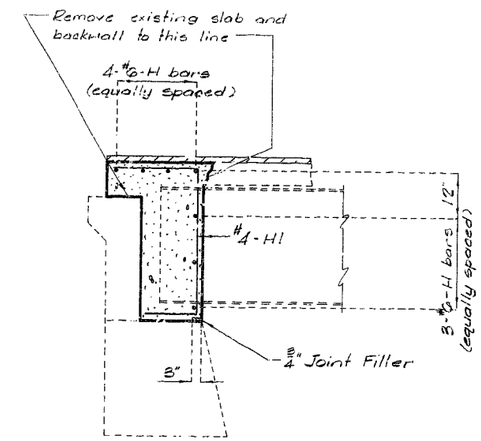

SECTION A-A

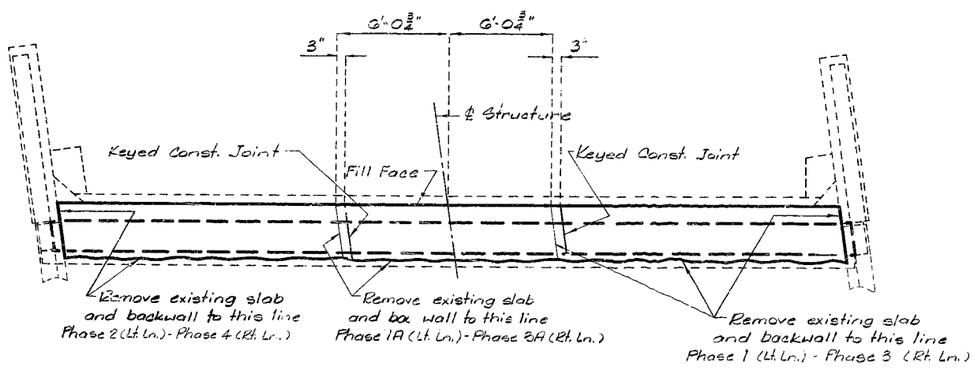

PLAN AT TOP OF SLAB

(Lt. Lane shown - Rt. Lane similar by opposite hand)

'DB-SAE' designates dowel bars which shall have mechanical splices at ends adjacent to the next pour.

'DI' designates dowel bars which shall be inserted into the mechanical splices of DB-SAE bars.

DB-SAE and DI bar splices shall be equal to Richmond Screw Anchor Co., Inc.

DB-SAE and DI bars shall be bent in field as required to maintain a minimum concrete cover of 1½".

330

DETAILS OF END BENT NO. 1

DETAILED NOV., 1984
CHECKED NOV., 1984

Note: This drawing is not to scale. Follow dimensions.

Sheet No. 3 of 9

JACKSON COUNTY

A-1427R

STATE	FROJ NO.	SHEET NO.
MO.		13

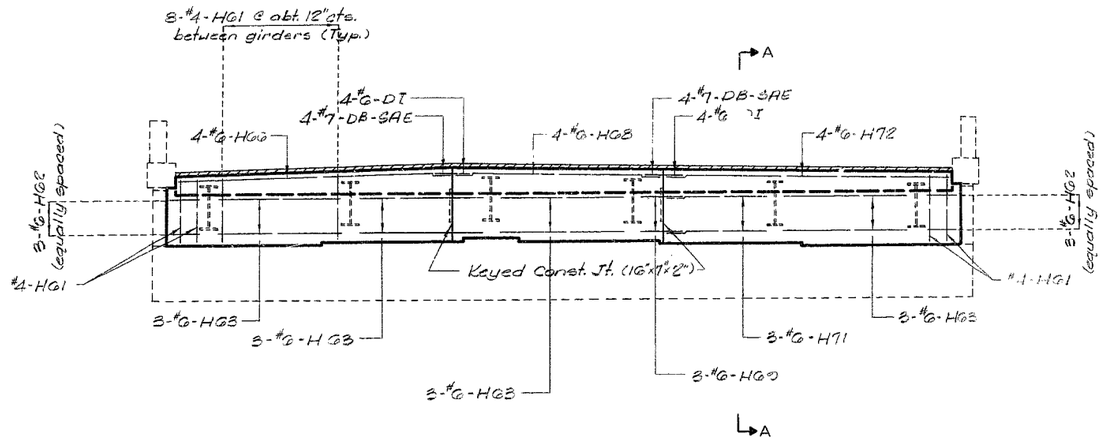

ELEVATION

(Lt. Lane shown - Rt. Lane similar by opposite hand)

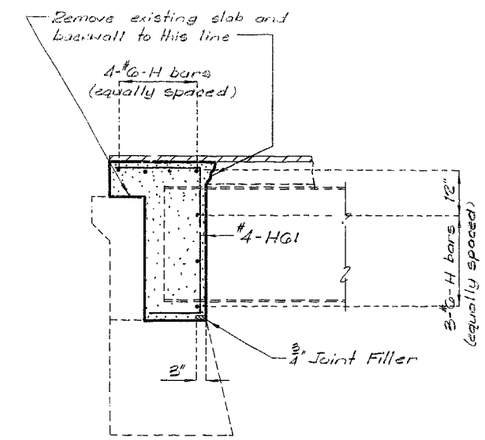

SECTION A-A

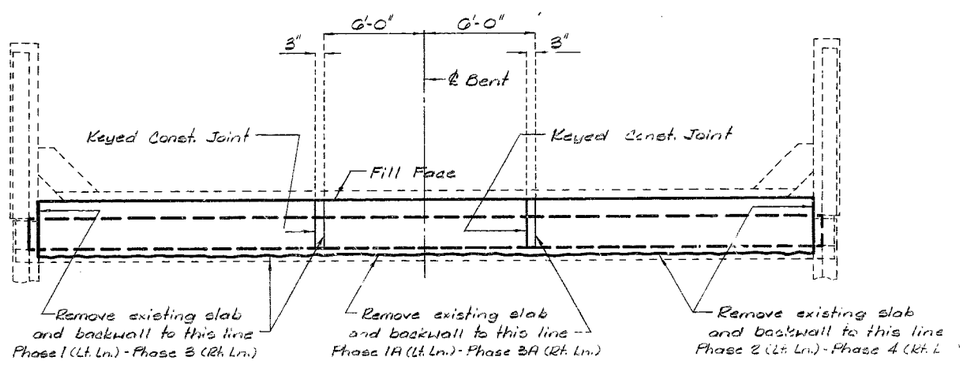

PLAN AT TOP OF SLAB

(Lt. Lane shown - Rt. Lane similar by opposite hand)

'DB-SAE' designates dowel bars which shall have mechanical splices at ends adjacent to the next pour.

'DI' designates dowel bars which shall be inserted into the mechanical splices of DB-SAE bars.

DB-SAE and DI bar splices shall be equal to Richmond Screw Anchor Co., Inc.

331

DETAILS OF END BENT NO. 6

DETAILED NOV., 1984
CHECKED NOV., 1984

Note: This drawing is not to scale. Follow dimensions.

JACKSON COUNTY

A-1427R

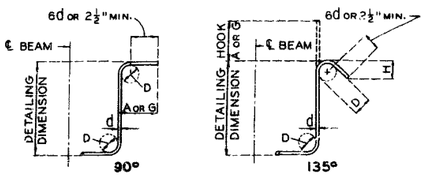

STIRRUP HOOK DIMENSIONS				
GRADES 40-50-60 KSI				
BAR SIZE	D (IN.)	90° HOOK	135° HOOK	
		HOOK A OR G	HOOK A OR G	APPROX. H
#3	1-1/2"	4"	4"	2-1/2"
#4	2"	4-1/2"	4-1/2"	3"
#5	2-1/2"	6"	5-1/2"	3-3/4"
#6	4-1/2"	8"	7"	4-1/2"

NOTE: UNLESS OTHERWISE NOTED DIAMETER "D" IS THE SAME FOR ALL BENDS AND HOOKS ON A BAR.

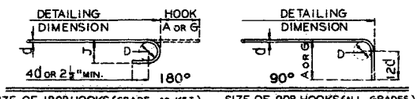

SIZE OF 180° HOOKS (GRADE 40 KSI)

D = 5d FOR #3 THRU #11
D = 10d FOR #14 AND #18

SIZE OF 90° HOOKS (ALL GRADES) AND 180° HOOKS (GRADE 60 KSI)

D = 6d FOR #3 THRU #8
D = 8d FOR #9, #10 AND #11
D = 10d FOR #14 AND #18

END HOOK DIMENSIONS					
BAR SIZE	180° HOOKS				90° HOOKS
	GRADE 40		GRADE 60		ALL GRADES
	A OR G	J	A OR G	J	A OR G
#3	5"	2-3/4"	5"	3"	6"
#4	6"	3-1/2"	6"	4"	8"
#5	7"	4-1/2"	7"	5"	10"
#6	8"	5-1/4"	8"	6"	12"
#7	9"	6-1/4"	10"	7"	14"
#8	10"	7"	11"	8"	16"
#9	12"	8"	15"	11-1/4"	19"
#10	13"	9"	17"	12-3/4"	22"
#11	14"	10"	19"	14-1/4"	21-0"
#14	21-2"	20-1/2"	21-2"	20-1/2"	21-7"

NOTES:

ALL STANDARD HOOKS AND BENDS OTHER THAN 180 DEG. TO BE BENT WITH SAME PROCEDURE AS FOR 90 DEG. STD. HOOKS.
HOOKS AND BENDS SHALL BE IN ACCORDANCE WITH THE PROCEDURES AS SHOWN ON THIS SHEET.
E - EPOXY COATED REINFORCEMENT.
S - STIRRUP.
X - BAR IS INCLUDED IN SUBSTRUCTURE QUANTITIES.
V - BAR DIMENSIONS VARY IN EQUAL INCREMENTS BETWEEN DIMENSIONS SHOWN ON THIS LINE AND THE FOLLOWING LINE.
NO. EA. - NUMBER OF BARS OF EACH LENGTH.
NOMINAL LENGTHS - ARE BASED ON OUT TO OUT DIMENSIONS SHOWN IN BENDING DIAGRAMS AND ARE LISTED FOR FABRICATORS USE. (NEAREST INCH)
ACTUAL LENGTHS - ARE MEASURED ALONG CENTERLINE BAR TO THE NEAREST INCH.
PAYWEIGHTS ARE BASED ON ACTUAL LENGTHS.

COMPLETE BILL OF REINFORCING STEEL

NO. REQD.	MARK NO. SIZE	MARK	LOCATION	EPOXY (E)	SHAPE NO.	STIRRUP (S)	SUBSTR. (X)	VARIES (V)	NO. EACH	DIMENSIONS B FT. IN.	C FT. IN.	D FT. IN.	E FT. IN.	F FT. IN.	H FT. IN.	K FT. IN.	NOMINAL LENGTH FT. IN.	ACTUAL LENGTH FT. IN.	WEIGHT LBS.
			END BENT NO. 1																
88	4	H1	DIAPH		11	S					2 6.250	3 9.000	18.125				7 9	7 7	446
12	6	H2	DIAPH		20					22.000							22	22	33
24	6	H3	DIAPH		20					6 11.000							6 11	6 1	249
8	6	H6	DIAPH		20					15 7.000							15 7	15 7	187
8	6	H8	DIAPH		20					11 10.000							11 10	11 10	142
6	6	H9	DIAPH		20					4 0.000							4 0	4 0	36
6	6	H11	DIAPH		20					5 7.000							5 7	5 7	50
8	6	H12	DIAPH		20					16 2.000							16 2	16 2	194
			END BENT NO. 6																
88	4	H61	DIAPH		11	S					2 6.000	3 10.000	17.000				7 9	7 7	446
12	6	H62	DIAPH		20					21.000							21	21	32
24	6	H63	DIAPH		20					6 10.000							6 10	6 10	246
8	6	H66	DIAPH		20					15 6.000							15 6	15 6	186
8	6	H68	DIAPH		20					11 9.000							11 9	11 9	141
6	6	H69	DIAPH		20					4 0.000							4 0	4 0	36
6	6	H71	DIAPH		20					5 6.000							5 6	5 6	50
8	6	H72	DIAPH		20					16 0.000							16 0	16 0	192
			END OF BAR LIST																

STATE	PROJ NO	SHEET NO
MO		14

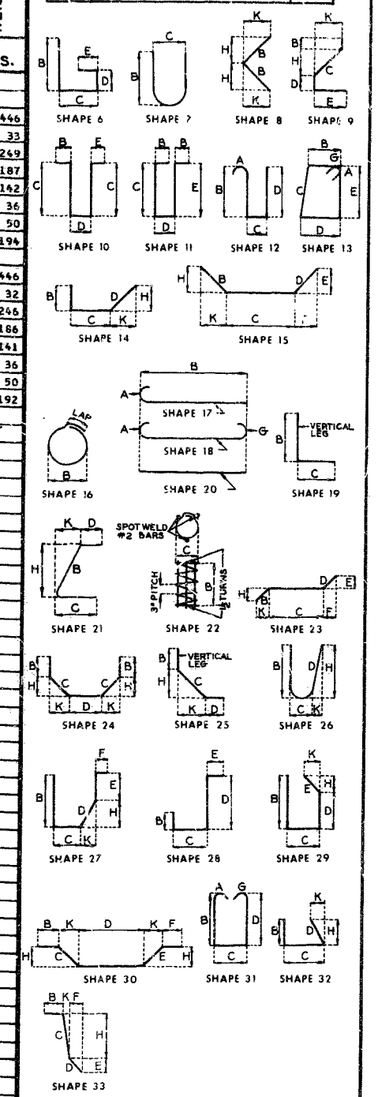

BENDING DIAGRAMS

332

STD. 90.8.5	REVISED
MAY 1974	MAY 1984

DETAILED DEC., 1984
CHECKED DEC., 1984

Note: This drawing is not to scale. Follow dimensions.

Sheet No. 5 *of* 9

JACKSON COUNTY

A-1427R

STATE	HOI NO	SHEET NO.
MO		5

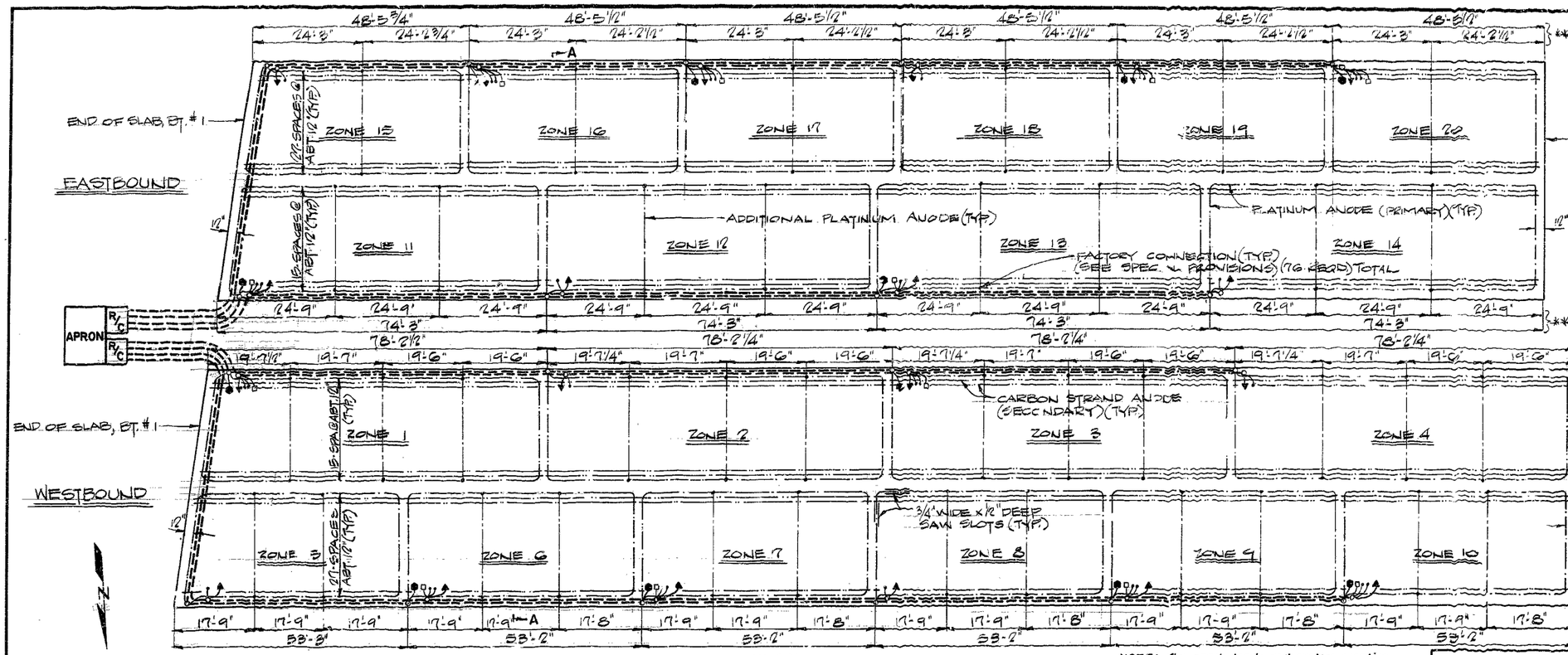

PLAN

** NOTE: DIMENSIONS ARE ALONG INSIDE FACE OF CURB. ACTUAL ANODE LENGTHS (PRIMARY AND SECONDARY) ARE THE RESPONSIBILITY OF THE CONTRACTOR.

NOTE: The anode leads and system negative return leads shall be routed in the same conduit. The reference cell, reference cell ground leads, rebar probe and probe ground leads shall be routed in the same conduit. Reference cells are to be placed between anodes. Reference cell ground shall be welded to rap rebar within one foot of reference cell. All zones are similar with varying widths (see Section A-A). Anode assembly number must match zone number.

ESTIMATED QUANTITIES *		
ITEM	UNIT	QUANTITY
Primary Anodes	Lin. Ft.	4100
Secondary Anode Strands	Lin. Ft.	24,100
Reference Cells	Each	10
Rebar Probes	Each	10
Thermite Welds	Each	104***
Conduit 2" ϕ P.V.C.	Lin. Ft.	2400

* For information only.
Note: Primary anodes, secondary anode strands and conduit lengths are approximate. Actual lengths are the responsibility of the contractor.

*** NOTE: SEE SHEET NO. 7 FOR LOCATION OF GROUNDS.

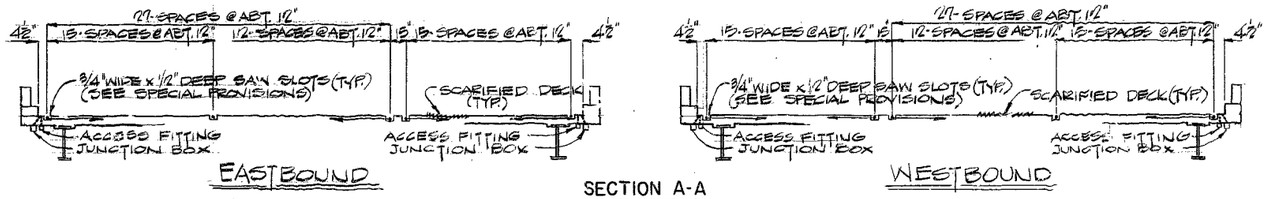

SECTION A-A

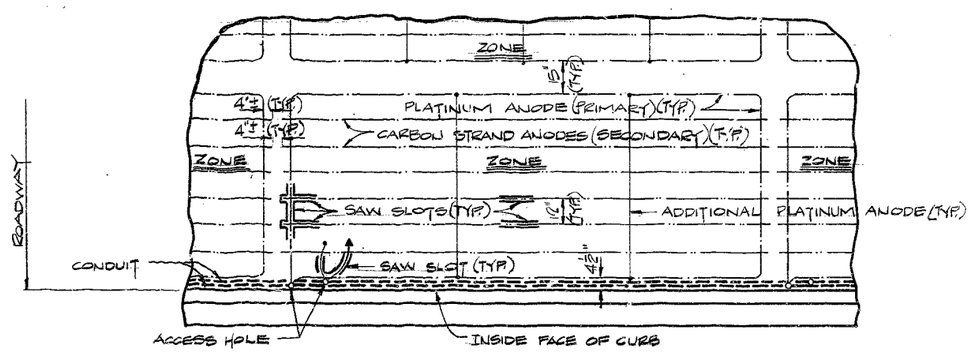

TYPICAL ZONE LAYOUT EXCEPT AS NOTED

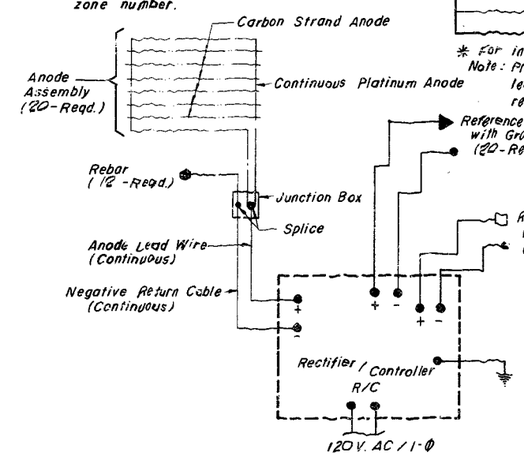

PARTIAL SCHEMATIC

DENOTATIONS

- Platinum Anode
- Carbon Strand Anode
- System Negatives Connection
- Reference Cell
- Rebar Probe (Corrosometer)
- Grounds
- Conduit

Note: Primary and secondary anode strands shall be placed as shown with a placement tolerance of plus or minus three inches.

CATHODIC PROTECTION SYSTEM

DETAILED DEC. 1984
CHECKED DEC. 1984

Note: This drawing is not to scale. Follow dimensions.

Sheet No. 6 of 9

JACKSON COUNTY

A-1427R

333

AF 33910P

STATE	PROJ NO.	SHEET NO.
MO.		16

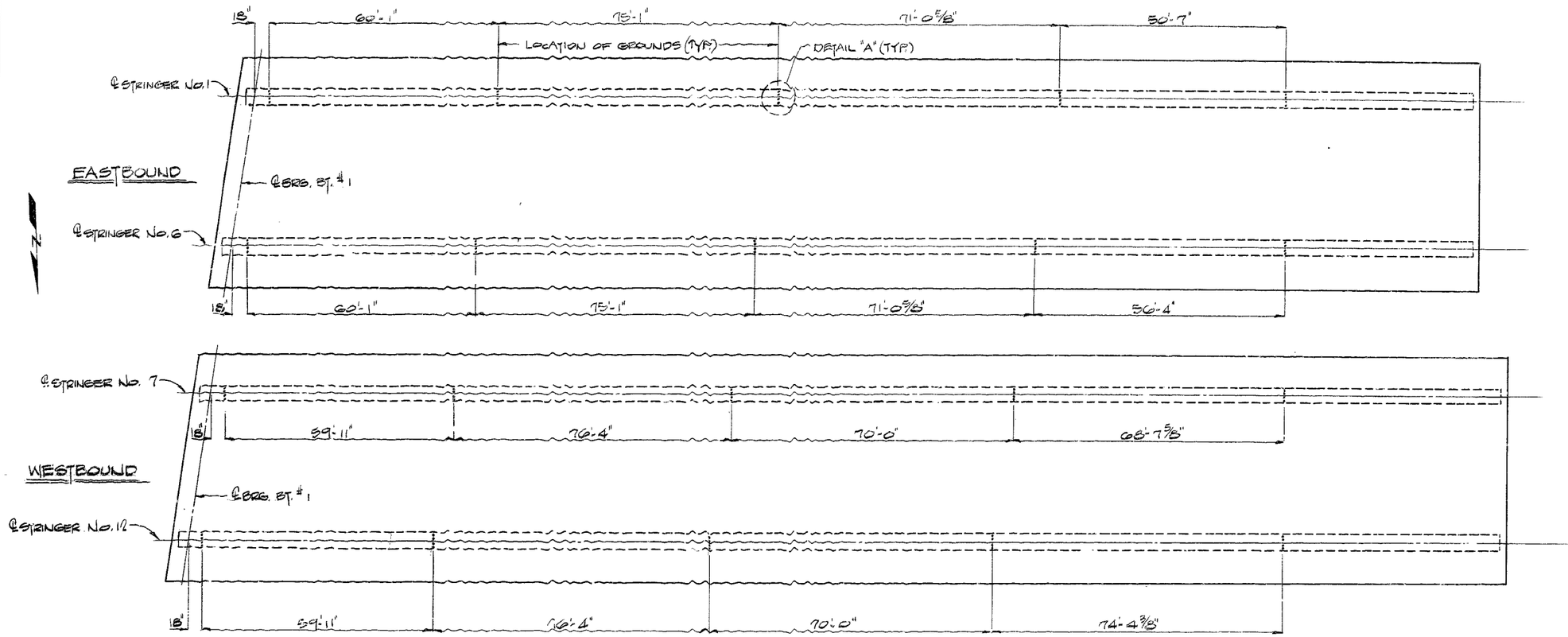

PLAN SHOWING LOCATION OF GROUNDS

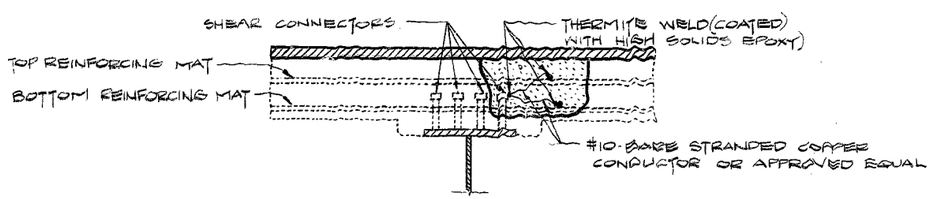

DETAIL "A"

NOTE: GROUNDING LOCATIONS MAY BE SHIFTED A MAXIMUM OF 5'-0" LONGITUDINALLY TO COINCIDE WITH A DECK REPAIR AREA.

334

DETAILED DEC. 1984
CHECKED DEC. 1984

Note: This drawing is not to scale. Follow dimensions.

JACKSON COUNTY

A-1427R

STATE	PROJ NO	SHEET NO
MO		17

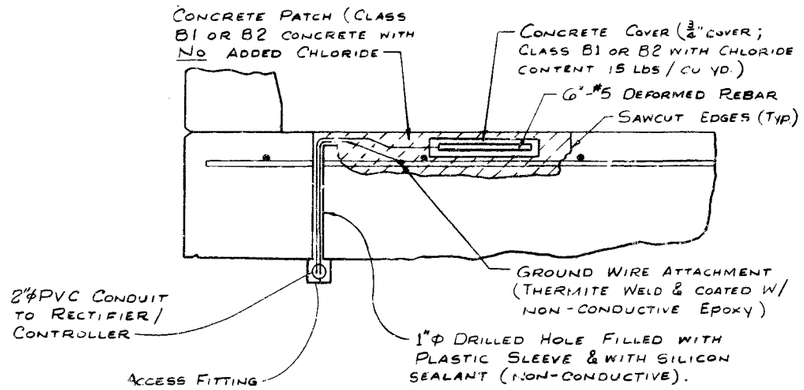

REBAR PROBE DETAILS

Note: The Reference Cell shall be placed in the excavated area within 1" but not in direct contact of Top-Mat Reinforcing Steel.

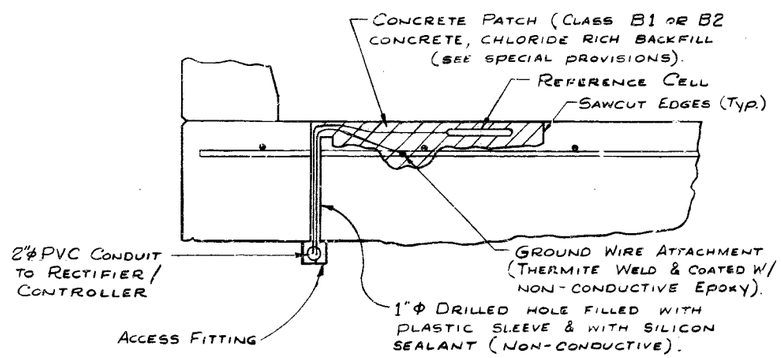

REFERENCE CELL DETAILS

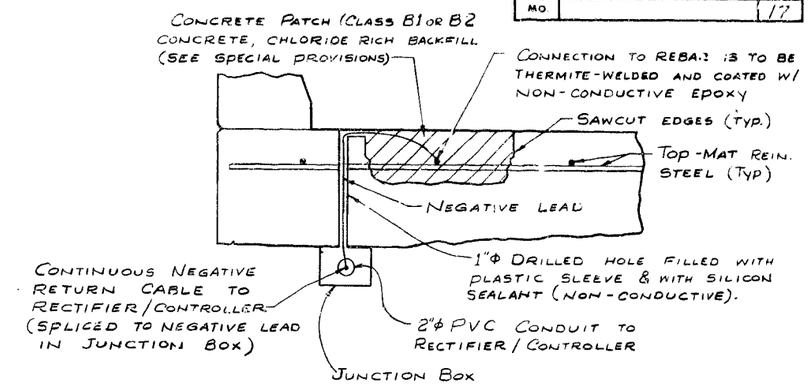

SYSTEM NEGATIVES CONNECTION DETAIL

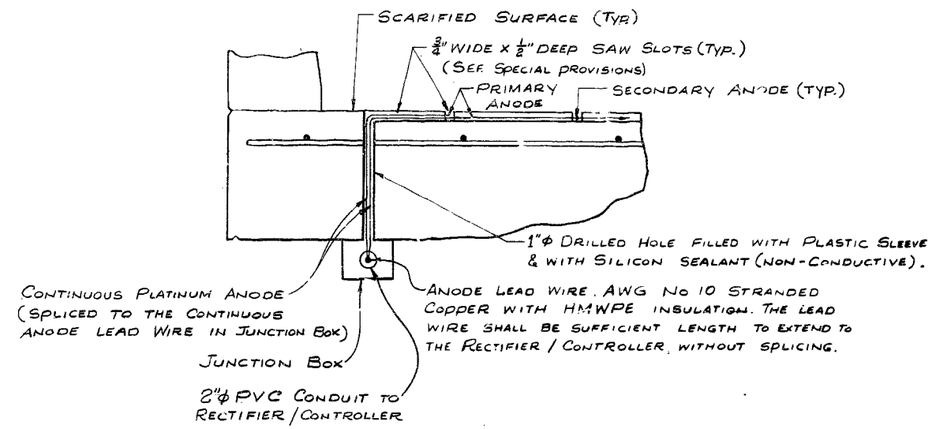

PRIMARY ANODE TO ANODE LEAD WIRE DETAIL

Note: All concrete removal shall be initiated by saw cutting the first 1/2".

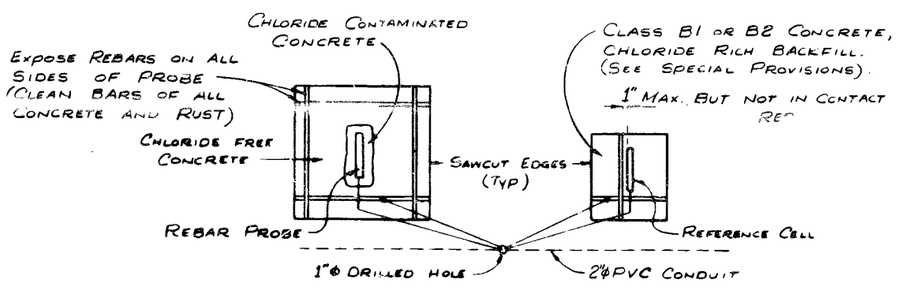

PLAN OF REBAR PROBE AND REFERENCE CELL

Notes: Conduit shall be schedule 40 Heavy Wall PVC (Polyvinyl Chloride Plastic). Each section of conduit shall bear the Underwriters Laboratories, Inc. (UL) label.
Conduit shall be secured to concrete with clamps at abt. 5'-0" c/s.
Weepholes shall be provided at appropriate locations to drain any moisture in the conduit lines.
The location and direction of conduit may be shifted to meet field conditions as approved by the engineer.
Use expansion couplings and access fittings where appropriate.
The junction boxes shall be PVC molded, surface mounted, size 6"x6"x4". They shall be equal to "Carlon" Electrical Construction Products or "Triangle" Conduit & Cable Co. Inc. The conduit terminations and cover shall be of water tight construction.

335

DETAILED DEC. 1984
CHECKED DEC. 1984

Note: This drawing is not to scale. Follow dimensions.

JACKSON COUNTY

A-1427R

STATE	PROJ NO	SHEET NO
MO		18

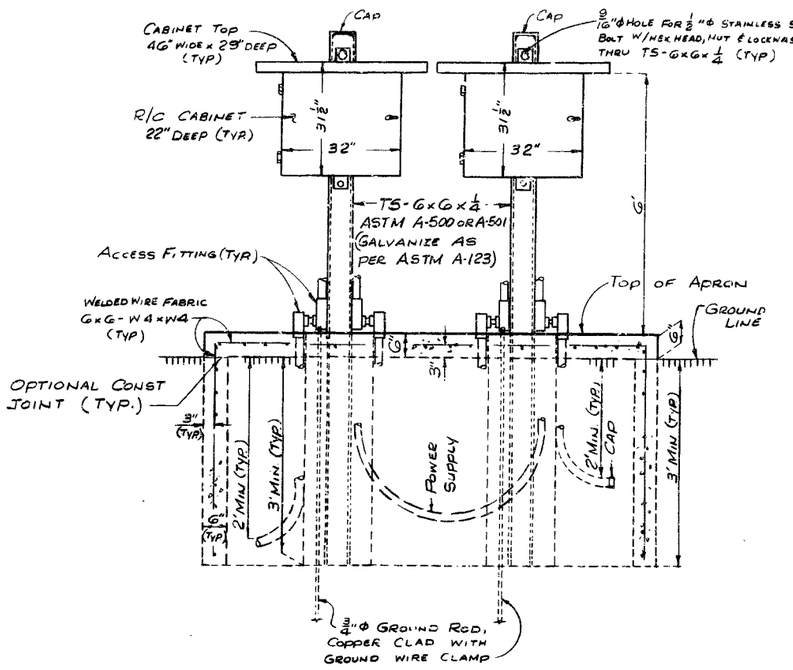

SECTION A-A

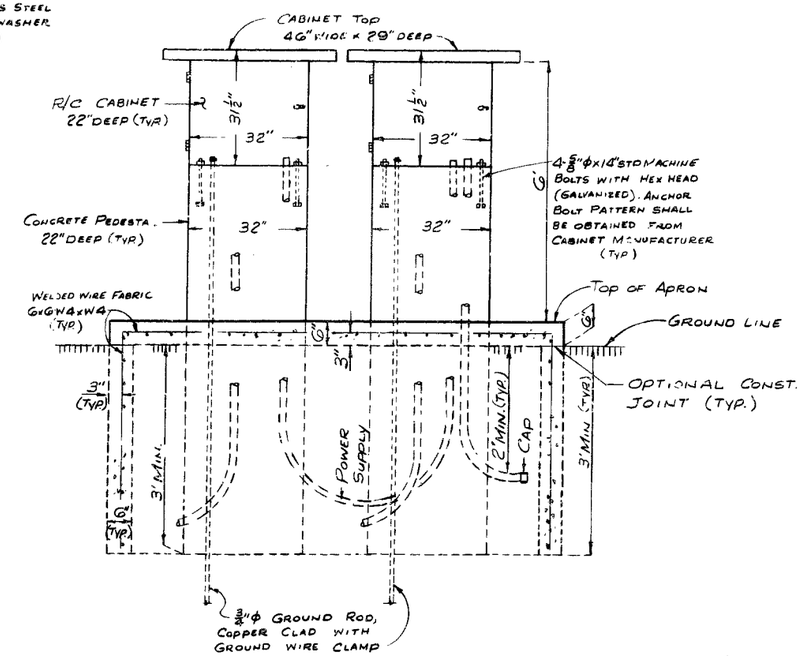

SECTION B-B

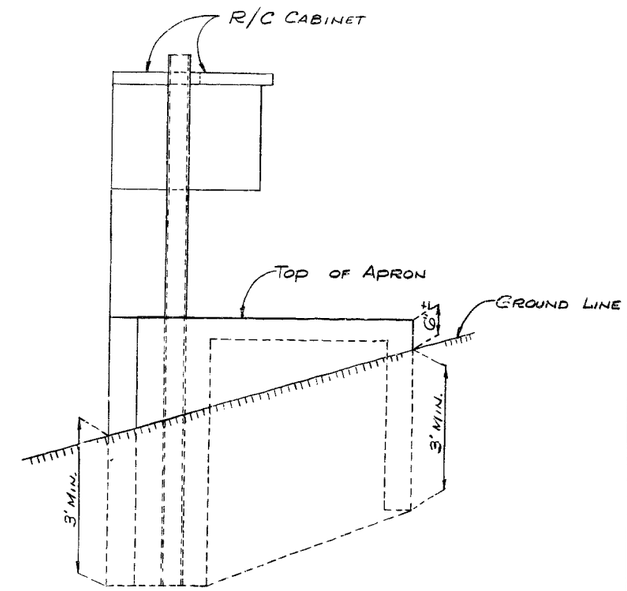

ELEVATION C-C

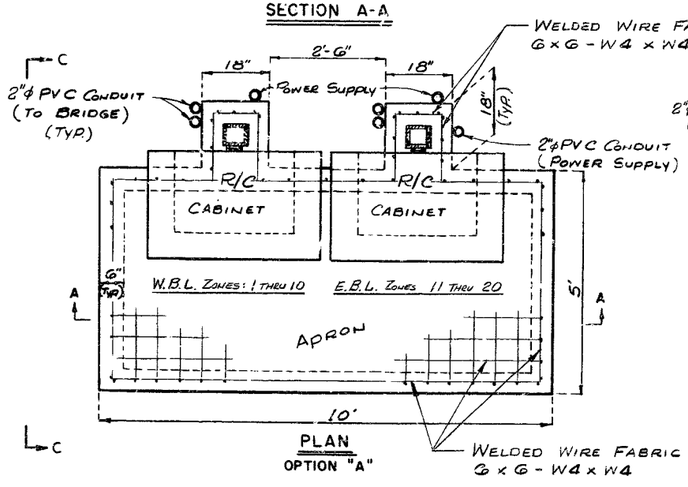

PLAN
OPTION "A"

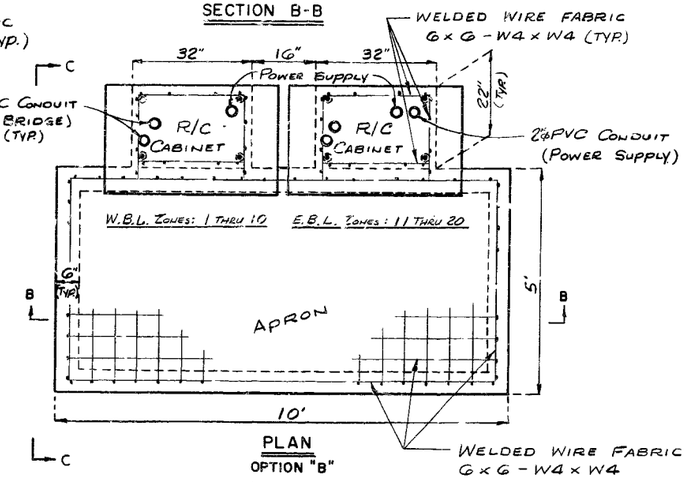

PLAN
OPTION "B"

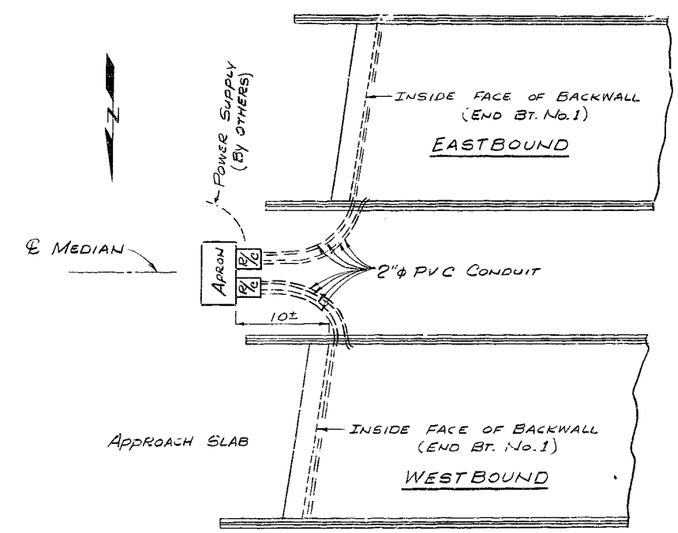

PLAN LOCATION OF RECTIFIER/CONTROLLER

Note: The 3/4"Φ ground rods shall be sufficient length to extend a minimum of 10'-0" below bottom of concrete pedestal.
Ground wire shall be No. 6 AWG minimum.
Knockouts or drilled holes shall be provided in cabinets for all conduit. Locations of such are the responsibility of the contractor and cabinet manufacturer.

DETAILED DEC. 1984
CHECKED DEC. 1984

Note: This drawing is not to scale. Follow dimensions.

Sheet No. 9 *of* 9

JACKSON COUNTY

A-1427R

336

MISSOURI HIGHWAY AND TRANSPORTATION COMMISSION

FINAL PLANS

STATE	PROJ. NO.	SHEET NO.
MO.		10
SEC./SUR. 33	TWP. 48N	RGE. 33W

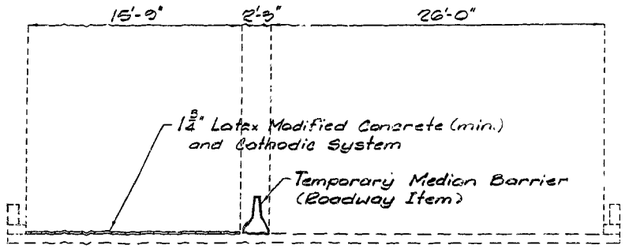

PHASE 1 - E.B.L.

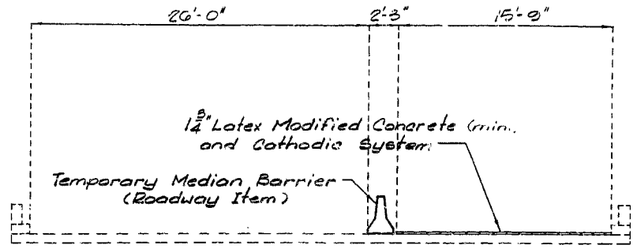

PHASE 3 - W.B.L.

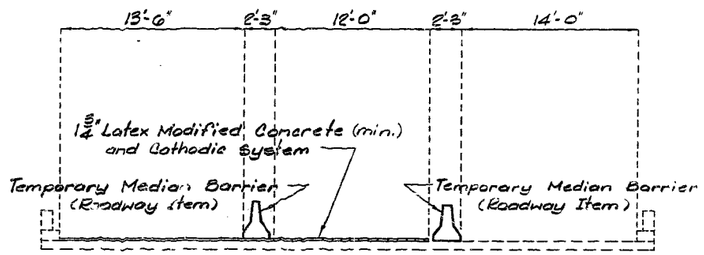

PHASE 1A - E.B.L.

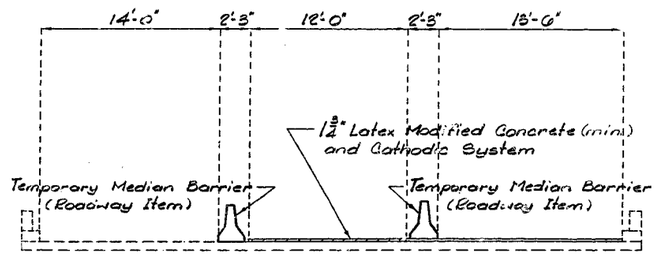

PHASE 3A - W.B.L.

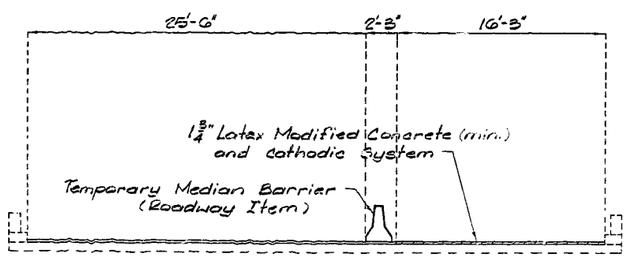

PHASE 2 - E.B.L.

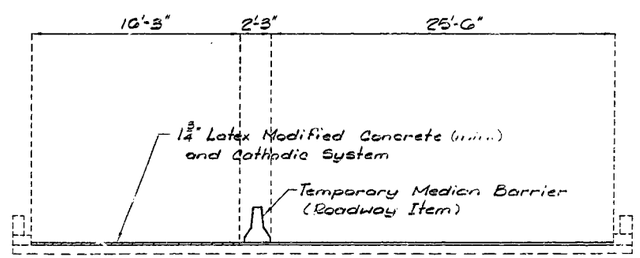

PHASE 4 - W.B.L.

GENERAL NOTES:

Design Specifications: A.A.S.H.T.O. - 1977 and Interims through 1982.

Outline of old work is indicated by light dashed lines. Heavy lines indicate new work.

Bars bonded in old concrete not removed are cleanly stripped and embedded into new concrete where possible.

Minimum clearance to reinforcing steel is $1\frac{1}{2}$" unless otherwise shown.

Traffic over structure was maintained during construction.

Design Unit Stresses:

Class B1 Concrete	f'c = 4,000 psi
Reinforcing Steel (Grade 60)	fy = 60,000 psi

ESTIMATED QUANTITIES

ITEM		TOTAL
Special Work	Lump Sum	1
Class B1 Concrete	Cu. Yd.	50.5
Repairing Concrete Deck (Half-Soling)	Sq. Ft.	849
Full Depth Repair	Sq. Ft.	142
Latex Concrete Wearing Surface	Sq. Yd.	3,005
Reinforcing Steel	Lb.	2,670
Cathodic Protection System	Lump Sum	1
Mechanical Bar Splices	Ea.	32

Note: A mechanical bar splice shall consist of one DB-SAE bar and one D[illegible] bar, each 2'-10" long, and shall be paid for at the contract unit price, per each, for Mechanical Bar Splices.

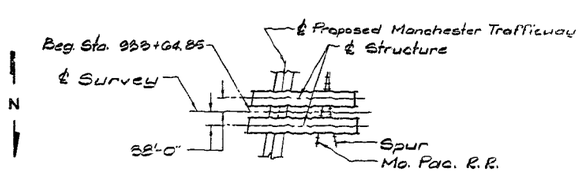

LOCATION SKETCH

DESIGNED OCT., 1984
DETAILED OCT., 1984
CHECKED NOV., 1984

Note: This drawing is not to scale. Follow dimensions.

Sheet No. 1A of 9.

REPAIRS TO:

BRIDGE OVER MISSOURI PACIFIC RAILROAD

STATE ROAD INTERSTATE ROUTE 435

IN KANSAS CITY

PROJECT NO. I-IR-IRG-435-1(149) STA. 933+64.85

JOB NO. 4-1435-442B RTE. I-435

JACKSON COUNTY

DATE Jan. 15, 1985

STD.
STD.
A-1427R

337

MISSOURI HIGHWAY AND TRANSPORTATION COMMISSION

STATE	PROJ. NO.	SHEET NO.
MO.		215
SEC./SUR. 33 TWP. 48N RGE. 3W		

WIDEN (45'-72'-72'-58'-46')EASTBOUND LANE, (45'-72'-72'-72'-54')WESTBOUND LANE CONTINUOUS COMPOSITE I-BEAM
+2.197% GRADE

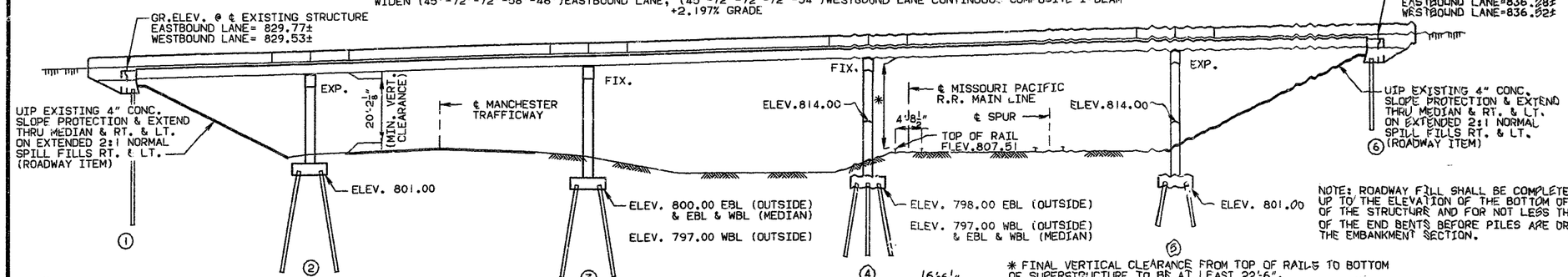

NOTE: ROADWAY FILL SHALL BE COMPLETED TO THE FINAL ROADWAY SECTION AND UP TO THE ELEVATION OF THE BOTTOM OF THE CONCRETE BEAM WITHIN THE LIMITS OF THE STRUCTURE AND FOR NOT LESS THAN 25' IN BACK OF THE FILL FACE OF THE END BENTS BEFORE PILES ARE DRIVEN FOR ANY BENTS FALLING WITHIN THE EMBANKMENT SECTION.

* FINAL VERTICAL CLEARANCE FROM TOP OF RAILS TO BOTTOM OF SUPERSTRUCTURE TO BE AT LEAST 22'-6".

ELEVATION

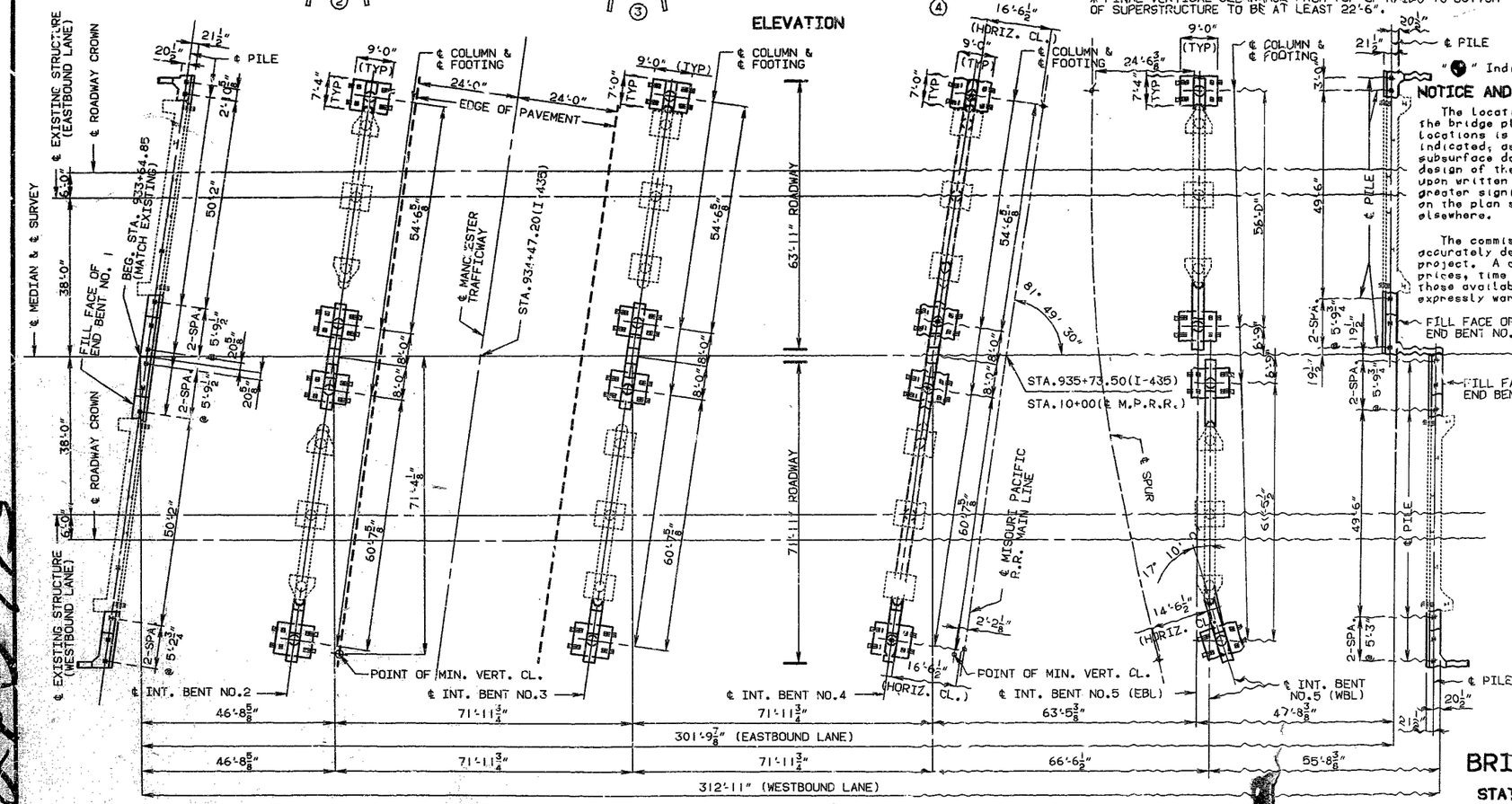

PLAN

NOTE: USE EXISTING BORING DATA AS SHOWN ON PLANS FOR EXISTING BRIDGE A-1427.

"●" Indicates location of Borings.

NOTICE AND DISCLAIMER REGARDING BORING LOG DATA

The locations of all subsurface boring for this structure are shown on the bridge plan sheet for this structure. Boring data for the numbered locations is shown on sheet no. 2. The boring data for all locations indicated, as well as any other boring logs or other factual records of subsurface data and investigations performed by the department for the design of the project, is available from the district materials engineer upon written request as outlined in the project special provisions. No greater significance or weight should be given to the boring data depicted on the plan sheets than to subsurface data available from the district or elsewhere.

The commission does not represent or warrant that any such boring data accurately depicts the conditions to be encountered in constructing this project. A contractor assumes all risks it may encounter in basing its bid prices, time or schedule of performance on the boring data depicted here or those available from the district, or on any other documentation not expressly warranted, which the contractor may obtain from the commission.

NOTE: FOR GENERAL NOTES, PILE DATA AND ESTIMATED QUANTITIES, SEE SHEET NO. 2.

B.M. #1427 SPIKE IN END RT. WING
RT. LANE BENT #1 @ STA. 933+50±
ELEV. 829.68

T.B.M. 1/90 PAINTED □ ON N.W. COR.
N.W. BR. CURB E.B.L. BR.
ELEV 836.81

BRIDGE OVER MISSOURI PACIFIC R.R.

STATE ROAD FROM KANSAS STATE LINE TO RTE. 71
ABOUT 4.5 MILES NORTH OF MARTIN CITY

PROJECT NO. STA. 933+64.85 AT ℄ MEDIAN
JOB NO. J410807 RTE. I-435

JACKSON COUNTY

DATE 3/1/94

STD. 611.6
STD. 706.35
A-1427R1

DESIGNED AUG. 1992
DETAILED APR. 1993
CHECKED APR. 1993

NOTE: THIS DRAWING IS NOT TO SCALE. FOLLOW DIMENSIONS.

SHEET 11 OF 63.

249 153

STATE	PROJ. NO.	SHEET NO.
MO.		

ESTIMATED QUANTITIES

ITEM		SUBSTR.	SUPERSTR.	TOTAL
CURB REMOVAL (BRIDGES) **	LIN.FT.		1,300	1,300
PARTIAL REMOVAL OF SUBSTRUCTURE CONCRETE	LUMP SUM	1		1
PARTIAL REMOVAL OF EXISTING BRIDGE DECK	SQ.FT.		1,678	1,678
CLASS 1 EXCAVATION	CU.YD.	645		645
TEMPORARY SHORING	LUMP SUM	1		1
STRUCTURAL STEEL PILES (10")	LIN.FT.	3,498		3,498
CLASS B CONCRETE (SUBSTRUCTURE)	CU.YD.	657.0		657.0
SLAB ON STEEL	SQ.YD.		1,833	1,833
SAFETY BARRIER CURB (16") *	LIN.FT.		1,282	1,282
MODIFIED LATEX CONCRETE WEARING SURFACE	SQ.YD.		1,651	1,651
LAMINATED NEOPRENE BEARING PADS (TAPERED)	EACH		14	14
PREFORMED COMPRESSION EXPANSION JT. SEAL (3.5 IN.)	LIN.FT.		14	14
REINFORCING STEEL (BRIDGES)	LB.	52 730		52,730
CATHODIC PROTECTION SYSTEM	LUMP SUM		1	1
FABRICATED STRUCTURAL CARBON STEEL (I-BEAM)	LB.		60,060	60,060
FABRICATED STRUCTURAL LOW ALLOY STEEL(I-BEAM) A572	LB.		318,370	318,370
SLAB DRAINS	EACH		34	34
REPAINTING (SYSTEM E) GRAY	LUMP SUM		1	1
EXISTING DIAPHRAGM CONNECTIONS TO FLANGE	LUMP SUM		1	1
TRANSPORTING LEAD CONTAMINATED RESIDUE	LUMP SUM			1
AMOUNT OF LEAD CONTAMINATED RESIDUE	TONS			

* SAFETY BARRIER CURB SHALL BE CAST-IN-PLACE OPTION OR SLIP-FORM OPTION.

** INCLUDES ALUMINUM RAIL REMOVAL. RAILING NOT TO BE SALVAGED FOR THE STATE.

NOTE: ALL REINFORCEMENT IN THE END BENTS IS INCLUDED IN THE SUPERSTRUCTURE QUANTITIES.

ALL CONCRETE ABOVE THE LOWER CONSTRUCTION JOINT IN END BENTS IS INCLUDED IN THE ESTIMATED SUPERSTRUCTURE QUANTITIES FOR SLAB ON STEEL, SEE SPECIAL PROVISIONS.

THE COST OF FURNISHING, FABRICATING AND INSTALLING NEOPRENE BEARING PADS COMPLETE-IN-PLACE, WILL BE PAID FOR AT THE CONTRACT UNIT PRICE FOR LAMINATED NEOPRENE BEARING PADS PER EACH

ESTIMATED QUANTITIES FOR SLAB ON STEEL

ITEM		TOTAL
REINFORCING STEEL (PLAIN)	LB.	114,560
CONCRETE	CU.YD.	422.0

3 115,600

NOTE: THE TABLE OF ESTIMATED QUANTITIES FOR SLAB ON STEEL REPRESENTS THE QUANTITIES USED BY THE STATE IN PREPARING THE COST ESTIMATE FOR CONCRETE SLAB. VARIATIONS MAY BE ENCOUNTERED IN THESE ESTIMATED QUANTITIES BUT THESE VARIATIONS CANNOT BE USED FOR AN ADJUSTMENT IN CONTRACT UNIT PRICE PER SQUARE YARD OF SLAB ON STEEL.

IN ORDER TO MAINTAIN GRADE AND A MINIMUM THICKNESS OF OVERLAY AS SHOWN ON PLANS IT MAY BE NECESSARY TO USE ADDITIONAL QUANTITIES OF OVERLAY AT VARIOUS LOCATIONS THROUGHOUT THE STRUCTURE. NO PAYMENT WILL BE ALLOWED FOR ADDITIONAL LABOR, MATERIALS OR EQUIPMENT FOR VARIATIONS IN THICKNESS OF OVERLAY.

GENERAL NOTES:

DESIGN SPECIFICATIONS:

A.A.S.H.T.O. - 1992.
LOAD FACTOR DESIGN
A.A.S.H.T.O.-1983 GUIDE SPECIFICATIONS FOR SEISMIC DESIGN
SEISMIC PERFORMANCE CATEGORY A

DESIGN LOADINGS:

HS20-44
MODIFIED 24,000# TANDEM AXLE
EARTH 120#/CU. FT.
EQUIVALENT FLUID PRESSURE = 45#/CU. FT.
FATIGUE CASE II

DESIGN UNIT STRESSES:

CLASS B CONCRETE (SUBSTRUCTURE) f'c = 3,000 PSI.
CLASS B1 CONCRETE (SAFETY BARRIER CURB) f'c = 4,000 PSI.
CLASS B2 CONCRETE (SUPERSTRUCTURE EXCEPT SAFETY BARRIER CURB) f'c = 4,000 PSI.
REINFORCING STEEL (GRADE 60) fy = 60,000 PSI.
STEEL PILE fb = 9,000 PSI.
STRUCTURAL CARBON STEEL fy = 36,000 PSI.
STRUCTURAL STEEL (A.S.T.M. A572) GRADE 50 fy = 50,000 PSI.

FABRICATED STEEL CONNECTIONS:

FIELD CONNECTIONS SHALL USE HIGH STRENGTH BOLTS 3/4"Ø AND HOLES 13/16"Ø, EXCEPT AS NOTED.
HIGH STRENGTH BOLTS, NUTS AND WASHERS SHALL BESAMPLED FOR QUALITY ASSURANCE AS SPECIFIED IN STANDARD SPECIFICATION 106 AND FIELD SECTION (FS-712).

JOINT FILLER:

ALL JOINT FILLER SHALL MEET THE REQUIREMENTS OF STANDARD SPECIFICATION 1057.2.4, EXCEPT AS NOTED.

REINFORCING STEEL:

MINIMUM CLEARANCE TO THE REINFORCING STEEL SHALL BE 1-1/2" UNLESS OTHERWISE SHOWN.
ALL REINFORCING BARS IN TOPS OF SUBSTRUCTURE BEAMS OR CAPS SHALL BE SPACED TO CLEAR ANCHOR BOLTS FOR BEARINGS BY 1/2".

NEOPRENE PADS:

BEARINGS SHALL BE 60 DUROMETER NEOPRENE PADS. THE NEOPRENE PAD SHALL BE BONDED TO THE BEARING SEAT WITH AN EPOXY ADHESIVE AS APPROVED BY THE BEARING MANUFACTURER FOR BONDING NEOPRENE TO CONCRETE.

PAINTING:

SYSTEM E SHOP COATS (GRAY) NEW STEEL, SYSTEM E FIELD COATS (GRAY) IN ACORDANCE WITH THE SPECIAL PROVISIONS.

AREAS TO BE ENCASED IN END BENT CONCRETE SHALL BE PAINTED ONE COAT OF SYSTEM E TO PRODUCE A DRY FILM THICKNESS OF NOT LESS THAN 1.5 MILS NOR MORE THAN 2.5 MILS AND SCRATCHED OR DAMAGED SURFACES ARE TO BE TOUCHED UP IN THE FIELD BEFORE CONCRETE IS POURED.

CONSTRUCTION CLEARANCE:

MAINTAIN ONE OPENING 5240" WIDE & 1449" HIGH FOR MANCHESTER TRAFFICWAY.

TRAFFIC MAINTAINED:

MAINTAIN TRAFFIC ON EXISTING BRIDGE DURING CONSTRUCTION. (SEE ROAD PLANS)

OUTLINE OF OLD WORK IS INDICATED BY LIGHT DASHED LINES. HEAVY LINES INDICATE NEW WORK.

BARS BONDED IN OLD CONCRETE, NOT REMOVED, SHALL BE CLEANLY STRIPPED AND EMBEDDED INTO NEW CONCRETE WHERE POSSIBLE. IF LENGTH IS AVAILABLE, OLD BARS SHALL EXTEND INTO NEW CONCRETE AT LEAST 40 DIAMETERS FOR SMOOTH BARS AND 30 DIAMETERS FOR DEFORMED BARS,UNLESS OTHERWISE NOTED.

CONTRACTOR SHALL VERIFY ALL DIMENSIONS IN FIELD BEFORE ORDERING NEW STEEL.

RESIN ANCHOR SYSTEMS:

COST OF FURNISHING AND INSTALLING RESIN ANCHOR SYSTEMS SHALL BE INCLUDED IN THE CONTRACT UNIT PRICE FOR CONCRETE. SEE SPECIAL PROVISIONS FOR ACCEPTABLE RESIN ANCHOR SYSTEMS.
THESE RESIN ANCHOR SYSTEMS SHALL BE INSTALLED ACCORDING TO THE MANUFACTURER'S SPECIFICATIONS, EXCEPT AS MODIFIED BY THE JOB SPECIAL PROVISIONS AND THAT A #6 GRADE 60 REINFORCING BAR 2'-6" LONG SHALL BE SUBSTITUTED FOR THE 3/4" Ø THREADED ROD STUD.

PILE AND FOOTING DATA

BENT NO.		EASTBOUND LANE 1	2	3	4	5	6	WESTBOUND LANE 1	2	3	4	5	6
PILE TYPE AND SIZE		HP10x42	HP10X42	HP10X42	HP10X42	HP10X42	HP10X42	HP10X42	HP10X42	HP10X42	HP10X42	HP10X42	HP10X42
NUMBER		5	8	8	10	8	5	6	8	8	10	8	6
APPROXIMATE LENGTH (FT.)	STAGE 1 CONST.	64	42	41	33	27	34	64	42	41	33	27	34
	STAGE 2 CONST.	64	42	41	31	20	32	64	43	38	36	32	39
DESIGN BEARING (TONS)		28	48	54	55	54	31	28	48	54	55	54	31
HAMMER ENERGY REQ'D (FT.-LBS.)	STAGE 1 CONST.	8,000	11,200	12,600	13,000	12,600	7,000	8,000	11,200	12,600	13,000	12,600	7,000
	STAGE 2 CONST.	8,000	11,200	12,600	13,000	12,600	7,000	8,000	11,200	12,600	13,000	12,600	7,000

MINIMUM ENERGY REQUIREMENT OF HAMMER IS BASED ON PLAN LENGTH AND DESIGN BEARING VALUE OF PILES.

ALL PILES SHALL BE DRIVEN TO PRACTICAL REFUSAL.

DETAILED APR. 1993
CHECKED APR. 1993

NOTE: THIS DRAWING IS NOT TO SCALE. FOLLOW DIMENSIONS.

3 REVISED: JUNE 28, 1994

JACKSON COUNTY A-1427R1

194

STATE	PROJ. NO.	SHEET NO.
MO.		21

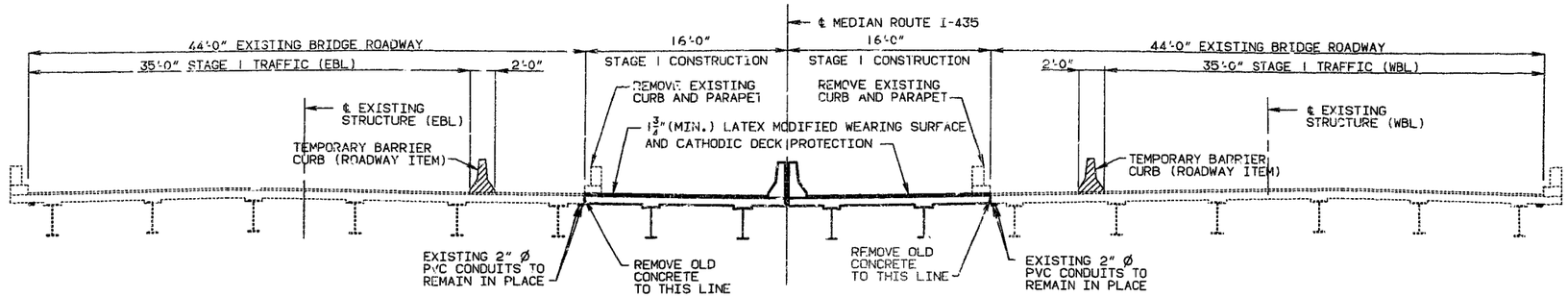

STAGE 1

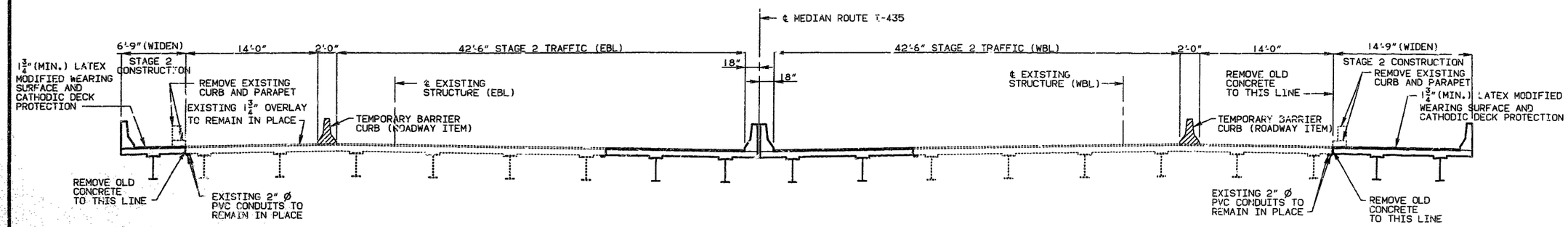

STAGE 2

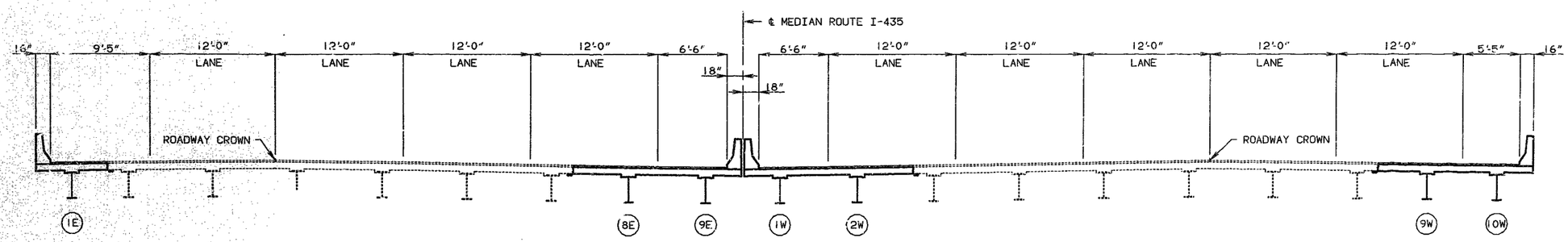

FINISHED STAGE

NOTE: INSTALL CATHODIC PROTECTION SYSTEM WITH 1-3/4" LATEX MODIFIED CONCRETE OVERLAY. ROUGHEN NEW CONCRETE BEFORE APPLYING 1-3/4" OVERLAY.

DETAILS OF STAGE CONSTRUCTION

DETAILED AUG. 1992
CHECKED APR. 1993

NOTE: THIS DRAWING IS NOT TO SCALE. FOLLOW DIMENSIONS.

SHEET NO. 3 OF 63.

JACKSON COUNTY

A-1427R1

STATE	PROJ. NO.	SHEET NO.
MD.		218

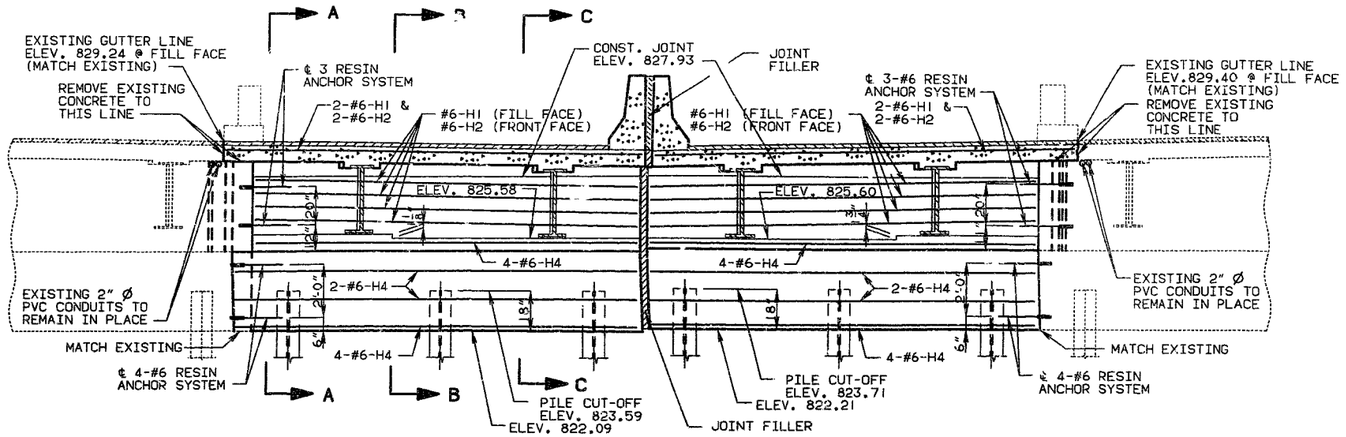

PART SECTION NEAR END BENT (WESTBOUND LANE)

PART SECTION NEAR END BENT (EASTBOUND LANE)

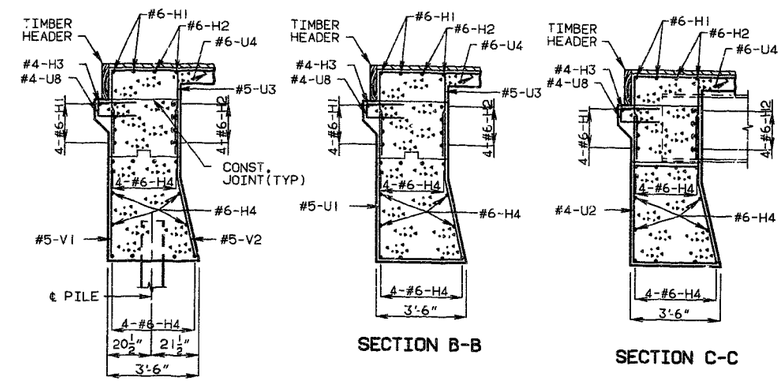

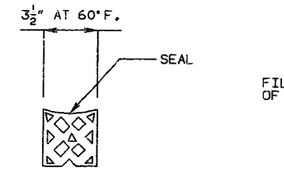

PART CROSS SECTION THRU COMP. JOINT SEAL

NOTE: DEPTH OF SEAL SHALL NOT BE LESS THAN WIDTH OF SEAL.
SEE SPECIAL PROVISIONS FOR REQUIREMENTS OF COMPRESSION JOINT SEAL.

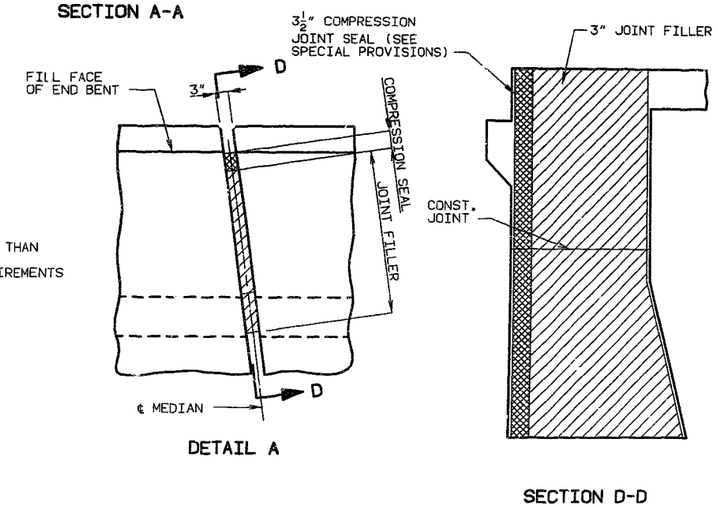

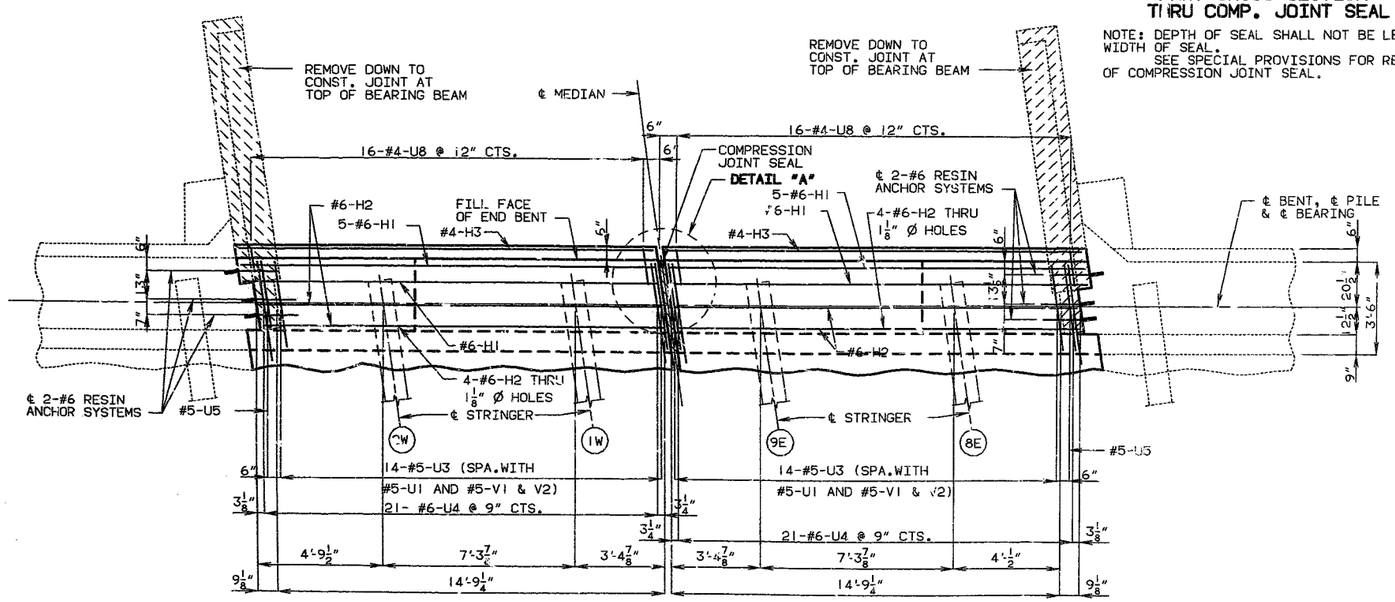

PART PLAN (WESTBOUND LANE)

PART PLAN (EASTBOUND LANE)

NOTE: FOR PLAN OF BEAM SEE SHEET NO. 5.

SAFETY BARRIER CURBS SHALL NOT BE POURED UNTIL THE SLAB HAS BEEN POURED IN THE ADJACENT SPAN.

FOR REINFORCEMENT OF SAFETY BARRIER CURB NOT SHOWN, SEE SHEET NO.46.

ALL CONCRETE IN THE END BENT ABOVE TOP OF BEAM AND BELOW TOP OF SLAB SHALL BE CLASS B2.

THE CONCRETE DIAPHRAGMS SHALL BE POURED PRIOR TO THE SLAB, ALLOWING SUFFICIENT TIME FOR THE SET OF THE CONCRETE IN THE DIAPHRAGMS.

FOR DETAIL OF STEEL PILE SPLICE AND KEY DETAIL SEE SHEET NO. 5.

FOR SUBSTRUCTURE QUANTITIES SEE SHEET NO. 5.

THE AREA EXPOSED BY THE REMOVAL OF CONCRETE AND NOT COVERED BY NEW CONCRETE SHALL BE COATED WITH AN APPROVED BITUMINOUS PAINT.

DETAILED AUG. 1992
CHECKED MAR. 1993

NOTE: THIS DRAWING IS NOT TO SCALE. FOLLOW DIMENSIONS.

DETAILS OF END BENT NO. 1 (STAGE 1 CONSTRUCTION)

SHEET NO. 4 OF 63.

JACKSON COUNTY

A-1427R1

2943 196

STATE	PROJ. NO.	SHEET NO.
MO.		219

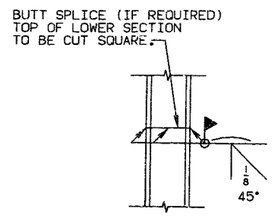

DETAIL OF STEEL PILE SPLICE

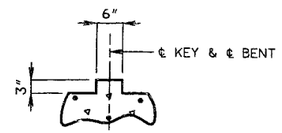

DETAIL OF KEY

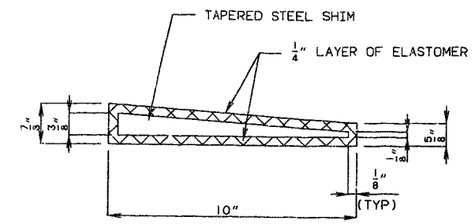

ELEVATION OF LAMINATED NEOPRENE BEARING (10" X 10")

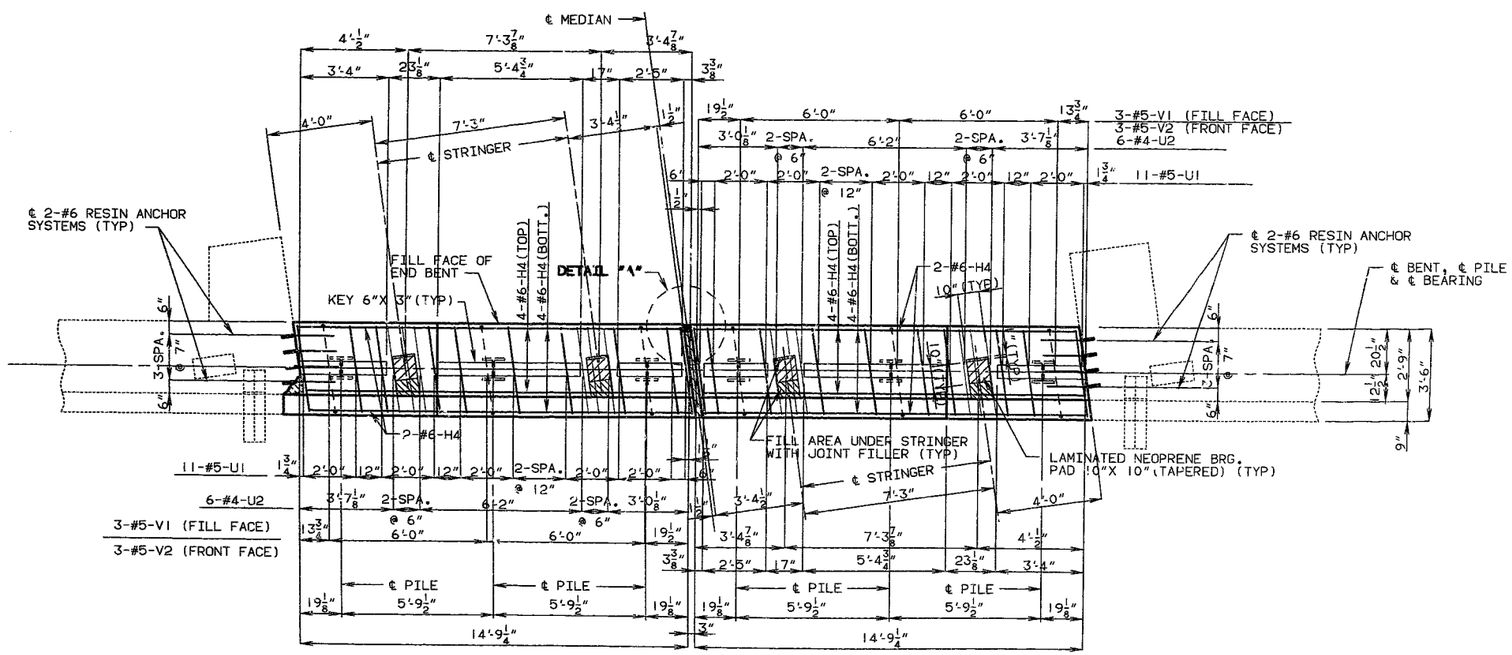

PART PLAN OF BEAM (WESTBOND LANE) PART PLAN OF BEAM (EASTBOND LANE)

NOTE: FOR PART SECTION NEAR OF END BENT, PART PLAN OF END BENT, SECTIONS THRU END BENT, DETAIL "A" AND DETAILS OF COMPRESSION JOINT SEAL IN BEAM AND DIAPHRAGM, SEE SHEET NO. 4.

THE AREA EXPOSED BY THE REMOVAL OF CONCRETE AND NOT COVERED BY NEW CONCRETE SHALL BE COATED WITH AN APPROVED BITUMINOUS PAINT.

SUBSTRUCTURE QUANTITIES

ITEM		QUANTITY
CLASS I EXCAVATION	CU.YD.	45
STRUCT. STEEL PILE (10")	LIN.FT.	704
CLASS B CONC.(SUBSTR.)	CU.YD.	22.7

THESE QUANTITIES ARE INCLUDED IN THE ESTIMATED QUANTITIES TABLE ON SHEET NO. 2.

DETAILS OF END BENT NO. 1 (STAGE 1 CONSTRUCTION)

DETAILED AUG. 1992
CHECKED MAR. 1993

NOTE: THIS DRAWING IS NOT TO SCALE. FOLLOW DIMENSIONS.

SHEET NO. 5 OF 63.

JACKSON COUNTY A-1427R1

~~244~~ 197

STATE	PROJ. NO.	SHEET NO.
MO.		220

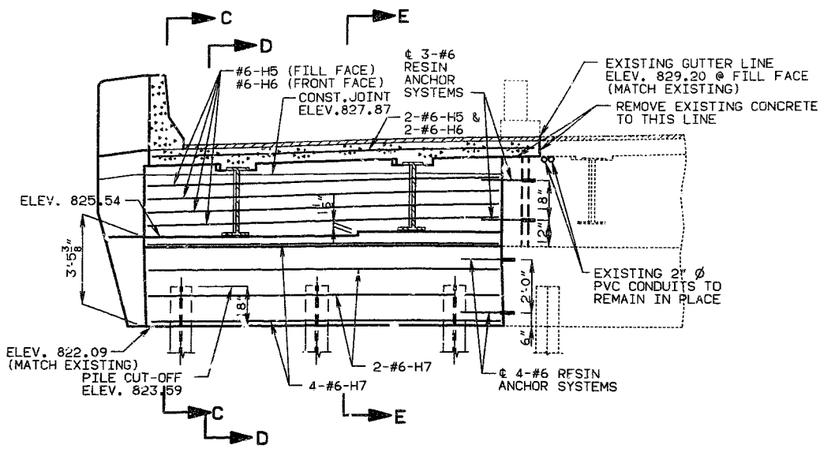

PART SECTION NEAR END BENT (WESTBOUND LANE)

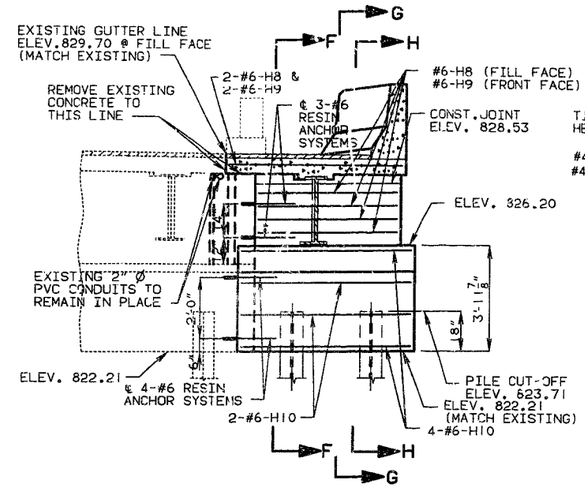

PART SECTION NEAR END BENT (EASTBOUND LANE)

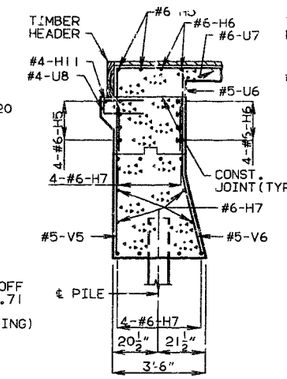

SECTION C-C

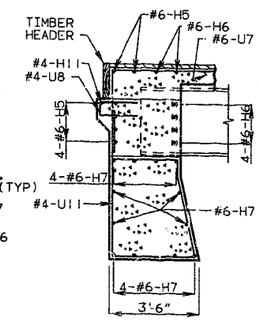

SECTION D-D

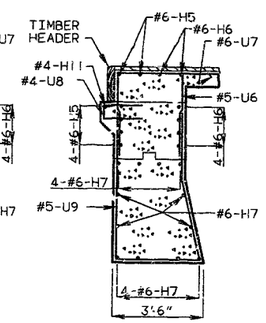

SECTION E-E

NOTE: LEAVE EXISTING REINFORCEMENT IN PLACE. CUT OR BEND AS NECESSARY TO MAINTAIN MINIMUM CLEARANCE.

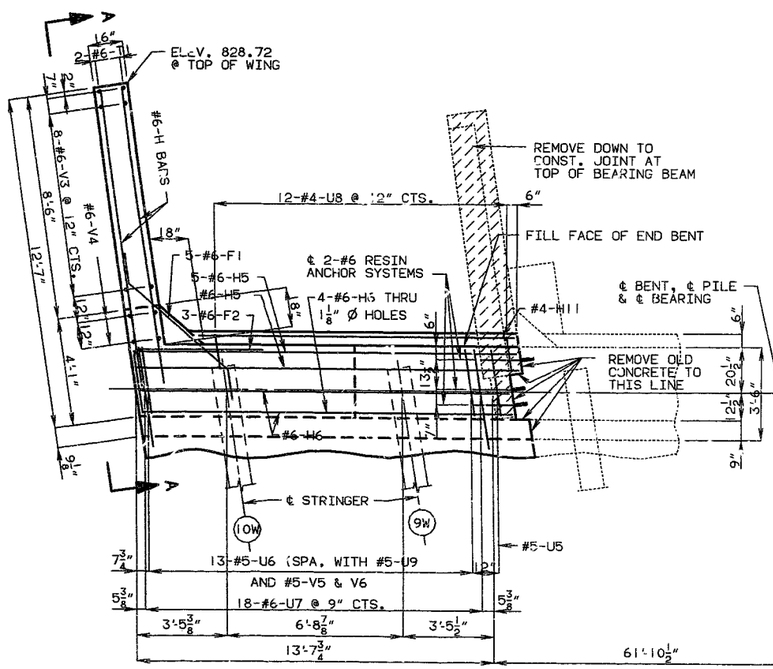

PART PLAN (WESTBOUND LANE)

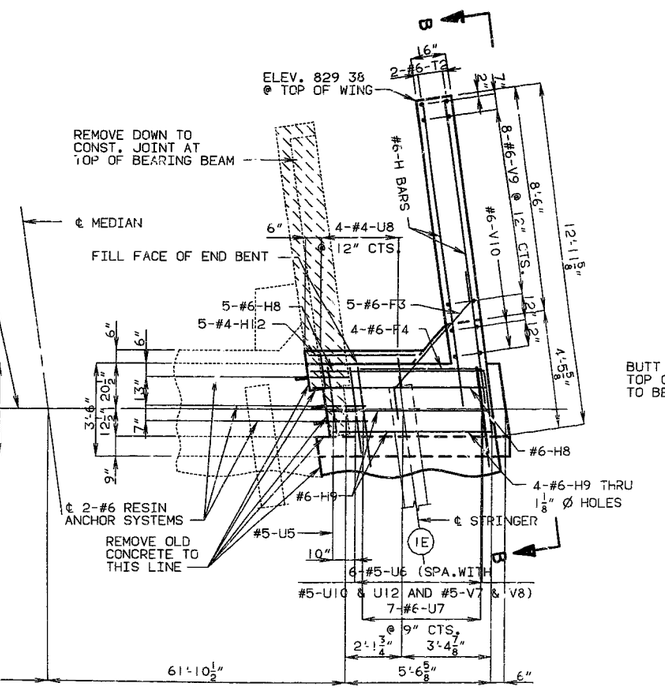

PART PLAN (EASTBOUND LANE)

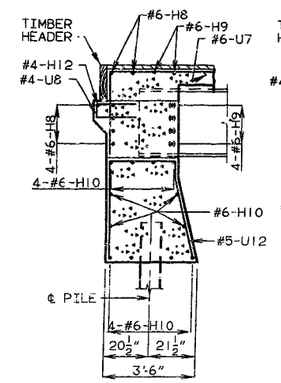

SECTION F-F

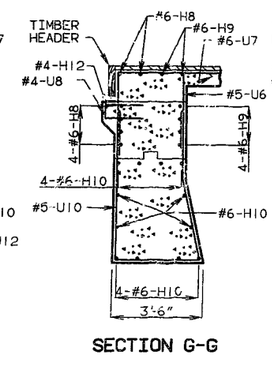

SECTION G-G

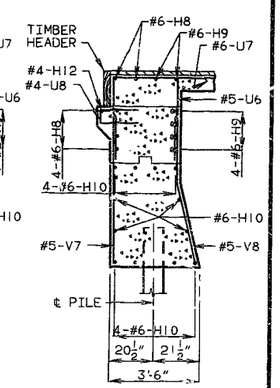

SECTION H-H

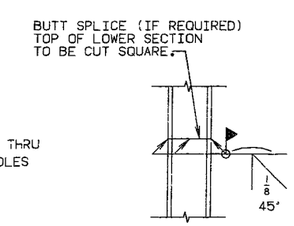

DETAIL OF STEEL PILE SPLICE

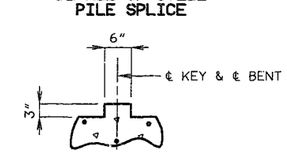

DETAIL OF KEY

NOTE: FOR PART PLAN OF BEAM, ELEVATIONS A-A AND B-B, SEE SHEET NO. 7.

FIELD BENDING SHALL BE REQUIRED AT WINGS FOR F1 & F3 BARS WHEN NECESSARY TO CONFORM TO SLOPE OF WING.

FOR REINFORCEMENT OF SAFETY BARRIER CURB NOT SHOWN, SEE SHEETS NO.47 & 48.

FOR SUBSTRUCTURE QUANTITIES SEE SHEET NO. 5.

THE CONCRETE DIAPHRAGMS SHALL BE POURED PRIOR TO THE SLAB, ALLOWING SUFFICIENT TIME FOR THE SET OF THE CONCRETE IN THE DIAPHRAGMS.

DETAILS OF END BENT NO. 1 (STAGE 2 CONSTRUCTION)

DETAILED OCT. 1992
CHECKED MAR. 1993

NOTE: THIS DRAWING IS NOT TO SCALE, FOLLOW DIMENSIONS.

JACKSON COUNTY

A-1427R1

STATE	PROJ. NO.	SHEET NO.
MO.		221

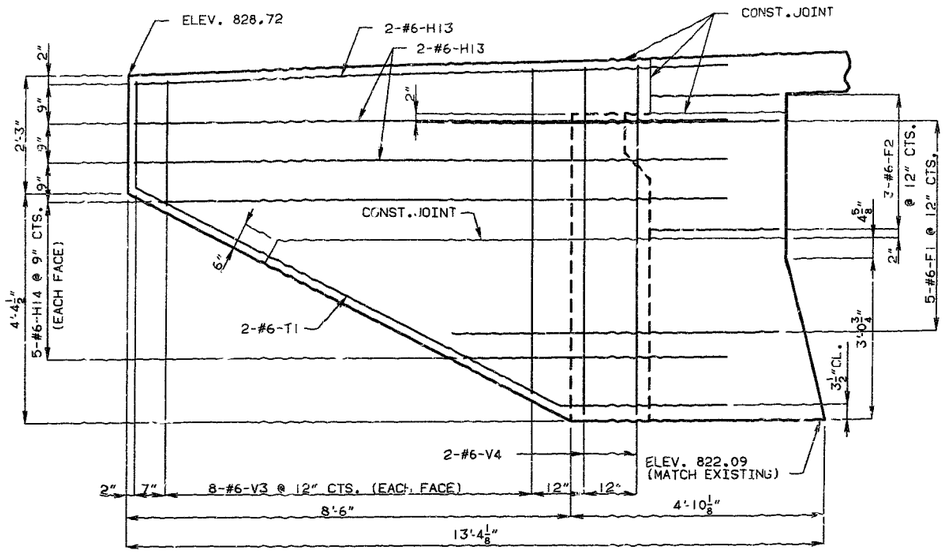

ELEVATION A-A

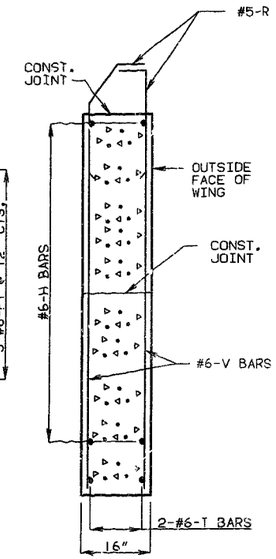

SECTION THRU WING

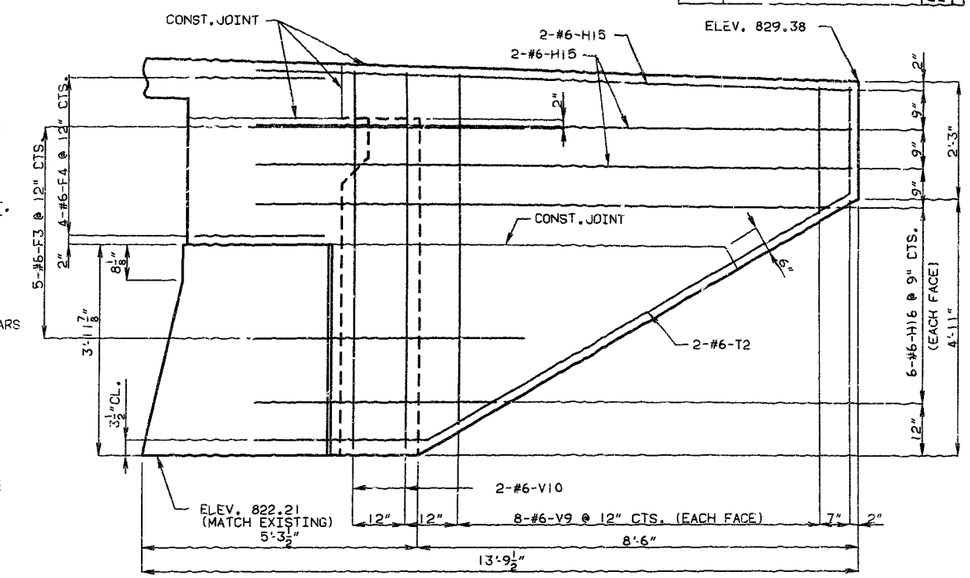

ELEVATION B-B

NOTE: FOR PART SECTION NEAR END BENT, PART PLAN AND SECTIONS THRU END BENT SEE SHEET NO. 6.

FOR LOCATION OF ELEVATIONS A-A AND B-B, SEE SHEET NO. 6.

FIELD BENDING SHALL BE REQUIRED AT WINGS FOR F1 & F3 BARS WHEN NECESSARY TO CONFORM TO SLOPE OF WING.

FOR REINFORCEMENT OF SAFETY BARRIER CURB NOT SHOWN, SEE SHEETS NO. 47 & 48.

FOR SUBSTRUCTURE QUANTITIES SEE SHEET NO. 5.

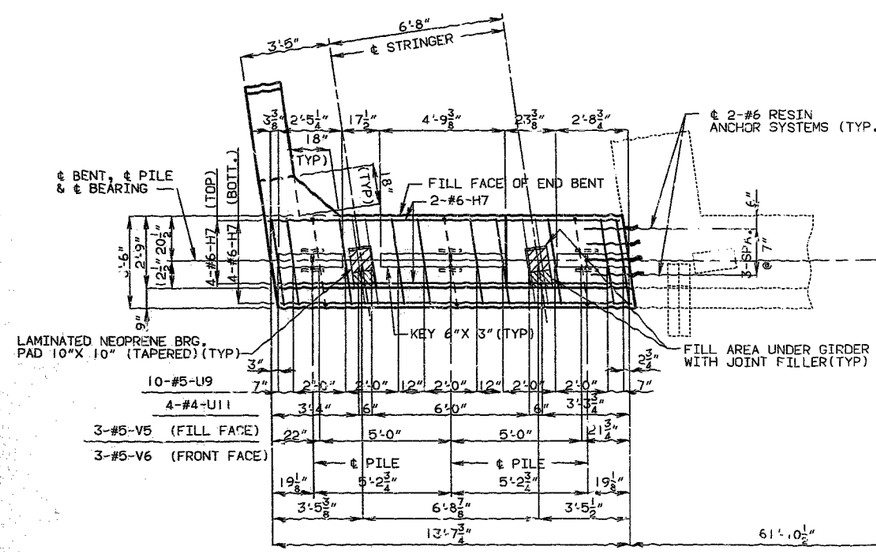

PART PLAN OF BEAM (WESTBOUND LANE)

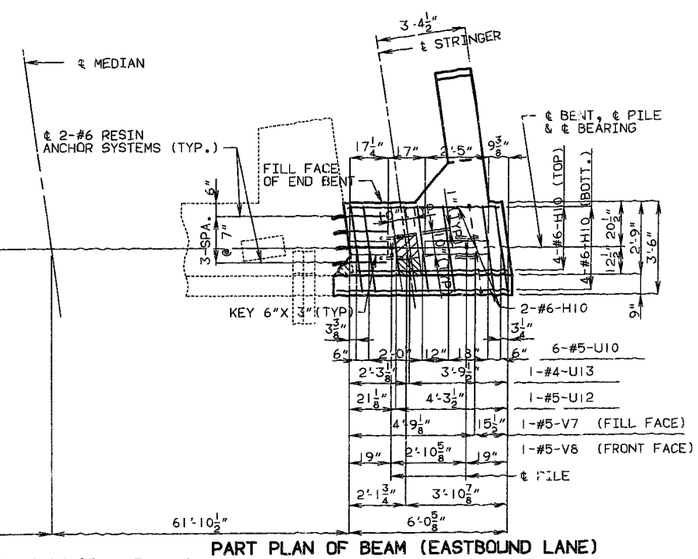

PART PLAN OF BEAM (EASTBOUND LANE)

DETAILS OF END BENT NO. 1 (STAGE 2 CONSTRUCTION)

DETAILED AUG. 1992
CHECKED MAR. 1993

NOTE: THIS DRAWING IS NOT TO SCALE. FOLLOW DIMENSIONS.

SHEET NO. 7 OF 63.

JACKSON COUNTY A-1427R1

351 ~~352~~

STATE	PROJ. NO.	SHEET NO.
MO.		222

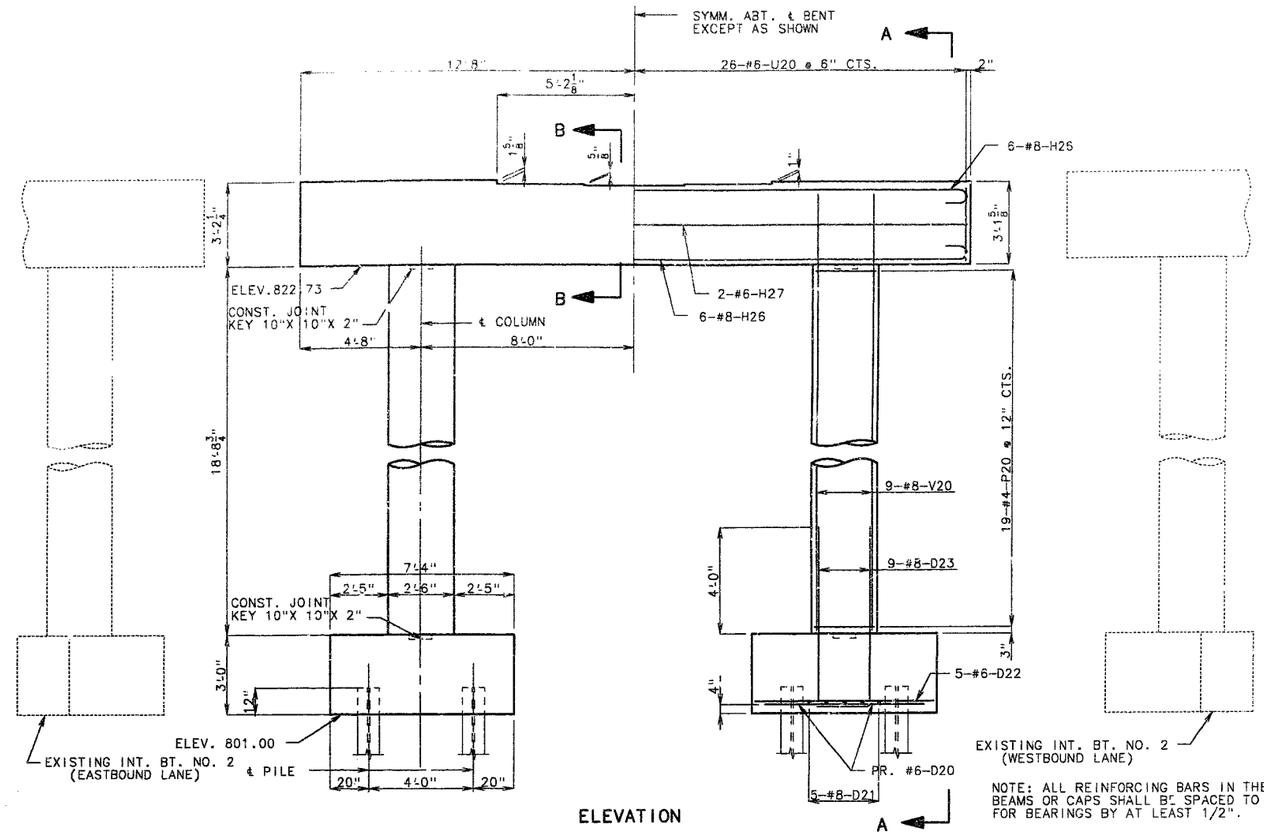

ELEVATION

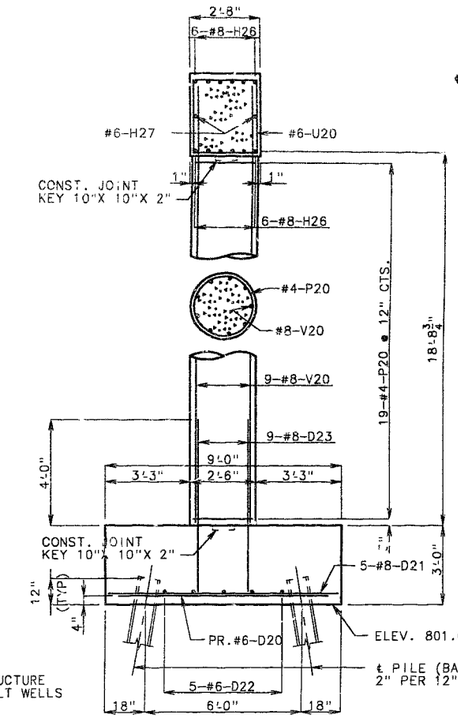

SECTION A-A

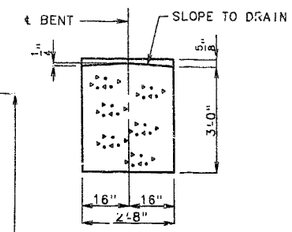

SECTION B-B

NOTE: ALL REINFORCING BARS IN THE TOPS OF SUBSTRUCTURE BEAMS OR CAPS SHALL BE SPACED TO CLEAR ANCHOR BOLT WELLS FOR BEARINGS BY AT LEAST 1/2".

FOR DETAILS OF TYPE "D" BEARINGS, SEE SHEET NO. 26.

FOR DETAIL OF STEEL PILE SPLICE, SEE SHEET NO. 5.

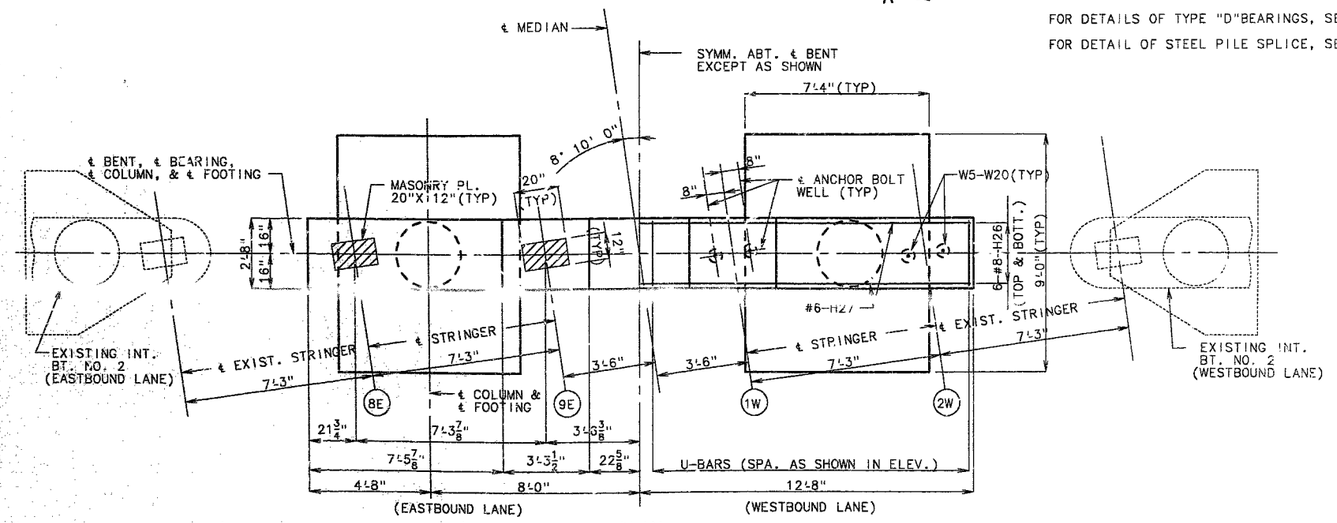

PLAN

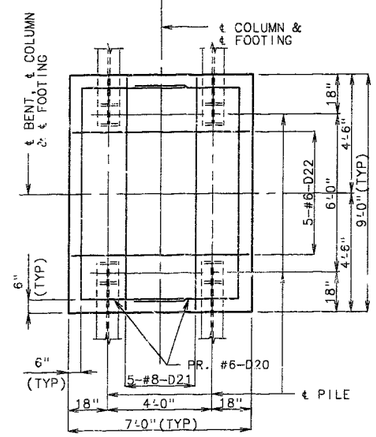

PLAN OF FOOTING

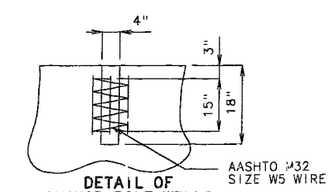

DETAIL OF ANCHOR BOLT WELLS

SUBSTRUCTURE QUANTITIES

ITEM		QUANTITY
CLASS 1 EXCAVATION	CU.YD.	100.0
STRUCT. STEEL PILE (10")	LIN.FT.	676
CLASS B CONC.(SUBSTR.)	CU.YD.	57.2
REINF. STEEL	[illegible]	7,030

THESE QUANTITIES ARE INCLUDED IN THE ESTIMATED QUANTITIES TABLE ON SHEET NO. 2.

DETAILS OF INTERMEDIATE BENT NO. 2 (STAGE 1 CONSTRUCTION)

DETAILED OCT. 1992
CHECKED FEB. 1993

NOTE: THIS DRAWING IS NOT TO SCALE. FOLLOW DIMENSIONS.

SHEET NO. 8 OF 63.

JACKSON COUNTY A-1427R1

247 200

STATE	PROJ. NO.	SHEET NO.
MO.		223

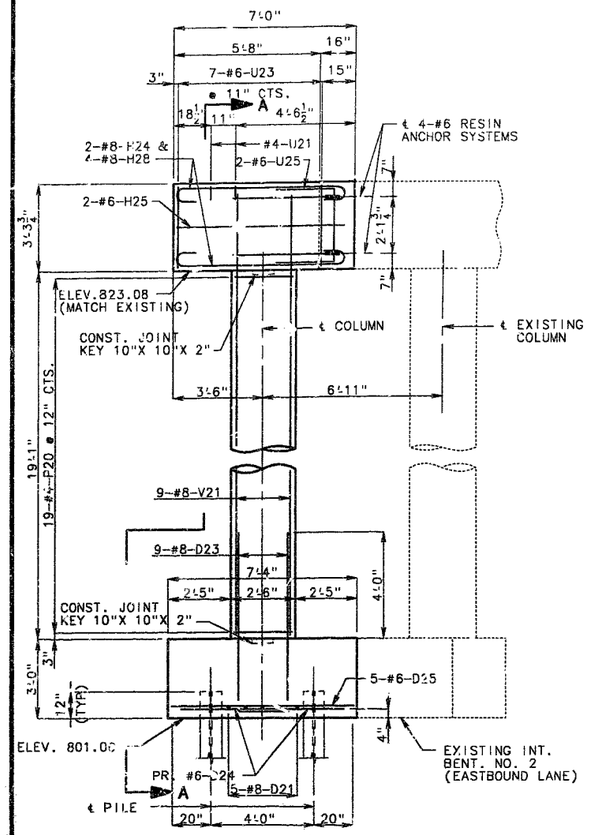

ELEVATION (EASTBOUND LANE)

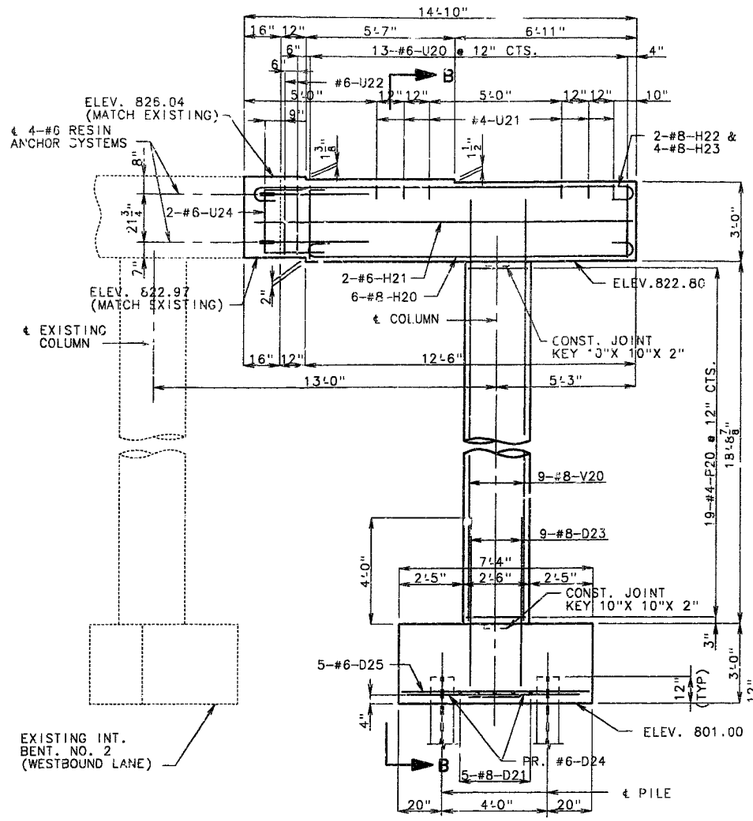

ELEVATION (WESTBOUND LANE)

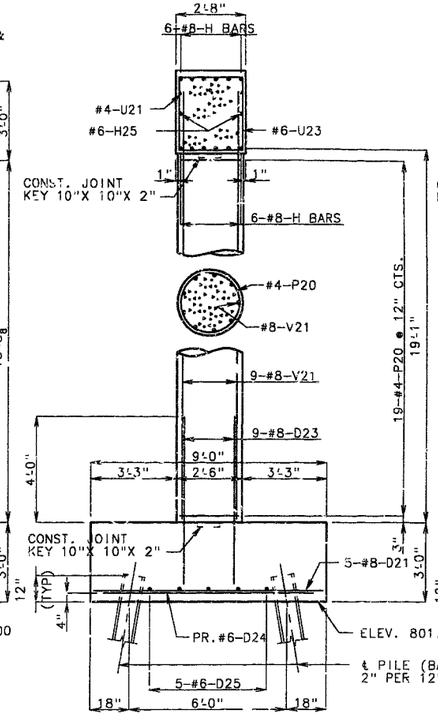

SECTION A-A

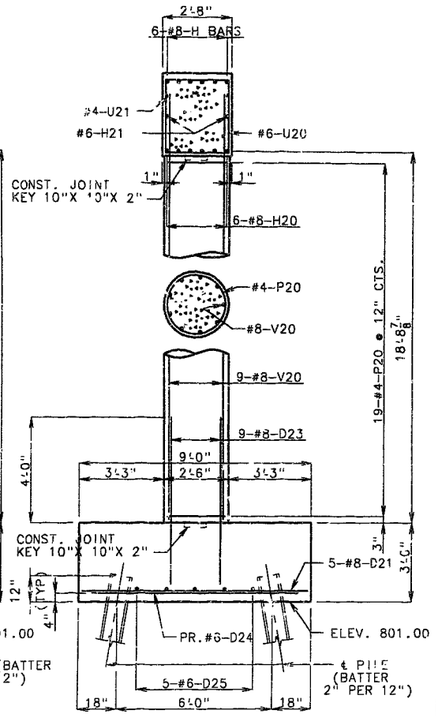

SECTION B-B

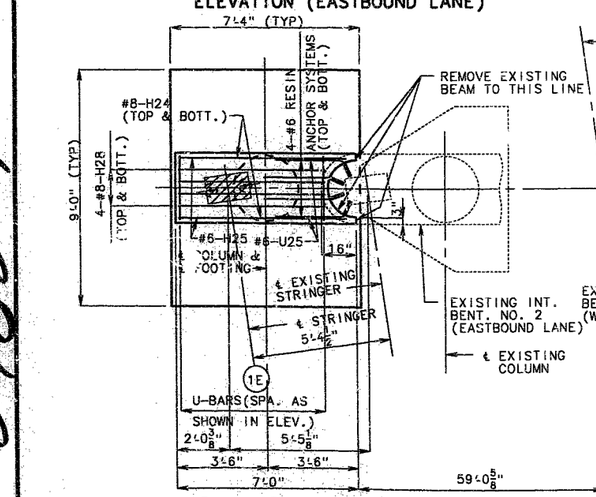

PLAN (EASTBOUND LANE)

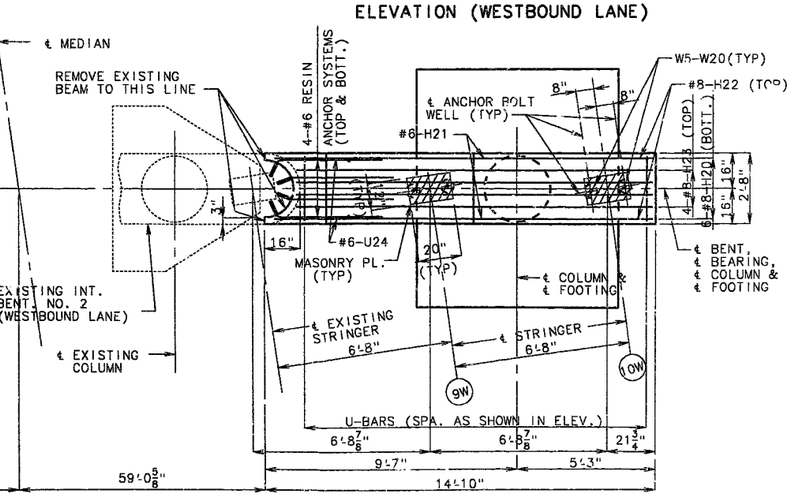

PLAN (WESTBOUND LANE)

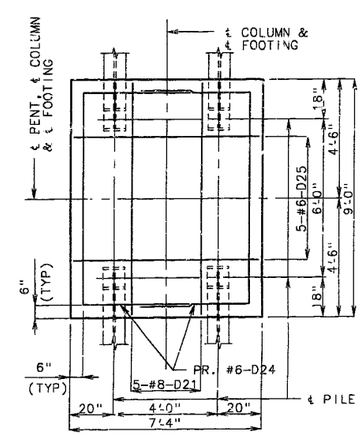

PLAN OF FOOTING

NOTE: FOR SUBSTRUCTURE QUANTITIES SEE SHEET NO. 8.
FOR DETAIL OF ANCHOR BOLT WELL SEE SHEET NO. 8.
FOR DETAIL OF PILE SPLICE SEE SHEET NO. 5.

DETAILED OCT. 1992
CHECKED MAR. 1993

NOTE: ALL REINFORCING BARS IN THE TOPS OF SUBSTRUCTURE BEAMS OR CAPS SHALL BE SPACED TO CLEAR ANCHOR BOLT WELLS FOR BEARINGS BY AT LEAST 1/2".

NOTE: THIS DRAWING IS NOT TO SCALE. FOLLOW DIMENSIONS.

DETAILS OF INTERMEDIATE BENT NO. 2 (STAGE 2 CONSTRUCTION)

SHEET NO. 9 OF 63.

JACKSON COUNTY

A-1427R1

1028301

STATE	PROJ. NO.	SHEET NO.
MO.		224

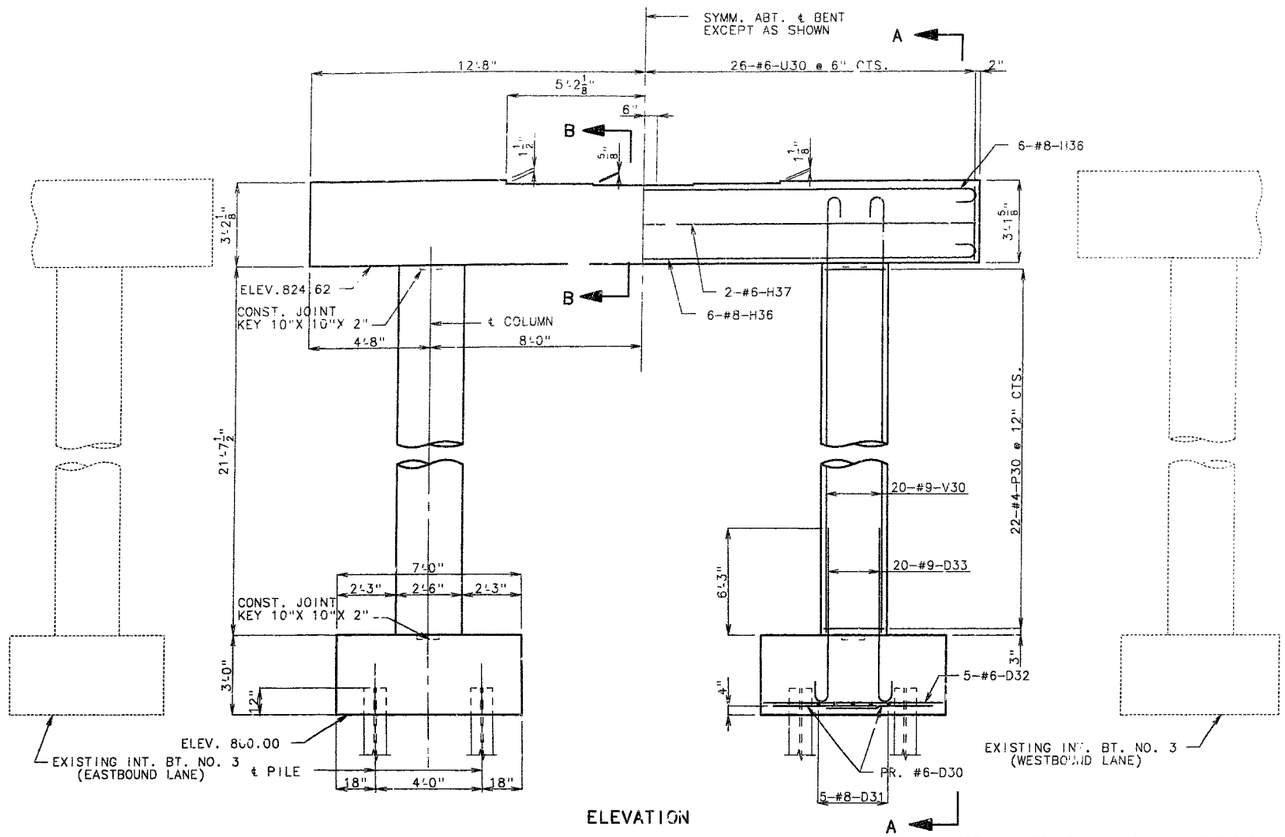

ELEVATION

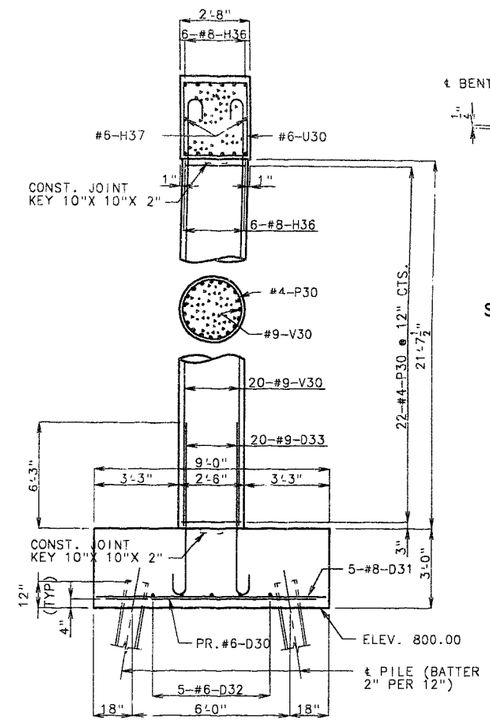

SECTION A-A

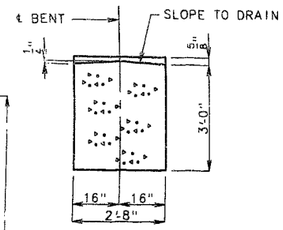

SECTION B-B

NOTE: ALL REINFORCING BARS IN THE TOPS OF SUBSTRUCTURE BEAMS OR CAPS SHALL BE SPACED TO CLEAR ANCHOR BOLT WELLS FOR BEARINGS BY AT LEAST 1/2".

FOR DETAILS OF ANCHOR BOLT WELL, SEE SHEET NO. 8.

FOR DETAILS OF TYPE "D"BEARINGS, SEE SHEET NO.26.

FOR DETAIL OF PILE SPLICE, SEE SHEET NO. 5.

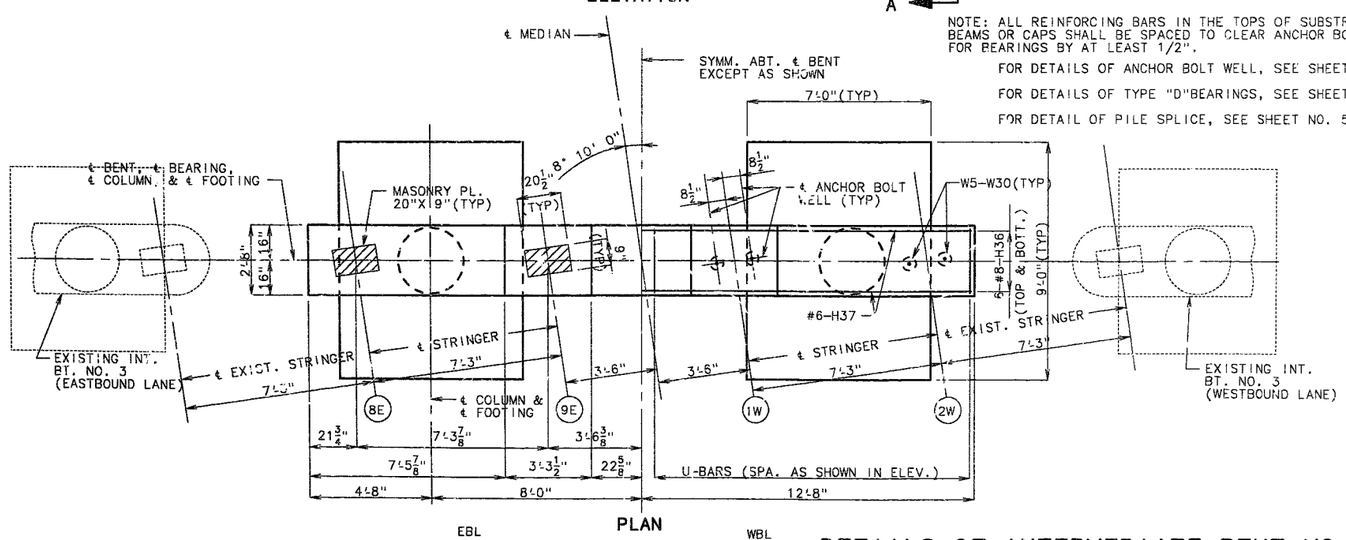

PLAN

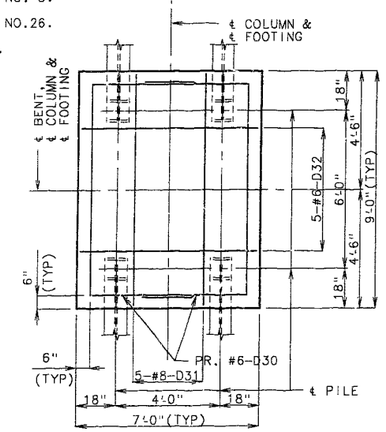

PLAN OF FOOTING

SUBSTRUCTURE QUANTITIES

ITEM		QUANTITY
CLASS 1 EXCAVATION	CU.YD.	105.0
STRUCT. STEEL PILE (10")	LIN.FT.	644
CLASS B CONC.(SUBSTR.)	CU.YD.	58.5
REINF. STEEL	LBS.	14,310

THESE QUANTITIES ARE INCLUDED IN THE ESTIMATED QUANTITIES TABLE ON SHEET NO. 2.

DETAILED NOV. 1992
CHECKED MAR. 1993

DETAILS OF INTERMEDIATE BENT NO. 3 (STAGE 1 CONSTRUCTION)

NOTE: THIS DRAWING IS NOT TO SCALE. FOLLOW DIMENSIONS.

SHEET NO. 10 OF 63.

JACKSON COUNTY

A-1427R1

STATE	PROJ. NO.	SHEET NO.
MO.		225

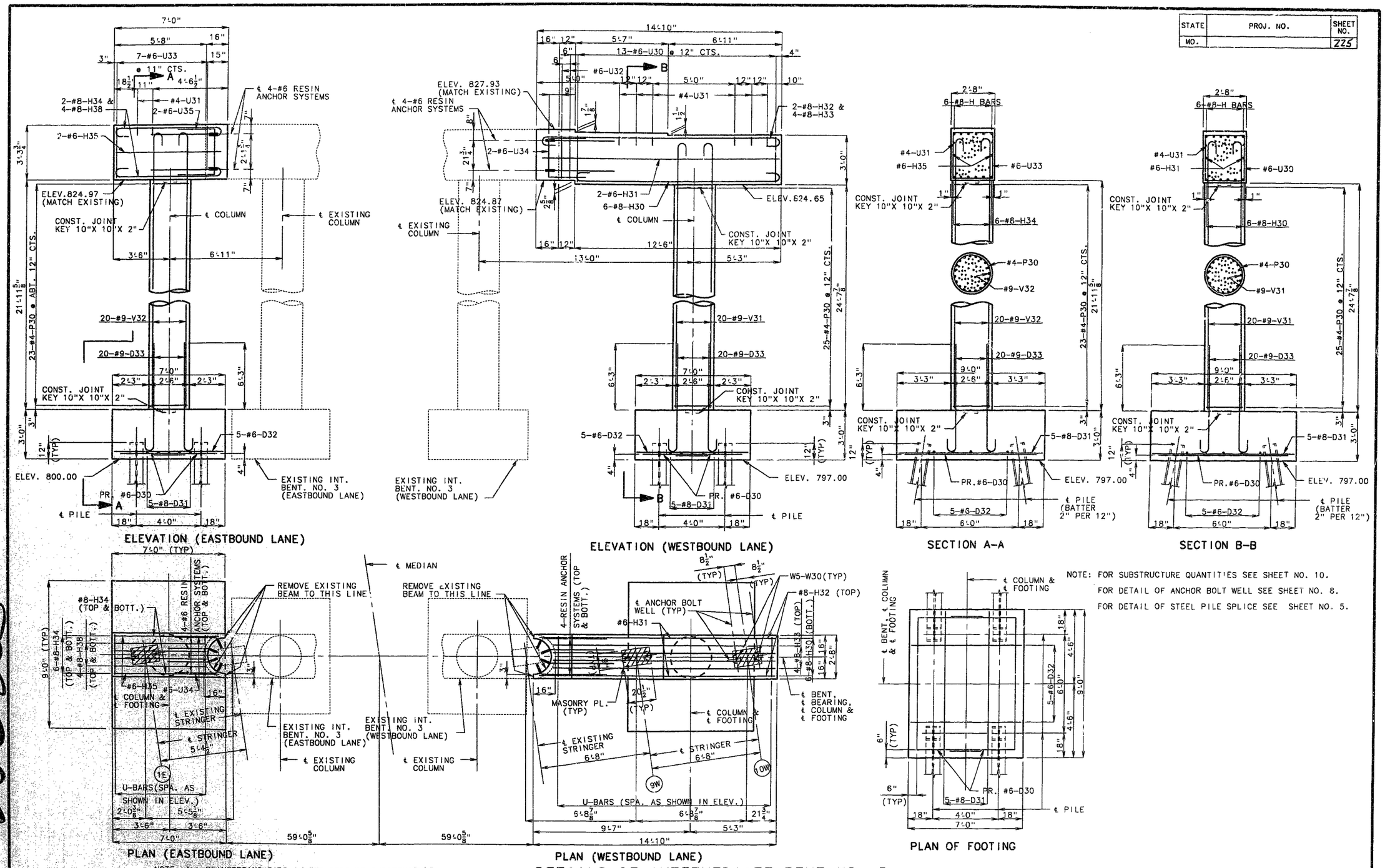

DETAILED OCT. 1992
CHECKED MAR. 1993

NOTE: ALL REINFORCING BARS IN THE TOPS OF SUBSTRUCTURE BEAMS OR CAPS SHALL BE SPACED TO CLEAR ANCHOR BOLT WELLS FOR BEARINGS BY AT LEAST 1/2".

NOTE: THIS DRAWING IS NOT TO SCALE. FOLLOW DIMENSIONS.

DETAILS OF INTERMEDIATE BENT NO. 3 (STAGE 2 CONSTRUCTION)

SHEET NO. 11 OF 63.

JACKSON COUNTY

A-1427R1

250-303

STATE	PROJ. NO.	SHEET NO.
MO.		Z26

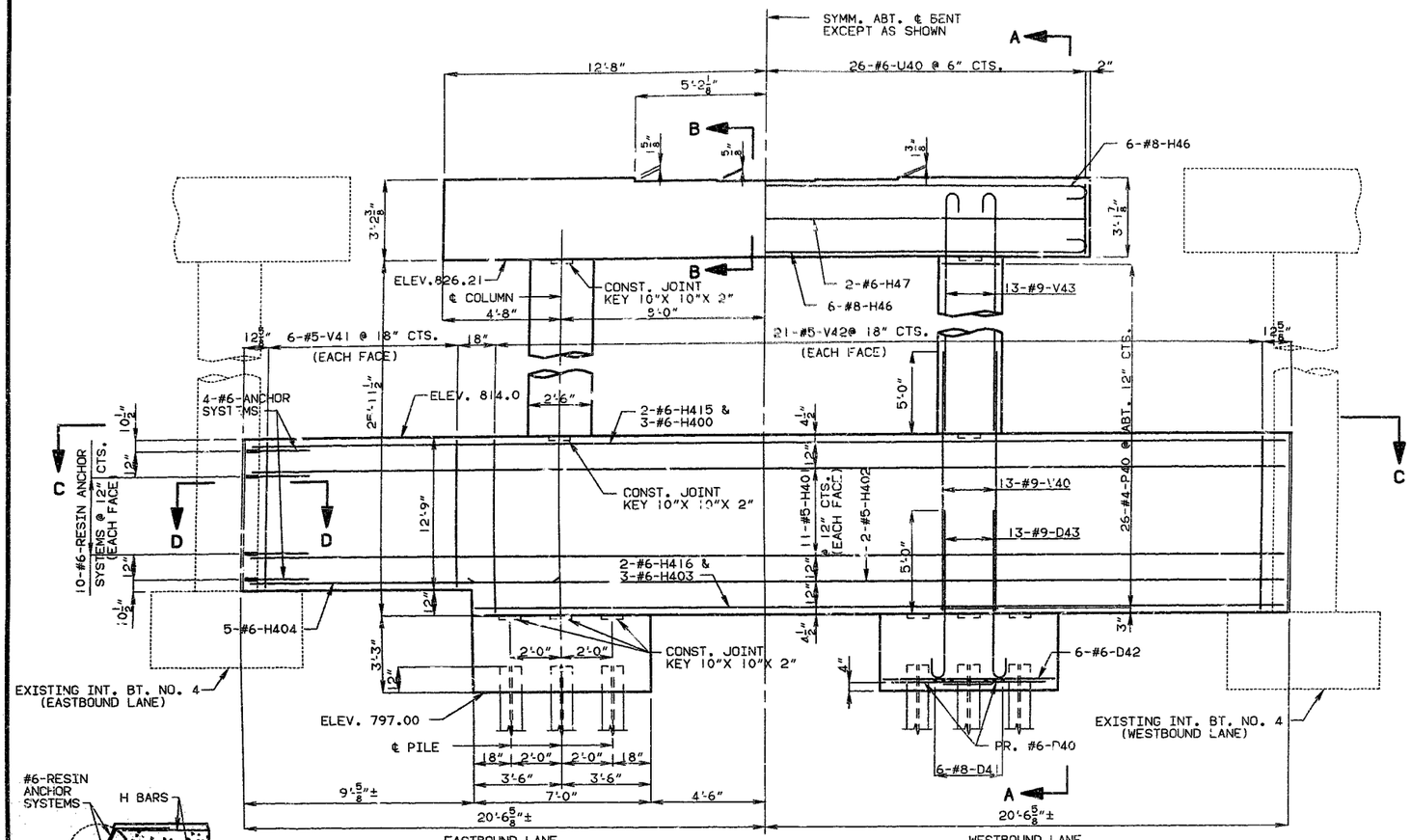

ELEVATION

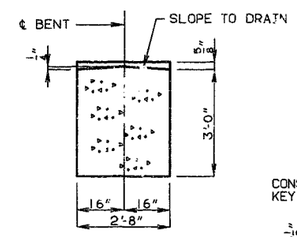

SECTION B-B

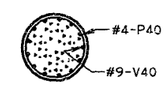

SECTION E-E

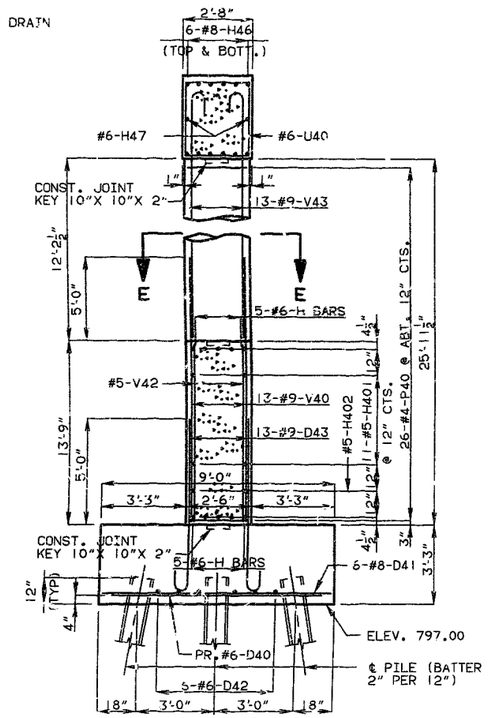

SECTION A-A

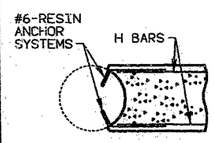

PART SECTION D-D

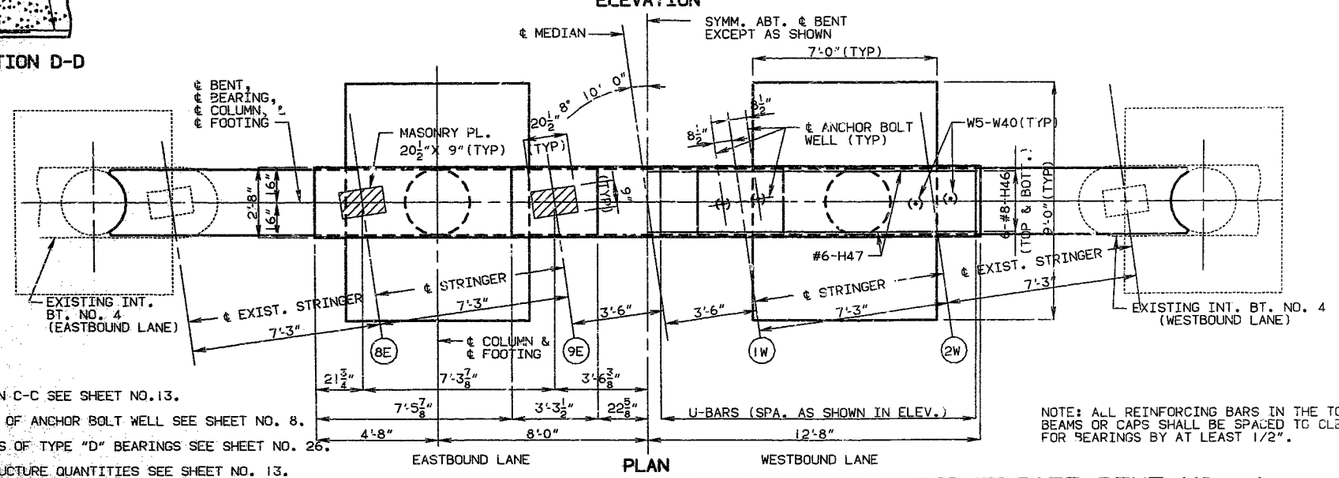

PLAN

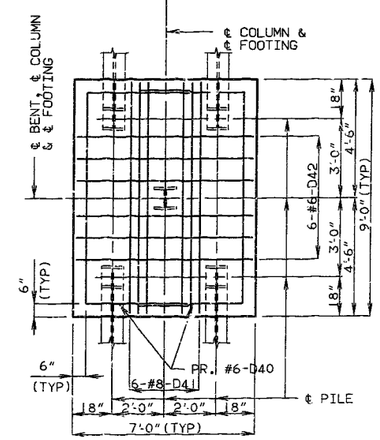

PLAN OF FOOTING

NOTE: FOR SECTION C-C SEE SHEET NO. 13.
FOR DETAIL OF ANCHOR BOLT WELL SEE SHEET NO. 8.
FOR DETAILS OF TYPE "D" BEARINGS SEE SHEET NO. 26.
FOR SUBSTRUCTURE QUANTITIES SEE SHEET NO. 13.
FOR DETAIL OF STEEL PILE SPLICE SEE SHEET NO. 5.

NOTE: ALL REINFORCING BARS IN THE TOPS OF SUBSTRUCTURE BEAMS OR CAPS SHALL BE SPACED TO CLEAR ANCHOR BOLT WELLS FOR BEARINGS BY AT LEAST 1/2".

DETAILED NOV. 1992
CHECKED APR. 1993

DETAILS OF INTERMEDIATE BENT NO. 4 (STAGE I CONSTRUCTION)

NOTE: THIS DRAWING IS NOT TO SCALE. FOLLOW DIMENSIONS.

JACKSON COUNTY

A-1427R1

STATE	PROJ. NO.	SHEET NO.
MO.		227

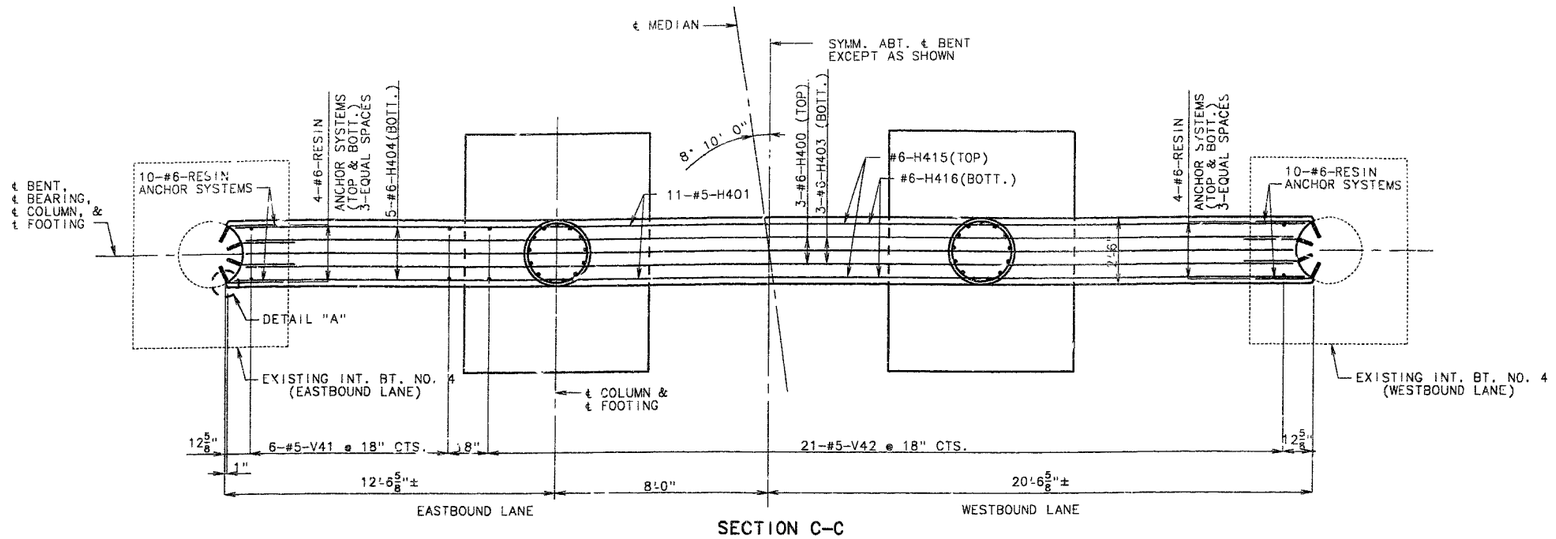

SECTION C-C

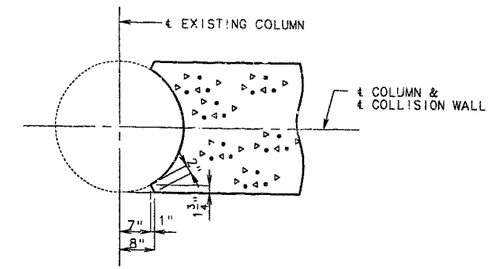

DETAIL "A"

NOTE: FOR LOCATION OF SECTION C-C SEE SHEET NO.13.

SUBSTRUCTURE QUANTITIES		
ITEM		QUANTITY
CLASS 1 EXCAVATION	CU. YD.	195.0
STRUCT. STEEL PILE (10")	LIN.FT.	655
CLASS B CONC.(SUBSTR.)	CU.YD.	215.5
REINF. STEEL	LBS.	19,800

THESE QUANTITIES ARE INCLUDED IN THE ESTIMATED QUANTITIES TABLE ON SHEET NO. 2.

DETAILS OF INTERMEDIATE BENT NO. 4 (STAGE 1 CONSTRUCTION)

DETAILED NOV. 1992
CHECKED APR. 1993

NOTE: THIS DRAWING IS NOT TO SCALE. FOLLOW DIMENSIONS.

JACKSON COUNTY A-1427R1

852-205

STATE	PROJ. NO.	SHEET NO.
MO.		228

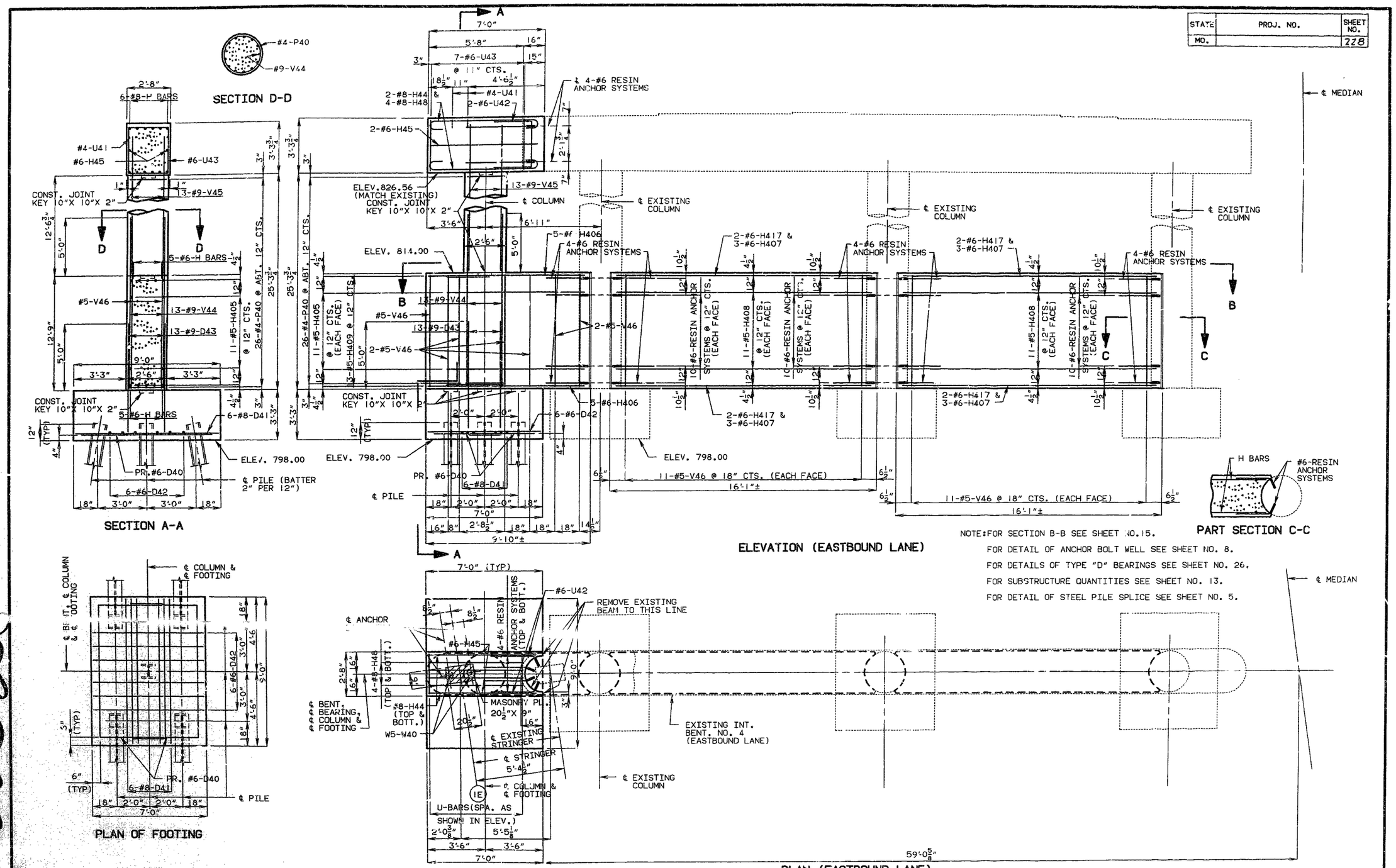

NOTE: FOR SECTION B-B SEE SHEET NO. 15.
FOR DETAIL OF ANCHOR BOLT WELL SEE SHEET NO. 8.
FOR DETAILS OF TYPE "D" BEARINGS SEE SHEET NO. 26.
FOR SUBSTRUCTURE QUANTITIES SEE SHEET NO. 13.
FOR DETAIL OF STEEL PILE SPLICE SEE SHEET NO. 5.

NOTE: ALL REINFORCING BARS IN THE TOPS OF SUBSTRUCTURE BEAMS OR CAPS SHALL BE SPACED TO CLEAR ANCHOR BOLT WELLS FOR BEARINGS BY AT LEAST 1/2".

DETAILED FEB. 1993
CHECKED APR. 1993

DETAILS OF INTERMEDIATE BENT NO. 4 (STAGE 2 CONSTRUCTION)

NOTE: THIS DRAWING IS NOT TO SCALE. FOLLOW DIMENSIONS.

SHEET NO. 14 OF 63.

JACKSON COUNTY

A-1427R1

253206

STATE	PROJ. NO.	SHEET NO.
MO.		229

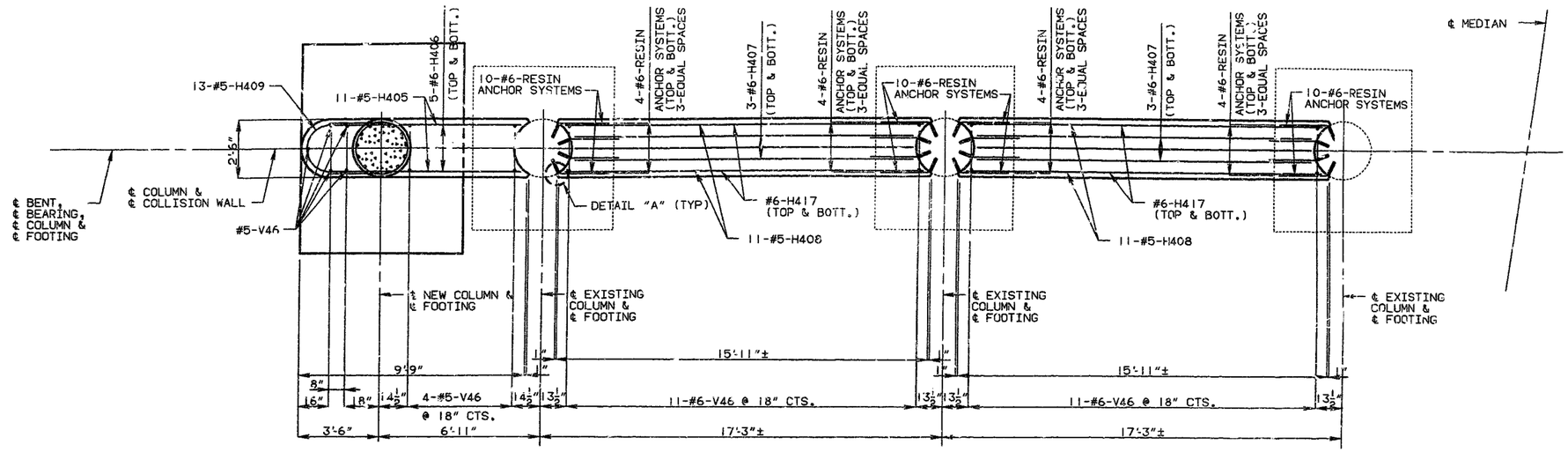

SECTION B-B
(EASTBOUND LANE)

NOTE: FOR LOCATION OF SECTION B-B SEE SHEET NO. 14.
FOR SUBSTRUCTURE QUANTITIES SEE SHEET NO. 13.

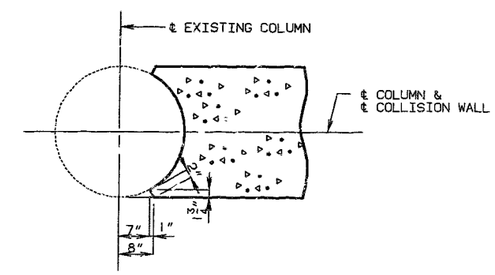

DETAIL "A"

DETAILS OF INTERMEDIATE BENT NO. 4
(STAGE 2 CONSTRUCTION)

DETAILED FEB. 1993
CHECKED APR. 1993

NOTE: THIS DRAWING IS NOT TO SCALE. FOLLOW DIMENSIONS.

JACKSON COUNTY A-1427R1

STATE	PROJ. NO.	SHEET NO.
MO.		230

NOTE: FOR SECTION B-B SEE SHEET NO. 17.
FOR SUBSTRUCTURE QUANTITIES SEE SHEET NO. 13.
FOR DETAIL OF ANCHOR BOLT WELL SEE SHEET NO. 8.
FOR DETAILS OF TYPE "D" BEARINGS SEE SHEET NO. 26.
FOR DETAIL OF STEEL PILE SPLICE SEE SHEET NO. 5.

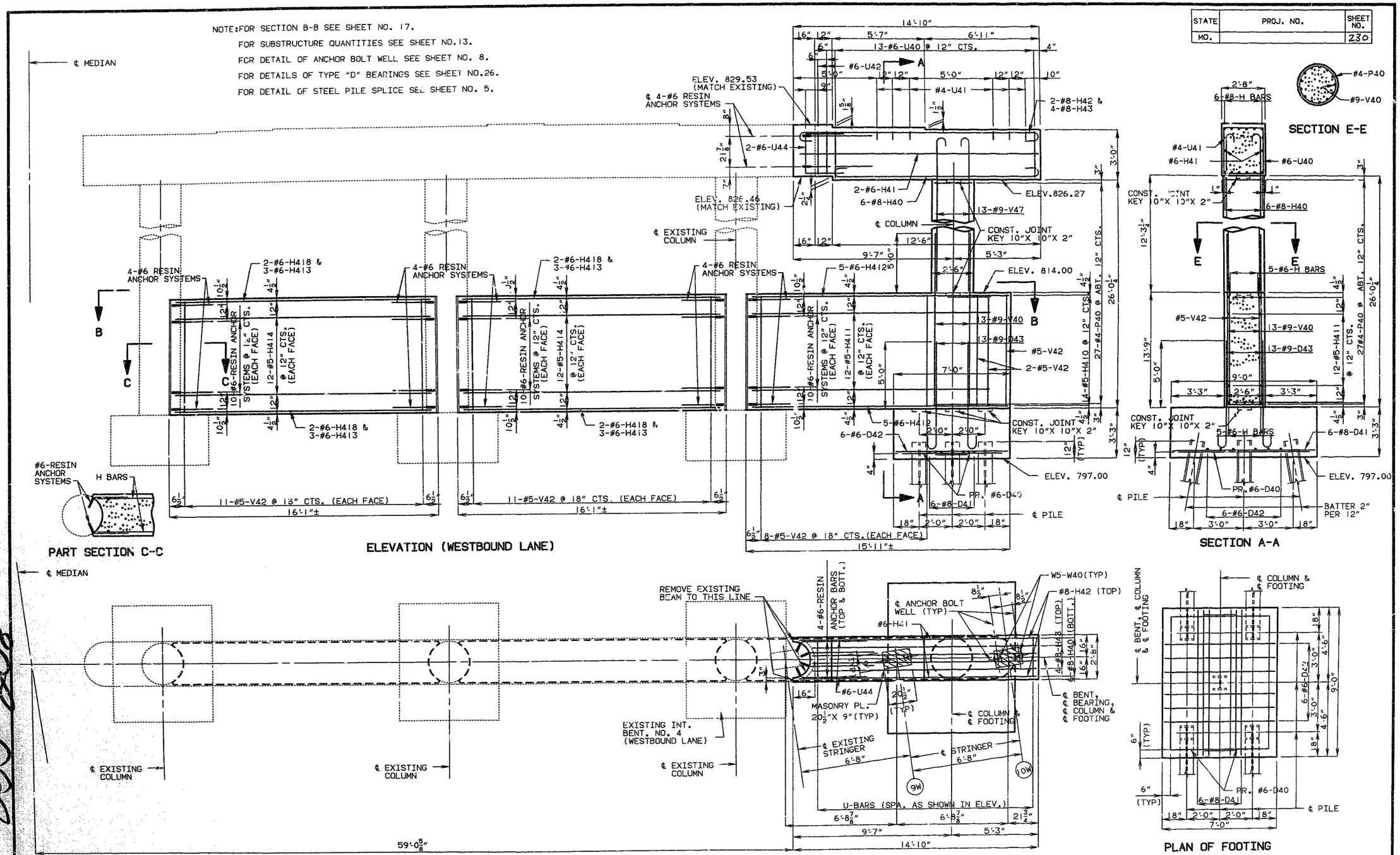

DETAILS OF INTERMEDIATE BENT NO. 4 (STAGE 2 CONSTRUCTION)

NOTE: ALL REINFORCING BARS IN THE TOPS OF SUBSTRUCTURE BEAMS OR CAPS SHALL BE SPACED TO CLEAR ANCHOR BOLT WELLS FOR BEARINGS BY AT LEAST 1/2".

DETAILED FEB. 1993
CHECKED APR. 1993

NOTE: THIS DRAWING IS NOT TO SCALE. FOLLOW DIMENSIONS.

SHEET NO. 16 OF 63.

JACKSON COUNTY

A-1427R1

855 208

STATE	PROJ. NO.	SHEET NO.
MO.		231

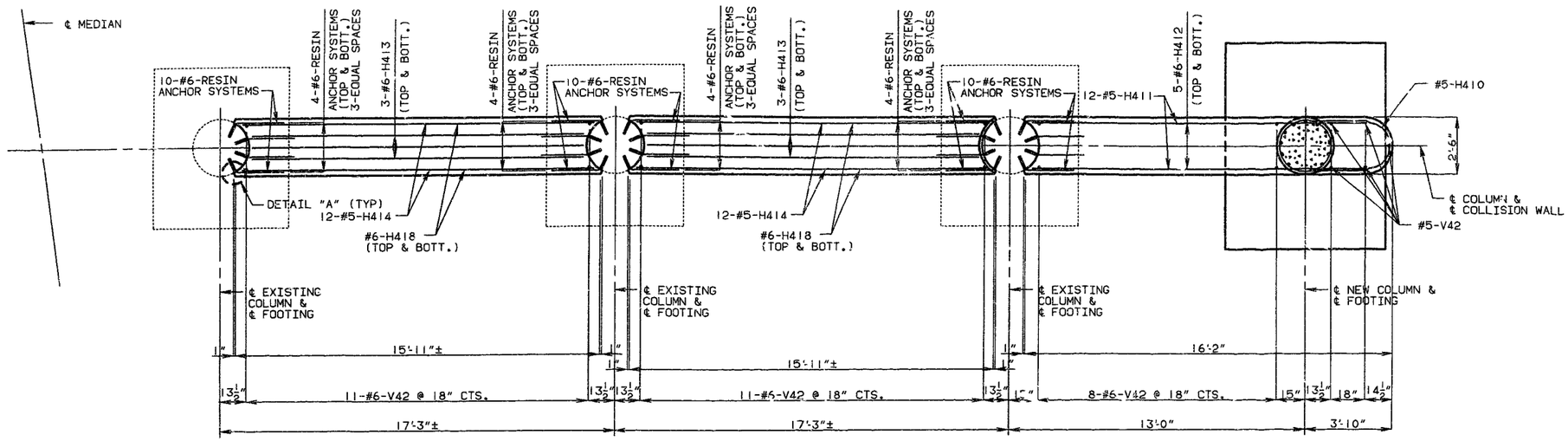

SECTION B-B
(WESTBOUND LANE)

NOTE: FOR LOCATION OF SECTION B-B SEE SHEET NO. 16.
FOR SUBSTRUCTURE QUANTITIES SEE SHEET NO. 13.

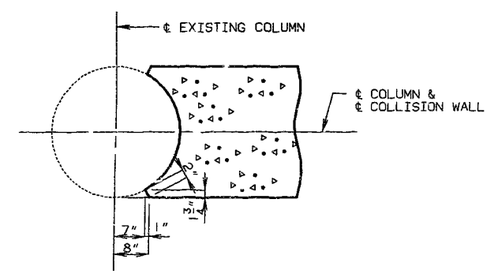

DETAIL "A"

DETAILS OF INTERMEDIATE BENT NO. 4
(STAGE 2 CONSTRUCTION)

DETAILED FEB. 1993
CHECKED APR. 1993

NOTE: THIS DRAWING IS NOT TO SCALE. FOLLOW DIMENSIONS.

JACKSON COUNTY A-1427R1

STATE	PROJ. NO.	SHEET NO.
MO.		232

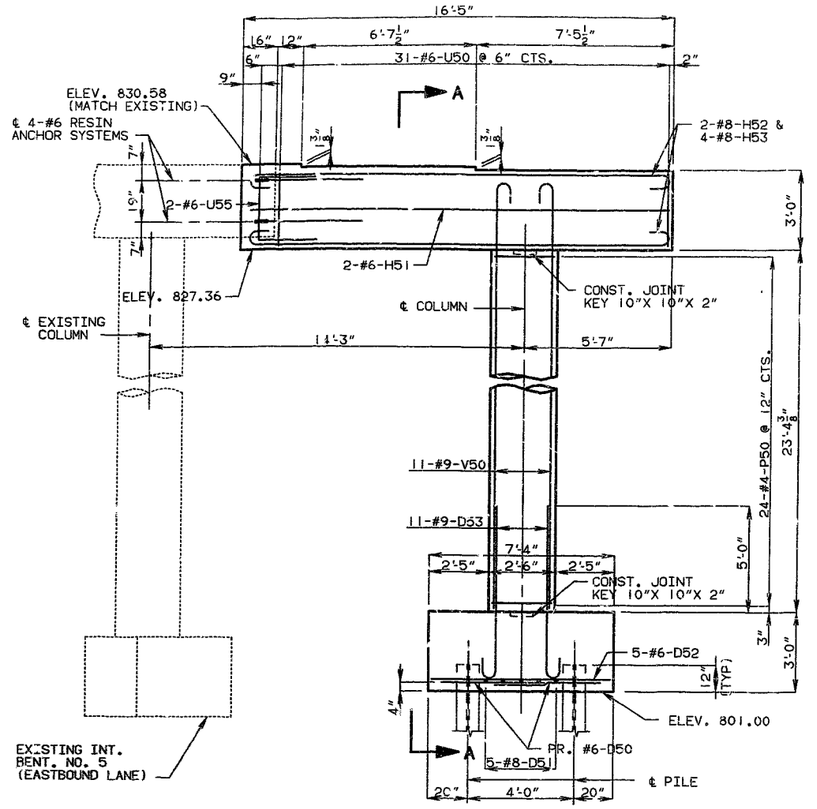

ELEVATION (EASTBOUND LANE)

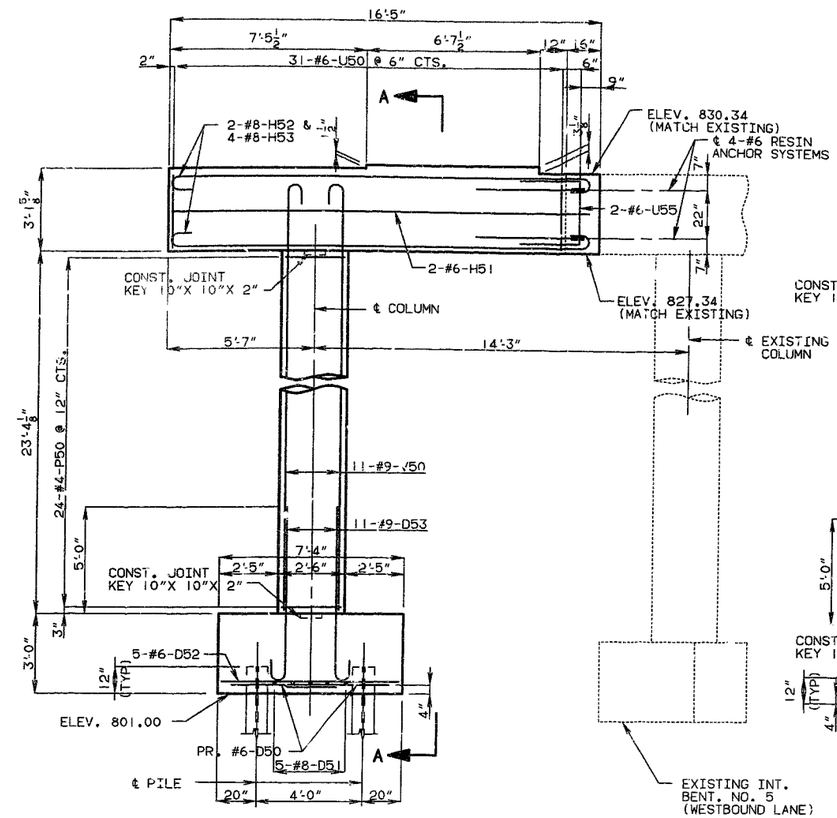

ELEVATION (WESTBOUND LANE)

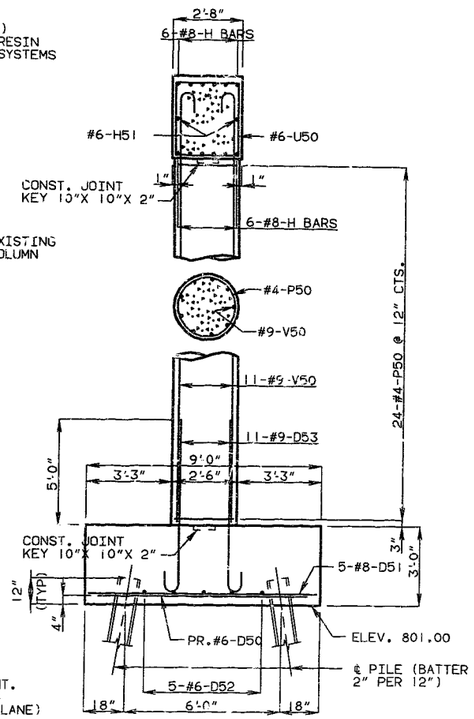

SECTION A-A

NOTE: FOR PLAN OF FOOTING SEE SHEET NO.19.
NOTE FOR DETAIL OF ANCHOR BOLT WELL SEE SHEET NO. 8.
FOR DETAILS OF TYPE "D" BEARINGS SEE SHEET NO.26.
FOR DETAIL OF STEEL PILE SPLICE SEE SHEET NO. 5.

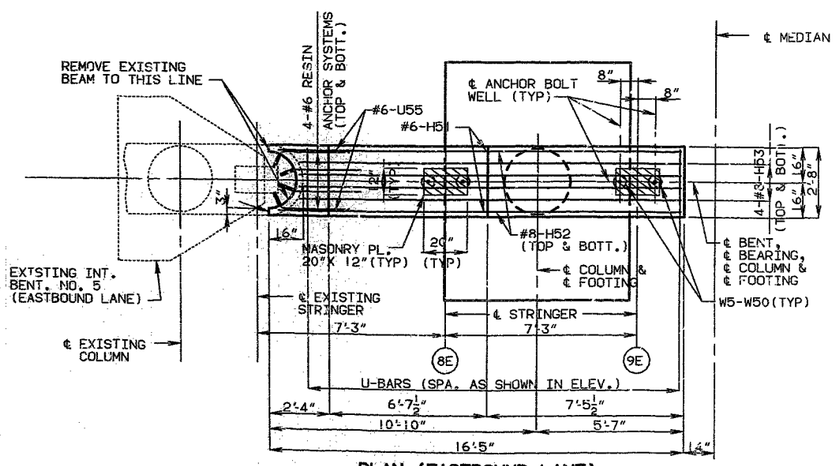

PLAN (EASTBOUND LANE)

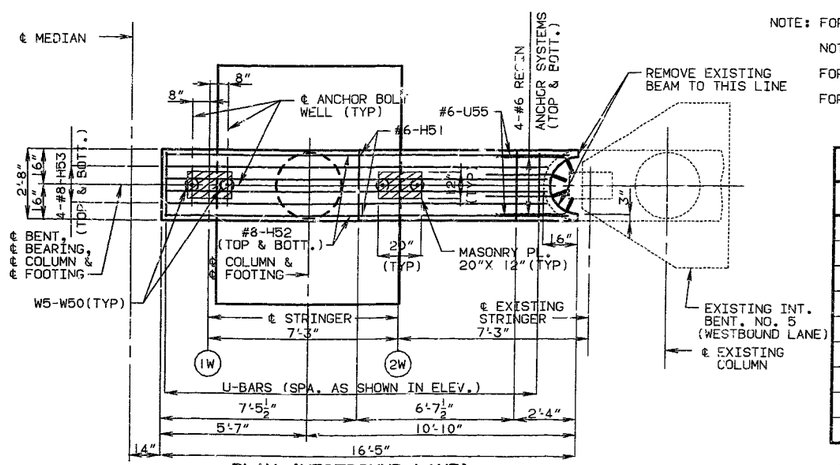

PLAN (WESTBOUND LANE)

SUBSTRUCTURE QUANTITIES

ITEM		QUANTITY
CLASS I EXCAVATION	CU.YD.	160.0
STRUCT. STEEL PILE (10")	LIN.FT.	424
CLASS B CONC.(SUBSTR.)	CU.YD.	77.8
REINF. STEEL	LBS.	11,590

THESE QUANTITIES ARE INCLUDED IN THE ESTIMATED QUANTITIES TABLE ON SHEET NO. 2.

DETAILED NOV. 1992
CHECKED APR. 1993

NOTE: ALL REINFORCING BARS IN THE TOPS OF SUBSTRUCTURE BEAMS OR CAPS SHALL BE SPACED TO CLEAR ANCHOR BOLT WELLS FOR BEARINGS BY AT LEAST 1/2".

NOTE: THIS DRAWING IS NOT TO SCALE. FOLLOW DIMENSIONS.

DETAILS OF INTERMEDIATE BENT NO. 5 (STAGE I CONSTRUCTION)

SHEET NO. 18 OF 63.

JACKSON COUNTY

A-1427R1

20 257

STATE	PROJ. NO.	SHEET NO.
MO.		233

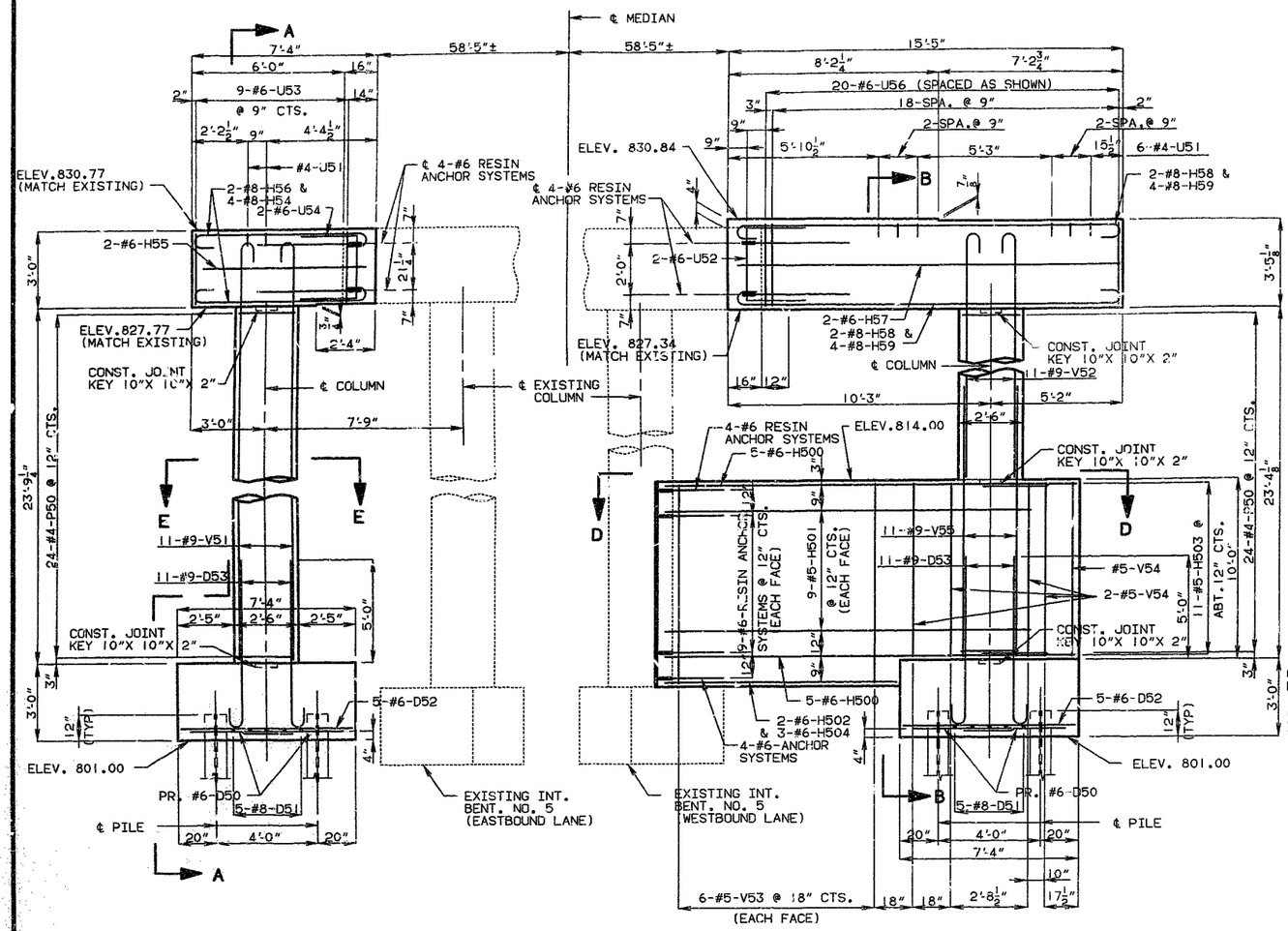

ELEVATION (EASTBOUND LANE)

DEVELOPED ELEVATION (WESTBOUND LANE)

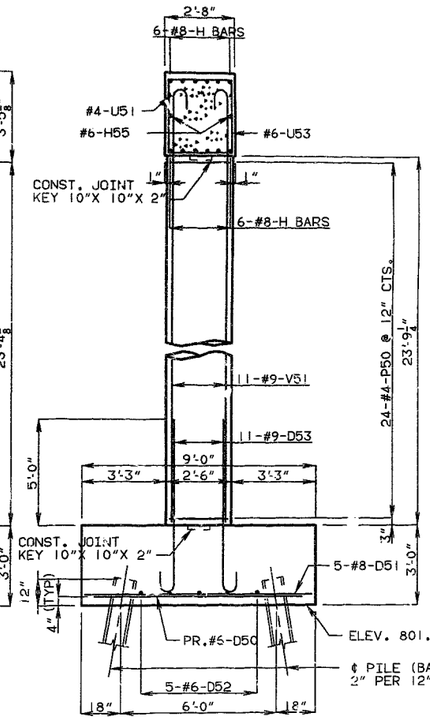

SECTION A-A

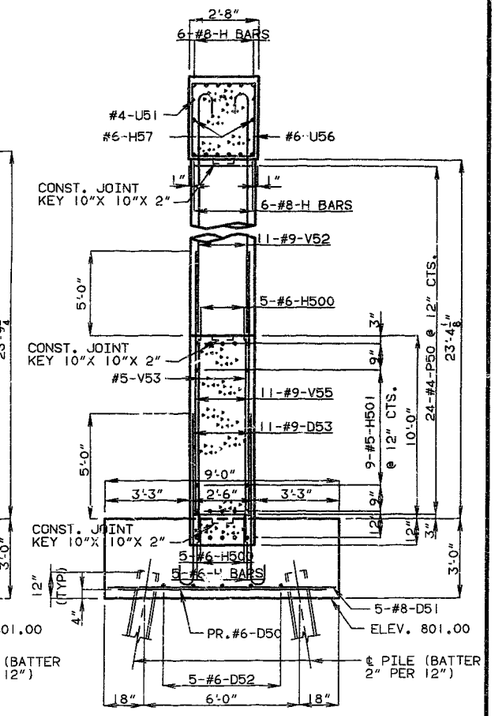

SECTION B-B

NOTE: FOR SECTION D-D AND PLAN OF BEAM SEE SHEET NO. 20.
FOR SUBSTRUCTURE QUANTITIES SEE SHEET NO. 18.
FOR DETAIL OF STEEL PILE SPLICE SEE SHEET NO. 5.

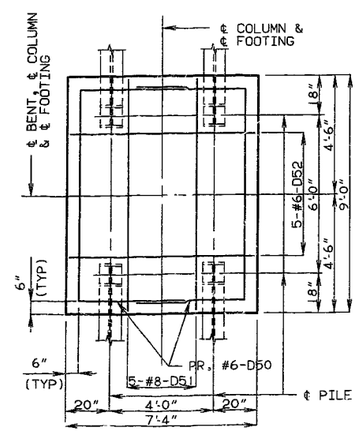

PLAN OF FOOTING

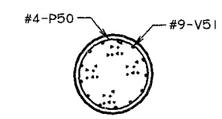

SECTION E-E

DETAILS OF INTERMEDIATE BENT NO. 5
(STAGE 2 CONSTRUCTION)

DETAILED OCT. 1992
CHECKED APR. 1993

NOTE: THIS DRAWING IS NOT TO SCALE. FOLLOW DIMENSIONS.

SHEET NO. 19 OF 63.

JACKSON COUNTY

A-1427R1

233-211

STATE	PROJ. NO.	SHEET NO.
MO.		234

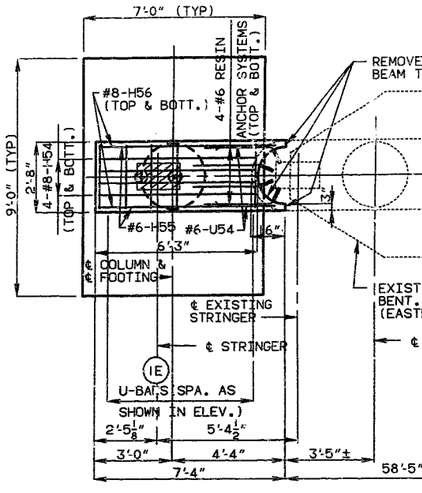

PART PLAN (EASTBOUND LANE)

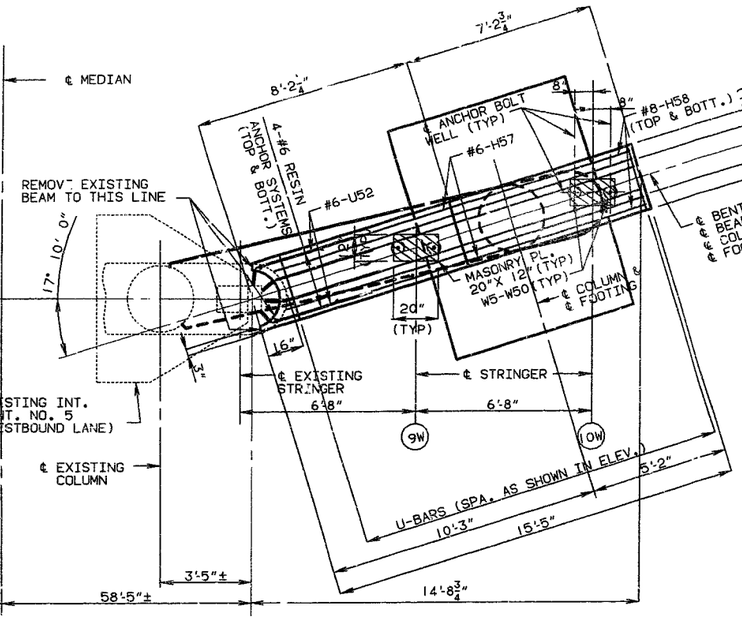

PART PLAN (WESTBOUND LANE)

NOTE: ALL REINFORCING BARS IN THE TOPS OF SUBSTRUCTURE BEAMS OR CAPS SHALL BE SPACED TO CLEAR ANCHOR BOLT WELLS FOR BEARINGS BY AT LEAST 1/2".

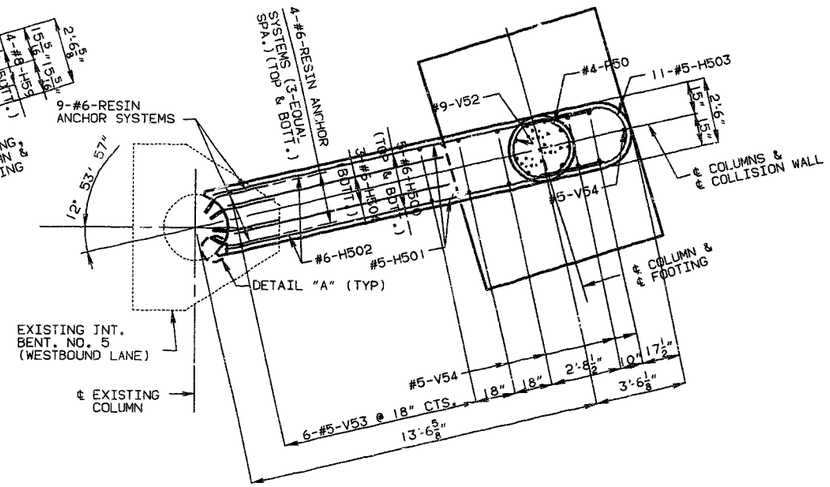

SECTION D-D

NOTE: FOR LOCATION OF SECTION D-D SEE SHEET NO. 19.
FOR DETAIL OF ANCHOR BOLT WELL SEE SHEET NO. 8.
FOR DETAILS OF TYPE "D" BEARINGS SEE SHEET NO. 26.
FOR SUBSTRUCTURE QUANTITIES SEE SHEET NO. 18.

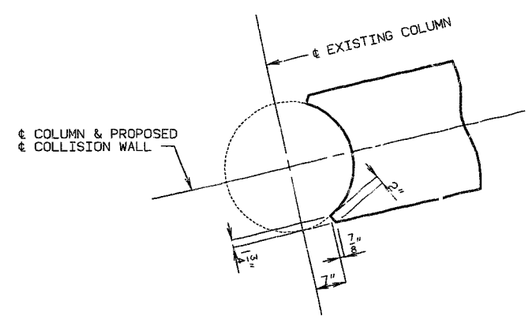

DETAIL "A"

DETAILS OF INTERMEDIATE BENT NO. 5
(STAGE 2 CONSTRUCTION)

DETAILED MAR. 1993
CHECKED APR. 1993

NOTE: THIS DRAWING IS NOT TO SCALE. FOLLOW DIMENSIONS.

JACKSON COUNTY A-1427R1

234

STATE	PROJ. NO.	SHEET NO.
MO.		235

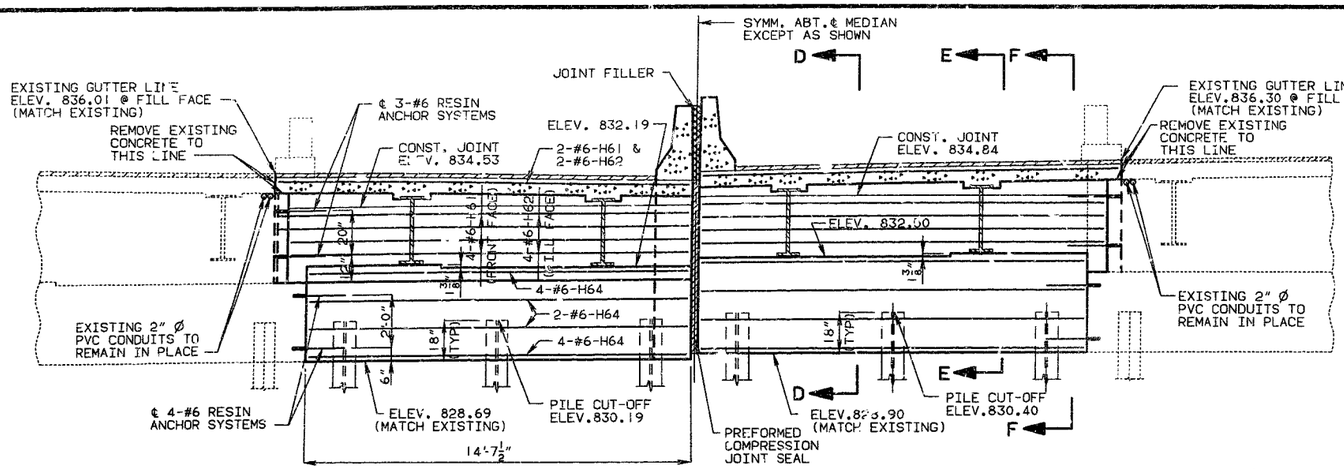

PART SECTION NEAR END BENT (EASTBOUND LANE)

PART SECTION NEAR END BENT (WESTBOUND LANE)

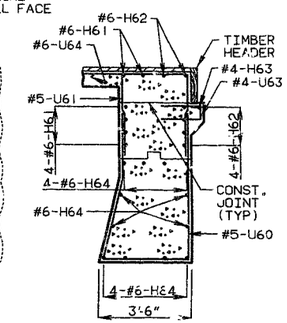

SECTION D-D

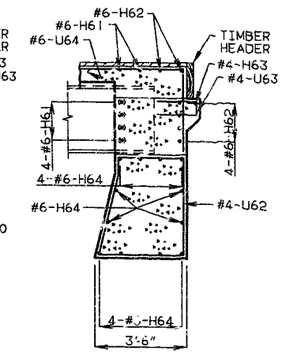

SECTION E-E

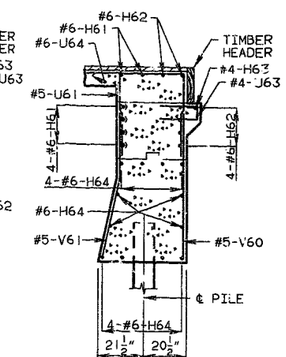

SECTION F-F

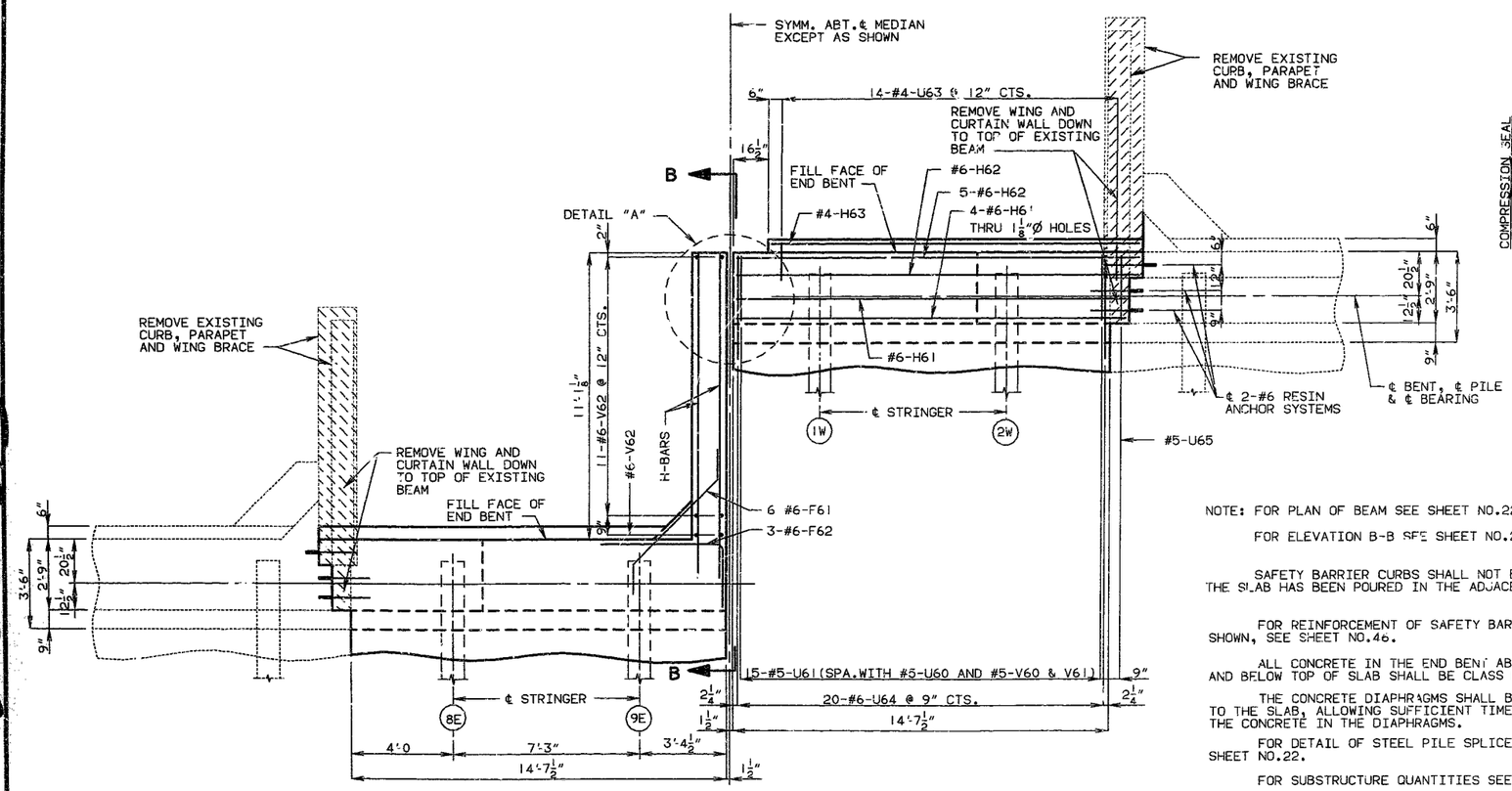

PART PLAN (EASTBOUND LANE)

PART PLAN (WESTBOUND LANE)

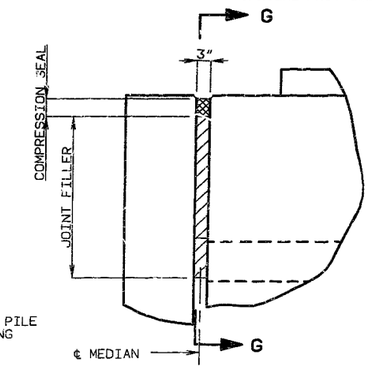

DETAIL A

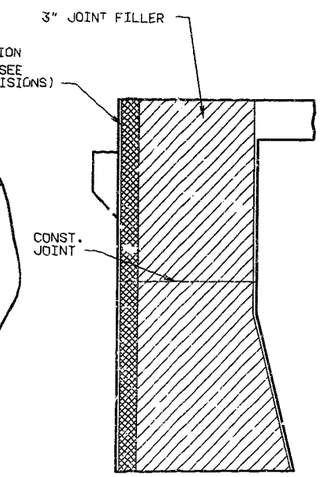

SECTION G-G

NOTE: FOR PLAN OF BEAM SEE SHEET NO.22.

FOR ELEVATION B-B SEE SHEET NO.25.

SAFETY BARRIER CURBS SHALL NOT BE POURED UNTIL THE SLAB HAS BEEN POURED IN THE ADJACENT SPAN.

FOR REINFORCEMENT OF SAFETY BARRIER CURB NOT SHOWN, SEE SHEET NO.46.

ALL CONCRETE IN THE END BENT ABOVE TOP OF BEAM AND BELOW TOP OF SLAB SHALL BE CLASS B2.

THE CONCRETE DIAPHRAGMS SHALL BE POURED PRIOR TO THE SLAB, ALLOWING SUFFICIENT TIME FOR THE SET OF THE CONCRETE IN THE DIAPHRAGMS.

FOR DETAIL OF STEEL PILE SPLICE AND KEY DETAIL SEE SHEET NO.22.

FOR SUBSTRUCTURE QUANTITIES SEE SHEET NO.22.

THE AREA EXPOSED BY THE REMOVAL OF CONCRETE AND NOT COVERED BY NEW CONCRETE SHALL BE COATED WITH AN APPROVED BITUMINOUS PAINT.

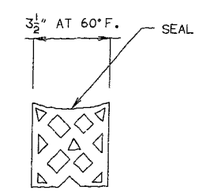

PART CROSS SECTION THRU COMP. JOINT SEAL

NOTE: DEPTH OF SEAL SHALL NOT BE LESS THAN WIDTH OF SEAL.
SEE SPECIAL PROVISIONS FOR REQUIREMENTS OF COMPRESSION JOINT SEAL.

DETAILS OF END BENT NO. 6 (STAGE I CONSTRUCTION)

DETAILED SEPT. 1992
CHECKED MAR. 1993

NOTE: THIS DRAWING IS NOT TO SCALE. FOLLOW DIMENSIONS.

SHEET NO. 21 OF 63.

JACKSON COUNTY A-1427R1

260 213

STATE	PROJ. NO.	SHEET NO.
MO.		236

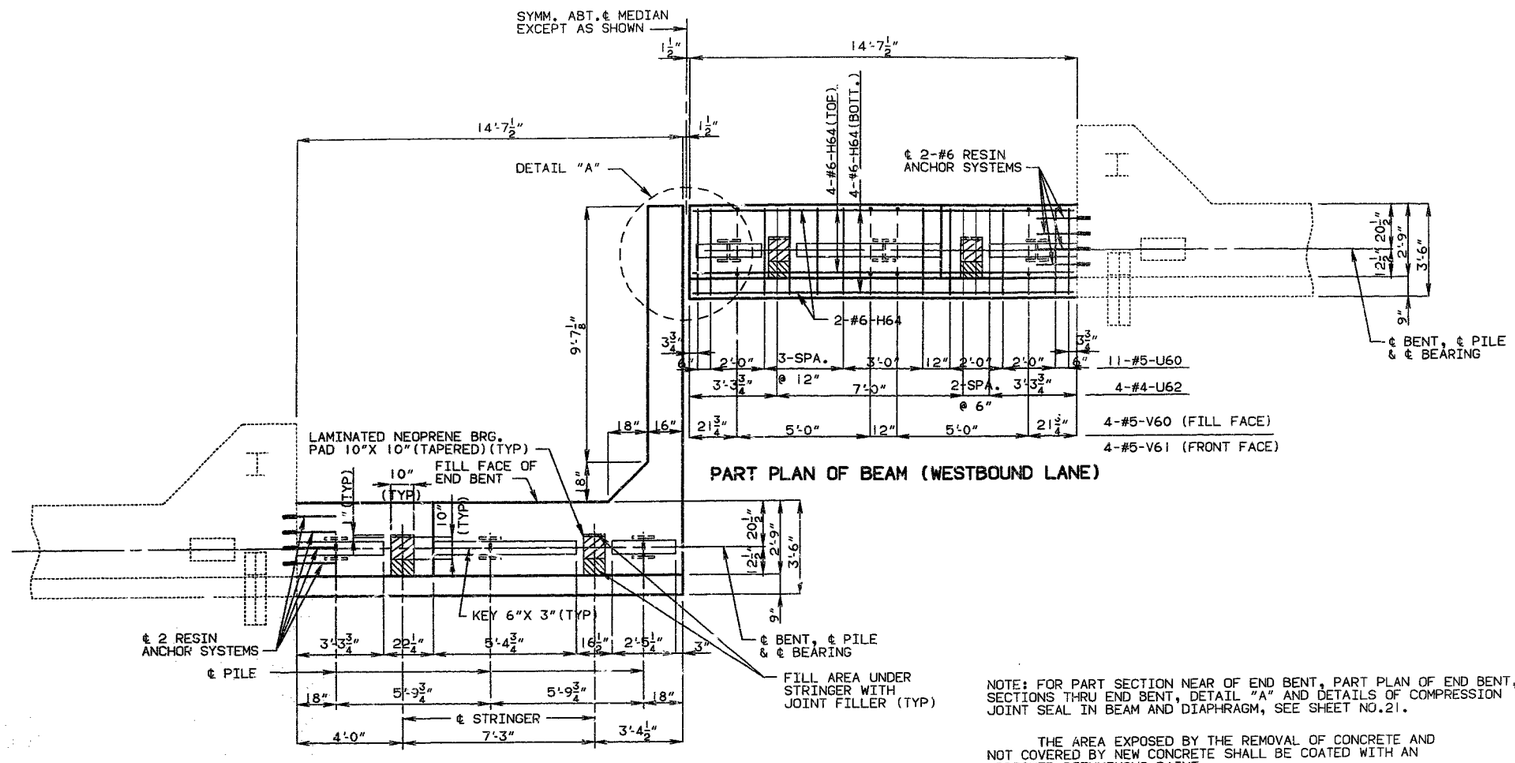

PART PLAN OF BEAM (WESTBOUND LANE)

PART PLAN OF BEAM (EASTBOUND LANE)

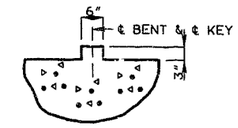

SECTION THRU KEY

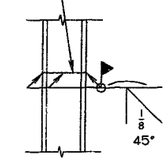

DETAIL OF STEEL PILE SPLICE

NOTE: FOR PART SECTION NEAR OF END BENT, PART PLAN OF END BENT, SECTIONS THRU END BENT, DETAIL "A" AND DETAILS OF COMPRESSION JOINT SEAL IN BEAM AND DIAPHRAGM, SEE SHEET NO.21.

THE AREA EXPOSED BY THE REMOVAL OF CONCRETE AND NOT COVERED BY NEW CONCRETE SHALL BE COATED WITH AN APPROVED BITUMINOUS PAINT.

SUBSTRUCTURE QUANTITIES

ITEM		QUANTITY
CLASS I EXCAVATION	CU.YD.	40.0
STRUCT. STEEL PILE (10")	LIN.FT.	385
CLASS B CONC.(SUBSTR.)	CU.YD.	25.8

THESE QUANTITIES ARE INCLUDED IN THE ESTIMATED QUANTITIES TABLE ON SHEET NO. 2.

DETAILED SEPT. 1992
CHECKED MAR. 1993

NOTE: THIS DRAWING IS NOT TO SCALE. FOLLOW DIMENSIONS.

DETAILS OF END BENT NO. 6 (STAGE I CONSTRUCTION)

JACKSON COUNTY A-1427R1

236-214

STATE	PROJ. NO.	SHEET NO.
MD.		237

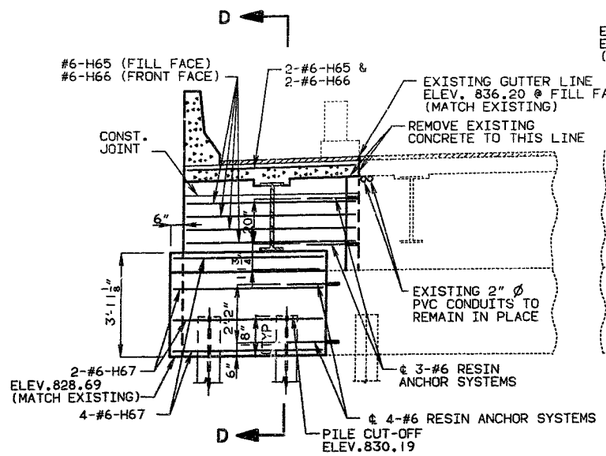

PART SECTION NEAR END BENT
(EASTBOUND LANE)

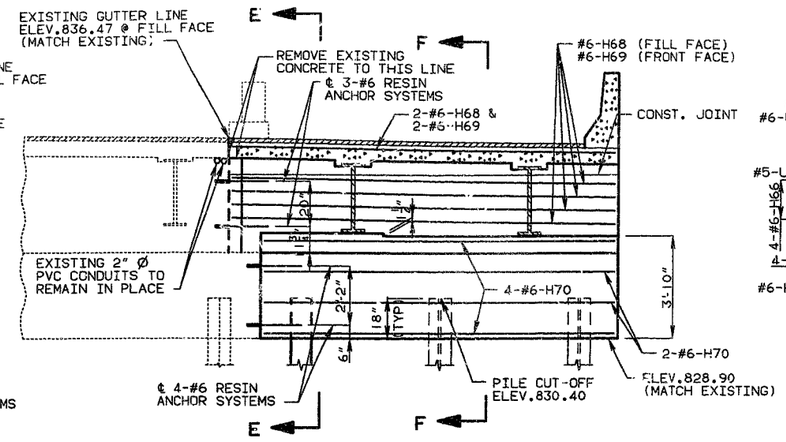

PART SECTION NEAR END BENT
(WESTBOUND LANE)

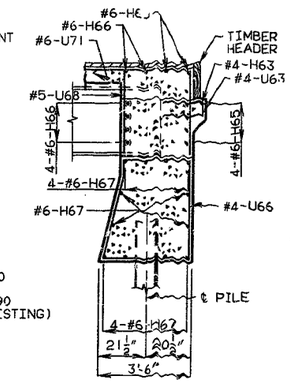

SECTION D-D

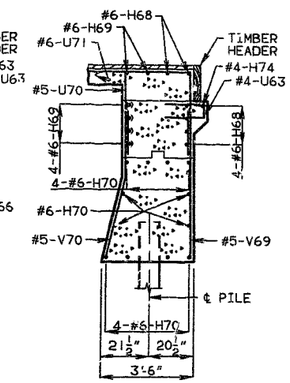

SECTION E-E

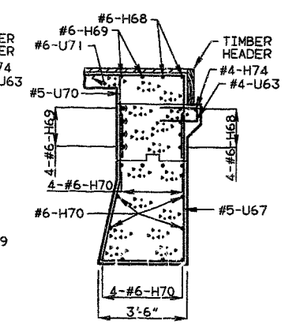

SECTION F-F

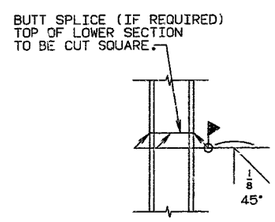

DETAIL OF STEEL
PILE SPLICE

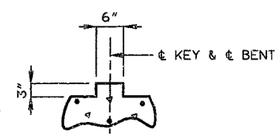

DETAIL OF KEY

NOTE: FOR PLAN OF END BENTS SEE SHEET NO.24.

FOR DETAILS OF WINGS SEE SHEET NO.25.

FOR REINFORCEMENT OF SAFETY BARRIER CURB NOT SHOWN, SEE SHEETS NO. 47 & 48.

ALL CONCRETE IN THE END BENT ABOVE TOP OF BEAM AND BELOW TOP OF SLAB SHALL BE CLASS B2.

THE CONCRETE DIAPHRAGMS SHALL BE POURED PRIOR TO THE SLAB, ALLOWING SUFFICIENT TIME FOR THE SET OF THE CONCRETE IN THE DIAPHRAGMS.

FOR SUBSTRUCTURE QUANTITIES SEE SHEET NO. 22.

THE AREA EXPOSED BY THE REMOVAL OF CONCRETE AND NOT COVERED BY NEW CONCRETE SHALL BE COATED WITH AN APPROVED BITUMINOUS PAINT.

DETAILS OF END BENT NO. 6
(STAGE 2 CONSTRUCTION)

DETAILED OCT. 1992
CHECKED MAR. 1993

NOTE: THIS DRAWING IS NOT TO SCALE. FOLLOW DIMENSIONS.

JACKSON COUNTY

A-1427R1

262 215

STATE	PROJ. NO.	SHEET NO.
MO.		238

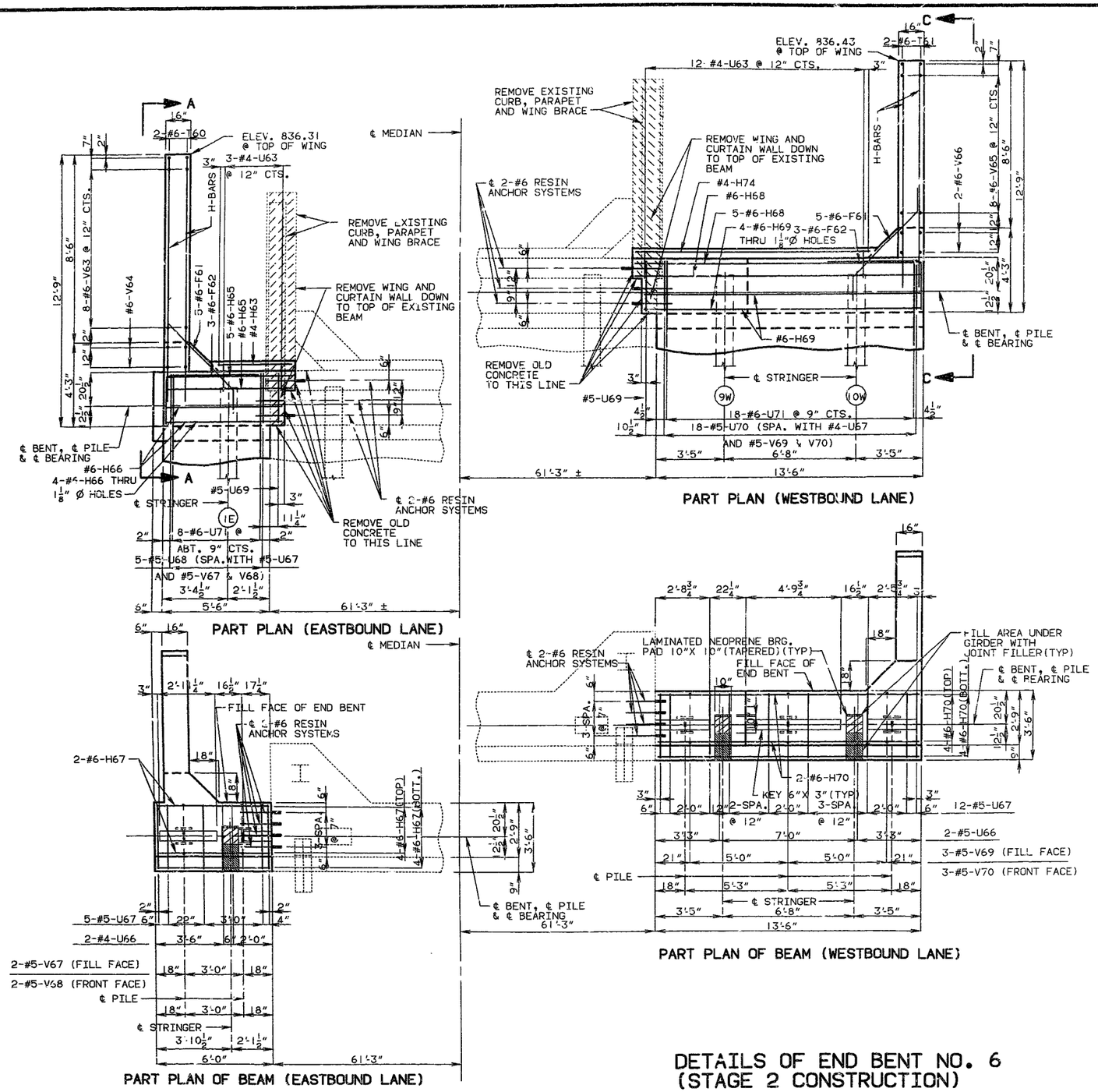

DETAILS OF END BENT NO. 6
(STAGE 2 CONSTRUCTION)

NOTE: FOR PART SECTION NEAR END BENT, SEE SHEET NO.23.

FIELD BENDING SHALL BE REQUIRED AT WINGS FOR F63 & F64 BARS WHEN NECESSARY TO CONFORM TO SLOPE OF WING.

FOR REINFORCEMENT OF SAFETY BARRIER CURB NOT SHOWN, SEE SHEETS NO. 47 & 48 .

ALL CONCRETE IN THE END BENT ABOVE TOP OF BEAM AND BELOW TOP OF SLAB SHALL BE CLASS B2.

THE CONCRETE DIAPHRAGMS SHALL BE POURED PRIOR TO THE SLAB, ALLOWING SUFFICIENT TIME FOR THE SET OF THE CONCRETE IN THE DIAPHRAGMS.

FOR DETAIL OF STEEL PILE SPLICE AND KEY DETAIL SEE SHEET NO. 23.

FOR SUBSTRUCTURE QUANTITIES SEE SHEET NO.22.

THE AREA EXPOSED BY THE REMOVAL OF CONCRETE AND NOT COVERED BY NEW CONCRETE SHALL BE COATED WITH AN APPROVED BITUMINOUS PAINT.

DETAILED SEPT. 1992
CHECKED MAR. 1993

NOTE: THIS DRAWING IS NOT TO SCALE. FOLLOW DIMENSIONS.

JACKSON COUNTY A-1427R1

STATE	PROJ. NO.	SHEET NO.
MO.		239

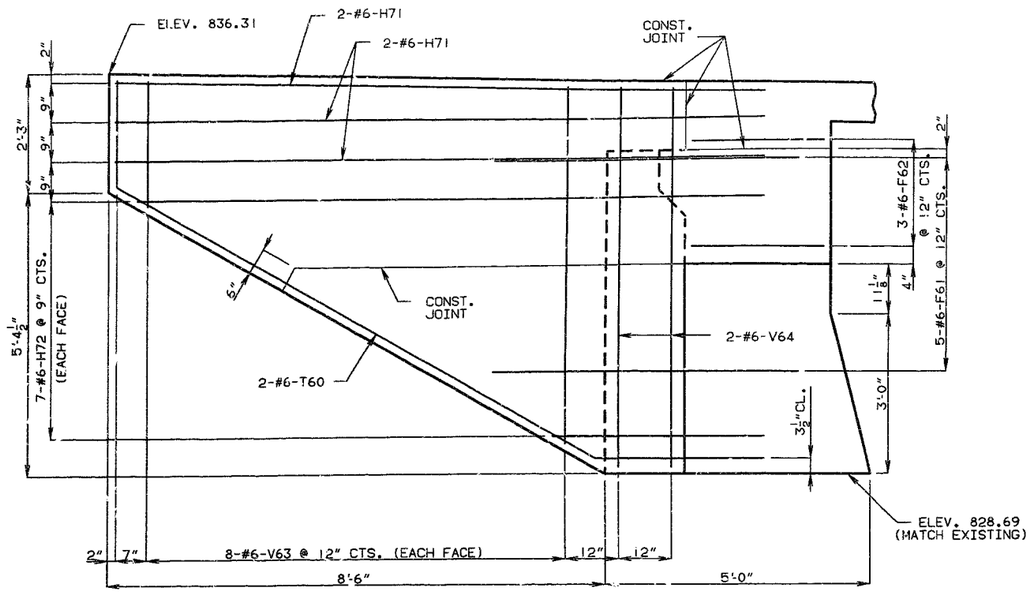

ELEVATION A-A
(STAGE 2 CONSTRUCTION) (EASTBOUND LANE)

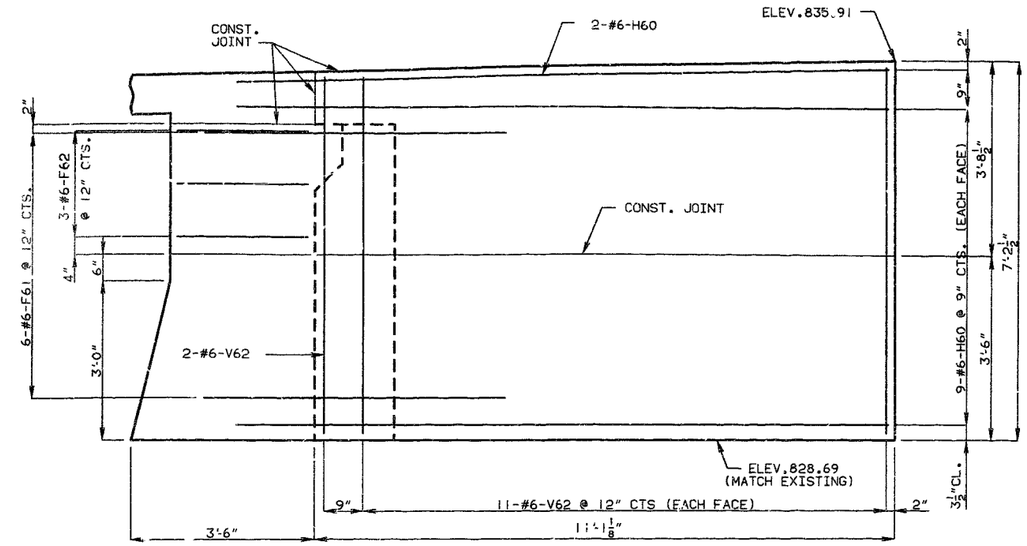

ELEVATION B-B
(STAGE 1 CONSTRUCTION) (EASTBOUND LANE)

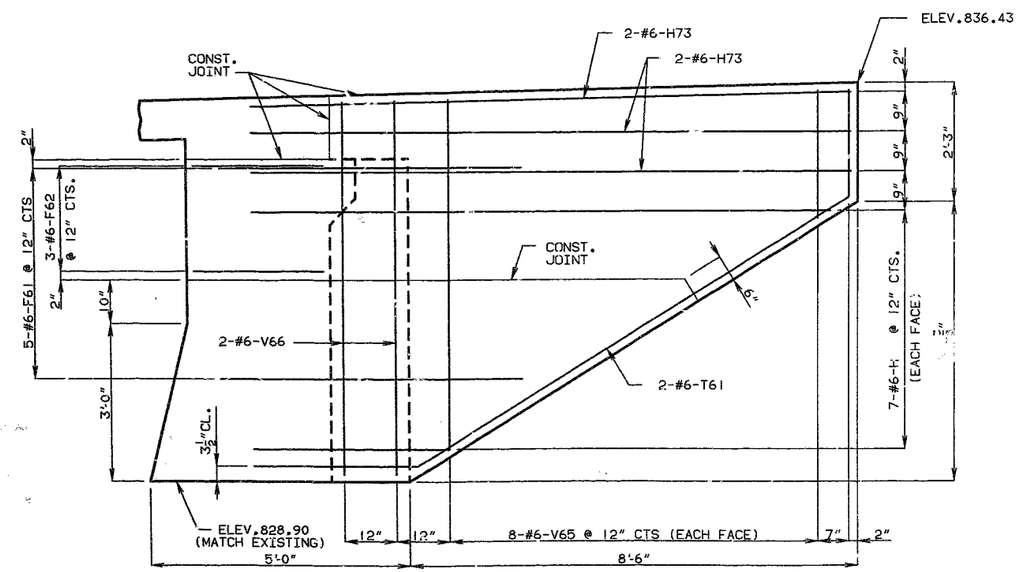

ELEVATION C-C
(STAGE 2 CONSTRUCTION) (WESTBOUND LANE)

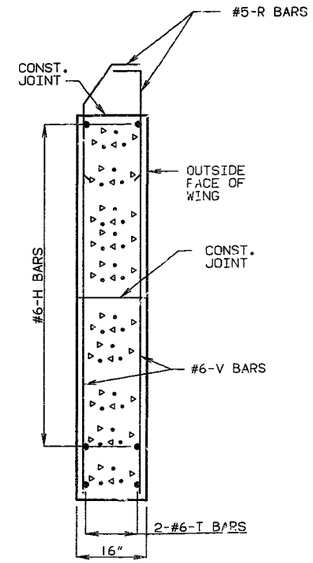

SECTION THRU WING

NOTE: FOR LOCATION OF ELEVATIONS A-A & C-C SEE SHEET NO. 24.
FOR LOCATION OF ELEVATION B-B SEE SHEET NO. 21.
FOR SUBSTRUCTURE QUANTITIES SEE SHEET NO. 22.

DETAILS OF WINGS AT END BENT NO. 6

DETAILED SEPT. 1992
CHECKED MAR. 1993

NOTE: THIS DRAWING IS NOT TO SCALE. FOLLOW DIMENSIONS.

JACKSON COUNTY A-1427R1

266 317

STATE	PROJ. NO.	SHEET NO.
MO.		240

NOTES:

ANCHOR BOLTS FOR TYPE 'D' BEARINGS SHALL BE 1-1/2" Ø A588 STEEL SWEDGED BOLTS AND SHALL EXTEND 15" INTO THE CONCRETE WITH A194 - 2, 2H OR A563 - C, C3, D, DH, DH3 HEAVY HEXAGON NUTS.

ACTUAL MANUFACTURER'S CERTIFIED MILL TEST REPORTS (CHEMICAL AND MECHANICAL) SHALL BE PROVIDED.

USE F436 HARDENED WASHERS FOR THE FIXED BEARINGS AND NO HEAVY HEXAGON NUTS OR HARDENED WASHERS FOR THE EXPANSION BEARINGS. (SWEDGING SHALL BE 1" LESS THAN EXTENSION INTO THE CONCRETE.)

ANCHOR BOLTS, HARDENED WASHERS AND HEAVY HEXAGON NUTS SHALL BE PAINTED WITH 2 COATS (5 MILS MINIMUM) OF INORGANIC ZINC. WELD AREAS TO BE TOUCHED UP AFTER ASSEMBLY.

WEIGHT OF THE ANCHOR BOLTS, HARDENED WASHERS AND HEAVY HEXAGON NUTS FOR BEARINGS SHALL BE INCLUDED IN THE WEIGHT OF THE FABRICATED STRUCTURAL STEEL.

INDICATES MACHINE FINISH SURFACE.

SHOP DRAWINGS ARE NOT REQUIRED FOR THE LEAD PLATES AND/OR THE PREFORMED FABRIC PADS.

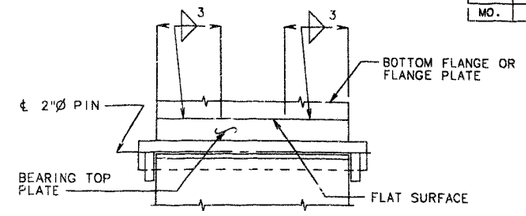

WELDING DETAILS

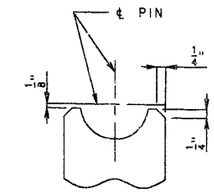

END VIEW OF WEB

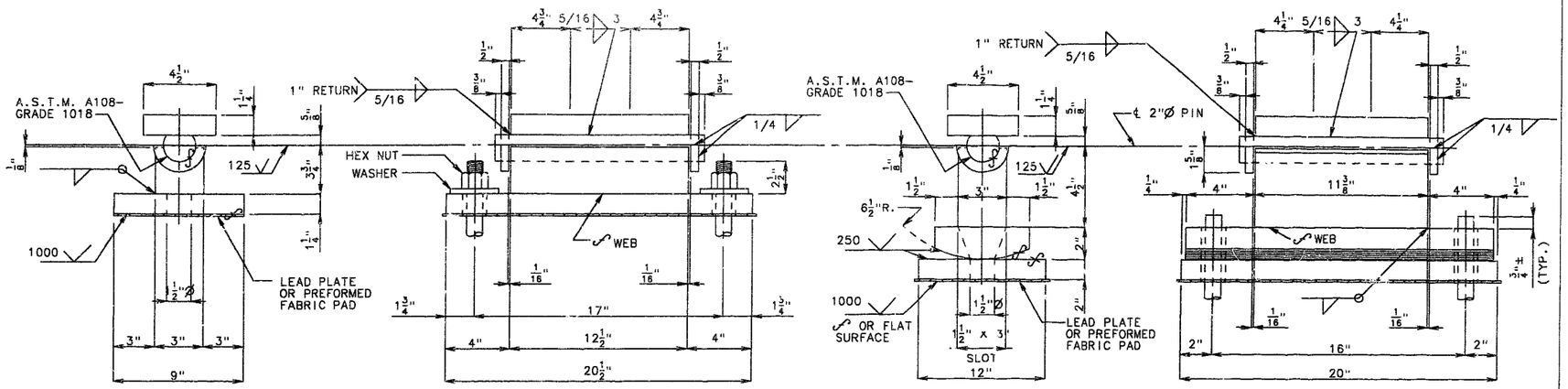

FIXED

REQUIRED: 7 @ BT. NO. 3
7 @ BT. NO. 4

EXPANSION

REQUIRED: 7 @ BT. NO. 2
7 @ BT. NO. 5

TYPE 'D' BEARINGS

(ESTIMATED WEIGHT 6,020 LBS.)

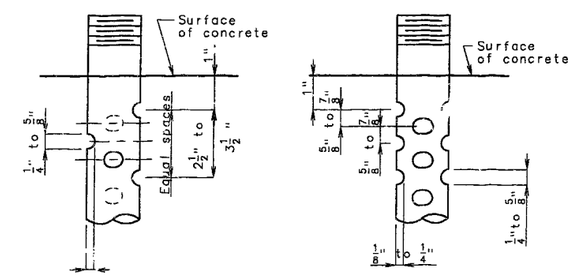

DETAIL FOR ¾" Ø THRU 2½" Ø ANCHOR BOLTS

OPTIONAL DETAIL FOR 1⅜" Ø THRU 2½" Ø ANCHOR BOLTS

SWEDGE ANCHOR BOLT DETAILS

565 218

BRG 'D', BRG3.31, STL. A	
STD. D. BRG.	REVISED
FEB. 1965	FEB. 1989

DETAILED MAR. 1993
CHECKED APR. 1993

NOTE: THIS DRAWING IS NOT TO SCALE. FOLLOW DIMENSIONS.

JACKSON COUNTY A1427R1

STATE	PROJ. NO.	SHEET NO.
MO.		241

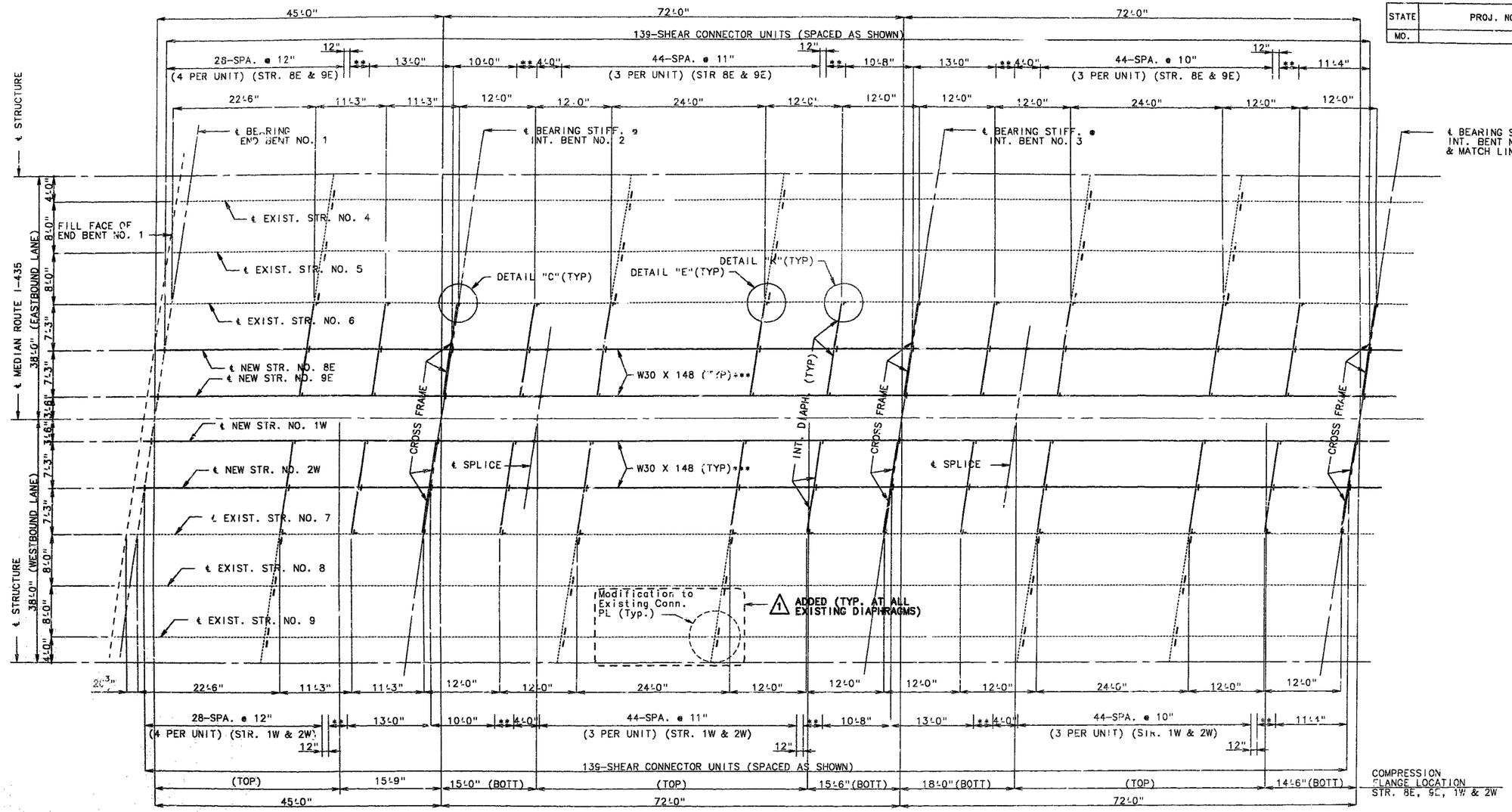

1 DRILL 13/16" HOLE THRU EXISTING ANGLES TO MATCH HOLES IN NEW STEEL. TIGHTEN BOLTS TO SNUG FIT BEFORE SLAB IS POURED, TORQUE AFTER SLAB IS POURED. EXISTING HOLES MAY BE USED WHERE POSSIBLE.

COST OF DRILLING HOLES IN EXISTING STRUCTURAL STEEL SHALL BE INCLUDED IN UNIT PRICE BID FOR STRUCTURAL CARBON STEEL.

PLAN OF STRUCTURAL STEEL (STAGE 1 CONSTRUCTION)

NOTE: DIMENSIONS SHOWN ARE HORIZONTAL DIMENSIONS AT BOTTOM OF BOTTOM FLANGE.

NOTE: INTERMEDIATE DIAPHRAGMS AND CROSS FRAMES SHALL BE PLACED AS SHOWN IN PLAN OF STRUCTURAL STEEL.

FOR DETAILS OF MODIFICATIONS TO EXISTING CONN. PLATES SEE DETAILS "L" & "J" ON SHEET NO. 32.

1 ADDED

** 3-SPA. @ 12" (4 PER UNIT)

*** NOTCH TOUGHNESS IS REQUIRED FOR ALL WIDE FLANGE BEAMS.

NOTE: FOR PLACEMENT OF SHEAR CONNECTORS ON ALL STRINGERS SEE SHEET NO.32.

FOR LOCATION OF SLAB DRAINS SEE SHEET NO.45.

FOR DETAILS OF DIAPHRAGMS AND CROSS FRAMES SEE SHEET NO.31.

FOR DETAILS "C", "E" & "K" SEE SHEET NO.32.

ALL FABRICATED STRUCTURAL STEEL SHALL BE A36, EXCEPT WIDE FLANGE BEAMS SHALL BE A572.

1 REVISED: MAY 12, 1994

DETAILED MAR. 1993
CHECKED APR. 1993

NOTE: THIS DRAWING IS NOT TO SCALE. FOLLOW DIMENSIONS.

SHEET NO. 27 OF 63.

JACKSON COUNTY

A-1427R1

219

STATE	PROJ. NO.	SHEET NO.
MO.		242

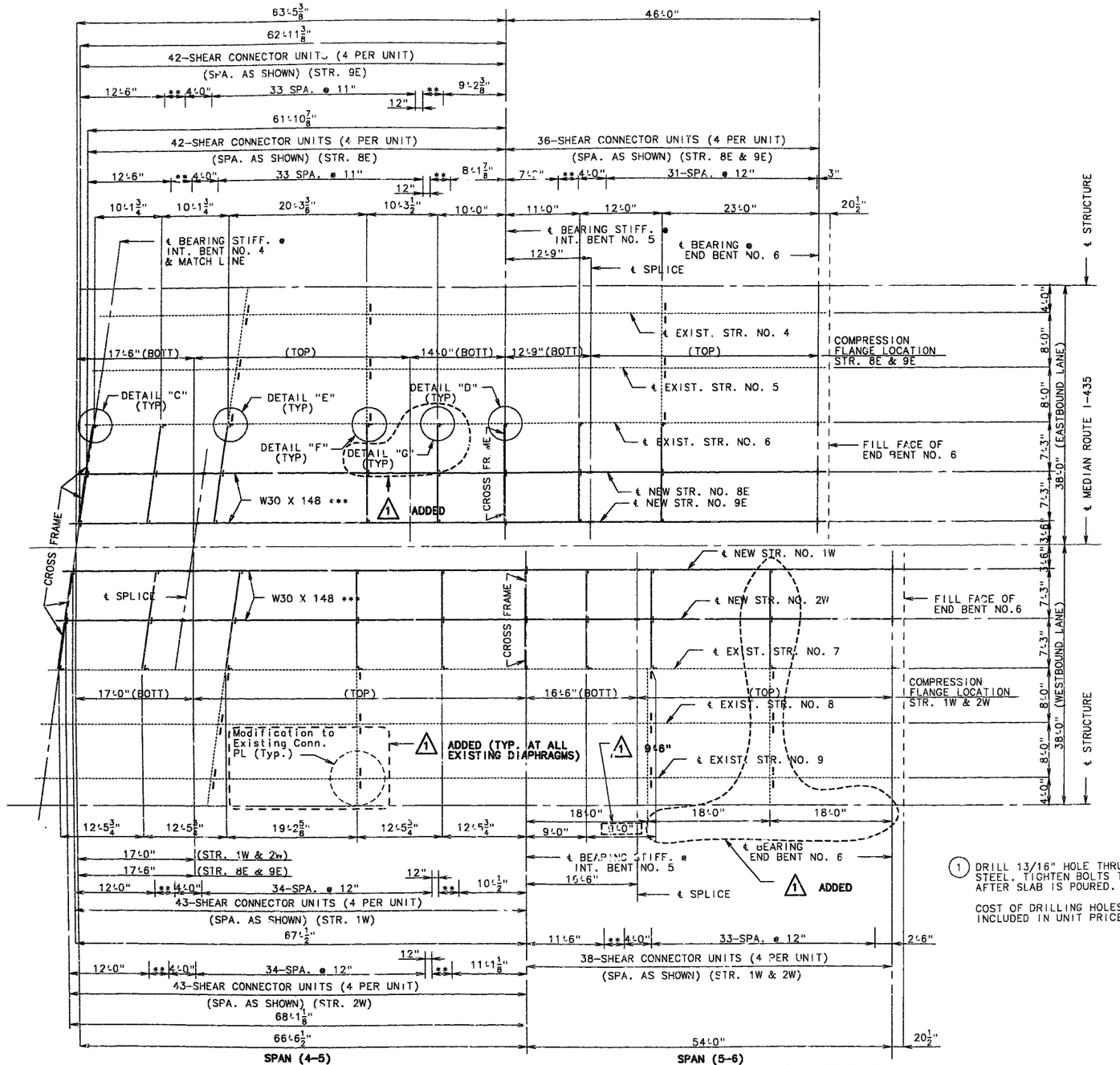

NOTE: INTERMEDIATE DIAPHRAGMS AND CROSS FRAMES SHALL BE PLACED AS SHOWN IN PLAN OF STRUCTURAL STEEL.

FOR DETAILS OF MODIFICATIONS TO EXISTING CONN. PLATES SEE DETAILS "L" & "J" ON SHEET NO. 32. ADDED

(1) DRILL 13/16" HOLE THRU EXISTING ANGLES TO MATCH HOLES IN NEW STEEL. TIGHTEN BOLTS TO SNUG FIT BEFORE SLAB IS POURED. TORQUE AFTER SLAB IS POURED. EXISTING HOLES MAY BE USED WHERE POSSIBLE.

COST OF DRILLING HOLES IN EXISTING STRUCTURAL STEEL SHALL BE INCLUDED IN UNIT PRICE BID FOR STRUCTURAL CARBON STEEL.

* LEGS OF NEW 4 X 4 X 3/8 ANGLES AND BENT PLATES SHALL BE TURNED OPPOSITE TO LEGS OF EXISTING ADJACENT ANGLES.

PLAN OF STRUCTURAL STEEL (STAGE 1 CONSTRUCTION)

** 3-SPA. @ 12" (4 PER UNIT)

*** NOTCH TOUGHNESS IS REQUIRED FOR ALL WIDE FLANGE BEAMS.

NOTE: FOR PLACEMENT OF SHEAR CONNECTORS ON ALL STRINGERS SEE SHEET NO.32.

FOR LOCATION OF SLAB DRAINS SEE SHEET NO.45.

FOR DETAILS OF DIAPHRAGMS AND CROSS FRAMES SEE SHEET NO.31.

FOR DETAILS "C", "D", "E" & "F" SEE SHEET NO.32.

ALL FABRICATED STRUCTURAL STEEL SHALL BE A36, EXCEPT WIDE FLANGE BEAMS SHALL BE A572.

NOTE: DIMENSIONS SHOWN ARE HORIZONTAL DIMENSIONS AT BOTTOM OF BOTTOM FLANGE.

NOTE: THIS DRAWING IS NOT TO SCALE. FOLLOW DIMENSIONS.

DETAILED MAR. 1993
CHECKED APR. 1993

REVISED: MAY 12, 1994

SHEET NO. 28 OF 63.

JACKSON COUNTY

A-1427R1

228

STATE	PROJ. NO.	SHEET NO.
MO.		243

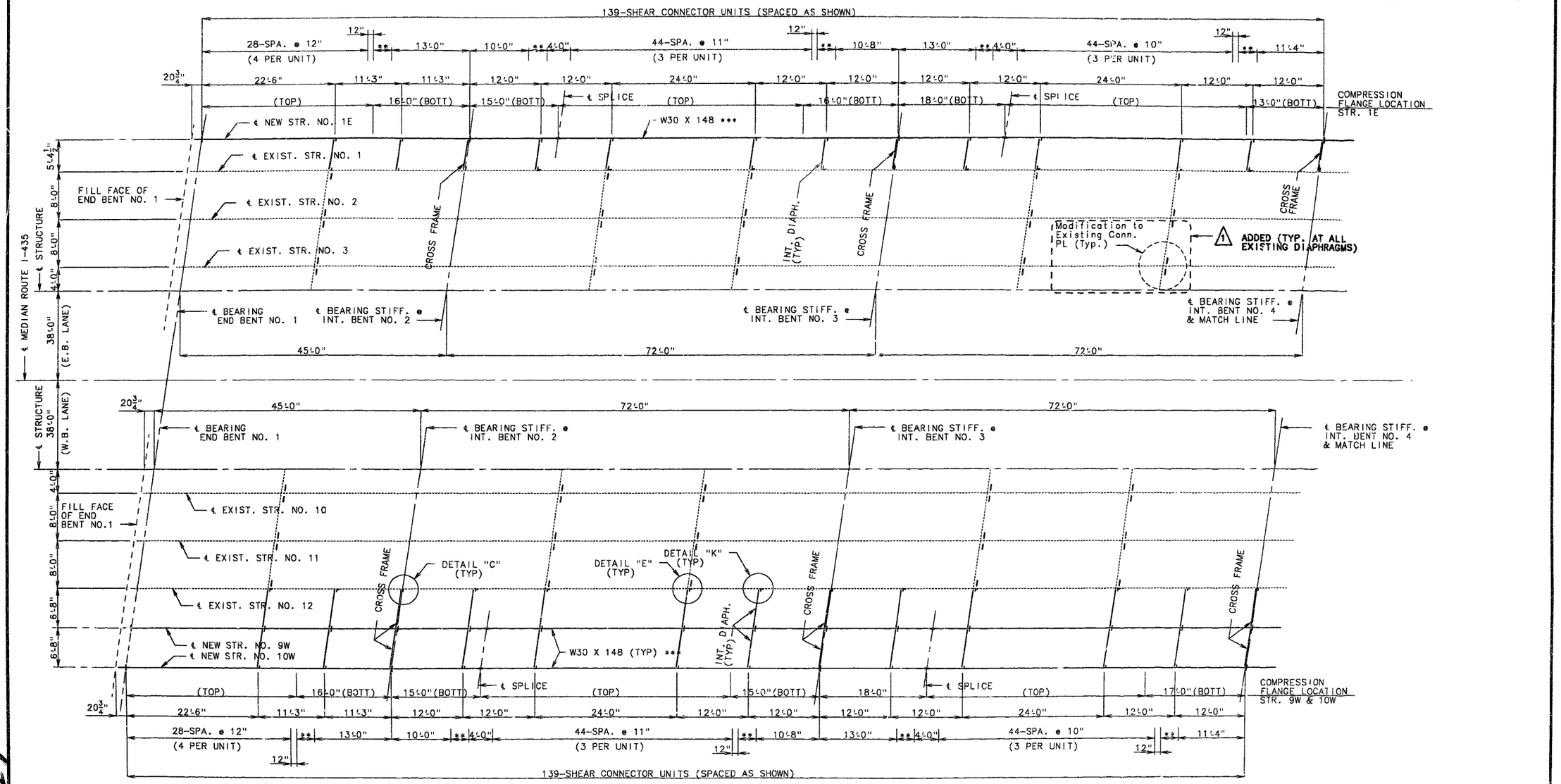

(1) DRILL 13/16" HOLE THRU EXISTING ANGLES TO MATCH HOLES IN NEW STEEL. TIGHTEN BOLTS TO SNUG FIT BEFORE SLAB IS POURED, TORQUE AFTER SLAB IS POURED. EXISTING HOLES MAY BE USED WHERE POSSIBLE.

COST OF DRILLING HOLES IN EXISTING STRUCTURAL STEEL SHALL BE INCLUDED IN UNIT PRICE BID FOR STRUCTURAL CARBON STEEL.

NOTE: INTERMEDIATE DIAPHRAGMS AND CROSS FRAMES SHALL BE PLACED AS SHOWN IN PLAN OF STRUCTURAL STEEL.

FOR DETAILS OF MODIFICATIONS TO EXISTING CONN. PLATES SEE DETAILS "L" & "J" ON SHEET NO. 32.

(1) ADDED

PLAN OF STRUCTURAL STEEL (STAGE 2 CONSTRUCTION)

NOTE: DIMENSIONS SHOWN ARE HORIZONTAL DIMENSIONS AT BOTTOM OF BOTTOM FLANGE.

** 3-SPA. @ 12" (4 PER UNIT)

*** NOTCH TOUGHNESS IS REQUIRED FOR ALL WIDE FLANGE BEAMS.

NOTE: FOR PLACEMENT OF SHEAR CONNECTORS ON ALL STRINGERS SEE SHEET NO.32.

FOR LOCATION OF SLAB DRAINS SEE SHEET NO.45.

FOR DETAILS OF DIAPHRAGMS AND CROSS FRAMES SEE SHEET NO.31.

FOR DETAIL "E" SEE SHEET NO.32.

ALL FABRICATED STRUCTURAL STEEL SHALL BE A36, EXCEPT WIDE FLANGE BEAMS SHALL BE A572.

(1) REVISED: MAY 12, 1994

DETAILED MAR. 1993
CHECKED APR. 1993

NOTE: THIS DRAWING IS NOT TO SCALE. FOLLOW DIMENSIONS.

SHEET NO. 29 OF 63.

JACKSON COUNTY

A-1427R1

221

STATE	PROJ. NO.	SHEET NO.
MO.		44

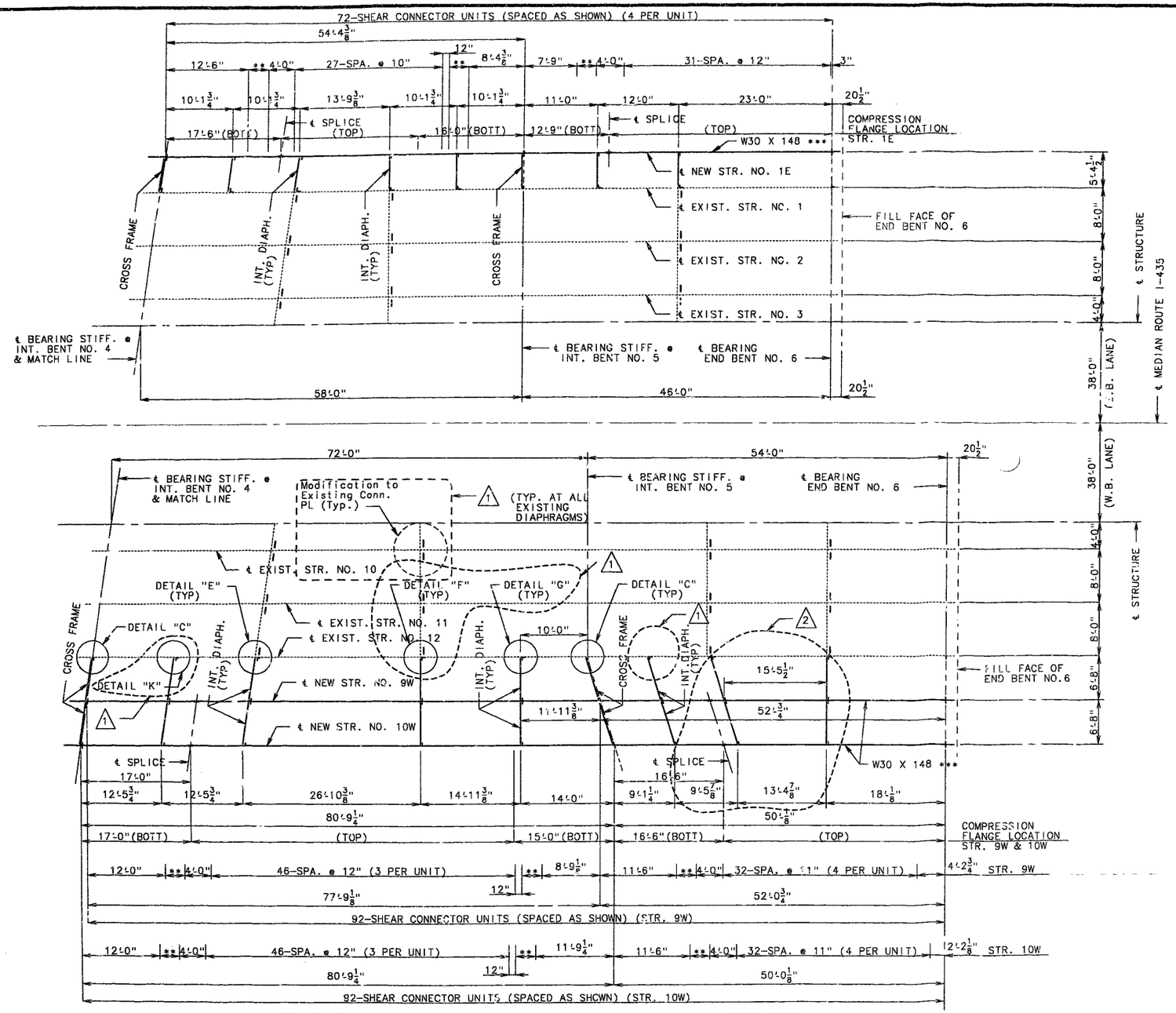

NOTE: INTERMEDIATE DIAPHRAGMS AND CROSS FRAMES SHALL BE PLACED AS SHOWN IN PLAN OF STRUCTURAL STEEL.

FOR DETAILS OF MODIFICATIONS TO EXISTING CONN. PLATES SEE DETAILS "L" & "J" ON SHEET NO. 32.

NOTE: FOR PLACEMENT OF SHEAR CONNECTORS ON ALL STRINGERS SEE SHEET NO.32.

FOR LOCATION OF SLAB DRAINS SEE SHEET NO.45.

FOR DETAILS OF DIAPHRAGMS AND CROSS FRAMES SEE SHEET NO.31.

FOR DETAILS "C", "E", "F" & "G" SEE SHEET NO.32.

ALL FABRICATED STRUCTURAL STEEL SHALL BE A36, EXCEPT WIDE FLANGE BEAMS SHALL BE A572.

(1) DRILL 13/16" HOLE THRU EXISTING ANGLES TO MATCH HOLES IN NEW STEEL. TIGHTEN BOLTS TO SNUG FIT BEFORE SLAB IS POURED, TORQUE AFTER SLAB IS POURED. EXISTING HOLES MAY BE USED WHERE POSSIBLE.

COST OF DRILLING HOLES IN EXISTING STRUCTURAL STEEL SHALL BE INCLUDED IN UNIT PRICE BID FOR STRUCTURAL CARBON STEEL.

DETAILED MAR. 1993
CHECKED APR. 1993

PLAN OF STRUCTURAL STEEL (STAGE 2 CONSTRUCTION)

** 3-SPA. @ 12" (4 PER UNIT)

*** NOTCH TOUGHNESS IS REQUIRED FOR ALL WIDE FLANGE BEAMS.

NOTE: DIMENSIONS SHOWN ARE HORIZONTAL DIMENSIONS AT BOTTOM OF BOTTOM FLANGE.

NOTE: THIS DRAWING IS NOT TO SCALE. FOLLOW DIMENSIONS.

(1) REVISED: MAY 12, 1994 (2) REVISED: JUNE 13, 1994

SHEET NO. 30 OF 63.

JACKSON COUNTY

A-1427R1

STATE	PROJ. NO.	SHEET NO.
MO.		245

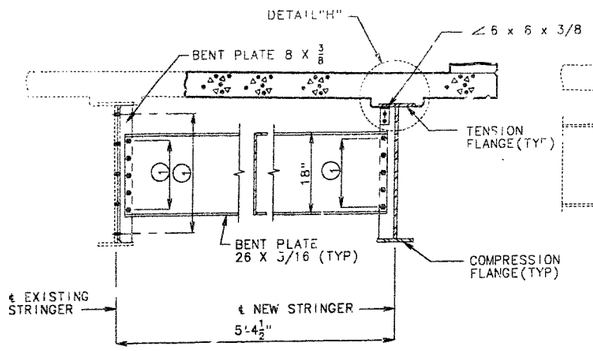

PART SECTION SHOWING INTERMEDIATE DIAPHRAGM (TOP FLANGE IN TENSION)

STAGE 2 (EB LANE)

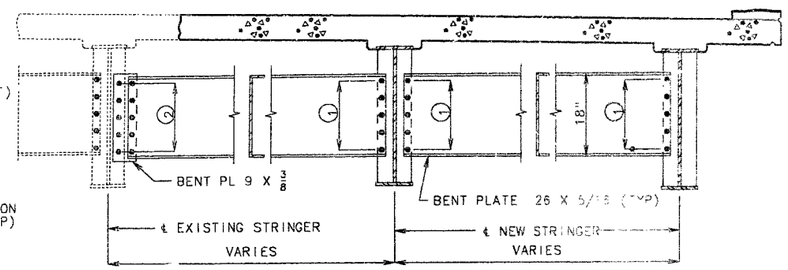

TYPICAL PART SECTION SHOWING CROSS FRAMES

STAGE 1 (EB LANE & WB LANE)
STAGE 2 (WB LANE)

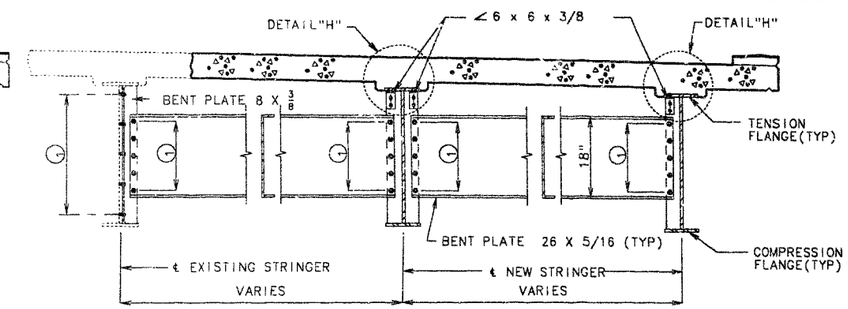

PART SECTION SHOWING INTERMEDIATE DIAPHRAGM (TOP FLANGE IN TENSION)

STAGE 1 (EB LANE & WB LANE)
STAGE 2 (WB LANE)

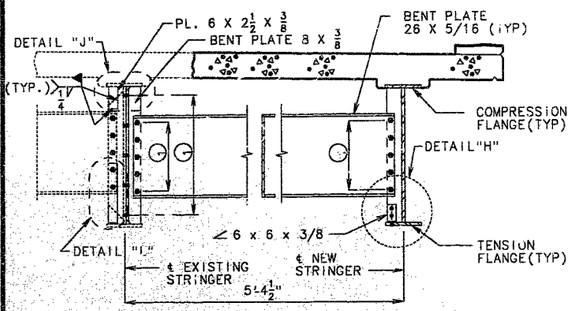

PART SECTION SHOWING INTERMEDIATE DIAPHRAGM AND CONNECTION TO EXISTING DIAPHRAGM (BOTTOM FLANGE IN TENSION)

STAGE 2 (EB LANE)

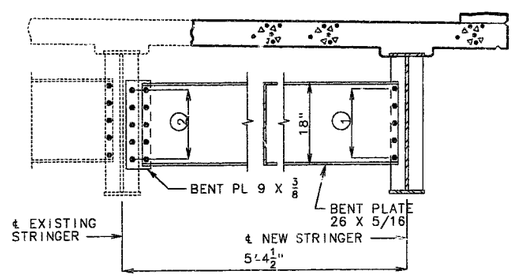

TYPICAL PART SECTION SHOWING CROSS FRAMES

STAGE 2 (EB LANE)

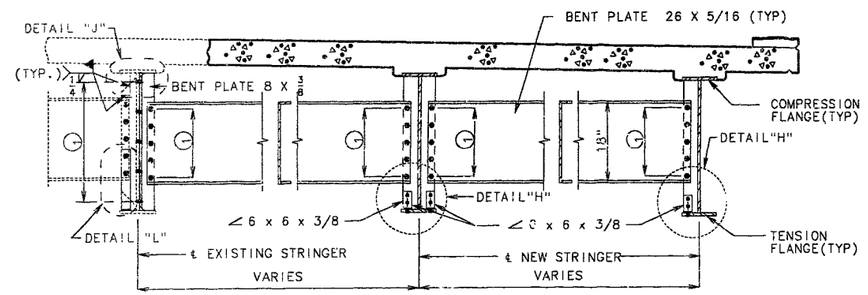

PART SECTION SHOWING INTERMEDIATE DIAPHRAGM AND CONNECTION TO EXISTING DIAPHRAGM (BOTTOM FLANGE IN TENSION)

STAGE 1 (EB LANE & WB LANE)
STAGE 2 (WB LANE)

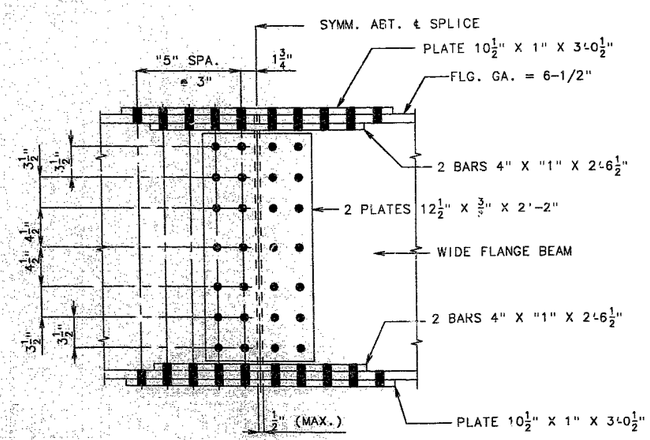

BOLTED FIELD SPLICE

NOTE: 15/16" Ø HOLES FOR 7/8"Ø HIGH STRENGTH BOLTS.

① 5 – 13/16" Ø HOLES FOR 3/4" H.S. BOLTS (EQUALLY SPACED)

② DRILL 5 – 13/16" Ø HOLES FOR 3/4" H.S. BOLTS (EQUALLY SPACED) IN EXISTING BEARING STIFFENER PLATE TO MATCH HOLES IN NEW STEEL. TIGHTEN BOLTS TO SNUG FIT BEFORE SLAB IS POURED, TORQUE AFTER SLAB IS POURED.

NOTE: THE TWO 3/4"Ø H.S. BOLTS THAT CONNECT THE 6 X 6 X 3/8 ANGLE TO THE TOP FLANGE SHALL BE PLACED SO THE NUT IS ON THE INSIDE OF FLANGE TOWARD THE WEB.

TIGHTEN BOLTS TO SNUG TIGHT BEFORE SLAB IS POURED AND TIGHTEN AFTER THE NEW WIDENED SLAB IS IN PLACE.

FOR DETAIL "H", 8 x 3/8 BENT PLATE FOR INT. DIAPH. CONNECTIONS AND WELDING DETAILS, SEE SHEET NO.32.

FOR DETAILS "J" AND "L" SEE SHEET NO. 32.

DETAILED MAR. 1993
CHECKED MAR. 1993

NOTE: THIS DRAWING IS NOT TO SCALE. FOLLOW DIMENSIONS.

JACKSON COUNTY A-1427R1

STATE	PROJ. NO.	SHEET NO.
MO.		246

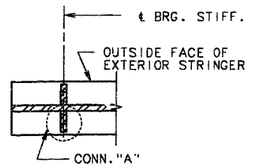

END BRG. STIFF.

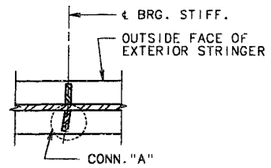

INT. BRG. STIFF.
BTS. NO. 2, 3 & 4
(STAGE 1 & 2 CONST.)

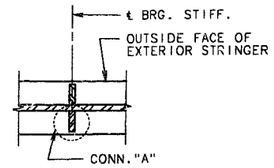

INT. BRG. STIFF. BT. NO. 5
(STAGE 1 CONST. EBL & WBL)
(STAGE 2 CONST. EBL ONLY)

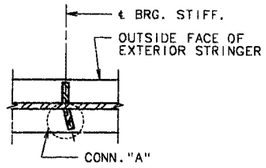

INT. BRG. STIFF. BT. NO. 5
(STAGE 2 CONST., WBL ONLY)

TYPICAL LOCATION DETAILS

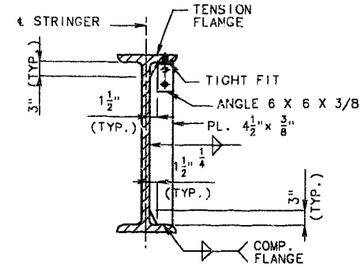

CONNECTION PLATE
FOR
INTERMEDIATE DIAPHRAGMS
(USE CONN. A)

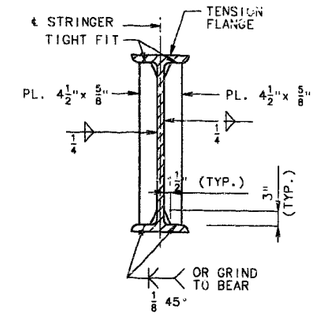

BEARING STIFFENER

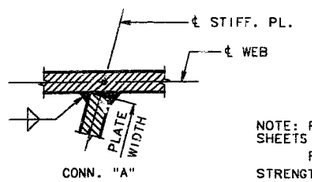

WELDING DETAILS

NOTE: FOR LOCATION OF DETAILS "C" & "D", SEE SHEETS NO. 27, 28, 29, & 30.

FIELD DRILL $\frac{13}{16}$"Ø HOLES FOR $\frac{3}{4}$"Ø HIGH STRENGTH BOLTS IN EXISTING STIFFENERS.

COST OF FIELD DRILLING EXISTING STRUCTURAL STEEL FOR DIAPHRAGM CONNECTIONS SHALL BE INCLUDED IN THE CONTRACT UNIT PRICE BID FOR FABRICATED STRUCTURAL CARBON STEEL.

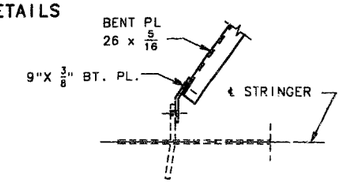

DETAIL "C"

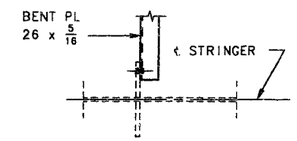

DETAIL "D"

WELDING DETAILS

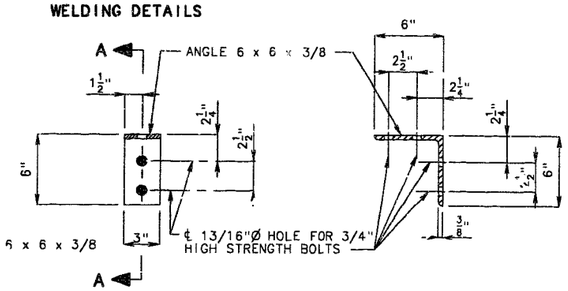

DETAIL OF FLANGE CONNECTION ANGLES

SECTION A-A

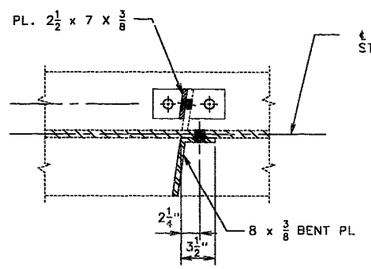

DETAIL "E"

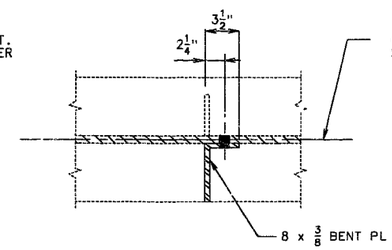

DETAIL "F"

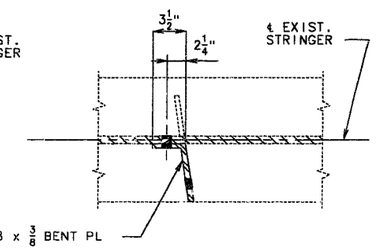

DETAIL "G"

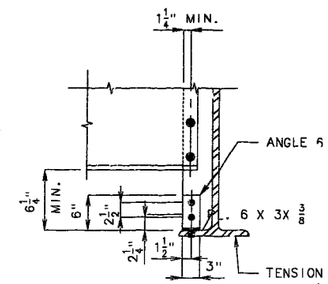

DETAIL "H"

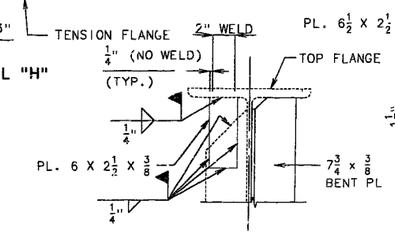

DETAIL "J"

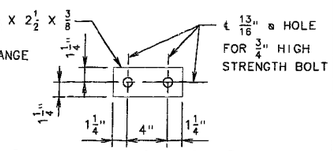

PLAN OF 6½ X 2½ X 3/8
CONNECTION PLATE

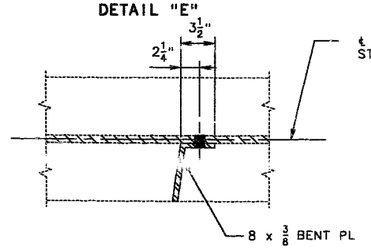

DETAIL "K"

NOTE: THE TWO 3/4"Ø H.S. BOLTS THAT CONNECT THE 6 X 6 X 3/8 ANGLE TO THE TOP FLANGE SHALL BE PLACED SO THE NUT IS ON THE INSIDE OF FLANGE TOWARD THE WEB.

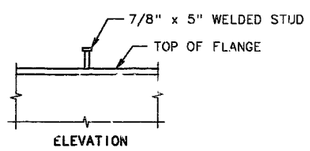

ELEVATION

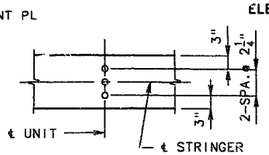

PLAN (3-STUDS PER UNIT)

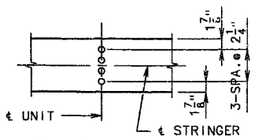

PLAN (4-STUDS PER UNIT)

DETAILS OF SHEAR CONNECTORS

NOTE: WEIGHT OF 5,438 LBS. OF SHEAR CONNECTORS IS INCLUDED IN THE WEIGHT FABRICATED STRUCTURAL CARBON STEEL.

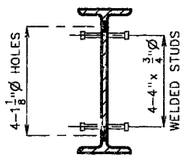

SECTION H-H

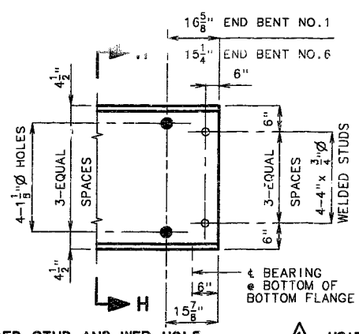

WELDED STUD AND WEB HOLE
DETAILS AT END BENTS

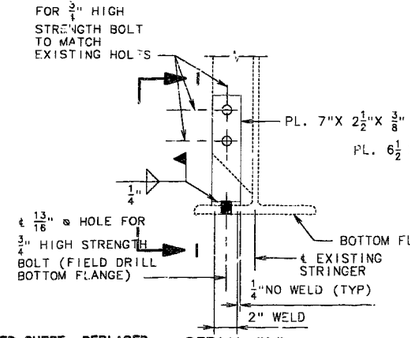

DETAIL "L"

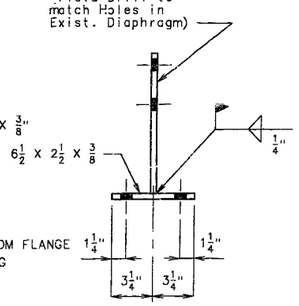

PART SECTION I-I

NOTE: FOR LOCATION OF DETAIL "C", "E" & "K" SEE SHEETS NO. 27, 28, 29, & 30.

FOR LOCATION OF DETAILS "F" & "G" SEE SHEET NO. 30.

FOR LOCATION OF DETAILS "H", "J" & "L" SEE SHEET NO. 31.

DETAILED MAR. 1993
CHECKED APR. 1993

NOTE: THIS DRAWING IS NOT TO SCALE. FOLLOW DIMENSIONS.

⚠1 VOIDED SHEET. REPLACED BY SHEET NO. 32a of 63.

SHEET NO. 32 OF 63.

JACKSON COUNTY

A-1427R1

234

STATE	PROJ. NO.	SHEET NO.
MO.		246a

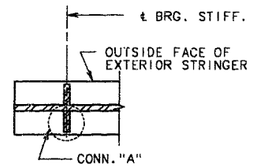

END BRG. STIFF.

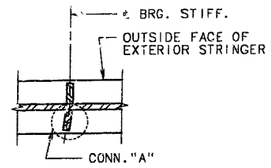

INT. BRG. STIFF.
BTS. NO. 2, 3 & 4
(STAGE 1 & 2 CONST.)

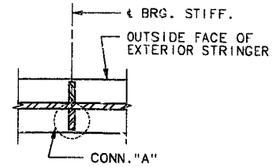

INT. BRG. STIFF. BT. NO. 5
(STAGE 1 CONST. EBL & WBL)
(STAGE 2 CONST. EBL ONLY)

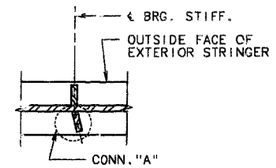

INT. BRG. STIFF. BT. NO. 5
(STAGE 2 CONST., WBL ONLY)

TYPICAL LOCATION DETAILS

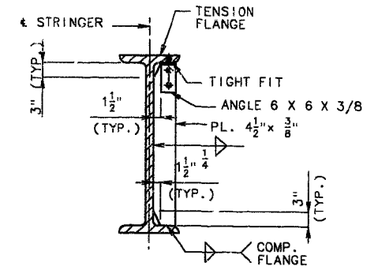

CONNECTION PLATE
FOR
INTERMEDIATE DIAPHRAGMS
(USE CONN. A)

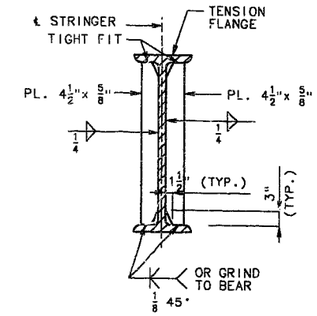

BEARING STIFFENER

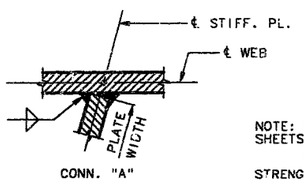

WELDING DETAILS

NOTE: FOR LOCATION OF DETAILS "C" & "D", SEE SHEETS NO. 27, 28, 29, & 30.
FIELD DRILL 13/16"Ø HOLES FOR ¾"Ø HIGH STRENGTH BOLTS IN EXISTING STIFFENERS .

COST OF FIELD DRILLING EXISTING STRUCTURAL STEEL FOR DIAPHRAGM CONNECTIONS SHALL BE INCLUDED IN THE CONTRACT UNIT PRICE BID FOR FABRICATED STRUCTURAL CARBON STEEL.

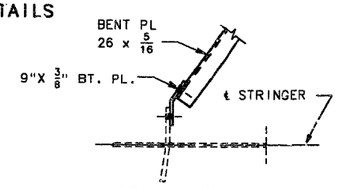

DETAIL "C"

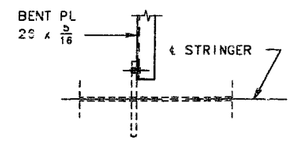

DETAIL "D"

WELDING DETAILS

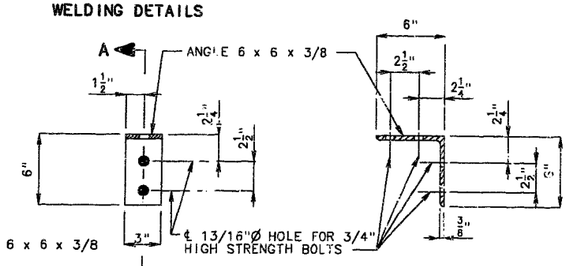

DETAIL OF FLANGE CONNECTION ANGLES

SECTION A-A

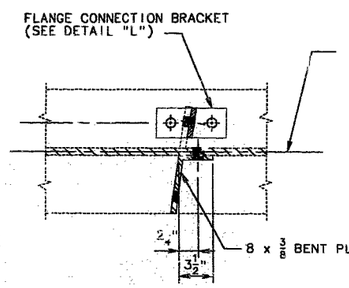

DETAIL "E"

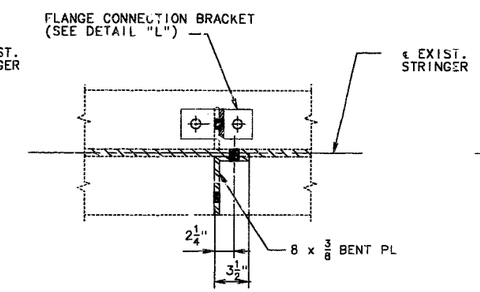

DETAIL "F"

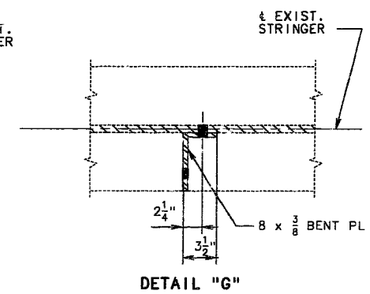

DETAIL "G"

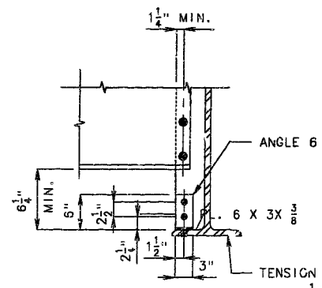

DETAIL "H"

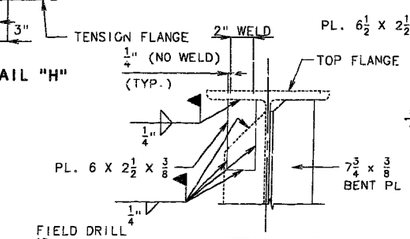

DETAIL "J"

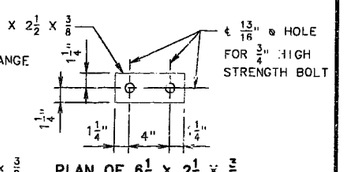

PLAN OF 6½ X 2½ X ⅜
CONNECTION PLATE

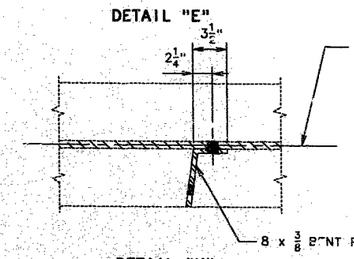

DETAIL "K"

NOTE: THE TWO 3/4"Ø H.S. BOLTS THAT CONNECT THE 6 X 6 X 3/8 ANGLE TO THE TOP FLANGE SHALL BE PLACED SO THE NUT IS ON THE INSIDE OF FLANGE TOWARD THE WEB.

① WHERE NECESSARY, FIELD DRILL TO MATCH EXISTING HOLES IN FLANGE SPLICE.

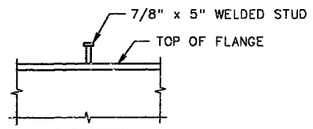

ELEVATION

NOTE: FOR LOCATION OF DETAIL "C", "E" & "K" SEE SHEETS NO. 27, 28, 29, & 30.

FOR LOCATION OF DETAILS "F" & "G" SEE SHEET NO. 30.

FOR LOCATION OF DETAILS "H", "J" & "L" SEE SHEET NO. 31.

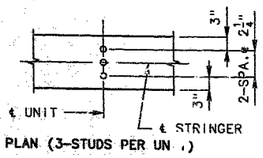

PLAN (3-STUDS PER UNIT)

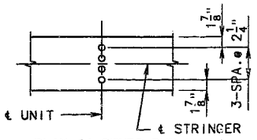

PLAN (4-STUDS PER UNIT)

DETAILS OF SHEAR CONNECTORS

NOTE: WEIGHT OF 5,438 LBS. OF SHEAR CONNECTORS IS INCLUDED IN THE WEIGHT FABRICATED STRUCTURAL CARBON STEEL.

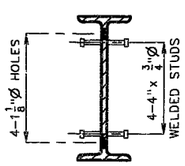

SECTION H-H

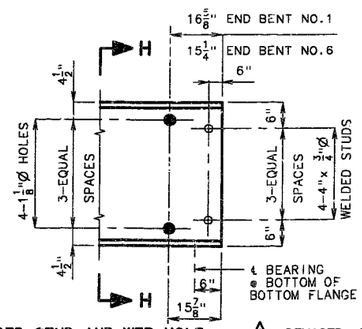

WELDED STUD AND WEB HOLE DETAILS AT END BENTS

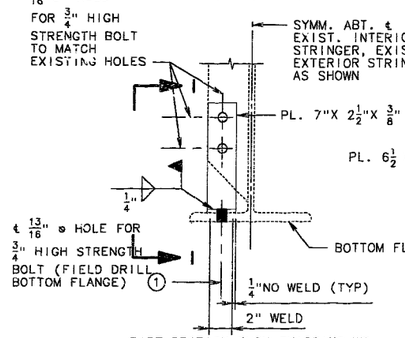

PART SECTION THRU EXISTING WF SHOWING CONN. AT BOTT. FLANGE
DETAIL "L"

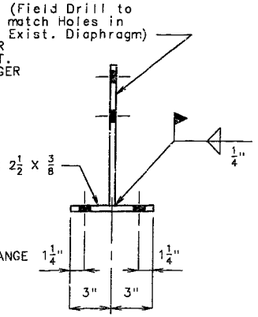

PART SECTION I-I

FIELD DRILL 13/16"ø HOLE FOR ¾" HIGH STRENGTH BOLT TO MATCH EXISTING HOLES

DETAILED MAR. 1993
CHECKED APR. 1993

NOTE: THIS DRAWING IS NOT TO SCALE. FOLLOW DIMENSIONS.

⚠ REVISED: MAY 12, 1994
REPLACES SHEET NO. 32 of 63.

SHEET NO. 32a OF 63.

JACKSON COUNTY

A-1427R1

32a

STATE	PROJ. NO.	SHEET NO.
MO.		247

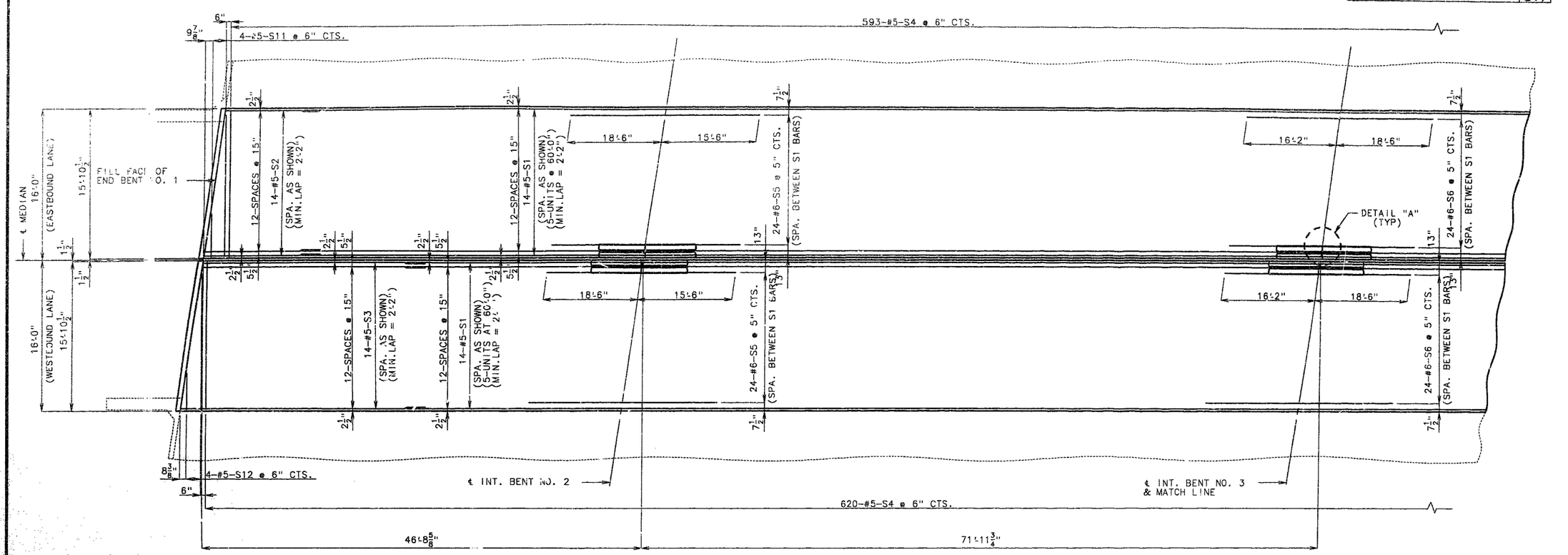

SPAN (1-2) SPAN (2-3)

PLAN SHOWING TOP SLAB REINFORCEMENT
STAGE 1 CONSTRUCTION

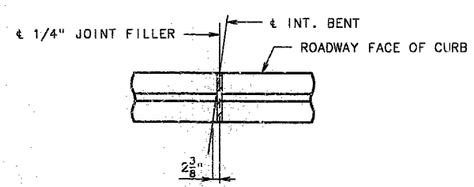

DETAIL "A"

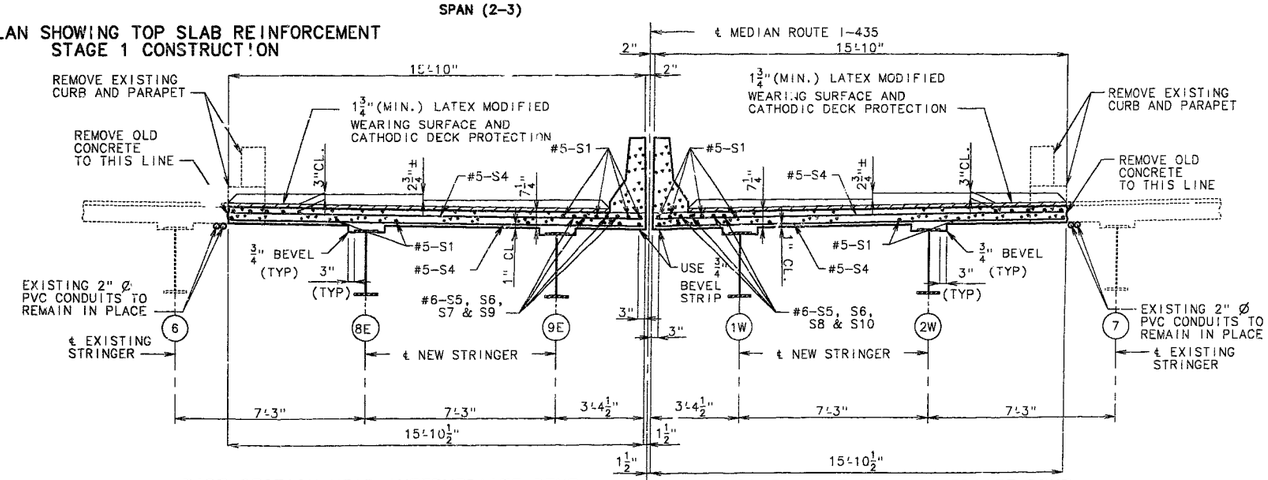

PART SECTION NEAR INTERMEDIATE BENT (EASTBOUND LANE)

PART SECTION NEAR INTERMEDIATE BENT (WESTBOUND LANE)

NOTE: LONGITUDINAL DIMENSIONS SHOWN ARE HORIZONTAL.

FOR DETAILS AND REINFORCEMENT OF SAFETY BARRIER CURB NOT SHOWN, SEE SHEET NO. 46.

THE CONTRACTOR SHALL POUR AND SATISFACTORILY FINISH THE SLAB POURS (END TO END) AT A RATE OF NOT LESS THAN 25 CUBIC YARDS PER HOUR. CONCRETE SHALL BE POURED UPGRADE.

NOTE: MATCH EXISTING CROSS SLOPE ON ROADWAY SLAB.

DETAILED APR. 1993
CHECKED APR. 1993

NOTE: THIS DRAWING IS NOT TO SCALE. FOLLOW DIMENSIONS.

JACKSON COUNTY A-1427R1

STATE	PROJ. NO.	SHEET NO.
MO.		248

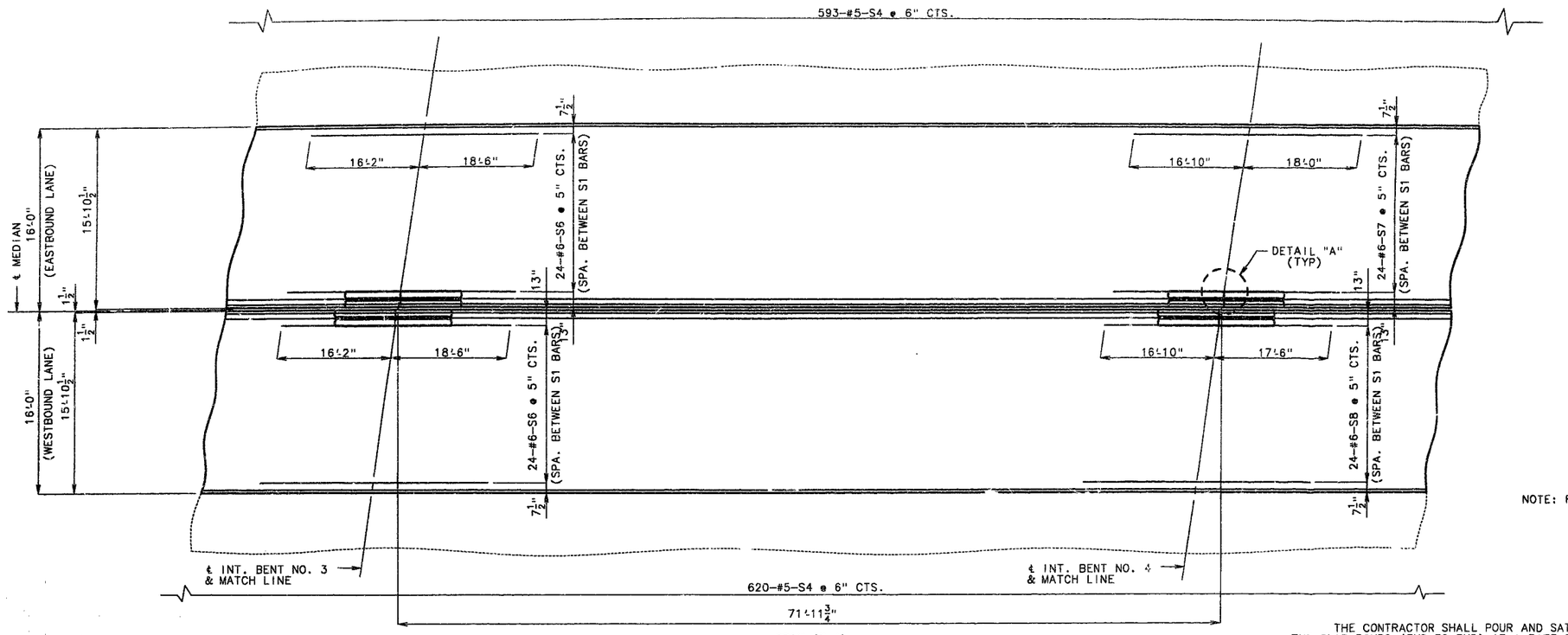

NOTE: FOR DETAIL "A" SEE SHEET NO. 33.

SPAN (3-4)

PLAN SHOWING TOP SLAB REINFORCEMENT STAGE 1 CONSTRUCTION

THE CONTRACTOR SHALL POUR AND SATISFACTORILY FINISH THE SLAB POURS (END TO END) AT A RATE OF NOT LESS THAN 25 CUBIC YARDS PER HOUR. CONCRETE SHALL BE POURED UPGRADE.

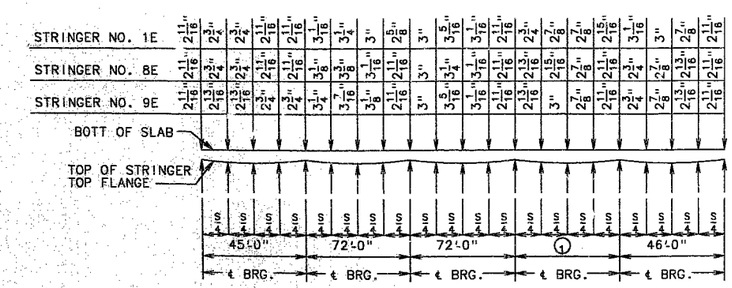

SPAN (1-2) SPAN (2-3) SPAN (3-4) SPAN (4-5) SPAN (5-6)

THEORETICAL SLAB HAUNCHING DIAGRAM

(EASTBOUND LANE) (STAGE 1 & STAGE 2 CONSTRUCTION)

① 54'-4⅜" STRINGER 1E
61'-10⅞" STRINGER 8E
62'-11⅜" STRINGER 9E

NOTE: HAUNCHES ARE BASED ON ELEVATIONS SHOWN ON THE ORIGINAL PLANS. HAUNCHES TO BE ADJUSTED FOR ANY DIFFERENCE IN ELEVATIONS FROM THOSE SHOWN ON THE ORIGINAL PLANS. NO PAYMENT WILL BE MADE FOR ADDITIONAL LABOR OR MATERIALS REQUIRED FOR VARIATION.

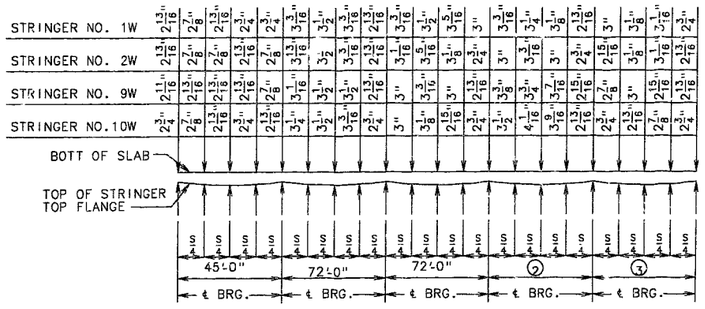

SPAN (1-2) SPAN (2-3) SPAN (3-4) SPAN (4-5) SPAN (5-6)

THEORETICAL SLAB HAUNCHING DIAGRAM

(WESTBOUND LANE) (STAGE 1 & STAGE 2 CONSTRUCTION)

NOTE: HAUNCHES ARE BASED ON ELEVATIONS SHOWN ON THE ORIGINAL PLANS. HAUNCHES TO BE ADJUSTED FOR ANY DIFFERENCE IN ELEVATIONS FROM THOSE SHOWN ON THE ORIGINAL PLANS. NO PAYMENT WILL BE MADE FOR ADDITIONAL LABOR OR MATERIALS REQUIRED FOR VARIATION.

②	③
67'-0½" STRINGER 1W	54'-0" STRINGER 1W
68'-1⅛" STRINGER 2W	54'-0" STRINGER 2W
77'-9⅛" STRINGER 9W	52'-0¾" STRINGER 9W
80'-9¼" STRINGER 10W	50'-0⅛" STRINGER 10W

DETAILED APR. 1993
CHECKED APR. 1993

NOTE: THIS DRAWING IS NOT TO SCALE. FOLLOW DIMENSIONS.

JACKSON COUNTY A-1427R1

STATE	PROJ. NO.	SHEET NO.
MO.		249

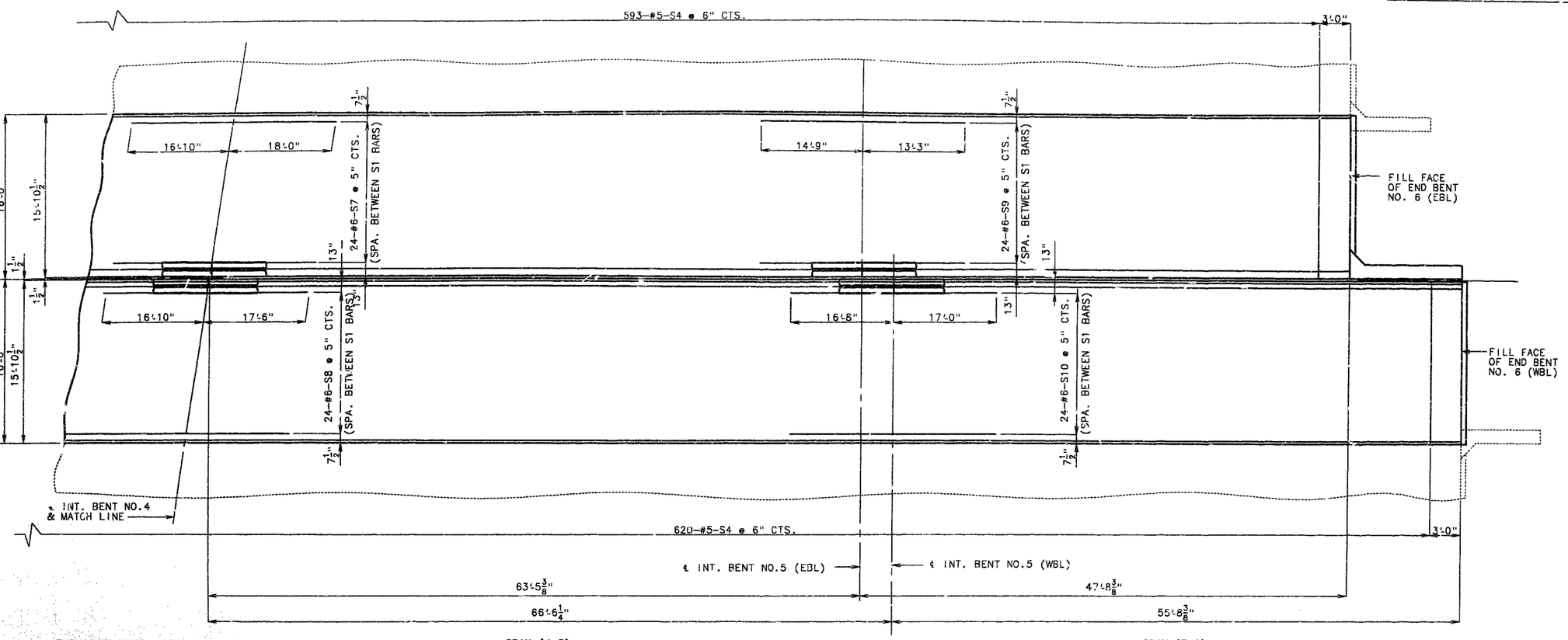

THE CONTRACTOR SHALL POUR AND SATISFACTORILY FINISH THE SLAB POURS (END TO END) AT A RATE OF NOT LESS THAN 25 CUBIC YARDS PER HOUR. CONCRETE SHALL BE POURED UPGRADE.

PLAN SHOWING TOP SLAB REINFORCEMENT STAGE 1 CONSTRUCTION

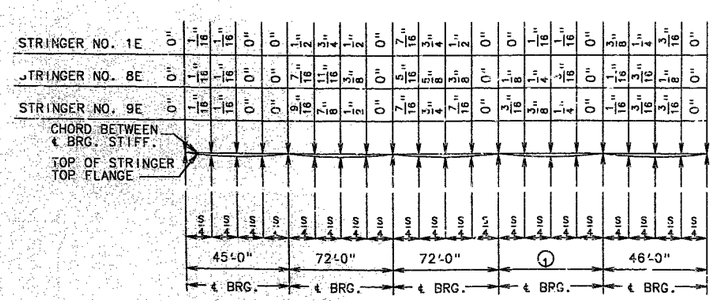

DEAD LOAD DEFLECTION DIAGRAM

(EASTBOUND LANE) (STAGE 1 & STAGE 2 CONSTRUCTION)

NOTE: 15 % OF DEAD LOAD DEFLECTION DUE TO WEIGHT OF STRUCTURAL STEEL.

① 54'-4⅜" STRINGER 1E
61'-10⅞" STRINGER 8E
62'-11⅜" STRINGER 9E

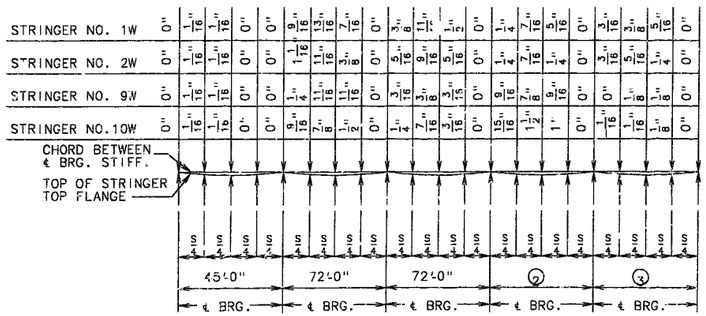

DEAD LOAD DEFLECTION DIAGRAM

(WESTBOUND LANE) (STAGE 1 & STAGE 2 CONSTRUCTION)

NOTE: 16 % OF DEAD LOAD DEFLECTION DUE TO WEIGHT OF STRUCTURAL STEEL.

② 67'-0½" STRINGER 1W
68'-1⅛" STRINGER 2W
77'-9⅛" STRINGER 9W
80'-9¼" STRINGER 10W

③ 54'-0" STRINGER 1W
54'-0" STRINGER 2W
52'-0¾" STRINGER 9W
50'-0⅛" STRINGER 10W

DETAILED APR. 1993
CHECKED APR. 1993

NOTE: THIS DRAWING IS NOT TO SCALE. FOLLOW DIMENSIONS.

SHEET NO. 35 OF 63.

JACKSON COUNTY

A-1427R1

274208

STATE	PROJ. NO.	SHEET NO.
MO.		250

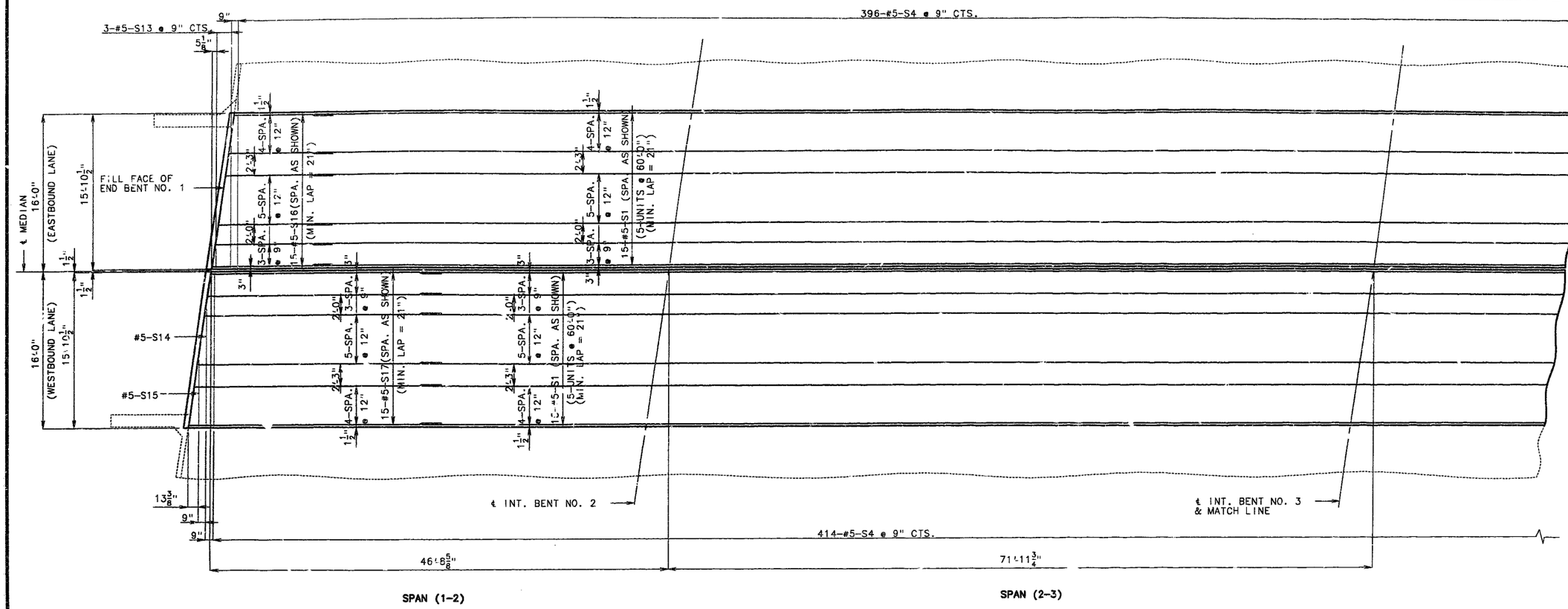

PLAN SHOWING BOTTOM SLAB REINFORCEMENT
STAGE 1 CONSTRUCTION

NOTE: LONGITUDINAL DIMENSIONS SHOWN ARE HORIZONTAL.

FOR DETAILS AND REINFORCEMENT OF SAFETY BARRIER CURB NOT SHOWN, SEE SHEET NO.46.

FOR CROSS SECTION THRU SLAB SEE SHEET NO.33.

THE CONTRACTOR SHALL POUR AND SATISFACTORILY FINISH THE SLAB POURS (END TO END) AT A RATE OF NOT LESS THAN 25 CUBIC YARDS PER HOUR. CONCRETE SHALL BE POURED UPGRADE.

DETAILED APR. 1993
CHECKED APR. 1993

NOTE: THIS DRAWING IS NOT TO SCALE. FOLLOW DIMENSIONS.

JACKSON COUNTY A-1427R1

225-229

STATE	PROJ. NO.	SHEET NO.
MO.		251

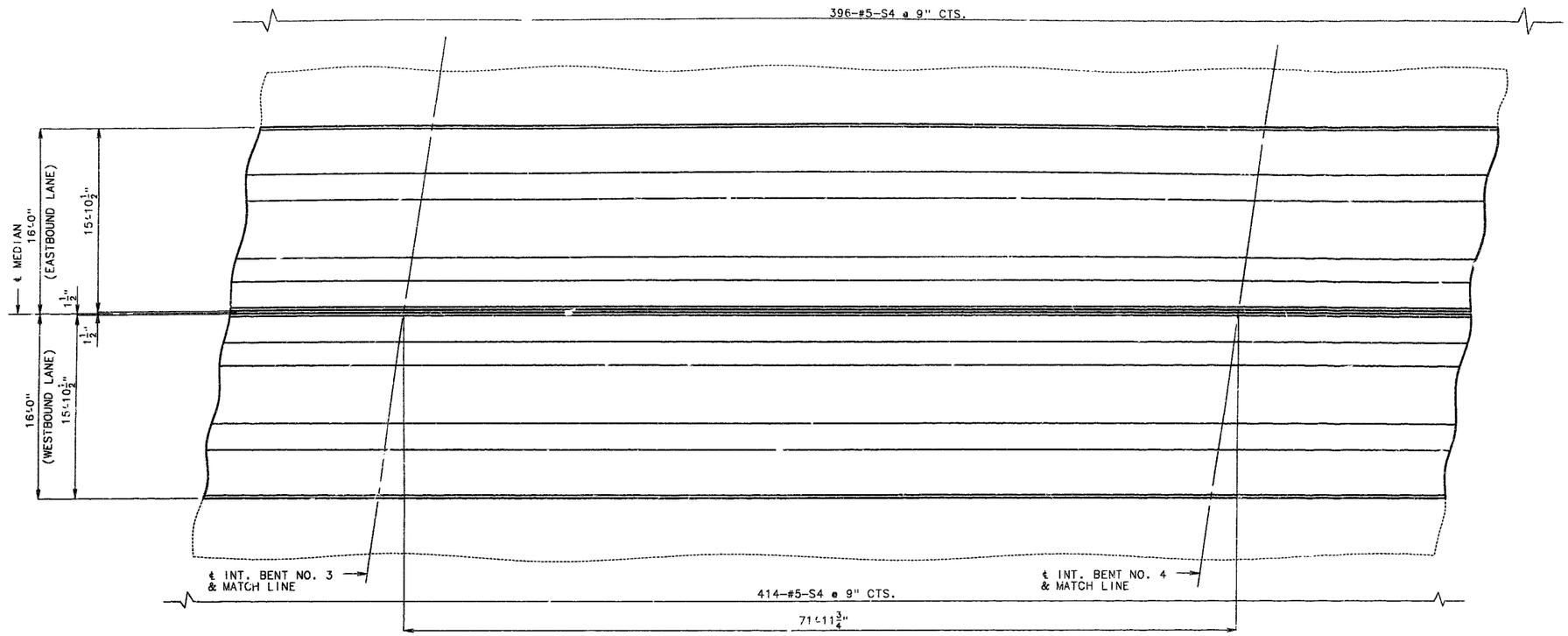

SPAN (3-4)

PLAN SHOWING BOTTOM SLAB REINFORCEMENT
STAGE 1 CONSTRUCTION

NOTE: LONGITUDINAL DIMENSIONS SHOWN ARE HORIZONTAL.

FOR DETAILS AND REINFORCEMENT OF SAFETY BARRIER CURB NOT SHOWN, SEE SHEET NO.46.

FOR CROSS SECTION THRU SLAB SEE SHEET NO.33.

THE CONTRACTOR SHALL POUR AND SATISFACTORILY FINISH THE SLAB POURS (END TO END) AT A RATE OF NOT LESS THAN 25 CUBIC YARDS PER HOUR. CONCRETE SHALL BE POURED UPGRADE.

#26 230

STATE	PROJ. NO.	SHEET NO.
MO.		252

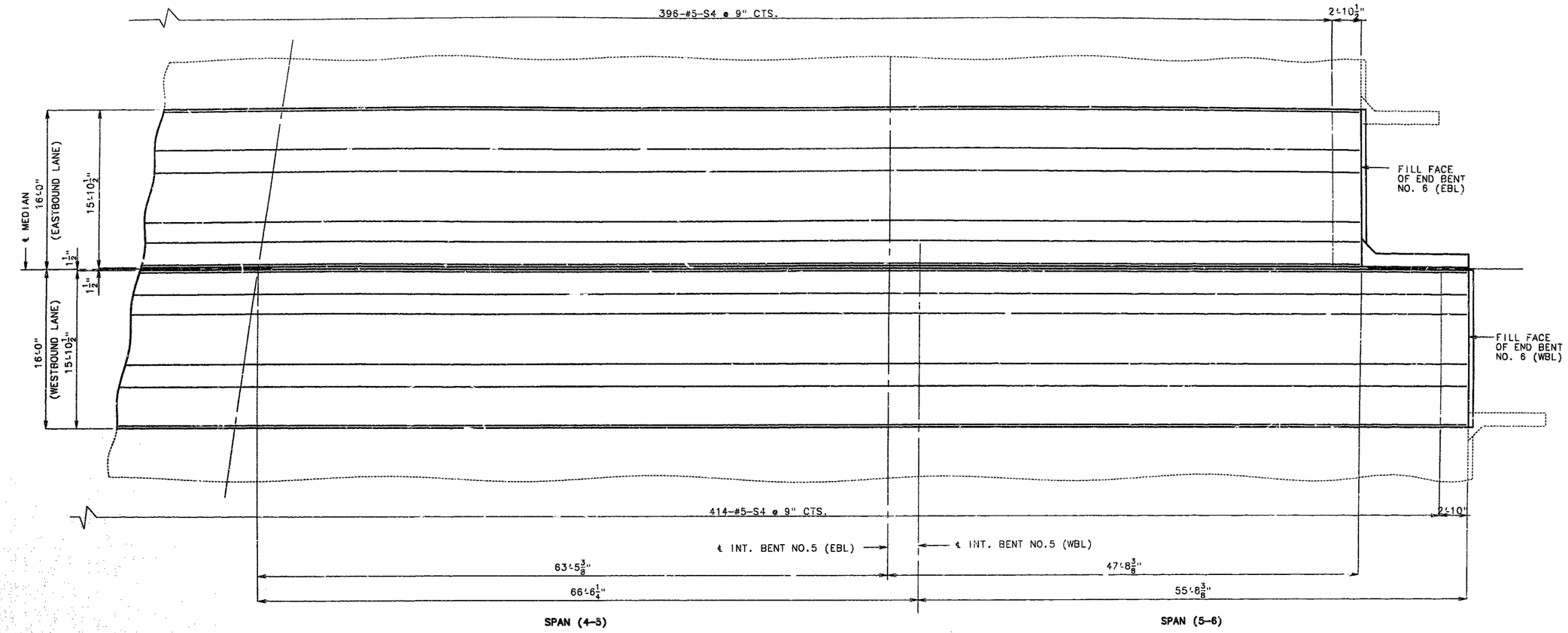

PLAN SHOWING BOTTOM SLAB REINFORCEMENT
STAGE 1 CONSTRUCTION

NOTE: LONGITUDINAL DIMENSIONS SHOWN ARE HORIZONTAL.

FOR DETAILS AND REINFORCEMENT OF SAFETY BARRIER CURB NOT SHOWN, SEE SHEET NO.46.

FOR CROSS SECTION THRU SLAB SEE SHEET NO.33.

THE CONTRACTOR SHALL POUR AND SATISFACTORILY FINISH THE SLAB POURS (END TO END) AT A RATE OF NOT LESS THAN 25 CUBIC YARDS PER HOUR. CONCRETE SHALL BE POURED UPGRADE.

DETAILED APR. 1993
CHECKED APR. 1993

NOTE: THIS DRAWING IS NOT TO SCALE. FOLLOW DIMENSIONS.

JACKSON COUNTY A-1427R1

222251

STATE	PROJ. NO.	SHEET NO.
MO.		253

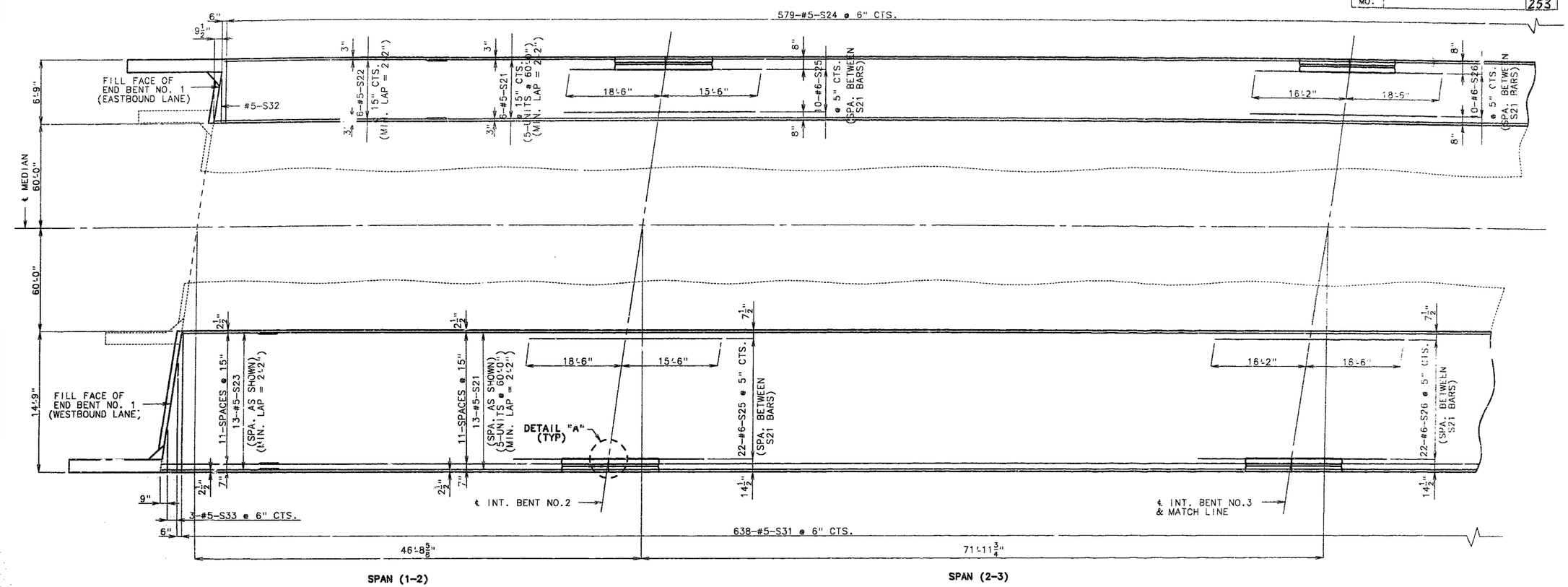

PLAN SHOWING TOP SLAB REINFORCEMENT
STAGE 2 CONSTRUCTION

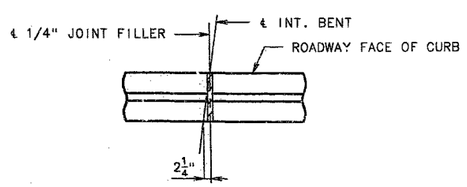

DETAIL "A"

NOTE: LONGITUDINAL DIMENSIONS SHOWN ARE HORIZONTAL.

FOR DETAILS AND REINFORCEMENT OF SAFETY BARRIER CURB NOT SHOWN, SEE SHEETS NO. 47 & 48.

THE CONTRACTOR SHALL POUR AND SATISFACTORILY FINISH THE SLAB POURS (END TO END) AT A RATE OF NOT LESS THAN 25 CUBIC YARDS PER HOUR. CONCRETE SHALL BE POURED UPGRADE.

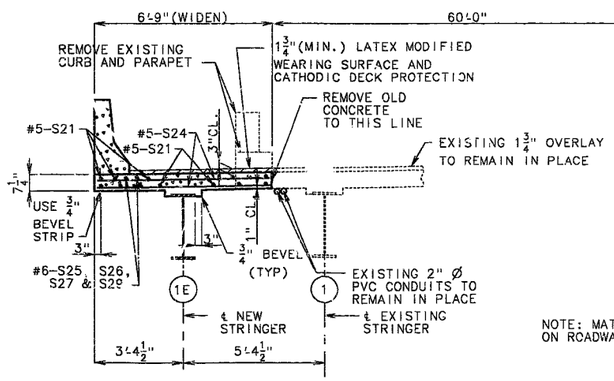

PART SECTION NEAR INTERMEDIATE BENT
(EASTBOUND LANE)

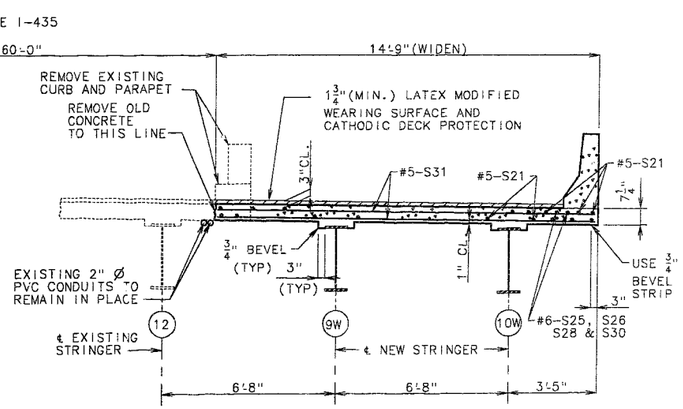

NOTE: MATCH EXISTING CROSS SLOPE ON ROADWAY SLAB.

PART SECTION NEAR INTERMEDIATE BENT
(WESTBOUND LANE)

DETAILED APR. 1993
CHECKED APR. 1993

NOTE: THIS DRAWING IS NOT TO SCALE. FOLLOW DIMENSIONS.

JACKSON COUNTY A-1427R1

272 232

STATE	PROJ. NO.	SHEET NO.
MO.		254

NOTE: FOR DETAIL "A" SEE SHEET NO. 39.

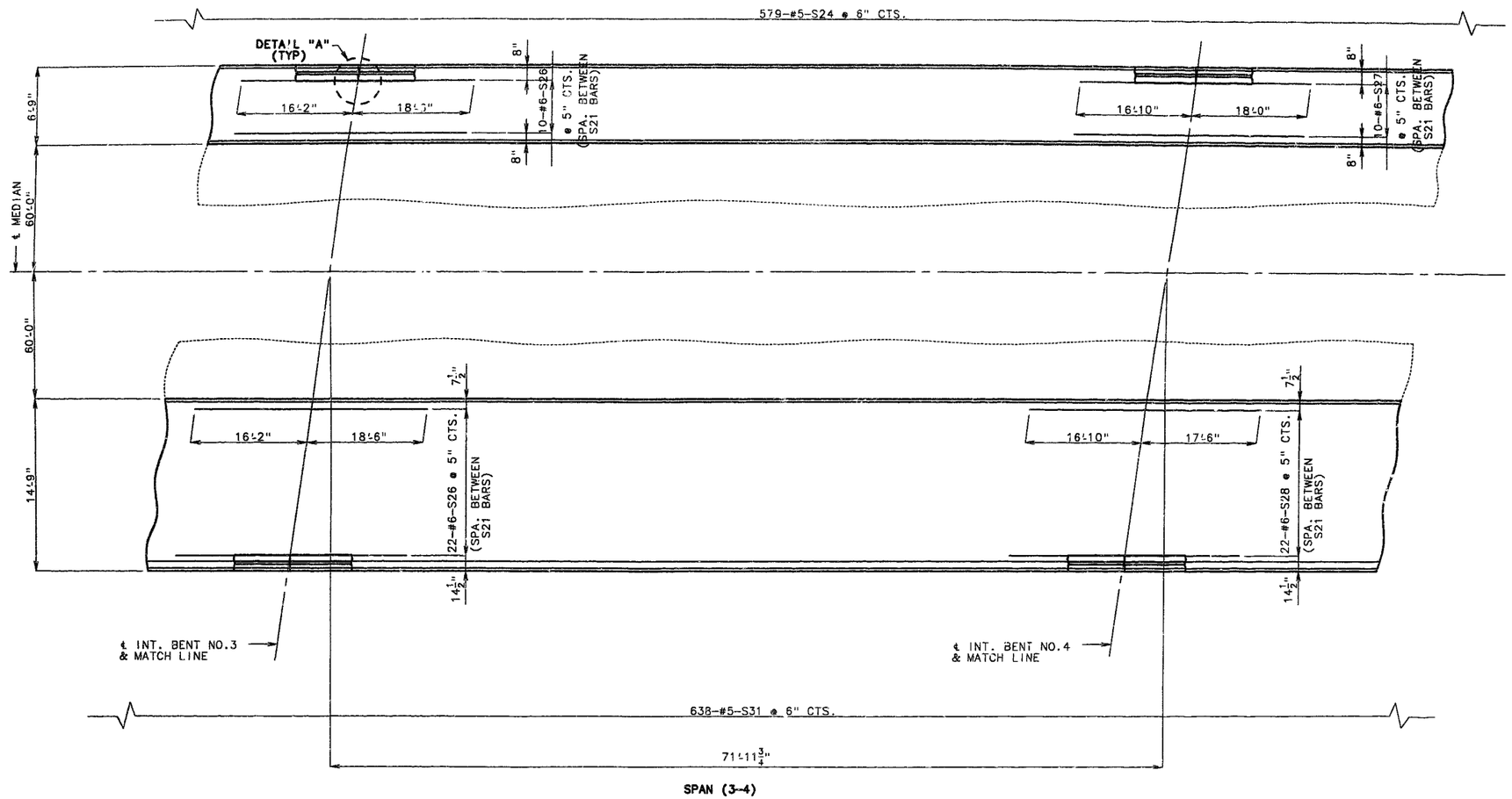

SPAN (3-4)

PLAN SHOWING TOP SLAB REINFORCEMENT
STAGE 2 CONSTRUCTION

THE CONTRACTOR SHALL POUR AND SATISFACTORILY FINISH THE SLAB POURS (END TO END) AT A RATE OF NOT LESS THAN 25 CUBIC YARDS PER HOUR. CONCRETE SHALL BE POURED UPGRADE.

DETAILED APR. 1993
CHECKED APR. 1993

NOTE: THIS DRAWING IS NOT TO SCALE. FOLLOW DIMENSIONS.

JACKSON COUNTY A-1427R1

#233

STATE	PROJ. NO.	SHEET NO.
MO.		235

NOTE: FOR DETAIL "A" SEE SHEET NO. 39.

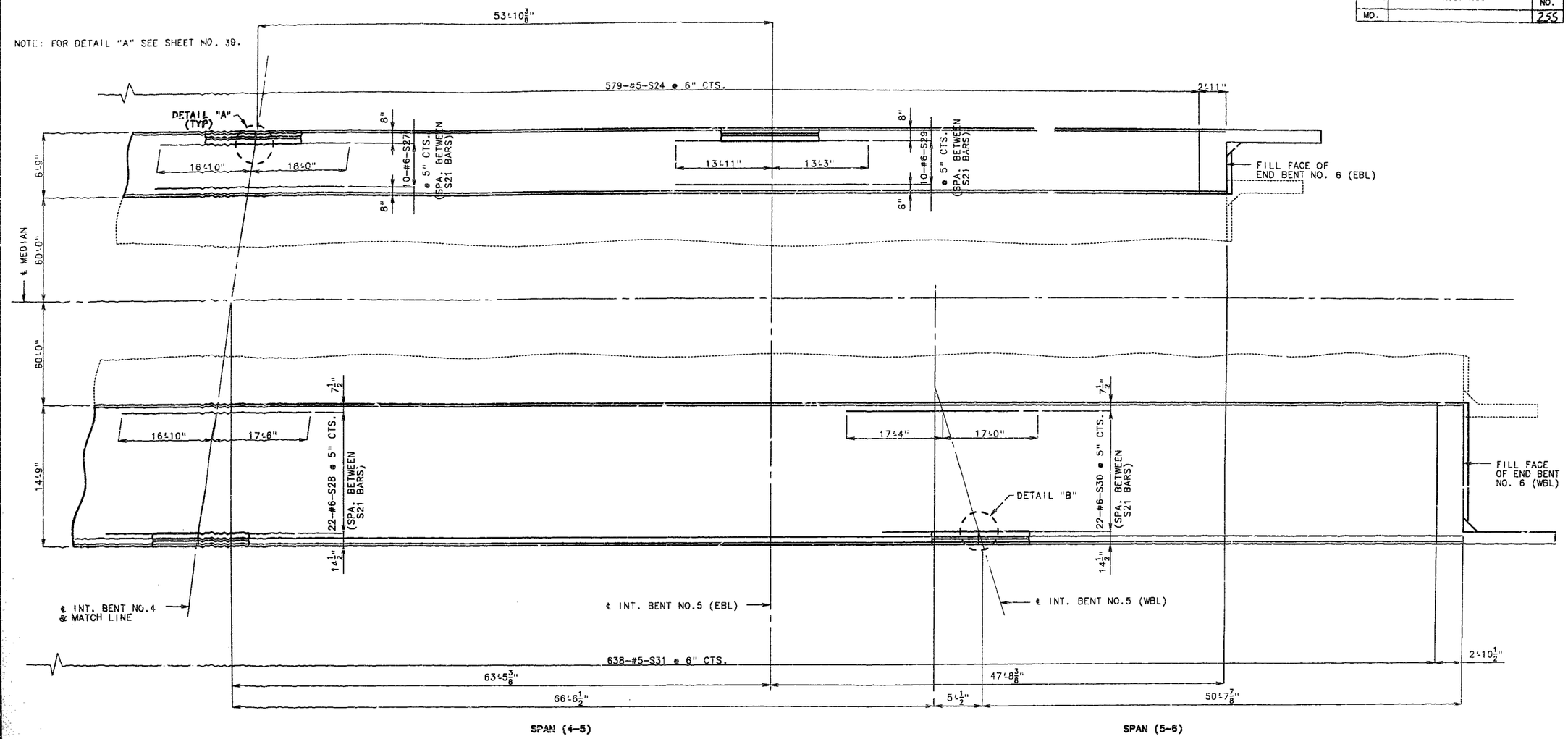

PLAN SHOWING TOP SLAB REINFORCEMENT
STAGE 2 CONSTRUCTION

THE CONTRACTOR SHALL POUR AND SATISFACTORILY FINISH THE SLAB POURS (END TO END) AT A RATE OF NOT LESS THAN 25 CUBIC YARDS PER HOUR. CONCRETE SHALL BE POURED UPGRADE.

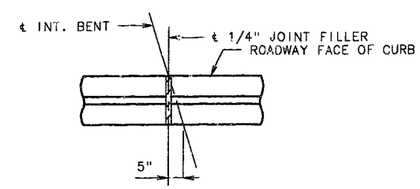

DETAIL "B"

DETAILED APR. 1993
CHECKED APR. 1993

NOTE: THIS DRAWING IS NOT TO SCALE. FOLLOW DIMENSIONS.

JACKSON COUNTY A-1427R1

388 234

STATE	PROJ. NO.	SHEET NO.
MO.		256

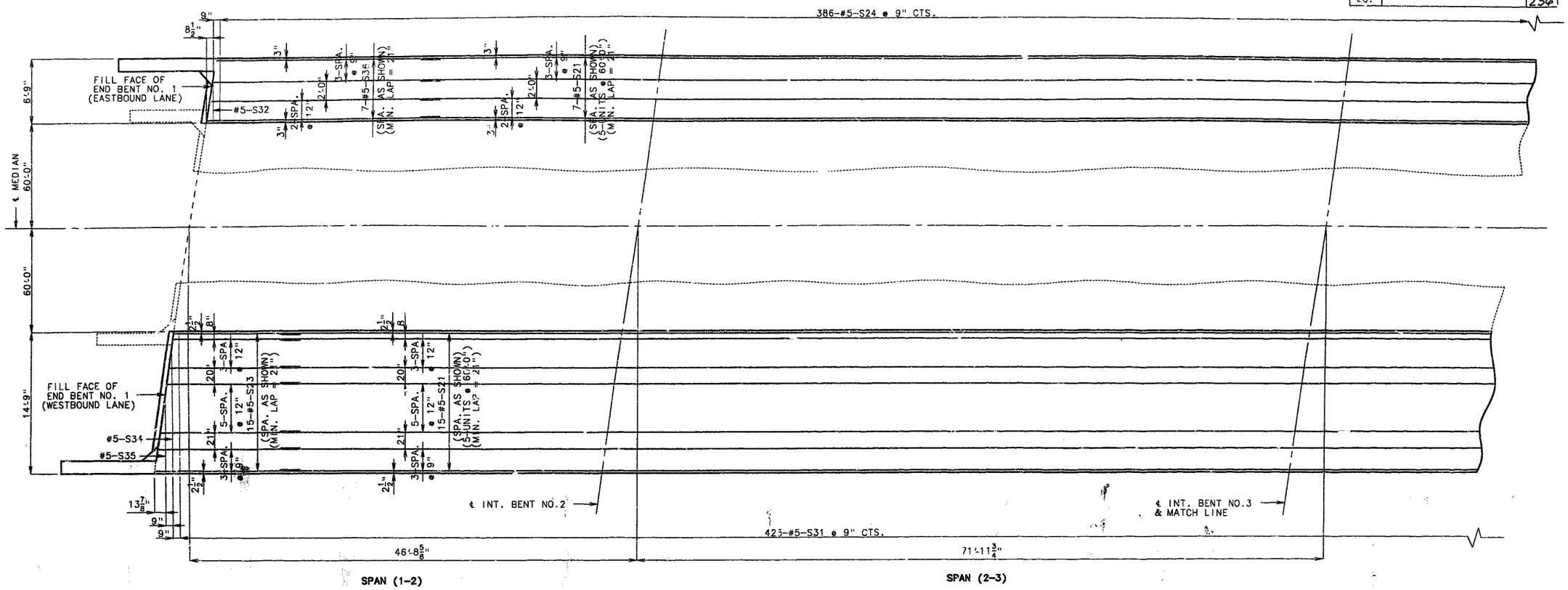

PLAN SHOWING BOTTOM SLAB REINFORCEMENT
STAGE 2 CONSTRUCTION

NOTE: LONGITUDINAL DIMENSIONS SHOWN ARE HORIZONTAL.

FOR DETAILS AND REINFORCEMENT OF SAFETY BARRIER CURB NOT SHOWN, SEE SHEETS NO. 47 & 48.

FOR CROSS SECTION THRU SLAB SEE SHEET NO. 39.

THE CONTRACTOR SHALL POUR AND SATISFACTORILY FINISH THE SLAB POURS (END TO END) AT A RATE OF NOT LESS THAN 25 CUBIC YARDS PER HOUR. CONCRETE SHALL BE POURED UPGRADE.

DETAILED APR. 1993
CHECKED APR. 1993

NOTE: THIS DRAWING IS NOT TO SCALE. FOLLOW DIMENSIONS.

JACKSON COUNTY A-1427R1

256 of 35

STATE	PROJ. NO.	SHEET NO.
MO.		257

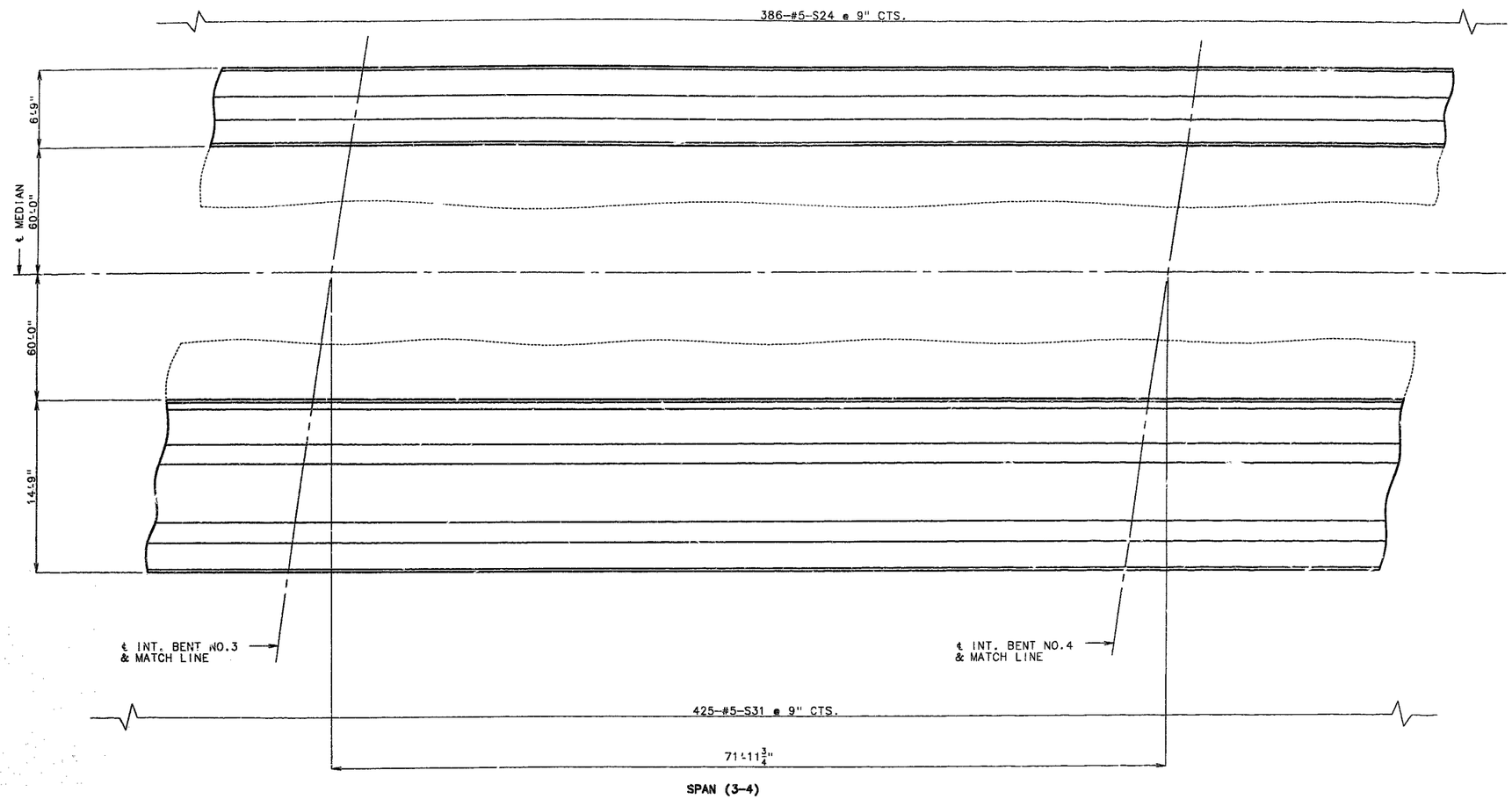

PLAN SHOWING BOTTOM SLAB REINFORCEMENT
STAGE 2 CONSTRUCTION

NOTE: LONGITUDINAL DIMENSIONS SHOWN ARE HORIZONTAL.

FOR DETAILS AND REINFORCEMENT OF SAFETY BARRIER CURB NOT SHOWN, SEE SHEETS NO. 47 & 48.

FOR CROSS SECTION THRU SLAB SEE SHEET NO. 39.

THE CONTRACTOR SHALL FOUR AND SATISFACTORILY FINISH THE SLAB POURS (END TO END) AT A RATE OF NOT LESS THAN 25 CUBIC YARDS PER HOUR. CONCRETE SHALL BE POURED UPGRADE.

DETAILED APR. 1993
CHECKED APR. 1993

NOTE: THIS DRAWING IS NOT TO SCALE. FOLLOW DIMENSIONS.

JACKSON COUNTY A-1427R1

292 231

STATE	PROJ. NO.	SHEET NO.
MO.		258

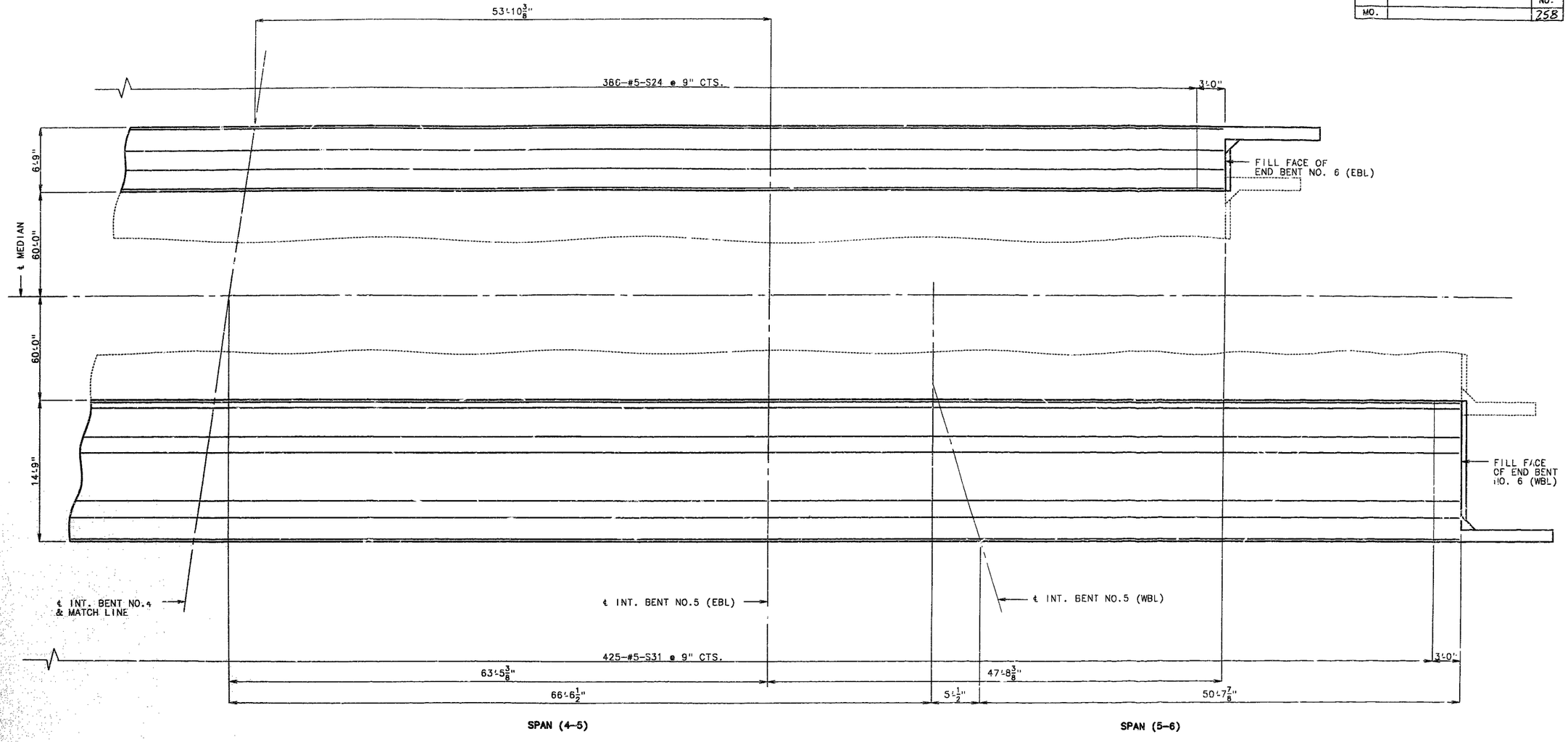

PLAN SHOWING BOTTOM SLAB REINFORCEMENT
STAGE 2 CONSTRUCTION

NOTE: LONGITUDINAL DIMENSIONS SHOWN ARE HORIZONTAL.

FOR DETAILS AND REINFORCEMENT OF SAFETY BARRIER CURB NOT SHOWN, SEE SHEETS NO. 47 & 48.

FOR CROSS SECTION THRU SLAB SEE SHEET NO. 39.

THE CONTRACTOR SHALL POUR AND SATISFACTORILY FINISH THE SLAB POURS (END TO END) AT A RATE OF NOT LESS THAN 25 CUBIC YARDS PER HOUR. CONCRETE SHALL BE POURED UPGRADE.

DETAILED APR. 1993
CHECKED APR. 1993

NOTE: THIS DRAWING IS NOT TO SCALE. FOLLOW DIMENSIONS.

JACKSON COUNTY A-1427R1

STATE	PROJ. NO.	SHEET NO.
MO.		259

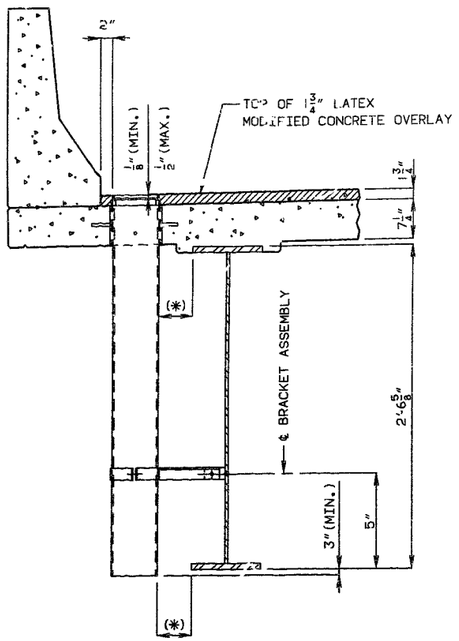

PART ELEVATION OF SLAB AT DRAIN

(*) IF DIMENSION IS LESS THAN 1", DRAINS SHALL BE PLACED PARALLEL TO ROADWAY, OTHERWISE PLACE DRAINS TRANSVERSE TO ROADWAY.

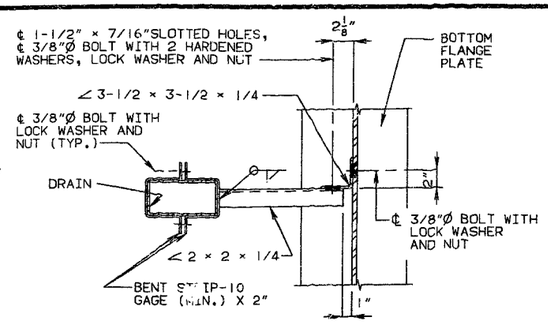

PART PLAN SHOWING BRACKET ASSEMBLY

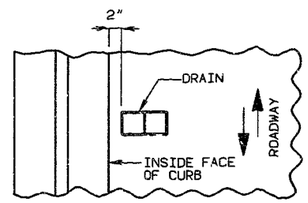

PART PLAN OF SLAB AT DRAIN

DETAILS OF DRAINS TRANSVERSE TO ROADWAY

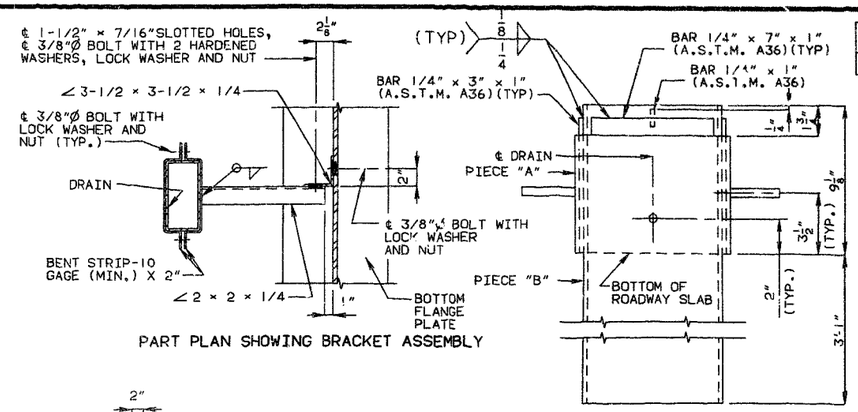

PART PLAN SHOWING BRACKET ASSEMBLY

ELEVATION OF DRAIN

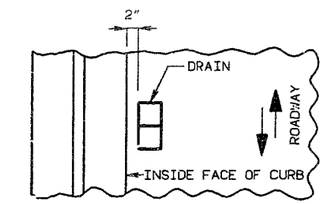

PART PLAN OF SLAB AT DRAIN

DETAILS OF DRAINS PARALLEL TO ROADWAY

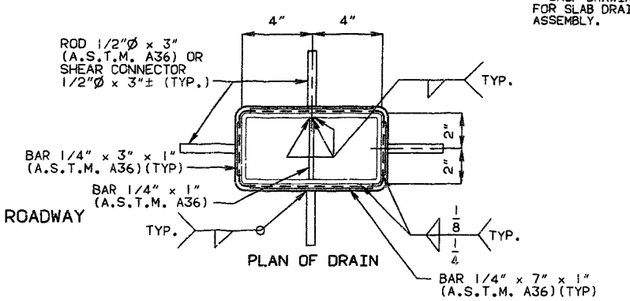

PLAN OF DRAIN

GENERAL NOTES:

SLAB DRAINS MAY BE FABRICATED OF EITHER 1/4" WELDED SHEETS OF A.S.T.M. A36 STEEL OR FROM 1/4" STRUCTURAL STEEL TUBING A.S.T.M. A500 OR A501.

OUTSIDE DIMENSIONS OF DRAINS ARE 8" × 4".

LOCATE DRAINS IN THE SLAB BY DIMENSIONS SHOWN IN THE PART ELEVATION.

SHIFT REINFORCING IN FIELD WHERE NECESSARY TO CLEAR DRAINS.

THE DRAINS AND BRACKET ASSEMBLY SHALL BE GALVANIZED IN ACCORDANCE WITH A.S.T.M. A123.

ALL BOLTS, HARDENED WASHERS, LOCK WASHERS AND NUTS SHALL BE GALVANIZED IN ACCORDANCE WITH A.S.T.M. A153.

THE BOLT HOLE FOR THE BRACKET ASSEMBLY ATTACHMENT SHALL BE LOCATED ON THE WIDE FLANGE BEAM SHOP DRAWINGS.

SHOP DRAWINGS WILL NOT BE REQUIRED FOR SLAB DRAINS AND THE BRACKET ASSEMBLY.

SLAB DRAIN DETAILS

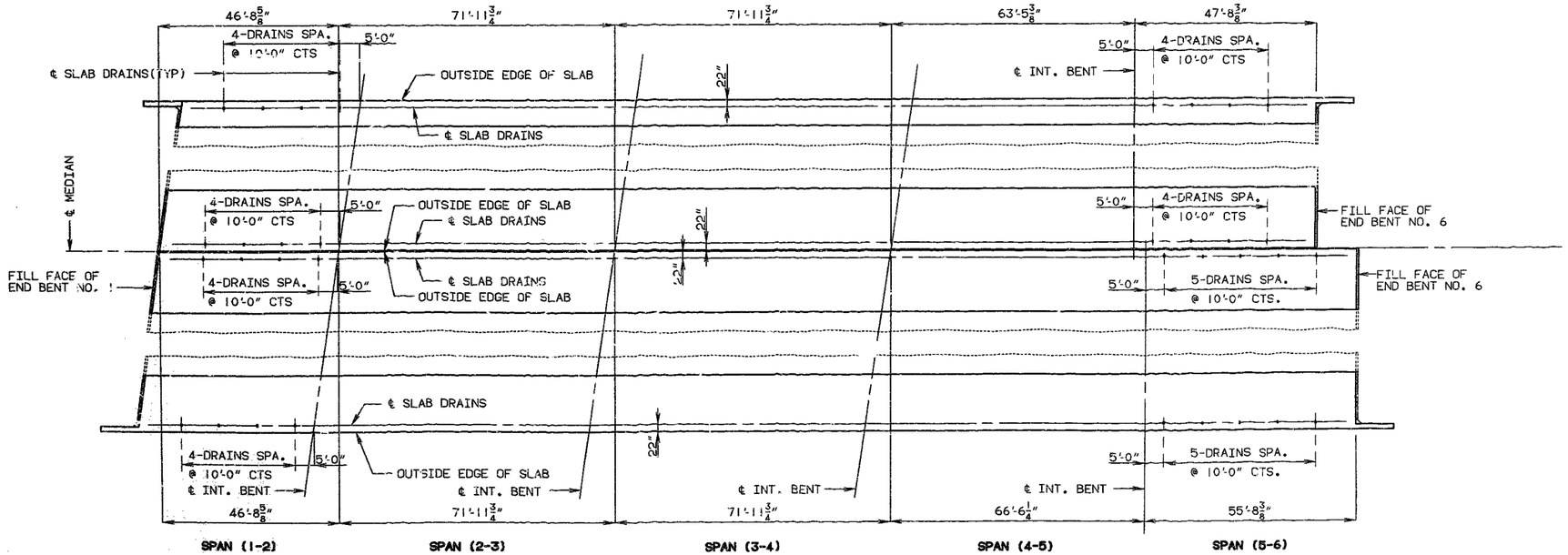

PART PLAN OF SLAB SHOWING SLAB DRAIN LOCATIONS

NOTE: THIS DRAWING IS NOT TO SCALE. FOLLOW DIMENSIONS.

SHEET NO. 45 OF 63.

JACKSON COUNTY

A-1427R1

DRAWN	REVISED
STEEL GDR DRAIN	
SEPT. 1992	

DETAILED APR. 1993
CHECKED APR. 1993

STATE	PROJ. NO.	SHEET NO.
MO.		260

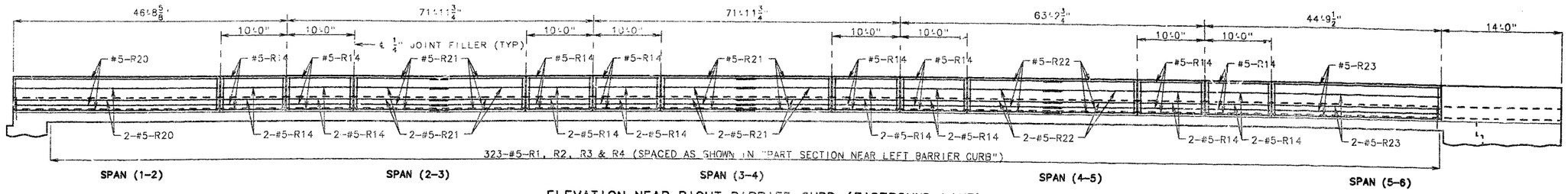

ELEVATION NEAR RIGHT BARRIER CURB (EASTBOUND LANE)

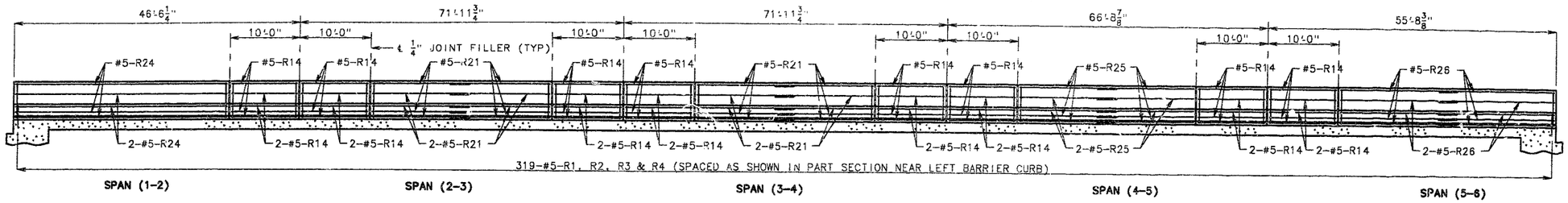

SECTION NEAR LEFT BARRIER CURB (WESTBOUND LANE)

NOTE: DIMENSIONS SHOWN ARE HORIZONTAL.

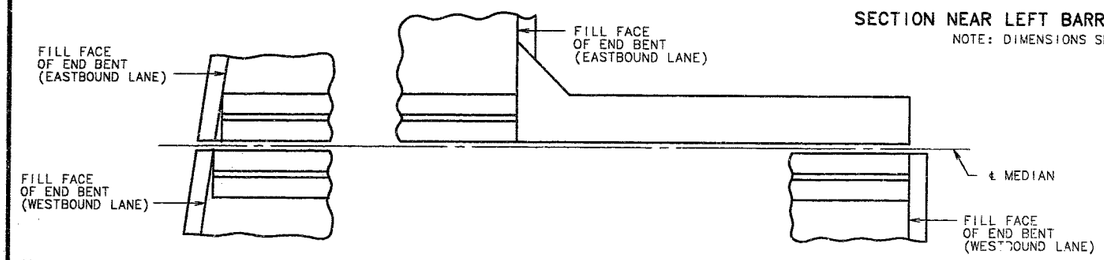

PART PLAN OF SAFETY BARRIER NEAR MEDIAN AT END BENTS

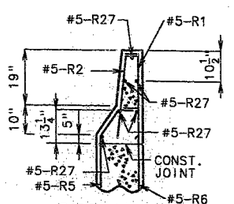

PART SECTION B-B

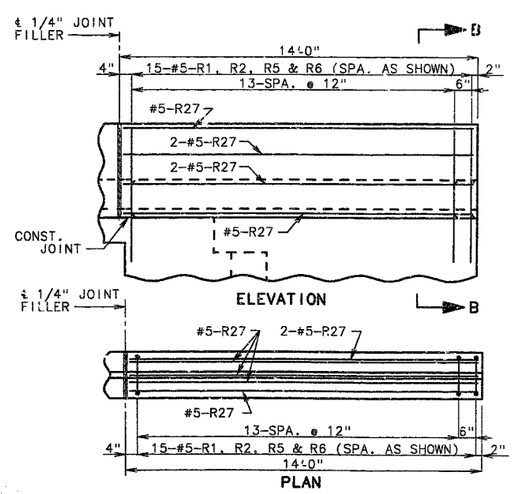

DETAILS OF SAFETY BARRIER CURB AT END BENT NO.6

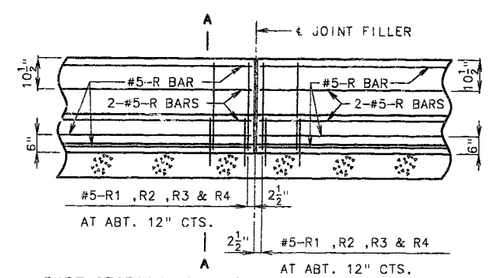

PART SECTION NEAR LEFT SAFETY BARRIER CURB (CAST-IN-PLACE CONVENTIONAL FORMING OPTION)

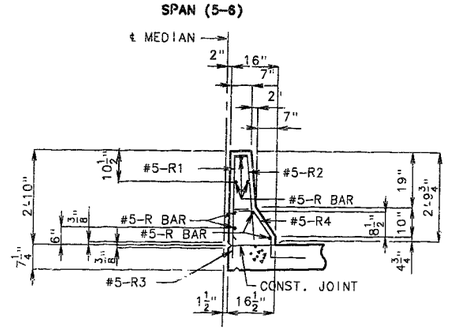

PART SECTION A-A

NOTE: USE A MINIMUM LAP OF 17" FOR #5 HORIZONTAL SAFETY BARRIER CURB BARS.
THE CROSS-SECTIONAL AREA ABOVE THE SLAB = 2.46 SQ. FT.

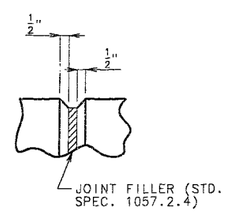

FILLED JOINT DETAIL

NOTE:

TOP OF SAFETY BARRIER CURB SHALL BE BUILT PARALLEL TO GRADE WITH SAFETY BARRIER CURB JOINTS (EXCEPT AT END BENTS) NORMAL TO GRADE.

ALL EXPOSED EDGES OF SAFETY BARRIER CURB SHALL HAVE EITHER A 1/2" RADIUS OR A 3/8" BEVEL, UNLESS OTHERWISE NOTED.

WHEN THE SAFETY BARRIER CURB IS BID BY LINEAR FEET, THE CONTRACT UNIT PRICE SHALL INCLUDE THE COST OF ALL CONCRETE AND REINFORCEMENT, COMPLETE-IN-PLACE.

CONCRETE IN THE SAFETY BARRIER CURB SHALL BE CLASS B1.

MEASUREMENT OF SAFETY BARRIER CURB IS TO THE NEAREST LINEAR FOOT FOR EACH STRUCTURE, MEASURED ALONG THE OUTSIDE TOP OF SLAB FROM FILL FACE TO FILL FACE.

B/C EL16-CS-3.30
BARRIER CURB ELEVATION
JAN. 1990
REVISED FEB. 1991

DETAILED APR. 1993
CHECKED APR. 1993

NOTE: THIS DRAWING IS NOT TO SCALE. FOLLOW DIMENSIONS.

DETAILS OF SAFETY BARRIER CURB (STAGE 1 CONSTRUCTION)

JACKSON COUNTY A-1427R1

STATE	PROJ. NO.	SHEET NO.
MO.		261

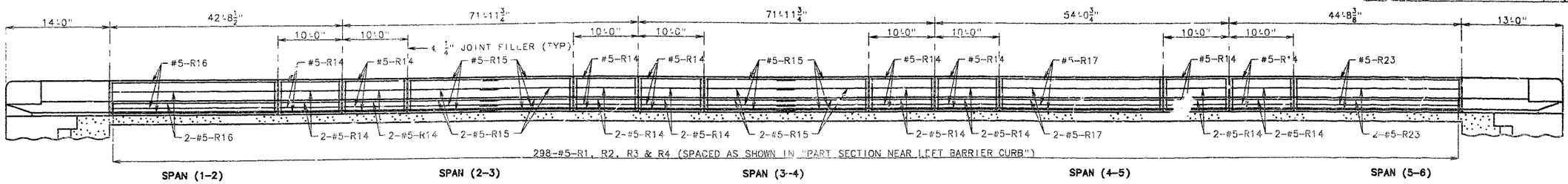

SECTION NEAR LEFT BARRIER CURB (EASTBOUND LANE)

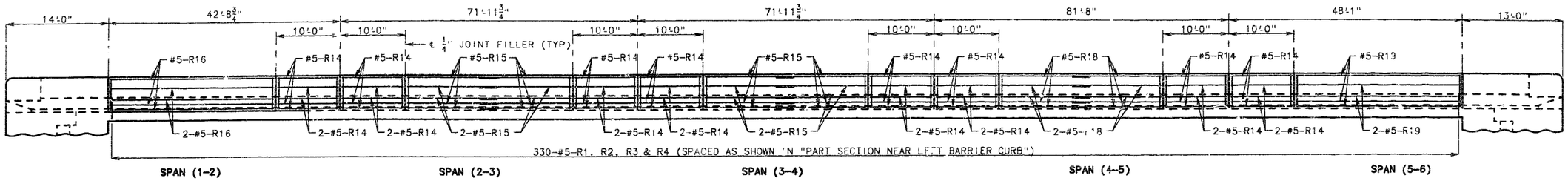

ELEVATION NEAR RIGHT BARRIER CURB (WESTBOUND LANE)

NOTE: DIMENSIONS SHOWN ARE HORIZONTAL.

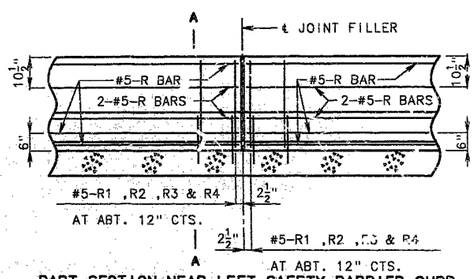

PART SECTION NEAR LEFT SAFETY BARRIER CURB (CAST-IN-PLACE CONVENTIONAL FORMING OPTION)

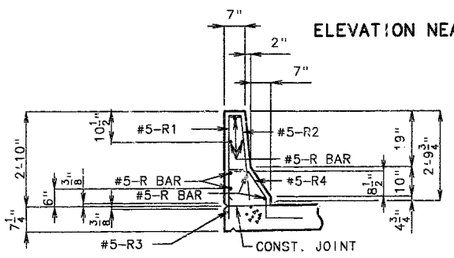

PART SECTION A-A

NOTE: USE A MINIMUM LAP OF 17" FOR #5 HORIZONTAL SAFETY BARRIER CURB BARS.
THE CROSS-SECTIONAL AREA ABOVE THE SLAB = 2.46 SQ. FT.

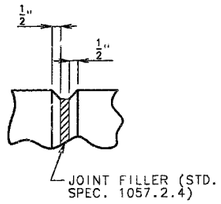

FILLED JOINT DETAIL

NOTE:

TOP OF SAFETY BARRIER CURB SHALL BE BUILT PARALLEL TO GRADE WITH SAFETY BARRIER CURB JOINTS (EXCEPT AT END BENTS) NORMAL TO GRADE.

ALL EXPOSED EDGES OF SAFETY BARRIER CURB SHALL HAVE EITHER A 1/2" RADIUS OR A 3/8" BEVEL, UNLESS OTHERWISE NOTED.

WHEN THE SAFETY BARRIER CURB IS BID BY LINEAR FEET, THE CONTRACT UNIT PRICE SHALL INCLUDE THE COST OF ALL CONCRETE AND REINFORCEMENT, COMPLETE-IN-PLACE.

CONCRETE IN THE SAFETY BARRIER CURB SHALL BE CLASS B1.

MEASUREMENT OF SAFETY BARRIER CURB IS TO THE NEAREST LINEAR FOOT FOR EACH STRUCTURE, MEASURED ALONG THE OUTSIDE TOP OF SLAB FROM END OF WING TO END OF WING.

FOR DETAILS OF RUSTICATION SEE SHEET NO. 48.

DETAILS OF SAFETY BARRIER CURB (STAGE 2 CONSTRUCTION)

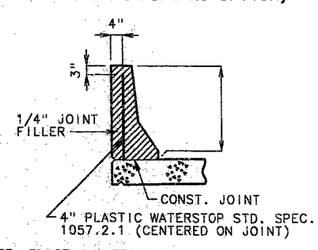

NOTE: PLASTIC WATERSTOP SHALL BE PLACED IN ALL SAFETY BARRIER CURB FILLED JOINTS. (EXCEPT STRUCTURES WITH SUPERELEVATION, USE ON ALL LOWER SAFETY BARRIER CURB JOINTS ONLY).

COST OF PLASTIC WATERSTOP COMPLETE IN PLACE TO BE INCLUDED IN CONTRACT UNIT PRICE FOR SAFETY BARRIER CURB.

DETAILS OF PLASTIC WATERSTOP

B/C EL16.GS 3.30 ... A
BARRIER CURB ELEVATION
JAN. 1990 ... 1991

DETAILED APR. 1993
CHECKED APR. 1993

NOTE: THIS DRAWING IS NOT TO SCALE. FOLLOW DIMENSIONS.

JACKSON COUNTY A-1427R1

STATE	PROJ. NO.	SHEET NO.
MO.		262

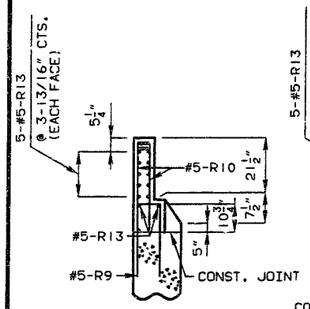

PART SECTION A-A

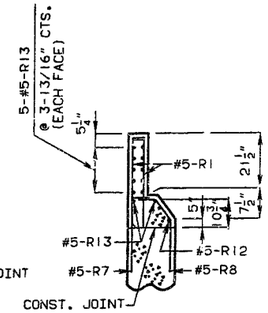

PART SECTION B-B

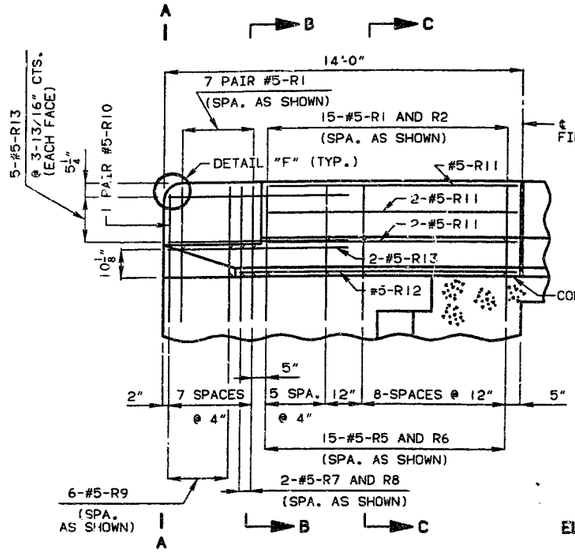

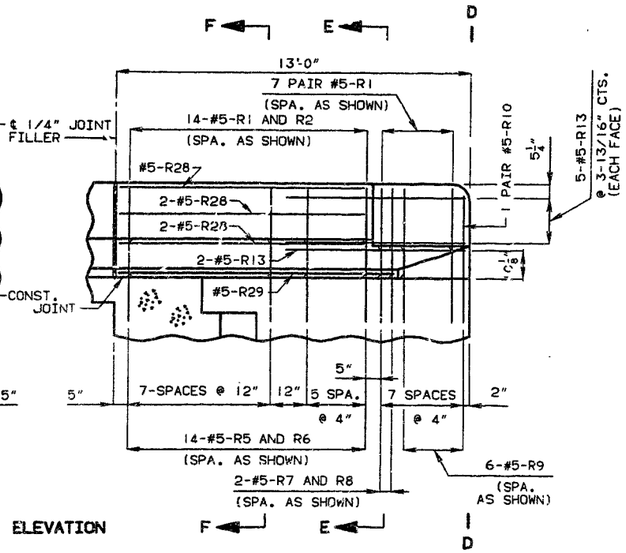

ELEVATION

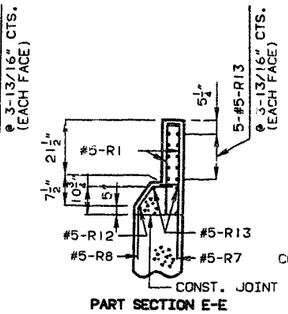

PART SECTION E-E

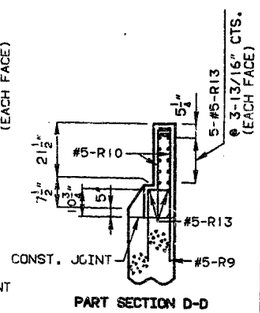

PART SECTION D-D

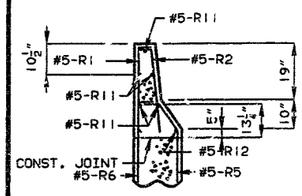

PART SECTION C-C

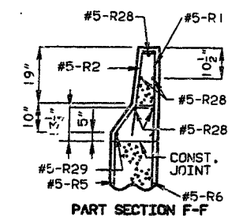

PART SECTION F-F

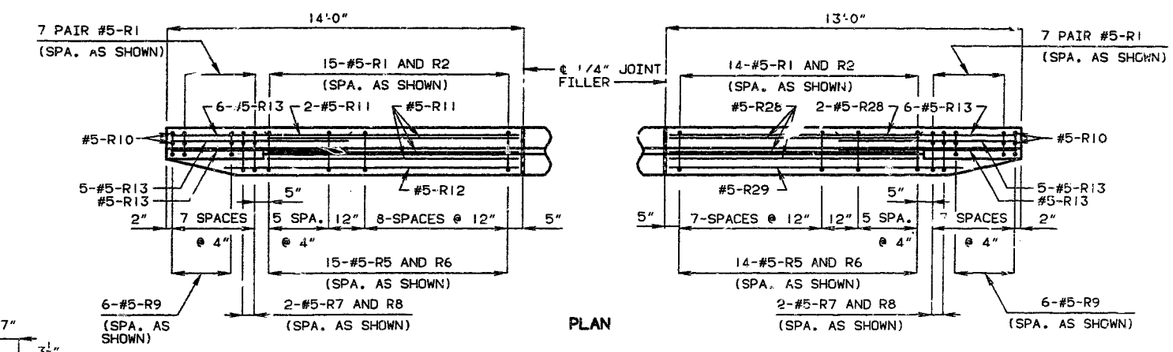

PLAN

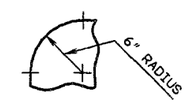

DETAIL "F" (TYPICAL)

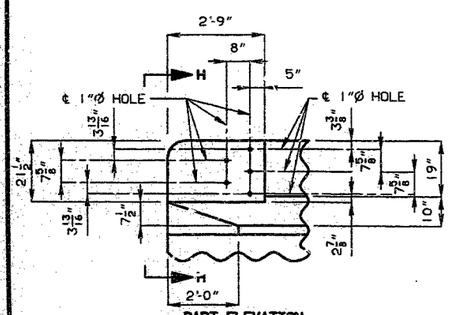

PART ELEVATION

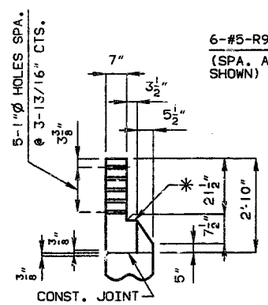

PART SECTION H-H

* SLOPE 1/4" TOWARD ROADWAY

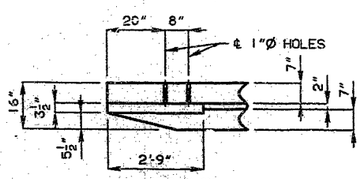

PART PLAN

DETAILS OF GUARD RAIL ATTACHMENT

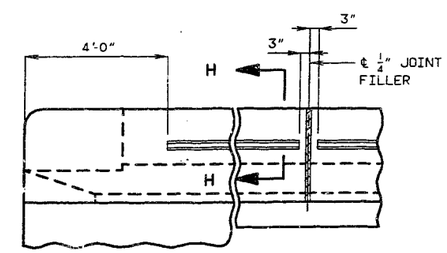

AT END OF WING AT JOINT FILLER

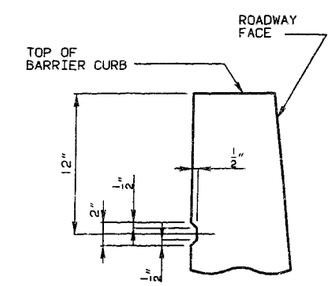

SECTION H-H

DETAILS OF RUSTICATION

DETAILS OF SAFETY BARRIER CURB AT END BENTS
STAGE 2 CONSTRUCTION

DETAILED APR. 1993
CHECKED APR. 1993

NOTE: THIS DRAWING IS NOT TO SCALE. FOLLOW DIMENSIONS.

SHEET NO. 48 OF 63.

JACKSON COUNTY

A-1427R1

322 341

STATE	PROJ. NO.	SHEET NO.
MO.		263

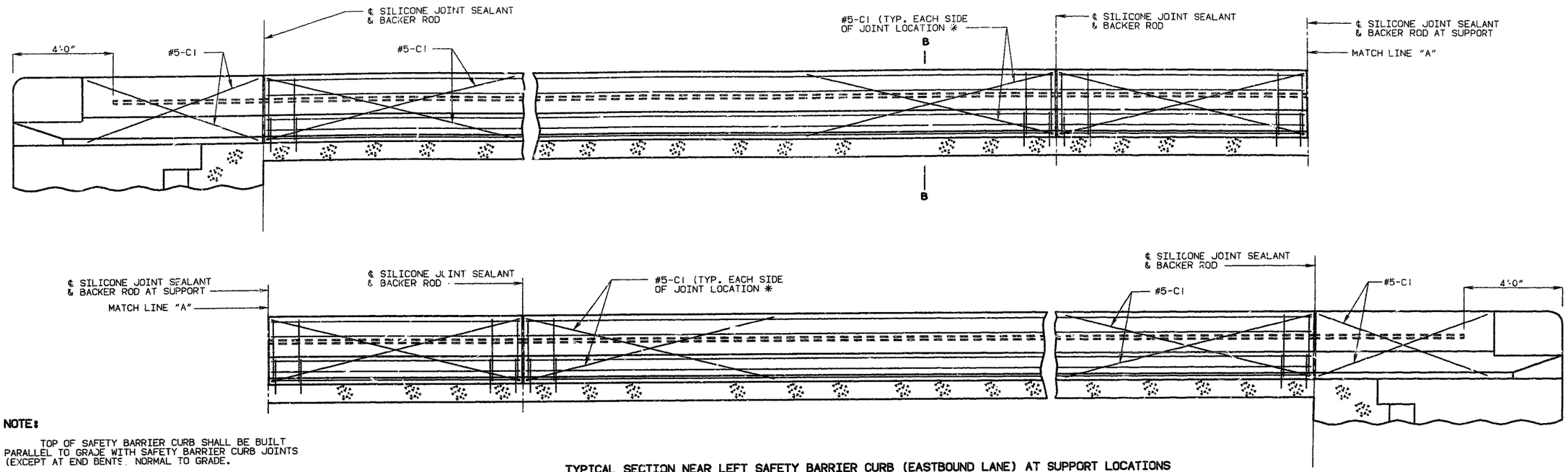

NOTE:

TOP OF SAFETY BARRIER CURB SHALL BE BUILT PARALLEL TO GRADE WITH SAFETY BARRIER CURB JOINTS (EXCEPT AT END BENTS) NORMAL TO GRADE.

WHEN THE SAFETY BARRIER CURB IS BID BY LINEAR FEET, THE CONTRACT UNIT PRICE SHALL INCLUDE THE COST OF ALL CONCRETE AND REINFORCEMENT, COMPLETE-IN-PLACE.

CONCRETE IN THE SAFETY BARRIER CURB SHALL BE CLASS B1.

MEASUREMENT OF SAFETY BARRIER CURB IS TO THE NEAREST LINEAR FOOT FOR EACH STRUCTURE, MEASURED ALONG THE OUTSIDE TOP OF SLAB FROM END OF WING TO END OF WING.

TYPICAL SECTION NEAR LEFT SAFETY BARRIER CURB (EASTBOUND LANE) AT SUPPORT LOCATIONS
(OPTIONAL SLIP-FORM BRIDGE SAFETY BARRIER CURB)
RIGHT SIDE (WESTBOUND LANE) SIMILAR

NOTE:

JOINT SEALANT AND BACKER RODS SHALL BE USED ON ALL SLIP-FORM BRIDGE SAFETY BARRIER CURBS INSTEAD OF JOINT FILLER.

PLASTIC WATERSTOP SHALL NOT BE USED WITH SLIP-FORM OPTION.

C BARS (SLIP-FORM OPTION ONLY) SHALL BE USED IN ADDITION TO CAST-IN-PLACE CONVENTIONAL FORMING REINFORCEMENT FOR BRIDGE SAFETY BARRIER CURB.

NOTE:

SECTION NEAR LEFT BARRIER CURB (WESTBOUND LANE) AT SUPPORT LOCATIONS AND RIGHT SIDE (EASTBOUND LANE) ARE SIMILAR EXCEPT THAT THE END POSTS SHALL BE OMITTED.

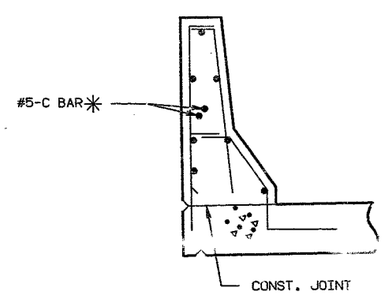

PART SECTION B-B

NOTE: ✳ EACH SIDE OF JOINT LOCATION.

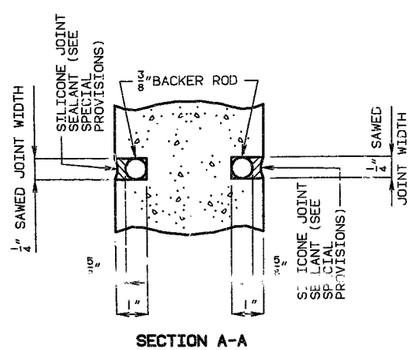

SECTION A-A

NOTE: COST OF SILICONE JOINT SEALANT AND BACKER ROD COMPLETE IN PLACE TO BE INCLUDED IN THE CONTRACT UNIT PRICE FOR SAFETY BARRIER CURB.

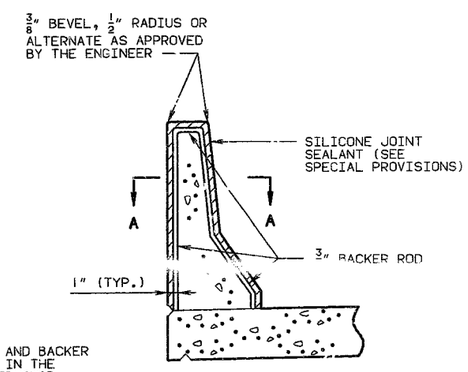

SECTION THRU JOINT

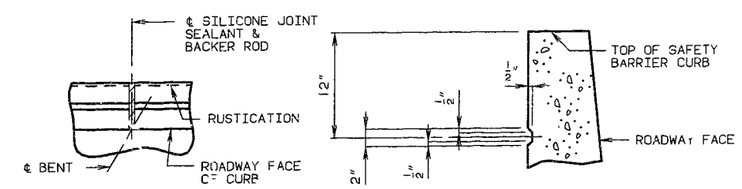

PART PLAN SHOWING SAFETY BARRIER CURB JOINT

PART SECTION SHOWING RUSTICATION DETAILS

RUSTICATION DETAIL

OPTIONAL SLIP-FORM BRIDGE SAFETY BARRIER CURB

B/C SF16,GS 3.30, , 1A
BARRIER CURB ELEVATION
REVISED:
FEB. 1991

DETAILED MAR. 1993
CHECKED APR. 1993

NOTE: THIS DRAWING IS NOT TO SCALE. FOLLOW DIMENSIONS.

JACKSON COUNTY A-1427R1

BILL OF REINFORCING STEEL

NO. REQ'D.	MARK NO. (SIZE MARK)	LOCATION	EPOXY (E)	SHAPE NO.	STIRRUP (S)	SUBSTR. (X)	VARIES (V)	NO. EACH	B FT. IN.	C FT. IN.	D FT. IN.	E FT. IN.	F FT. IN.	H FT. IN.	K FT. IN.	NOMINAL LENGTH FT. IN.	ACTUAL LENGTH FT. IN.	WEIGHT LBS.
		SUBSTRUCTURE																
		INT.BT.NO.2																
4	6D20	FOOTING		10		X				4 1.000	8 8.000					14 10	14 6	87
20	8D21	FOOTING		20		X			8 9.000							8 9	8 9	437
10	6D22	FOOTING		20		X			6 9.000							6 9	6 9	101
36	8D23	FOOTING		20		X			6 8.000							6 8	6 8	641
4	6D24	FOOTING		10		X				4 3.000	8 0.000					16 6	16 2	97
10	6D25	FOOTING		20		X			7 1.000							7 1	7 1	106
6	8H20	BEAM		18		X			12 3.000							14 1	14 1	226
2	6H21	BEAM		20		X			14 3.000							14 3	14 3	43
2	8H22	BEAM		18		X			14 3.000							16 1	16 1	86
4	8H23	BEAM		18		X			13 8.000							15 4	15 4	164
4	8H24	BEAM		18		X			6 5.000							8 3	8 3	88
2	6H25	BEAM		20		X			6 5.000							6 5	6 5	19
12	8H26	BEAM		18		X			25 1.000							26 11	26 11	862
2	6H27	BEAM		20		X			25 1.000							25 1	25 1	75
8	8H28	BEAM		18		X			5 8.000							7 6	7 6	160
76	4P20	COLUMN		16		X			2 3.000							7 11	7 11	402
64	6U20	BEAM		13	S	X			2 5.000	2 9.000	2 5.000	2 9.000				11 8	11 2	1073
8	4U21	BEAM		10	S	X				6.000	2 5.000					3 5	3 3	17
2	6U22	BEAM		13	S	X			2 5.000	2 9.000	2 5.000	2 9.000				11 8	11 2	34
7	6U23	BEAM		13	S	X			2 5.000	3 0.750	2 5.000	3 0.750				12 4	11 10	124
2	6U24	BEAM		10	S	X				2 2.000	2 7.000					6 11	6 7	20
2	6U25	BEAM		10	S	X				2 2.000	3 0.750					7 5	7 1	21
27	8V20	COLUMN		20		X			21 3.000							21 3	21 3	1532
9	8V21	COLUMN		20		X			21 11.000							21 11	21 11	527
14	W5W20	A.B.WELL		22		X			15.000	9.125						23 0	23 0	54
		INT.BT.NO.3																
8	6D30	FOOTING		10		X				4 1.000	8 0.000					16 2	15 10	190
20	8D31	FOOTING		20		X			8 9.000							8 9	8 9	467
20	6D32	FOOTING		20		X			6 9.000							6 9	3 9	203
80	9D33	FOOTING		17		X			8 11.000							10 2	10 2	2765
6	8H30	BEAM		18		X			12 3.000							14 1	14 1	226
2	6H31	BEAM		20		X			14 3.000							14 3	14 3	43
2	8H32	BEAM		18		X			14 3.000							16 1	16 1	86
4	8H33	BEAM		18		X			13 6.000							15 4	15 4	164
4	8H34	BEAM		18		X			6 5.000							8 3	8 3	88
2	6H35	BEAM		20		X			6 5.000							6 5	6 5	19
12	8H36	BEAM		18		X			25 1.000							26 11	26 11	862
2	6H37	BEAM		20		X			25 1.000							25 1	25 1	75
8	8H38	BEAM		18		X			5 8.000							7 6	7 6	160
92	4P30	COLUMNS		16		X			2 3.000							7 11	7 11	487
64	6U30	BEAM		13	S	X			2 5.000	2 9.000	2 5.000	2 9.000				11 8	11 2	1073
8	4U31	BEAM		10	S	X				6.000	2 5.000					3 5	3 3	17
2	6U32	BEAM		13	S	X			2 5.000	2 6.375	2 5.000	2 6.375				11 3	10 9	32

BILL OF REINFORCING STEEL

NO. REQ'D.	MARK NO. (SIZE MARK)	LOCATION	EPOXY (E)	SHAPE NO.	STIRRUP (S)	SUBSTR. (X)	VARIES (V)	NO. EACH	B FT. IN.	C FT. IN.	D FT. IN.	E FT. IN.	F FT. IN.	H FT. IN.	K FT. IN.	NOMINAL LENGTH FT. IN.	ACTUAL LENGTH FT. IN.	WEIGHT LBS.
7	6U33	BEAM		13	S	X			2 5.000	3 0.750	2 5.000	3 0.750				12 4	11 10	124
2	6U34	BEAM		10	S	X				2 2.000	2 6.375					6 10	6 7	20
2	6U35	BEAM		10	S	X				2 2.000	3 0.750					7 5	7 1	21
40	9V30	COLUMN		17		X			24 1.000							25 4	25 4	3445
20	9V31	COLUMN		17		X			27 1.000							28 4	28 4	1927
20	9V32	COLUMN		17		X			24 8.000							25 11	25 11	1762
14	W5W30	A.B.WELL		22		X			15.000	9.125						23 0	23 0	54
		INT.BT.NO.4																
8	6D40	FOOTING		10		X				4 1.000	8 0.000					16 2	15 10	190
24	8D41	FOOTING		20		X			8 9.000							8 9	8 9	561
24	6D42	FOOTING		20		X			6 9.000							6 9	6 9	243
52	9D43	FOOTING		17		X			7 11.000							9 2	9 2	1621
6	8H40	BEAM		18		X			12 3.000							14 1	14 1	226
2	6H41	BEAM		20		X			14 3.000							14 3	14 3	43
2	8H42	BEAM		18		X			14 3.000							16 1	16 1	86
4	8H43	BEAM		18		X			13 8.000							15 4	15 4	164
4	8H44	BEAM		18		X			5 5.000							8 3	8 3	88
2	6H45	BEAM		20		X			6 5.000							6 5	6 5	19
12	8H46	BEAM		18		X			25 1.000							26 11	26 11	862
2	6H47	BEAM		20		X			25 1.000							25 1	25 1	75
8	8H48	BEAM		18		X			5 8.000							7 6	7 6	160
3	6H400	COLL.WALL		20		X			39 6.000							39 6	39 6	178
22	5H401	COLL.WALL		20		X			40 4.000							40 4	40 4	925
2	5H402	COLL.WALL		20		X			31 6.000							31 6	31 6	66
3	6H403	COLL.WALL		20		X			31 1.000							31 1	31 1	140
5	6H404	COLL.WALL		20		X			10 11.000							10 11	10 11	82
22	5H405	COLL.WALL		20		X			8 2.000							8 2	8 2	187
10	6H406	COLL.WALL		20		X			8 2.000							8 2	8 2	123
12	6H407	COLL.WALL		20		X			14 6.000							14 8	14 6	261
44	5H408	COLL.WALL		20		X			15 4.000							15 4	15 4	704
13	5H409	COLL.WALL		7		X			3 8.500	2 3.500						8 8	8 8	118
14	5H410	COLL.WALL		7		X			3 8.500	2 3.500						8 8	8 8	127
24	5H411	COLL.WALL		20		X			14 8.000							14 8	14 8	367
10	6H412	COLL.WALL		20		X			14 8.000							14 8	14 8	220
12	6H413	COLL.WALL		20		X			14 6.000							14 6	14 6	261
48	5H414	COLL.WALL		20		X			15 4.000							15 4	15 4	768
2	6H415	COLL.WALL		20		X			40 4.000							40 4	40 4	121
2	6H416	COLL.WALL		20		X			31 6.000							31 6	31 6	95
8	5H417	COLL.WALL		20		X			15 4.000							15 4	15 4	184
8	5H418	COLL.WALL		20		X			15 4.000							15 4	15 4	184
105	4P40	COLUMNS		16		X			2 3.000							7 11	7 11	555
64	6U40	BEAM		13	S	X			2 5.000	2 9.000	2 5.000	2 9.000				11 8	11 2	1073
8	4U41	BEAM		10	S	X				6.000	2 5.000					3 5	3 3	17
2	6U42	BEAM		10	S	X				2 2.000	3 0.750					7 5	7 1	21
7	6U43	BEAM		13	S	X			2 5.000	3 0.750	2 5.000	3 0.750				12 4	11 10	124
2	6U44	BEAM		10	S	X				2 2.000	2 6.750					6 11	6 7	20
39	9V40	COLUMNS		20		X			18 9.000							18 9	18 9	2486
12	5V41	COLL.WALL		20		X			12 6.000							12 6	12 6	156
107	5V42	COLL.WALL		20		X			13 6.000							13 6	13 6	1507
26	9V43	COLUMNS		17		X			14 10.000							16 1	16 1	1422

STATE	PROJ. NO.	SHEET NO.
MO.		264

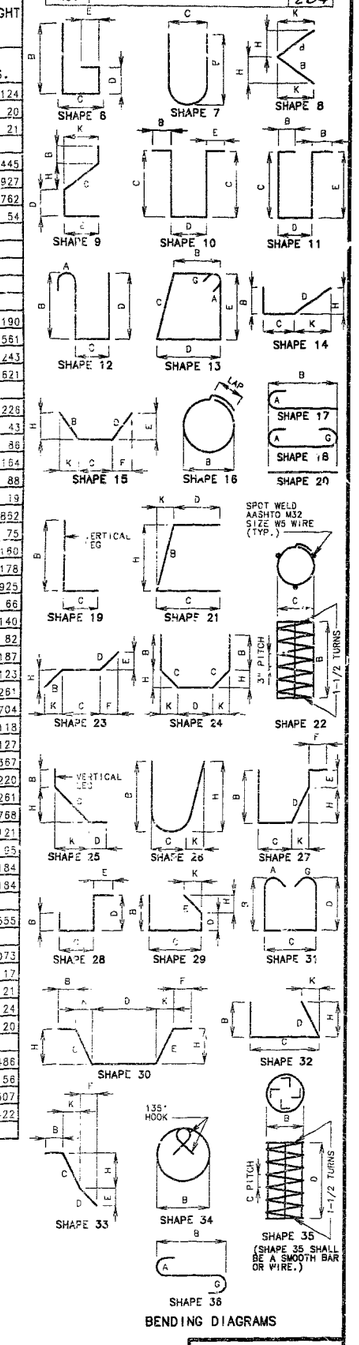

BENDING DIAGRAMS

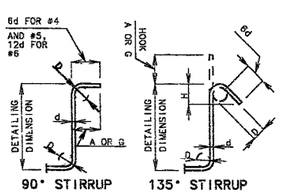

STIRRUP HOOK DIMENSIONS				
GRADES 40 – 50 – 60 KSI				
BAR SIZE	D (IN.)	90° HOOK	135° HOOK	
		HOOK A OR G	HOOK A OR G	APPROX. U
#4	2"	4-1/2"	4-1/2"	3"
#5	2-1/2"	6"	5-1/2"	3-3/4"
#6	4-1/2"	12"	8"	4 1/2"

NOTE: UNLESS OTHERWISE NOTED DIAMETER "D" IS THE SAME FOR ALL BENDS AND HOOKS ON A BAR.

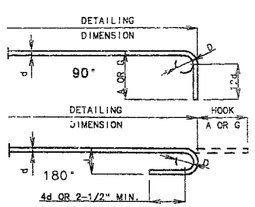

END HOOK DIMENSIONS				
		ALL GRADES		
BAR SIZE	D (IN.)	180° HOOKS		90° HOOKS
		A OR G	J	A OR G
#3	2-1/4"	5"	3"	6"
#4	3"	6"	4"	8"
#5	3-3/4"	7"	5"	10"
#6	4-1/2"	8"	6"	12"
#7	5-1/4"	10"	7"	14"
#8	6"	11"	8"	16"
#9	9-1/2"	15"	11-3/4"	19"
#10	10-3/4"	17"	13-1/4"	22"
#11	12"	19"	14-3/4"	2'-0"
#14	12-1/4"	2'-3"	21-3/4"	2'-7"

NOTE:
ALL STANDARD HOOKS AND BENDS OTHER THAN 180 DEG. TO BE BENT WITH THE SAME PROCEDURE AS FOR 90 DEG. STD. HOOKS.
HOOKS AND BENDS SHALL BE IN ACCORDANCE WITH THE PROCEDURES AS SHOWN ON THIS SHEET.
E = EPOXY COATED REINFORCEMENT.
S = STIRRUP.
X = BAR IS INCLUDED IN SUBSTRUCTURE QUANTITIES.
V = BAR DIMENSIONS VARY IN EQUAL INCREMENTS BETWEEN DIMENSIONS SHOWN ON THIS LINE AND THE FOLLOWING LINE.
NO. EA. = NUMBER OF BARS OF EACH LENGTH.
NOMINAL LENGTHS ARE BASED ON OUT TO OUT DIMENSIONS SHOWN IN BENDING DIAGRAMS AND ARE LISTED FOR FABRICATORS USE. (NEAREST INCH)
ACTUAL LENGTHS ARE MEASURED ALONG CENTERLINE BAR TO THE NEAREST INCH.
PAYWEIGHTS ARE BASED ON ACTUAL LENGTHS.
FOUR ANGLE OR CHANNEL SPACERS ARE REQUIRED FOR EACH COLUMN SPIRAL. SPACERS ARE TO BE PLACED ON INSIDE OF SPIRALS. LENGTH AND WEIGHT OF COLUMN SPIRALS DO NOT INCLUDE SPLICES OR SPACERS.
REINFORCING STEEL (GRADE 60) = FY 60,000 PSI.

NOTE: THIS DRAWING IS NOT TO SCALE. FOLLOW DIMENSIONS.

STD 90.6	REVISED
MAY 1974	OCT. 1991

DETAILED JULY 1993
CHECKED JULY 1993

SHEET NO. 50 OF 63.

JACKSON COUNTY A-1427R1

BILL OF REINFORCING STEEL

NO. REQ'D.	MARK NO. / SIZE MARK	LOCATION	EPOXY (E)	SHAPE NO.	STIRRUP (S)	SUBSTR. (X)	VARIES (V)	NO. EACH	B FT. IN.	C FT. IN.	D FT. IN.	E FT. IN.	F FT. IN.	H FT. IN.	K FT. IN.	NOMINAL LENGTH FT. IN.	ACTUAL LENGTH FT. IN.	WEIGHT LBS.
13	9V44	COLUMN		20		X			17 9.000							17 9	17 9	785
13	9V45	COLUMN		20		X			15 4.000							15 4	15 4	678
57	5V46	COLL.WALL		20		X			12 6.000							12 6	12 6	743
13	9V47	COLUMN		17		X			14 1.000							16 0	16 0	707
14	W5W40	A.B.WELL		22		X			15.000	9.125						23 0	23 0	54
		INT.BT.NO.5																
8	6D50	FOOTINGS		10	S	X				4 3.000	8 0.000					16 6	16 2	194
20	8D51	FOOTINGS		20		X			8 9.000							8 9	8 9	467
20	6D52	FOOTINGS		20		X			7 1.000							7 1	7 1	213
44	9D53	FOOTINGS		17		X			7 8.000							8 11	8 11	1334
4	6H51	BEAM		20		X			15 3.000							15 3	15 3	92
8	8H52	BEAM		18		X			15 3.000							17 1	17 1	365
16	8H53	BEAM		18		X			14 6.000							16 4	16 4	698
8	8H54	BEAM		18		X			6 0.000							7 10	7 10	167
2	6H55	BEAM		20		X			6 9.000							6 9	6 9	20
4	8H56	BEAM		18		X			6 9.000							8 7	8 7	92
2	6H57	BEAM		20		X			14 8.000							14 8	14 8	44
4	8H58	BEAM		18		X			14 8.000							16 6	16 6	176
8	8H59	BEAM		18		X			14 2.000							16 0	16 0	342
10	6H500	COLL.WALL		20		X			14 9.000							14 9	14 9	222
18	5H501	COLL.WALL		20		X			14 9.000							14 9	14 9	277
2	6H502	COLL.WALL		20		X			8 10.000							8 10	8 10	27
11	5H503	COLL.WALL		7		X			3 8.000	2 3.000						8 6	8 6	98
3	6H504	COLL.WALL		20		X			8 6.000							8 6	8 6	38
96	4P50	COLUMNS		16		X			2 3.000							7 11	7 11	508
62	6U50	BEAM		13	S	X			2 5.000	2 9.000	2 5.000	2 9.000				11 8	11 2	1040
8	4U51	BEAM		10	S	X				6.000	2 5.000					3 5	3 3	17
2	6U52	BEAM		10	S	X				22.000	3 2.125					6 10	6 6	20
9	6U53	BEAM		13	S	X			2 5.000	2 9.000	2 5.000	2 9.000				11 8	11 2	151
2	6U54	BEAM		10	S	X				22.000	2 8.250					6 4	6 1	19
4	6U55	BEAM		10	S	X				22.000	2 7.500					6 4	6 0	36
20	6U56	BEAM		13	S	X			2 5.000	3 2.125	2 5.000	3 2.125				12 6	12 1	363
22	9V50	COLUMNS		17		X			28 0.000							27 3	27 3	2038
11	9V51	COLUMN		17		X			26 4.000							27 7	27 7	1032
11	9V52	COLUMN		17		X			16 3.000							17 6	17 3	655
12	5V53	COLL.WALL		20		X			10 9.000							10 9	10 9	135
9	5V54	COLL.WALL		20		X			9 9.000							9 9	9 9	92
11	9V55	COLUMN		20		X			15 0.000							15 0	15 0	561
14	W5W50	A.B.WELL		22		X			15.000	9.125						23 0	23 0	54
		SUPERSTR.																
		END BT.NO.1																
5	6F1	WING BRACE		23					14.000	4 11.750	14.000	9.125	10.625	9.1 25	10.625	7 4	7 3	54
3	6F2	DIAPH.		21					2 5.875	4 11.000				2 5.6 25	4.250	7 5	7 2	32

BILL OF REINFORCING STEEL

NO. REQ'D.	MARK NO. / SIZE MARK	LOCATION	EPOXY (E)	SHAPE NO.	STIRRUP (S)	SUBSTR. (X)	VARIES (V)	NO. EACH	B FT. IN.	C FT. IN.	D FT. IN.	E FT. IN.	F FT. IN.	H FT. IN.	K FT. IN.	NOMINAL LENGTH FT. IN.	ACTUAL LENGTH FT. IN.	WEIGHT LBS.
5	6F3	WING BRACE		23					14.000	4 5.500	14.000	9.125	10.625	9.1 25	10.625	6 10	6 9	51
4	6F4	DIAPH.		23					2 5.500	4 8.250				2 5.2 50	4.250	7 2	7 0	42
12	6H1	DIAPH.		20					15 9.000							15 9	15 9	284
12	6H2	DIAPH.		20					15 3.000							15 3	15 3	275
2	4H3	CORBEL		20					16 9.000							16 9	16 9	22
24	6H4	BEAM		20					14 6.000							14 6	14 6	523
6	6H5	DIAPH.		20					14 7.000							14 7	14 7	131
6	6H6	DIAPH.		20					14 1.000							14 1	14 1	127
12	6H7	BEAM		20					13 4.000							13 4	13 4	240
6	6H8	DIAPH.		20					6 6.000							6 6	6 6	59
6	6H9	DIAPH.		20					6 0.000							6 0	6 0	54
12	6H10	BEAM		20					5 9.000							5 9	5 9	104
1	4H11	CORBEL		20					13 8.000							13 8	13 8	9
1	4H12	CORBEL		20					5 0.000							5 0	5 0	3
6	6H13	WING		20					11 5.000							11 5	11 5	103
10	6H14	WING		20			V	2	5 1.000							5 1	5 1	
		INCREMENT =							10 11.000							10 11	10 11	120
		17.500 INCH																
6	6H15	WING		20					11 7.000							11 7	11 7	104
12	6H16	WING		20			V	2	4 8.000							4 8	4 8	
		INCREMENT =							11 2.000							11 2	11 2	143
		15.625 INCH																
2	6T1	WING		25					2 0.375	9 1.750	3 2.125			4 2.2 50	8 1.625	14 4	14 3	43
2	6T2	WING		25					2 0.375	9 5.250	3 4.000			4 8.7 50	8 2.000	14 10	14 9	44
22	5U1	BEAM		50							2 5.500			2 10.3 75	8.625	5 4	3 3	75
12	4U2	BEAM		51							5.500			2 10.3 75	8.625	3 2	3 3	26
28	5U3	DIAPH.		10	S					3 1.000	2 6.250					8 8	8 6	248
42	6U4	DIAPH.		19	S				3 1.000	4 2.000						7 3	7 1	447
4	5U5	DIAPH.		13	S				2 6.250	3 1.000	2 6.250	3 1.000				12 2	11 10	49
19	5U6	DIAPH.		10	S					3 1.000	2 6.250					8 8	8 6	168
25	6U7	DIAPH.		19	S				3 1.000	4 2.000						7 3	7 1	266
48	4U8	CORBEL		10	S					17.500	6.000					3 5	3 3	105
10	5U9	BEAM		50							2 5.500			2 10.3 75	8.625	5 4	3 3	34
6	5U10	BEAM		50							2 10.500			2 10.3 75	8.625	5 9	3 3	20
4	4U11	BEAM		51							4.000			2 10.3 75	8.625	3 2	3 3	9
1	5U12	BEAM		52							4.000			2 10.3 75	8.625	3 2	2 6	3
1	4U13	BEAM		51							10.500			2 10.3 75	8.625	3 9	3 3	2
6	5V1	BEAM		20					5 4.000							5 4	5 4	33
6	5V2	BEAM		23	S				2 11.500	2 5.500				8.6 25	2 10.375	5 5	5 5	34
16	6V3	WING		20			V	2	2 4.000							2 4	2 4	
		INCREMENT =							6 2.000							6 2	6 2	102
		6.625 INCH																
4	6V4	WING		20					6 7.000							6 7	6 7	40
3	5V5	BEAM		20					5 4.000							5 4	5 4	17
3	5V6	BEAM		23	S				2 11.500	2 5.500				8.6 25	2 10.375	5 5	5 5	17
1	5V7	BEAM		20					5 9.000							5 9	5 9	6
1	5V8			23	S				2 11.500	2 10.500				8.6 25	2 10.375	5 10	5 10	6
16	6V9	WING		20			V	2	2 5.000							2 5	2 5	
		INCREMENT =							6 8.000							6 8	6 8	109
		7.250 INCH																
4	6V10	WING		20					7 1.000							7 1	7 1	43
		END BT.NO.6																

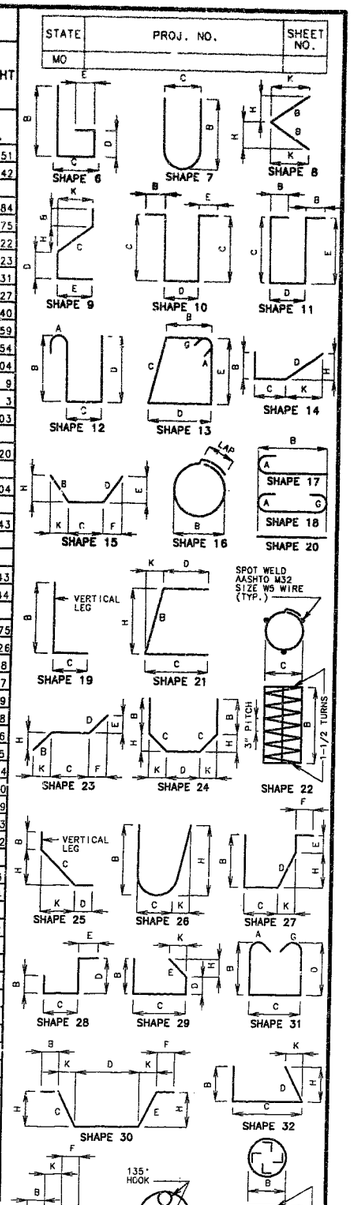

BENDING DIAGRAMS

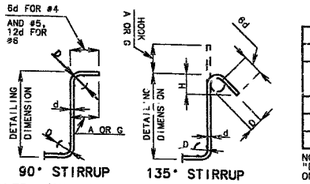

STIRRUP HOOK DIMENSIONS				
GRADES 40 - 50 - 60 KSI				
BAR SIZE	D (IN.)	90° HOOK	135° HOOK	
		HOOK A OR G	HOOK A OR G	APPROX. H
#4	2"	4-1/2"	4-1/2"	3"
#5	2-1/2"	6"	5-1/2"	3-3/4"
#6	4-1/2"	12"	8"	4-1/2"

NOTE: UNLESS OTHERWISE NOTED DIAMETER "D" IS THE SAME FOR ALL BENDS AND HOOKS ON A BAR.

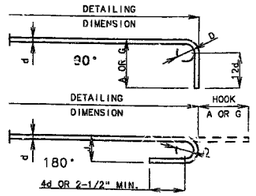

NOTE: THIS DRAWING IS NOT TO SCALE. FOLLOW DIMENSIONS.

END HOOK DIMENSIONS				
		ALL GRADES		
BAR SIZE	D (IN.)	180° HOOKS		90° HOOKS
		A OR G	J	A OR G
#3	2-1/4"	5"	3"	6"
#4	3"	6"	4"	8"
#5	3-3/4"	7"	5"	10"
#6	4-1/2"	8"	6"	12"
#7	5-1/4"	10"	7"	14"
#8	6"	11"	8"	16"
#9	9-1/2"	15"	11-3/4"	19"
#10	10-3/4"	17"	13-1/4"	22"
#11	12"	19"	14-3/4"	2'-0"
#14	18-1/4"	2'-3"	21-3/4"	2'-7"

NOTE:
ALL STANDARD HOOKS AND BENDS OTHER THAN 180 DEG. TO BE BENT WITH THE SAME PROCEDURE AS FOR 90 DEG. STD. HOOKS.
HOOKS AND BENDS SHALL BE IN ACCORDANCE WITH THE PROCEDURES AS SHOWN ON THIS SHEET.
E = EPOXY COATED REINFORCEMENT.
S = STIRRUP.
X = BAR IS INCLUDED IN SUBSTRUCTURE QUANTITIES.
V = BAR DIMENSIONS VARY IN EQUAL INCREMENTS BETWEEN DIMENSIONS SHOWN ON THIS LINE AND THE FOLLOWING LINE.
NO. EA. = NUMBER OF BARS OF EACH LENGTH.
NOMINAL LENGTHS ARE BASED ON OUT TO OUT DIMENSIONS SHOWN IN BENDING DIAGRAMS AND ARE LISTED FOR FABRICATORS USE. (NEAREST INCH)
ACTUAL LENGTHS ARE MEASURED ALONG CENTERLINE BAR TO THE NEAREST INCH.
PAYWEIGHTS ARE BASED ON ACTUAL LENGTHS.
FOUR ANGLE OR CHANNEL SPACERS ARE REQUIRED FOR EACH COLUMN SPIRAL. SPACERS ARE TO BE PLACED ON INSIDE OF SPIRALS. LENGTH AND WEIGHT OF COLUMN SPIRALS DO NOT INCLUDE SPLICES OR SPACERS.
REINFORCING STEEL (GRADE 60) = FY 60,000 PSI.

3 VOIDED SHEET. REPLACED BY SHEET NO. 51a OF 63.

STD 90.8	REVISED
MAY 1974	OCT. 1991

DETAILED JULY 1993
CHECKED JULY 1993

SHEET NO. 51 OF 63.

JACKSON COUNTY

A-1427R1

STATE	PROJ. NO.	SHEET NO.
MO		

BILL OF REINFORCING STEEL

NO. REQ'D.	MARK NO. (SIZE MARK)	LOCATION	EPOXY (E)	SHAPE NO.	STIRRUP (S)	SUBSTR. (X)	VARIES (V)	NO. EACH	B FT. IN.	C FT. IN.	D FT. IN.	E FT. IN.	F FT. IN.	H FT. IN.	K FT. IN.	NOMINAL LENGTH FT. IN.	ACTUAL LENGTH FT. IN.	WEIGHT LBS.
13	9V44	COLUMN		20		X			17 9.000							17 9	17 9	785
13	9V45	COLUMN		20		X			15 4.000							15 4	15 4	678
57	5V46	COLL.WALL		20		X			12 6.000							12 6	12 6	743
13	9V47	COLUMN		17		X			14 9.000							16 0	16 0	707
14	W5W40	A.B.WELL		22		X			15.000	9.125						23 0	23 0	54
		INT.BT.NO.5																
8	6D50	FOOTINGS		10	S	X				4 3.000	8 0.000					16 6	16 2	194
20	8D51	FOOTINGS		20		X			8 9.000							8 9	8 9	467
20	6D52	FOOTINGS		20		X			7 1.000							7 1	7 1	213
44	9D53	FOOTINGS		17		X			7 8.000							8 11	8 11	1334
4	6H51	BEAM		20		X			15 3.000							15 3	15 3	92
8	8H52	BEAM		18		X			15 3.000							17 1	17 1	365
16	8H53	BEAM		18		X			14 6.000							16 4	16 4	698
8	8H54	BEAM		18		X			6 0.000							7 10	7 10	167
2	6H55	BEAM		20		X			6 9.000							6 9	6 9	20
4	8H56	BEAM		18		X			6 9.000							8 7	8 7	92
2	6H57	BEAM		20		X			14 8.000							14 8	14 8	44
4	8H58	BEAM		18		X			14 8.000							16 6	16 6	176
8	8H59	BEAM		18		X			14 2.000							16 0	16 0	342
10	6H500	COLL.WALL		20		X			14 9.000							14 9	14 9	222
18	5H501	COLL.WALL		20		X			14 9.000							14 9	14 9	277
2	6H502	COLL.WALL		20		X			8 10.000							8 10	8 10	27
11	5H503	COLL.WALL		7		X			3 8.000	2 3.000						8 6	8 6	98
3	6H504	COLL.WALL		20		X			8 6.000							8 6	8 6	38
96	4P50	COLUMNS		16		X			2 3.000							7 11	7 11	508
62	6U50	BEAM		13	S	X			2 5.000	2 9.000	2 5.000	2 9.000				11 8	11 2	1040
8	4U51	BEAM		10	S	X				6.000	2 5.000					3 5	3 3	17
2	6U52	BEAM		10	S	X				22.000	3 2.125					6 10	6 6	20
9	6U53	BEAM		13	S	X			2 5.000	2 9.000	2 5.000	2 9.000				11 8	11 2	151
2	6U54	BEAM		10	S	X				22.000	2 8.250					6 4	6 1	18
4	6U55	BEAM		10	S	X				22.000	2 7.500					6 4	6 0	36
20	6U56	BEAM		13	S	X			2 5.000	3 2.125	2 5.000	3 2.125				12 6	12 1	363
22	9V50	COLUMNS		17		X			26 0.000							27 3	27 3	2038
11	9V51	COLUMN		17		X			26 4.000							27 7	27 7	1032
11	9V52	COLUMN		17		X			16 3.000							17 6	17 6	655
12	5V53	COLL.WALL		20		X			10 9.000							10 9	10 9	135
9	5V54	COLL.WALL		20		X			9 9.000							9 9	9 9	92
11	9V55	COLUMN		20		X			15 0.000							15 0	15 0	561
14	W5W50	A.B.WELL		22		X			15.000	9.125						23 0	23 0	54
		SUPERSTR.																
		END BT.NO.1																
5	6F1	WING BRACE		23					14.000	4 11.750	14.000	9.125	10.625	9.125	10.625	7 4	7 3	54
3	6F2	DIAPH.		21					2 5.875	4 11.000				2 5.625	4.250	7 5	7 2	32

BILL OF REINFORCING STEEL

NO. REQ'D.	MARK NO. (SIZE MARK)	LOCATION	EPOXY (E)	SHAPE NO.	STIRRUP (S)	SUBSTR. (X)	VARIES (V)	NO. EACH	B FT. IN.	C FT. IN.	D FT. IN.	E FT. IN.	F FT. IN.	H FT. IN.	K FT. IN.	NOMINAL LENGTH FT. IN.	ACTUAL LENGTH FT. IN.	WEIGHT LBS.
5	6F3	WING BRACE		23					14.000	4 5.500	14.000	9.125	10.625	9.125	10.625	6 10	6 9	51
4	6F4	DIAPH.		23					2 5.500	4 8.250				2 5.250	4.250	7 2	7 0	42
12	6H1	DIAPH.		20					15 9.000							15 9	15 9	284
12	6H2	DIAPH.		20					15 3.000							15 3	15 3	275
2	4H3	CORBEL		20					16 9.000							16 9	16 9	22
24	6H4	BEAM		20					14 6.000							14 6	14 6	523
6	6H5	DIAPH.		20					14 7.000							14 7	14 7	131
6	6H6	DIAPH.		20					14 1.000							14 1	14 1	127
12	6H7	BEAM		20					13 4.000							13 4	13 4	240
6	6H8	DIAPH.		20					6 6.000							6 6	6 6	59
6	6H9	DIAPH.		20					6 0.000							6 0	6 0	54
12	6H10	BEAM		20					5 9.000							5 9	5 9	104
1	4H11	CORBEL		20					13 8.000							13 8	13 8	9
1	4H12	CORBEL		20					5 0.000							5 0	5 0	3
6	6H13	WING		20					11 5.000							11 5	11 5	103
10	5H14	WING		20			V	2	5 1.000							5 1	5 1	
		INCREMENT =							10 11.000							10 11	10 11	120
		17.500 INCH																
6	6H15	WING		20					11 7.000							11 7	11 7	104
12	6H16	WING		20			V	2	4 8.000							4 8	4 8	
		INCREMENT =							11 2.000							11 2	11 2	143
		15.625 INCH																
2	6T1	WING		25					2 0.375	9 1.750	3 2.125			4 2.250	8 1.625	14 4	14 3	43
2	6T2	WING		25					2 0.375	9 5.250	3 4.000			4 8.750	8 2.000	14 10	14 9	44
22	5U1	BEAM		50	S				5 3.000	3 2.500	2 4.500	2 11.500		2 10.375	8.625	13 10	13 7	312
12	4U2	BEAM		51	S				3 1.500	3 2.500	3.250	2 11.500		2 10.375	8.625	12 1	12 11	103
28	5U3	DIAPH.		10	S					3 1.000	2 6.250					8 8	8 6	248
42	6U4	DIAPH.		19	S				3 1.000	4 2.000						7 3	7 1	437
4	5U5	DIAPH.		13	S				2 6.250	3 1.000	2 6.250	3 1.000				12 2	11 10	49
19	5U6	DIAPH.		10	S					3 1.000	2 6.250					8 8	8 6	168
25	6U7	DIAPH.		19	S				3 1.000	4 2.000						7 3	7 1	266
48	4U8	CORBEL		10	S					7.500	6.000					3 5	3 3	105
10	5U9	BEAM		50	S				5 2.875	3 2.500	2 4.375	2 11.500		2 10.375	8.625	13 10	13 7	142
6	5U10	BEAM		50	S				5 7.875	3 2.500	2 5.625	3 3.250		3 2.500	8.625	14 7	14 5	90
4	4U11	BEAM		51	S				3 2.375	3 2.500	3.875	2 11.500		2 10.375	8.625	12 2	12 8	34
1	5U12	BEAM		52	S				3 8.875	2 6.000	10.375	3 3.250		3 2.500	8.625	10 1	9 10	10
1	4U13	BEAM		51	S				3 2.375	3 2.500	3.875	2 11.500		2 10.375	8.625	12 2	12 8	8
6	5V1	BEAM		20					5 4.000							5 4	5 4	33
6	5V2	BEAM		23	S				2 11.500	2 5.500				8.625	2 10.375	5 5	5 5	34
16	6V3	WING		20			V	2	2 4.000							2 4	2 4	
		INCREMENT =							6 2.000							6 2	6 2	102
		6.625 INCH																
4	6V4	WING		20					6 7.000							6 7	6 7	40
3	5V5	BEAM		20					5 4.000							5 4	5 4	17
3	5V6	BEAM		23	S				2 11.500	2 5.500				8.625	2 10.375	5 5	5 5	17
1	5V7	BEAM		20					5 9.000							5 9	5 9	6
1	5V8			23	S				2 11.500	2 10.500				8.625	2 10.375	5 10	5 10	6
16	6V9	WING		20			V	2	2 5.000							2 5	2 5	
		INCREMENT =							6 8.000							6 8	6 8	109
		7.250 INCH																
4	6V10	WING		20					7 1.000							7 1	7 1	43
		END BT.NO.6																

STATE	PROJ. NO.	SHEET NO.
MO.		

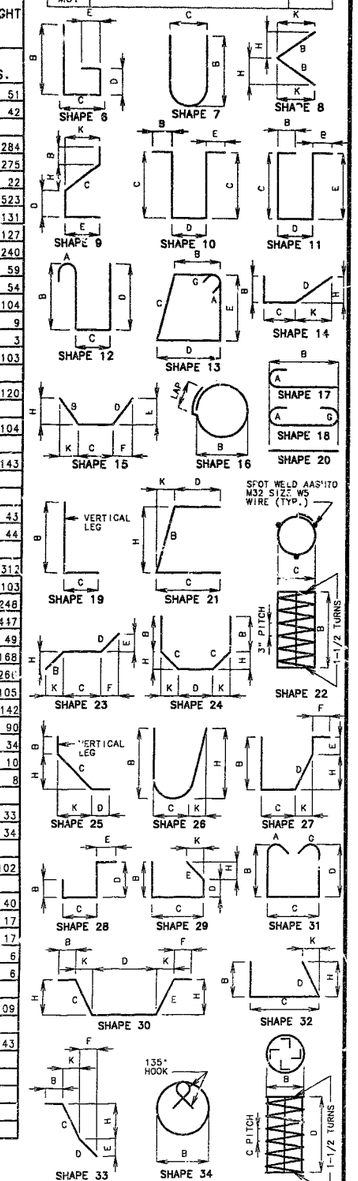

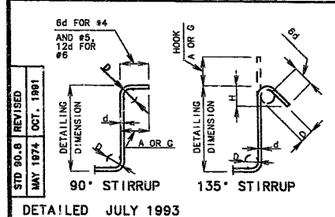

STIRRUP HOOK DIMENSIONS				
GRADES 40 – 50 – 60 KSI				
BAR SIZE	D (IN.)	90° HOOK	135° HOOK	
		HOOK A OR G	HOOK A OR G	APPROX. H
#4	2"	4–1/2"	4–1/2"	3"
#5	2–1/2"	6"	5–1/2"	3–3/4"
#6	4–1/2"	12"	8"	4–1/2"

NOTE: UNLESS OTHERWISE NOTED DIAMETER "D" IS THE SAME FOR ALL BENDS AND HOOKS ON A BAR.

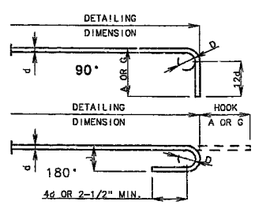

END HOOK DIMENSIONS				
BAR SIZE	D (IN.)	ALL GRADES		
		180° HOOKS	90° HOOKS	
		A OR G	J	A OR G
#3	2–1/4"	5"	3"	6"
#4	3"	6"	4"	8"
#5	3–3/4"	7"	5"	10"
#6	4–1/2"	8"	6"	12"
#7	5–1/4"	10"	7"	14"
#8	6"	11"	8"	16"
#9	9–1/2"	15"	11–3/4"	19"
#10	10–3/4"	17"	13–1/4"	22"
#11	12"	19"	14–3/4"	2'–0"
#14	18–1/4"	2'–3"	21–3/4"	2'–7"

NOTE:
ALL STANDARD HOOKS AND BENDS OTHER THAN 180 DEG. TO BE BENT WITH THE SAME PROCEDURE AS FOR 90 DEG. STD. HOOKS.
HOOKS AND BENDS SHALL BE IN ACCORDANCE WITH THE PROCEDURES AS SHOWN ON THIS SHEET.
E = EPOXY COATED REINFORCEMENT.
S = STIRRUP.
X = BAR IS INCLUDED IN SUBSTRUCTURE QUANTITIES.
V = BAR DIMENSIONS VARY IN EQUAL INCREMENTS BETWEEN DIMENSIONS SHOWN ON THIS LINE AND THE FOLLOWING LINE.
NO. EA. = NUMBER OF BARS OF EACH LENGTH.
NOMINAL LENGTHS ARE BASED ON OUT TO OUT DIMENSIONS SHOWN IN BENDING DIAGRAMS AND ARE LISTED FOR FABRICATORS USE. (NEAREST INCH)
ACTUAL LENGTHS ARE MEASURED ALONG CENTERLINE BAR TO THE NEAREST INCH.
PAYWEIGHTS ARE BASED ON ACTUAL LENGTHS.
FOUR ANGLE OR CHANNEL SPACERS ARE REQUIRED FOR EACH COLUMN SPIRAL. SPACERS ARE TO BE PLACED ON INSIDE OF SPIRALS. LENGTH AND WEIGHT OF COLUMN SPIRALS DO NOT INCLUDE SPLICES OR SPACERS.
REINFORCING STEEL (GRADE 60) = FY 60,000 PSI.

3 REVISED: JUNE 28,1994
REPLACES SHEET NO. 51 OF 63.

STD 90.8 | REVISED
MAY 1974 | OCT. 1991

DETAILED JULY 1993
CHECKED JULY 1993

NOTE: THIS DRAWING IS NOT TO SCALE. FOLLOW DIMENSIONS.

SHEET NO. 51a OF 63.

JACKSON COUNTY

A-1427R1

345

BILL OF REINFORCING STEEL

NO. REQ'D.	MARK NO. / SIZE / MARK	LOCATION	EPOXY (E)	SHAPE NO.	STIRRUP (S)	SUBSTR. (X)	VARIES (V)	NO. EACH	B FT. IN.	C FT. IN.	D FT. IN.	E FT. IN.	F FT. IN.	H FT. IN.	K FT. IN.	NOMINAL LENGTH FT. IN.	ACTUAL LENGTH FT. IN.	WEIGHT LBS.
16	6F61	WING BRACE		23					14.000	4 9.250	14.000	9.875	9.875	9.875	9.875	7 1	7 0	168
9	6F62	DIAPH.		19					1 9.000	2 5.250						7 2	7 0	95
20	6H60	WING WALL		20					12 6.000							12 6	12 6	376
12	6H61	DIAPH.		20					15 1.000							15 1	15 1	272
12	6H62	DIAPH.		20					15 7.000							15 7	15 7	281
2	4H63	CORBEL		20					15 4.000							15 4	15 4	20
24	6H64	BEAM		20					14 4.000							14 4	14 4	517
6	6H65	DIAPH.		20					6 6.000							6 6	6 6	59
6	6H66	DIAPH.		20					6 0.000							6 0	6 0	54
12	6H67	BEAM		20					5 9.000							5 9	5 9	104
6	6H68	DIAPH.		20					14 6.000							14 6	14 6	131
6	6H69	DIAPH.		20					14 0.000							14 0	14 0	126
12	6H70	BEAM		20					13 3.000							13 3	13 3	239
6	6H71	WING		20					11 5.000							11 5	11 5	103
28	6H72	WING		20			V	2	3 11.000							3 11	3 11	
		INCREMENT = 6.625 INCH							11 1.000							11 1	11 1	315
6	6H73	WING		20					11 5.000							11 5	11 5	103
2	6T60	WING		25					2 0.375	9 8.125	3 1.750			5 1.375	8 2.250	14 10	14 9	44
2	6T61	WING		25					2 0.375	9 7.500	3 1.875			5 1.000	8 2.125	14 10	14 9	44
22	5U60	BEAM		50							2 7.250			2 10.375	8.625	5 6	3 3	75
30	5U61	DIAPH.		10	S					3 1.000	2 6.000					8 8	8 6	266
8	4U62	BEAM		51							4.625			2 10.375	8.625	3 3	3 3	17
43	4U63	CORBEL		10	S					17.500	6.000					3 5	3 3	94
40	6U64	DIAPH.		19	S				3 1.000	4 2.000						7 3	7 1	426
2	5U65	DIAPH.		13	S				2 6.000	3 1.000	2 6.000	3 1.000				12 1	11 9	25
4	4U66	BEAM		51							8.625			2 10.375	8.625	3 7	3 3	9
17	5U67	BEAM		50							2 8.625			2 10.375	8.625	5 8	3 3	58
5	5U68	DIAPH.		10	S					3 1.000	2 6.000					8 8	8 6	44
2	5U69	DIAPH.		13	S				2 6.000	3 11.000	2 6.000	3 11.000				13 9	13 5	28
18	5U70	DIAPH.		10	S					3 1.000	2 6.000					8 8	8 6	160
26	6U71	DIAPH.		19	S				3 1.000	3 10.000						6 11	6 9	264
8	5V60	BEAM		20					5 6.000							5 6	5 6	46
8	5V61	BEAM		23	S				2 11.500	2 7.250				8.625	2 10.375	5 7	5 7	47
24	6V62	WING WALL		20					6 9.000							6 9	6 9	243
16	6V63	WING		20			V	2	2 5.000							2 5	2 5	
		INCREMENT = 7.250 INCH							6 8.000							6 8	6 8	109
4	6V64	WING		20					7 1.000							7 1	7 1	43
16	6V65	WING		20			V	2	2 5.000							2 5	2 5	
		INCREMENT = 7.125 INCH							6 7.000							6 7	6 7	108
4	6V66	WING		20					7 0.000							7 0	7 0	42
2	5V67	BEAM		20					5 9.000							5 9	5 9	12
2	5V68	BEAM		23	S				2 11.500	2 10.625				8.625	2 10.375	5 10	5 10	12
3	5V69	BEAM		20					5 7.000							5 7	5 7	17
3	5V70	BEAM		23	S				2 11.500	2 8.625				8.625	2 10.375	5 8	5 8	18
290	5S1	SLAB		20					60 0.000							60 0	60 0	1 8148
14	5S2	SLAB		20			V	1	10 2.000							10 2	10 2	
		INCREMENT = 2.125 INCH							12 5.000							12 5	12 5	165

BILL OF REINFORCING STEEL

NO. REQ'D.	MARK NO. / SIZE / MARK	LOCATION	EPOXY (E)	SHAPE NO.	STIRRUP (S)	SUBSTR. (X)	VARIES (V)	NO. EACH	B FT. IN.	C FT. IN.	D FT. IN.	E FT. IN.	F FT. IN.	H FT. IN.	K FT. IN.	NOMINAL LENGTH FT. IN.	ACTUAL LENGTH FT. IN.	WEIGHT LBS.
14	5S3	SLAB		20			V	1	23 7.000							23 7	23 7	
		INCREMENT = 2.000 INCH							25 9.000							25 9	25 9	360
2023	5S4	SLAB		20					15 7.000							15 7	15 7	3 2881
48	6S5	SLAB		20					34 0.000							34 0	34 0	2451
48	6S6	SLAB		20					34 8.000							34 8	34 8	2499
24	6S7	SLAB		20					34 10.000							34 10	34 10	1256
24	6S8	SLAB		20					34 4.000							34 4	34 4	1238
24	6S9	SLAB		20					28 0.000							28 0	28 0	1009
24	6S10	SLAB		20					33 8.000							33 8	33 8	1214
1	5S11	SLAB		20			V	1	4 6.000							4 6	4 6	
		INCREMENT = 42.000 INCH							15 0.000							15 0	15 0	41
4	5S12	SLAB		20			V	1	3 10.000							3 10	3 10	
		INCREMENT = 41.625 INCH							14 3.000							14 3	14 3	38
3	5S13	SLAB		20			V	1	2 0.000							2 0	2 0	
		INCREMENT = 62.000 INCH							12 4.000							12 4	12 4	22
1	5S14	SLAB		20					11 0.000							11 0	11 0	11
1	5S15	SLAB		20					11 0.000							11 0	11 0	11
15	5S16	SLAB		20			V	1	9 9.000							9 9	9 9	
		INCREMENT = 1.875 INCH							12 0.000							12 0	12 0	170
15	5S17	SLAB		20			V	1	23 2.000							23 2	23 2	
		INCREMENT = 1.875 INCH							25 4.000							25 4	25 4	379
205	5S21	SLAB		20					60 0.000							60 0	60 0	1 2829
6	5S22	SLAB		20			V	2	2 11.000							2 11	2 11	
		INCREMENT = 5.500 INCH							3 10.000							3 10	3 10	21
28	5S23	SLAB		20			V	2	25 5.000							25 5	25 5	
		INCREMENT = 1.875 INCH							27 6.000							27 6	27 6	773
965	5S24	SLAB		20					6 6.000							6 6	6 6	6542
32	6S25	SLAB		20					34 0.000							34 0	34 0	1634
32	6S26	SLAB		20					34 8.000							34 8	34 8	1666
10	6S27	SLAB		20					34 10.000							34 10	34 10	523
22	6S28	SLAB		20					34 4.000							34 4	34 4	1135
10	6S29	SLAB		20					27 2.000							27 2	27 2	408
22	6S30	SLAB		20					34 4.000							34 4	34 4	1135
1063	5S31	SLAB		20					14 6.000							14 6	14 6	1 6076
2	5S32	SLAB		20					4 6.000							4 6	4 6	9
3	5S33	SLAB		20			V	1	4 3.000							3	4 3	
		INCREMENT = 41.500 INCH							11 2.000							11 2	11 2	24
1	5S34	SLAB		20					12 3.000							12 3	12 3	13
1	5S35	SLAB		20					7 0.000							7 0	7 0	7
7	5S36	SLAB		20			V	1	2 11.000							2 11	2 11	
		INCREMENT = 1.875 INCH							3 10.000							3 10	3 10	25
1399	5R1	BARRIER CURB		19	S				2 7.500	3.500						2 11	2 10	4134
1343	5R2	BARRIER CURB		15	S				2 7.625	3.500				2 7.500	3.000	2 11	2 10	3969
1270	5R3	BARRIER CURB		19	S				18.500	6.000						2 1	23	2539
1270	5R4	BARRIER CURB		27	S					6.000	11.125	8.500	12.000	9.125	6.375	3 2	3 0	3974
73	5R5	BARRIER CURB		27	S					6.000	11.125	23.750	23.500	9.125	6.375	5 4	5 2	393

STATE	PROJ. NO.	SHEET NO.
MO.		

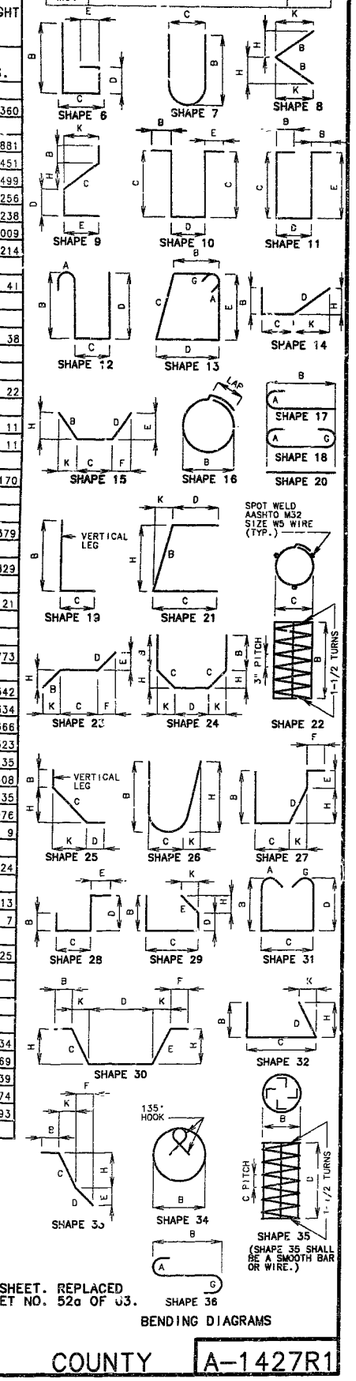

BENDING DIAGRAMS

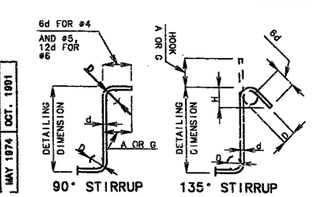

STD 90.8	REVISED
MAY 1974	OCT. 1991

DETAILED JULY 1993
CHECKED JULY 1993

STIRRUP HOOK DIMENSIONS

BAR SIZE	D (IN.)	GRADES 40 – 50 – 60 KSI: 90° HOOK A OR G	135° HOOK A OR G	135° HOOK APPROX. H
#4	2"	4-1/2"	4-1/2"	3"
#5	2-1/2"	6"	5-1/2"	3-3/4"
#6	4-1/2"	12"	8"	4-1/2"

NOTE: UNLESS OTHERWISE NOTED DIAMETER "D" IS THE SAME FOR ALL BENDS AND HOOKS ON A BAR.

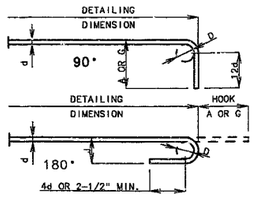

NOTE: THIS DRAWING IS NOT TO SCALE. FOLLOW DIMENSIONS.

END HOOK DIMENSIONS

BAR SIZE	D (IN.)	ALL GRADES: 180° HOOKS A OR G	180° HOOKS J	90° HOOKS A OR G
#3	2-1/4"	5"	3"	6"
#4	3"	6"	4"	8"
#5	3-3/4"	7"	5"	10"
#6	4-1/2"	8"	6"	12"
#7	5-1/4"	10"	7"	14"
#8	6"	11"	8"	16"
#9	9-1/2"	15"	11-3/4"	19"
#10	10-3/4"	17"	13-1/4"	22"
#11	12"	19"	14-3/4"	2'-0"
#14	18-1/4"	2'-3"	21-3/4"	2'-7"

NOTE:
ALL STANDARD HOOKS AND BENDS OTHER THAN 180 DEG. TO BE BENT WITH THE SAME PROCEDURE AS FOR 90 DEG. STD. HOOKS.
HOOKS AND BENDS SHALL BE IN ACCORDANCE WITH THE PROCEDURES AS SHOWN ON THIS SHEET.
E = EPOXY COATED REINFORCEMENT.
S = STIRRUP
X = BAR IS INCLUDED IN SUBSTRUCTURE QUANTITIES.
V = BAR DIMENSIONS VARY IN EQUAL INCREMENTS BETWEEN DIMENSIONS SHOWN ON THIS LINE AND THE FOLLOWING LINE.
NO. EA. = NUMBER OF BARS OF EACH LENGTH.
NOMINAL LENGTHS ARE BASED ON OUT TO OUT DIMENSIONS SHOWN IN BENDING DIAGRAMS AND ARE LISTED FOR FABRICATORS USE. (NEAREST INCH)
ACTUAL LENGTHS ARE MEASURED ALONG CENTERLINE BAR TO THE NEAREST INCH.
PAYWEIGHTS ARE BASED ON ACTUAL LENGTHS.
FOUR ANGLE OR CHANNEL SPACERS ARE REQUIRED FOR EACH COLUMN SPIRAL. SPACERS ARE TO BE PLACED ON INSIDE OF SPIRALS. LENGTH AND WEIGHT OF COLUMN SPIRALS DO NOT INCLUDE SPLICES OR SPACERS.
REINFORCING STEEL (GRADE 60) = FY 60,000 PSI.

3 VOIDED SHEET. REPLACED BY SHEET NO. 52a OF 63.

SHEET NO. 52 OF 63.

JACKSON COUNTY A-1427R1

BILL OF REINFORCING STEEL

NO. REQ'D.	MARK NO. (SIZE MARK)	LOCATION	EPOXY (E)	SHAPE NO.	STIRRUP (S)	SUBSTR. (X)	VARIES (V)	NO. EACH	B FT. IN.	C FT. IN.	D FT. IN.	E FT. IN.	F FT. IN.	H FT. IN.	K FT. IN.	NOMINAL LENGTH FT. IN.	ACTUAL LENGTH FT. IN.	WEIGHT LBS.
16	6F61	WING BRACE		23					14.000	4 9.250	14 .000	9.875	9.875	9.8 75	9.875	7 1	7 0	168
9	6F62	DIAPH.		19					4 9.000	2 5.250						7 2	7 0	95
20	6H60	WING WALL		20					12 6.000							12 6	12 6	376
12	6H61	DIAPH.		20					15 1.000							15 1	15 1	272
12	6H62	DIAPH.		20					15 7.000							15 7	15 7	281
2	4H63	CORBEL		20					15 4.000							15 4	15 4	20
24	6H64	BEAM		20					14 4.000							14 4	14 4	5[illegible]7
6	6H65	DIAPH.		20					6 6.000							6 6	6 6	59
6	6H66	DIAPH.		20					6 0.000							6 0	6 0	54
12	6H67	BEAM		20					5 9.000							5 9	5 9	104
6	6H68	DIAPH.		20					14 6.000							14 6	14 6	131
6	6H69	DIAPH.		20					14 0.000							14 0	14 0	126
12	6H70	BEAM		20					13 3.000							13 3	13 3	239
6	6H71	WING		20					11 5.000							11 5	11 5	103
28	6H72	WING		20			V	2	3 11.000							3 11	3 11	
		INCREMENT =							11 1.000							11 1	11 1	315
		6.625 INCH																
6	6H73	WING		20					11 5.000							11 5	11 5	103
2	6T60	WING		25					2 0.375	9 8.125	3 1.750			5 1.8 75	8 2.250	14 10	14 9	44
2	6T61	WING		25					2 0.375	9 7.500	3 1.875			5 1.0 00	8 2.125	14 10	14 9	44
22	5U60	BEAM		50	S				5 2.500	3 2.500	2 4.000	2 11.500		2 10.3 75	8.625	13 9	13 6	310
30	5U61	DIAPH.		10	S					3 1.000	2 6.000					8 8	8 6	266
8	4U62	BEAM		51	S				3 3.000	3 2.500	4.500	2 11.500		2 10.3 75	8.625	12 4	12 11	69
43	4U63	CORBEL		10	S					17.500	6.000					3 5	3 3	94
40	6U64	DIAPH.		19	S				3 1.000	4 2.000						7 3	7 1	426
2	5U65	DIAPH.		13	S				2 6.000	3 1.000	2 6.000	3 1.000				12 1	11 9	25
4	4U66	BEAM		51	S				3 7.000	3 2.500	8.500	2 11.500		2 10.3 75	8.625	13 0	13 7	36
17	5U67	BEAM		50	S				5 7.625	3 2.500	2 9.125	2 11.500		2 10.3 75	8.625	14 7	14 4	254
5	5U68	DIAPH.		10	S					3 1.000	2 6.000					8 8	8 6	44
2	5U69	DIAPH.		13	S				2 6.000	3 11.000	2 6.000	3 11.000				13 9	13 5	28
18	5U70	DIAPH.		10	S					3 1.000	2 6.000					8 8	8 6	160
25	6U71	DIAPH.		19	S				3 1.000	3 10.000						6 11	6 9	264
8	5V60	BEAM		20					5 6.000							5 6	5 6	46
8	5V61	BEAM		23	S				2 11.500	2 7.250				8.6 25	2 10.375	5 7	5 7	47
24	6V62	WING WALL		20					6 9.000							6 9	6 9	243
16	6V63	WING		20			V	2	2 5.000							2 5	2 5	
		INCREMENT =							6 8.000							6 8	6 8	109
		7.250 INCH																
4	6V64	WING		20					7 1.000							7 1	7 1	43
16	6V65	WING		20			V	2	2 5.000							2 5	2 5	
		INCREMENT =							6 7.000							6 7	6 7	108
		7.125 INCH																
4	6V66	WING		20					7 0.000							7 0	7 0	42
2	5V67	BEAM		20					5 9.000							5 9	5 9	12
2	5V68	BEAM		23	S				2 11.500	2 10.625				8.6 25	2 10.375	5 10	5 10	12
3	5V69	BEAM		20					5 7.000							5 7	5 7	17
3	5V70	BEAM		23	S				2 11.500	2 8.625				8.6 25	2 10.375	5 8	5 8	18
290	5S1	SLAB		20					60 0.000							60	60 0	1,8148
14	5S2	SLAB		20			V	1	10 2.000							10 2	10 2	
		INCREMENT =							12 5.000							12 5	12 5	165
		2.125 INCH																

BILL OF REINFORCING STEEL

NO. REQ'D.	MARK NO. (SIZE MARK)	LOCATION	EPOXY (E)	SHAPE NO.	STIRRUP (S)	SUBSTR. (X)	VARIES (V)	NO. EACH	B FT. IN.	C FT. IN.	D FT. IN.	E FT. IN.	F FT. IN.	H FT. IN.	K FT. IN.	NOMINAL LENGTH FT. IN.	ACTUAL LENGTH FT. IN.	WEIGHT LBS.
14	5S3	SLAB		20			V	1	23 7.000							23 7	23 7	
		INCREMENT =							25 9.000							25 9	25 9	360
		2.000 INCH																
2023	5S4	SLAB		20					15 7.000							15 7	15 7	3 2881
48	6S5	SLAB		20					34 0.000							34 0	34 0	2451
48	6S6	SLAB		20					34 8.000							34 8	34 8	2499
24	6S7	SLAB		20					34 10.000							34 10	34 10	1256
24	6S8	SLAB		20					34 4.000							34 4	34 4	1238
24	6S9	SLAB		20					28 0.000							28 0	28 0	1009
24	6S10	SLAB		20					33 8.000							33 8	33 8	1214
4	5S11	SLAB		20			V	1	4 6.000							4 6	4 6	
		INCREMENT =							15 0.000							15 0	15 0	41
		42.000 INCH																
4	5S12	SLAB		20			V	1	3 10.000							3 10	3 10	
		INCREMENT =							14 3.000							14 3	14 3	38
		41.625 INCH																
3	5S13	SLAB		20			V	1	2 0.000							2 0	2 0	
		INCREMENT =							12 4.000							12 4	12 4	22
		62.000 INCH																
1	5S14	SLAB		20					11 0.000							11 0	11 0	11
1	5S15	SLAB		20					11 0.000							11 0	11 0	11
15	5S16	SLAB		20			V	1	9 9.000							9 9	9 9	
		INCREMENT =							12 0.000							12 0	12 0	170
		1.575 INCH																
15	5S17	SLAB		20			V	1	23 2.000							23 2	23 2	
		INCREMENT =							25 4.000							25 4	25 4	379
		1.575 INCH																
205	5S21	SLAB		20					60 0.000							60 0	60 0	1 2829
6	5S22	SLAB		20			V	2	2 11.000							2 11	2 11	
		INCREMENT =							3 10.000							3 10	3 10	21
		5.500 INCH																
28	5S23	SLAB		20			V	2	25 5.000							25 5	25 5	
		INCREMENT =							27 6.000							27 6	27 6	773
		1.875 INCH																
965	5S24	SLAB		20					6 6.000							6 6	6 6	6542
32	6S25	SLAB		20					34 0.000							34 0	34 0	1634
32	6S26	SLAB		20					34 8.000							34 8	34 8	1666
10	6S27	SLAB		20					34 10.000							34 10	34 10	523
22	6S28	SLAB		20					34 4.000							34 4	34 4	1135
10	6S29	SLAB		20					27 2.000							27 2	27 2	[illegible]
22	6S30	SLAB		20					34 4.000							34 4	34 4	1135
1063	5S31	SLAB		20					14 6.000							14 6	14 6	1 6076
2	5S32	SLAB		20					4 6.000							4 6	4 6	9
3	5S33	SLAB		20			V	1	4 3.000							4 3	4 3	
		INCREMENT =							11 2.000							11 2	11 2	24
		41.500 INCH																
1	5S34	SLAB		20					12 3.000							12 3	12 3	13
1	5S35	SLAB		20					7 0.000							7 0	7 0	7
7	5S36	SLAB		20			V	1	2 11.000							2 11	2 11	
		INCREMENT =							3 10.000							3 10	3 10	25
		1.875 INCH																
1399	[illegible]	BARRIER CURB		19	S				2 7.500	3.500						2 11	2 10	4134
1343	5R2	BARRIER CURB		15	S				2 7.625	3.500					2 7.5 00	3.000	2 11	2 10	3969
1270	5R3	BARRIER CURB		19	S				18.500	6.000							2 1	23	2539
1270	5R4	BARRIER CURB		27	S					6.000	11 .125	8.500	12.000	9.1 25	6.375		3 2	3 0	3974
73	5R5	BARRIER CURB		27	S					6.000	11 .125	23.750	23.500	9.1 25	6.375		5 4	5 2	393

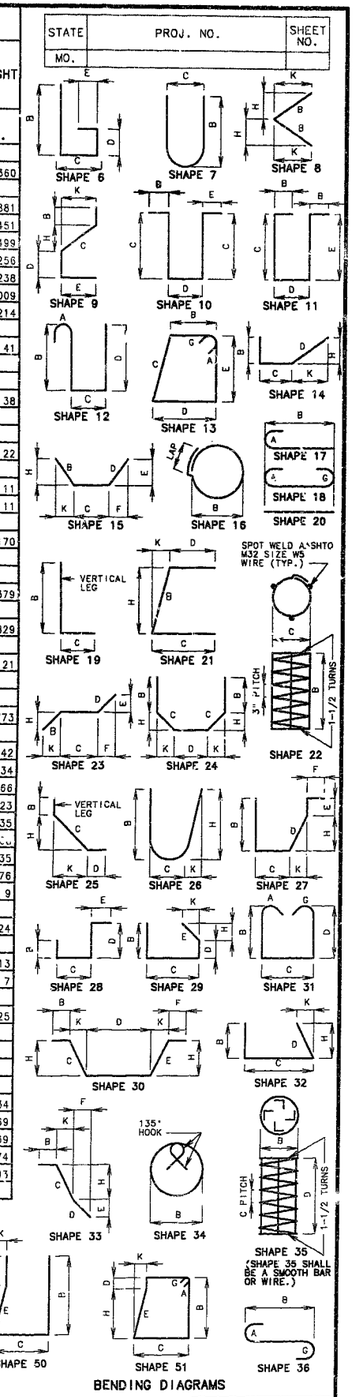

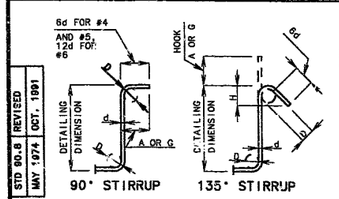

STD 90.8	REVISED
MAY 1974	OCT. 1991

DETAILED JULY 1993
CHECKED JULY 1993

STIRRUP HOOK DIMENSIONS				
GRADES 40 – 50 – 60 KSI				
BAR SIZE	D (IN.)	90° HOOK: HOOK A OR G	135° HOOK: HOOK A OR G	135° HOOK: APPROX. H
#4	2"	4-1/2"	4-1/2"	3"
#5	2-1/2"	6"	5-1/2"	3-3/4"
#6	4-1/2"	12"	9"	4-1/2"

NOTE: UNLESS OTHERWISE NOTED DIAMETER "D" IS THE SAME FOR ALL BENDS AND HOOKS ON A BAR.

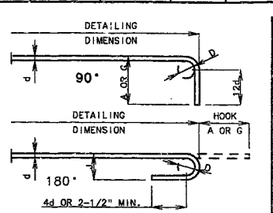

END HOOK DIMENSIONS				
		ALL GRADES		
BAR SIZE	D (IN.)	180° HOOKS: A OR G	180° HOOKS: J	90° HOOKS: A OR G
#3	2-1/4"	5"	3"	6"
#4	3"	6"	4"	8"
#5	3-3/4"	7"	5"	10"
#6	4-1/2"	8"	6"	12"
#7	5-1/4"	10"	7"	14"
#8	6"	11"	8"	16"
#9	9-1/2"	15"	11-3/4"	19"
#10	10-3/4"	17"	13-1/4"	22"
#11	12"	19"	14-3/4"	2'-[illegible]
#14	18-1/4"	2'-3"	21-3/4"	2'-7"

NOTE:
ALL STANDARD HOOKS AND BENDS OTHER THAN 180 DEG. TO BE BENT WITH THE SAME PROCEDURE AS FOR 90 DEG. STD. HOOKS.
HOOKS AND BENDS SHALL BE IN ACCORDANCE WITH THE PROCEDURES AS SHOWN ON THIS SHEET.
E = EPOXY COATED REINFORCEMENT.
S = STIRRUPS.
λ = BAR IS INCLUDED IN SUBSTRUCTURE QUANTITIES.
V = BAR DIMENSIONS VARY IN EQUAL INCREMENTS BETWEEN DIMENSIONS SHOWN ON THIS LINE AND THE FOLLOWING LINE.
NO. EA. = NUMBER OF BARS OF EACH LENGTH.
NOMINAL LENGTHS ARE BASED ON OUT TO OUT DIMENSIONS SHOWN IN BENDING DIAGRAMS AND ARE LISTED FOR FABRICATORS USE. (NEAREST INCH)
ACTUAL LENGTHS ARE MEASURED ALONG CENTERLINE BAR TO THE NEAREST INCH.
PAYWEIGHTS ARE BASED ON ACTUAL LENGTHS.
FOUR ANGLE OR CHANNEL SPACERS ARE REQUIRED FOR EACH COLUMN SPIRAL. SPACERS ARE TO BE PLACED ON INSIDE OF SPIRALS. LENGTH AND WEIGHT OF COLUMN SPIRALS DO NOT INCLUDE SPLICES OR SPACERS.
REINFORCING STEEL (GRADE 60) = FY 60,000 PSI.

3 REVISED: JUNE 28,1994
REPLACES SHEET NO. 52 OF 63.

NOTE: THIS DRAWING IS NOT TO SCALE. FOLLOW DIMENSIONS.

JACKSON COUNTY

A-1427R1

327

STATE	PROJ. NO.	SHEET NO.
MO.		267

BILL OF REINFORCING STEEL

NO. REQ'D.	MARK NO. SIZE MARK	LOCATION	EPOXY (E)	SHAPE NO.	STIRRUP (S)	SUBSTR. (X)	VARIES (V)	NO. EACH	B FT. IN.	C FT. IN.	D FT. IN.	E FT. IN.	F FT. IN.	H FT. IN.	K FT. IN.	NOMINAL LENGTH FT. IN.	ACTUAL LENGTH FT. IN.	WEIGHT LBS.
73	5R6	BARRIER CURB	E	19	S				2 2.250	6.000						2 8	2 7	197
8	5R7	BARRIER CURB	E	19	S				2 2.250	6.000						2 8	2 7	22
8	5R8	BARRIER CURB	E	27	S					6.000	7.875	23.750	23.500	6.250	4.750	5 1	4 11	41
24	5R9	BARRIER CURB	E	10	S					2 2.250	7.000					5 0	4 9	119
8	5R10	BARRIER CURB	E	19	S				2 1.500	3.500						2 5	2 4	19
10	5R11	BARRIER CURB	E	20					11 0.000							11 0	11 0	115
2	5R12	BARRIER CURB	E	20					11 9.000							11 9	11 9	25
48	5R13	BARRIER CURB	E	20					5 0.000							5 0	5 0	250
224 (1) 226	5R14	BARRIER CURB	E	20					9 9.000							9 9	9 9	2298
56	5R15	BARRIER CURB	E	20					26 6.000							26 6	26 6	1548
14	5R16	BARRIER CURB	E	20					32 5.000							32 5	32 5	473
7	5R17	BARRIER CURB	E	20					33 9.000							33 9	33 9	246
14	5R18	BARRIER CURB	E	20					31 5.000							31 5	31 5	459
7	5R19	BARRIER CURB	E	20					37 10.000							37 10	37 10	276
7	5R20	BARRIER CURB	E	20					36 5.000							36 5	36 5	266
56	5R21	BARRIER CURB	E	20					26 7.000							26 7	26 7	1553
14	5R22	BARRIER CURB	E	20					22 3.000							22 3	22 3	325
7	5R23	BARRIER CURB	E	20					34 5.000							34 5	34 5	251
7	5R24	BARRIER CURB	E	20					36 3.000							36 3	36 3	265
14	5R25	BARRIER CURB	E	20					24 0.000							24 0	24 0	350
14	5R26	BARRIER CURB	E	20					22 9.000							22 9	22 9	332
6	5R27	BARRIER CURB	E	20					13 9.000							13 9	13 9	86
10	5R28	BARRIER CURB	E	20					10 0.000							10 0	10 0	104
2	5R29	BARRIER CURB	E	20					10 9.000							10 9	10 9	22
154	5C1	SLIP-FORM CURB OPTION ONLY	E	20					10 0.000							10 0	10 0	1606

(1) DELETE EPOXY COATING

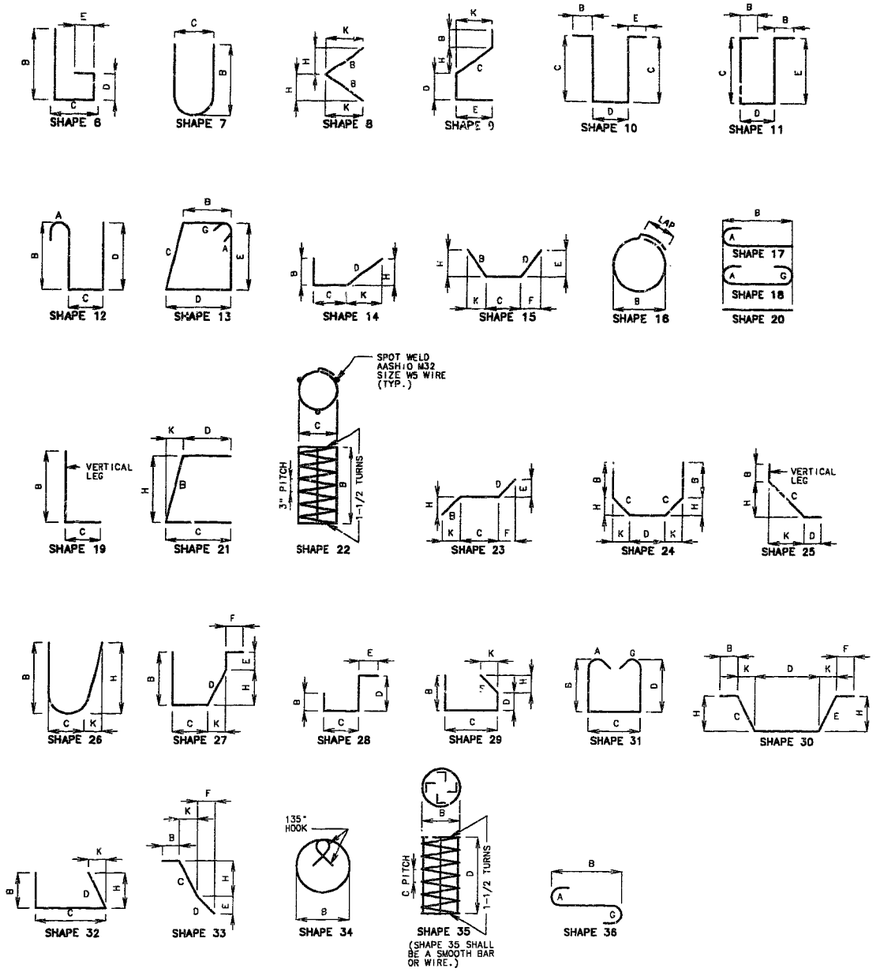

BENDING DIAGRAMS

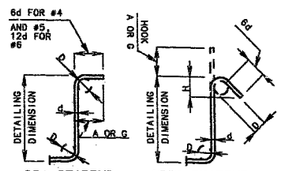

STIRRUP HOOK DIMENSIONS			
GRADES 40 – 50 – 60 KSI			
BAR SIZE	D (IN.)	90° HOOK: HOOK A OR G	135° HOOK: HOOK A OR G	135° HOOK: APPROX. H
#4	2"	4-1/2"	4-1/2"	3"
#5	2-1/2"	6"	5-1/2"	3-3/4"
#6	4-1/2"	12"	8"	4-1/2"

NOTE: UNLESS OTHERWISE NOTED DIAMETER "D" IS THE SAME FOR ALL BENDS AND HOOKS ON A BAR.

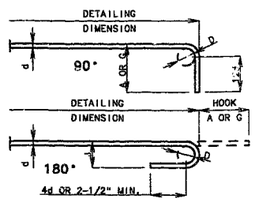

NOTE: THIS DRAWING IS NOT TO SCALE. FOLLOW DIMENSIONS.

TWO ADDITIONAL #5-R14 ARE INCLUDED IN THE BAR BILL FOR TESTING. (1) DELETE

END HOOK DIMENSIONS				
		ALL GRADES		
BAR SIZE	D (IN.)	180° HOOKS: A OR G	180° HOOKS: J	90° HOOKS: A OR G
#3	2-1/4"	5"	3"	6"
#4	3"	6"	4"	8"
#5	3-3/4"	7"	5"	10"
#6	4-1/2"	8"	6"	12"
#7	5-1/4"	10"	7"	14"
#8	6"	11"	8"	16"
#9	9-1/2"	15"	11-3/4"	19"
#10	10-3/4"	17"	13-1/4"	22"
#11	12"	19"	14-3/4"	2'-0"
#14	18-1/4"	2'-3"	21-3/4"	2'-7"

NOTE:
ALL STANDARD HOOKS AND BENDS OTHER THAN 180 DEG. TO BE BENT WITH THE SAME PROCEDURE AS FOR 90 DEG. STD. HOOKS.
HOOKS AND BENDS SHALL BE IN ACCORDANCE WITH THE PROCEDURES AS SHOWN ON THIS SHEET.
E = EPOXY COATED REINFORCEMENT.
S = STIRRUP.
X = BAR IS INCLUDED IN SUBSTRUCTURE QUANTITIES.
V = BAR DIMENSIONS VARY IN EQUAL INCREMENTS BETWEEN DIMENSIONS SHOWN ON THIS LINE AND THE FOLLOWING LINE.
NO. EA. = NUMBER OF BARS OF EACH LENGTH.
NOMINAL LENGTHS ARE BASED ON OUT TO OUT DIMENSIONS SHOWN IN BENDING DIAGRAMS AND ARE LISTED FOR FABRICATORS USE. (NEAREST INCH)
ACTUAL LENGTHS ARE MEASURED ALONG CENTERLINE BAR TO THE NEAREST INCH.
PAYWEIGHTS ARE BASED ON ACTUAL LENGTHS.
FOUR ANGLE OR CHANNEL SPACERS ARE REQUIRED FOR EACH COLUMN SPIRAL. SPACERS ARE TO BE PLACED ON INSIDE OF SPIRALS. LENGTH AND WEIGHT OF COLUMN SPIRALS DO NOT INCLUDE SPLICES OR SPACERS.
REINFORCING STEEL (GRADE 60) = FY 60,000 PSI.

(1) REVISED: MAY 12, 1994

STD 80.8	REVISED
MAY 1974	OCT. 1991

DETAILED JULY 1993
CHECKED JULY 1993

SHEET NO. 53 OF 63.

JACKSON COUNTY A-1427R1

STATE	PROJ. NO.	SHEET NO.
MO.		268

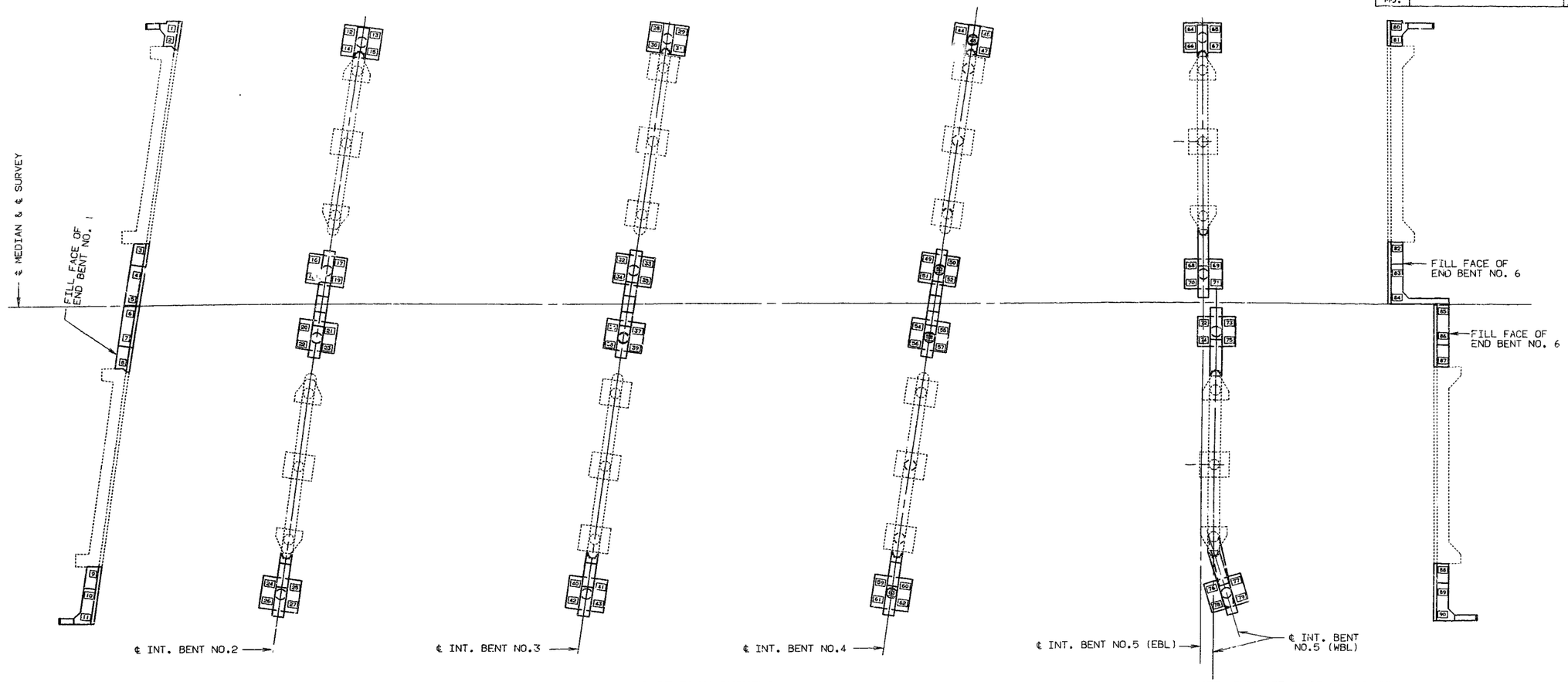

PART PLAN SHOWING PILE NUMBERING FOR RECORDING "AS BUILT" PILE DATA

NOTE: INDICATE IN REMARK COLUMN:
A.) IF PILING WERE DRIVEN TO PRACTICAL REFUSAL.
B.) PILE BATTER IF OTHER THAN SHOWN ON BENT DETAIL SHEET.
C.) TYPE OF PILING USED.

"AS BUILT" PILE DATA

LOCATION	PILE NO.	LENGTH IN PLACE (FT.)	COMPUTED BEARING (TONS)	REMARKS
END BENT NO. 1	1			
	2			
	3			
	4			
	5			
	6			
	7			
	8			
	9			
	10			
	11			
INT.BENT NO. 2	12			

"AS BUILT" PILE DATA

LOCATION	PILE NO.	LENGTH IN PLACE (FT.)	COMPUTED BEARING (TONS)	REMARKS
	13			
	14			
	15			
	16			
	17			
	18			
	19			
	20			
	21			
	22			
	23			
	24			

"AS BUILT" PILE DATA

LOCATION	PILE NO.	LENGTH IN PLACE (FT.)	COMPUTED BEARING (TONS)	REMARKS
	25			
	26			
	27			
INT.BENT NO. 3	28			
	29			
	30			
	31			
	32			
	33			
	34			
	35			
	36			

NOTE: THIS SHEET TO BE COMPLETED BY MHTD CONSTRUCTION PERSONNEL.

DETAILED APR. 1993
CHECKED APR. 1993

NOTE: THIS DRAWING IS NOT TO SCALE. FOLLOW DIMENSIONS.

JACKSON COUNTY A-1427R1

#52 249

STATE	PROJ. NO.	SHEET NO.
MO.		269

"AS BUILT" PILE DATA

LOCATION	PILE NO.	LENGTH IN PLACE (FT.)	COMPUTED BEARING (TONS)	REMARKS
	37			
	38			
	39			
	40			
	41			
	42			
	43			
INT.BENT NO. 4	44			
	45			
	46			
	47			
	48			
	49			
	50			
	51			
	52			
	53			
	54			
	55			
	56			
	57			
	58			
	59			
	60			
	61			
	62			
	63			
INT.BENT NO. 5	64			
	65			
	66			
	67			
	68			
	69			

"AS BUILT" PILE DATA

LOCATION	PILE NO.	LENGTH IN PLACE (FT.)	COMPUTED BEARING (TONS)	REMARKS
	70			
	71			
	72			
	73			
	74			
	75			
	76			
	77			
	77			
	78			
	79			
END BENT NO. 6	80			
	81			
	82			
	83			
	84			
	85			
	86			
	87			
	88			
	89			
	90			

"AS BUILT" PILE DATA

LOCATION	PILE NO.	LENGTH IN PLACE (FT.)	COMPUTED BEARING (TONS)	REMARKS

NOTE: INDICATE IN REMARK COLUMN:
A.) IF PILING WERE DRIVEN TO PRACTICAL REFUSAL.
B.) PILE BATTER IF OTHER THAN SHOWN ON BENT DETAIL SHEET.
C.) TYPE OF PILING USED.

MISC. PILES IN PLACE
PILES IN PLACE
MAY 1992
RECEIVED
2 0 1992

NOTE: THIS SHEET TO BE COMPLETED BY MHTD CONSTRUCTION PERSONNEL.

DETAILED APR. 1993
CHECKED APR. 1993

NOTE: THIS DRAWING IS NOT TO SCALE. FOLLOW DIMENSIONS.

JACKSON COUNTY A-1427R1

STATE	PROJ. NO.	SHEET NO.
MO.		270

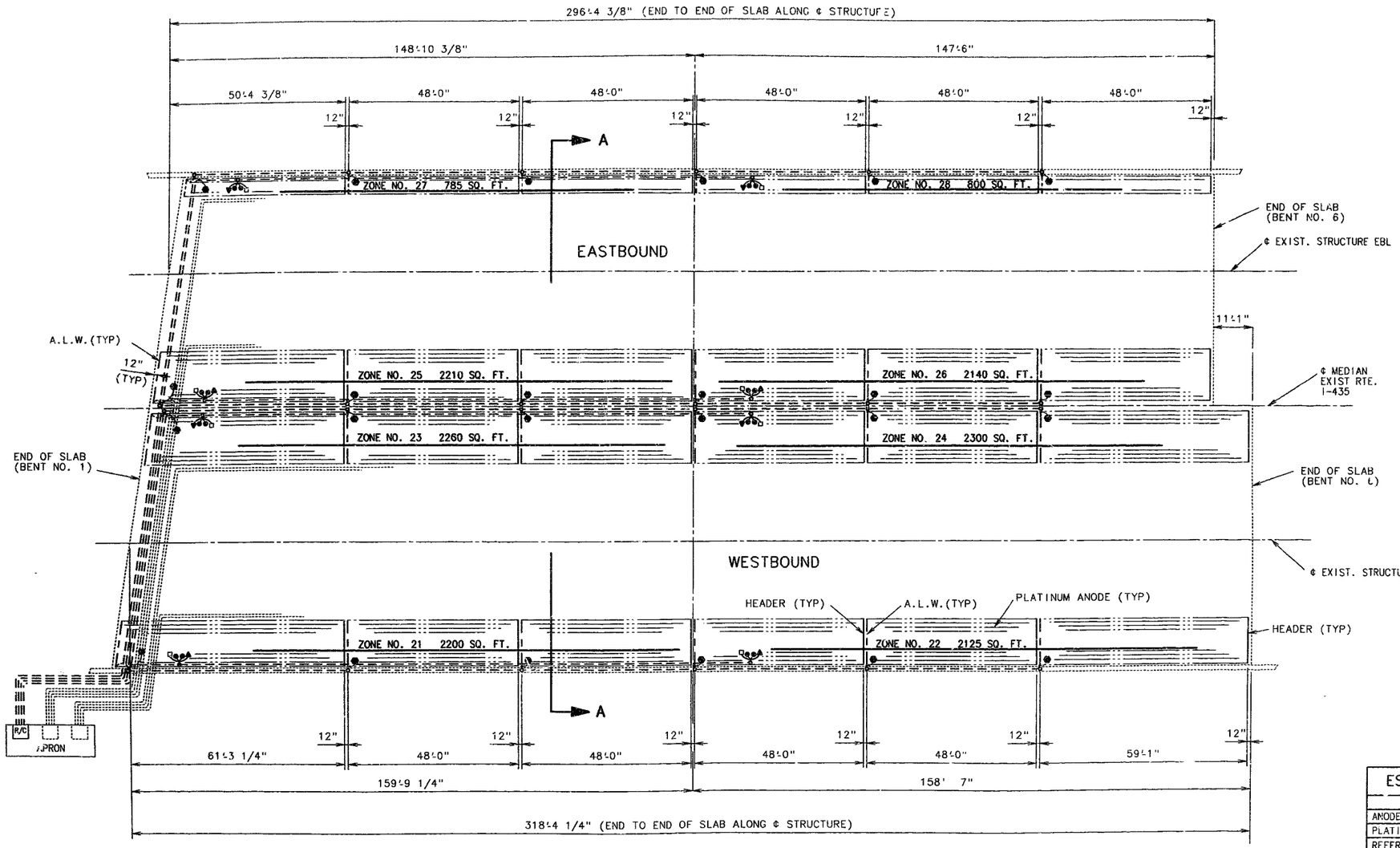

PART PLAN OF SLAB SHOWING PLATINUM CATHODIC PROTECTION SYSTEM (ALTERNATE "A")

DENOTATIONS

- A.L.W. (ANODE LEAD WIRE)
- HEADER
- PLATINUM ANODE
- SYSTEM NEGATIVE CONNECTION
- REFERENCE CELL
- GROUNDS
- REBAR PROBE (CORROSOMETER)
- CONDUIT

NOTE:

THE ANODE LEADS AND SYSTEM NEGATIVE RETURN LEADS SHALL BE ROUTED IN THE SAME CONDUIT.

THE REFERENCE CELL, REFERENCE CELL GROUND LEAD, REBAR PROBE AND PROBE GROUND LEAD SHALL BE ROUTED IN THE SAME CONDUIT.

THE REFERENCE CELL GROUND LEAD SHALL BE WELDED TO TOP REBAR WITHIN ONE FOOT OF THE REFERENCE CELL.

ALL ZONES ARE SIMILAR WITH VARYING WIDTHS (SEE SECTION THRU SLAB).

ANODE ASSEMBLY NUMBER MUST MATCH ZONE NUMBER.

NOTE:

FOR SECTION A-A, TYPICAL ZONE LAYOUT AND PARTIAL ELECTRICAL SCHEMATIC, SEE SHEET NO. 57.

NOTE: FOR PART PLAN SHOWING LOCATION OF NEW RECTIFIER AND RELOCATION OF EXISTING RECTIFIERS, SEE SHEET NO. 60.

NOTE:

DIMENSIONS ARE ALONG ¢ OF EXIST. STRUCTURE (END OF SLAB TO END OF SLAB).

THE ANODE LEAD WIRE AND HEADER SHALL BE NO. 10 STRANDED COPPER WIRE WITH HMWPE INSULATION.

FACTORY SUPPLIED FIELD SPLICES WILL BE PERMITTED BETWEEN STAGES ON THE ANODE LEAD WIRE (A.L.W.) AND HEADER AS DIRECTED BY THE ENGINEER.

THE EXISTING CATHODIC PROTECTION SYSTEM, (ZONES 1 THRU 20), SHALL REMAIN IN PLACE.

ESTIMATED QUANTITIES

FOR INFORMATION ONLY

ITEM	UNIT	QUANTITY
ANODE LEAD WIRE & HEADER	LIN. FT.	624
PLATINUM ANODES	LIN. FT.	15136
REFERENCE CELLS	EACH	8
REBAR PROBES	EACH	8
THERMITE WELDS	EACH	100 *
CONDUIT 2" Ø PVC	LIN. FT.	2269 **
CONDUIT 1 1/2" Ø PVC	LIN. FT.	56

NOTE: ANODE AND CONDUIT LENGTHS ARE APPROXIMATE, ACTUAL LENGTHS ARE THE RESPONSIBILITY OF THE CONTRACTOR.

(*)-SEE SHEET NO. 61 FOR LOCATION OF GROUNDS AT STRINGERS AND REINFORCING MATS.

(**)-QUANTITY DOES NOT INCLUDE CONDUIT FOR RELOCATING EXISTING RECTIFIER CONTROLLERS.

DETAILED DEC. 1992
CHECKED APR. 1993

NOTE: THIS DRAWING IS NOT TO SCALE. FOLLOW DIMENSIONS.

JACKSON COUNTY A-1427R1

STATE	PROJ. NO.	SHEET NO.
MO.		27

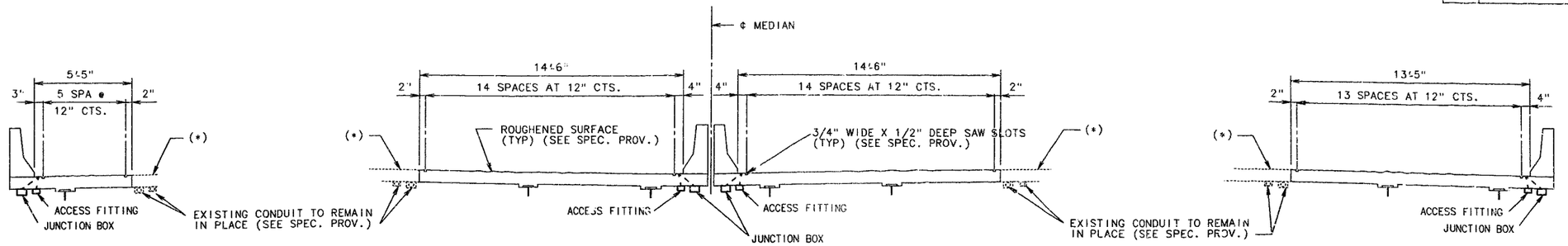

SECTION A-A
(AT ALTERNATE "A")

(*)-EXISTING CATHODIC PROTECTION SYSTEM TO REMAIN IN PLACE. (SEE SPEC. PROV.).

NOTE: FOR LOCATION OF SECTION A-A, SEE SHEET NO. 56.

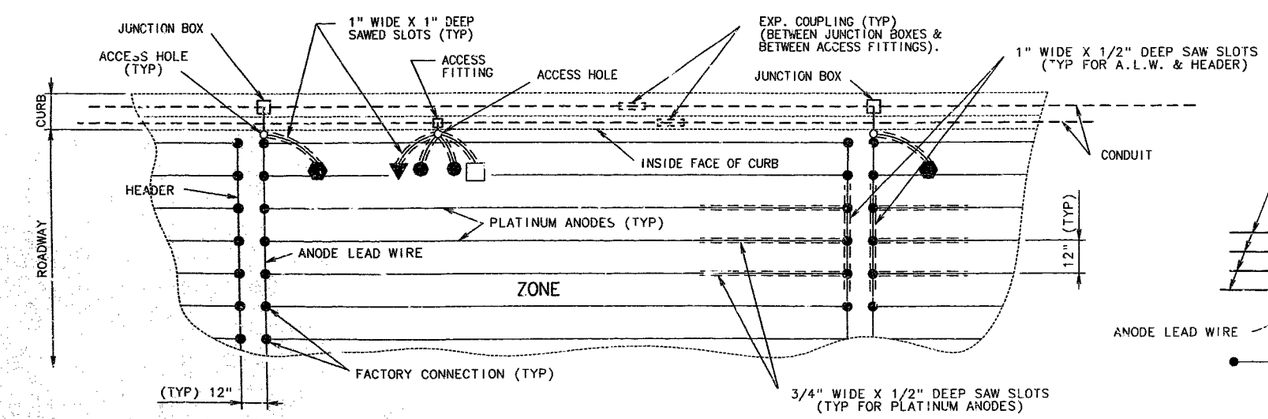

TYPICAL ZONE LAYOUT, EXCEPT AS NOTED, FOR (ALTERNATE "A") SYSTEM

NOTE: ANODES SHALL BE PLACED AS SHOWN WITH A MINIMUM TOLERANCE OF PLUS OR MINUS THREE INCHES.

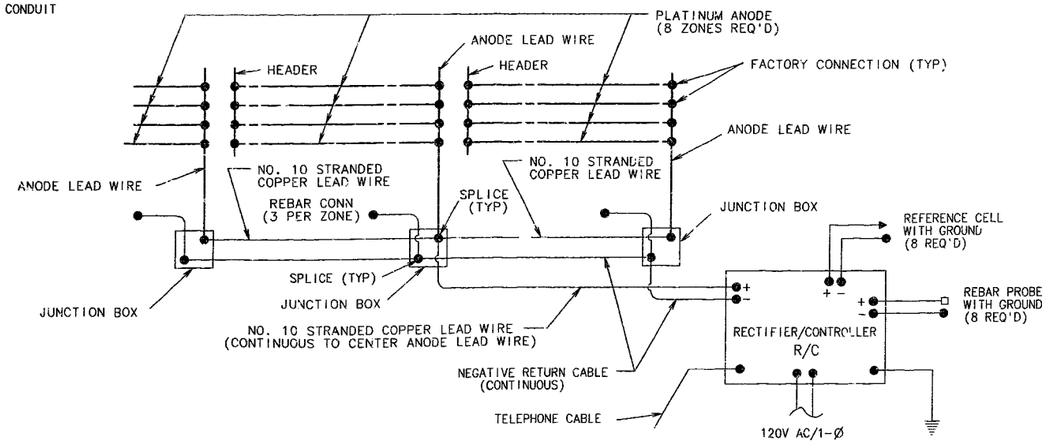

PARTIAL SCHEMATIC
(ALTERNATE "A")

DETAILED OCT. 1992
CHECKED APR. 1993

NOTE: THIS DRAWING IS NOT TO SCALE. FOLLOW DIMENSIONS.

JACKSON COUNTY A-1427R1

STATE	PROJ. NO.	SHEET NO.
MO.		272

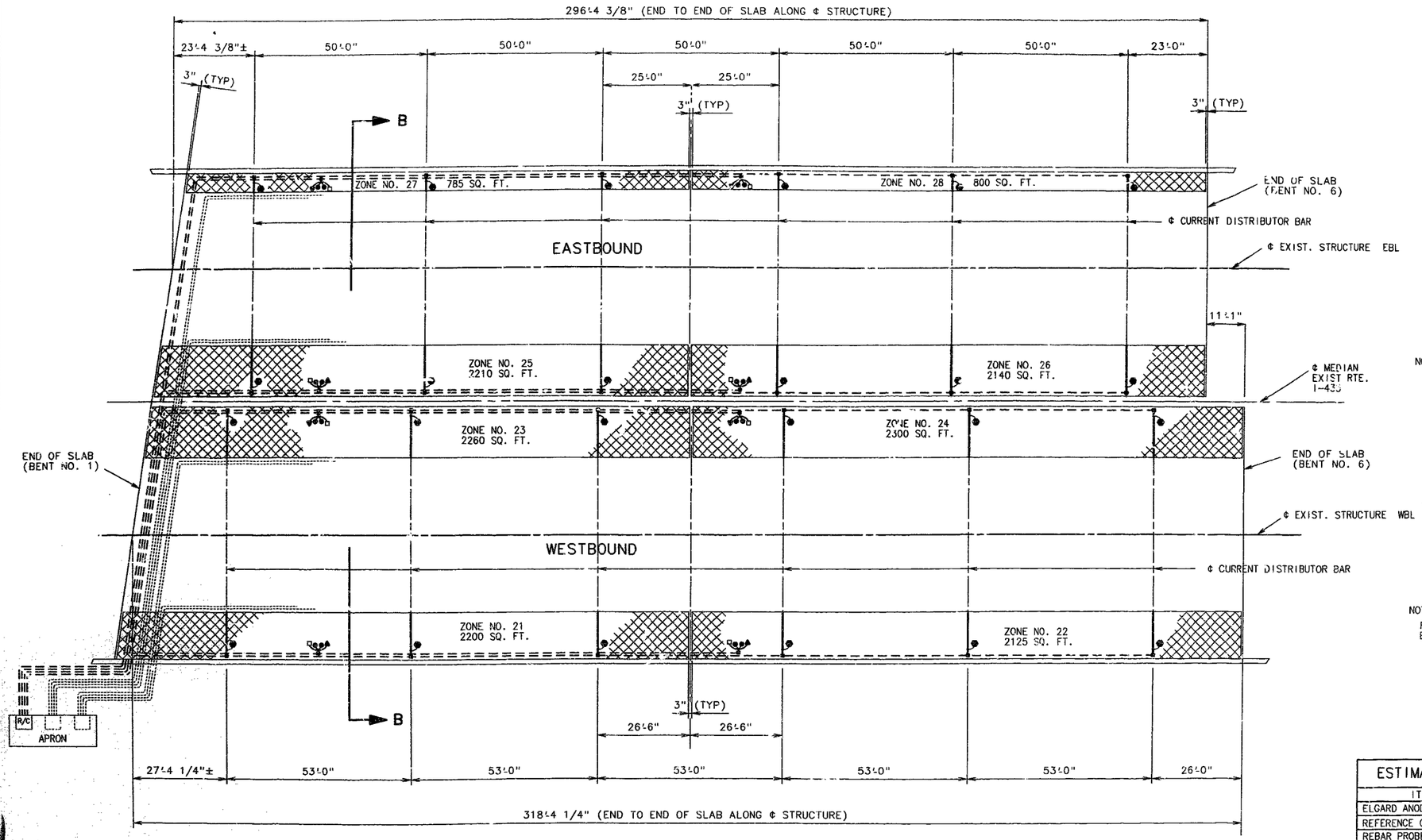

PART PLAN OF SLAB SHOWING ELGARD ANODE MESH CATHODIC PROTECTION SYSTEM (ALTERNATE "B")

DENOTATIONS

- ELGARD ANODE MESH
- SYSTEM NEGATIVE CONNECTION
- REFERENCE CELL
- GROUNDS
- REBAR PROBE (CORROSOMETER)
- CONDUIT

NOTE:

THE ANODE LEADS AND SYSTEM NEGATIVE RETURN LEADS SHALL BE ROUTED IN THE SAME CONDUIT.

THE REFERENCE CELL, REFERENCE CELL GROUND LEAD, REBAR PROBE AND PROBE GROUND LEAD SHALL BE ROUTED IN THE SAME CONDUIT.

THE REFERENCE CELL GROUND LEAD SHALL BE WELDED TO TOP REBAR WITHIN ONE FOOT OF THE REFERENCE CELL.

ALL ZONES ARE SIMILAR WITH VARYING WIDTHS (SEE SECTION THRU SLAB).

ANODE ASSEMBLY NUMBER MUST MATCH ZONE NUMBER.

NOTE:

FOR SECTION B-B, TYPICAL ZONE LAYOUT AND PARTIAL ELECTRICAL SCHEMATIC, SEE SHEET NO. 59.

ESTIMATED QUANTITIES	FOR INFORMATION ONLY	
ITEM	UNIT	QUANTITY
ELGARD ANODE MESH (210)	SQ. FT.	13393
REFERENCE CELLS	EACH	8
REBAR PROBES	EACH	8
THERMITE WELDS	EACH	100 *
CONDUIT 2" Ø PVC	LIN. FT.	2445 **
CONDUIT 1 1/2" Ø PVC	LIN. FT.	36

NOTE: ANODE AND CONDUIT LENGTHS ARE APPROXIMATE, ACTUAL LENGTHS ARE THE RESPONSIBILITY OF THE CONTRACTOR.

(*)-SEE SHEET NO. 61 FOR LOCATION OF GROUNDS AT STRINGERS AND REINFORCING MATS.

(**)-QUANTITY DOES NOT INCLUDE CONDUIT FOR RELOCATING EXISTING RECTIFIER CONTROLLERS.

NOTE: FOR PART PLAN SHOWING LOCATION OF NEW RECTIFIER AND RELOCATION OF EXISTING RECTIFIERS, SEE SHEET NO. 60.

NOTE:

DIMENSIONS ARE ALONG ¢ OF EXIST. STRUCTURE (END OF SLAB TO END OF SLAB).

THE EXISTING CATHODIC PROTECTION SYSTEM, (ZONES 1 THRU 20), SHALL REMAIN IN PLACE.

DETAILED OCT. 1992
CHECKED APR. 1993

NOTE: THIS DRAWING IS NOT TO SCALE. FOLLOW DIMENSIONS.

JACKSON COUNTY A-1427R1

STATE	PROJ. NO.	SHEET NO.
MO.		273

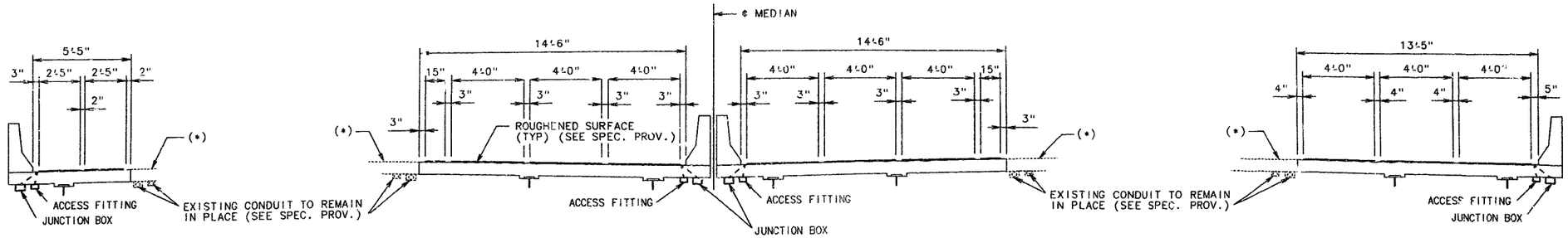

SECTION B-B

(AT ALTERNATE "B")

(*)-EXISTING CATHODIC PROTECTION SYSTEM TO REMAIN IN PLACE. (SEE SPEC. PROV.).

NOTE: FOR LOCATION OF SECTION B-B, SEE SHEET NO. 58.

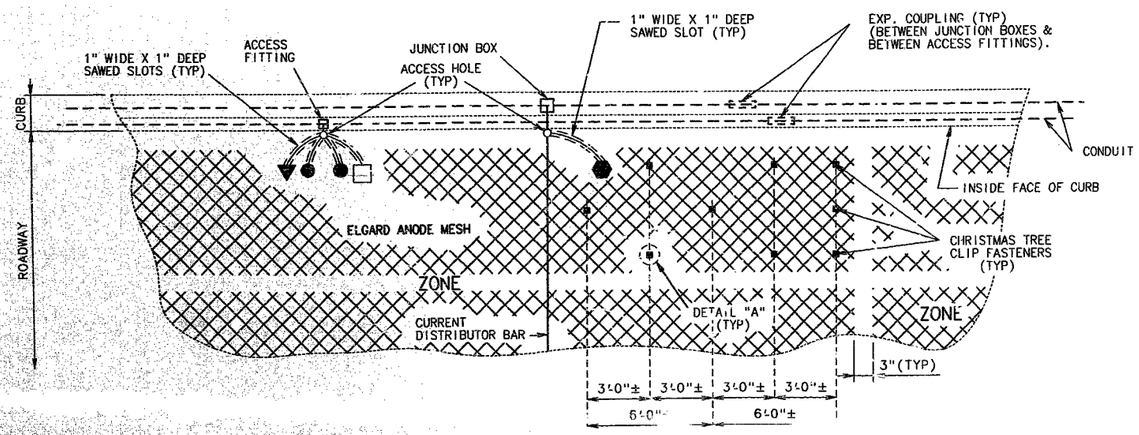

TYPICAL ZONE LAYOUT, EXCEPT AS NOTED, FOR (ALTERNATE "B") SYSTEM

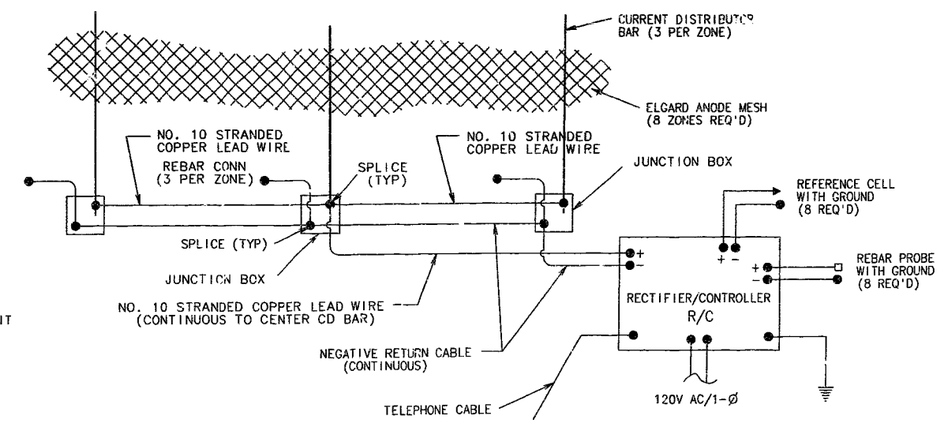

PARTIAL SCHEMATIC (ALTERNATE "B")

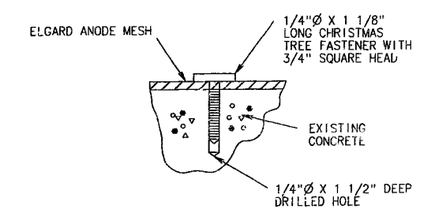

DETAIL "A"

(CHRISTMAS TREE CLIP)

298 254

DETAILED OCT. 1992
CHECKED APR. 1993

NOTE: THIS DRAWING IS NOT TO SCALE. FOLLOW DIMENSIONS.

JACKSON COUNTY

A-1427R1

STATE	PROJ. NO.	SHEET NO.
MO.		274

NOTE:

COST OF RELOCATING THE EXISTING RECTIFIERS, REMOVING THE EXISTING CONCRETE APRON, MODIFYING EXISTING CONDUIT AND WIRING SYSTEM AND/OR PROVIDING NEW CONDUIT AND WIRING SYSTEM AS REQUIRED TO COMPLETE THE HOOK-UP OF THE RELOCATED RECTIFIERS SHALL BE INCLUDED IN THE CONTRACT UNIT PRICE, PER LUMP SUM, FOR CATHODIC PROTECTION SYSTEM.

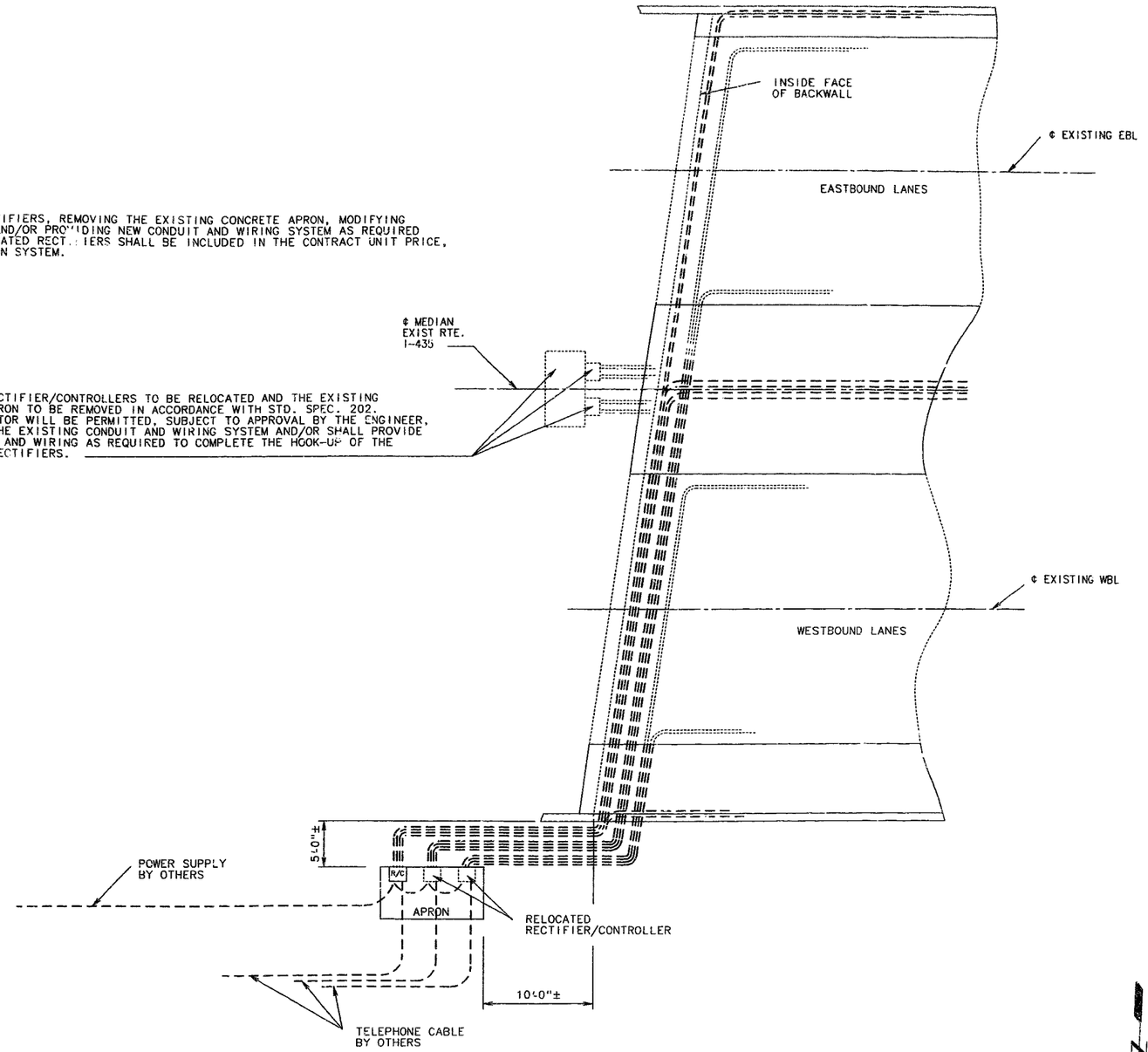

PART PLAN SHOWING LOCATION OF NEW RECTIFIER AND RELOCATION OF EXISTING RECTIFIERS

DETAILED DEC. 1992
CHECKED APR. 1993

NOTE: THIS DRAWING IS NOT TO SCALE. FOLLOW DIMENSIONS.

JACKSON COUNTY A-1427R1

299255

STATE	PROJ. NO.	SHEET NO.
MO.		275

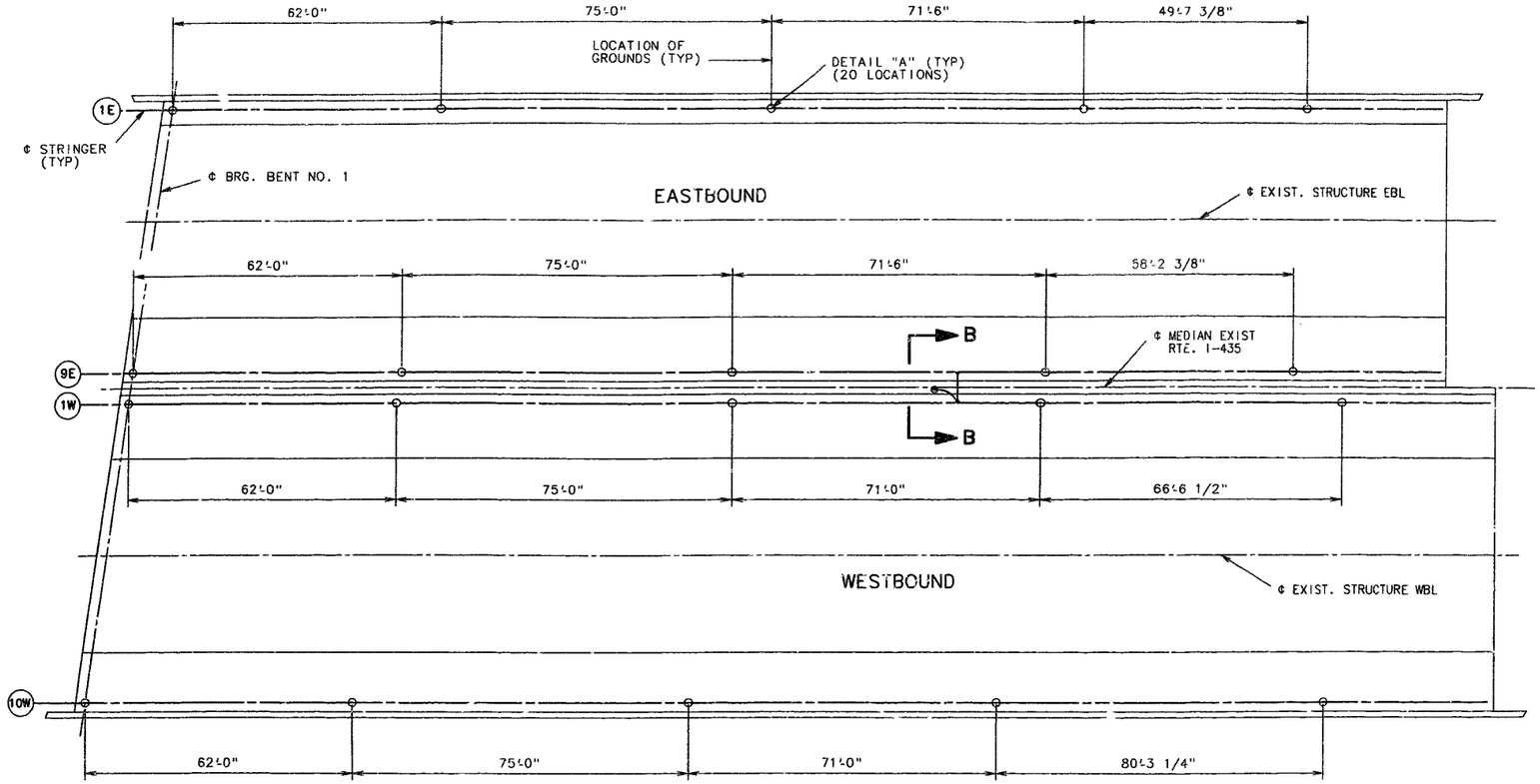

PART PLAN OF SLAB SHOWING LOCATION OF GROUNDS AT STRINGERS AND REINFORCING MATS

NOTE:
PAYMENT FOR GROUNDING, COMPLETE-IN-PLACE SHALL BE PAID FOR IN THE UNIT PRICE BID FOR CATHODIC PROTECTION SYSTEM, LUMP SUM.

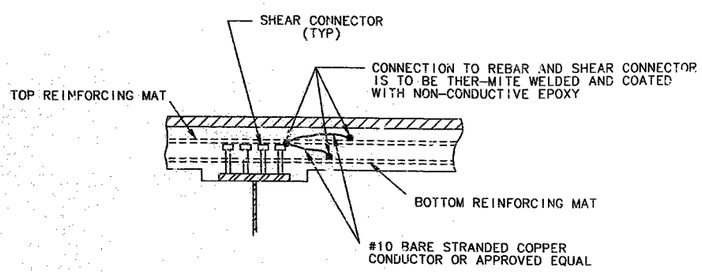

DETAIL "A"
(20 LOCATIONS)

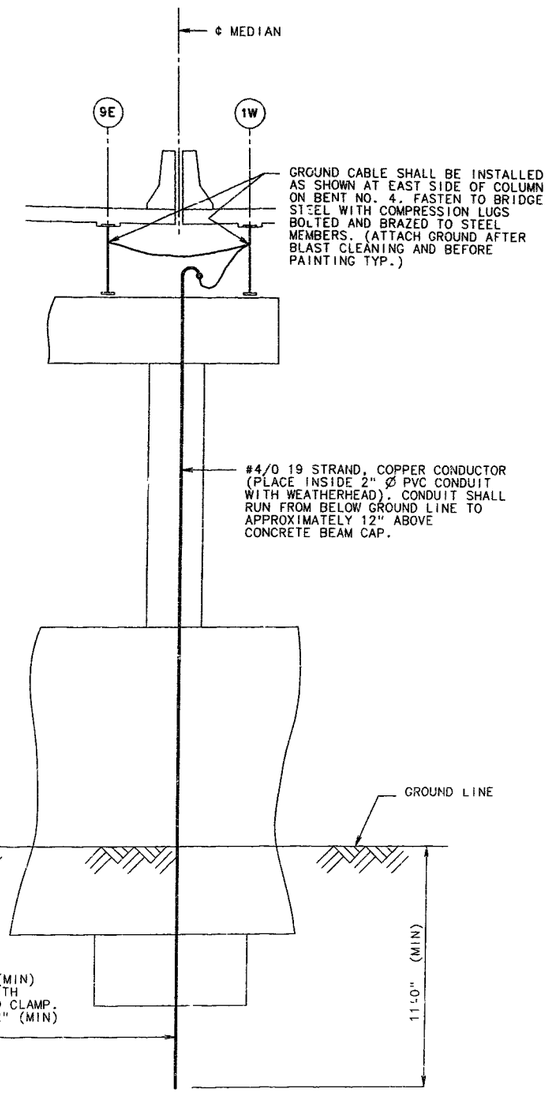

SECTION B-B
AT EAST SIDE OF BENT NO. 4

FOR CONDUIT NOTES, SEE SHEET NO. 62.

DETAILED DEC. 1992
CHECKED APR. 1993

NOTE: THIS DRAWING IS NOT TO SCALE. FOLLOW DIMENSIONS.

JACKSON COUNTY A-1427R1

388236

STATE	PROJ. NO.	SHEET NO.
MO.		276

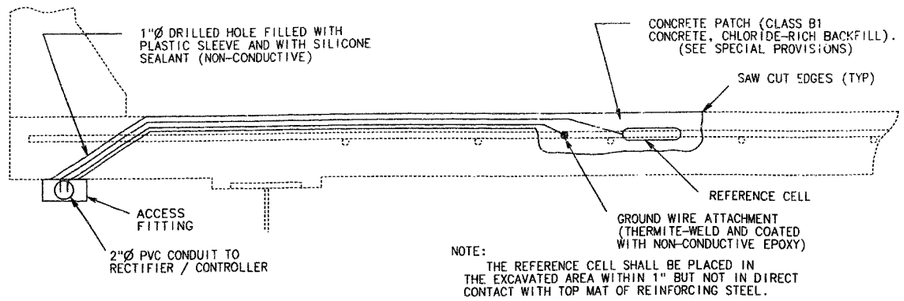

NOTE:
THE REFERENCE CELL SHALL BE PLACED IN THE EXCAVATED AREA WITHIN 1" BUT NOT IN DIRECT CONTACT WITH TOP MAT OF REINFORCING STEEL.

REFERENCE CELL DETAILS

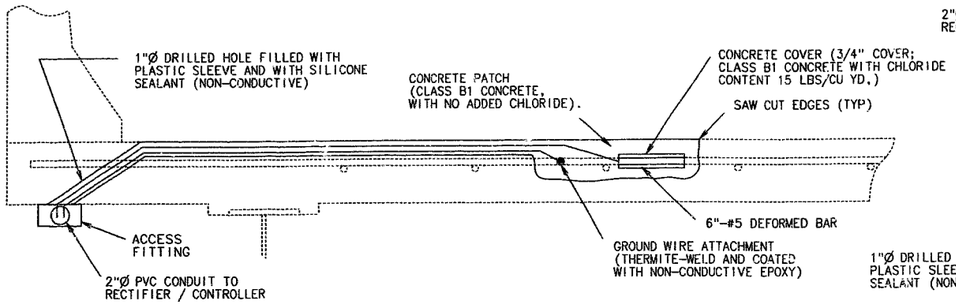

REBAR PROBE DETAILS

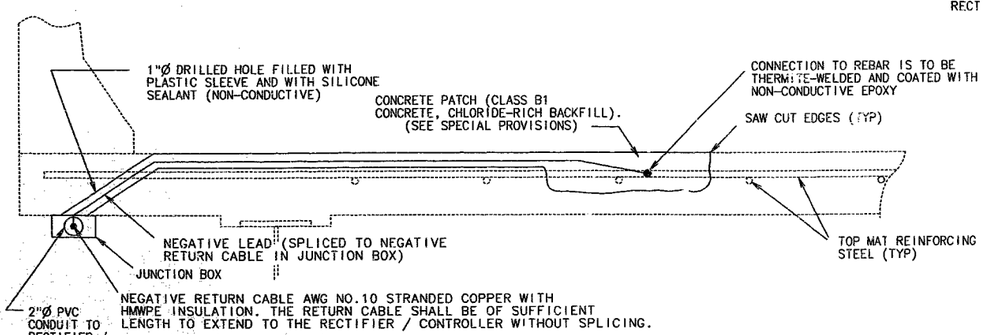

SYSTEM NEGATIVE CONNECTION DETAILS

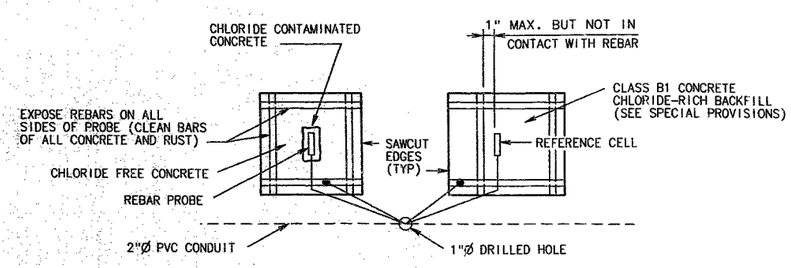

PLAN OF REBAR PROBE AND REFERENCE CELL

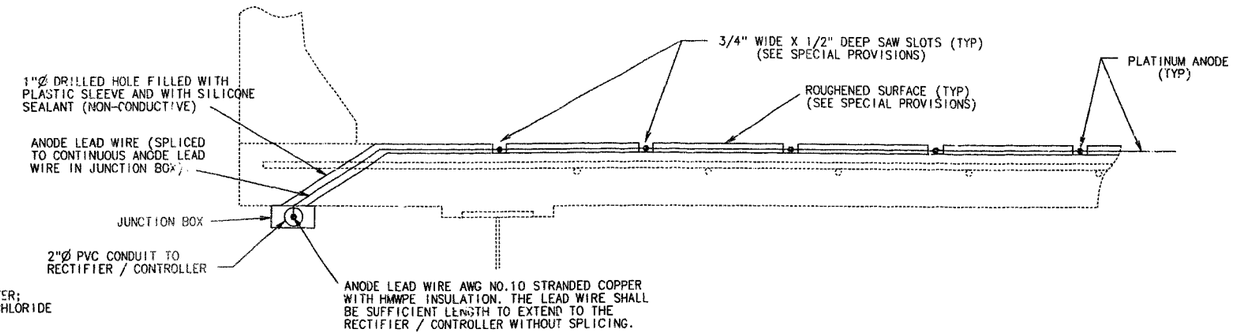

ALTERNATE "A"

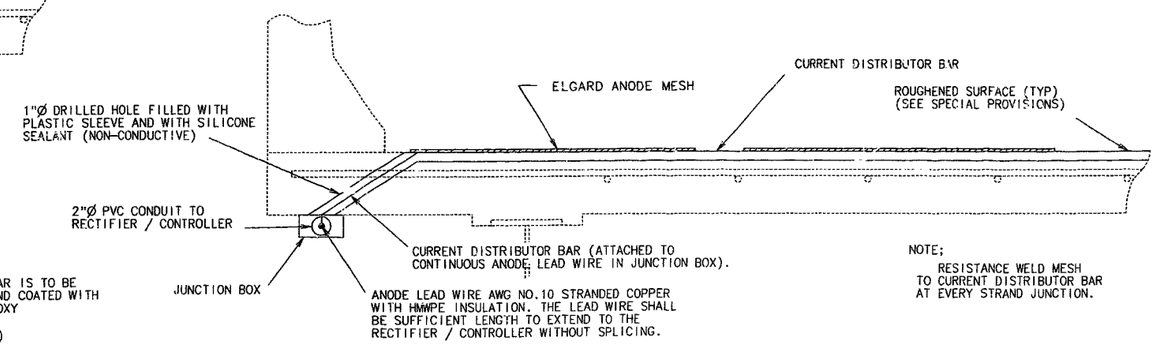

NOTE;
RESISTANCE WELD MESH TO CURRENT DISTRIBUTOR BAR AT EVERY STRAND JUNCTION.

ALTERNATE "B"

NOTE:
ALL CONCRETE REMOVAL SHALL BE INITIATED BY SAW CUTTING THE FIRST 1/2".

NOTE:

CONDUIT SHALL BE SCHEDULE 40 HEAVY WALL PVC (POLYVINYL CHLORIDE PLASTIC). EACH SECTION OF CONDUIT SHALL BEAR THE UNDERWRITERS LABORATORIES, INC. (UL) LABEL.

CONDUIT SHALL BE SECURED TO CONCRETE WITH CLAMPS (GALVANIZED/AASHTO M111) AT ABT. 5'-0" CTS. CONCRETE ANCHORS FOR CLAMPS SHALL MEET FEDERAL SPECIFICATION FF-S-325, GROUP II,TYPE 4, CLASS 1 AND SHALL BE GALVANIZED IN ACCORDANCE WITH ASTM A-153, B695-91 CLASS 50 OR STAINLESS STEEL. MINIMUM EMBEDMENT IN CONCRETE SHALL BE 1 3/4". THE SUPPLIER SHALL FURNISH A MANUFACTURERS CERTIFICATION THAT THE CONCRETE ANCHORS MEET THE REQUIRED MATERIAL AND GALVANIZING SPECIFICATIONS.

WEEPHOLES SHALL BE PROVIDED AT APPROPRIATE LOCATIONS TO DRAIN ANY MOISTURE IN THE CONDUIT LINES.

EXPANSION COUPLINGS SHALL BE INSTALLED ON CONDUIT LINES BETWEEN ALL JUNCTION BOXES AND BETWEEN ALL ACCESS FITTINGS AS APPROVED BY THE ENGINEER.

THE LOCATION AND DIRECTION OF CONDUIT MAY BE SHIFTED TO MEET FIELD CONDITIONS AS DIRECTED BY THE ENGINEER.

ALL JUNCTION BOXES SHALL BE PVC MOLDED, SURFACE MOUNTED, SIZE 6" X 6" X 4" AND EQUAL TO CARLON ELECTRICAL CONSTRUCTION PRODUCTS OR TRIANGLE CONDUIT AND CABLE COMPANY INC. THE TERMINATIONS SHALL BE PERMANENT OR SEPERABLE.

THE TERMINATIONS AND COVERS SHALL BE OF WATERTIGHT CONSTRUCTION.

DETAILED: DEC. 1992
CHECKED: APR. 1993

NOTE: THIS DRAWING IS NOT TO SCALE. FOLLOW DIMENSIONS.

JACKSON COUNTY

A-1427R1

304257

STATE	PROJ. NO.	SHEET NO.
MO.		277

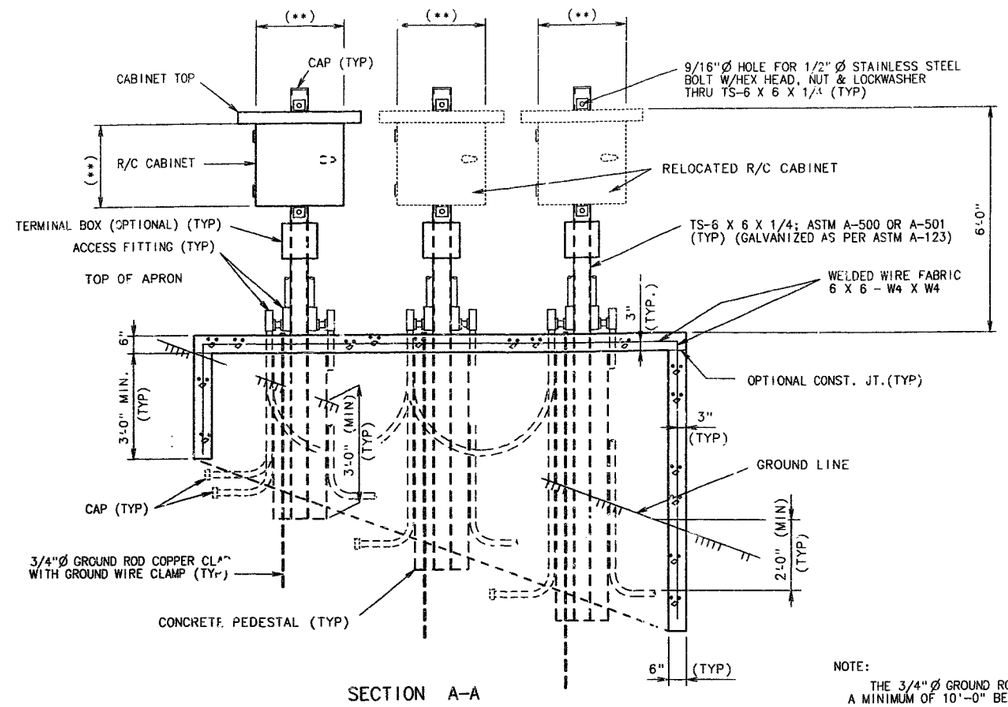

SECTION A-A

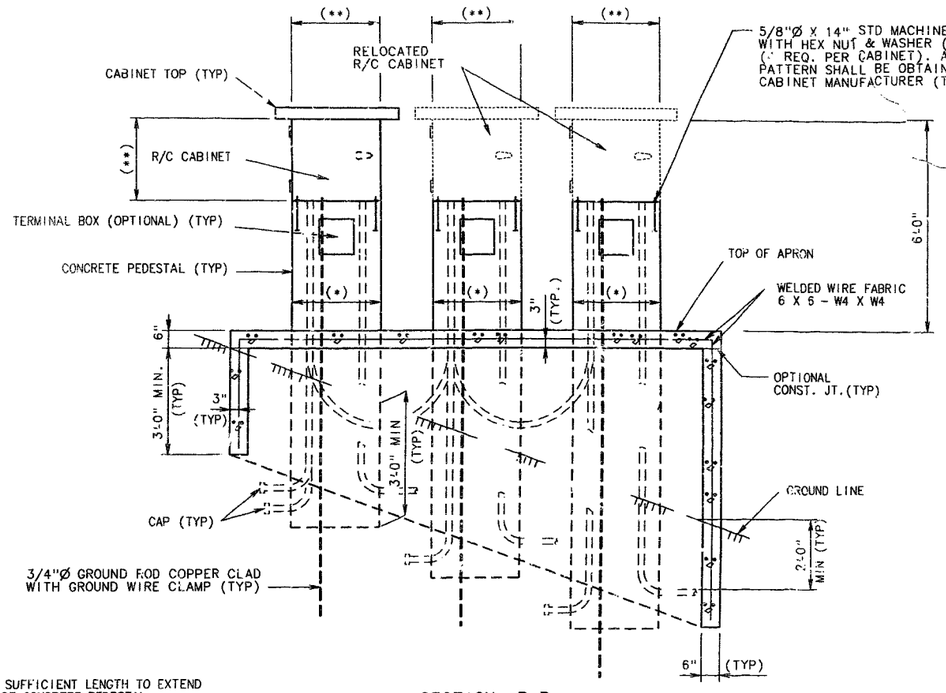

SECTION B-B

NOTE:

THE 3/4"Ø GROUND ROD SHALL BE SUFFICIENT LENGTH TO EXTEND A MINIMUM OF 10'-0" BELOW BOTTOM OF CONCRETE PEDESTAL.

GROUND WIRE SHALL BE NO.6 AWG MINIMUM.

KNOCKOUTS OR DRILLED HOLES SHALL BE PROVIDED IN CABINETS FOR ALL CONDUIT. LOCATIONS OF THESE HOLES ARE THE RESPONSIBILITY OF THE CONTRACTOR AND CABINET MANUFACTURER.

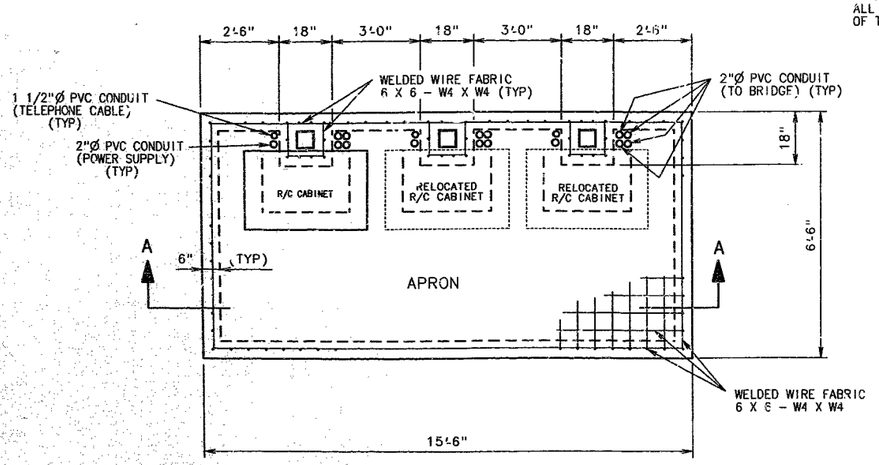

PLAN OPTION "A"

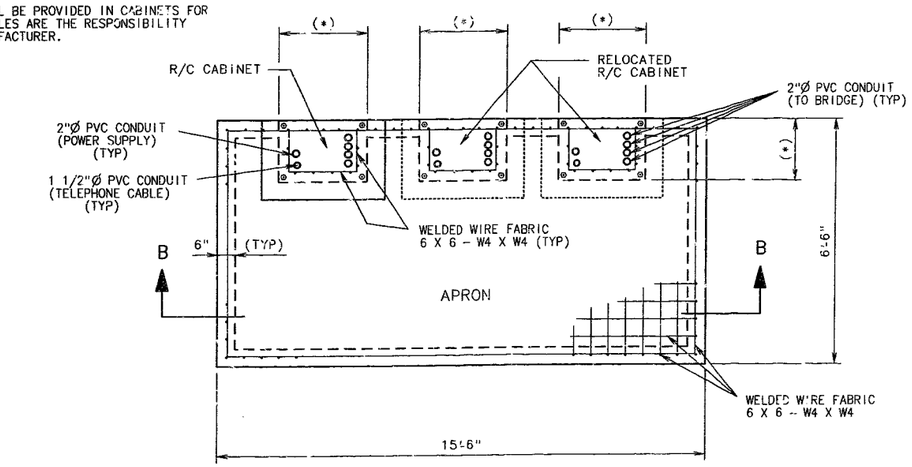

PLAN OPTION "B"

(**) DIMENSIONS ACCORDING TO MANUFACTURER'S SPECIFICATIONS.

(*) DIMENSIONS ACCORDING TO MANUFACTURED CABINET

DETAILED DEC. 1992
CHECKED APR. 1993

NOTE: DRAWING IS NOT TO SCALE. FOLLOW DIMENSIONS.

SHEET NO. 63 OF 63

JACKSON COUNTY

A-1427R1

382 750

MISSOURI HIGHWAY AND TRANSPORTATION COMMISSION

STATE	PROJ. NO.	SHEET NO.
MO.	J4I0807	215
SEC./SUR. 33	TWP. 48N	RGE. 3W

FINAL PLANS

WIDEN (45'-72'-72'-58'-46')EASTBOUND LANE, (45'-72'-72'-72'-54')WESTBOUND LANE CONTINUOUS COMPOSITE I-BEAM
+2.197% GRADE

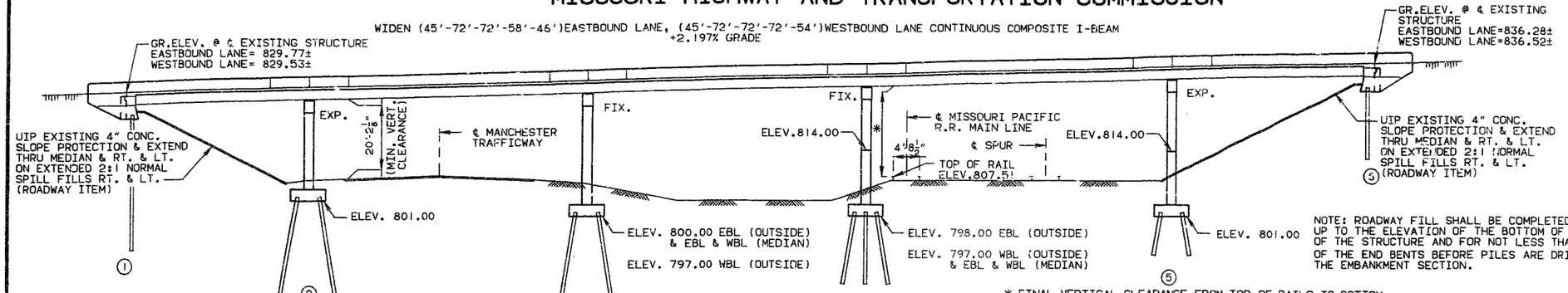

NOTE: ROADWAY FILL SHALL BE COMPLETED TO THE FINAL ROADWAY SECTION AND UP TO THE ELEVATION OF THE BOTTOM OF THE CONCRETE BEAM WITHIN THE LIMITS OF THE STRUCTURE AND FOR NOT LESS THAN 25' IN BACK OF THE FILL FACE OF THE END BENTS BEFORE PILES ARE DRIVEN FOR ANY BENTS FALLING WITHIN THE EMBANKMENT SECTION.

ELEVATION

* FINAL VERTICAL CLEARANCE FROM TOP OF RAILS TO BOTTOM OF SUPERSTRUCTURE TO BE AT LEAST 22'-6".

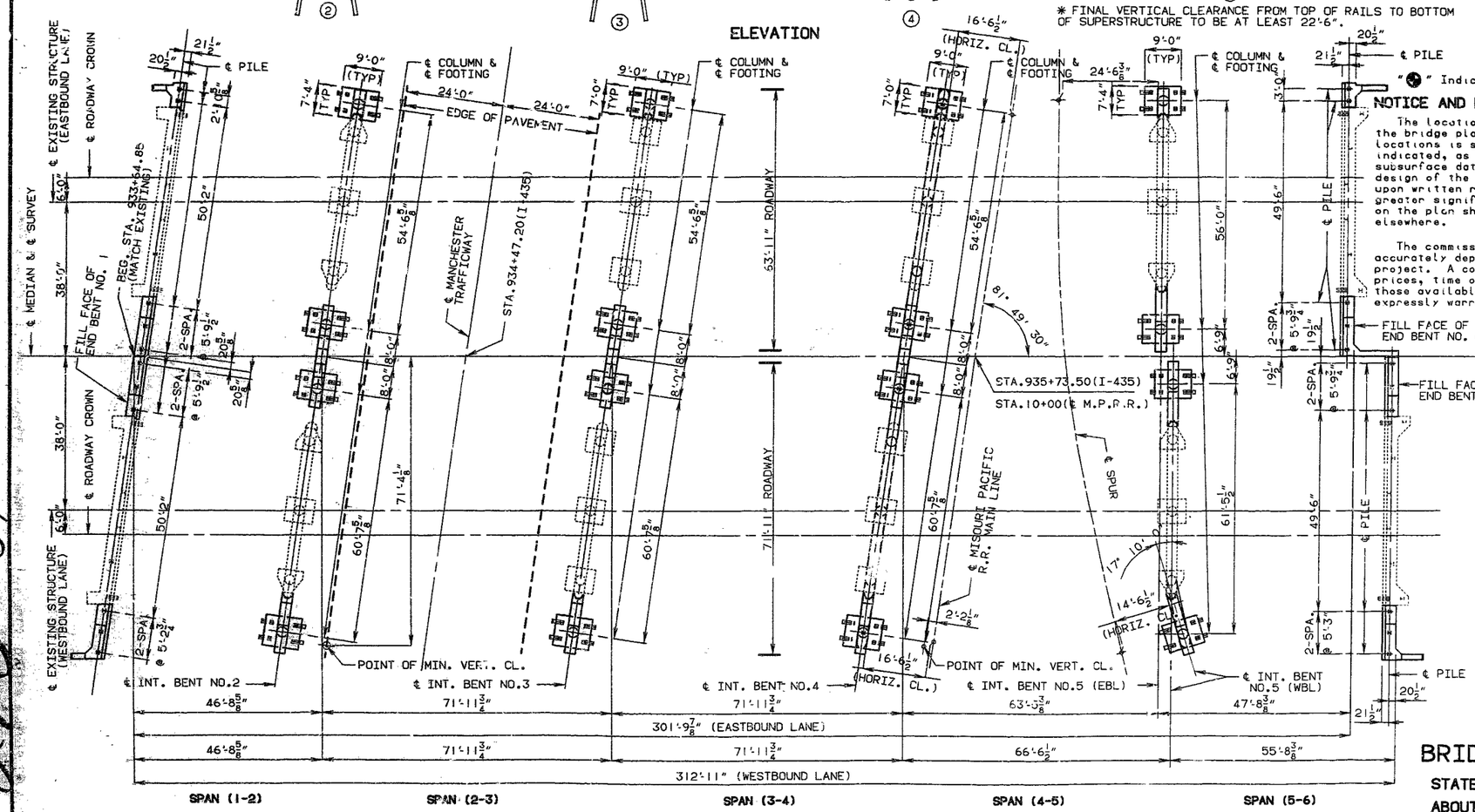

PLAN

NOTE: USE EXISTING BORING DATA AS SHOWN ON PLANS FOR EXISTING BRIDGE A-1427.

" ● " Indicates location of Borings.

NOTICE AND DISCLAIMER REGARDING BORING LOG DATA

The locations of all subsurface boring for this structure are shown on the bridge plan sheet for this structure. Boring data for the numbered locations is shown on sheet no. 2. The boring data for all locations indicated, as well as any other boring logs or other factual records of subsurface data and investigations performed by the department for the design of the project, is available from the district materials engineer upon written request as outlined in the project special provisions. No greater significance or weight should be given to the boring data depicted on the plan sheets than to subsurface data available from the district or elsewhere.

The commission does not represent or warrant that any such boring data accurately depicts the conditions to be encountered in constructing this project. A contractor assumes all risks it may encounter in basing its bid prices, time or schedule of performance on the boring data depicted here or those available from the district, or on any other documentation not expressly warranted, which the contractor may obtain from the commission.

NOTE: FOR GENERAL NOTES, PILE DATA AND ESTIMATED QUANTITIES, SEE SHEET NO. 2.

B.M. Elev. 831.77 P.K. on parapet Abut. #1 N.E. Corner Br. A-1427R1 72.5' +/- Rt. Sta. 933+57 +/-.

BRIDGE OVER MISSOURI PACIFIC R.R.

STATE ROAD FROM KANSAS STATE LINE TO RTE. 71
ABOUT 4.5 MILES NORTH OF MARTIN CITY

PROJECT NO. STA. 933+64.85 AT ℄ MEDIAN
JOB NO. J410807 RTE. I-435

JACKSON COUNTY

DATE 3/1/94

STD. 511.6
STD. 706.35
A-1427R1

DESIGNED AUG. 1992
DETAILED APR. 1993
CHECKED APR. 1993

NOTE: THIS DRAWING IS NOT TO SCALE. FOLLOW DIMENSIONS.

SHEET NO. 1 OF 63.

348 258

STATE	PROJ. NO.	SHEET NO.
MO.	J4I0807	

FINAL PLANS

FINAL QUANTITIES

ITEM		SUBSTR.	SUPERSTR.	TOTAL
CURB REMOVAL (BRIDGES) **	LIN.FT.		1,300	1,300
PARTIAL REMOVAL OF SUBSTRUCTURE CONCRETE	LUMP SUM	1		1
PARTIAL REMOVAL OF EXISTING BRIDGE DECK	SQ.FT.		1,678	1,678
CLASS 1 EXCAVATION	CU.YD.	636		636
TEMPORARY SHORING	LUMP SUM	1		1
STRUCTURAL STEEL PILES (10")	LIN.FT.	3490		3490
CLASS B CONCRETE (SUBSTRUCTURE)	CU.YD.	457.5		457.5
SLAB ON STEEL	SQ.YD.		1,833	1,833
SAFETY BARRIER CURB (16") *	LIN.FT.		1,282	1,282
MODIFIED LATEX CONCRETE WEARING SURFACE	SQ.YD.		1,651	1,651
LAMINATED NEOPRENE BEARING PADS (TAPERED)	EACH		14	14
PREFORMED COMPRESSION EXPANSION JT. SEAL (3.5 IN.)	LIN.FT.		14	14
REINFORCING STEEL (BRIDGES)	LB.	52,730		52,730
CATHODIC PROTECTION SYSTEM	LUMP SUM		1	1
FABRICATED STRUCTURAL CARBON STEEL (I-BEAM)	LB.		60,060	60,060
FABRICATED STRUCTURAL LOW ALLOY STEEL(I-BEAM) A572	LB.		318,370	318,370
SLAB DRAINS	EACH		34	34
REPAINTING (SYSTEM F) GRAY	LUMP SUM		1	1
EXISTING DIAPHRAGM CONNECTIONS TO FLANGE	LUMP SUM		1	1
TRANSPORTING LEAD CONTAMINATED RESIDUE	LUMP SUM			1
AMOUNT OF LEAD CONTAMINATED RESIDUE	TONS			250
CONTINGENT ITEM				
50601 DISPOSAL OF SANDBLAST RESIDUE	L.S.			1
50602 ANCHOR BOLTS	L.S.			1
50603 RECTIFIER	L.S.			1

* SAFETY BARRIER CURB SHALL BE ~~CAST-IN-PLACE~~ OPTION OR SLIP-FORM OPTION.

** INCLUDES ALUMINUM RAIL REMOVAL. RAILING NOT TO BE SALVAGED FOR THE STATE.

NOTE: ALL REINFORCEMENT IN THE END BENTS IS INCLUDED IN THE SUPERSTRUCTURE QUANTITIES.

ALL CONCRETE ABOVE THE LOWER CONSTRUCTION JOINT IN END BENTS IS INCLUDED IN THE ESTIMATED SUPERSTRUCTURE QUANTITIES FOR SLAB ON STEEL, SEE SPECIAL PROVISIONS.

THE COST OF FURNISHING, FABRICATING AND INSTALLING NEOPRENE BEARING PADS COMPLETE-IN-PLACE, WILL BE PAID FOR AT THE CONTRACT UNIT PRICE FOR LAMINATED NEOPRENE BEARING PADS PER EACH

ESTIMATED QUANTITIES FOR SLAB ON STEEL

ITEM		TOTAL
REINFORCING STEEL (PLAIN)	LB.	114,560
CONCRETE	CU.YD.	422.0

3 115,600

NOTE: THE TABLE OF ESTIMATED QUANTITIES FOR SLAB ON STEEL REPRESENTS THE QUANTITIES USED BY THE STATE IN PREPARING THE COST ESTIMATE FOR CONCRETE SLAB. VARIATIONS MAY BE ENCOUNTERED IN THESE ESTIMATED QUANTITIES BUT THESE VARIATIONS CANNOT BE USED FOR AN ADJUSTMENT IN CONTRACT UNIT PRICE PER SQUARE YARD OF SLAB ON STEEL.

IN ORDER TO MAINTAIN GRADE AND A MINIMUM THICKNESS OF OVERLAY AS SHOWN ON PLANS IT MAY BE NECESSARY TO USE ADDITIONAL QUANTITIES OF OVERLAY AT VARIOUS LOCATIONS THROUGHOUT THE STRUCTURE. NO PAYMENT WILL BE ALLOWED FOR ADDITIONAL LABOR, MATERIALS OR EQUIPMENT FOR VARIATIONS IN THICKNESS OF OVERLAY.

PILE AND FOOTING DATA

		EASTBOUND LANE						WESTBOUND LANE					
			2		4	5					4	5	6
PILE TYPE AND SIZE		HP10X42	HP10X42	HP10X42	HP10X42	HP10X42	HP10X42	HP10X42	HP10X42	HP10X42	HP10X42	HP10X42	HP10X42
NUMBER		5	8	8	10	8	5	6	8	8	10	8	6
APPROXIMATE LENGTH (FT.)	STAGE 1 CONST.	63 84	42	41	33	27	34	63 84	42	43 84	34 35	24 27	32 34
	STAGE 2 CONST.	64	42	42 84	31	20	32	63 84	43	39 38	39 38	29 38	40 38
DESIGN BEARING (TONS)		28	48	54	55	54	31	28	48	54	55	54	31
HAMMER ENERGY REQ'D (FT.-LBS.)	STAGE 1 CONST.	8,000	11,200	12,600	13,000	12,600	7,000	8,000	11,200	12,600	13,000	12,600	7,000
	STAGE 2 CONST.	8,000	11,200	12,600	13,000	12,600	7,000	8,000	11,200	12,600	13,000	12,600	7,000

MINIMUM ENERGY REQUIREMENT OF HAMMER IS BASED ON PLAN LENGTH AND DESIGN BEARING VALUE OF PILES.

ALL PILES SHALL BE DRIVEN TO PRACTICAL REFUSAL.

GENERAL NOTES:

DESIGN SPECIFICATIONS:

A.A.S.H.T.O. - 1992.
LOAD FACTOR DESIGN
A.A.S.H.T.O.-1983 GUIDE SPECIFICATIONS FOR SEISMIC DESIGN
SEISMIC PERFORMANCE CATEGORY A

DESIGN LOADINGS:

HS20-44
MODIFIED 24,000# TANDEM AXLE
EARTH 120#/CU. FT.
EQUIVALENT FLUID PRESSURE = 45#/CU. FT.
FATIGUE CASE II

DESIGN UNIT STRESSES:

CLASS B CONCRETE (SUBSTRUCTURE) f'c = 3,000 PSI.
CLASS B1 CONCRETE (SAFETY BARRIER CURB) f'c = 4,000 PSI.
CLASS B2 CONCRETE (SUPERSTRUCTURE EXCEPT SAFETY BARRIER CURB) f'c = 4,000 PSI.
REINFORCING STEEL (GRADE 60) fy = 60,000 PSI.
STEEL PILE fb = 9,000 PSI.
STRUCTURAL CARBON STEEL fy = 36,000 PSI.
STRUCTURAL STEEL (A.S.T.M. A572) GRADE 50 fy = 50,000 PSI.

FABRICATED STEEL CONNECTIONS:

FIELD CONNECTIONS SHALL USE HIGH STRENGTH BOLTS 3/4" Ø AND HOLES 13/16"Ø, EXCEPT AS NOTED.
HIGH STRENGTH BOLTS, NUTS AND WASHERS SHALL BESAMPLED FOR QUALITY ASSURANCE AS SPECIFIED IN STANDARD SPECIFICATION 106 AND FIELD SECTION (FS-712).

JOINT FILLER:

ALL JOINT FILLER SHALL MEET THE REQUIREMENTS OF STANDARD SPECIFICATION 1057.2.4, EXCEPT AS NOTED.

REINFORCING STEEL:

MINIMUM CLEARANCE TO THE REINFORCING STEEL SHALL BE 1-1/2" UNLESS OTHERWISE SHOWN.
ALL REINFORCING BARS IN TOPS OF SUBSTRUCTURE BEAMS OR CAPS SHALL BE SPACED TO CLEAR ANCHOR BOLTS FOR BEARINGS BY 1/2".

NEOPRENE PADS:

BEARINGS SHALL BE 60 DUROMETER NEOPRENE PADS. THE NEOPRENE PAD SHALL BE BONDED TO THE BEARING SEAT WITH AN EPOXY ADHESIVE AS APPROVED BY THE BEARING MANUFACTURER FOR BONDING NEOPRENE TO CONCRETE.

PAINTING:

SYSTEM **F** SHOP COATS (GRAY) NEW STEEL, SYSTEM **F** FIELD COATS (GRAY) IN ACORDANCE WITH THE SPECIAL PROVISIONS.

AREAS TO BE ENCASED IN END BENT CONCRETE SHALL BE PAINTED ONE COAT OF SYSTEM **F** TO PRODUCE A DRY FILM THICKNESS OF NOT LESS THAN 1.5 MILS NOR MORE THAN 2.5 MILS AND SCRATCHED OR DAMAGED SURFACES ARE TO BE TOUCHED UP IN THE FIELD BEFORE CONCRETE IS POURED.

CONSTRUCTION CLEARANCE:

MAINTAIN ONE OPENING 32'-0" WIDE & 14'-9" HIGH FOR MANCHESTER TRAFFICWAY.

TRAFFIC MAINTAINED:

MAINTAIN TRAFFIC ON EXISTING BRIDGE DURING CONSTRUCTION. (SEE ROAD PLANS)

OUTLINE OF OLD WORK IS INDICATED BY LIGHT DASHED LINES. HEAVY LINES INDICATE NEW WORK.

BARS BONDED IN OLD CONCRETE, NOT REMOVED, SHALL BE CLEANLY STRIPPED AND EMBEDDED INTO NEW CONCRETE WHERE POSSIBLE. IF LENGTH IS AVAILABLE, OLD BARS SHALL EXTEND INTO NEW CONCRETE AT LEAST 40 DIAMETERS FOR SMOOTH BARS AND 30 DIAMETERS FOR DEFORMED BARS,UNLESS OTHERWISE NOTED.

CONTRACTOR SHALL VERIFY ALL DIMENSIONS IN FIELD BEFORE ORDERING NEW STEEL.

RESIN ANCHOR SYSTEMS:

COST OF FURNISHING AND INSTALLING RESIN ANCHOR SYSTEMS SHALL BE INCLUDED IN THE CONTRACT UNIT PRICE FOR CONCRETE. SEE SPECIAL PROVISIONS FOR ACCEPTABLE RESIN ANCHOR SYSTEMS.

THESE RESIN ANCHOR SYSTEMS SHALL BE INSTALLED ACCORDING TO THE MANUFACTURER'S SPECIFICATIONS, EXCEPT AS MODIFIED BY THE JOB SPECIAL PROVISIONS AND THAT A #6 GRADE 60 REINFORCING BAR 2'-6" LONG SHALL BE SUBSTITUTED FOR THE 3/4" Ø THREADED ROD STUD.

260

DETAILED APR. 1993
CHECKED APR. 1993

NOTE: THIS DRAWING IS NOT TO SCALE. FOLLOW DIMENSIONS.

3 REVISED: JUNE 28, 1994

JACKSON COUNTY A-1427R1

STATE	PROJ. NO.	SHEET NO.
MO.	J4I0807	219

FINAL PLANS

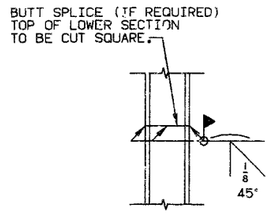

DETAIL OF STEEL PILE SPLICE

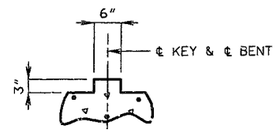

DETAIL OF KEY

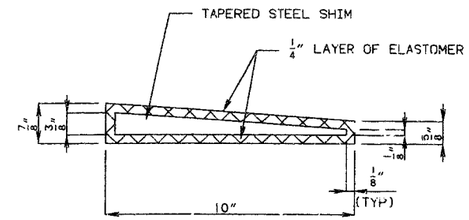

ELEVATION OF LAMINATED NEOPRENE BEARING (10" X 10")

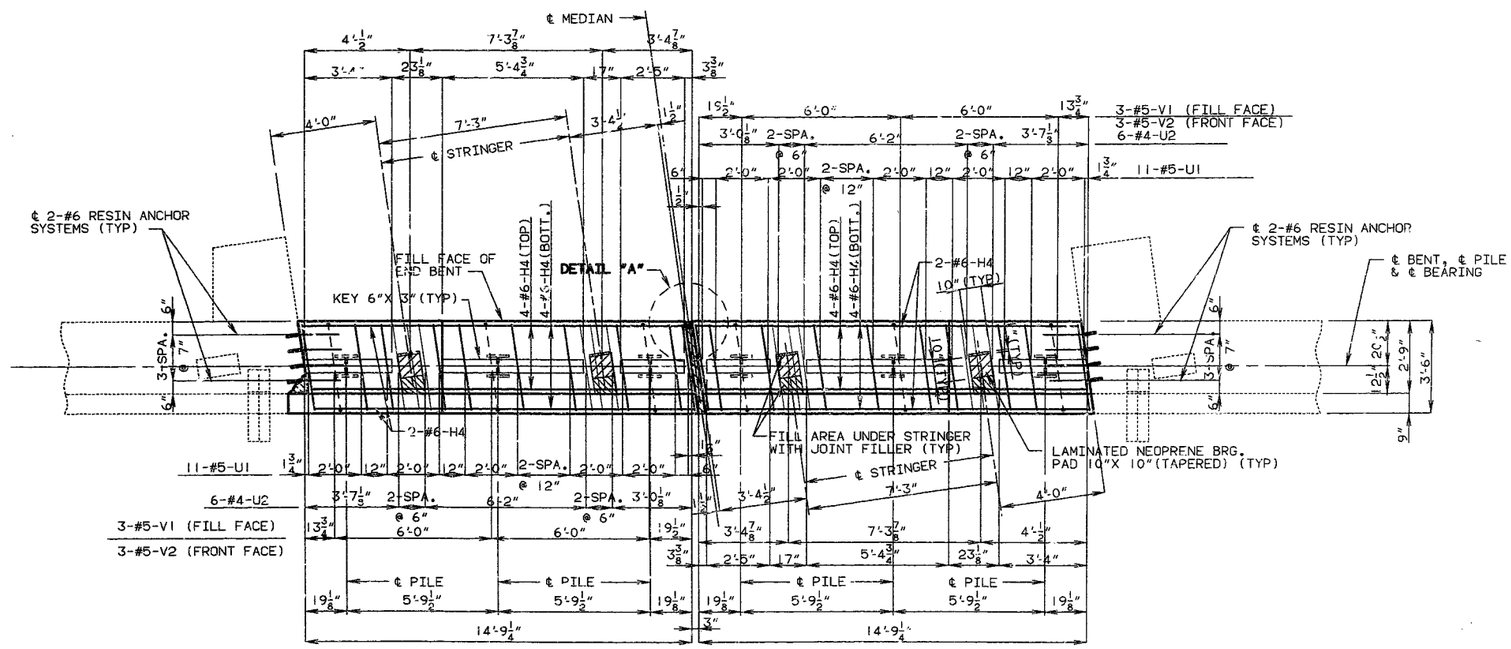

PART PLAN OF BEAM (WESTBOND LANE) PART PLAN OF BEAM (EASTBOND LANE)

NOTE: FOR PART SECTION NEAR OF END BENT, PART PLAN OF END BENT, SECTIONS THRU END BENT, DETAIL "A" AND DETAILS OF COMPRESSION JOINT SEAL IN BEAM AND DIAPHRAGM, SEE SHEET NO. 4.

THE AREA EXPOSED BY THE REMOVAL OF CONCRETE AND NOT COVERED BY NEW CONCRETE SHALL BE COATED WITH AN APPROVED BITUMINOUS PAINT.

SUBSTRUCTURE QUANTITIES

ITEM		QUANTITY
CLASS I EXCAVATION	CU.YD.	30.0
STRUCT. STEEL PILE (10")	LIN.FT.	697
CLASS B CONC.(SUBSTR.)	CU.YD.	22.7

THESE QUANTITIES ARE INCLUDED IN THE ESTIMATED QUANTITIES TABLE ON SHEET NO. 2.

DETAILS OF END BENT NO. 1 (STAGE 1 CONSTRUCTION)

DETAILED AUG. 1992
CHECKED MAR. 1993

NOTE: THIS DRAWING IS NOT TO SCALE. FOLLOW DIMENSIONS.

JACKSON COUNTY A-1427R1

Sheet 361

STATE	PROJ. NO.	SHEET NO.
MO.	J4I0807	222

FINAL PLANS

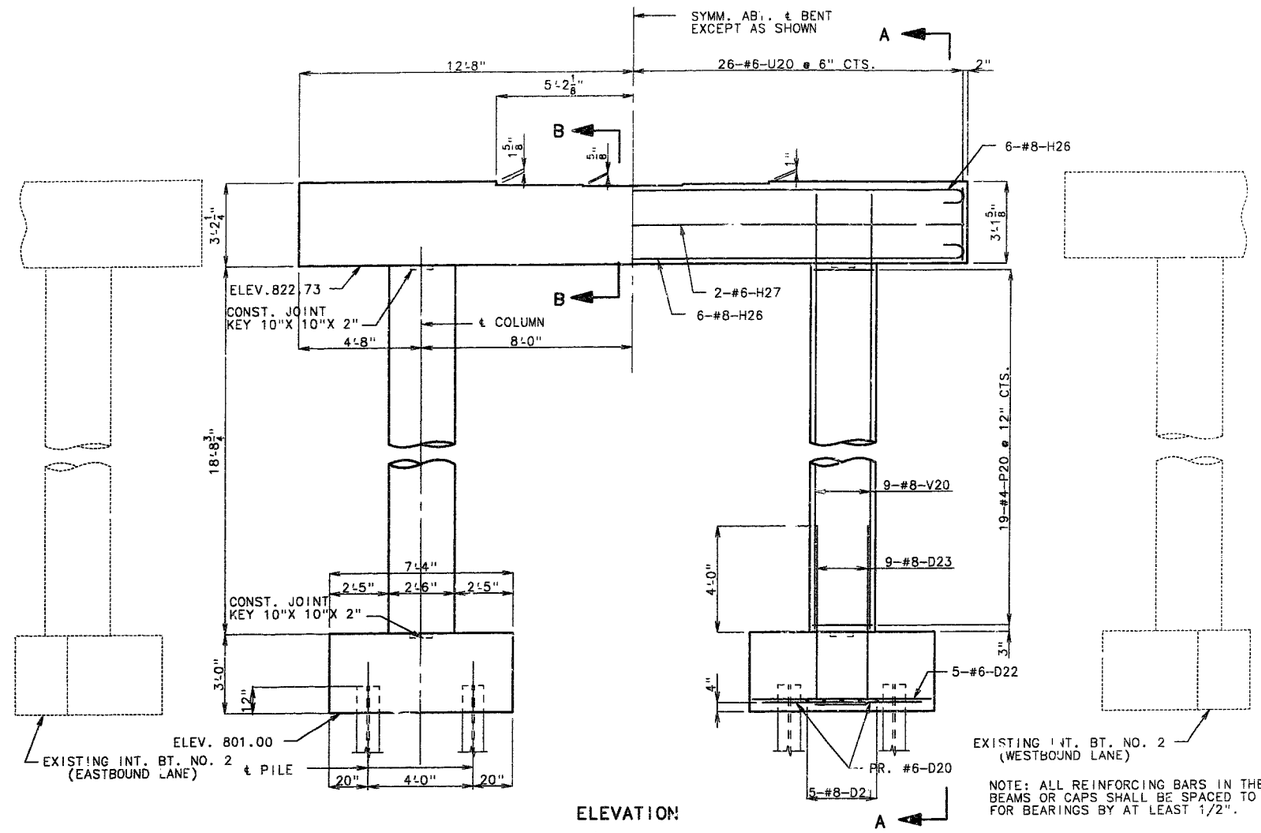

ELEVATION

NOTE: ALL REINFORCING BARS IN THE TOPS OF SUBSTRUCTURE BEAMS OR CAPS SHALL BE SPACED TO CLEAR ANCHOR BOLT WELLS FOR BEARINGS BY AT LEAST 1/2".

FOR DETAILS OF TYPE "D" BEARINGS, SEE SHEET NO. 26.

FOR DETAIL OF STEEL PILE SPLICE, SEE SHEET NO. 5.

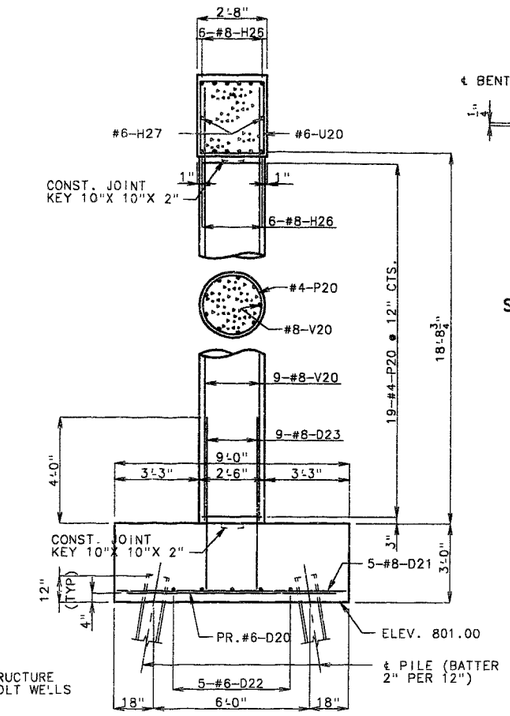

SECTION A-A

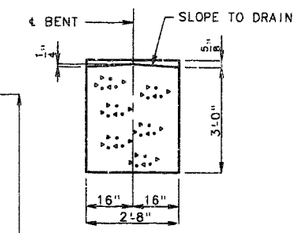

SECTION B-B

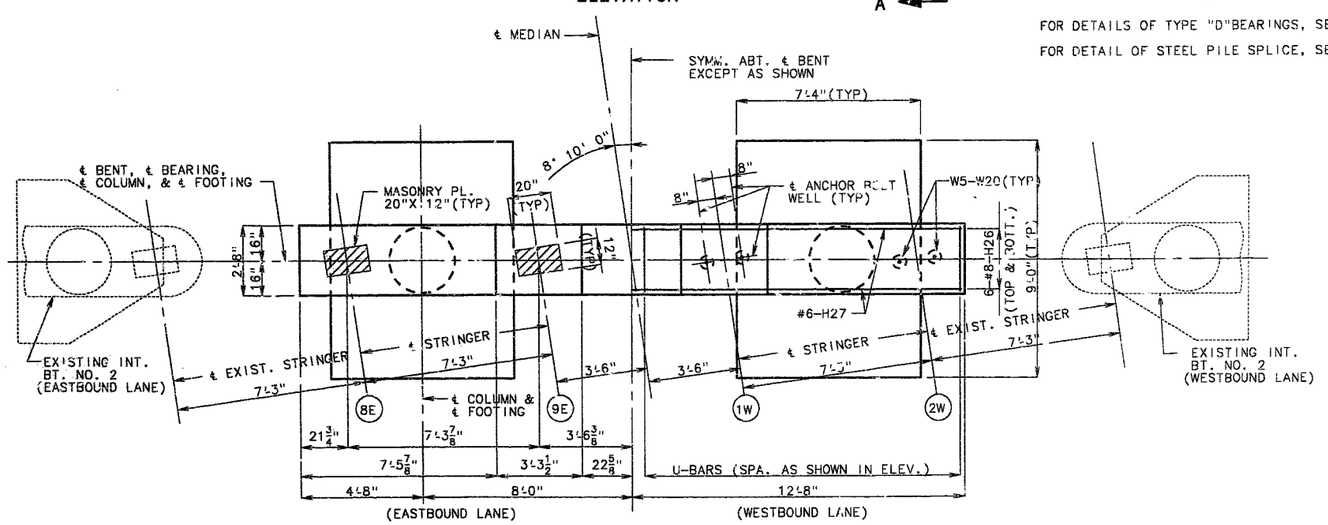

PLAN

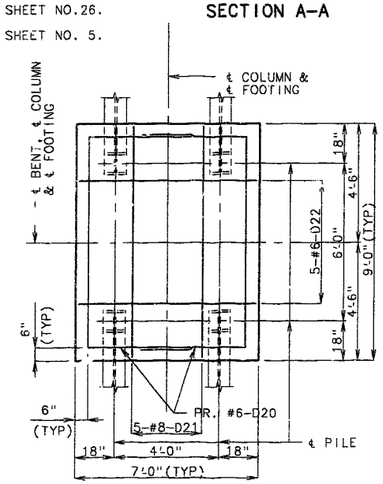

PLAN OF FOOTING

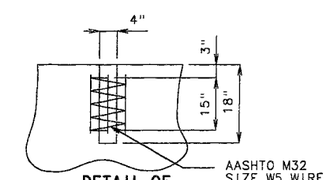

DETAIL OF ANCHOR BOLT WELLS

SUBSTRUCTURE QUANTITIES

ITEM		QUANTITY
CLASS 1 EXCAVATION	CU.YD.	90.0
STRUCT. STEEL PILE (10")	LIN.FT.	675
CLASS B CONC.(SUBSTR.)	CU.YD.	57.2
REINF. STEEL	LBS.	7,030

THESE QUANTITIES ARE INCLUDED IN THE ESTIMATED QUANTITIES TABLE ON SHEET NO. 2.

DETAILS OF INTERMEDIATE BENT NO. 2 (STAGE 1 CONSTRUCTION)

DETAILED OCT. 1992
CHECKED FEB. 1993

NOTE: THIS DRAWING IS NOT TO SCALE. FOLLOW DIMENSIONS.

SHEET NO. 8 OF 83.

JACKSON COUNTY

A-1427R1

247 262

STATE	PROJ. NO.	SHEET NO.
MO.	J4I0807	224

FINAL PLANS

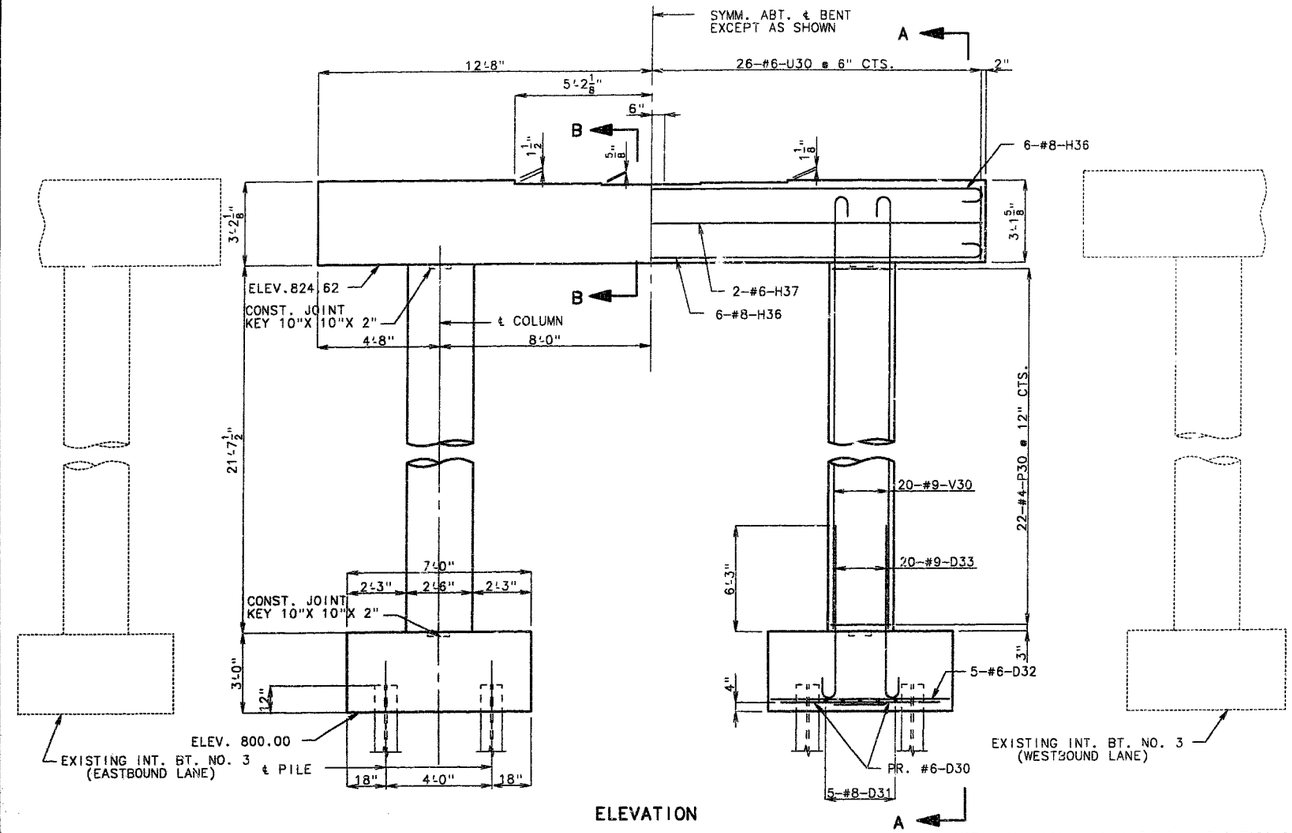

ELEVATION

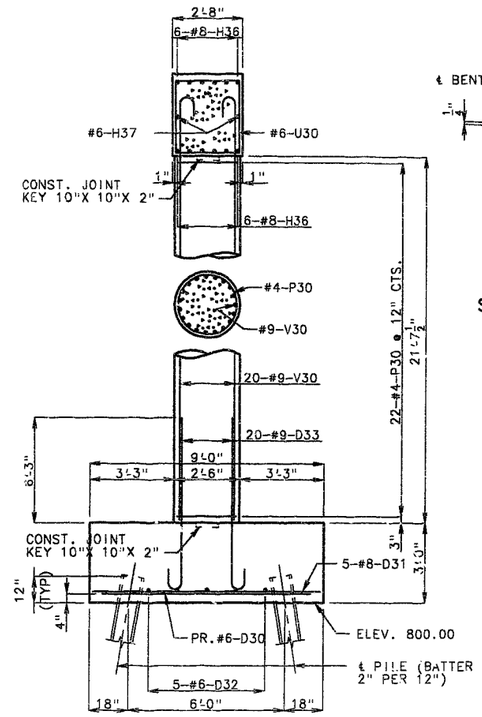

SECTION A-A

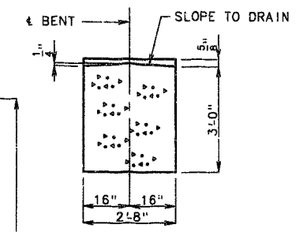

SECTION B-B

NOTE: ALL REINFORCING BARS IN THE TOPS OF SUBSTRUCTURE BEAMS OR CAPS SHALL BE SPACED TO CLEAR ANCHOR BOLT WELLS FOR BEARINGS BY AT LEAST 1/2".

FOR DETAILS OF ANCHOR BOLT WELL, SEE SHEET NO. 8.

FOR DETAILS OF TYPE "D"BEARINGS, SEE SHEET NO.26.

FOR DETAIL OF PILE SPLICE, SEE SHEET NO. 5.

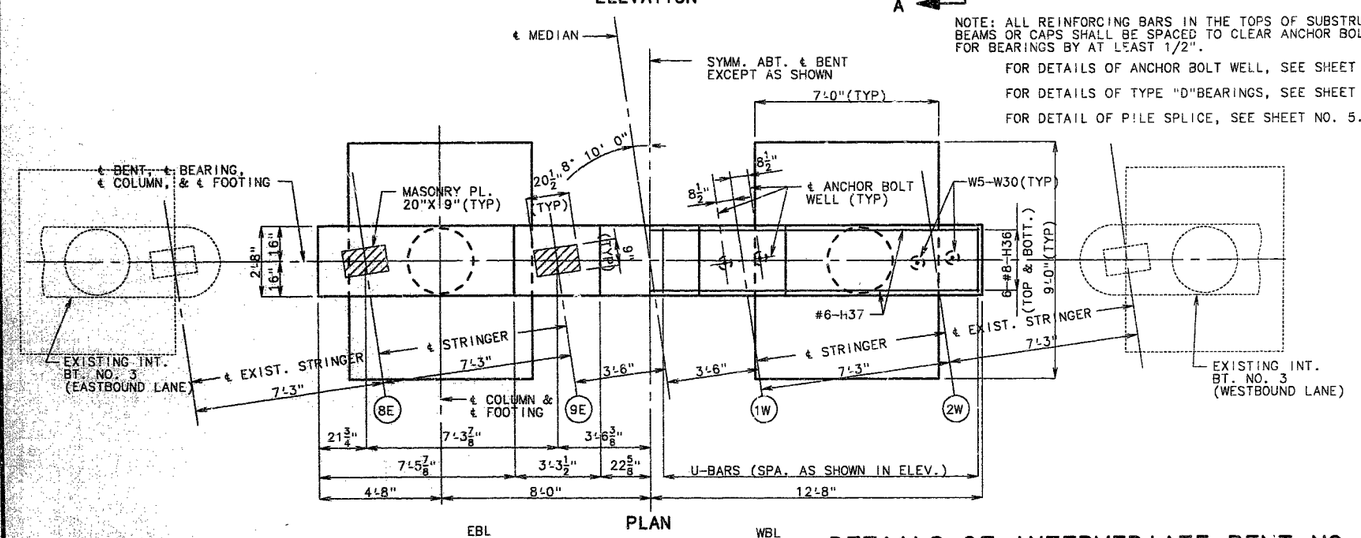

PLAN

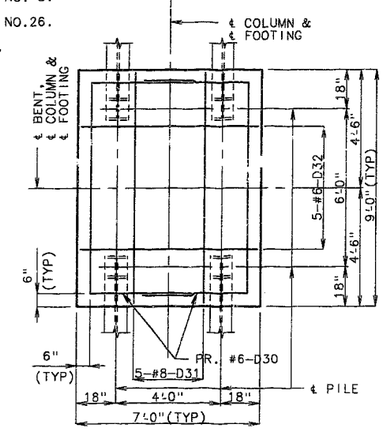

PLAN OF FOOTING

SUBSTRUCTURE QUANTITIES

ITEM		QUANTITY
CLASS 1 EXCAVATION	CU.YD.	119.0
STRUCT. STEEL PILE (10")	LIN.FT.	658
CLASS B CONC.(SUBSTR.)	CU.YD.	58.5
REINF. STEEL	LBS.	14,310

THESE QUANTITIES ARE INCLUDED IN THE ESTIMATED QUANTITIES TABLE ON SHEET NO. 2.

DETAILS OF INTERMEDIATE BENT NO. 3 (STAGE 1 CONSTRUCTION)

DETAILED NOV. 1992
CHECKED MAR. 1993

NOTE: THIS DRAWING IS NOT TO SCALE. FOLLOW DIMENSIONS.

SHEET NO. 10 OF 63.

JACKSON COUNTY

A-1427R1

249363

STATE	PROJ. NO.	SHEET NO.
MO.	3HI0807	227

FINAL PLANS

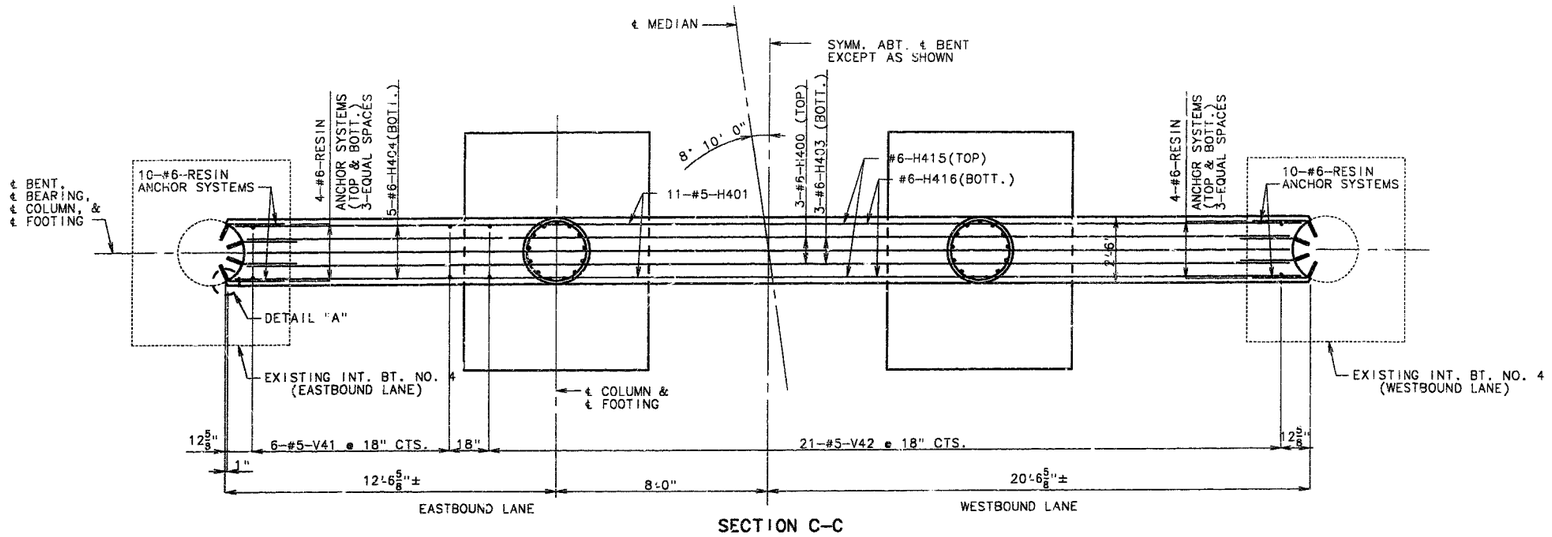

SECTION C-C

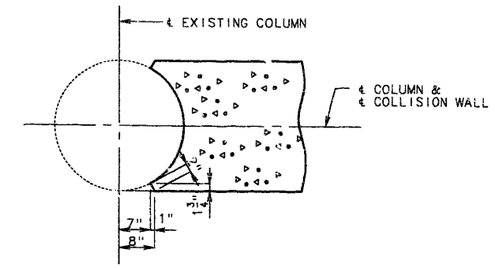

DETAIL "A"

NOTE: FOR LOCATION OF SECTION C-C SEE SHEET NO.13.

SUBSTRUCTURE QUANTITIES		
ITEM		QUANTITY
CLASS 1 EXCAVATION	CU.YD.	205.0
STRUCT. STEEL PILE (10")	LIN.FT.	678
CLASS B CONC.(SUBSTR.)	CU.YD.	215.5
REINF. STEEL	LBS.	19,800

THESE QUANTITIES ARE INCLUDED IN THE ESTIMATED QUANTITIES TABLE ON SHEET NO. 2.

DETAILS OF INTERMEDIATE BENT NO. 4 (STAGE 1 CONSTRUCTION)

DETAILED NOV. 1992
CHECKED APR. 1993

NOTE: THIS DRAWING IS NOT TO SCALE. FOLLOW DIMENSIONS.

JACKSON COUNTY A-1427R1

STATE	PROJ. NO.	SHEET NO.
MO.	J4I0807	232

FINAL PLANS

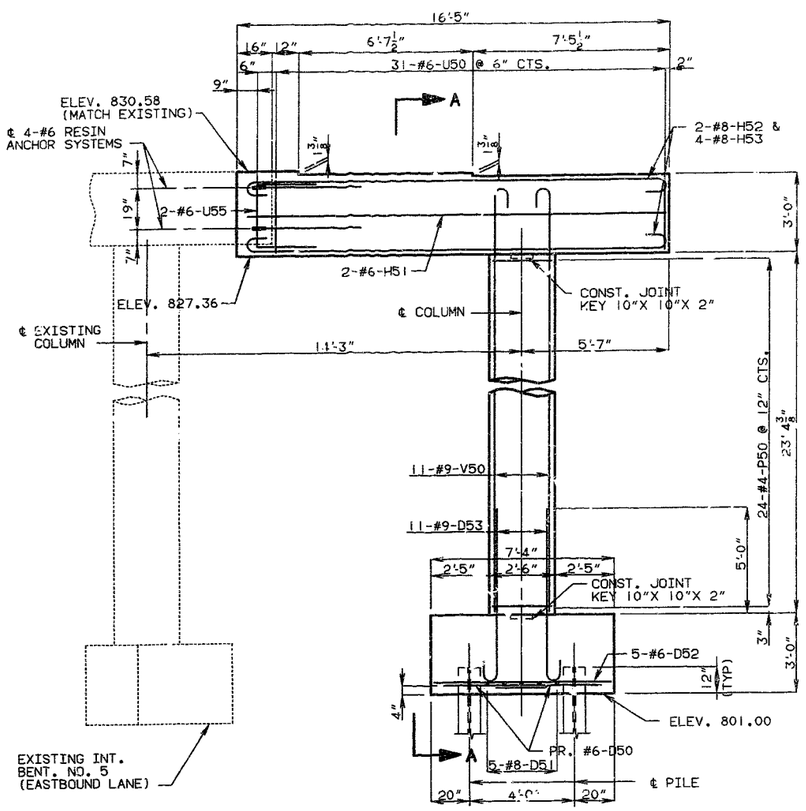

ELEVATION (EASTBOUND LANE)

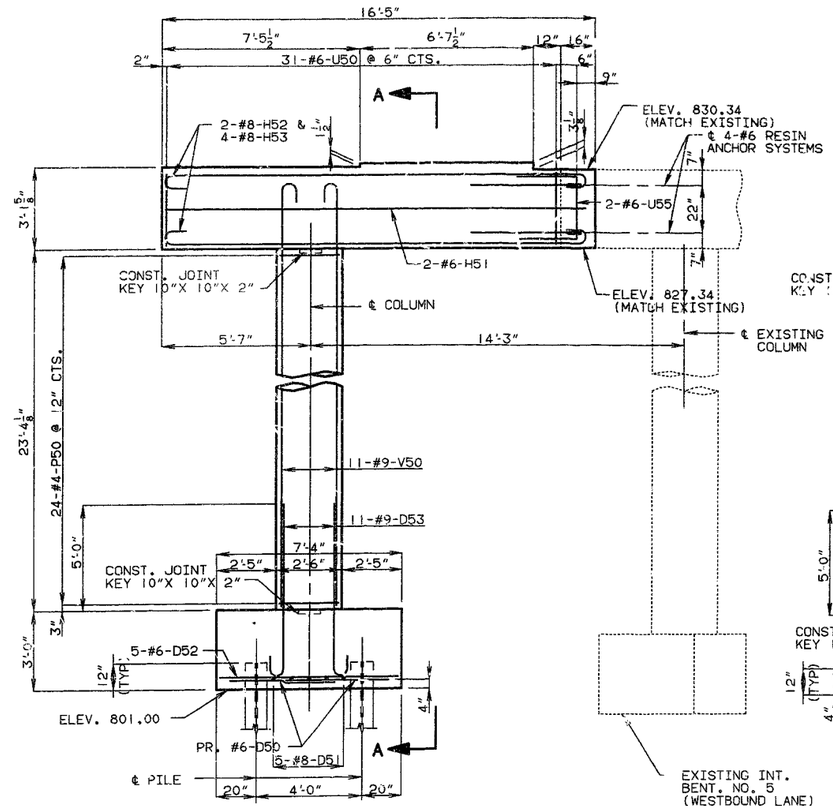

ELEVATION (WESTBOUND LANE)

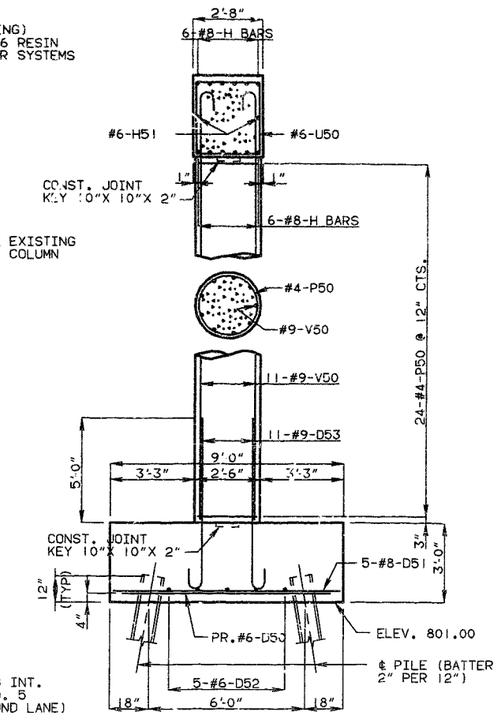

SECTION A-A

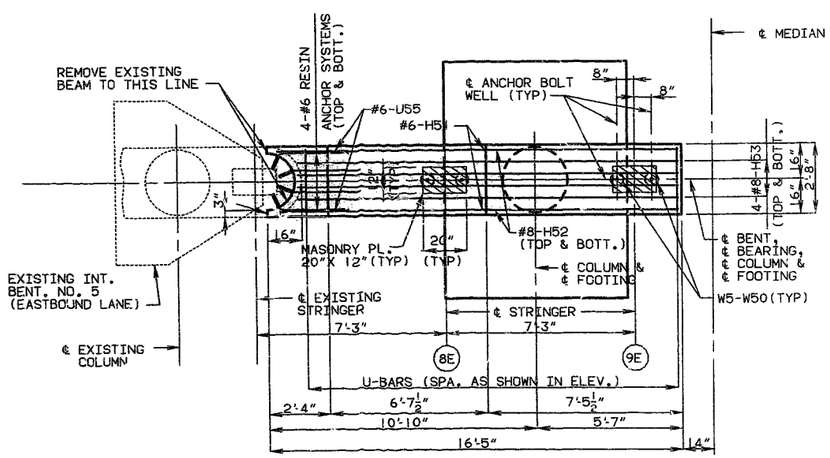

PLAN (EASTBOUND LANE)

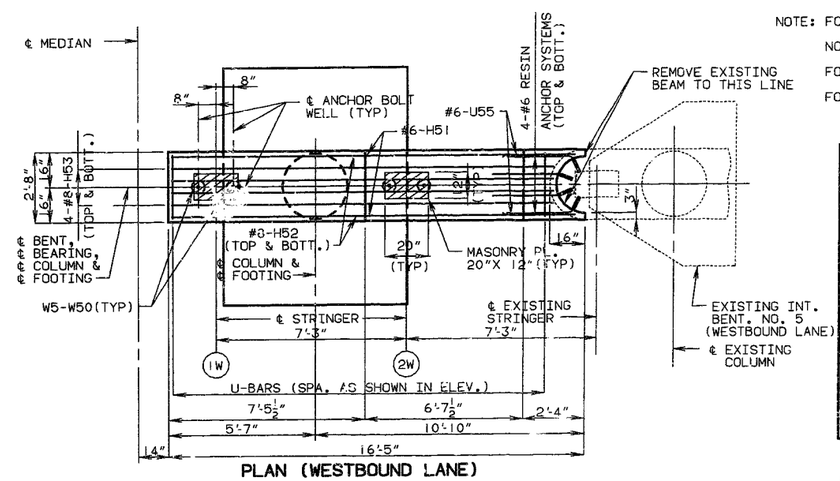

PLAN (WESTBOUND LANE)

NOTE: FOR PLAN OF FOOTING SEE SHEET NO. 19.
NOTE FOR DETAIL OF ANCHOR BOLT WELL SEE SHEET NO. 8.
FOR DETAILS OF TYPE "D" BEARINGS SEE SHEET NO. 26.
FOR DETAIL OF STEEL PILE SPLICE SEE SHEET NO. 5.

SUBSTRUCTURE QUANTITIES

ITEM		QUANTITY
CLASS I EXCAVATION	CU.YD.	153.5
STRUCT. STEEL PILE (10")	LIN.FT.	397
CLASS B CONC.(SUBSTR.)	CU.YD.	77.8
REINF. STEEL	LBS.	11,590

THESE QUANTITIES ARE INCLUDED IN THE ESTIMATED QUANTITIES TABLE ON SHEET NO. 2.

NOTE: ALL REINFORCING BARS IN THE TOPS OF SUBSTRUCTURE BEAMS OR CAPS SHALL BE SPACED TO CLEAR ANCHOR BOLT WELLS FOR BEARINGS BY AT LEAST 1/2".

NOTE: THIS DRAWING IS NOT TO SCALE. FOLLOW DIMENSIONS.

DETAILS OF INTERMEDIATE BENT NO. 5 (STAGE I CONSTRUCTION)

SHEET NO. 18 OF 63.

DETAILED NOV. 1992
CHECKED APR. 1993

JACKSON COUNTY

A-1427R1

357 265

STATE	PROJ. NO.	SHEET NO.
MO.	J4I0807	236

FINAL PLANS

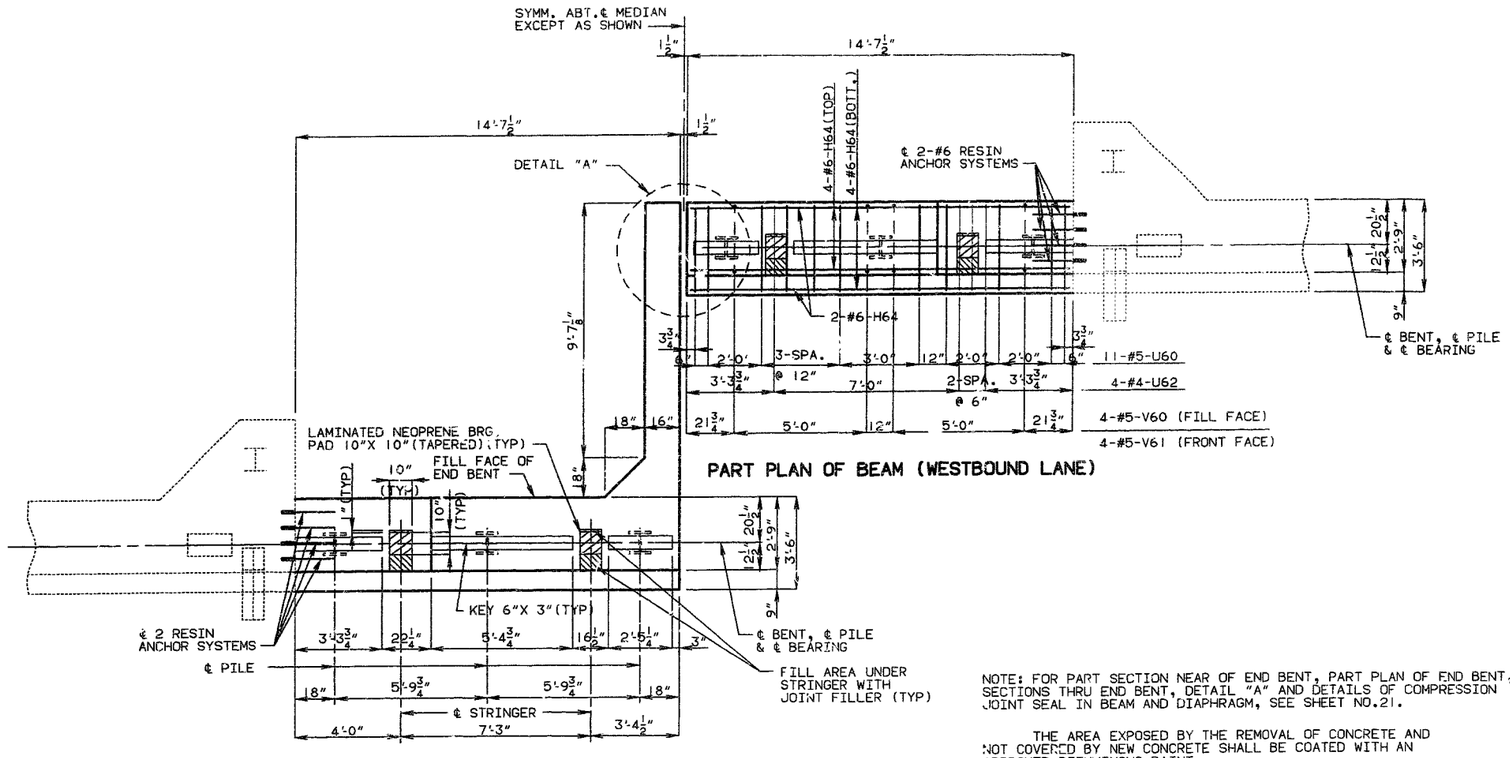

PART PLAN OF BEAM (WESTBOUND LANE)

PART PLAN OF BEAM (EASTBOUND LANE)

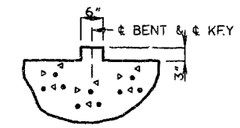

SECTION THRU KEY

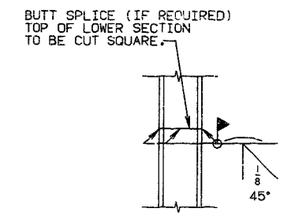

DETAIL OF STEEL PILE SPLICE

NOTE: FOR PART SECTION NEAR OF END BENT, PART PLAN OF END BENT, SECTIONS THRU END BENT, DETAIL "A" AND DETAILS OF COMPRESSION JOINT SEAL IN BEAM AND DIAPHRAGM, SEE SHEET NO.21.

THE AREA EXPOSED BY THE REMOVAL OF CONCRETE AND NOT COVERED BY NEW CONCRETE SHALL BE COATED WITH AN APPROVED BITUMINOUS PAINT.

SUBSTRUCTURE QUANTITIES

ITEM		QUANTITY
CLASS I EXCAVATION	CU.YD.	32.5
STRUCT. STEEL PILE (10")	LIN.FT.	385
CLASS B CONC.(SUBSTR.)	CU.YD.	25.8

THESE QUANTITIES ARE INCLUDED IN THE ESTIMATED QUANTITIES TABLE ON SHEET NO. 2.

DETAILED SEPT. 1992
CHECKED MAR. 1993

DETAILS OF END BENT NO. 6 (STAGE I CONSTRUCTION)

NOTE: THIS DRAWING IS NOT TO SCALE. FOLLOW DIMENSIONS.

JACKSON COUNTY A-1427R1

236

STATE	PROJ. NO.	SHEET NO.
MO.	J4I0807	241

FINAL PLANS

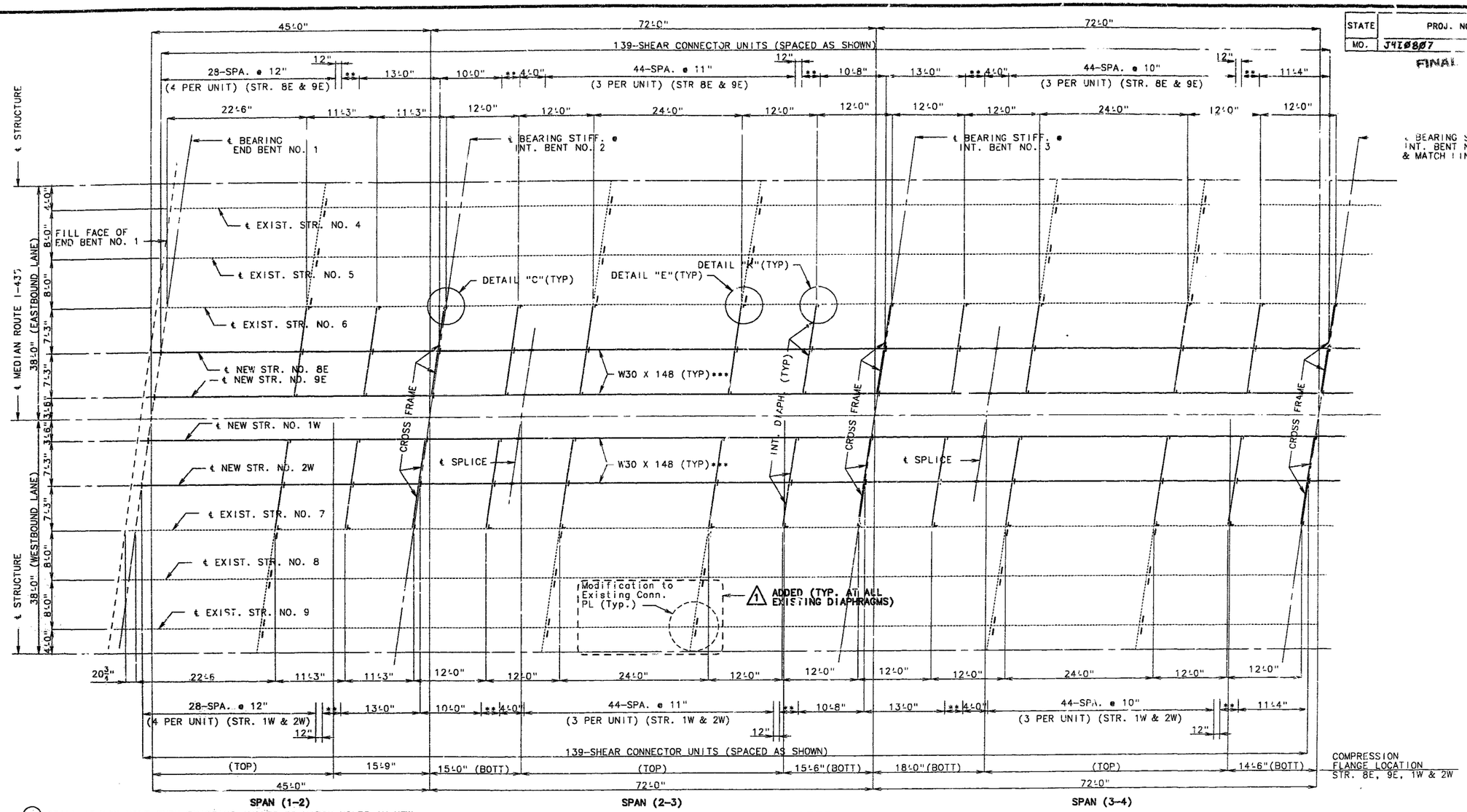

1 DRILL 13/16" HOLE THRU EXISTING ANGLES TO MATCH HOLES IN NEW STEEL. TIGHTEN BOLTS TO SNUG FIT BEFORE SLAB IS POURED, TORQUE AFTER SLAB IS POURED. EXISTING HOLES MAY BE USED WHERE POSSIBLE.

COST OF DRILLING HOLES IN EXISTING STRUCTURAL STEEL SHALL BE INCLUDED IN UNIT PRICE BID FOR STRUCTURAL CARBON STEEL.

PLAN OF STRUCTURAL STEEL (STAGE 1 CONSTRUCTION)

NOTE: DIMENSIONS SHOWN ARE HORIZONTAL DIMENSIONS AT BOTTOM OF BOTTOM FLANGE.

NOTE: INTERMEDIATE DIAPHRAGMS AND CROSS FRAMES SHALL BE PLACED AS SHOWN IN PLAN OF STRUCTURAL STEEL.

FOR DETAILS OF MODIFICATIONS TO EXISTING CONN. PLATES SEE DETAILS "L" & "J" ON SHEET NO. 32.

1 ADDED

** 3-SPA. @ 12" (4 PER UNIT)

*** NOTCH TOUGHNESS IS REQUIRED FOR ALL WIDE FLANGE BEAMS.

NOTE: FOR PLACEMENT OF SHEAR CONNECTORS ON ALL STRINGERS SEE SHEET NO.32.

FOR LOCATION OF SLAB DRAINS SEE SHEET NO.45.

FOR DETAILS OF DIAPHRAGMS AND CROSS FRAMES SEE SHEET NO.31.

FOR DETAILS "C", "E" & "K" SEE SHEET NO.32.

ALL FABRICATED STRUCTURAL STEEL SHALL BE A36, EXCEPT WIDE FLANGE BEAMS SHALL BE A572.

1 REVISED: MAY 12, 1994

DETAILED MAR. 1993
CHECKED APR. 1993

NOTE: THIS DRAWING IS NOT TO SCALE. FOLLOW DIMENSIONS.

SHEET NO. 27 OF 63.

JACKSON COUNTY

A-1427R1

367

STATE	PROJ. NO.	SHEET NO.
MO.	J4I0807	242

FINAL PLANS

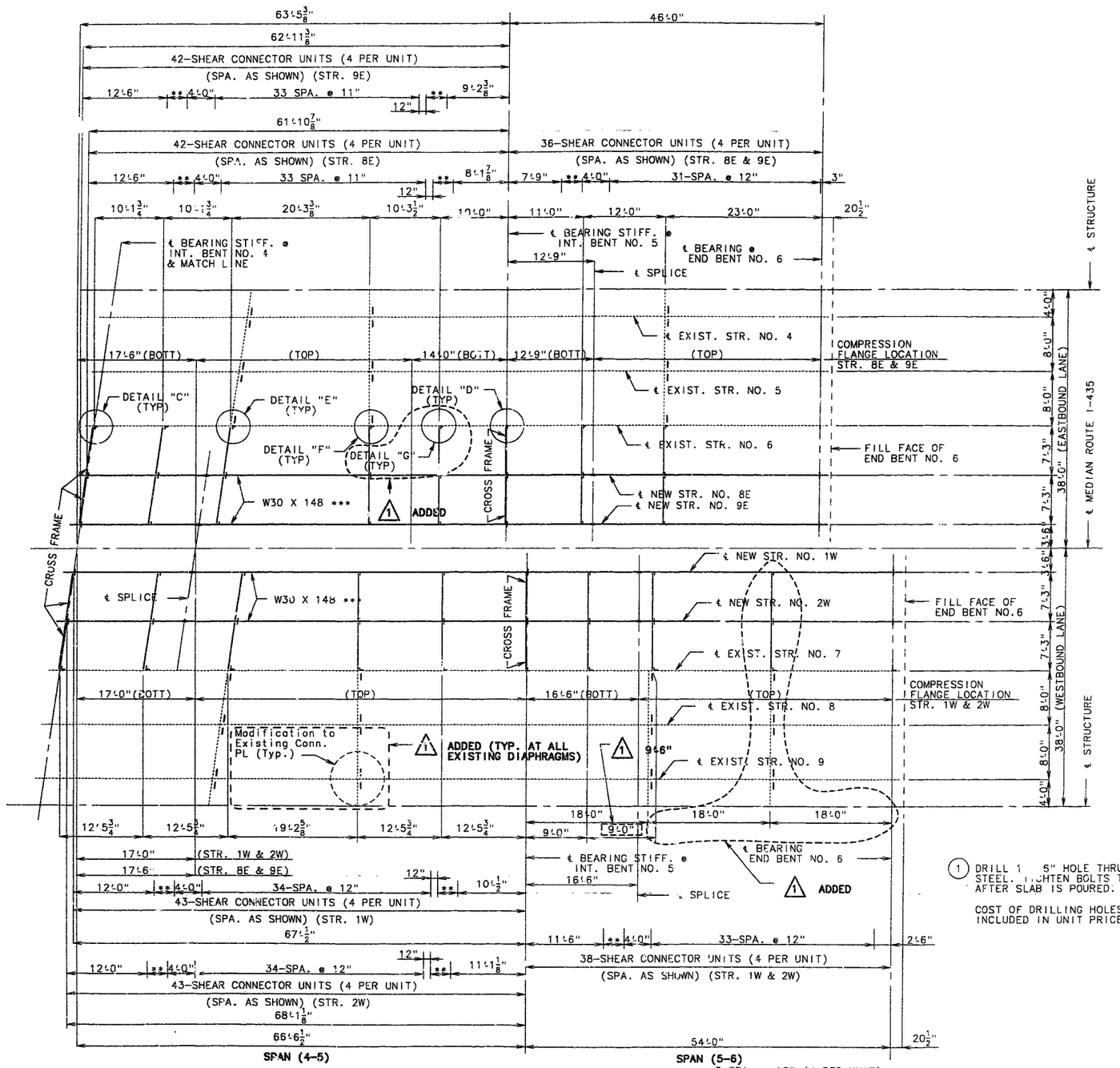

NOTE: INTERMEDIATE DIAPHRAGMS AND CROSS FRAMES SHALL BE PLACED AS SHOWN IN PLAN OF STRUCTURAL STEEL.

FOR DETAILS OF MODIFICATIONS TO EXISTING CONN. PLATES SEE DETAILS "L" & "J" ON SHEET NO. 32. — 1 ADDED

(1) DRILL 1 5" HOLE THRU EXISTING ANGLES TO MATCH HOLES IN NEW STEEL. TIGHTEN BOLTS TO SNUG FIT BEFORE SLAB IS POURED. TORQUE AFTER SLAB IS POURED. EXISTING HOLES MAY BE USED WHERE POSSIBLE.

COST OF DRILLING HOLES IN EXISTING STRUCTURAL STEEL SHALL BE INCLUDED IN UNIT PRICE BID FOR STRUCTURAL CARBON STEEL.

* LEGS OF NEW 4 X 4 X 3/8 ANGLES AND BENT PLATES SHALL BE TURNED OPPOSITE TO LEGS OF EXISTING ADJACENT ANGLES.

PLAN OF STRUCTURAL STEEL (STAGE 1 CONSTRUCTION)

** 3-SPA. @ 12" (4 PER UNIT)

*** NOTCH TOUGHNESS IS REQUIRED FOR ALL WIDE FLANGE BEAMS.

NOTE: FOR PLACEMENT OF SHEAR CONNECTORS ON ALL STRINGERS SEE SHEET NO.32.

FOR LOCATION OF SLAB DRAINS SEE SHEET NO.45.

FOR DETAILS OF DIAPHRAGMS AND CROSS FRAMES SEE SHEET NO.31.

FOR DETAILS "C", "D", "E" & "F" SEE SHEET NO.32.

ALL FABRICATED STRUCTURAL STEEL SHALL BE A36, EXCEPT WIDE FLANGE BEAMS SHALL BE A572.

NOTE: DIMENSIONS SHOWN ARE HORIZONTAL DIMENSIONS AT BOTTOM OF BOTTOM FLANGE.

NOTE: THIS DRAWING IS NOT TO SCALE. FOLLOW DIMENSIONS.

1 REVISED: MAY 12, 1994

DETAILED MAR. 1993
CHECKED APR. 1993

SHEET NO. 28 OF 63.

JACKSON COUNTY

A-1427R1

268

STATE	PROJ. NO.	SHEET NO.
MO.	J4I0807	243

FINAL PLANS

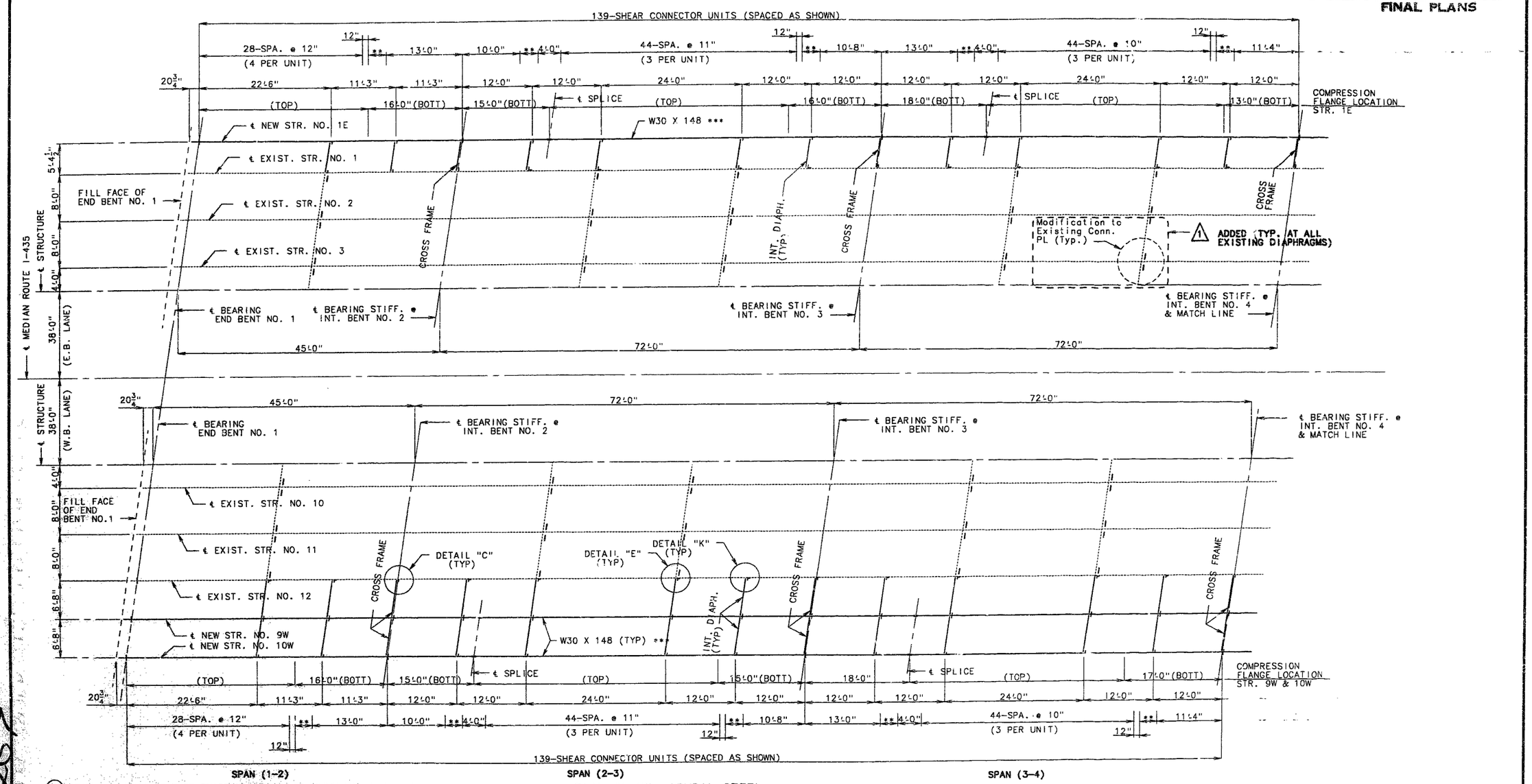

1 DRILL 13/16" HOLE THRU EXISTING ANGLES TO MATCH HOLES IN NEW STEEL. TIGHTEN BOLTS TO SNUG FIT BEFORE SLAB IS POURED, TORQUE AFTER SLAB IS POURED. EXISTING HOLES MAY BE USED WHERE POSSIBLE.

COST OF DRILLING HOLES IN EXISTING STRUCTURAL STEEL SHALL BE INCLUDED IN UNIT PRICE BID FOR STRUCTURAL CARBON STEEL.

NOTE: INTERMEDIATE DIAPHRAGMS AND CROSS FRAMES SHALL BE PLACED AS SHOWN IN PLAN OF STRUCTURAL STEEL.

FOR DETAILS OF MODIFICATIONS TO EXISTING CONN. PLATES SEE DETAILS "L" & "J" ON SHEET NO. 32.

1 ADDED

PLAN OF STRUCTURAL STEEL (STAGE 2 CONSTRUCTION)

NOTE: DIMENSIONS SHOWN ARE HORIZONTAL DIMENSIONS AT BOTTOM OF BOTTOM FLANGE.

** 3-SPA. @ 12" (4 PER UNIT)

*** NOTCH TOUGHNESS IS REQUIRED FOR ALL WIDE FLANGE BEAMS.

NOTE: FOR PLACEMENT OF SHEAR CONNECTORS ON ALL STRINGERS SEE SHEET NO.32.

FOR LOCATION OF SLAB DRAINS SEE SHEET NO.45.

FOR DETAILS OF DIAPHRAGMS AND CROSS FRAMES SEE SHEET NO.31.

FOR DETAIL "E" SEE SHEET NO.32.

ALL FABRICATED STRUCTURAL STEEL SHALL BE A36, EXCEPT WIDE FLANGE BEAMS SHALL BE A572.

1 REVISED: MAY 12, 1994

DETAILED MAR. 1993
CHECKED APR. 1993

NOTE: THIS DRAWING IS NOT TO SCALE. FOLLOW DIMENSIONS.

SHEET NO. 29 OF 63.

JACKSON COUNTY

A-1427R1

269

STATE	PROJ. NO.	SHEET NO.
MO.	J4I0807	244

FINAL PLANS

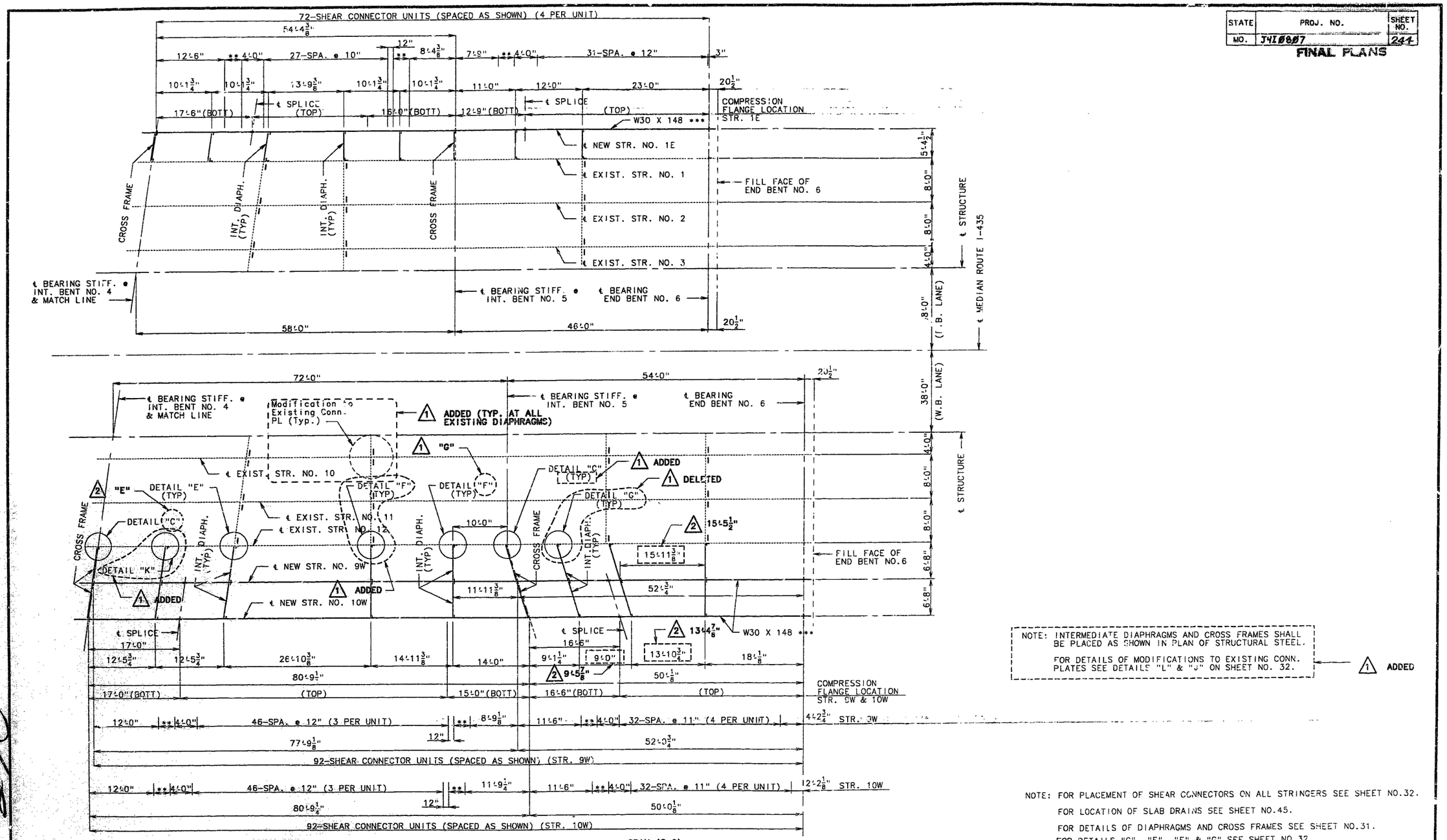

NOTE: INTERMEDIATE DIAPHRAGMS AND CROSS FRAMES SHALL BE PLACED AS SHOWN IN PLAN OF STRUCTURAL STEEL.

FOR DETAILS OF MODIFICATIONS TO EXISTING CONN. PLATES SEE DETAILS "L" & "J" ON SHEET NO. 32. ← 1 ADDED

NOTE: FOR PLACEMENT OF SHEAR CONNECTORS ON ALL STRINGERS SEE SHEET NO.32.

FOR LOCATION OF SLAB DRAINS SEE SHEET NO.45.

FOR DETAILS OF DIAPHRAGMS AND CROSS FRAMES SEE SHEET NO.31.

FOR DETAILS "C", "E", "F" & "G" SEE SHEET NO.32.

ALL FABRICATED STRUCTURAL STEEL SHALL BE A36, EXCEPT WIDE FLANGE BEAMS SHALL BE A572.

(1) DRILL 13/16" HOLE THRU EXISTING ANGLES TO MATCH HOLES IN NEW STEEL. TIGHTEN BOLTS TO SNUG FIT BEFORE SLAB IS POURED, TORQUE AFTER SLAB IS POURED. EXISTING HOLES MAY BE USED WHERE POSSIBLE.

COST OF DRILLING HOLES IN EXISTING STRUCTURAL STEEL SHALL BE INCLUDED IN UNIT PRICE BID FOR STRUCTURAL CARBON STEEL.

DETAILED MAR. 1993
CHECKED APR. 1993

PLAN OF STRUCTURAL STEEL (STAGE 2 CONSTRUCTION)

** 3-SPA. @ 12" (4 PER UNIT)

*** NOTCH TOUGHNESS IS REQUIRED FOR ALL WIDE FLANGE BEAMS.

NOTE: DIMENSIONS SHOWN ARE HORIZONTAL DIMENSIONS AT BOTTOM OF BOTTOM FLANGE.

NOTE: THIS DRAWING IS NOT TO SCALE. FOLLOW DIMENSIONS.

1 REVISED: MAY 12, 1994 2 REVISED: JUNE 13, 1994

SHEET NO. 30 OF 63.

JACKSON COUNTY

A-1427R1

370

STATE	PROJ. NO.	SHEET NO.
MO.	J4I0807	247

FINAL PLANS

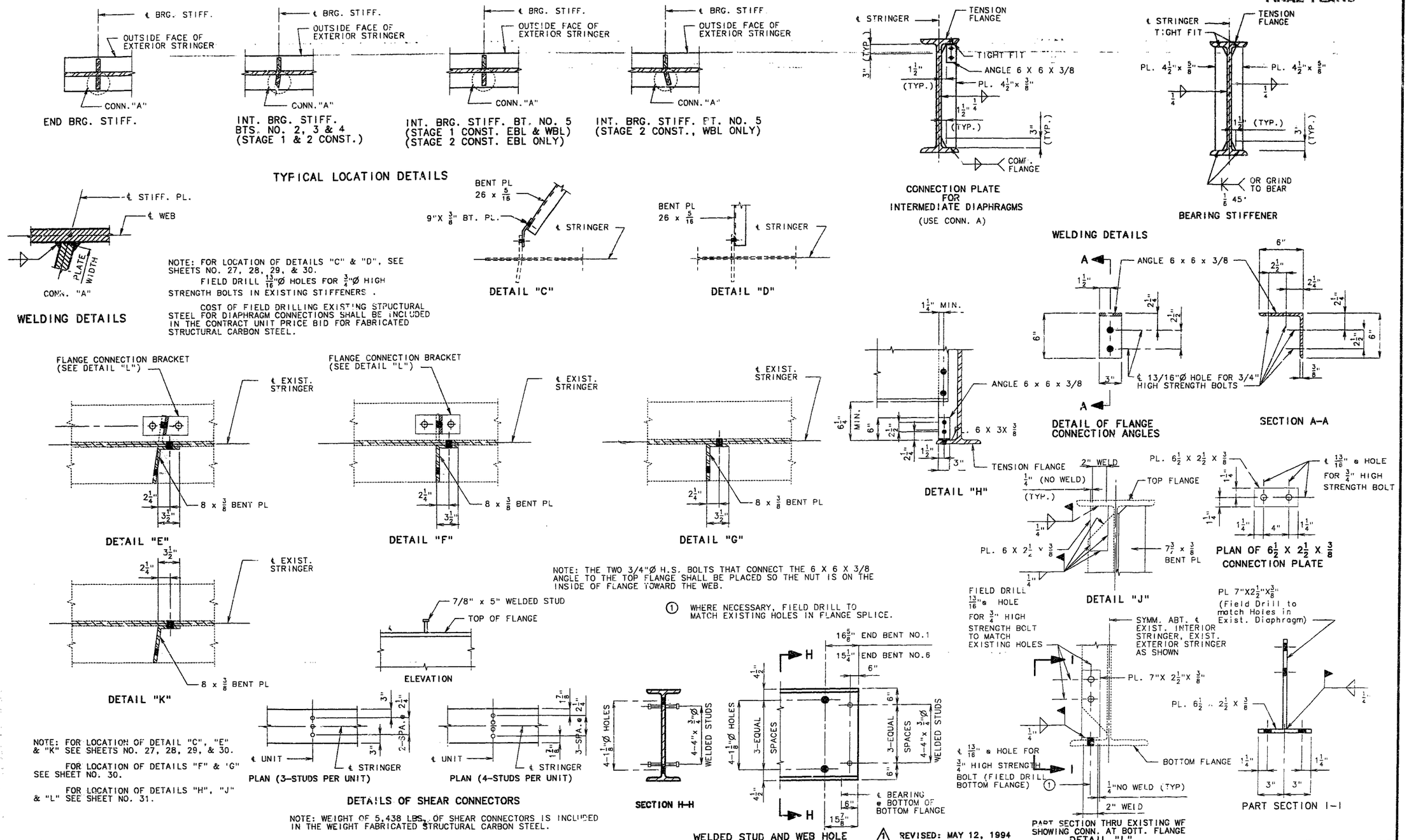

REVISED: MAY 12, 1994

DETAILED MAR. 1993
CHECKED APR. 1993

NOTE: THIS DRAWING IS NOT TO SCALE. FOLLOW DIMENSIONS.

SHEET NO. 32 OF 63.

JACKSON COUNTY

A-1427R1

321

STATE	PROJ. NO.	SHEET NO.
MO.	J4I0807	260

FINAL PLANS

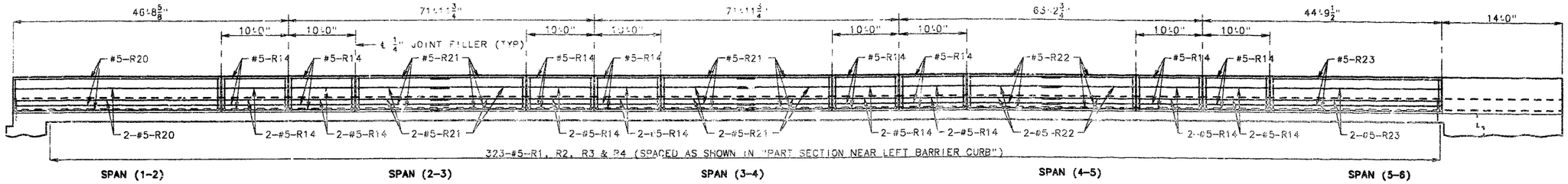

ELEVATION NEAR RIGHT BARRIER CURB (EASTBOUND LANE)

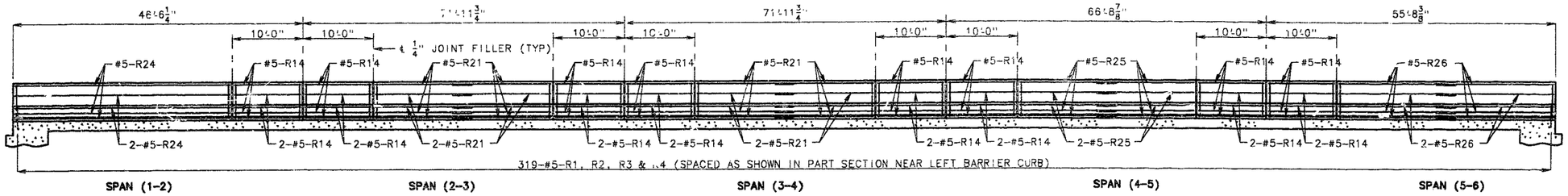

SECTION NEAR LEFT BARRIER CURB (WESTBOUND LANE)

NOTE: DIMENSIONS SHOWN ARE HORIZONTAL.

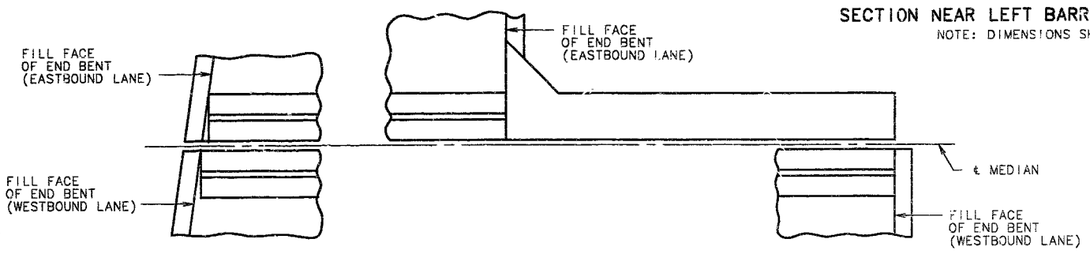

PART PLAN OF SAFETY BARRIER NEAR MEDIAN AT END BENTS

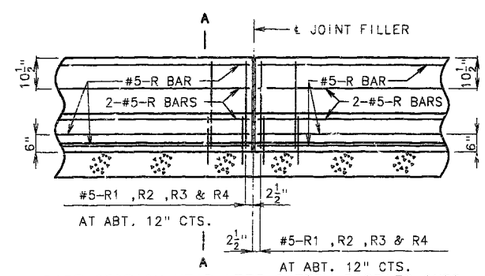

PART SECTION NEAR LEFT SAFETY BARRIER CURB (CAST-IN-PLACE CONVENTIONAL FORMING OPTION)

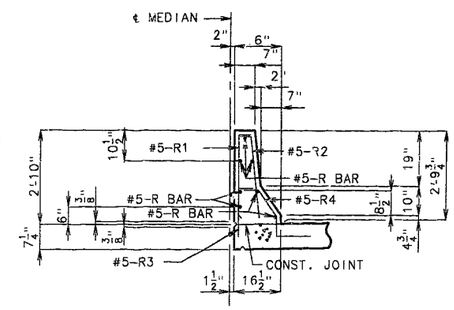

PART SECTION A-A

NOTE: USE A MINIMUM LAP OF 17" FOR #5 HORIZONTAL SAFETY BARRIER CURB BARS.
THE CROSS-SECTIONAL AREA ABOVE THE SLAB = 2.46 SQ. FT.

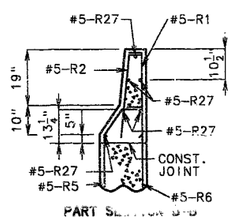

PART SECTION B-B

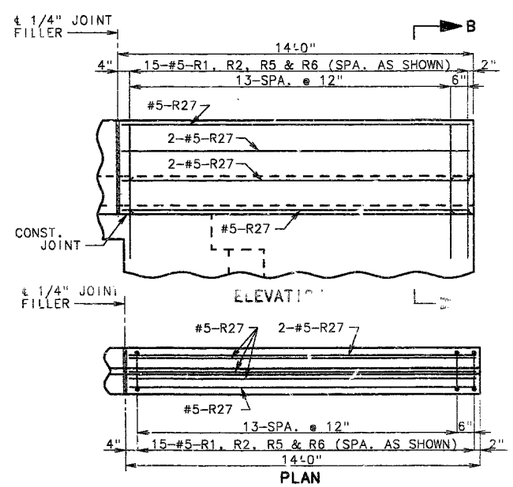

DETAILS OF SAFETY BARRIER CURB AT END BENT NO.6

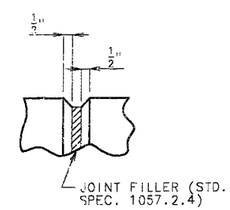

FILLED JOINT DETAIL

NOTE:

TOP OF SAFETY BARRIER CURB SHALL BE BUILT PARALLEL TO GRADE WITH SAFETY BARRIER CURB JOINTS (EXCEPT AT END BENTS) NORMAL TO GRADE.

ALL EXPOSED EDGES OF SAFETY BARRIER CURB SHALL HAVE EITHER A 1/2" RADIUS OR A 3/8" BEVEL, UNLESS OTHERWISE NOTED.

WHEN THE SAFETY BARRIER CURB IS BID BY LINEAR FEET, THE CONTRACT UNIT PRICE SHALL INCLUDE THE COST OF ALL CONCRETE AND REINFORCEMENT, COMPLETE-IN-PLACE.

CONCRETE IN THE SAFETY BARRIER CURB SHALL BE CLASS B1.

MEASUREMENT OF SAFETY BARRIER CURB IS TO THE NEAREST LINEAR FOOT FOR EACH STRUCTURE, MEASURED ALONG THE OUTSIDE TOP OF SLAB FROM FILL FACE TO FILL FACE.

DETAILS OF SAFETY BARRIER CURB (STAGE 1 CONSTRUCTION)

B/C EL16,GS 3.30, , ,A	
BARRIER CURB ELEVATION	REVISED:
JAN. 1990	FEB. 1991

DETAILED APR. 1993
CHECKED APR. 1993

NOTE: THIS DRAWING IS NOT TO SCALE. FOLLOW DIMENSIONS.

JACKSON COUNTY

A-1427R1

STATE	PROJ. NO.	SHEET NO.
MO.	J4I0807	261

FINAL PLANS

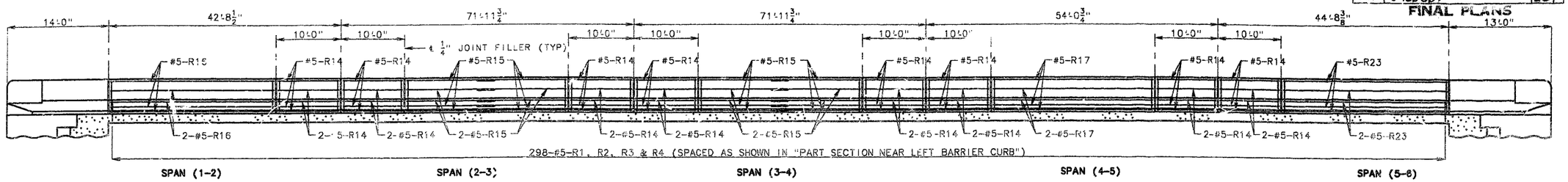

SECTION NEAR LEFT BARRIER CURB (EASTBOUND LANE)

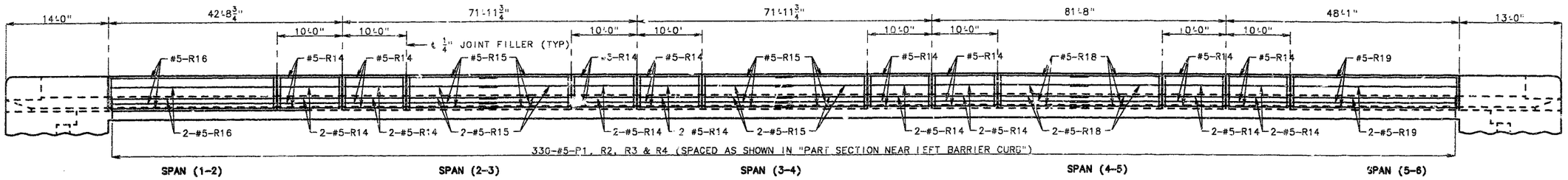

ELEVATION NEAR RIGHT BARRIER CURB (WESTBOUND LANE)

NOTE: DIMENSIONS SHOWN ARE HORIZONTAL.

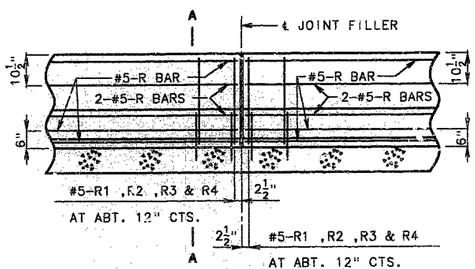

PART SECTION NEAR LEFT SAFETY BARRIER CURB (CAST-IN-PLACE CONVENTIONAL FORMING OPTION)

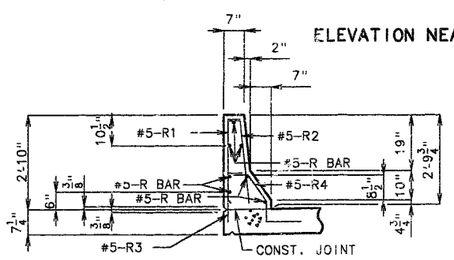

PART SECTION A-A

NOTE: USE A MINIMUM LAP OF 17" FOR #5 HORIZONTAL SAFETY BARRIER CURB BARS.
THE CROSS-SECTIONAL AREA ABOVE THE SLAB = 2.46 SQ. FT.

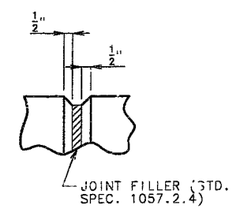

FILLED JOINT DETAIL

NOTE:

TOP OF SAFETY BARRIER CURB SHALL BE BUILT PARALLEL TO GRADE WITH SAFETY BARRIER CURB JOINTS (EXCEPT AT END POINTS) NORMAL TO GRADE.

ALL EXPOSED EDGES OF SAFETY BARRIER CURB SHALL HAVE EITHER A 1/2" RADIUS OR A 3/8" BEVEL, UNLESS OTHERWISE NOTED.

WHEN THE SAFETY BARRIER CURB IS BID BY LINEAR FEET, THE CONTRACT UNIT PRICE SHALL INCLUDE THE COST OF ALL CONCRETE AND REINFORCEMENT, COMPLETE-IN-PLACE.

CONCRETE IN THE SAFETY BARRIER CURB SHALL BE CLASS B1.

MEASUREMENT OF SAFETY BARRIER CURB IS TO THE NEAREST LINEAR FOOT FOR EACH STRUCTURE, MEASURED ALONG THE OUTSIDE TOP OF SLAB FROM END OF WING TO END OF WING.

FOR DETAILS OF RUSTICATION SEE SHEET NO. 48.

DETAILS OF SAFETY BARRIER CURB (STAGE 2 CONSTRUCTION)

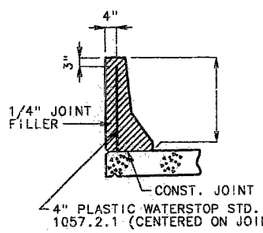

NOTE: PLASTIC WATERSTOP SHALL BE PLACED IN ALL SAFETY BARRIER CURB FILLED JOINTS. (EXCEPT STRUCTURES WITH SUPERELEVATION, USE ON ALL LOWER SAFETY BARRIER CURB JOINTS ONLY).

COST OF PLASTIC WATERSTOP COMPLETE IN PLACE TO BE INCLUDED IN CONTRACT UNIT PRICE FOR SAFETY BARRIER CURB.

DETAILS OF PLASTIC WATERSTOP

B/C EL16.GS
BARRIER CURB
JAN. 1990
REVISED
PRESENT

DETAILED APR. 1993
CHECKED APR. 1993

NOTE: THIS DRAWING IS NOT TO SCALE. FOLLOW DIMENSIONS.

JACKSON COUNTY

A-1427R1

STATE	PROJ. NO.	SHEET NO.
MO.	J4I0807	262

FINAL PLANS

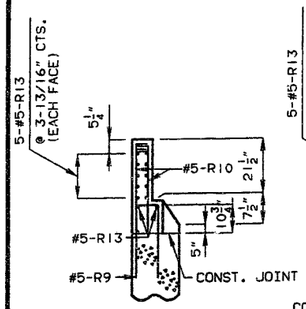

PART SECTION A-A

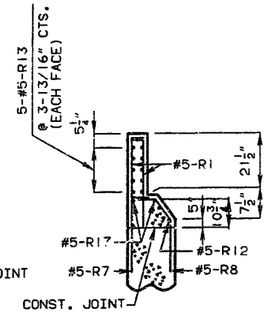

PART SECTION B-B

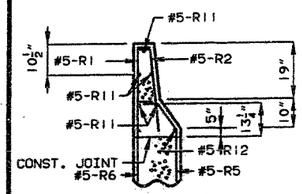

PART SECTION C-C

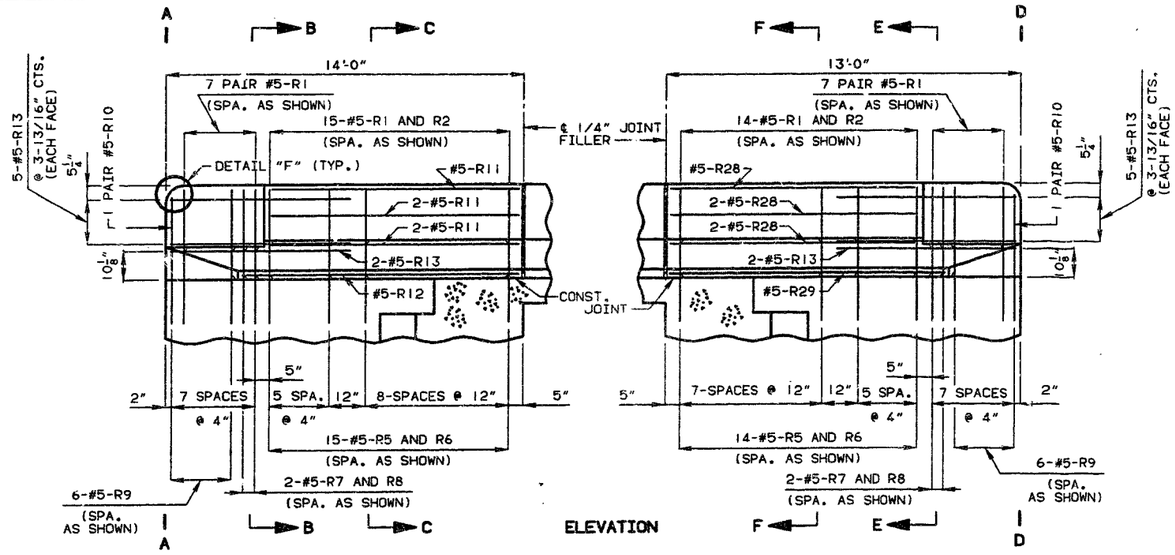

ELEVATION

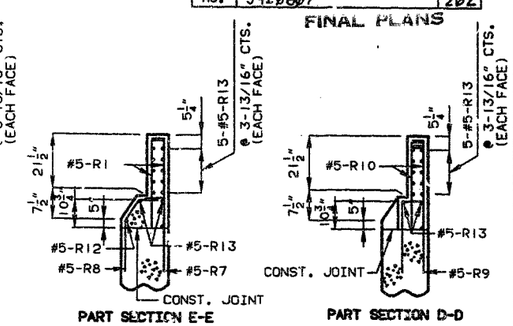

PART SECTION E-E

PART SECTION D-D

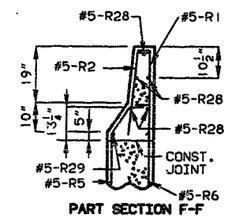

PART SECTION F-F

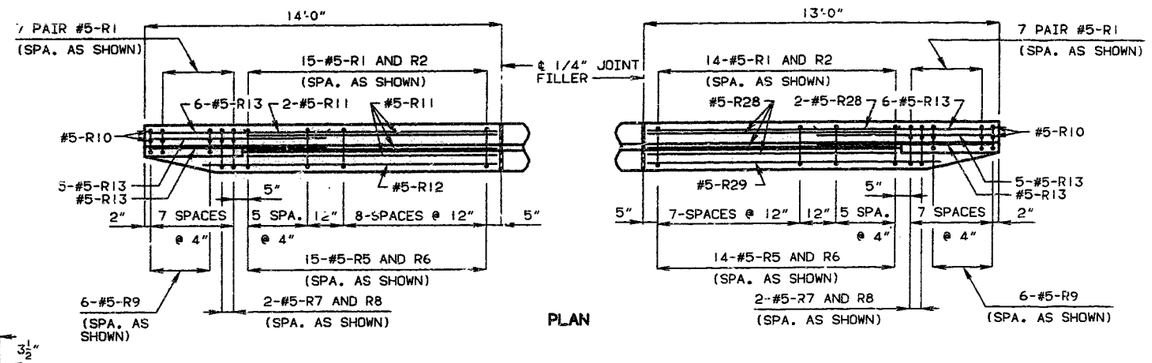

PLAN

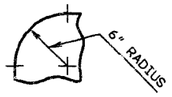

DETAIL "F" (TYPICAL)

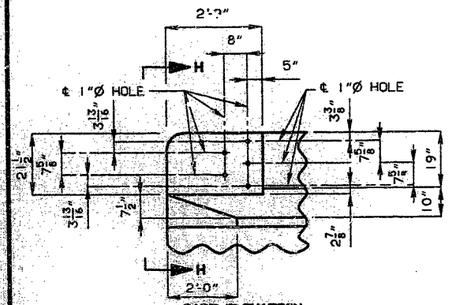

PART ELEVATION

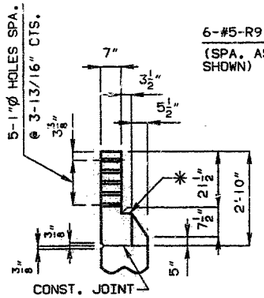

PART SECTION H-H

✱ SLOPE 1/4" TOWARD ROADWAY

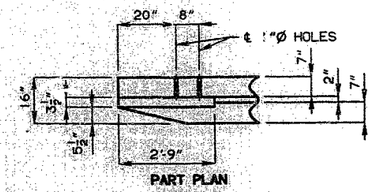

PART PLAN

DETAILS OF GUARD RAIL ATTACHMENT

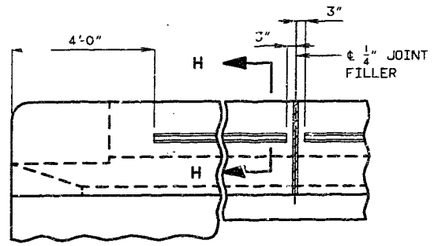

AT END OF WING AT JOINT FILLER

DETAILS OF RUSTICATION

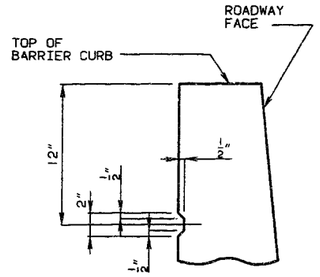

SECTION H-H

DETAILS OF SAFETY BARRIER CURB AT END BENTS
STAGE 2 CONSTRUCTION

DETAILED APR. 1993
CHECKED APR. 1993

NOTE: THIS DRAWING IS NOT TO SCALE. FOLLOW DIMENSIONS.

SHEET NO. 48 OF 63.

JACKSON COUNTY

A-1427R1

374 287

STATE	PROJ. NO.	SHEET NO.
MO.	J4I0807	263

FINAL PLANS

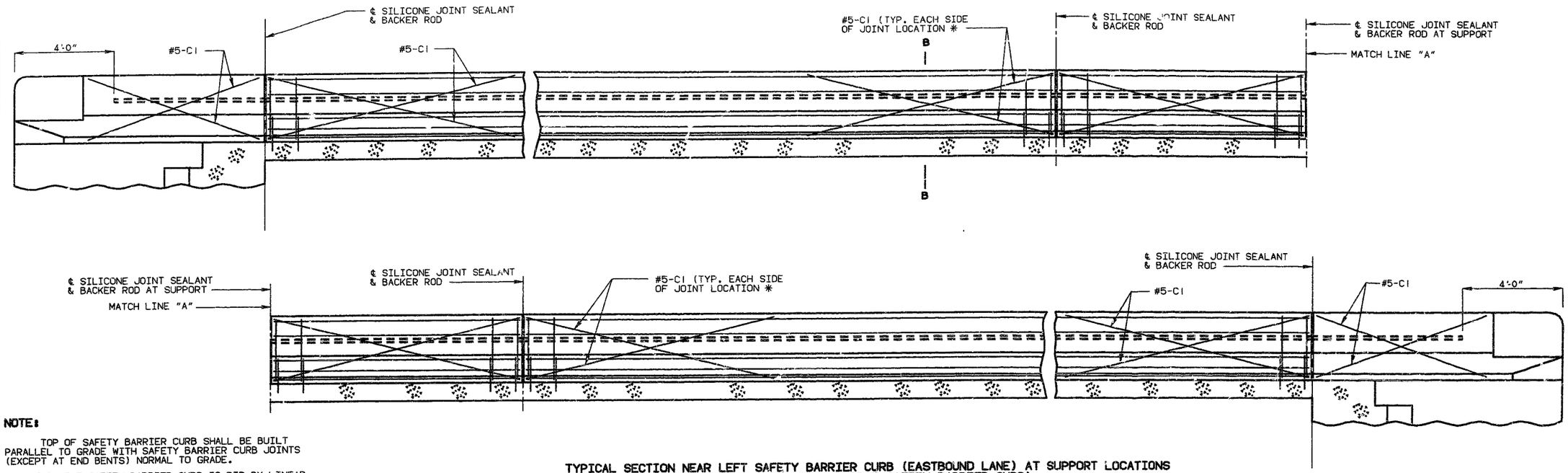

NOTE:

TOP OF SAFETY BARRIER CURB SHALL BE BUILT PARALLEL TO GRADE WITH SAFETY BARRIER CURB JOINTS (EXCEPT AT END BENTS) NORMAL TO GRADE.

WHEN THE SAFETY BARRIER CURB IS BID BY LINEAR FEET, THE CONTRACT UNIT PRICE SHALL INCLUDE THE COST OF ALL CONCRETE AND REINFORCEMENT, COMPLETE-IN-PLACE.

CONCRETE IN THE SAFETY BARRIER CURB SHALL BE CLASS B1.

MEASUREMENT OF SAFETY BARRIER CURB IS TO THE NEAREST LINEAR FOOT FOR EACH STRUCTURE, MEASURED ALONG THE OUTSIDE TOP OF SLAB FROM END OF WING TO END OF WING.

TYPICAL SECTION NEAR LEFT SAFETY BARRIER CURB (EASTBOUND LANE) AT SUPPORT LOCATIONS (OPTIONAL SLIP-FORM BRIDGE SAFETY BARRIER CURB) RIGHT SIDE (WESTBOUND LANE) SIMILAR

NOTE:

JOINT SEALANT AND BACKER RODS SHALL BE USED ON ALL SLIP-FORM BRIDGE SAFETY BARRIER CURBS INSTEAD OF JOINT FILLER.

PLASTIC WATERSTOP SHALL NOT BE USED WITH SLIP-FORM OPTION.

C BARS (SLIP-FORM OPTION ONLY) SHALL BE USED IN ADDITION TO CAST-IN-PLACE CONVENTIONAL FORMING REINFORCEMENT FOR BRIDGE SAFETY BARRIER CURB.

NOTE:

SECTION NEAR LEFT BARRIER CURB (WESTBOUND LANE) AT SUPPORT LOCATIONS AND RIGHT SIDE (EASTBOUND LANE) ARE SIMILAR EXCEPT THAT THE END POSTS SHALL BE OMITTED.

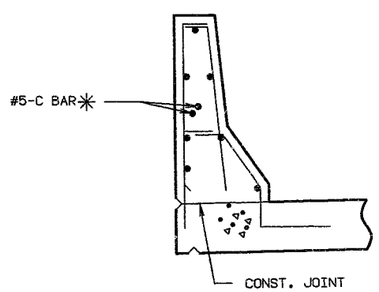

PART SECTION B-B

NOTE: ✳ EACH SIDE OF JOINT LOCATION.

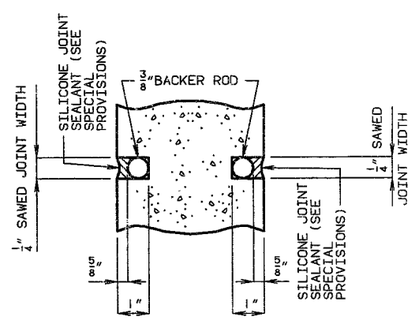

SECTION A-A

NOTE: COST OF SILICONE JOINT SEALANT AND BACKER ROD COMPLETE IN PLACE TO BE INCLUDED IN THE CONTRACT UNIT PRICE FOR SAFETY BARRIER CURB.

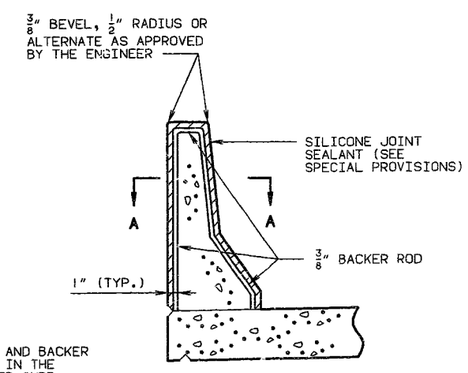

SECTION THRU JOINT

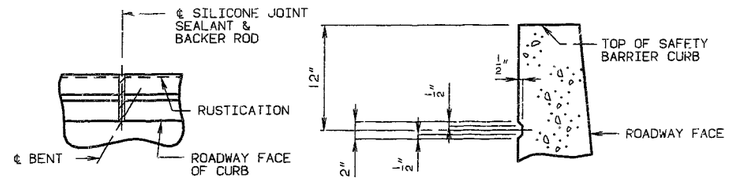

PART PLAN SHOWING SAFETY BARRIER CURB JOINT

PART SECTION SHOWING RUSTICATION DETAILS

RUSTICATION DETAIL

OPTIONAL SLIP-FORM BRIDGE SAFETY BARRIER CURB

B/C SF16,GS 3[illegible]
BARRIER CURB ELEVATION REVISED
FEB. 1991

DETAILED MAR. 1993
CHECKED APR. 1993

NOTE: THIS DRAWING IS NOT TO SCALE. FOLLOW DIMENSIONS.

JACKSON COUNTY

A-1427R1

FINAL PLANS

STATE	PROJ. NO.	SHEET NO.
MO.	J4I0007	264

BILL OF REINFORCING STEEL

NO. REQ'D.	MARK NO. (SIZE MARK)	LOCATION	EPOXY (E)	SHAPE NO.	STIRRUP (S)	SUBSTR. (X)	VARIES (V)	NO. EACH	B FT. IN.	C FT. IN.	D FT. IN.	E FT. IN.	F FT. IN.	H FT. IN.	K FT. IN.	NOMINAL LENGTH FT. IN.	ACTUAL LENGTH FT. IN.	WEIGHT LBS.
		SUBSTRUCTURE																
		INT.BT.NO.2																
4	6D20	FOOTING		10		X				4 1.000	6 6.000					14 10	14 6	87
20	8D21	FOOTING		20		X			5 9.000							8 9	8 9	437
10	6D22	FOOTING		20		X			6 9.000							6 9	6 9	101
36	8D23	FOOTING		20		X			6 8.000							6 8	6 8	641
4	6D24	FOOTING		10		X				4 3.000	8 0.000					16 6	16 2	97
10	6D25	FOOTING		20		X			7 1.000							7 1	7 1	106
6	8H20	BEAM		18		X			12 3.000							14 1	14 1	226
2	6H21	BEAM		20		X			14 3.000							14 3	14 3	43
2	8H22	BEAM		18		X			14 3.000							16 1	16 1	86
4	8H23	BEAM		18		X			13 3.000							15 4	15 4	164
4	8H24	BEAM		18		X			8 5.000							8 3	8 3	88
2	6H25	BEAM		20		X			6 5.000							6 5	6 5	19
12	8H26	BEAM		18		X			25 1.000							26 11	26 11	862
2	6H27	BEAM		20		X			25 1.000							25 1	25 1	75
8	8H28	BEAM		18		X			5 8.000							7 6	7 6	160
76	4P20	COLUMN		16		X			2 3.000							7 11	7 11	402
64	6U20	BEAM		13	S	X			2 5.000	2 9.000	2 5.000	2 9.000				11 8	11 2	1073
8	4U21	BEAM		10	S	X				6.000	2 5.000					3 5	3 3	17
2	6U22	BEAM		13	S	X			2 5.000	2 9.000	2 6.000	2 8.000				11 8	11 2	34
7	6U23	BEAM		13	S	X			2 5.000	3 0.750	2 5.000	3 0.750				12 4	11 10	124
2	6U24	BEAM		10	S	X				2 2.000	2 7.000					6 11	6 7	20
2	6U[illegible]	BEAM		10	S	X				2 2.000	3 0.750					7 5	7 1	21
27	8V20	COLUMN		20		X			21 3.000							21 3	21 3	532
9	8V21	COLUMN		20		X			21 11.000							21 11	21 11	527
14	W5W20	A.B.WELL		22		X			15.000	9.125						23 0	23 0	54
		INT.BT.NO.3																
8	6D30	FOOTING		10		X				4 1.000	8 0.000					16 2	15 10	190
20	8D31	FOOTING		20		X			8 9.000							8 9	8 9	487
20	6D32	FOOTING		20		X			6 9.000							6 9	6 9	203
60	9D33	FOOTING		17		X			8 11.000							10 2	10 2	2765
6	8H30	BEAM		18		X			12 3.000							14 1	14 1	226
2	6H31	BEAM		20		X			14 3.000							14 3	14 3	43
2	8H32	BEAM		18		X			14 3.000							16 1	16 1	86
4	8H33	BEAM		18		X			13 6.000							15 4	15 4	164
4	8H34	BEAM		18		X			6 5.000							8 3	8 3	88
2	6H35	BEAM		20		X			6 5.000							6 5	6 5	19
12	8H36	BEAM		18		X			25 1.000							26 11	26 11	862
2	6H37	BEAM		20		X			25 1.000							25 1	25 1	75
8	8H38	BEAM		18		X			5 8.000							7 6	7 6	160
92	4P30	COLUMNS		16		X			2 3.000							7 11	7 11	487
64	6U30	BEAM		13	S	X			2 5.000	2 9.000	2 5.000	2 9.000				11 8	11 2	1073
8	4U31	BEAM		10	S	X				6.000	2 5.000					3 5	3 3	17
2	6U32	BEAM		13	S	X			2 5.000	2 6.375	2 5.000	2 6.375				11 3	10 9	32

BILL OF REINFORCING STEEL

NO. REQ'D.	MARK NO. (SIZE MARK)	LOCATION	EPOXY (E)	SHAPE NO.	STIRRUP (S)	SUBSTR. (X)	VARIES (V)	NO. EACH	B FT. IN.	C FT. IN.	D FT. IN.	E FT. IN.	F FT. IN.	H FT. IN.	K FT. IN.	NOMINAL LENGTH FT. IN.	ACTUAL LENGTH FT. IN.	WEIGHT LBS.
7	6U33	BEAM		13	S	X			2 5.000	3 0.750	2 5.000	3 0.750				12 4	11 10	124
2	6U34	BEAM		10	S	X				2 2.000	2 6.375					6 10	6 7	20
2	6U35	BEAM		10	S	X				2 2.000	3 0.750					7 5	7 1	21
40	9V30	COLUMN		17		X			24 1.000							25 4	25 4	3445
20	9V31	COLUMN		17		X			27 1.000							28 4	28 4	1927
20	9V32	COLUMN		17		X			24 8.000							25 11	25 11	1762
14	W5W30	A.B.WELL		22		X			15.000	9.125						23 0	23 0	54
		INT.BT.NO.4																
8	6D40	FOOTING		10		X				4 1.000	8 0.000					16 2	15 10	190
24	8D41	FOOTING		20		X			8 9.000							8 9	8 9	561
24	6D42	FOOTING		20		X			6 9.000							6 9	6 9	243
52	9D43	FOOTING		17		X			7 11.000							9 2	9 2	1521
6	6H40	BEAM		18		X			12 3.000							14 1	14 1	226
2	6H41	BEAM		20		X			14 3.000							14 3	14 3	43
2	8H42	BEAM		18		X			14 3.000							16 1	16 1	86
4	8H43	BEAM		18		X			13 6.000							15 4	15 4	164
4	8H44	BEAM		18		X			6 5.000							8 3	8 3	88
2	6H45	BEAM		20		X			6 5.000							6 5	6 5	19
12	8H46	BEAM		18		X			25 1.000							26 11	26 11	862
2	6H47	BEAM		20		X			25 1.000							25 1	25 1	75
8	8H48	BEAM		18		X			5 8.000							7 6	7 6	160
3	6H400	COLL.WALL		20		X			39 6.000							39 6	39 6	178
22	5H401	COLL.WALL		20		X			40 4.000							40 4	40 4	925
2	5H402	COLL.WALL		20		X			31 6.000							31 6	31 6	66
3	5H403	COLL.WALL		20		X			31 1.000							31 1	31 1	140
5	6H404	COLL.WALL		20		X			10 11.000							10 11	10 11	82
22	5H405	COLL.WALL		20		X			8 2.000							8 2	8 2	187
10	6H406	COLL.WALL		20		X			8 2.000							8 2	8 2	123
12	6H407	COLL.WALL		20		X			14 6.000							14 6	14 6	261
44	5H408	COLL.WALL		20		X			15 4.000							15 4	15 4	704
13	5H409	COLL.WALL		7		X			3 8.500	2 3.500						8 8	8 8	118
14	5H410	COLL.WALL		7		X			3 8.500	2 3.500						8 8	8 8	127
24	5H411	COLL.WALL		20		X			14 8.000							14 6	14 6	367
10	6H412	COLL.WALL		20		X			14 8.000							14 8	14 8	220
12	6H413	COLL.WALL		20		X			14 6.000							14 6	14 6	261
48	5H414	COLL.WALL		20		X			15 4.000							15 4	15 4	768
2	6H415	COLL.WALL		20		X			40 4.000							40 4	40 4	121
2	3H416	COLL.WALL		20		X			31 6.000							31 6	31 6	95
5	6H417	COLL.WALL		20		X			15 4.000							15 4	15 4	184
8	6H418	COLL.WALL		20		X			15 4.000							15 4	15 4	184
105	4P40	COLUMNS		16		X			2 3.000							7 11	7 11	555
64	6U40	BEAM		13	S	X			2 5.000	2 9.000	2 5.000	2 9.000				11 8	11 2	1073
8	4U41	BEAM		10	S	X				6.000	2 5.000					3 5	3 3	17
2	6U42	BEAM		10	S	X				2 2.000	3 0.750					7 5	7 1	21
7	6U43	BEAM		13	S	X			2 5.000	3 0.750	2 5.000	3 0.750				12 4	11 10	124
2	6U44	BEAM		10	S	X				2 2.000	2 6.750					6 11	6 7	20
39	9V40	COLUMNS		20		X			18 9.000							18 9	18 9	2486
12	9V41	COLL.WALL		20		X			12 6.000							12 6	12 6	156
107	9V42	COLL.WALL		20		X			13 6.000							13 6	13 6	1507
26	9V43	COLUMNS		17		X			14 10.000							16 1	16 1	1422

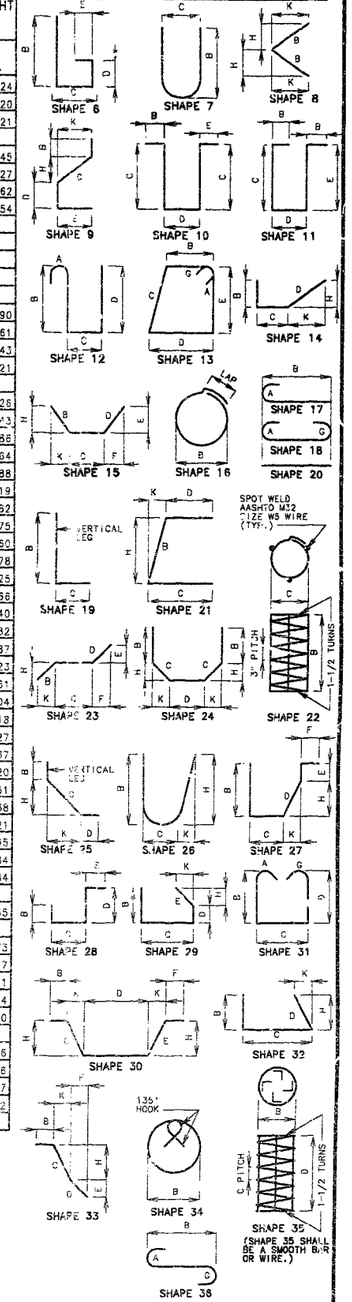

BENDING DIAGRAMS

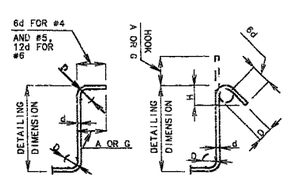

STIRRUP HOOK DIMENSIONS			
GRADES 40 – 50 – 60 KSI			
BAR SIZE	D (IN.)	90° HOOK	135° HOOK
		HOOK A OR G	HOOK A OR G	APEX DIM. H
#4	2"	4-1/2"	4-1/2"	3"
#5	2-1/2"	6"	5-1/2"	3-3/4"
#6	4-1/2"	12"	8"	4-1/2"

NOTE: UNLESS OTHERWISE NOTED DIAMETER "D" IS THE SAME FOR ALL BENDS AND HOOKS ON A BAR.

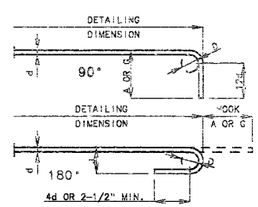

END HOOK DIMENSIONS				
BAR SIZE	D (IN.)	ALL GRADES		
		180° HOOKS		90° HOOKS
		A OR G	J	A OR G
#3	2-1/4"	5"	3"	6"
#4	3"	6"	4"	8"
#5	3-3/4"	7"	5"	10"
#6	4-1/2"	8"	6"	12"
#7	5-1/4"	10"	7"	14"
#8	6"	11"	8"	16"
#9	9-1/2"	15"	11-3/4"	19"
#10	10-3/4"	17"	13-1/4"	22"
#11	12"	19"	14-3/4"	2'-0"
#14	18-1/4"	2'-3"	21-3/4"	2'-7"

NOTE:
ALL STANDARD HOOKS AND BENDS OTHER THAN 180 DEG. TO BE BENT WITH THE SAME PROCEDURE AS FOR 90 DEG. STD. HOOKS.
HOOKS AND BENDS SHALL BE IN ACCORDANCE WITH THE PROCEDURES AS SHOWN ON THIS SHEET.
E = EPOXY COATED REINFORCEMENT.
S = STIRRUP.
X = BAR IS INCLUDED IN SUBSTRUCTURE QUANTITIES.
V = BAR DIMENSIONS VARY IN EQUAL INCREMENTS BETWEEN DIMENSIONS SHOWN ON THIS LINE AND THE FOLLOWING LINE.
NO. EA. = NUMBER OF BARS OF EACH LENGTH.
NOMINAL LENGTHS ARE BASED ON OUT TO OUT DIMENSIONS SHOWN IN BENDING DIAGRAMS AND ARE LISTED FOR FABRICATORS USE. (NEAREST INCH)
ACTUAL LENGTHS ARE MEASURED ALONG CENTERLINE BAR TO THE NEAREST INCH.
PAYWEIGHTS ARE BASED ON ACTUAL LENGTHS.
FOUR ANGLE OR CHANNEL SPACERS ARE REQUIRED FOR EACH COLUMN SPIRAL. SPACERS ARE TO BE PLACED ON INSIDE OF SPIRALS. LENGTH AND WEIGHT OF COLUMN SPIRALS DO NOT INCLUDE SPLICES OR SPACERS.
REINFORCING STEEL (GRADE 60) = FY 60,000 PSI.

NOTE: THIS DRAWING IS NOT TO SCALE. FOLLOW DIMENSIONS.

STD 90.8	REVISED
MAY 1974	OCT. 1991

DETAILED JULY 1993
CHECKED JULY 1993

SHEET NO. 50 OF 63.

JACKSON COUNTY A-1427R1

FINAL PLANS

BILL OF REINFORCING STEEL

NO. REQ'D.	MARK NO. (SIZE MARK)	LOCATION	EPOXY (E)	SHAPE NO.	STIRRUP (S)	SUBSTR. (X)	VARIES (V)	NO. EACH	B FT. IN.	C FT. IN.	D FT. IN.	E FT. IN.	F FT. IN.	H FT. IN.	K FT. IN.	NOMINAL LENGTH FT. IN.	ACTUAL LENGTH FT. IN.	WEIGHT LBS.
13	9V44	COLUMN		20		X			17 9.000							17 9	17 9	785
13	9V45	COLUMN		20		X			15 4.000							15 4	15 4	678
57	5V46	COLL.WALL		20		X			12 6.000							12 6	12 6	743
13	9V47	COLUMN		17		X			14 9.000							16 0	16 0	707
14	W5W40	A.B.WELL		22		X			15.000	9.125						23 0	23 0	54
		INT.BT.NO.5																
8	6D50	FOOTINGS		10	S	X				4 3.000	8 0.000					16 6	16 2	194
20	8D51	FOOTINGS		20		X			6 9.000							8 9	8 9	467
20	6D52	FOOTINGS		20		X			7 1.000							7 1	7 1	213
44	9D53	FOOTINGS		17		X			7 8.000							8 11	8 11	1334
4	6H51	BEAM		20		X			15 3.000							15 3	15 3	92
6	8H52	BEAM		18		X			15 3.000							17 1	17 1	365
16	8H53	BEAM		18		X			14 6.000							16 4	16 4	698
8	8H54	BEAM		18		X			6 0.000							7 10	7 10	167
2	6H55	BEAM		20		X			6 9.000							6 9	6 9	20
4	8H56	BEAM		18		X			6 9.000							8 7	8 7	92
2	6H57	BEAM		20		X			14 8.000							14 8	14 8	44
4	8H58	BEAM		18		X			14 8.000							16 6	16 6	176
8	8H59	BEAM		18		X			14 2.000							16 0	16 0	342
10	6H500	COLL.WALL		20		X			14 9.000							14 9	14 9	222
18	5H501	COLL.WALL		20		X			14 9.000							14 9	14 9	277
2	6H502	COLL.WALL		20		X			8 10.000							8 10	8 10	27
11	5H503	COLL.WALL		7		X			3 8.000	2 3.000						8 6	8 6	98
3	6H504	COLL.WALL		20		X			6 6.000							8 6	8 6	38
96	4P50	COLUMNS		16		X			2 3.000							7 11	7 11	508
62	6U50	BEAM		13	S	X			2 5.000	2 9.000	2 5.000	2 9.000				11 8	11 2	1040
8	4U51	BEAM		10	S	X				6.000	2 5.000					3 5	3 3	17
2	6U52	BEAM		10	S	X				22.000	3 2.125					6 10	6 6	20
9	6U53	BEAM		13	S	X			2 5.000	2 9.000	2 5.000	2 9.000				11 6	11 2	151
3	6U54	BEAM		10	S	X				22.000	2 8.250					6 4	6 1	18
4	6U55	BEAM		10	S	X				22.000	2 7.500					6 4	6 0	36
20	6U56	BEAM		13	S	X			2 5.000	3 2.125	2 5.000	3 2.125				12 6	12 1	363
22	9V50	COLUMNS		17		X			26 0.000							27 3	27 3	2038
11	9V51	COLUMN		17		X			26 4.000							27 7	27 7	1032
11	9V52	COLUMN		17		X			16 3.000							17 6	17 6	655
12	5V53	COLL.WALL		20		X			10 9.000							10 9	10 [illegible]	135
9	5V54	COLL.WALL		20		X			9 9.000							9 9	[illegible]	92
11	9V55	COLUMN		20		X			15 0.000							15 0	15 0	561
14	W5W50	A.B.WELL		22		X			15.000	9.125						23 0	23 0	54
		SUPERSTR.																
		END BT.NO.1																
5	6F1	WING BRACE		23					14.000	4 11.750	14.000	9.125	10.625	9.125	10.625	7 4	7 3	54
3	6F2	DIAPH.		21					2 5.875	4 11.000				2 5.625	4.250	7 5	7 2	32

BILL OF REINFORCING STEEL

NO. REQ'D.	MARK NO. (SIZE MARK)	LOCATION	EPOXY (E)	SHAPE NO.	STIRRUP (S)	SUBSTR. (X)	VARIES (V)	NO. EACH	B FT. IN.	C FT. IN.	D FT. IN.	E FT. IN.	F FT. IN.	H FT. IN.	K FT. IN.	NOMINAL LENGTH FT. IN.	ACTUAL LENGTH FT. IN.	WEIGHT LBS.
5	6F3	WING BRACE		23					14.000	4 5.500	14.000	9.125	10.625	9.125	10.625	6 10	6 9	51
4	6F4	DIAPH.		23					2 5.500	4 8.250				2 5.250	4.250	7 2	7 0	42
12	6H1	DIAPH.		20					15 9.000							15 9	15 9	284
12	6H2	DIAPH.		20					15 3.000							15 3	15 3	275
2	4H3	CORBEL		20					16 9.000							16 9	16 9	22
24	6H4	BEAM		20					14 6.000							14 6	14 6	523
6	6H5	DIAPH.		20					14 7.000							14 7	14 7	131
6	6H6	DIAPH.		20					14 1.000							14 1	14 1	127
12	6H7	BEAM		20					13 4.000							13 4	13 4	240
6	6H8	DIAPH.		20					6 6.000							6 6	6 6	59
6	6H9	DIAPH.		20					6 0.000							6 0	6 0	54
12	6H10	BEAM		20					5 9.000							5 9	5 9	104
1	4H11	CORBEL		20					13 8.000							13 8	13 8	9
1	4H12	CORBEL		20					5 0.000							5 0	5 0	3
6	6H13	WING		20					11 5.000							11 5	11 5	103
10	5H14	WING		20			V	2	5 1.000							5 1	5 1	
		INCREMENT = 17.500 INCH							10 11.000							10 11	10 11	120
6	6H15	WING		20					11 7.000							11 7	11 7	104
12	6H16	WING		20			V	2	4 8.000							4 8	4 8	
		INCREMENT = 15.625 INCH							11 2.000							11 2	11 2	143
2	6T1	WING		25					2 0.375	9 1.750	3 2.125			4 2.250	8 1.625	14 4	14 3	43
2	6T2	WING		25					2 0.375	9 5.250	3 4.000			4 8.750	8 2.000	14 10	14 9	44
22	5U1	BEAM		50	S				5 3.000	3 2.500	2 4.500	2 11.500		2 10.375	8.625	13 10	13 7	312
12	4U2	BEAM		51	S				3 1.500	3 2.500	3.250	2 11.500		2 10.375	8.625	12 1	12 11	103
28	5U3	DIAPH.		10	S					3 1.000	2 6.250					8 8	8 6	248
42	6U4	DIAPH.		19	S				3 1.000	4 2.000						7 3	7 1	447
4	5U5	DIAPH.		13	S				2 6.250	3 1.000	2 6.250	3 1.000				12 2	[illegible] 10	49
19	5U6	DIAPH.		10	S					3 1.000	2 6.250					8 8	8 6	168
25	6U7	DIAPH.		19	S				3 1.000	4 2.000						7 3	7 1	266
48	4U8	CORBEL		10	S					17.500	6.000					3 5	3 3	105
10	5U9	BEAM		50	S				5 2.875	3 2.500	2 4.375	2 11.500		2 10.375	8.625	13 10	13 7	142
6	5U10	BEAM		50	S				5 7.875	3 2.500	2 5.625	3 3.250		3 2.500	8.625	14 7	14 5	90
4	4U11	BEAM		51	S				3 2.375	3 2.500	3.875	2 11.500		2 10.375	8.625	12 2	12 8	34
1	5U12	BEAM		52	S				3 8.875	2 6.000	10.375	3 3.250		3 2.500	[illegible].625	10 1	9 10	10
1	4U13	BEAM		51	S				3 2.375	3 2.500	3.875	2 11.500		2 10.375	8.625	12 2	12 8	8
6	5V1	BEAM		20					5 4.000							5 4	5 4	33
6	5V2	BEAM		23	S				2 11.500	2 5.500				8.625	2 10.375	5 5	5 5	34
16	6V3	WING		20			V	2	2 4.000							2 4	2 4	
		INCREMENT = 6.625 INCH							6 2.000							6 2	6 2	102
4	6V4	WING		20					6 7.000							6 7	6 7	40
3	5V5	BEAM		20					5 4.000							5 4	5 4	17
3	5V6	BEAM		23	S				2 11.500	2 5.500				8.625	2 10.375	5 5	5 5	17
1	5V7	BEAM		20					5 9.000							5 9	5 9	6
1	5V8			23	S				2 11.500	2 10.500				8.625	2 10.375	5 10	5 10	6
16	6V9	WING		20			V	2	2 5.000							2 5	2 5	
		INCREMENT = 7.250 INCH							6 8.000							6 8	6 8	109
4	6V10	WING		20					7 1.000							7 1	7 1	43
		END BT.NO.6																

STATE	PROJ. NO.	SHEET NO.
MO.	J4I0807	

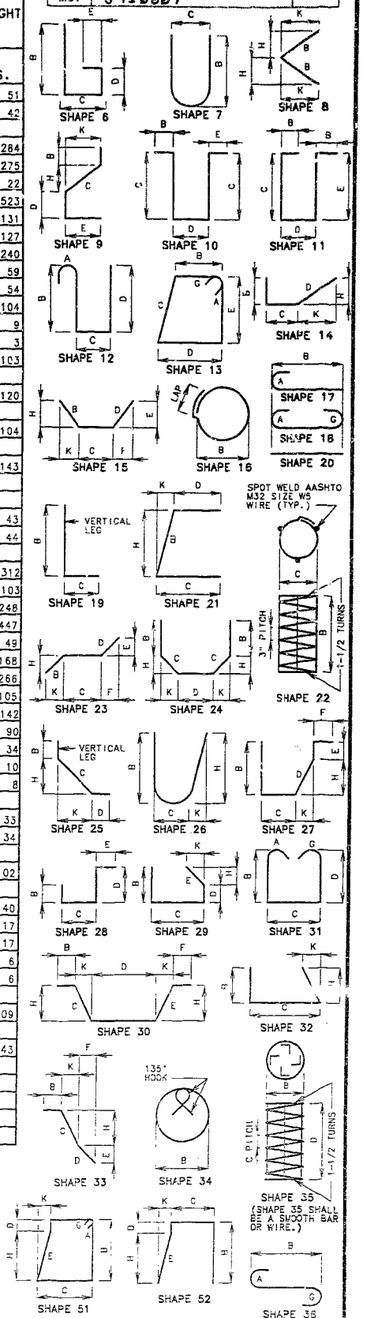

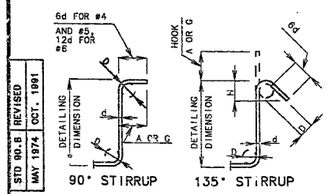

STD NO.8 REVISED MAY 1974 OCT. 1991

DETAILED JULY 1993
CHECKED JULY 1993

STIRRUP HOOK DIMENSIONS

GRADES 40 – 50 – 60 KSI

BAR SIZE	D (IN.)	90° HOOK: HOOK A OR G	135° HOOK: HOOK A OR G	135° HOOK: APPROX. H
#4	2"	4-1/2"	4-1/2"	3"
#5	2-1/2"	6"	5-1/2"	3-3/4"
#6	4-1/2"	12"	8"	4-1/2"

NOTE: UNLESS OTHERWISE NOTED DIAMETER "D" IS THE SAME FOR ALL BENDS AND HOOKS ON A BAR.

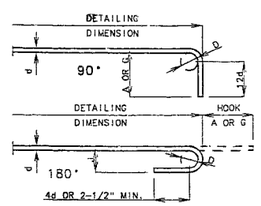

END HOOK DIMENSIONS

BAR SIZE	D (IN.)	ALL GRADES 180° HOOKS A OR G	ALL GRADES 180° HOOKS J	ALL GRADES 90° HOOKS A OR G
#3	2-1/4"	5"	3"	6"
#4	3"	6"	4"	8"
#5	3-3/4"	7"	5"	10"
#6	4-1/2"	8"	6"	12"
#7	5-1/4"	10"	7"	14"
#8	6"	11"	8"	16"
#9	9-1/2"	15"	11-3/4"	19"
#10	10-3/4"	17"	13-1/4"	22"
#11	12"	19"	14-3/4"	2'-0"
#14	18-1/4"	2'-3"	21-3/4"	2'-7"

NOTE:
ALL STANDARD HOOKS AND BENDS OTHER THAN 180 DEG. TO BE BENT WITH THE SAME PROCEDURE AS FOR 90 DEG. STD. HOOKS.
HOOKS AND BENDS SHALL BE IN ACCORDANCE WITH THE PROCEDURES AS SHOWN ON THIS SHEET.
E = EPOXY COATED REINFORCEMENT.
S = STIRRUP.
X = BAR IS INCLUDED IN SUBSTRUCTURE QUANTITIES.
V = BAR DIMENSIONS VARY IN EQUAL INCREMENTS BETWEEN DIMENSIONS SHOWN ON THIS LINE AND THE FOLLOWING LINE.
NO. EA. = NUMBER OF BARS OF EACH LENGTH.
NOMINAL LENGTHS ARE BASED ON OUT TO OUT DIMENSIONS SHOWN IN BENDING DIAGRAMS AND ARE LISTED FOR FABRICATORS USE. (NEAREST INCH)
ACTUAL LENGTHS ARE MEASURED ALONG CENTERLINE BAR TO THE NEAREST INCH.
PAYWEIGHTS ARE BASED ON ACTUAL LENGTHS.
FOUR ANGLE OR CHANNEL SPACERS ARE REQUIRED FOR EACH COLUMN SPIRAL. SPACERS ARE TO BE PLACED ON INSIDE OF SPIRALS. LENGTH AND WEIGHT OF COLUMN SPIRALS DO NOT INCLUDE SPLICES OR SPACERS.
REINFORCING STEEL (GRADE 60) = FY 60,000 PSI.

3 REVISED: JUNE 28,1994

NOTE: THIS DRAWING IS NOT TO SCALE. FOLLOW DIMENSIONS.

SHEET NO. 51 OF 63.

JACKSON COUNTY A-1427R1

FINAL PLANS

BILL OF REINFORCING STEEL

NO. REQ'D.	MARK NO. (SIZE MARK)	LOCATION	EPOXY (E)	SHAPE NO.	STIRRUP (S)	SUBSTR. (X)	VARIES (V)	NO. EACH	B FT. IN.	C FT. IN.	D FT. IN.	E FT. IN.	F FT. IN.	H FT. IN.	K FT. IN.	NOMINAL LENGTH FT. IN.	ACTUAL LENGTH FT. IN.	WEIGHT LBS.
16	6F61	WING BRACE		23					14.000	4 9.250	14.000	9.875	9.875	9.875	9.875	7 1	7 0	168
9	6F62	DIAPH.		19					4 9.000	2 5.250						7 2	7 0	95
20	6H60	WING WALL		20					12 6.000							12 6	12 6	376
12	6H61	DIAPH.		20					15 1.000							15 1	15 1	272
12	6H62	DIAPH.		20					15 7.000							15 7	15 7	281
2	4H63	CORBEL		20					15 4.000							15 4	15 4	20
24	6H64	BEAM		20					14 4.000							14 4	14 4	517
6	6H65	DIAPH.		20					6 6.000							6 6	6 6	59
6	6H66	DIAPH.		20					6 0.000							6 0	6 0	54
12	6H67	BEAM		20					5 9.000							5 9	5 9	104
6	6H68	DIAPH.		20					14 6.000							14 6	14 6	131
6	6H69	DIAPH.		20					14 0.000							14 0	14 0	126
12	6H70	BEAM		20					13 3.000							13 3	13 3	239
6	6H71	WING		20					11 5.000							11 5	11 5	103
28	6H72	WING		20			V	2	3 11.000							3 11	3 11	
		INCREMENT =							11 1.000							11 1	11 1	315
		6.625 INCH																
6	6H73	WING		20					11 5.000							11 5	11 5	103
2	6T60	WING		25					2 0.375	9 8.125	3 1.750			5 1.875	8 2.250	14 10	14 9	44
2	6T61	WING		25					2 0.375	9 7.500	3 1.875			5 1.000	8 2.125	14 10	14 9	44
22	5U60	BEAM		50	S				5 2.500	3 2.500	2 4.000	2 11.500		2 10.375	8.625	13 9	13 6	310
30	5U61	DIAPH.		10	S					3 1.000	2 6.000					8 8	8 6	266
8	4U62	BEAM		51	S				3 3.000	3 2.500	4.500	2 11.500		2 10.375	8.625	12 4	12 11	69
43	4U63	CORBEL		10	S					17.500	6.000					3 5	3 3	94
40	5U64	DIAPH.		19	S				3 1.000	4 2.000						7 3	7 1	426
2	5U65	DIAPH.		13	S				2 6.000	3 1.000	2 6.000	3 1.000				12 1	11 9	25
4	4U66	BEAM		51	S				3 7.000	3 2.500	8.500	2 11.500		2 10.375	8.625	13 0	13 7	36
17	5U67	BEAM		50	S				5 7.625	3 2.500	2 9.125	2 11.500		2 10.375	8.625	14 7	14 4	254
5	5U68	DIAPH.		10	S					3 1.000	2 6.000					8 8	8 6	44
2	5U69	DIAPH.		13	S				2 6.000	3 11.000	2 6.000	3 11.000				13 9	13 5	28
18	5U70	DIAPH.		10	S					3 1.000	2 6.000					8 8	8 6	160
26	6U71	DIAPH.		19	S				3 1.000	3 10.000						6 11	6 9	264
8	5V60	BEAM		20					5 6.000							5 6	5 6	46
8	5V61	BEAM		23	S				2 11.500	2 7.250				8.625	2 10.375	5 7	5 7	47
24	6V62	WING WALL		20					6 9.000							6 9	6 9	243
16	6V63	WING		20			V	2	2 5.000							2 5	2 5	
		INCREMENT =							6 8.000							6 8	6 8	109
		7.250 INCH																
4	6V64	WING		20					7 1.000							7 1	7 1	43
16	6V65	WING		20			V	2	2 5.000							2 5	2 5	
		INCREMENT =							6 7.000							6 7	6 7	108
		7.125 INCH																
4	6V66	WING		20					7 0.000							7 0	7 0	42
2	5V67	BEAM		20					5 9.000							5 9	5 9	12
										10.625				25	2 10.375	[illegible]	[illegible]	[illegible]
3	5V69	BEAM		20					5 7.000							5 7	5 7	17
3	5V70	BEAM		23	S				2 11.500	2 8.625				8.625	2 10.375	5 8	5 8	18
290	5S1	SLAB		20					60 0.000							60 0	60 0	1 8148
14	5S2	SLAB		20			V	1	10 2.000							10 2	10 2	
		INCREMENT =							12 5.000							12 5	12 5	165
		2.125 INCH																

BILL OF REINFORCING STEEL

NO. REQ'D.	MARK NO. (SIZE MARK)	LOCATION	EPOXY (E)	SHAPE NO.	STIRRUP (S)	SUBSTR. (X)	VARIES (V)	NO. EACH	B FT. IN.	C FT. IN.	D FT. IN.	E FT. IN.	F FT. IN.	H FT. IN.	K FT. IN.	NOMINAL LENGTH FT. IN.	ACTUAL LENGTH FT. IN.	WEIGHT LBS.
14	5S3	SLAB		20			V	1	23 7.000							23 7	23 7	
		INCREMENT =							25 9.000							25 9	25 9	360
		2.000 INCH																
2023	5S4	SLAB		20					15 7.000							15 7	15 7	3 2881
48	6S5	SLAB		20					34 0.000							34 0	34 0	2451
48	6S6	SLAB		20					34 8.000							34 8	34 8	2499
24	6S7	SLAB		20					34 10.000							34 10	34 10	1256
24	6S8	SLAB		20					34 4.000							34 4	34 4	1238
24	6S9	SLAB		20					28 0.000							28 0	28 0	1009
24	6S10	SLAB		20					33 8.000							33 8	33 8	1214
4	5S11	SLAB		20			V	1	4 6.000							4 6	4 6	
		INCREMENT =							15 0.000							15 0	15 0	41
		42.000 INCH																
4	5S12	SLAB		20			V		3 10.000							3 10	3 10	
		INCREMENT =							14 3.000							14 3	14 3	38
		41.625 INCH																
3	5S13	SLAB		20			V	1	2 0.000							2 0	2 0	
		INCREMENT =							12 4.000							12 4	12 4	22
		62.000 INCH																
1	5S14	SLAB		20					11 0.000							11 0	11 0	11
1	5S15	SLAB		20					11 0.000							11 0	11 0	11
15	5S16	SLAB		20			V	1	9 9.000							9 9	9 9	
		INCREMENT =							12 0.000							12 0	12 0	170
		1.875 INCH																
15	5S17	SLAB		20			V	1	23 2.000							23 2	23 2	
		INCREMENT =							25 4.000							25 4	25 4	379
		1.875 INCH																
205	5S21	SLAB		20					60 0.000							60 0	60 0	1 2829
6	5S22	SLAB		20			V	2	2 11.000							2 11	2 11	
		INCREMENT =							3 10.000							3 10	3 10	21
		5.500 INCH																
28	5S23	SLAB		20			V	2	25 5.000							25 5	25 5	
		INCREMENT =							27 6.000							27 6	27 6	773
		1.875 INCH																
965	5S24	SLAB		20					6 6.000							6 6	6 6	6542
32	6S25	SLAB		20					34 0.000							34 0	34 0	1634
32	6S26	SLAB		20					34 8.000							34 8	34 8	1666
10	6S27	SLAB		20					34 10.000							34 10	34 10	523
22	6S28	SLAB		20					34 4.000							34 4	34 4	1135
10	6S29	SLAB		20					27 2.000							27 2	27 2	408
22	6S30	SLAB		20					34 4.000							34 4	34 4	1135
1063	5S31	SLAB		20					14 6.000							14 6	14 6	1 6076
2	5S32	SLAB		20					4 6.000							4 6	4 6	9
3	5S33	SLAB		20			V	1	4 3.000							4 3	4 3	
		INCREMENT =							11 2.000							11 2	11 2	24
		41.500 INCH																
1	5S34	SLAB		20					12 3.000							12 3	12 3	13
1	5S35	SLAB		20					7 0.000							7 0	7 0	7
7	5S36	SLAB		20			V	1	2 11.000							2 11	2 11	
		INCREMENT =							3 10.000							3 10	3 10	25
		1.875 INCH																
1399	5R1	BARRIER CURB		19	S				2 7.500	3.500						2 11	2 10	4134
1343	5R2	BARRIER CURB		15	S				2 7.625	3.500				2 7.500	3.000	2 11	2 10	3969
1270	5R3	BARRIER CURB		19	S				18.500	6.000						2 1	23	2539
1270	5R4	BARRIER CURB		27	S					6.000	11.125	8.500	12.000	9.125	6.375	3 2	3 0	3974
73	5R5	BARRIER CURB		27	S					6.000	11.125	23.750	23.500	9.125	6.375	5 4	5 2	393

STATE	PROJ. NO.	SHEET NO.
MO.	J4I0807	

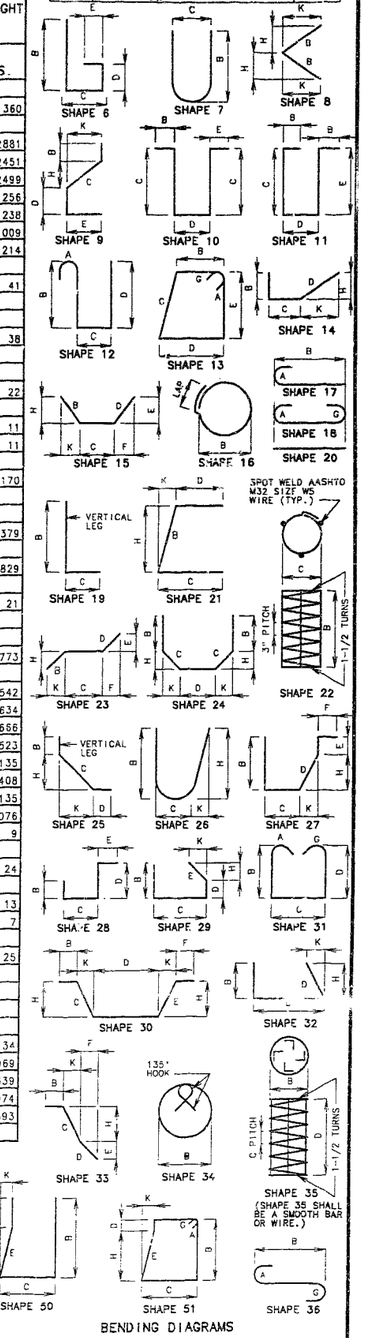

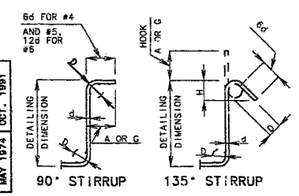

STD 90.6	REVISED
MAY 1974	OCT. 1991

DETAILED JULY 1993
CHECKED JULY 1993

STIRRUP HOOK DIMENSIONS

GRADES 40 – 50 – 60 KSI				
BAR SIZE	D (IN.)	90° HOOK: HOOK A OR G	135° HOOK: HOOK A OR G	135° HOOK: APPROX. H
#3	2"	4-1/2"	4-1/2"	3"
#5	2-1/2"	6"	5-1/2"	3-3/4"
#6	4-1/2"	12"	8"	4-1/2"

NOTE: UNLESS OTHERWISE NOTED DIAMETER "D" IS THE SAME FOR ALL BENDS AND HOOKS ON A BAR.

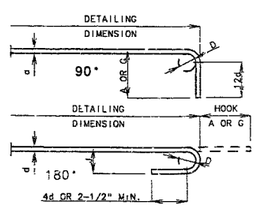

END HOOK DIMENSIONS

BAR SIZE	D (IN.)	ALL GRADES: 180° HOOKS A OR G	180° HOOKS J	90° HOOKS A OR G
#3	2-1/4"	5"	3"	8"
#4	3"	6"	4"	8"
#5	3-3/4"	7"	5"	10"
#6	4-1/2"	8"	6"	12"
#7	5-1/4"	10"	7"	14"
#8	6"	11"	8"	16"
#9	9-1/2"	15"	11-3/4"	19"
#10	10-3/4"	17"	13-1/4"	22"
#11	12"	19"	14-3/4"	2'-0"
#14	18-1/4"	2'-3"	21-3/4"	2'-7"

NOTE:
ALL STANDARD HOOKS AND BENDS OTHER THAN 180 DEG. TO BE BENT WITH THE SAME PROCEDURE AS FOR 90 DEG. STD. HOOKS.
HOOKS AND BENDS SHALL BE IN ACCORDANCE WITH THE PROCEDURES AS SHOWN ON THIS SHEET.
E = EPOXY COATED REINFORCEMENT.
S = STIRRUP.
X = BAR IS INCLUDED IN SUBSTRUCTURE QUANTITIES.
V = BAR DIMENSIONS VARY IN EQUAL INCREMENTS BETWEEN DIMENSIONS SHOWN ON THIS LINE AND THE FOLLOWING LINE.
NO. EA. = NUMBER OF BARS OF EACH LENGTH.
NOMINAL LENGTHS ARE BASED ON OUT TO OUT DIMENSIONS SHOWN IN BENDING DIAGRAMS AND ARE LISTED FOR FABRICATORS USE. (NEAREST INCH)
ACTUAL LENGTHS ARE MEASURED ALONG CENTERLINE BAR TO THE NEAREST INCH.
PAYWEIGHTS ARE BASED ON ACTUAL LENGTHS.
FOUR ANGLE OR CHANNEL SPACERS ARE REQUIRED FOR EACH COLUMN SPIRAL. SPACERS ARE TO BE PLACED ON INSIDE OF SPIRALS. LENGTH AND WEIGHT OF COLUMN SPIRALS DO NOT INCLUDE SPLICES OR SPACERS.
REINFORCING STEEL (GRADE 60) = FY 60,000 PSI.

3 REVISED: JUNE 28,1994

NOTE: THIS DRAWING IS NOT TO SCALE. FOLLOW DIMENSIONS.

JACKSON COUNTY A-1427R1

STATE	PROJ. NO.	SHEET NO.
MO.	J4I0607	267

FINAL PLANS

BILL OF REINFORCING STEEL

NO. REQ'D.	MARK NO. (SIZE MARK)	LOCATION	EPOXY (E)	SHAPE NO.	STIRRUP (S)	SUBSTR. (X)	VARIES (V)	NO. EACH	B FT. IN.	C FT. IN.	D FT. IN.	E FT. IN.	F FT. IN.	H FT. IN.	K FT. IN.	NOMINAL LENGTH FT. IN.	ACTUAL LENGTH FT. IN.	WEIGHT LBS.
73	5R6	BARRIER CURB	E	19	S				2 2.250	6.000						2 8	2 7	197
8	5R7	BARRIER CURB	E	19	S				2 2.250	6.000						2 8	2 7	22
8	5R8	BARRIER CURB	E	27	S					6.000	7.875	23.750	23.500	6.250	4.750	5 [illegible]	4 11	41
24	5R9	BARRIER CURB	E	10	S					2 2.250	7.000					5 0	4 9	119
8	5R10	BARRIER CURB	E	19	S				2 1.500	3.500						2 5	2 4	19
10	5R11	BARRIER CURB	E	20					11 0.000							11 0	11 0	115
2	5R12	BARRIER CURB	E	20					11 9.000							11 9	11 9	25
48	5R13	BARRIER CURB	E	20					5 0.000							5 0	5 0	250
224 (1)	5R14	BARRIER CURB	E	20					9 9.000							9 9	9 9	2298
56	5R15	BARRIER CURB	E	20					26 6.000							26 6	26 6	1548
14	5R16	BARRIER CURB	E	20					32 5.000							32 5	32 5	473
7	5R17	BARRIER CURB	E	20					33 9.000							33 9	33 9	246
14	5R18	BARRIER CURB	E	20					31 5.000							31 5	31 5	459
7	5R19	BARRIER CURB	E	20					37 10.000							37 10	37 10	276
7	5R20	BARRIER CURB	E	20					36 5.000							36 5	36 5	266
56	5R21	BARRIER CURB	E	20					26 7.000							26 7	26 7	1553
14	5R22	BARRIER CURB	E	20					22 3.000							22 3	22 3	325
7	5R23	BARRIER CURB	E	20					34 5.000							34 5	34 5	251
7	5R24	BARRIER CURB	E	20					36 3.000							36 3	36 3	265
14	5R25	BARRIER CURB	E	20					24 0.000							24 0	24 0	350
14	5R26	BARRIER CURB	E	20					22 9.000							22 9	22 9	332
6	5R27	BARRIER CURB	E	20					13 9.000							13 9	13 9	86
10	5R28	BARRIER CURB	E	20					10 0.000							10 0	10 0	104
2	5R29	BARRIER CURB	E	20					10 9.000							10 9	10 9	22
154	5C.	SLIP-FORM CURB OPTION ONLY	E	20					10 0.000							10 0	10 0	1606

(1) DELETE EPOXY COATING

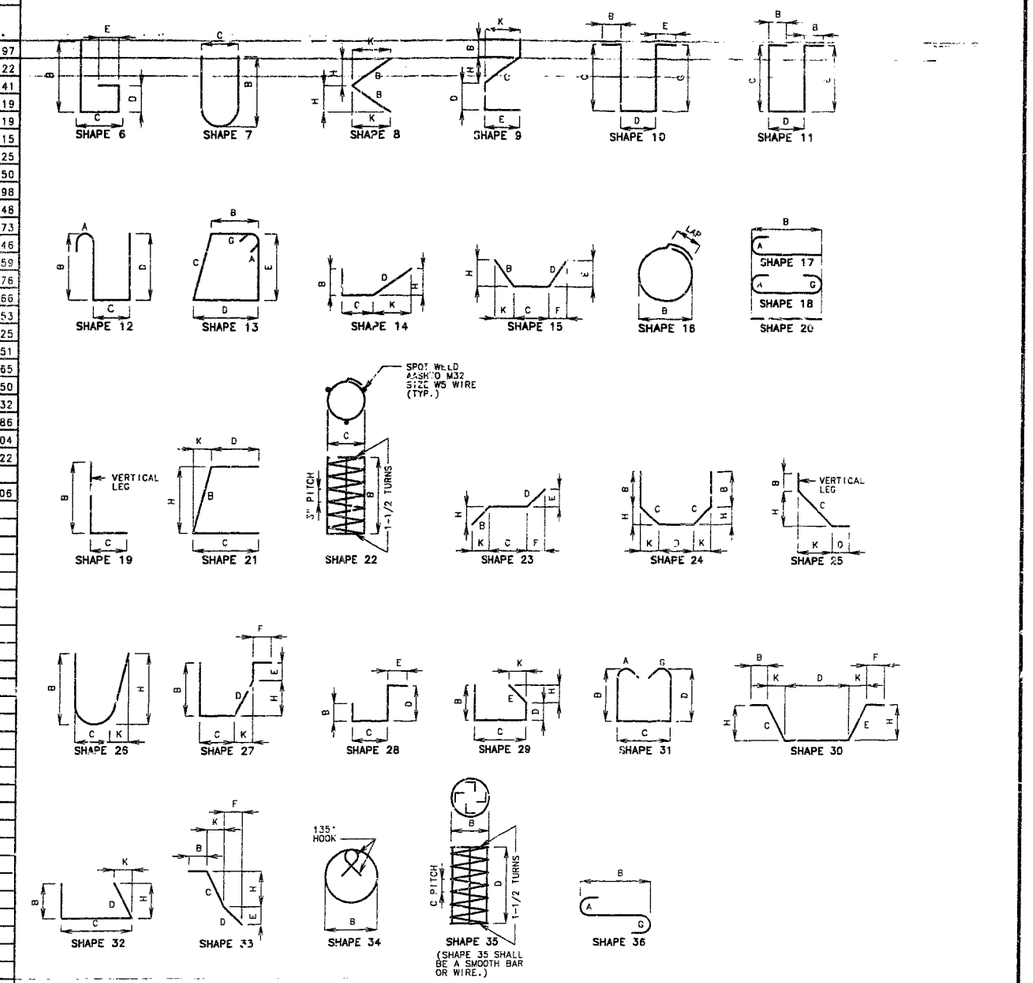

BENDING DIAGRAMS

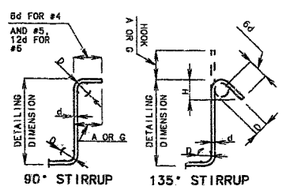

STIRRUP HOOK DIMENSIONS				
GRADES 40 - 50 - 60 KSI				
BAR SIZE	D (IN.)	90° HOOK: HOOK A OR G	135° HOOK: HOOK A OR G	135° HOOK: APPROX. H
#4	2"	4-1/2"	4-1/2"	3"
#5	2-1/2"	6"	5-1/2"	3-3/4"
#6	4-1/2"	12"	8"	4-1/2"

NOTE: UNLESS OTHERWISE NOTED DIAMETER "D" IS THE SAME FOR ALL BENDS AND HOOKS ON A BAR.

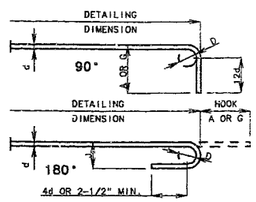

NOTE: THIS DRAWING IS NOT TO SCALE. FOLLOW DIMENSIONS.

TWO ADDITIONAL #5-R14 ARE INCLUDED IN THE BAR BILL FOR TESTING. (1) DELETE

END HOOK DIMENSIONS				
		ALL GRADES		
BAR SIZE	D (IN.)	180° HOOKS: A OR G	180° HOOKS: J	90° HOOKS: A OR G
#3	2-1/4"	5"	3"	6"
#4	3"	6"	4"	8"
#5	3-3/4"	7"	5"	10"
#6	4-1/2"	8"	6"	12"
#7	5-1/4"	10"	7"	14".
#8	6"	11"	8"	16"
#9	9-1/2"	15"	11-3/4"	19"
#10	10-3/4"	17"	13-1/4"	22"
#11	12"	19"	14-3/4"	2'-0"
#14	18-1/4"	2'-3"	2'-3/4"	2'-7"

NOTE:
ALL STANDARD HOOKS AND BENDS OTHER THAN 180 DEG. TO BE BENT WITH THE SAME PROCEDURE AS FOR 90 DEG. STD. HOOKS.
HOOKS AND BENDS SHALL BE IN ACCORDANCE WITH THE PROCEDURES AS SHOWN ON THIS SHEET.
E = EPOXY COATED REINFORCEMENT.
S = STIRRUP.
X = BAR IS INCLUDED IN SUBSTRUCTURE QUANTITIES.
V = BAR DIMENSIONS VARY IN EQUAL INCREMENTS BETWEEN DIMENSIONS SHOWN ON THIS LINE AND THE FOLLOWING LINE.
NO. EA. = NUMBER OF BARS OF EACH LENGTH.
NOMINAL LENGTHS ARE BASED ON OUT TO OUT DIMENSIONS SHOWN IN BENDING DIAGRAMS AND ARE LISTED FOR FABRICATORS USE. (NEAREST INCH)
ACTUAL LENGTHS ARE MEASURED ALONG CENTERLINE BAR TO THE NEAREST INCH.
PAYWEIGHTS ARE BASED ON ACTUAL LENGTHS.
FOUR ANGLE OR CHANNEL SPACERS ARE REQUIRED FOR EACH COLUMN SPIRAL. SPACERS ARE TO BE PLACED ON INSIDE OF SPIRALS. LENGTH AND WEIGHT OF COLUMN SPIRALS DO NOT INCLUDE SPLICES OR SPACERS.
REINFORCING STEEL (GRADE 60) = FY 60,000 PSI.

(1) REVISED: MAY 12, 1994

STD 90.8	REVISED
MAY 1974	OCT. 1991

DETAILED JULY 1993
CHECKED JULY 1993

SHEET NO. 53 OF 63.

JACKSON COUNTY A-1427R1

227

STATE	PROJ. NO.	SHEET NO.
MO.	J4I0807	268

FINAL PLANS

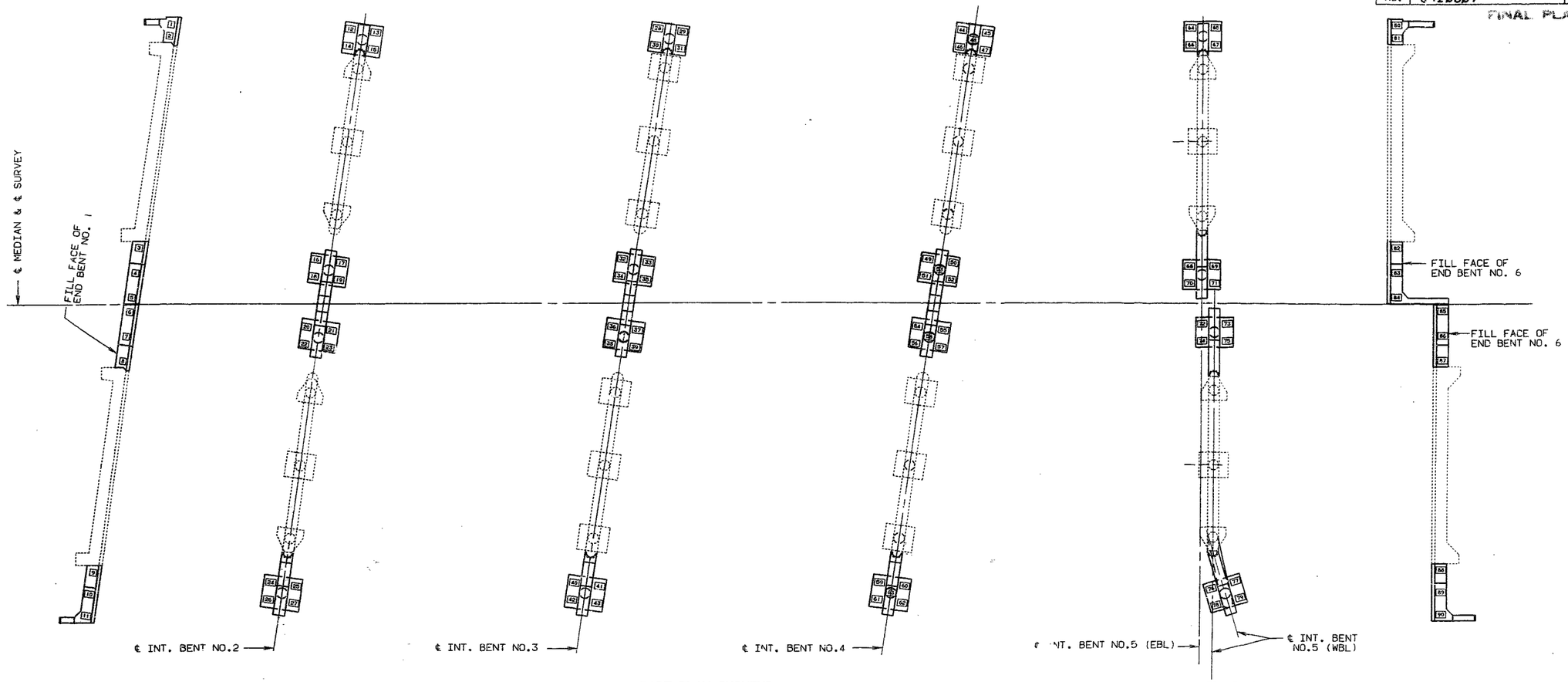

PART PLAN SHOWING PILE NUMBERING FOR RECORDING "AS BUILT" PILE DATA

NOTE: INDICATE IN REMARK COLUMN:
A.) IF PILING WERE DRIVEN TO PRACTICAL REFUSAL.
B.) PILE BATTER IF OTHER THAN SHOWN ON BENT DETAIL SHEET.
C.) TYPE OF PILING USED.

"AS BUILT" PILE DATA

LOCATION	PILE NO.	LENGTH IN PLACE (FT.)	COMPUTED BEARING (TONS)	REMARKS
END BENT NO. 1	1	65	138.8	All pile HP10x42 and driven to practical refusal.
	2	64	147.5	
	3	63	70.8	
	4	63	75.0	
	5	63	63.7	
	6	63	79.6	
	7	63	79.6	
	8	63	70.8	
	9	63	98.3	
	10	63	78.7	
	11	64	65.6	
INT. BENT NO. 2	12	42	107.5	

"AS BUILT" PILE DATA

LOCATION	PILE NO.	LENGTH IN PLACE (FT.)	COMPUTED BEARING (TONS)	REMARKS
	13	42	107.5	
	14	42	107.5	
	15	42	102.6	
	16	42	102.6	
	17	42	102.6	
	18	42	102.6	
	19	42	102.6	
	20	41	102.6	
	21	42	112.1	
	22	42	98.2	
	23	42	102.6	
	24	42	98.2	

"AS BUILT" PILE DATA

LOCATION	PILE NO.	LENGTH IN PLACE (FT.)	COMPUTED BEARING (TONS)	REMARKS
	25	44	112.9	
	26	42	98.2	
	27	44	102.6	
INT. BENT NO. 3	28	41	107.5	
	29	40	112.9	
	30	41	112.9	
	31	41	112.9	
	32	40	141.1	
	33	45	112.9	
	34	41	107.5	
	35	41	107.5	
	36	44	102.6	

~~NOTE: THIS SHEET TO BE COMPLETED BY MHTD CONSTRUCTION PERSONNEL.~~

DETAILED APR. 1993
CHECKED APR. 1993

NOTE: THIS DRAWING IS NOT TO SCALE. FOLLOW DIMENSIONS.

SHEET NO. 54 OF 63.

JACKSON COUNTY A-1427R1

293 580

STATE	PROJ. NO.	SHEET NO.
MO.	J4I0807	269

FINAL PLANS

"AS BUILT" PILE DATA

LOCATION	PILE NO.	LENGTH IN PLACE (FT.)	COMPUTED BEARING (TONS)	REMARKS
	37	42	112.9	All pile HP 10x42 and driven to practical refusal.
	38	43	107.5	
	39	43	107.5	
	40	40	107.5	
	41	39	107.5	
	42	39	102.6	
	43	38	107.5	
INT. BENT NO. 4	44	32	118.8	
	45	30	125.5	
	46	33	112.9	
	47	30	107.5	
	48	30	112.9	
	49	34	112.9	
	50	31	141.1	
	51	34	112.9	
	52	31	125.5	
	53	32	107.5	
	54	35	112.9	
	55	32	107.5	
	56	34	132.8	
	57	32	112.9	
	58	33	112.9	
	59	38	107.5	
	60	38	118.8	
	61	39	107.5	
	62	40	118.8	
	63	40	107.5	
INT. BENT NO. 5	64	20	112.9	
	65	21	125.5	
	66	22	112.9	
	67	18	112.9	
	68	27	107.5	
	69	24	118.8	

"AS BUILT" PILE DATA

LOCATION	PILE NO.	LENGTH IN PLACE (FT.)	COMPUTED BEARING (TONS)	REMARKS
	70	27	107.5	
	71	25	112.9	
	72	27	107.5	
	73	23	112.9	
	74	27	112.9	
	75	22	112.9	
	76	34	125.5	
	77	29	107.5	
	~~77~~	~~21~~		
	78	21	132.8	
	79	30	112.9	
END BENT NO. 6	80	31	118.0	
	81	32	147.5	
	82	35	60.5	
	83	34	60.5	
	84	35	62.1	
	85	32	69.4	
	86	32	63.8	
	87	33	71.5	
	88	40	65.6	
	89	40	65.6	
	90	41	65.6	
		3490	Total	

"AS BUILT" PILE DATA

LOCATION	PILE NO.	LENGTH IN PLACE (FT.)	COMPUTED BEARING (TONS)	REMARKS

NOTE: INDICATE IN REMARK COLUMN:
A.) IF PILING WERE DRIVEN TO PRACTICAL REFUSAL.
B.) PILE BATTER IF OTHER THAN SHOWN ON BENT DETAIL SHEET.
C.) TYPE OF PILING USED.

NOTE: THIS SHEET TO BE COMPLETED BY MHTD CONSTRUCTION PERSONNEL.

MISC. PILES IN PLACE
PILES IN PLACE
MAY 1992
REVISED

DETAILED APR. 1993
CHECKED APR. 1993

NOTE: THIS DRAWING IS NOT TO SCALE. FOLLOW DIMENSIONS.

JACKSON COUNTY A-1427R1

STATE	PROJ. NO.	SHEET NO.
MO.	J4I0807	270

FINAL PLANS

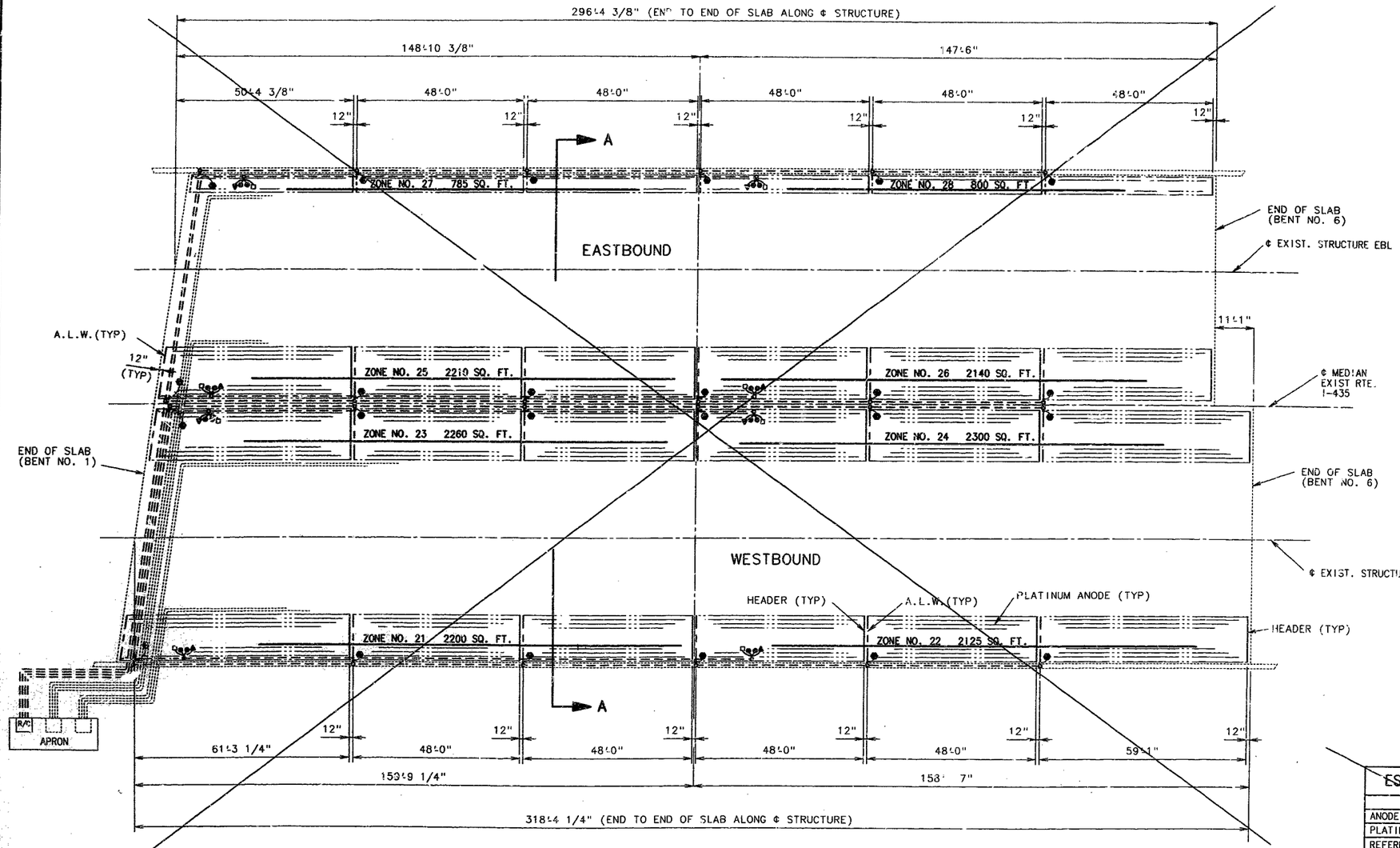

PART PLAN OF SLAB SHOWING PLATINUM CATHODIC PROTECTION SYSTEM ~~(ALTERNATE "A")~~

DENOTATIONS

- A.L.W. (ANODE LEAD WIRE)
- HEADER
- PLATINUM ANODE
- SYSTEM NEGATIVE CONNECTION
- REFERENCE CELL
- GROUNDS
- REBAR PROBE (CORROSOMETER)
- CONDUIT

NOTE:

THE ANODE LEADS AND SYSTEM NEGATIVE RETURN LEADS SHALL BE ROUTED IN THE SAME CONDUIT.

THE REFERENCE CELL, REFERENCE CELL GROUND LEAD, REBAR PROBE AND PROBE GROUND LEAD SHALL BE ROUTED IN THE SAME CONDUIT.

THE REFERENCE CELL GROUND LEAD SHALL BE WELDED TO TOP REBAR WITHIN ONE FOOT OF THE REFERENCE CELL.

ALL ZONES ARE SIMILAR WITH VARYING WIDTHS (SEE SECTION THRU SLAB).

ANODE ASSEMBLY NUMBER MUST MATCH ZONE NUMBER.

NOTE:

FOR SECTION A-A, TYPICAL ZONE LAYOUT AND PARTIAL ELECTRICAL SCHEMATIC, SEE SHEET NO. 57.

Used Alt. B

ESTIMATED QUANTITIES	FOR INFORMATION ONLY	
ITEM	UNIT	QUANTITY
ANODE LEAD WIRE & HEADER	LIN. FT.	624
PLATINUM ANODES	LIN. FT.	15136
REFERENCE CELLS	EACH	8
REBAR PROBES	EACH	8
THERMITE WELDS	EACH	100 *
CONDUIT 2"Ø PVC	LIN. FT.	2269 **
CONDUIT 1 1/2"Ø PVC	LIN. FT.	36

NOTE: ANODE AND CONDUIT LENGTHS ARE APPROXIMATE, ACTUAL LENGTHS ARE THE RESPONSIBILITY OF THE CONTRACTOR.

(*)-SEE SHEET NO. 61 FOR LOCATION OF GROUNDS AT STRINGERS AND REINFORCING MATS.

(**)-QUANTITY DOES NOT INCLUDE CONDUIT FOR RELOCATING EXISTING RECTIFIER CONTROLLERS.

NOTE: FOR PART PLAN SHOWING LOCATION OF NEW RECTIFIER AND RELOCATION OF EXISTING RECTIFIERS, SEE SHEET NO. 60.

N

NOTE:

DIMENSIONS ARE ALONG ¢ OF EXIST. STRUCTURE (END OF SLAB TO END OF SLAB).

THE ANODE LEAD WIRE AND HEADER SHALL BE NO. 10 STRANDED COPPER WIRE WITH HMWPE INSULATION.

FACTORY SUPPLIED FIELD SPLICES WILL BE PERMITTED BETWEEN STAGES ON THE ANODE LEAD WIRE (A.L.W.) AND HEADER AS DIRECTED BY THE ENGINEER.

THE EXISTING CATHODIC PROTECTION SYSTEM, (ZONES 1 THRU 20), SHALL REMAIN IN PLACE.

DETAILED DEC. 1992
CHECKED APR. 1993

NOTE: THIS DRAWING IS NOT TO SCALE. FOLLOW DIMENSIONS.

JACKSON COUNTY A-1427R1

STATE	PROJ. NO.	SHEET NO.
MO.	J4I0807	271

FINAL PLANS

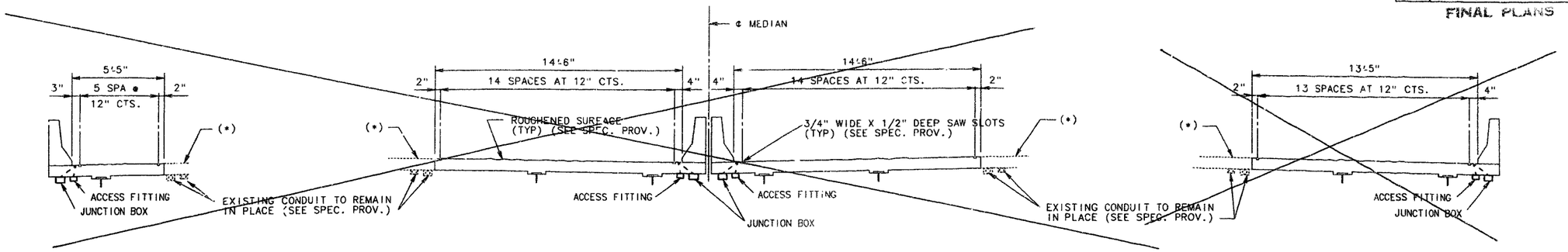

SECTION A-A
~~(AT ALTERNATE "A")~~

(*)-EXISTING CATHODIC PROTECTION SYSTEM TO REMAIN IN PLACE. (SEE SPEC. PROV.).

NOTE: FOR LOCATION OF SECTION A-A, SEE SHEET NO. 56.

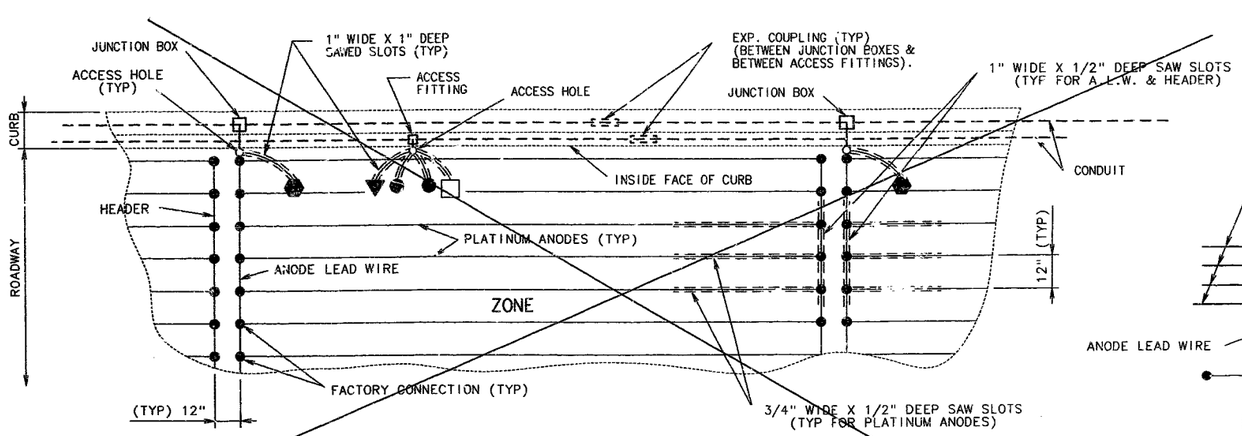

TYPICAL ZONE LAYOUT, EXCEPT AS NOTED, FOR ~~(ALTERNATE "A")~~ SYSTEM

NOTE: ANODES SHALL BE PLACED AS SHOWN WITH A MINIMUM TOLERANCE OF PLUS OR MINUS THREE INCHES.

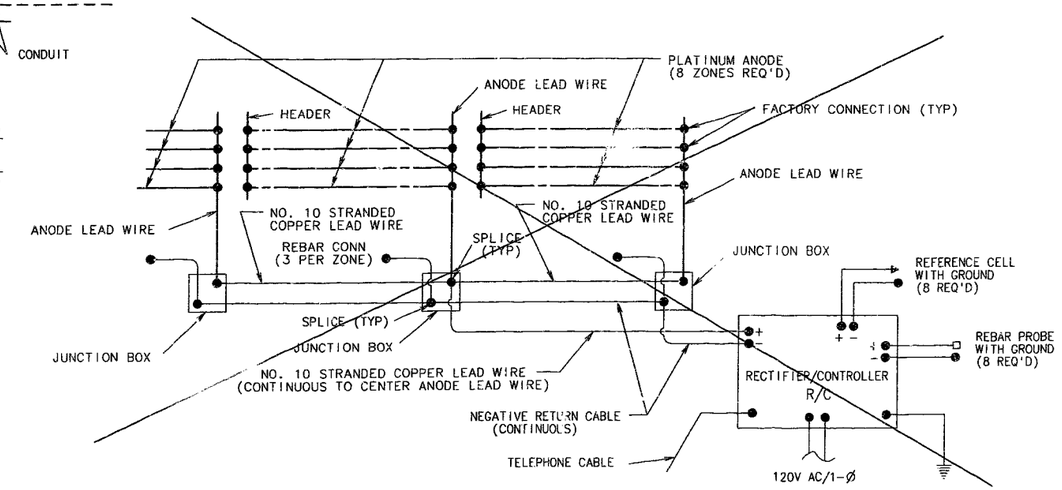

PARTIAL SCHEMATIC
~~(ALTERNATE "A")~~

DETAILED OCT. 1992
CHECKED APR. 1993

NOTE: THIS DRAWING IS NOT TO SCALE. FOLLOW DIMENSIONS.

JACKSON COUNTY

A-1427R1

Sht 293

STATE	PROJ. NO.	SHEET NO.
MO.	J4I0807	276

FINAL PLANS

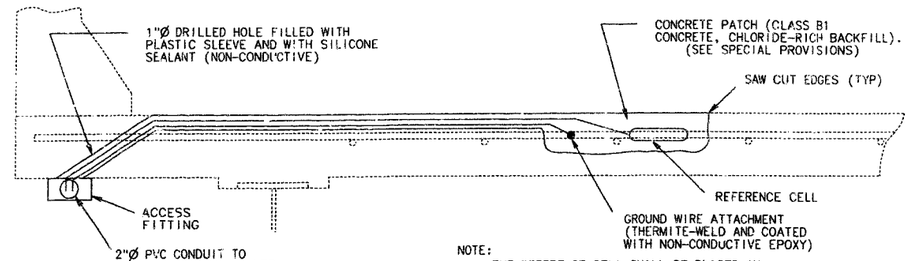

NOTE:
THE REFERENCE CELL SHALL BE PLACED IN THE EXCAVATED AREA WITHIN 1" BUT NOT IN DIRECT CONTACT WITH TOP MAT OF REINFORCING STEEL.

REFERENCE CELL DETAILS

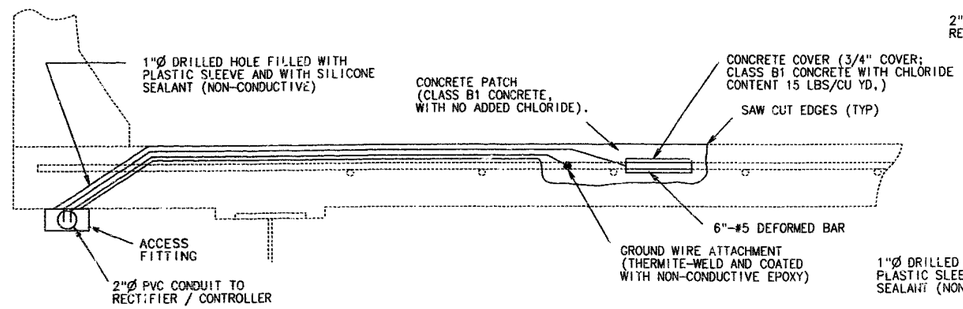

REBAR PROBE DETAILS

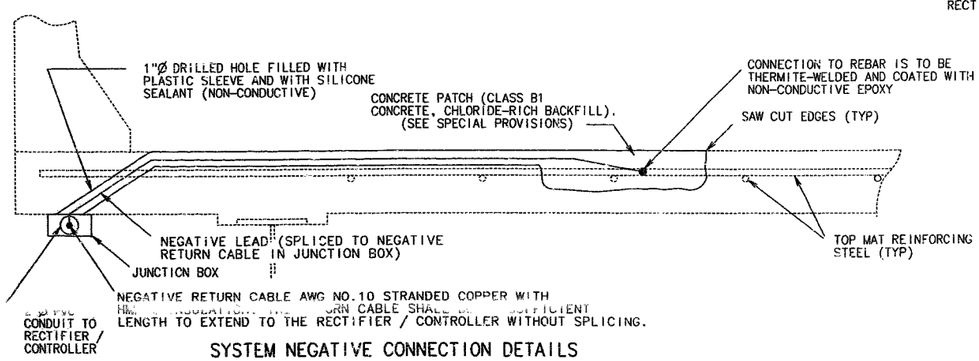

SYSTEM NEGATIVE CONNECTION DETAILS

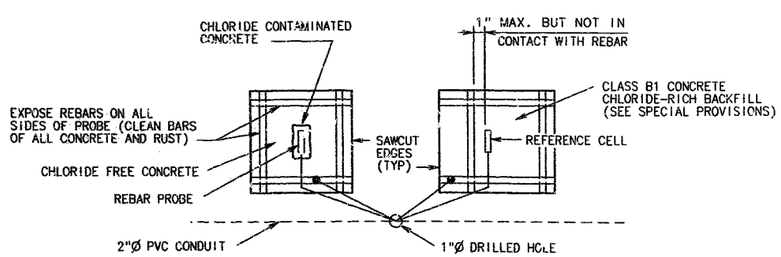

PLAN OF REBAR PROBE AND REFERENCE CELL

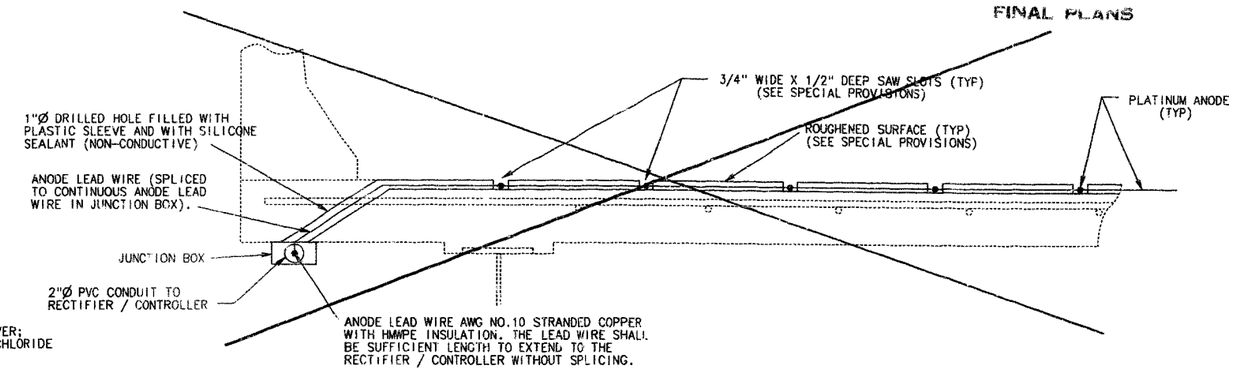

~~ALTERNATE "A"~~

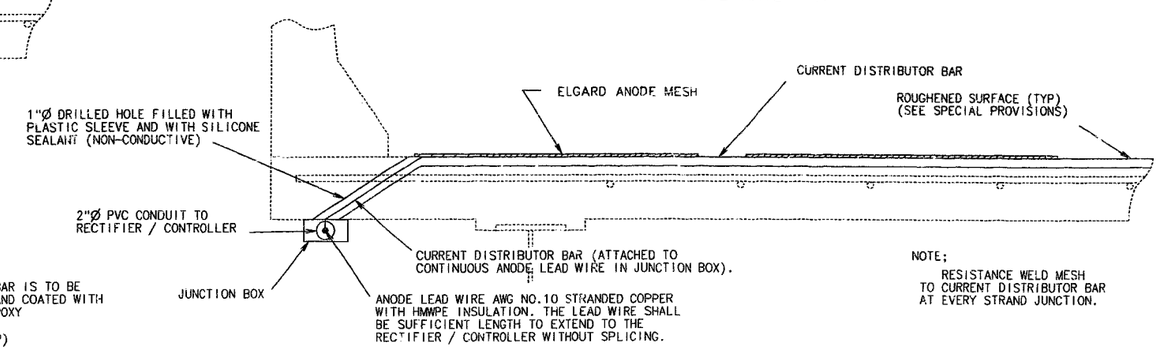

NOTE;
RESISTANCE WELD MESH TO CURRENT DISTRIBUTOR BAR AT EVERY STRAND JUNCTION.

ALTERNATE "B"

NOTE:
ALL CONCRETE REMOVAL SHALL BE INITIATED BY SAW CUTTING THE FIRST 1/2".

NOTE:

CONDUIT SHALL BE SCHEDULE 40 HEAVY WALL PVC (POLYVINYL CHLORIDE PLASTIC). EACH SECTION OF CONDUIT SHALL BEAR THE UNDERWRITERS LABORATORIES, INC. (UL) LABEL.

CONDUIT SHALL BE SECURED TO CONCRETE WITH CLAMPS (GALVANIZED/AASHTO M111) AT ABT. 5'0" CTS. CONCRETE ANCHORS FOR CLAMPS SHALL MEET FEDERAL SPECIFICATION FF-S-325, GROUP II,TYPE 4, CLASS 1 AND SHALL BE GALVANIZED IN ACCORDANCE WITH ASTM A-153, B695-91 CLASS 50 OR STAINLESS STEEL. MINIMUM EMBEDMENT IN CONCRETE SHALL BE 1 3/4". THE SUPPLIER SHALL FURNISH A MANUFACTURERS CERTIFICATION THAT THE CONCRETE ANCHORS MEET THE REQUIRED MATERIAL AND GALVANIZING SPECIFICATIONS.

WEEPHOLES SHALL BE PROVIDED AT APPROPRIATE LOCATIONS TO DRAIN ANY MOISTURE IN THE CONDUIT LINES.

EXPANSION COUPLINGS SHALL BE INSTALLED ON CONDUIT LINES BETWEEN ALL JUNCTION BOXES AND BETWEEN ALL ACCESS FITTINGS AS APPROVED BY THE ENGINEER.

THE LOCATION AND DIRECTION OF CONDUIT MAY BE SHIFTED TO MEET FIELD CONDITIONS AS DIRECTED BY THE ENGINEER.

ALL JUNCTION BOXES SHALL BE PVC MOLDED, SURFACE MOUNTED, SIZE 6" X 6" X 4" AND EQUAL TO CARLON ELECTRICAL CONSTRUCTION PRODUCTS OR TRIANGLE CONDUIT AND CABLE COMPANY INC. THE TERMINATIONS SHALL BE PERMANENT OR SEPERABLE.

THE TERMINATIONS AND COVERS SHALL BE OF WATERTIGHT CONSTRUCTION.

DETAILED: DEC. 1992
CHECKED: APR. 1993

NOTE: THIS DRAWING IS NOT TO SCALE. FOLLOW DIMENSIONS.

JACKSON COUNTY

A-1427R1

301-184

STATE	PROJ. NO.	SHEET NO.
MO.	J4I0807	~~278~~ 277

FINAL PLANS

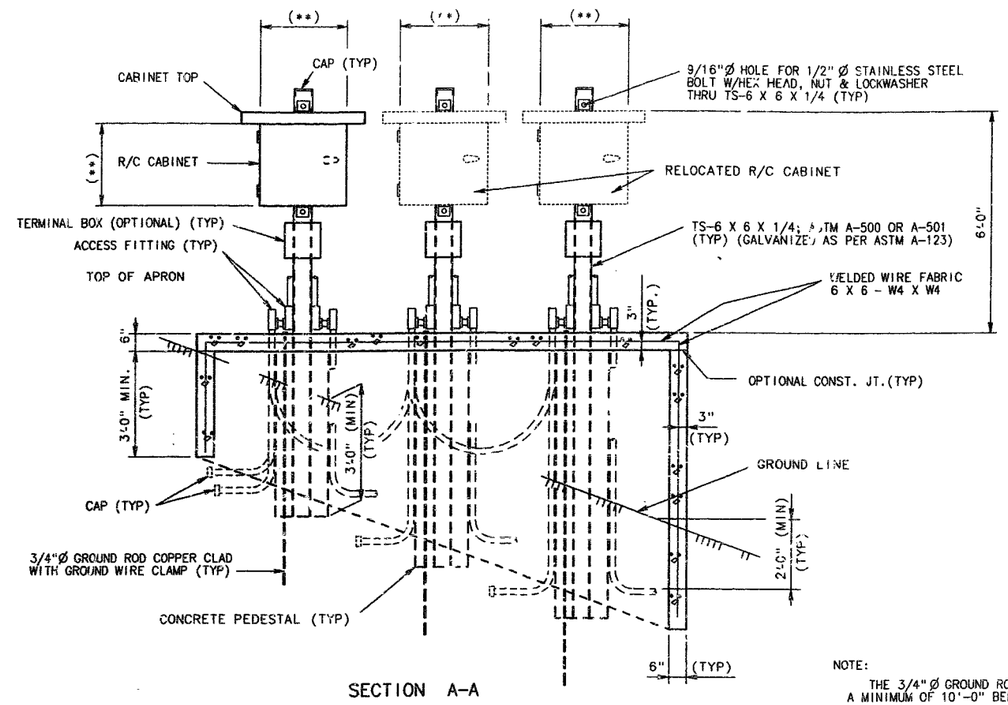

SECTION A-A

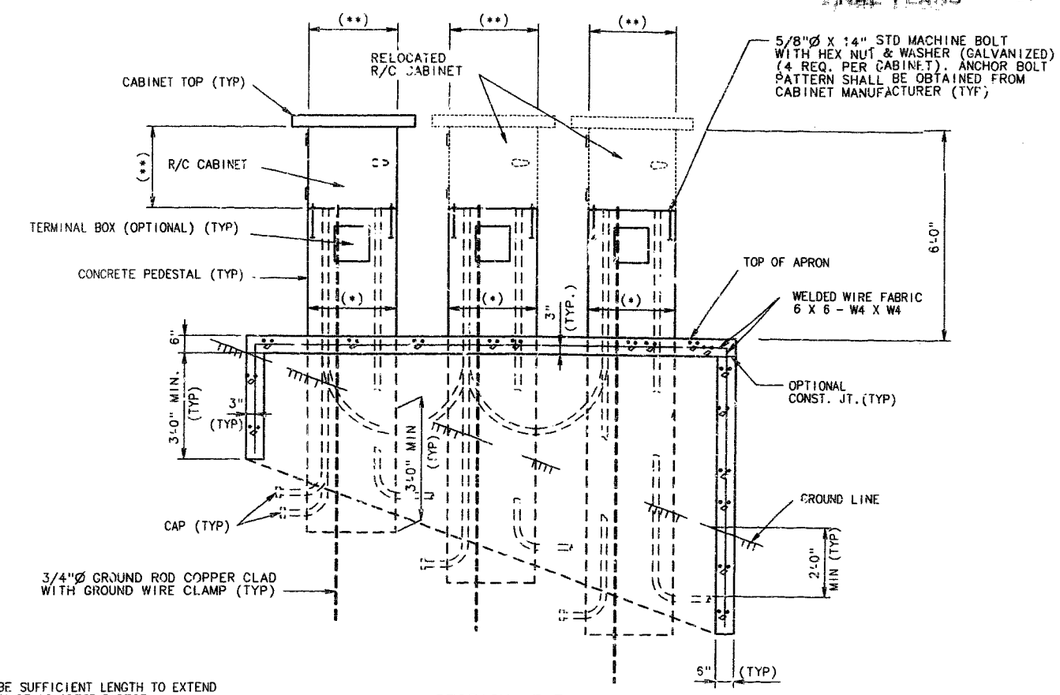

SECTION B-B

NOTE:

THE 3/4" Ø GROUND ROD SHALL BE SUFFICIENT LENGTH TO EXTEND A MINIMUM OF 10'-0" BELOW BOTTOM OF CONCRETE PEDESTAL.

GROUND WIRE SHALL BE NO.6 AWG MINIMUM.

KNOCKOUTS OR DRILLED HOLES SHALL BE PROVIDED IN CABINETS FOR ALL CONDUIT. LOCATIONS OF THESE HOLES ARE THE RESPONSIBILITY OF THE CONTRACTOR AND CABINET MANUFACTURER.

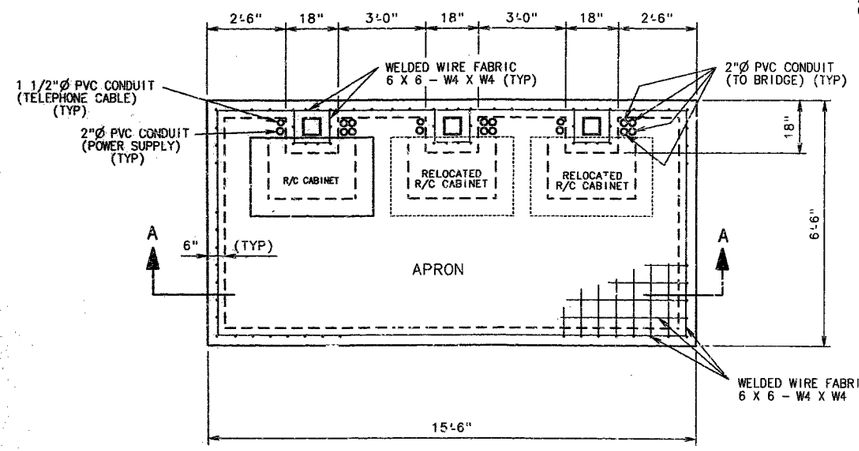

PLAN OPTION "A"

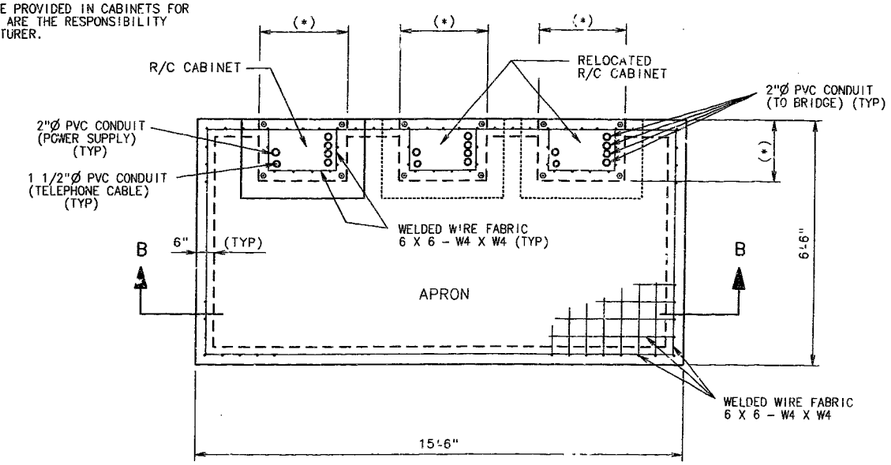

PLAN OPTION "B"

(**) DIMENSIONS ACCORDING TO MANUFACTURER'S SPECIFICATIONS.

(*) DIMENSIONS ACCORDING TO MANUFACTURED CABINET

DETAILED DEC. 1992
CHECKED APR. 1993

NOTE: THIS DRAWING IS NOT TO SCALE. FOLLOW DIMENSIONS.

SHEET NO. 63 OF 63

JACKSON COUNTY

A-1427R1

3082 295

MISSOURI HIGHWAY AND TRANSPORTATION COMMISSION

STATE	PROJ. NO.	SHEET NO.
MO.		298
SEC./SUR. 33 TWP. 48N RGE. 38W		

WIDEN AND REDECK EXISTING SPANS
(112'-145'-145'-112') CONT.COMP. PLATE GDR. SPANS
- 4.0 % GRADE

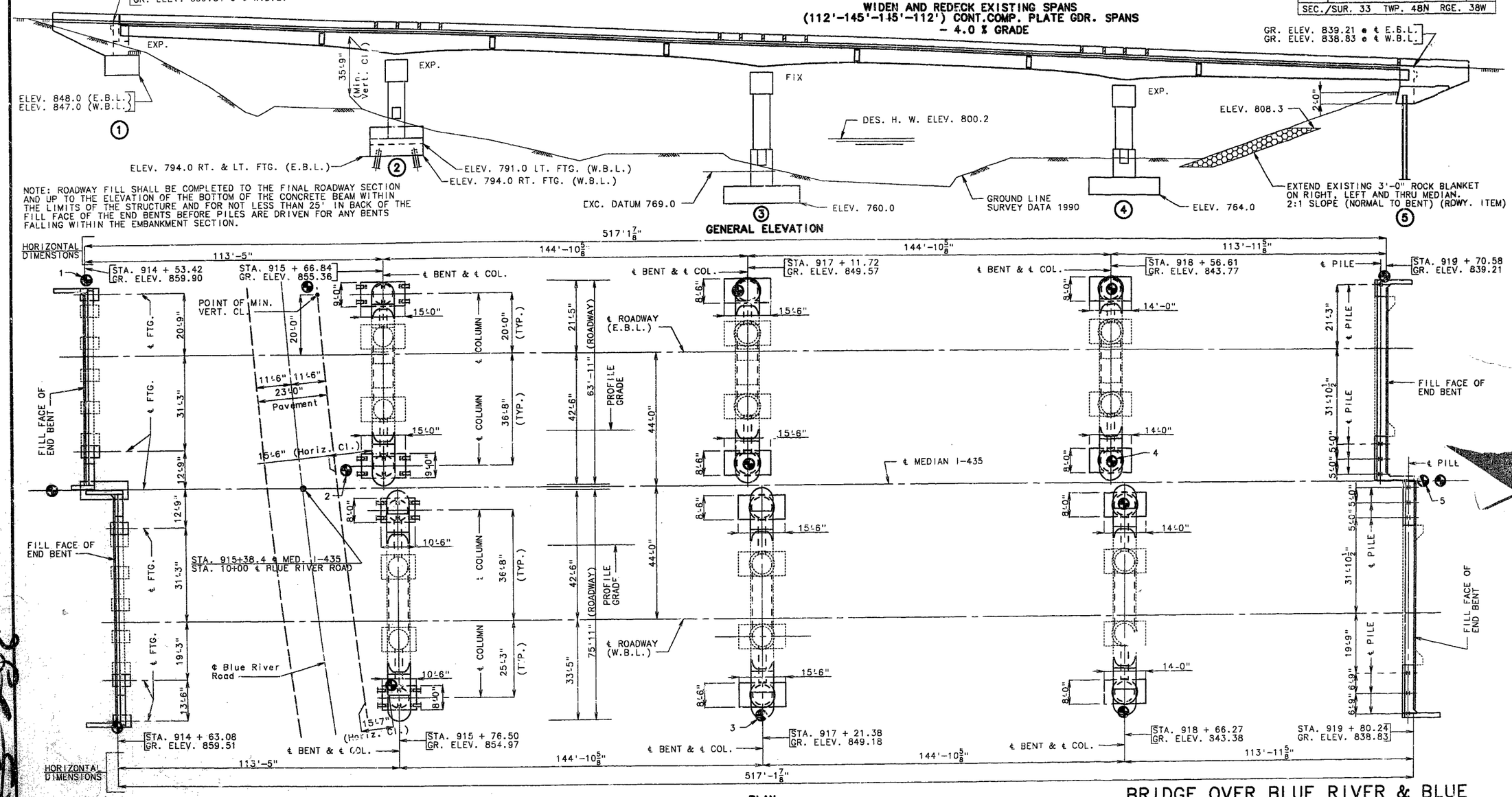

B.M. ELEV. 860.63 P.-K. NAIL IN BR. CURB @ N.E. COR. E.B.L. BR. A-610

INDICATES LOCATION OF BORINGS.

NOTE: FOR GENERAL NOTES, ESTIMATED QUANTITIES, HYDROLOGIC DATA AND PILE AND FOOTING DATA SEE SHEET NO. 2.

NOTE AND DISCLAIMER REGARDING BORING LOG DATA

THE LOCATIONS OF ALL SUBSURFACE BORING FOR THIS STRUCTURE ARE SHOWN ON THE BRIDGE PLAN SHEET FOR THIS STRUCTURE. BORING DATA FOR THE NUMBERED LOCATIONS IS SHOWN ON SHEET NO. 2. THE BORING DATA FOR ALL LOCATIONS INDICATED, AS WELL AS ANY OTHER BORING LOGS OR OTHER FACTUAL RECORDS OF SUBSURFACE DATA AND INVESTIGATIONS PERFORMED BY THE DEPARTMENT FOR THE DESIGN OF THE PROJECT, IS AVAILABLE FROM THE DISTRICT MATERIALS ENGINEER UPON WRITTEN REQUEST AS OUTLINED IN THE PROJECT SPECIAL PROVISIONS. NO GREATER SIGNIFICANCE OR WEIGHT SHOULD BE GIVEN TO THE BORING DATA DEPICTED ON THE PLAN SHEETS THAN TO SUBSURFACE DATA AVAILABLE FROM THE DISTRICT OR ELSEWHERE.

THE COMMISSION DOES NOT REPRESENT OR WARRANT THAT ANY SUCH BORING DATA ACCURATELY DEPICTS THE CONDITIONS TO BE ENCOUNTERED IN CONSTRUCTING THIS PROJECT. A CONTRACTOR ASSUMES ALL RISKS IT MAY ENCOUNTER IN BASING ITS BID PRICES, TIME OR SCHEDULE OF PERFORMANCE ON THE BORING DATA DEPICTED HERE OR THOSE AVAILABLE FROM THE DISTRICT, OR ON ANY OTHER DOCUMENTATION NOT EXPRESSLY WARRANTED, WHICH THE CONTRACTOR MAY OBTAIN FROM THE COMMISSION.

NOTE: THIS DRAWING IS NOT TO SCALE. FOLLOW DIMENSIONS.

DESIGNED FEB. 1993
DETAILED AUG. 1993
CHECKED AUG. 1993

BRIDGE OVER BLUE RIVER & BLUE RIVER ROAD

STATE ROAD: INTERSTATE RTE. I-435
ABOUT 1.5 MILES WEST OF RTE. 71
PROJECT NO. **STA. 914+63.08**
JOB NO. J410807 **RTE. I-435**

JACKSON COUNTY

DATE 2/28/94

STD.
STD. 706.35
A-610R1

STATE	PROJ. NO.	SHEET NO.
MO.		55

GENERAL NOTES:

DESIGN SPECIFICATIONS: A.A.S.H.T.O.-1992
LOAD FACTOR DESIGN.
SEISMIC PERFORMANCE CATEGORY A.

DESIGN LOADING:
HS20-44 MODIFIED 24,000# TANDEM AXLE
NO FUTURE WEARING SURFACE
EARTH 120#/CU. FT., EQUIVALENT FLUID PRESSURE 45#/CU. FT.
FATIGUE STRESS - CASE I.

DESIGN UNIT STRESSES:
CLASS B CONCRETE (SUBSTRUCTURE) F'C=3,000 PSI.
CLASS B1 CONCRETE (SAFETY BARRIER CURB) F'C=4,000 PSI.
CLASS B2 CONCRETE (SUPERSTRUCTURE EXCEPT SAFETY BARRIER CURB) F'C=4,000 PSI.
REINFORCING STEEL (GRADE 60) FY=60,000 PSI.
STRUCTURAL CARBON STEEL FY=36,000 PSI.
STEEL PILE FB=9,000PSI.

STRUCTURAL STEEL:
FIELD CONNECTIONS, HIGH STRENGTH BOLTS 3/4"Ø, HOLES 13/16"Ø, EXCEPT AS NOTED.
HIGH STRENGTH BOLTS, NUTS AND WASHERS WILL BE SAMPLED FOR QUALITY ASSURANCE AS SPECIFIED IN STD. SPEC. 106 AND FIELD SECTION (F5-712).

REINFORCING STEEL:
MINIMUM CLEARANCE TO REINFORCING STEEL SHALL BE 1 1/2", UNLESS OTHERWISE SHOWN.
ALL REINFORCING BARS IN TOPS OF SUBSTRUCTURE BEAMS OR CAPS SHALL BE SPACED TO CLEAR ANCHOR BOLTS FOR BEARINGS BY AT LEAST 1/2".
BARS BONDED IN OLD CONCRETE NOT REMOVED SHALL BE CLEANLY STRIPPED AND EMBEDDED INTO NEW CONCRETE WHERE POSSIBLE. IF LENGTH IS AVAILABLE, OLD BARS SHALL EXTEND INTO NEW CONCRETE AT LEAST 40 DIAMETERS FOR SMOOTH BARS AND 30 DIAMETERS FOR DEFORMED BARS, UNLESS OTHERWISE NOTED.

PAINT:
PAINT NEW STRUCTURAL STEEL SYSTEM E SHOP COATS (GRAY) IN ACCORDANCE WITH SPECIAL PROVISIONS. NO FIELD PAINT EXCEPT FOR TOUCH UP.

AREAS TO BE ENCASED IN END BENT CONCRETE SHALL BE HAND CLEANED OF LOOSE RUST AND SCALE BEFORE CONCRETE IS POURED AND PAINTED WITH 1 COAT OF CALCIUM SULFONATE PRIMER. COST TO BE INCLUDED IN OTHER ITEMS.

JOINT FILLER:
ALL JOINT FILLER SHALL MEET THE REQUIREMENTS OF STD. SPEC. 1057.2.4, EXCEPT AS NOTED.

NOTE: OUTLINE OF OLD WORK IS INDICATED BY LIGHT DASHED LINES. HEAVY LINES INDICATE NEW WORK.
TRAFFIC OVER STRUCTURE TO BE MAINTAINED DURING CONSTRUCTION, SEE SHEET NO. 3.
CONTRACTOR SHALL VERIFY ALL DIMENSIONS IN FIELD BEFORE ORDERING NEW STEEL.

THE * DIAMETER RESIN ANCHOR SYSTEMS SHALL HAVE A MINIMUM ULTIMATE PULLOUT STRENGTH OF ** LBS. IN CONCRETE WITH FC'= 4000 PSI, SEE SPECIAL PROVISIONS.

* BAR SIZE	** PULLOUT
5/8"	15,500
3/4"	20,400
1"	33,600

ESTIMATED QUANTITIES

ITEM		SUBSTR.	SUPERSTR.	TOTAL
PARTIAL REMOVAL OF SUBSTRUCTURE CONCRETE	LUMP SUM			1
REMOVAL OF EXISTING BRIDGE DECK	SQ. FT.		48237	48237
CLASS 1 EXCAVATION	CU. YD.	1255		1255
CLASS 2 EXCAVATION	CU. YD.	422		422
STRUCTURAL STEEL PILES (10")	LIN. FT.	674		674
STRUCTURAL STEEL PILES (12")	LIN. FT.	450		450
PRE-BORE FOR PILING	LIN. FT.	294		294
PILE POINT REINFORCEMENT	EACH	10		10
CLASS B CONCRETE (SUBSTR.)	CU. YD.	992		992
SLAB ON STEEL	SQ. YD.		8339	8339
* SAFETY BARRIER CURB	LIN. FT.		2133	2133
STRIP SEAL EXPANSION DEVICE	LIN. FT.		140	140
REINFORCING STEEL (BRIDGES)	LB.	121740		121740
REINFORCING STEEL (EPOXY COATED)	LB.	2240		2240
FABRICATED STRUCTURAL CARBON STEEL (PLATE GIRDER)	LB.		827350	827350
SLAB DRAINS	EACH		120	120
EXISTING DIAPHRAGM CONNECTIONS TO FLANGES	LUMP SUM			1

NOTE: CONCRETE ABOVE UPPER CONSTRUCTION JOINT IN BACKWALL AT END BENT NO. 1. (E.B.L. & W.B.L.) IS INCLUDED WITH CLASS B (SUBSTRUCTURE) QUANTITIES.
ALL CONCRETE ABOVE THE LOWER CONSTRUCTION JOINT IN THE END BENT NO. 5 (E.B.L. & W.B.L.) IS INCLUDED WITH THE SUPERSTRUCTURE QUANTITIES.
ALL REINFORCEMENT IN END BENT NO. 1 (E.B.L. & W.B.L.) IS INCLUDED WITH SUBSTRUCTURE QUANTITIES.
ALL REINFORCEMENT IN END BENT NO. 5 (E.B.L. & W.B.L.) IS INCLUDED WITH SUPERSTRUCTURE QUANTITIES.
* SAFETY BARRIER CURB SHALL BE CAST-IN-PLACE OPTION OR SLIP-FORM OPTION.

ESTIMATED QUANTITIES FOR ALTERNATE SLABS

TYPE OF SLABS		SLAB ON STEEL REINF. (LBS.) EPOXY	SLAB ON STEEL REINF. (LBS.) PLAIN	SLAB ON STEEL CONC. (CU. YDS.)
CAST-IN-PLACE CONVENTIONAL FORMS	719830 △1	712820	5910	2112.1
STAY-IN-PLACE FORMS	***	712820	5910	1984.8 **

NOTE: THE TABLE OF ESTIMATED QUANTITIES FOR ALTERNATE SLABS REPRESENTS THE QUANTITIES USED BY THE STATE IN PREPARING THE COST ESTIMATE FOR CONCRETE SLABS. VARIATIONS MAY BE ENCOUNTERED IN THESE ESTIMATED QUANTITIES BUT THESE VARIATIONS CANNOT BE USED FOR AN ADJUSTMENT IN THE CONTRACT UNIT PRICE PER SQUARE YARD OF ALTERNATE SLAB USED.
SEE SPECIAL PROVISIONS FOR ALTERNATE METHODS OF FORMING SLABS.
** DOES NOT INCLUDE CONCRETE REQUIRED TO FILL CORRUGATION OF S.I.P. FORMS.
*** DOES NOT INCLUDE REINFORCING BARS USED AS BAR SUPPORTS.

HYDROLOGIC DATA

DRAINAGE AREA	= 106.7 SQ. MI. (LT. HILLY)
DESIGN DISCHARGE	= 32,000 CFS (FEMA CURVES)
DESIGN HIGH WATER ELEVATION	= 800.2 (100 YEARS)
ESTIMATED BACKWATER	= 0.12 (FT.)

PILE & FOOTING DATA (E.B.L.)

	BENT NO.	1	2	3	4	5
BEARING PILE	PILE TYPE AND SIZE		HP12X53			HP10X42
	NUMBER		12			4
	APPROXIMATE LENGTH FT.		①			68
	DESIGN BEARING TONS		62			54
	HAMMER ENERGY REQ'D FT.-LBS.		14,600			11,800
SPREAD FOOTING	FOUNDATION MATERIAL	ROCK		SHALE		
	DESIGN BEARING TONS/SQ. FT.	5.5		6.0	6.0	

Added △2

MINIMUM ENERGY REQUIREMENT OF HAMMER IS BASED ON PLAN LENGTH AND DESIGN BEARING VALUE OF PILES.
ALL PILES SHALL BE DRIVEN TO PRACTICAL REFUSAL.
MANUFACTURED PILE POINT REINFORCEMENT SHALL BE USED ON ALL PILES IN BENT 5. SEE SPECIAL PROVISION.

① 21' LEFT FOOTING
18" RIGHT FOOTING
18' △2

PILE & FOOTING DATA (W.B.L.)

	BENT NO.	1	2	3	4	5
BEARING PILE	PILE TYPE AND SIZE		HP12X53			HP10X42
	NUMBER		12			6
	APPROXIMATE LENGTH FT.		68			67
	DESIGN BEARING TONS		68			51
	HAMMER ENERGY REQ'D FT.-LBS.		16,200			11,100
SPREAD FOOTING	FOUNDATION MATERIAL	ROCK		SHALE		
	DESIGN BEARING TONS/SQ. FT.	5.5		6.0	6.0	

Added △2

MINIMUM ENERGY REQUIREMENT OF HAMMER IS BASED ON PLAN LENGTH AND DESIGN BEARING VALUE OF PILES.
ALL PILES SHALL BE DRIVEN TO PRACTICAL REFUSAL.
MANUFACTURED PILE POINT REINFORCEMENT SHALL BE USED ON ALL PILES IN BENT 5. SEE SPECIAL PROVISION.

△1 Revised 5/26/94 △2 Revised 7/1/94

DETAILED JUNE 1993
CHECKED AUG. 1993

NOTE: THIS DRAWING IS NOT TO SCALE. FOLLOW DIMENSIONS.

JACKSON COUNTY A-610R1

297

STATE	PROJ. NO.	SHEET NO.
MO.		300

ELEV. 858.0

DARK BROWN SILTY CLAY, WITH BOULDERS, MOIST.

ELEV. 853.4

WEATHERED GRAY CLAY SHALE.

ELEV. 849.9

LIGHT GRAY LIMESTONE, THIN BEDDED, FINE GRAINED, VUGGY, MODERATELY HARD (CHERT SEAM AT 12.9').

ELEV. 839.6

1

(CORE)

ELEV. 810.0

BROWN SILTY CLAY, MOIST.

ELEV. 808.5

BROWN SILTY CLAY WITH GRAVEL, BOULDERS, MOIST.

ELEV. 796.0

LIGHT BROWN SHALE, DRY.

ELEV. 787.9

2

STANDARD PENETRATION TEST

DEPTH	BLOWS/6"
18'	100 IN 4"
23.4'	100 IN 5"
28.9'	100 IN 5"

ELEV. 783.3

DARK GRAY SILTY CLAY, MOIST.

ELEV. 772.2

DARK GRAY SILTY CLAY WITH SOME COBBLES AND GRAVEL. (LIMESTONE LAYER FROM 13.0-14.0').

ELEV. 769.3

DARK GRAY SILTY CLAY, MOIST.

ELEV. 765.9

GRAY CLAY SHALE.

ELEV. 754.4

3

STANDARD PENETRATION TEST

DEPTH	BLOWS/6"
5'	4-7-8
10'	2-2-3
15'	5-13-9
19'	100 IN 6"
25'	100 IN 5"
30.5'	100 IN 3"

ELEV. 785.7

DARK GRAY, SILTY CLAY, STIFF TO VERY STIFF, MOIST.

ELEV. 776.7

GRAY BROWN CLAYEY SILT WITH SOME SAND, SOFT TO MEDIUM STIFF, MOIST.

ELEV. 771.2

GRAY BROWN SILTY CLAY WITH SOME GRAVEL, SCATTERED COBBLES AND LIMONITE STAINING, MOIST.

ELEV. 767.4

GRAY CLAY SHALE, VERY STIFF.

ELEV. 755.2

4

ELEV. 837.0

DARK BROWN SILTY CLAY, MOIST.

ELEV. 830.5

DARK GRAY CLAY SHALE FILL.

ELEV. 797.0

COBBLES AND BOULDERS (FILL).

ELEV. 796.0

BOULDERS (FILL). REFUSAL AT 44.8'.

ELEV. 792.2

5

BORING DATA

NOTE: FOR LOCATION OF BORINGS SEE SHEET NO. 1. BORING DATA FOR ALL LOCATIONS IS AVAILABLE UPON REQUEST FROM THE DISTRICT OFFICE.

REVISED:

DETAILED JUNE 1993
CHECKED JUNE 1993

NOTE: THIS DRAWING IS NOT TO SCALE. FOLLOW DIMENSIONS.

JACKSON COUNTY

A-610R1