# MISSOURI STATE HIGHWAY DEPARTMENT

| FED. ROAD DIST. NO. | STATE | FED. AID PROJ. NO. | FISCAL YEAR | SHEET NO. | TOTAL SHEETS |
|---|---|---|---|---|---|
| 5 | MO. | | 19 | 139 | |

Twin 62.03'-80.04'-62.04' Cont. Concrete Box Girder Spans

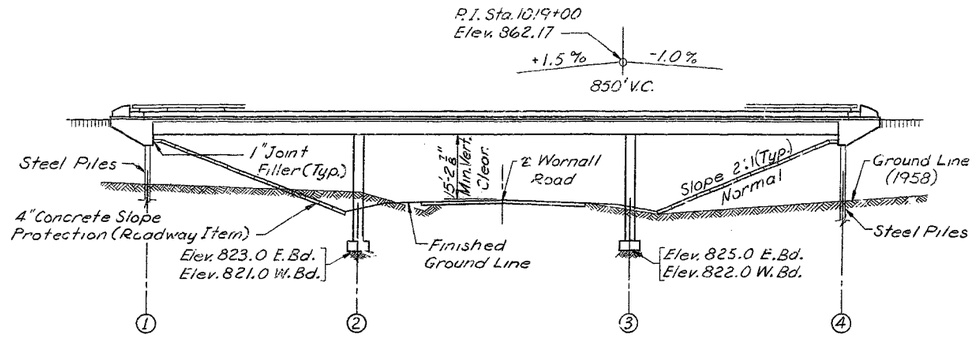


## GENERAL ELEVATION

| ESTIMATED QUANTITIES | | | | |
|---|---|---|---|---|
| Item | | Substr. | Superstr. | Total |
| Class 1 Excavation for Structures | Cu. Yd. | 285 | — | 285 |
| 10" Steel Piles in Place | Lin. Ft. | 798 | — | 798 |
| 10" Steel Pile Cut Offs | Lin. Ft. | 72 | — | 72 |
| Class B Concrete | Cu. Yd. | 27.8 | — | 27.8 |
| Class B1 Concrete | Cu. Yd. | — | 1507.4 | 1507.4 |
| Reinforcing Steel | Lb. | 250 | 545,400 | 545,650 |
| Bridge Rail (Single Tube Type) | Lin. Ft. | — | 854 | 854 |

QUANTITY NOTES:

All concrete and reinforcement above footings is included in superstructure quantities.

No payment for excavation will be allowed at End Bents Nos. 1 & 4.

Payment for furnishing and installing access doors and frames shall be made and considered fully covered under price bid for other items.

MISCELLANEOUS NOTES:

Compacted roadway fill (full roadway width) shall be placed up to elevation of bottom of concrete beam in front of and not less than 25'-0" in back of End Bents before steel piles are driven.

Lengths of Structures, fill face to fill face of end bents, along ℄ of structures are 206'-10" for Eastbound and 206'-7 1/4" for Westbound.

For Boring Data see Sheet No. 2 of 13.

⊗ Indicates location of boring.

## GENERAL NOTES:

DESIGN SPECIFICATIONS: A.A.S.H.O. - 1961

DESIGN LOADING:

HS 20-44; 15#/sq. ft. Future Wearing Surface; Modified 24,000# Tandem Axle; Earth 120#; Equivalent Fluid Pressure 30#.

DESIGN UNIT STRESSES:

Class B Concrete (substructure) fc = 1,200 p.s.i.
Class B1 Concrete (superstructure) fc = 1,600 p.s.i.
Reinforcing Steel fs = 20,000 p.s.i.
Structural Steel (A.S.T.M. A36-62T) fs = 20,000 p.s.i.
Steel Pile (A.S.T.M. A36-62T) fb = 9,000 p.s.i.

SURFACE SEAL: Superstructure deck to be surface sealed.

PAINTING:

Structural Steel access doors shall be cleaned and painted in the field or may be cleaned and painted one coat of red lead in the shop with the two remaining coats applied in the field except that final coat on access doors and frames shall be gray. In lieu of painting, the contractor may, if he prefers, galvanize this material. All galvanizing shall be done after fabrication. Cost of painting or galvanizing to be included in price bid for other items.

FALSEWORK:

Falsework over existing lanes shall be constructed with a minimum vertical clearance of 13'-0" from crown of existing lanes and a minimum lateral clearance of 26'-0" centered on existing lanes.

| FOOTING AND PILE DATA | | | | | | | | |
|---|---|---|---|---|---|---|---|---|
| BENT NO. | | 1 | | 2 | | 3 | | 4 |
| LANES | | E.Bd. | W.Bd. | | | | E.Bd. | W.Bd. |
| SPREAD FOOTINGS | Foundation Material | | | Rock | | Rock | | |
| | Design Bearing Tons/Sq. Ft. | | | 11.3 | | 11.3 | | |
| BEARING PILE | Pile Type & Size | 10BP42 | | | | | 10BP42 | |
| | Number | 6 | 6 | | | | 6 | 6 |
| | Approximate Length Ft. | 35 | 40 | | | | 35 | 35 |
| | Design Bearing Value Tons | 50 | 50 | | | | 50 | 50 |
| | * Hammer Energy Req'd. Ft.Lbs. | 11,200 | | | | | 11,200 | |

FOOTING AND PILE NOTES:

Footings shall be carried 6" into hard, solid, undisturbed rock or 18' to soft rock or shale and cast against vertical faces of same.

* Minimum Energy Requirement of hammer, based on plan length and design bearing value of pile. All pile shall be driven to practical refusal at 1.9 times the design bearing value.

Note. For location of existing utility conduits see Road Plans.

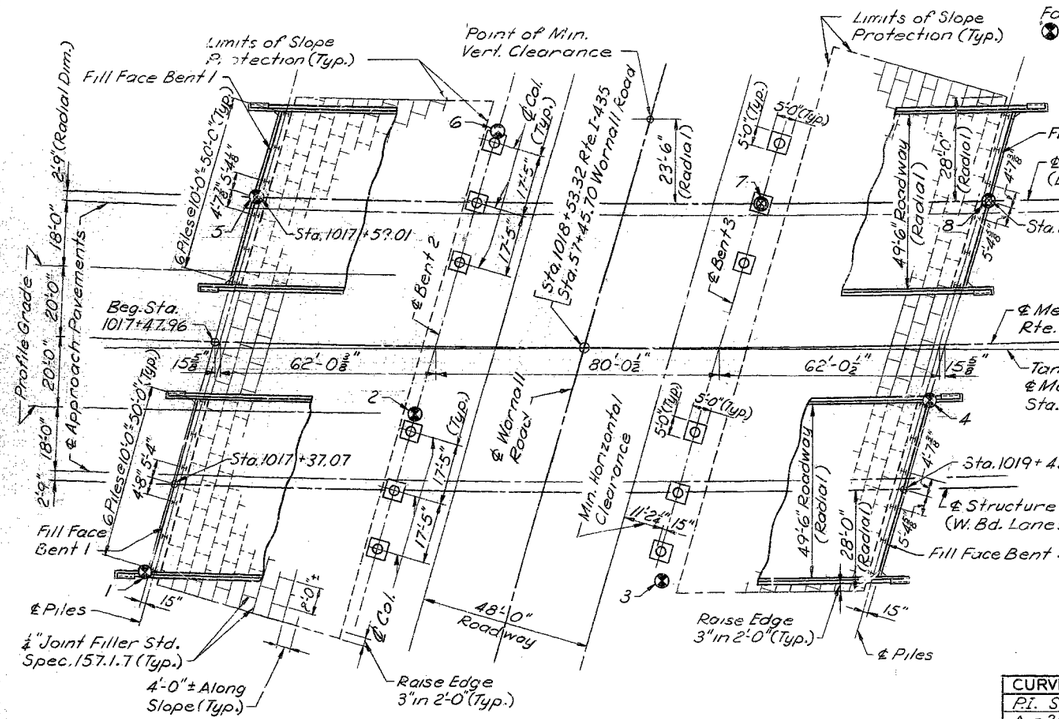


## PLAN

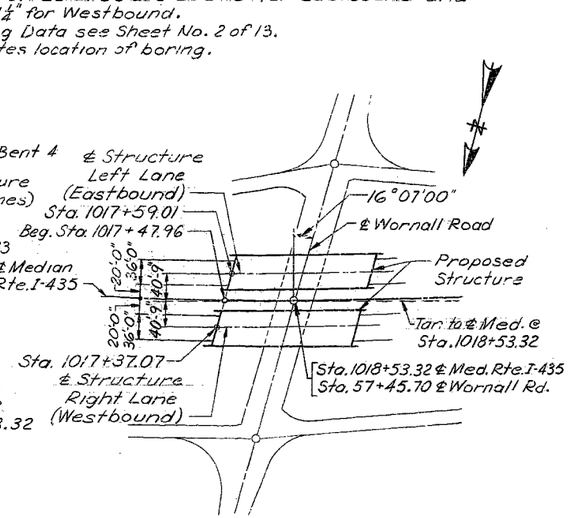


## LOCATION SKETCH

| CURVE DATA (RTE. I-435) |
|---|
| P.I. Sta. 1014+50.4 |
| Δ = 25°14' Lt. |
| D = 1° |
| T = 1282.48' |
| L = 2523.33' |
| R = 5729.65' |
| S.E. = .025 ft./ft. |
| W. = 0 |

BENCH MARK:

B.M. #106 Elev. 814.11

□ in S.W. Wing Bridge over Indian Creek on Wornall Road 300'± Rt. Sta. 1016+00

STATE OF MISSOURI — EUGENE L. FIELDHAMMER — NUMBER E-10795 — REGISTERED PROFESSIONAL ENGINEER

SUBMITTED BY E. L. Hall

REGISTERED PROFESSIONAL ENGINEER

MISSOURI NO. E-10795

**BRIDGE** OVER WORNALL ROAD

**STATE ROAD** INTERSTATE ROUTE 435

**ABOUT** 5 MILES NORTH OF MARTIN CITY

**PROJECT NO.** I-IG-435-1(53) (RTE. I-435) **STA.** 1017+59.01 E.B. LANE; 1017+37.07 W.B. LANE

JACKSON **COUNTY**

SUBMITTED BY D. B. Jenkins, BRIDGE ENGINEER DATE 5/20/66

APPROVED BY M. G. Smith, CHIEF ENGINEER DATE 5/20/66

STD. 54.00

A-1240

DESIGNED NOV. 1965 BY R. PARIKH

DETAILED OCT. 1965 BY VIEHLAND

CHECKED NOV. 1965 BY J. PARIKH

R. W. BOOKER & ASSOCIATES, INC.
CONSULTING ENGINEERS
215 NORTH ELEVENTH ST.
ST. LOUIS 1, MISSOURI

Note: This drawing is not to scale. Follow dimensions.

Sheet No. 1 of 13.

253

# MISSOURI STATE HIGHWAY DEPARTMENT

| FED. ROAD DIST. NO. | STATE | FED. AID PROJ. NO. | FISCAL YEAR | SHEET NO. | TOTAL SHEETS |
|---|---|---|---|---|---|
| 5 | MO. | | 19 | 146 | |

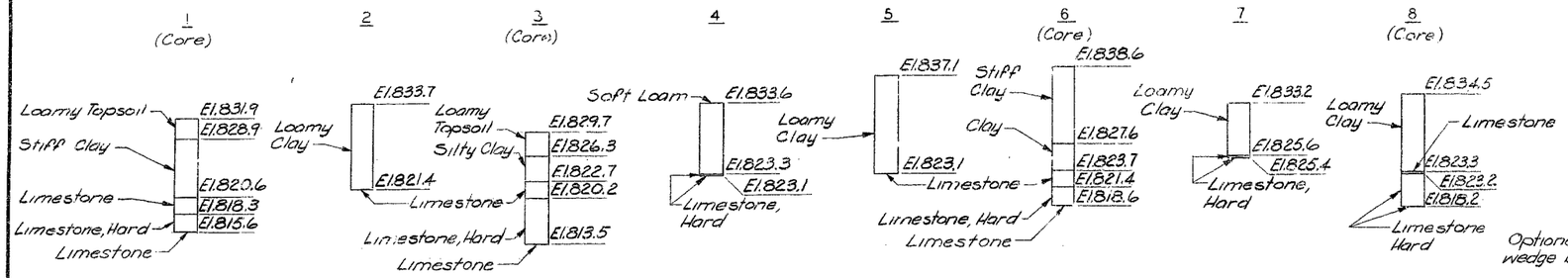


NOTE:
Core Drill Equipment: 2 1/8" Double Tube Core Bbl.

BORING DATA

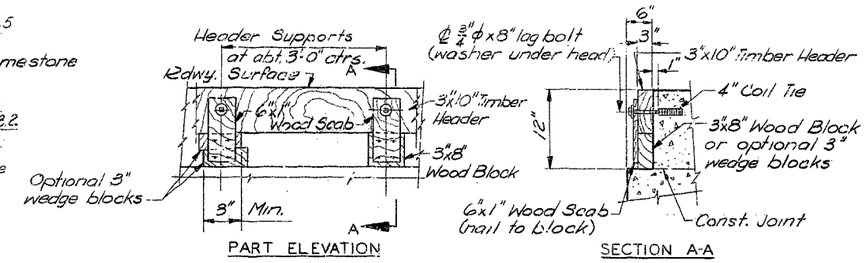


TIMBER HEADER DETAIL

NOTE:
Cost of timber headers complete in place to be included in price bid for concrete.

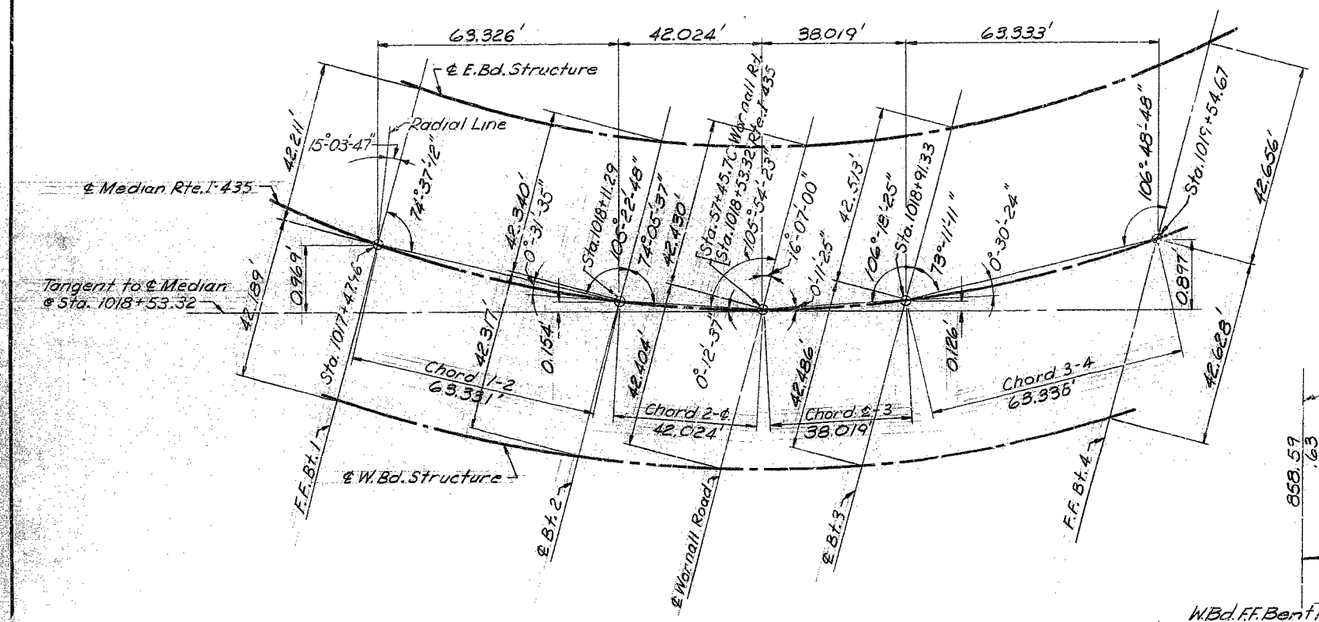


LAYOUT PLAN

NOTE:
Bents cannot be accurately located from the re[illegible] on the [illegible]gent by conv[illegible] survey methods based on 100' chords (All Bents are parallel).

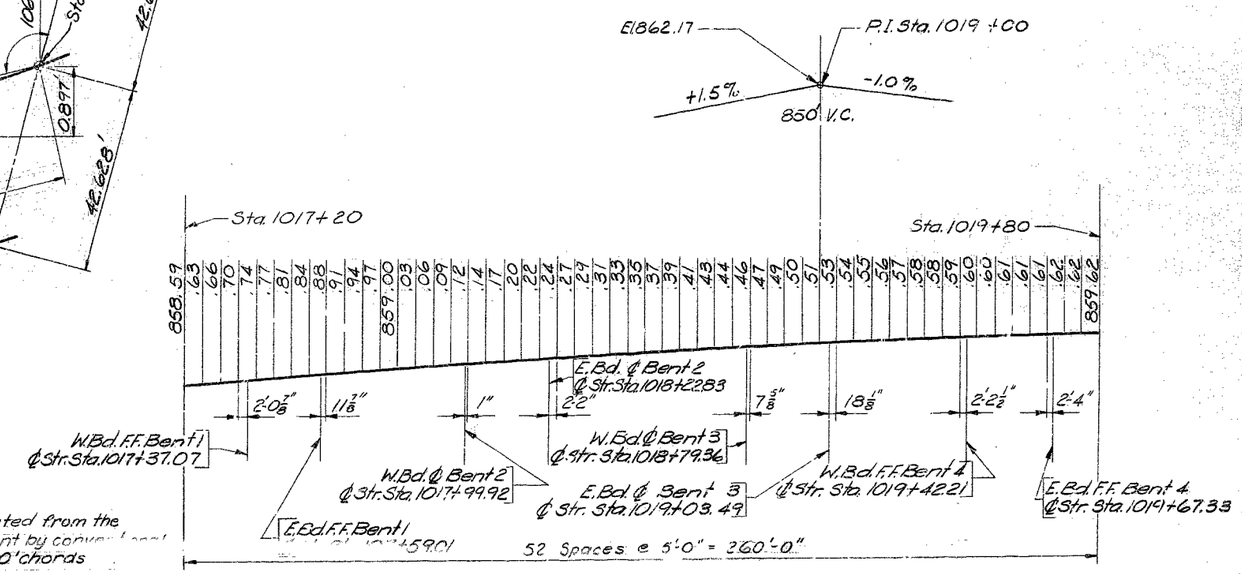


PROFILE GRADE ELEVATIONS

**BRIDGE OVER WORNALL ROAD**

**STATE ROAD** INTERSTATE ROUTE 435

**ABOUT** 5 MILES NORTH OF MARTIN CITY

**PROJECT NO.** I-IG-435-1(63)(RTE. I-435) **STA.** 1017+59.01 E.B. LANE, 1017+37.07 W.B. LANE

JACKSON COUNTY

DETAILED SEP. 1965 BY HERD
CHECKED NOV. 1965 BY J. PARIKH

R. W. BOOKER & ASSOCIATES, INC.
CONSULTING ENGINEERS
215 NORTH ELEVENTH ST.
ST. LOUIS 1, MISSOURI

Note: This drawing is not to scale. Follow dimensions.

Sheet No. 2 of 13.

A-1240

NO CONSTRUCTION CHANGES

254

# MISSOURI STATE HIGHWAY DEPARTMENT

| FED. ROAD DIST. NO. | STATE | FED. AID PROJ. NO. | FISCAL YEAR | SHEET NO. | TOTAL SHEETS |
|---|---|---|---|---|---|
| 5 | MO. | | 19 | 141 | |

## COMPLETE BILL OF REINFORCING STEEL

| NO. | SIZE | LENGTH | MARK | LOCATION |
|---|---|---|---|---|
| SUPERSTRUCTURE (E.Bd.&W.Bd.) | | | | |
| 1560 | #6 | 30'-6" | S1 | Top Slab |
| 1560 | #6 | 25'-6" | S2 | " |
| 256 | #5 | 41'-0" | S3 | " |
| 256 | #11 | 42'-3" | S4 | " |
| 240 | #11 | 22'-6" | S5 | " |
| 128 | #5 | 40'-9" | S6 | " |
| 744 | #5 | 35'-9" | S7 | " |
| | | | | |
| 232 | #10 | 52'-0" | S9 | Bott. Slab |
| 216 | #8 | 37'-6" | S10 | " |
| 232 | #5 | 25'-3" | S11 | " |
| 116 | #10 | 57'-6" | S12 | " |
| 108 | #9 | 44'-6" | S13 | " |
| 48 | #6 | 6'-0" | S14 | " |
| 522 | #5 | 27'-9" | S15 | " |
| 522 | #5 | 22'-9" | S16 | " |
| 840 | #4 | 3'-6" | G5 | Diaphragms |
| 112 | #4 | 25'-0" | G19 | " |
| | | | | |
| 1248 | #5 | 7'-0" | G6 | Webs |
| 3264 | #6 | 7'-0" | G7 | " |
| 16 | #8 | 34'-0" | G8 | " |
| 24 | #8 | 59'-0" | G9 | " |
| 16 | #8 | 42'-6" | G10 | " |
| 32 | #8 | 31'-0" | G11 | " |
| 32 | #8 | 40'-6" | G12 | " |
| 16 | #5 | 33'-3" | G13 | " |
| 48 | #5 | 30'-3" | G14 | " |
| 16 | #5 | 41'-9" | G15 | " |
| 32 | #5 | 31'-0" | G16 | " |
| 32 | #5 | 39'-9" | G17 | " |
| 192 | #5 | 8'-0" | G18 | " |
| | | | | |
| 48 | #5 | 4'-9" | R1 | End Post |
| 8 | #5 | 5'-6" | R2 | " |
| 8 | #5 | 6'-3" | R3 | " |
| 8 | #5 | 6'-9" | R4 | " |
| 8 | #5 | 7'-0" | R5 | " |
| 16 | #5 | 7'-3" | R6 | " |
| 1026 | #5 | 5'-3" | R7 | Parapet |
| 16 | #5 | 5'-3" | R8 | " |
| 64 | #5 | 27'-3" | R9 | " |
| 64 | #5 | 9'-6" | R10 | " |
| 32 | #5 | 30'-9" | R11 | " |
| 16 | #5 | 4'-6" | R12 | " |
| | | | | |
| 820 | #5 | 3'-5" | C1 | Curb |
| 74 | #5 | 3'-9" | C2 | " |
| 8 | #6 | 7'-0" | C3 | " |
| 16 | #5 | 32'-3" | C4 | " |
| 24 | #5 | 27'-6" | C5 | " |
| 8 | #6 | 8'-3" | C6 | " |
| 16 | #6 | 32'-6" | C7 | " |
| | | | | |
| SUPERSTR. INT. BT. 2 (E.Bd.&W.Bd.) | | | | |
| | | | | |
| 14 | #11 | 51'-0" | G1 | Beam |
| 18 | #9 | 48'-6" | G2 | " |
| 4 | #11 | 12'-6" | G3 | " |
| 8 | #6 | 48'-6" | G4 | " |
| 244 | #5 | 9'-9" | U2 | " |
| 185 | #3 | 7'-9" | V1 | Columns |
| 8 | #9 | 31'-3" | V2 | " |
| 8 | #9 | 31'-9" | V4 | " |
| 8 | #9 | 32'-3" | V6 | " |
| 8 | #9 | 34'-0" | V8 | " |
| 8 | #9 | 34'-6" | V10 | " |
| 8 | #9 | 35'-0" | V11 | " |

| NO. | SIZE | LENGTH | MARK | LOCATION |
|---|---|---|---|---|
| SUPERSTR. INT. BT. 3 (E.Bd.&W.Bd.) | | | | |
| 14 | #11 | 51'-0" | G1 | Beam |
| 18 | #9 | 48'-6" | G2 | " |
| 4 | #11 | 12'-6" | G3 | " |
| 8 | #6 | 48'-6" | G4 | " |
| 244 | #5 | 9'-9" | U2 | " |
| 185 | #3 | 7'-9" | V1 | Columns |
| 8 | #9 | 31'-3" | V2 | " |
| 8 | #9 | 31'-9" | V4 | " |
| 8 | #9 | 32'-3" | V6 | " |
| 8 | #9 | 34'-0" | V8 | " |
| 8 | #9 | 34'-6" | V10 | " |
| 8 | #9 | 35'-0" | V11 | " |
| | | | | |
| SUPERSTR. END BT. 1 & 4 (E.Bd.&W.Bd.) | | | | |
| 40 | #6 | 53'-6" | H1 | Beam |
| 40 | #6 | 54'-0" | H2 | " |
| 256 | #6 | 8'-0" | S8 | " |
| 392 | #5 | 10'-9" | U1 | " |
| | | | | |
| 24 | #6 | 8'-6" | H3 | Wings |
| 24 | #6 | 6'-6" | H4 | " |
| 48 | #6 | 15'-0" | H5 | " |
| 16 | #6 | 10'-9" | H6 | " |
| 56 | #4 | 9'-0" | V12 | " |
| 32 | #4 | 7'-9" | V13 | " |
| 16 | #6 | 14'-6" | T1 | " |
| | | | | |
| SUBSTRUCTURE INT. BENTS | | | | |
| | | | | |
| 96 | #5 | 2'-6" | D1 | Footing |

| NO. | SIZE | LENGTH | MARK | LOCATION |
|---|---|---|---|---|
| | | | | |

## BENDING SKETCHES & CUTTING DIAGRAMS

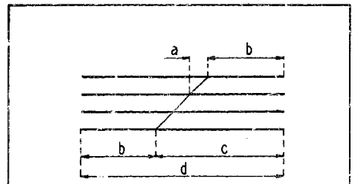


### CUTTING SCHEDULE

| REMARKS | a | b | c | d |
|---|---|---|---|---|
| 6 H5 Cut 48 | 14" | 4'-7" | 10'-5" | 15'-0" |
| 7 V12 Cut 56 | 10" | 2'-0" | 7'-0" | 9'-0" |

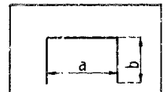


| MARK | a | b |
|---|---|---|
| G6 | 3'-8 1/4" | 19 7/8" |
| U1 | 2'-2 1/2" | 4'-3 1/4" |
| C2 | 12 3/4" | 16 1/8" |

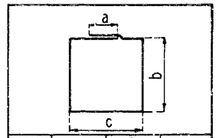


| MARK | a | b | c |
|---|---|---|---|

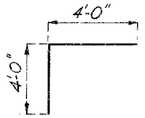


S8

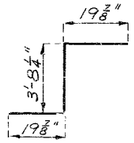


G7

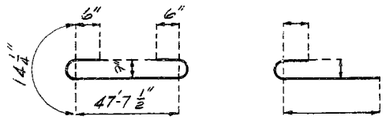


G1

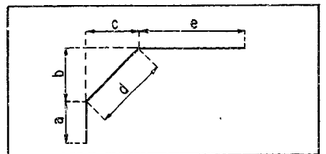


| MARK | a | b | c | d | e |
|---|---|---|---|---|---|
| T1 | 18" | 6'-2" | 7'-4" | 9'-7" | 3'-5" |

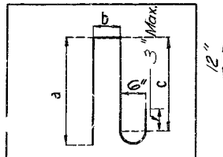


| MARK | a | b | c |
|---|---|---|---|
| R2 | 2'-1" | 7 1/8" | 22" |
| R3 | 2'-5 1/2" | 7 1/8" | 2'-2 1/2" |
| R4 | 2'-8 1/2" | 7 1/8" | 2'-5 1/2" |
| R5 | 2'-10" | 7 1/8" | 2'-7" |
| R6 | 2'-11 1/4" | 7 1/8" | 2'-8 1/4" |
| R7 | 23 1/2" | 7 1/8" | 20 1/2" |

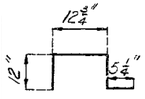


C1

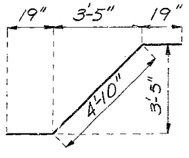


G18

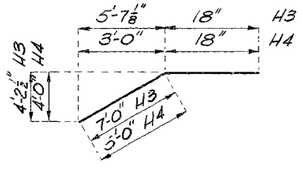


H3-H4

V1

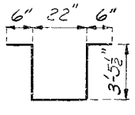


U2

**BRIDGE** OVER WORNALL ROAD

**STATE ROAD** INTERSTATE ROUTE 435

**ABOUT** 5 MILES NORTH OF MARTIN CITY

**PROJECT NO.** I-IG-435-1(63)(RTE I-435) **STA.** 1017+59.21 E.B. LANE 1017+37.07 W.B. LANE

JACKSON **COUNTY**

255

| No. 904 | Revised |
|---|---|
| Aug. 1963 | Dec. 1964 |

DETAILED NOV. 1965 BY HERD

CHECKED NOV. 1965 BY J. PARIKH

Note: This drawing is not to scale. Follow dimensions.

Sheet No. 3 of 13.

A-1240

# MISSOURI STATE HIGHWAY DEPARTMENT

| FED. ROAD DIST. NO. | STATE | FED. AID PROJ. NO. | FISCAL YEAR | SHEET NO. | TOTAL SHEETS |
|---|---|---|---|---|---|
| 5 | MO. | | 19 | 142 | |

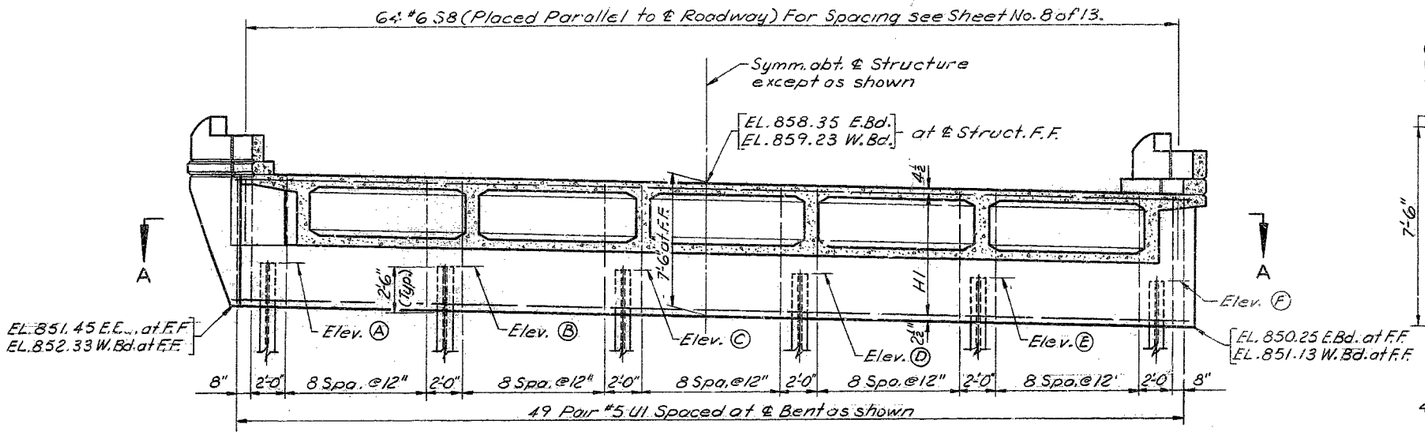


ELEVATION

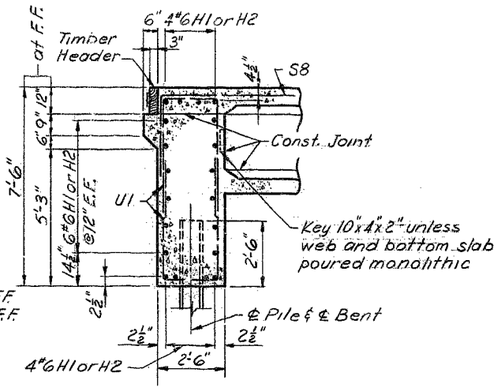


SECTION AT ℄

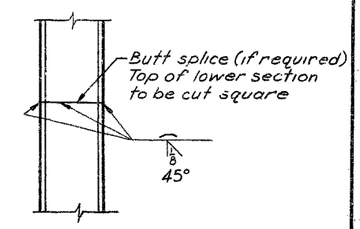


STEEL PILE SPLICE

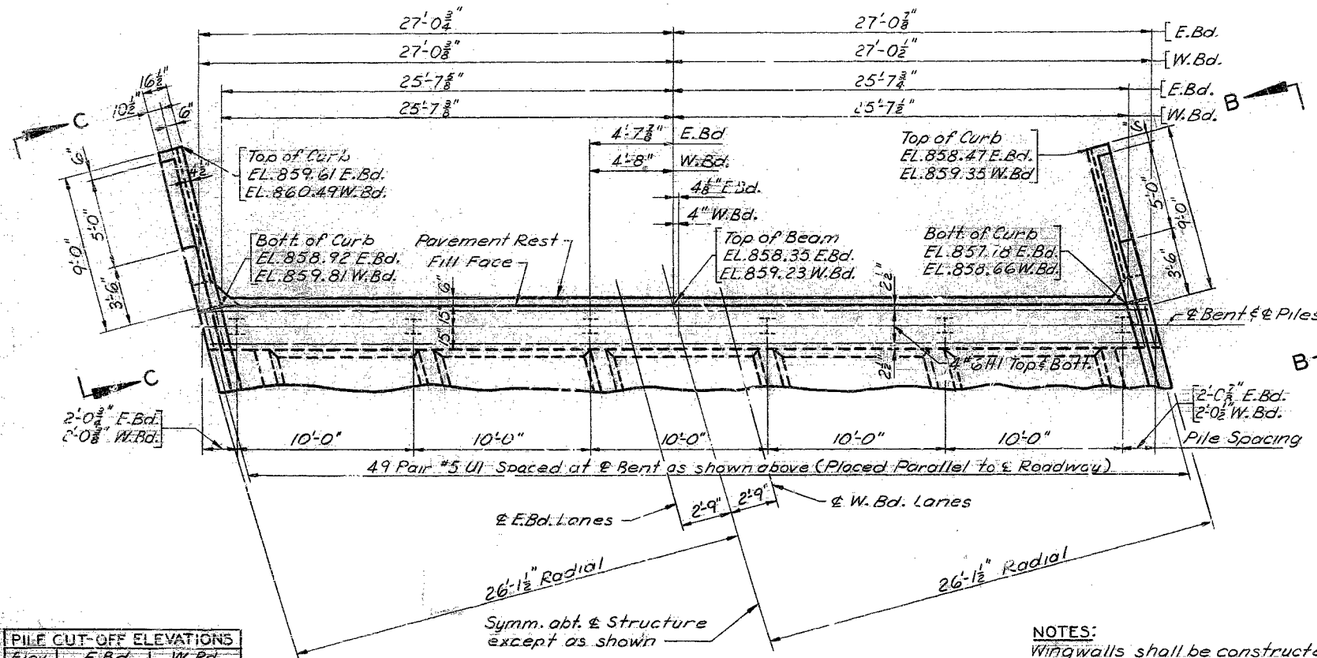


PLAN

END BENT 1

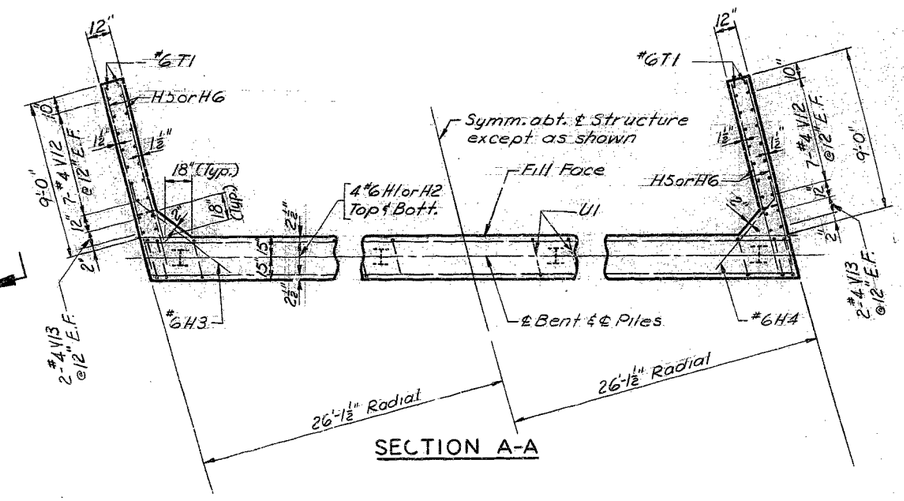


SECTION A-A

| PILE CUT-OFF ELEVATIONS | | |
|---|---|---|
| Elev. | E.Bd. | W.Bd. |
| A | 853.91 | 854.79 |
| B | 853.69 | 854.57 |
| C | 853.46 | 854.35 |
| D | 853.24 | 854.12 |
| E | 853.01 | 853.90 |
| F | 852.79 | 853.68 |

NOTES:
Wingwalls shall be constructed on a horizontal curve. For offsets, see Sheet No. 12 of 13.
For Timber Header Detail, see Sheet No. 2 of 13.
Fill at end bent No. 1 shall not be carried above bottom of beam and wings until adjacent superstructure span is in place.
For Elevations B-B, and C-C, see Sheet No. 5 of 13.
For reinforcement in Curb, Parapet and End Post, see Sheet No. 13 of 13.

**BRIDGE** OVER WORNALL ROAD
**STATE ROAD** INTERSTATE ROUTE 435
**ABOUT** 5 MILES NORTH OF MARTIN CITY
**PROJECT NO.** I-IG-435-1(53) (RTE. I-435) **STA.** 1017+59.01 E.B. LANE, 1017+37.07 W.B. LANE
JACKSON **COUNTY**

DETAILED OCT. 1965 BY VIEHLAND
CHECKED NOV. 1965 BY J. PARIKH

R. W. BOOKER & ASSOCIATES, INC.
CONSULTING ENGINEERS
215 NORTH ELEVENTH ST.
ST. LOUIS 1, MISSOURI

Note: This drawing is not to scale. Follow dimensions.

Sheet No. 4 of 13.

A-1240

NO CONSTRUCTION CHANGES

256

# MISSOURI STATE HIGHWAY DEPARTMENT

| FED. ROAD DIST. NO. | STATE | FED. AID PROJ. NO. | FISCAL YEAR | SHEET NO. | TOTAL SHEETS |
|---|---|---|---|---|---|
| 5 | MO. | | 19 | 143 | |

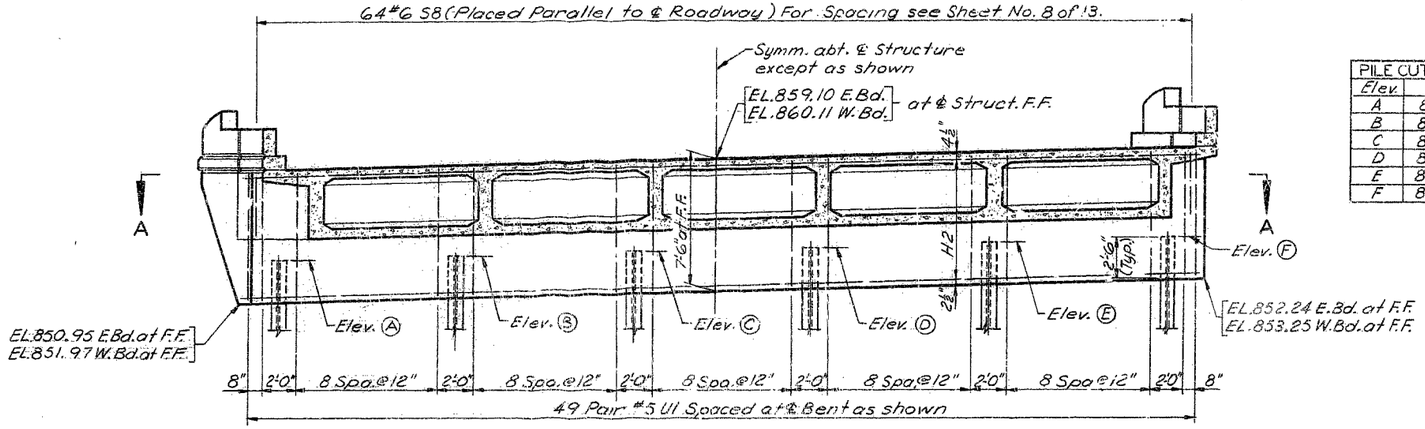


ELEVATION

| PILE CUT-OFF ELEVATIONS | | |
|---|---|---|
| Elev. | E.Bd. | W.Bd. |
| A | 853.50 | 854.52 |
| B | 853.74 | 854.76 |
| C | 853.98 | 854.99 |
| D | 854.21 | 855.23 |
| E | 854.45 | 855.46 |
| F | 854.69 | 855.70 |

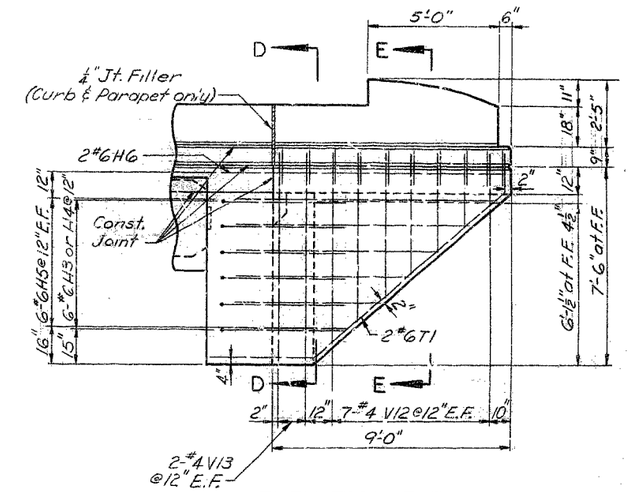


ELEVATION B-B
(Elev. C-C Opposite hand)

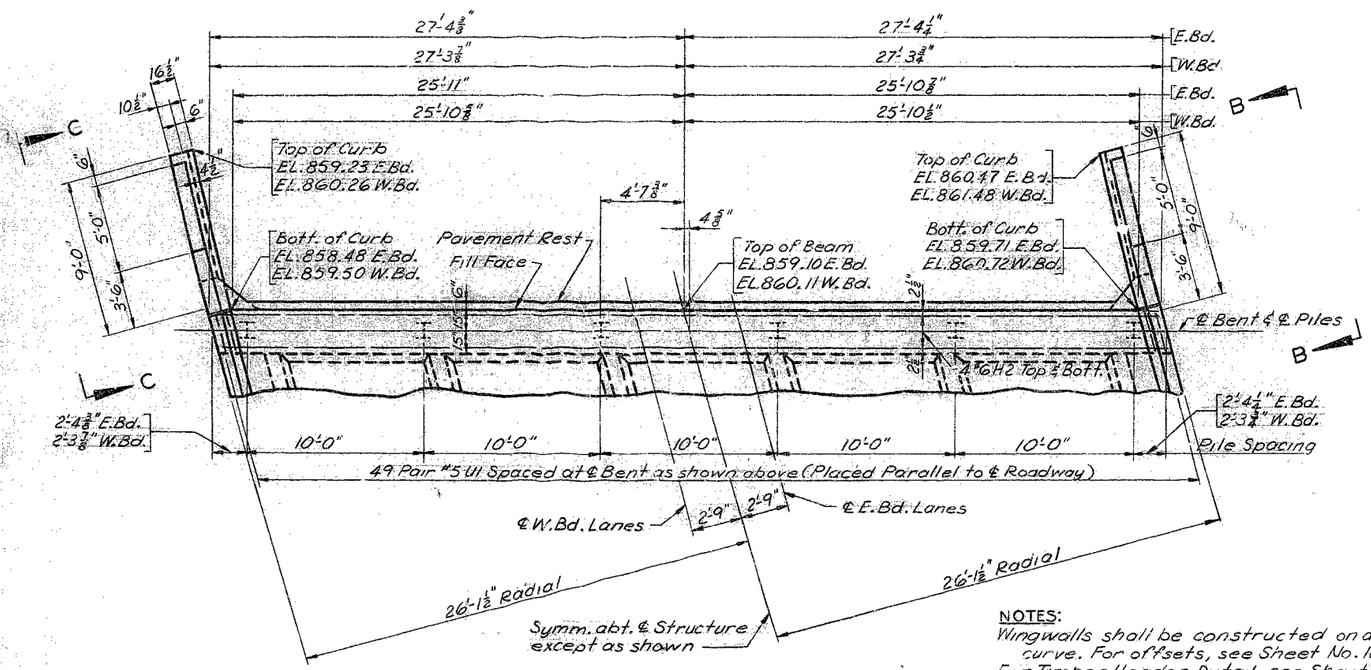


PLAN

END BENT 4

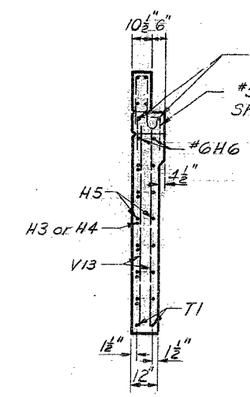


SECTION D-D

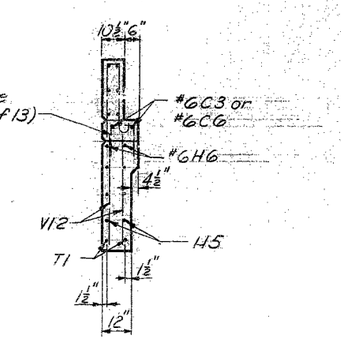


SECTION E-E

NOTES:

Wingwalls shall be constructed on a horizontal curve. For offsets, see Sheet No. 12 of 13.
For Timber Header Detail, see Sheet No. 2 of 13.
Fill at end bent No. 4 shall not be carried above bottom of beam and wings until adjacent superstructure span is in place.
For Section A-A, Steel Pile Splice and Section at ℄, see Sheet No. 4 of 13.
For reinforcement in Curb, Parapet and End Post, see Sheet No. 13 of 13.

**BRIDGE** OVER WORNALL ROAD
**STATE ROAD** INTERSTATE ROUTE 435
**ABOUT** 5 MILES NORTH OF MARTIN CITY
**PROJECT NO.** I-IG-435-1(53)(RTE. I-435) **STA.** 1017+59.01 E.B. LANE, 1017+37.07 W.B. LANE
JACKSON **COUNTY**

DETAILED OCT. 1965 BY VIEHLAND
CHECKED NOV. 1965 BY J. PARIKH

R. W. BOOKER & ASSOCIATES, INC.
CONSULTING ENGINEERS
215 NORTH ELEVENTH ST.
ST. LOUIS 1, MISSOURI

Note: This drawing is not to scale. Follow dimensions.

Sheet No. 5 of 13.

A-1240

NO CONSTRUCTION CHANGES

257

# MISSOURI STATE HIGHWAY DEPARTMENT

| FED. ROAD DIST. NO. | STATE | FED. AID PROJ. NO. | FISCAL YEAR | SHEET NO. | TOTAL SHEETS |
|---|---|---|---|---|---|
| 5 | MO. | | 19 | 144 | |

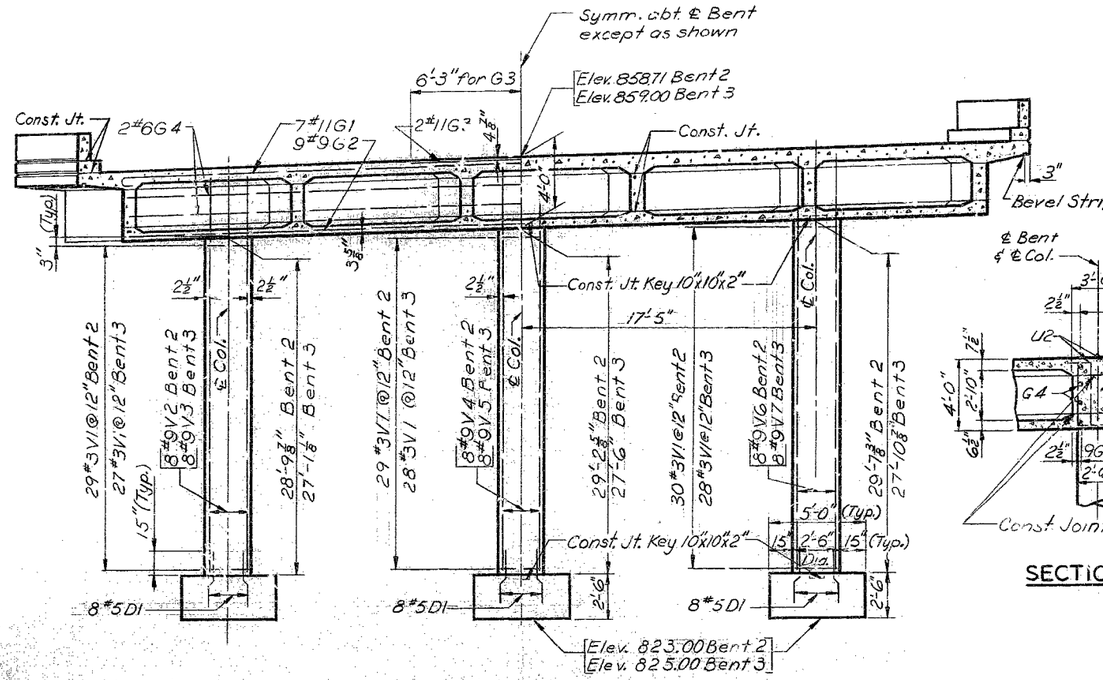


ELEVATION

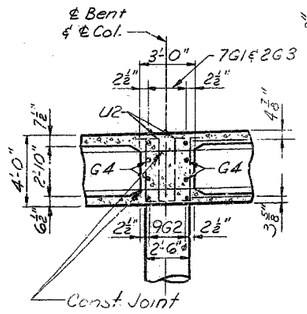


SECTION AT ℄

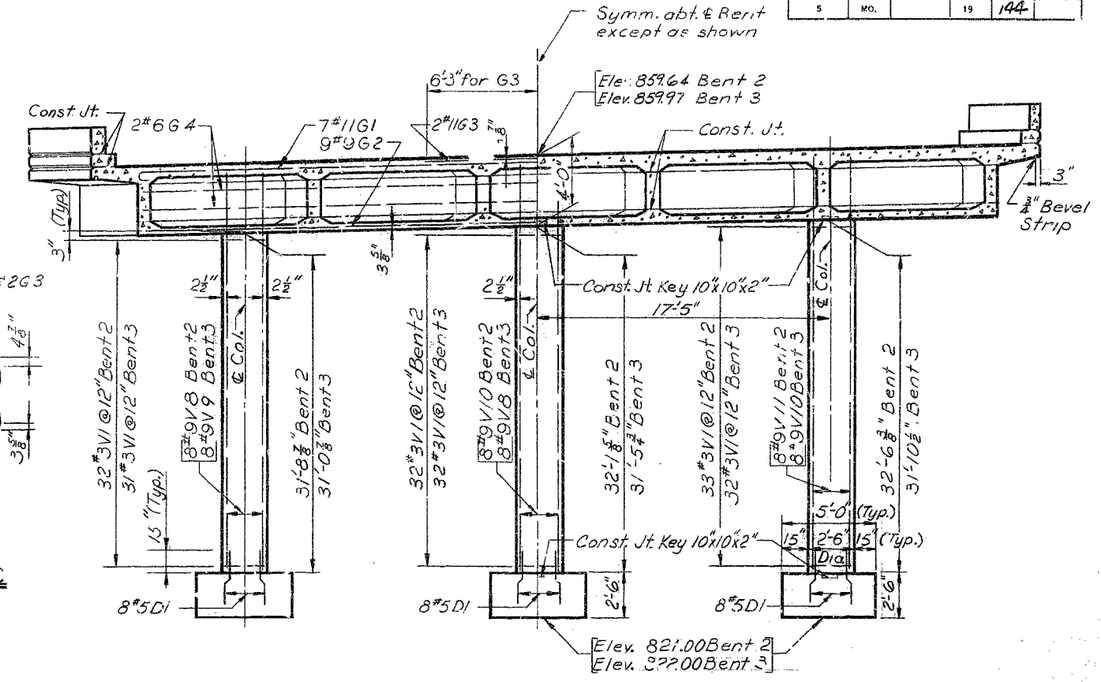


ELEVATION

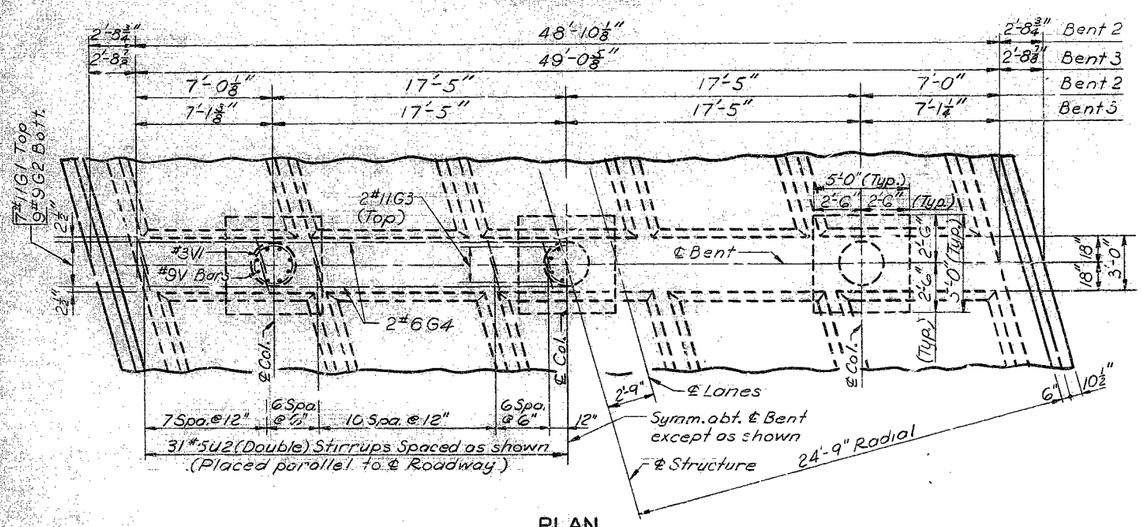


PLAN
EASTBOUND

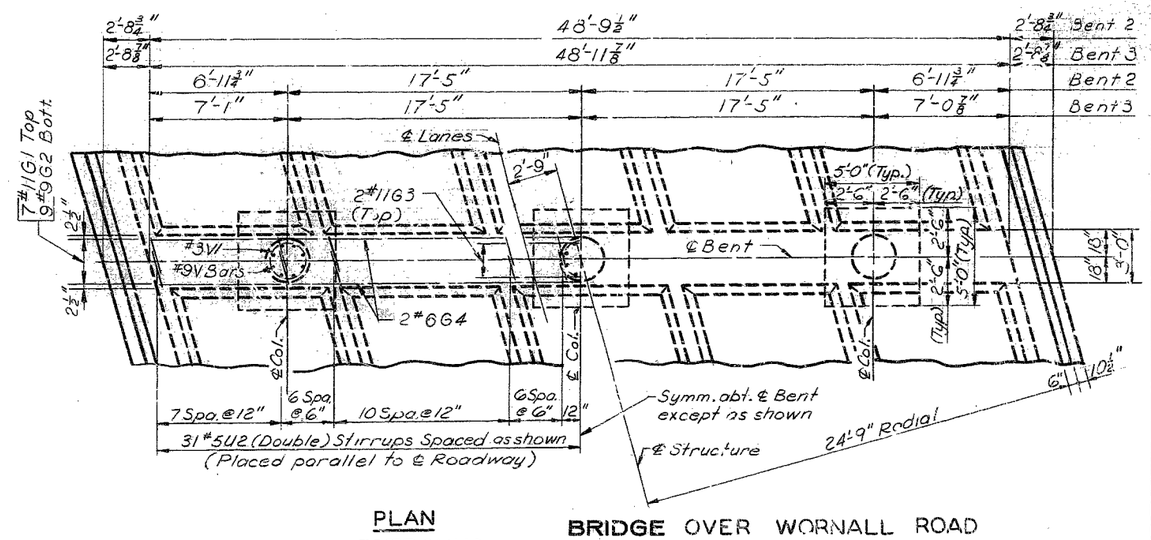


PLAN
WESTBOUND

INT. BENTS NO. 2 & 3

**BRIDGE** OVER WORNALL ROAD

**STATE ROAD** INTERSTATE ROUTE 435

**ABOUT** 5 MILES NORTH OF MARTIN CITY

**PROJECT** NOT-IG-435-1(53) (RTE. I-435) **STA.** 1017+59.01 E.B. LANE
1017+37.07 W.B. LANE

JACKSON COUNTY

A-1240

DETAILED SEPT. 1965 BY HOHLT
CHECKED NOV. 1965 BY J. PARIKH

R. W. BOOKER & ASSOCIATES, INC.
CONSULTING ENGINEERS
215 NORTH ELEVENTH ST.
ST. LOUIS 1, MISSOURI

*Note: This drawing is not to scale. Follow dimensions.*

Sheet No. 6 of 13.

SEE FINAL PLANS BROWN-LINES

258

# MISSOURI STATE HIGHWAY DEPARTMENT

| FED. ROAD DIST. NO. | STATE | FED. AID PROJ. NO. | FISCAL YEAR | SHEET NO. | TOTAL SHEETS |
|---|---|---|---|---|---|
| 5 | MO. | | 19 | 145 | |

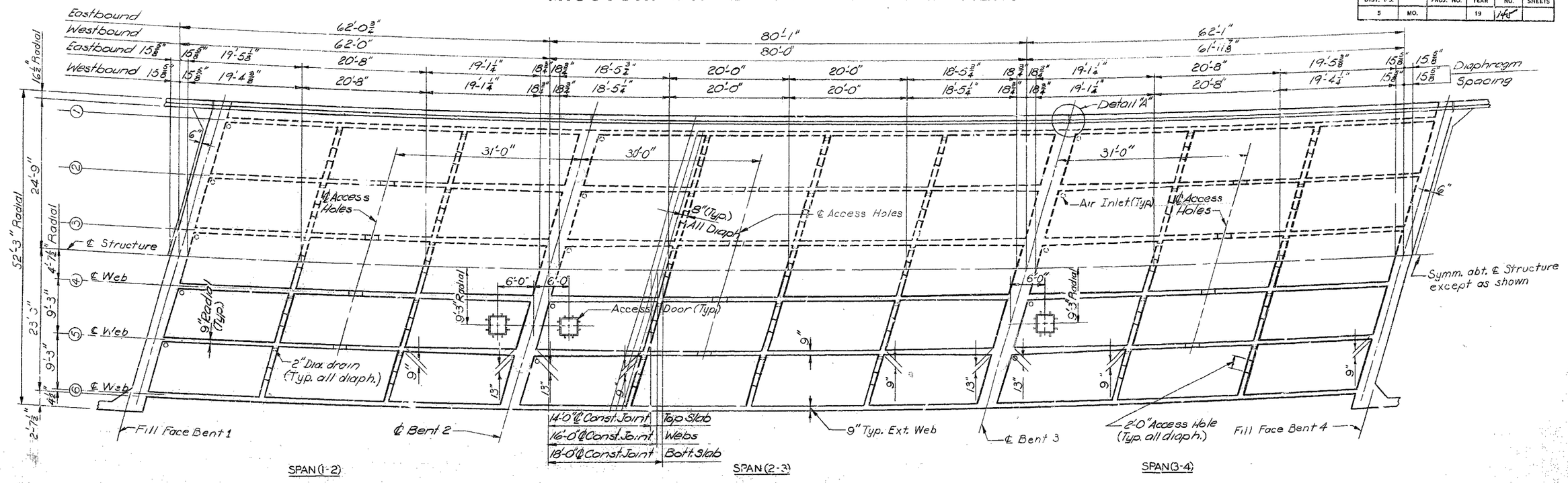


HALF PLAN & SECTION

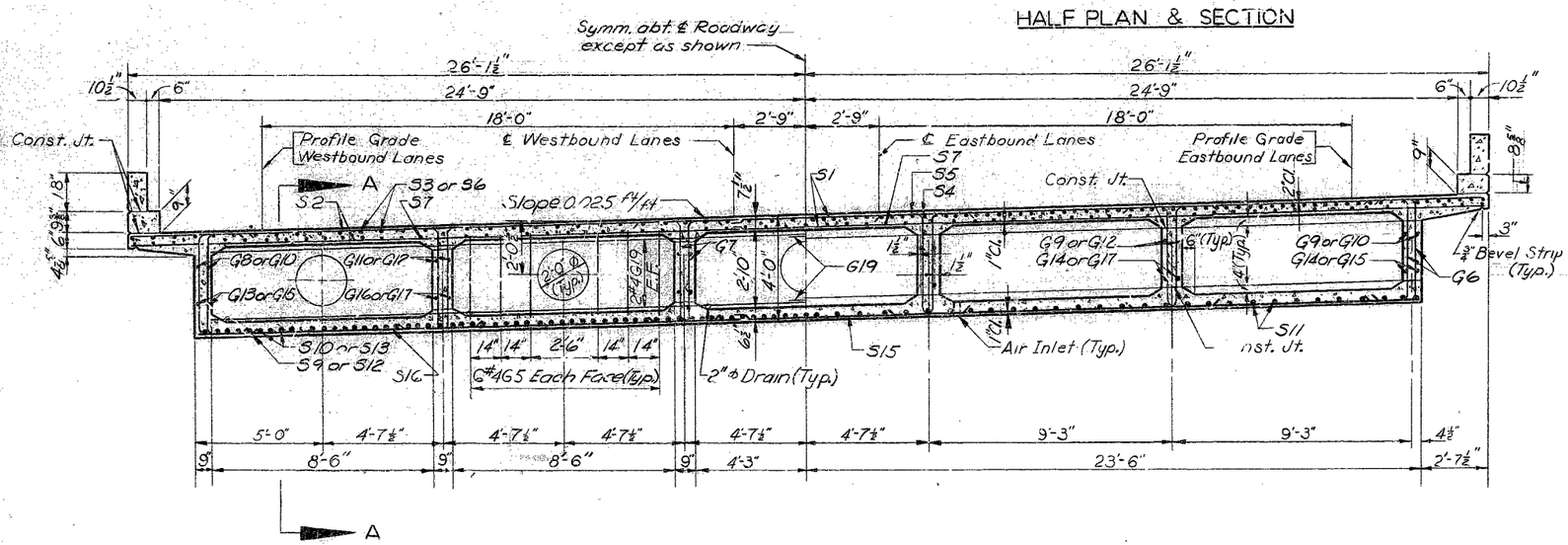


HALF SECTION NEAR DIAPHRAGM

HALF SECTION NEAR INT. BENT

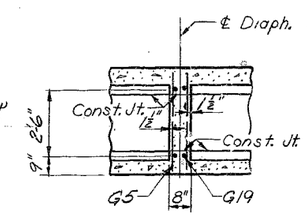


SECTION AA

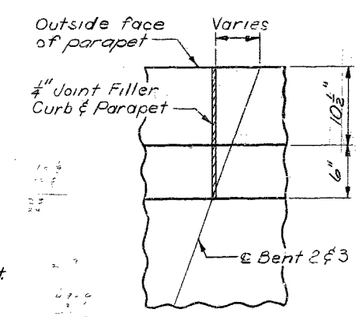


DETAIL A

NOTES:
For Air Inlet Details see sheet No. 8 of 13.
For Access Door Details see sheet No. 9 of 13.

**BRIDGE** OVER WORNALL ROAD
**STATE ROAD** INTERSTATE ROUTE 435
**ABOUT** 5 MILES NORTH OF MARTIN CITY
**PROJECT NO.** I-IG-435-1(53) (RTE. I-435) **STA.** 1017+59.01 E.B. LANE, 1017+37.07 W.B. LANE
JACKSON **COUNTY**

A-1240

DETAILED OCT. 1965 BY HOHLT
CHECKED NOV. 1965 BY J. PARIKH

Note: This drawing is not to scale. Follow dimensions.

Sheet No. 7 of 13.

NO CONSTRUCTION CHANGES

259

# MISSOURI STATE HIGHWAY DEPARTMENT

| FED. ROAD DIST. NO. | STATE | FED. AID PROJ. NO. | FISCAL YEAR | SHEET NO. | TOTAL SHEETS |
|---|---|---|---|---|---|
| 5 | MO | | 19 | 146 | |

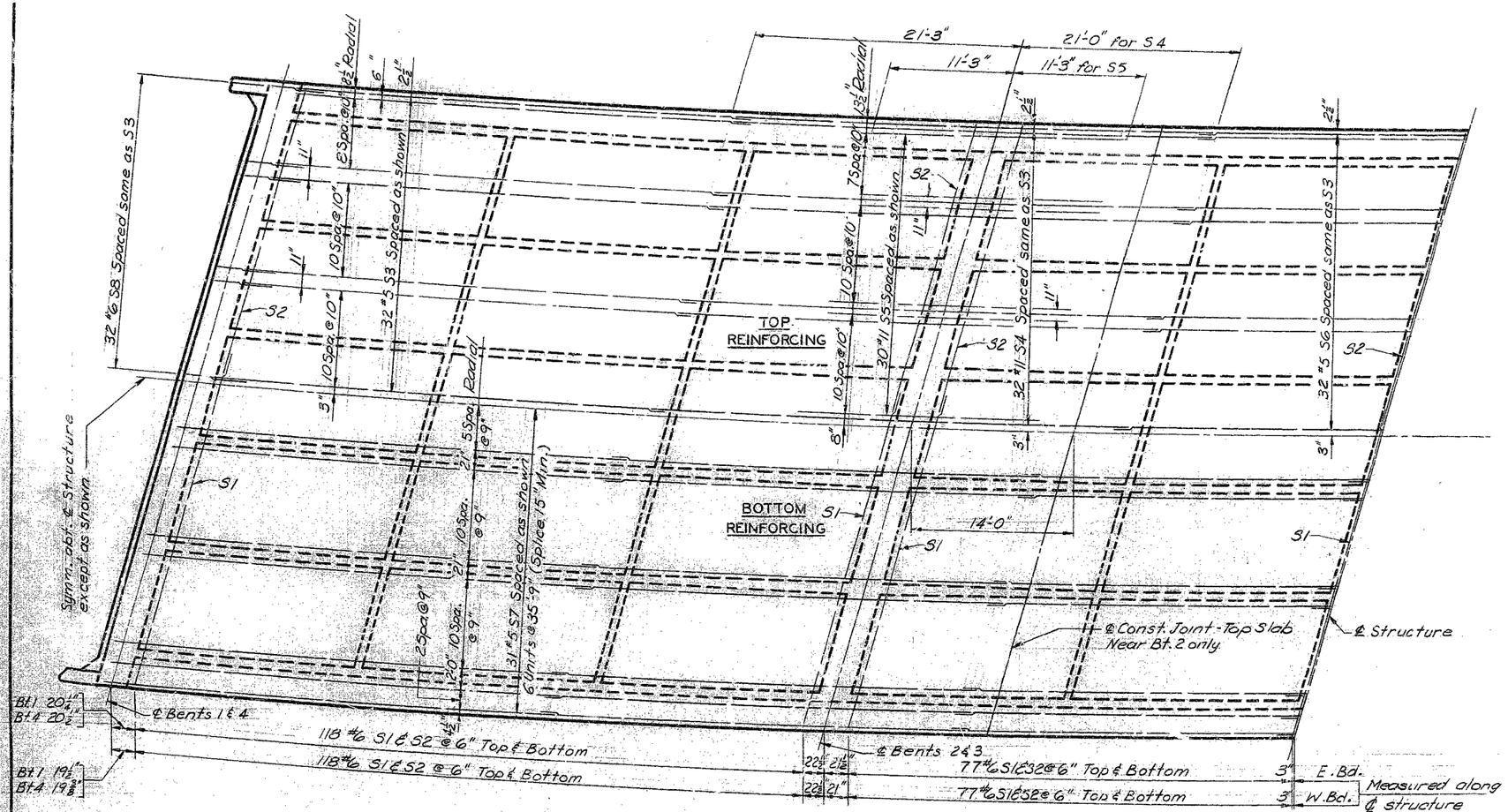


PLAN - TOP - SLAB

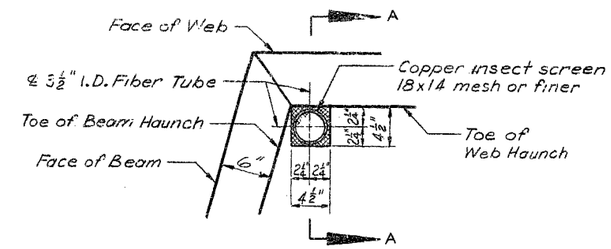


PLAN

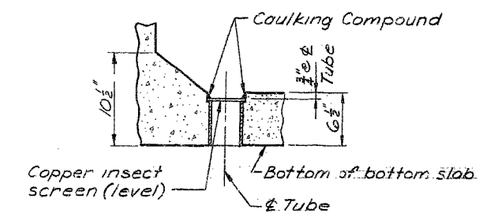


SECTION A-A

## AIR INLET DETAILS

NOTES:

Payment for furnishing and placing fibre tube, copper screen and caulking compound shall be included in price bid for other items of works.

For location of air inlets, and section thru slab see Sheet No. 7 of 13.

Min. lap for reinforcing steel shall be 24 dia. except as noted.

**BRIDGE** OVER WORNALL ROAD

**STATE ROAD** INTERSTATE ROUTE 435

**ABOUT** 5 MILES NORTH OF MARTIN CITY

**PROJECT NO.** I-IG-435-1(53)(RTE. I-435) **STA.** 1017+59.01 E.B. LANE 1017+37.07 W.B. LANE

JACKSON **COUNTY**

DETAILED OCT. 1965 BY VIEHLAND
CHECKED NOV. 1965 BY J. PARIKH

P. W. BOOKER & ASSOCIATES, INC.
CONSULTING ENGINEERS
215 NORTH ELEVENTH ST.
ST. LOUIS 1, MISSOURI

Note: This drawing is not to scale. Follow dimensions.

Sheet No. 8 of 13.

A-1240

NO CONSTRUCTION CHANGES

269

# MISSOURI STATE HIGHWAY DEPARTMENT

| FED. ROAD DIST. NO. | STATE | FED. AID PROJ. NO. | FISCAL YEAR | SHEET NO. | TOTAL SHEETS |
|---|---|---|---|---|---|
| 5 | MO. | | 19 | 147 | |

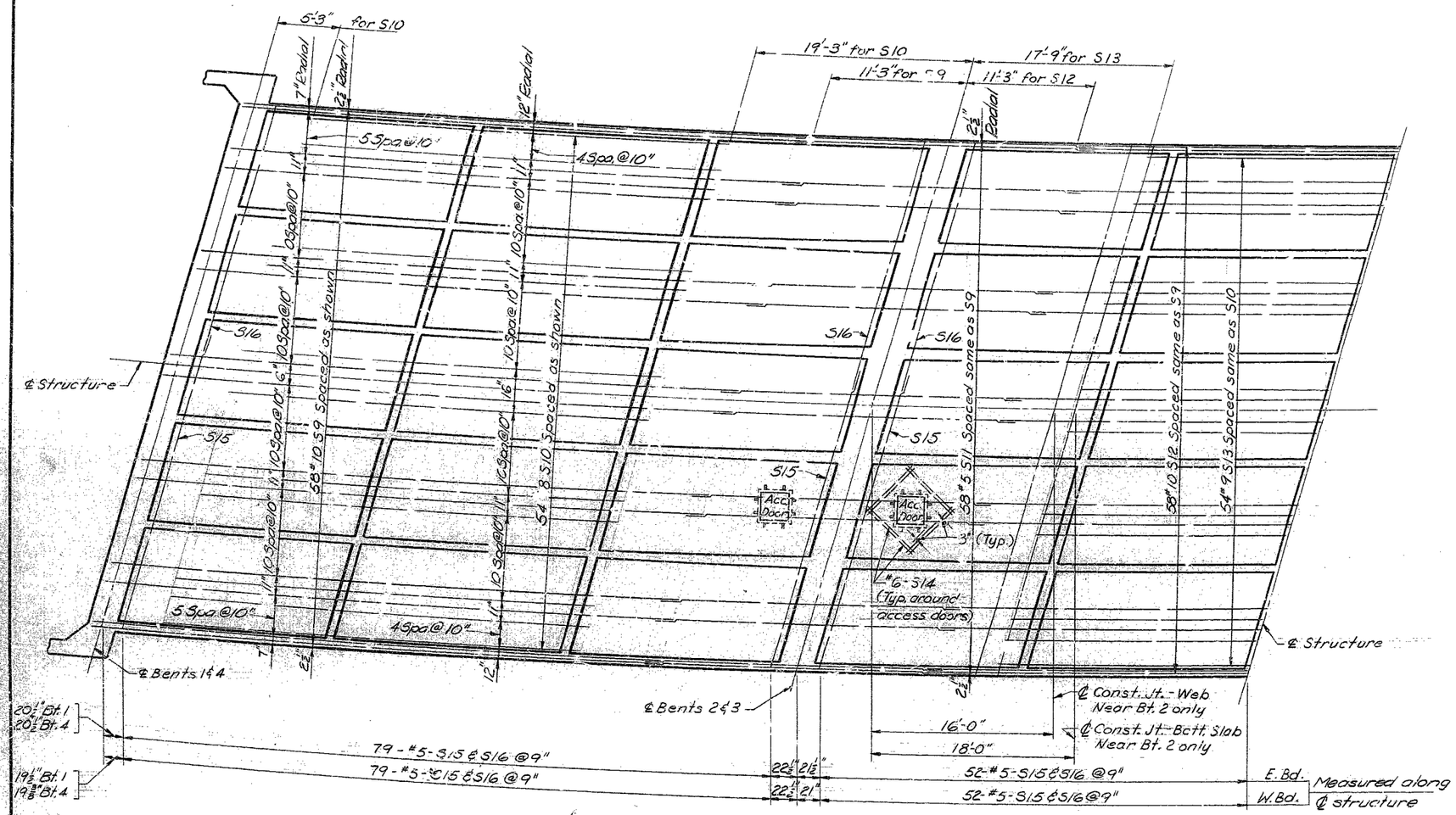


SPAN (1-2)(4-3)

HALF SPAN (2-3)

PLAN - BOTTOM SLAB

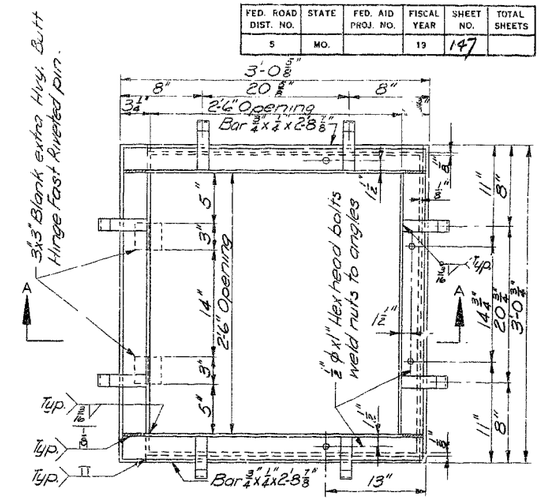


PLAN

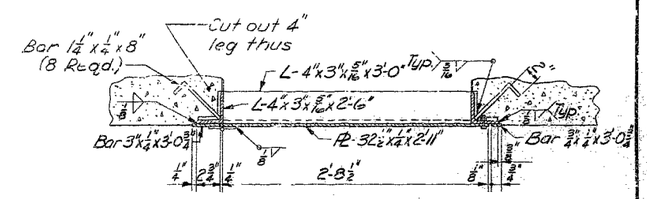


SECTION A-A

## ACCESS DOOR DETAIL

(3 Required)

NOTES:

Access doors to be assembled and in place while slab is being poured. Weight of one door & frame is approx. 179#.
Bottom surface of door is to be flush with bottom slab.
Bottom slab reinforcing shall be cut in field to allow access door installation.
For location of access doors and section thru slab see Sheet No. 7 of 13.
Min. lap for reinforcing steel shall be 24 dia. except as noted.

**BRIDGE** OVER WORNALL ROAD

**STATE ROAD** INTERSTATE ROUTE 435

**ABOUT** 5 MILES NORTH OF MARTIN CITY

**PROJECT NO.** I-IG-435-1(53)(RTE. I-435) **STA.** 1017+59.01 E.B. LANE, 1017+37.07 W.B. LANE

JACKSON COUNTY

DETAILED OCT. 1965 BY HERD
CHECKED NOV. 1965 BY J. PARIKH

Note: This drawing is not to scale. Follow dimensions.

Sheet No. 9 of 13.

A-1240

NO CONSTRUCTION CHANGES

261

# MISSOURI STATE HIGHWAY DEPARTMENT

| FED. ROAD DIST. NO. | STATE | FED. AID PROJ. NO. | FISCAL YEAR | SHEET NO. | TOTAL SHEETS |
|---|---|---|---|---|---|
| 5 | MO. | | 19 | 148 | |

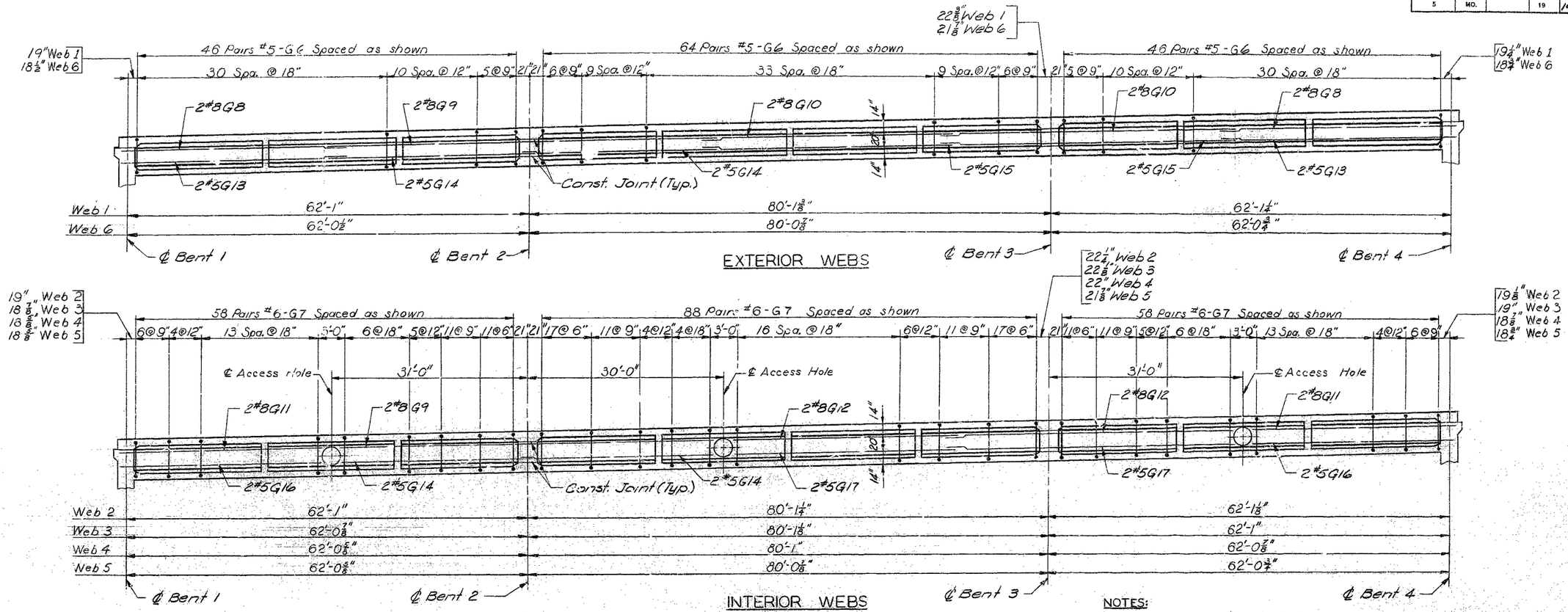


WEB ELEVATIONS EASTBOUND LANES

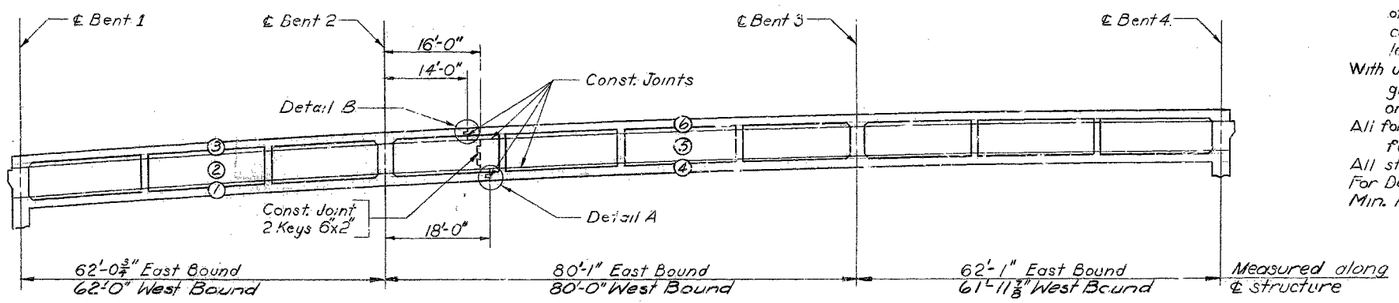


POURING SEQUENCE

NOTES:

Numbers in circles indicate the basic pouring sequence. Longitudinal joints in roadway slabs, unless specifically on plans, will not be permitted.

The contractor shall use an approved oscillating screed type, self-propelled mechanical finishing machine and shall pour roadway slabs at a rate of not less than 59 cubic yards per hour. He shall observe the basic pouring sequence unless he can demonstrate to the engineer that he can pour and satisfactorily finish the superstructure concrete at a rate which will permit the combining of such of the basic pours as may be specifically designated by the engineer as being compatible with design. Finishing machine loads will not be permitted on concrete less than 48 hours old.

With use of forms and basic falsework meeting the approval of the engineer, the girder webs and diaphragms may be poured with the bottom slab sections on which they bear.

All forms shall be removed from the interior of box girders except top slab forms which may be left in place.

All stirrups shall be placed parallel to bents.

For Detail "A", Detail "B" and reinforcing around access hole in web See Sheet 11 of 13.

Min. lap for reinforcing steel shall be 24 dia. except as noted.

**BRIDGE** OVER WORNALL ROAD

**STATE ROAD** INTERSTATE ROUTE 435

**ABOUT** 5 MILES NORTH OF MARTIN CITY

**PROJECT NO.** I-IG-435-1(53)(RTE I-435) **STA.** 1017+59.01 E.B. LANE 1017+37.07 W.B. LANE

JACKSON **COUNTY**

A-1240

DETAILED OCT. 1965 BY HOHLT
CHECKED NOV. 1965 BY J. PARIKH

Note: This drawing is not to scale. Follow dimensions.

Sheet No. 10 of 13.

NO CONSTRUCTION CHANGES

262

# MISSOURI STATE HIGHWAY DEPARTMENT

| FED. ROAD DIST. NO. | STATE | FED. AID PROJ. NO. | FISCAL YEAR | SHEET NO. | TOTAL SHEETS |
|---|---|---|---|---|---|
| 5 | MO. | | 19 | 149 | |

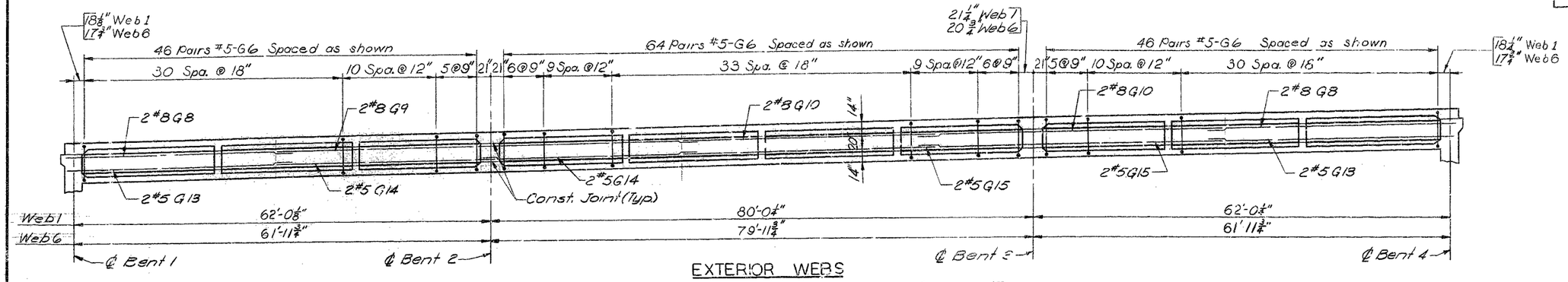


EXTERIOR WEBS

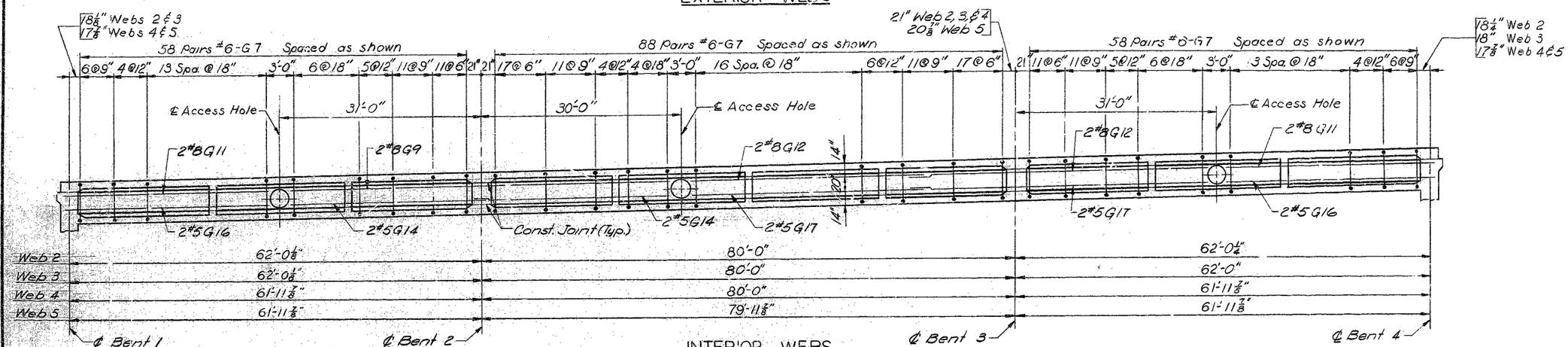


INTERIOR WEBS

WEB ELEVATIONS WESTBOUND LANES

NOTES:

All stirrups shall be placed parallel to bents.
For location of Detail "A", and Detail "B" See Sheet No. 10 of 13.
Min. Lap for reinforcing steel shall be 24 dia. except as noted.

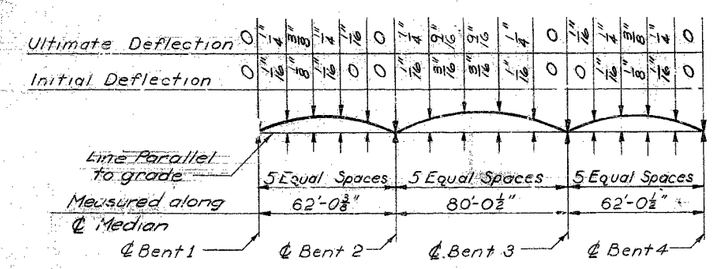


CAMBER DIAGRAM

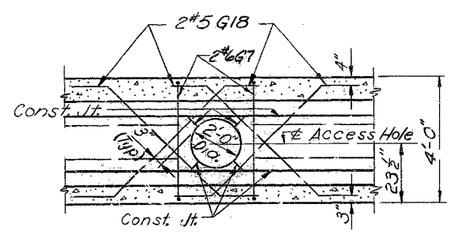


ACCESS HOLE IN WEB

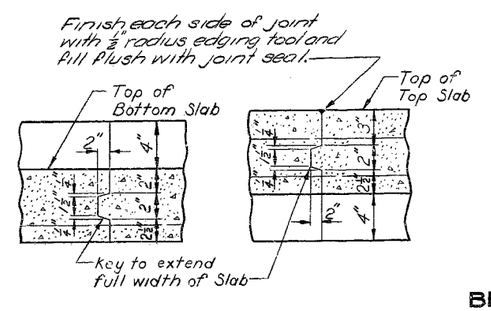


DETAIL A

DETAIL B

**BRIDGE** OVER WORNALL ROAD

**STATE ROAD** INTERSTATE ROUTE 435

**ABOUT** 5 MILES NORTH OF MARTIN CITY

**PROJECT NO.** I-IG-435-1(53)(RTE I-435) **STA.** 1017+59.01 E.B. LANE, 1017+37.07 W.B. LANE

JACKSON **COUNTY**

A-1240

DETAILED OCT. 1965 BY HOHLT
CHECKED NOV. 1965 BY J. PARIKH

Note: This drawing is not to scale. Follow dimensions.

Sheet No. 11 of 13.

NO CONSTRUCTION CHANGES

263

# MISSOURI STATE HIGHWAY DEPARTMENT

| FED. ROAD DIST. NO. | STATE | FED. AID PROJ. NO. | FISCAL YEAR | SH T NO. | TOTAL SHEETS |
|---|---|---|---|---|---|
| 5 | MO. | | 19 | 150 | |

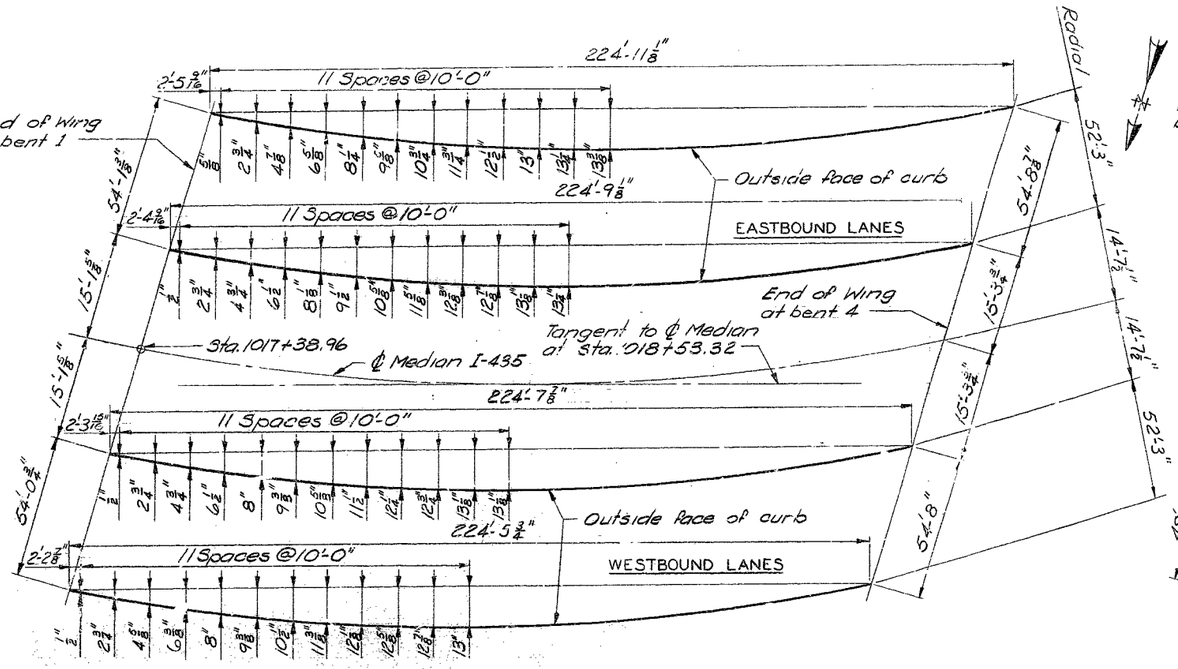


OUTSIDE FACE OF PARAPETS

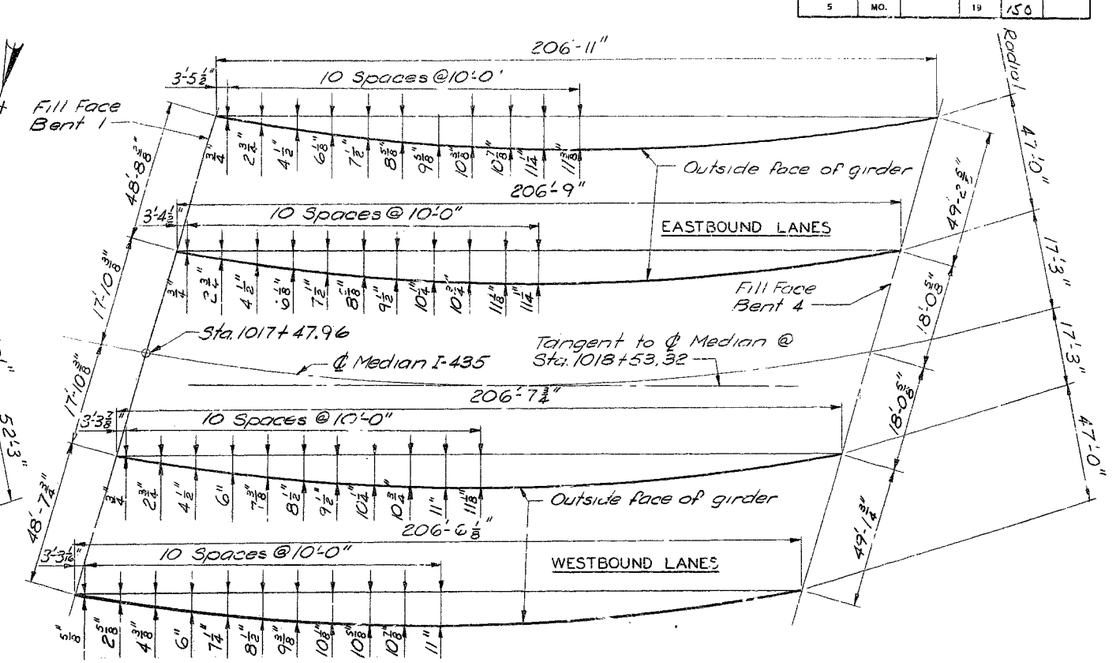


OUTSIDE FACE OF GIRDERS

## CURVE OFFSETS

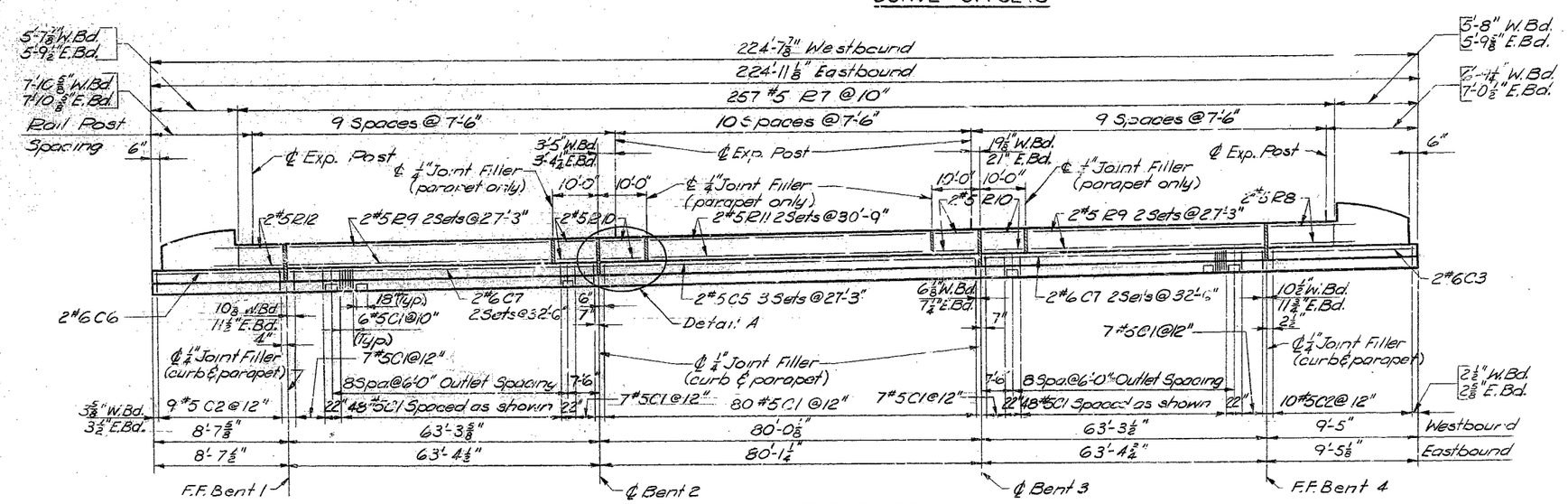


CURB & PARAPET ELEVATION
LEFT RAIL

NOTE:
All longitudinal dimensions are along the outside face of parapet.

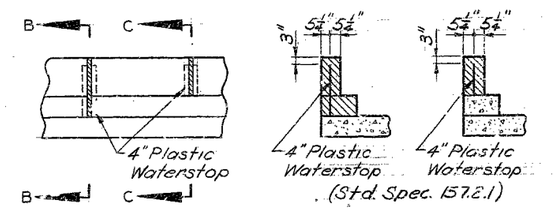


DETAIL A  SECTION B-B  SECTION C-C

## PLASTIC WATERSTOPS
(Left Rail Only)

NOTES:
Cost of plastic waterstop complete in place to be included in unit price bid for concrete.
For Handrail Details, Plan of End Posts and Curb & Parapet elevation of Right Rail see Sheet 13 of 13.

**BRIDGE** OVER WORNALL ROAD
**STATE ROAD** INTERSTATE ROUTE 435
**ABOUT** 5 MILES NORTH OF MARTIN CITY
**PROJECT NO.** I-IG-435-1(53)(RTE I-435) **STA.** 1017+59.01 E.B. LANE, 1017+37.07 W.B. LANE
JACKSON **COUNTY**

DETAILED OCT. 1965 BY HERD
CHECKED NOV. 1965 BY R. PARIKH

Note: This drawing is not to scale. Follow dimensions.

Sheet No. 12 of 13.

A-1240

264

# MISSOURI STATE HIGHWAY DEPARTMENT

| FED ROAD DIST NO | STATE | FED AID PROJ NO | FISCAL YEAR | SHEET NO | TOTAL SHEETS |
|---|---|---|---|---|---|
| 5 | MO | | 19 | 151 | |

GENERAL NOTES:

All handrail posts shall be set normal to grade.

Aluminum tube handrail shall be bent to conform to vertical and horizontal alignment of parapet.

Aluminum washer shims between top of parapet and post base may be used for adjusting handrail alignment. Maximum thickness of shims to be 1/8". Where more fitting of post is required for proper alignment, concrete bearing areas shall be ground down.

All parts of handrail, except anchor bolts, nuts, washers, and set screws are to be of aluminum material.

The contract unit price per linear foot of "Bridge Rail" shall include furnishing and erecting the handrail complete with anchor bolts, shims and Insulating compound.

All fillets 1/4" except as noted.

All drafts 3° except as noted.

Pipe rail to be fabricated in two or three panel lengths unless otherwise approved.

Omit set screw on side near filled Joint in parapet at all expansion posts.

Top of curbs and parapets to be built parallel to grade with curb and parapet joints normal to grade.

Concrete end posts to be vertical.

All exposed edges of end posts, parapets and curbs shall have 1/2" radius.

If the contractor desires, he may use drive fit cast aluminum end caps in lieu of welded aluminum closure plates.

Integrally cast trust coupons and a coat of clear lacquer specified in Std. Spec. 56.2.4 and 56.3.5 respectively will not be required for these rail posts.

All longitudinal dimensions are along the outside face of parapet.

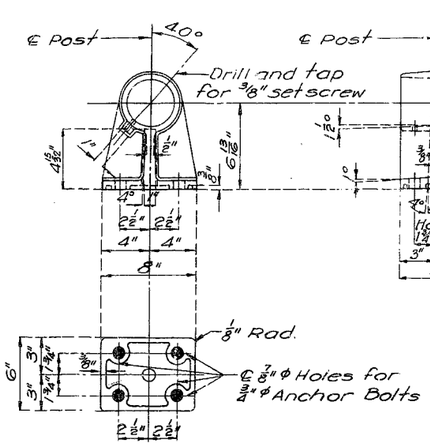


POST DETAILS

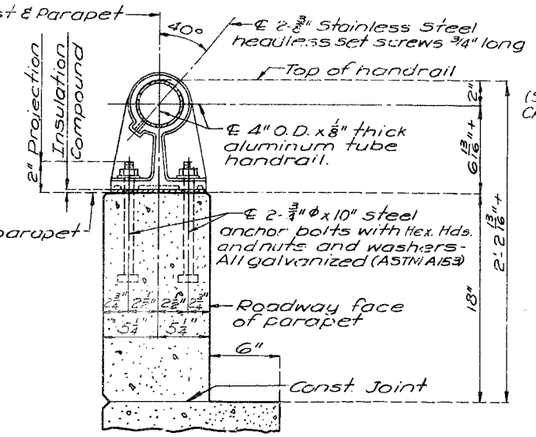


SECTION THRU HANDRAIL

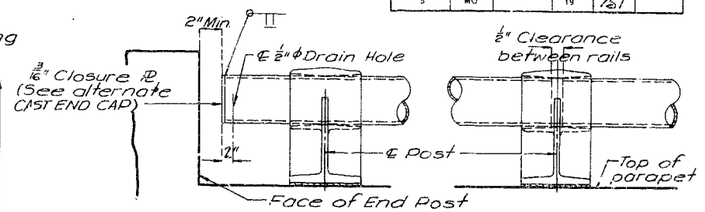


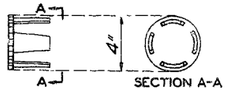


CAST END CAP
(Drive Fit Type)

POST

RAIL SPLICE OR EXP.

TYPICAL HANDRAIL DETAILS

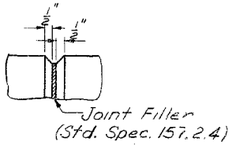


FILLED JOINT DETAILS

SINGLE TUBE ALUMINUM RAILING

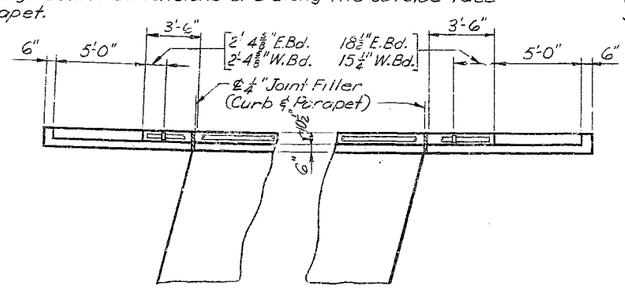


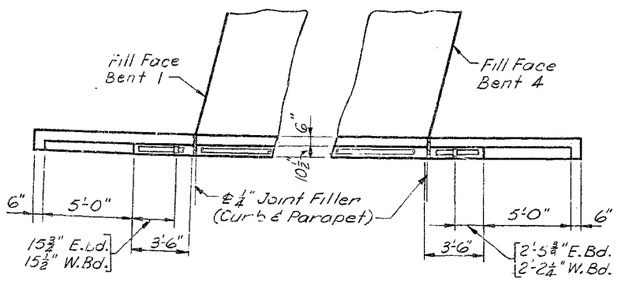


PLAN OF END POSTS

NOTE:
For Curb and Parapet elevation of Left Rail and Details of Plastic Waterstop, see Sheet 12 of 13.

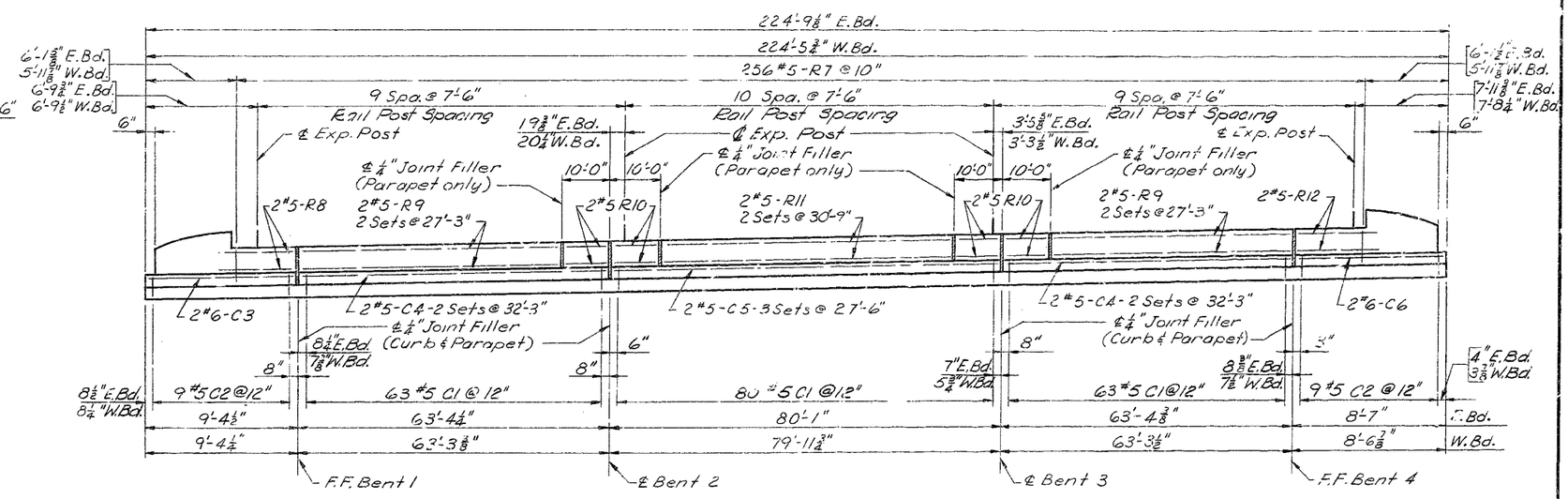


CURB & PARAPET ELEVATION
RIGHT RAIL

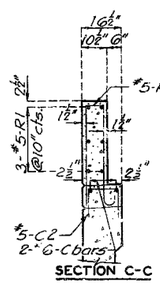


SECTION C-C

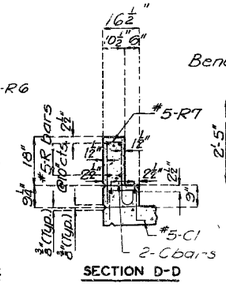


SECTION D-D

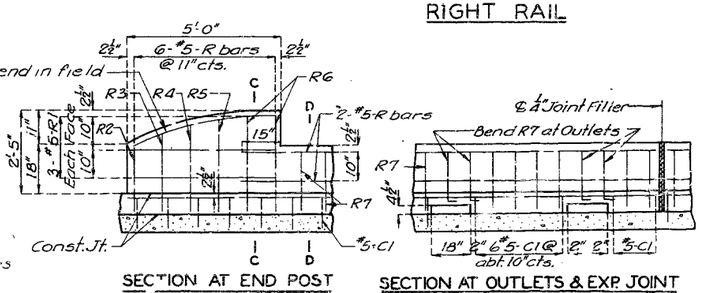


SECTION AT END POST

SECTION AT OUTLETS & EXP. JOINT
Note: Where there are no outlets use #5-C1 @ abt. 12" cts.

NOTE: For horizontal curb and parapet bars use minimum lap of 15" for #5 and 18" for #6.

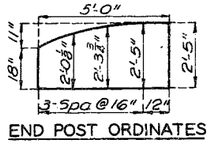


END POST ORDINATES

**BRIDGE** OVER WORNALL ROAD

**STATE ROAD** INTERSTATE ROUTE 435

**ABOUT** 5 MILES NORTH OF MARTIN CITY

**PROJECT NO.** I-[redacted]-5(53)(RTE I-435) **STA.** 1017+59.01 E.B. LANE
1017+37.07 W.B. LANE

JACKSON **COUNTY**

| No. 1.5.2 | Revised |
|---|---|
| Nov. 1963 | May 1965 |

DETAILED OCT. 1965 BY VIEHLAND
CHECKED NOV. 1965 BY R. PARISH

R. W. BOOKER & ASSOCIATES, INC.
CONSULTING ENGINEERS
215 NORTH ELEVENTH ST.
ST. LOUIS MISSOURI

Note: This drawing is not to scale. Follow dimensions.

Sheet No. 13 of 13.

A-1240

265

FINAL PLANS

# MISSOURI STATE HIGHWAY DEPARTMENT

FINAL PLANS

| FED. ROAD DIST. NO. | STATE | FED. AID PROJ. NO. | FISCAL YEAR | SHEET NO. | TOTAL SHEETS |
|---|---|---|---|---|---|
| 5 | MO. | | 19 | 139 | |

Twin 62.03'-80.04'-62.04' Cont. Concrete Box Girder Spans

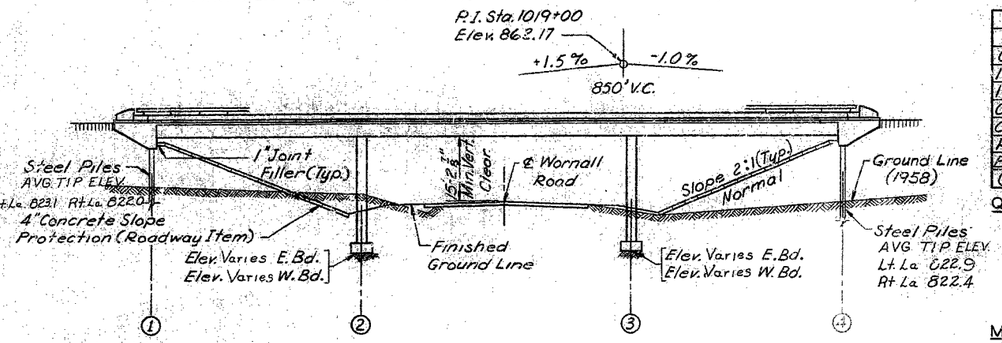


GENERAL ELEVATION

| QUANTITIES | | | | |
|---|---|---|---|---|
| Item | | Substr. | Superstr. | Total |
| Class 1 Excavation for Structures | Cu. Yd. | 279.0 | — | 279.0 |
| 10" Steel Piles in Place | Lin. Ft. | 757 | — | 757 |
| 10" Steel Pile Cut Offs | Lin. Ft. | 87 | — | 87 |
| Class B Concrete | Cu. Yd. | 28.1 | — | 28.1 |
| Class B1 Concrete | Cu. Yd. | | 150.9 | 150.9 |
| Reinforcing Steel | Lb. | 250 | 545790 | 546040 |
| Bridge Rail (Single Tube Type) | Lin. Ft. | — | 854 | 854 |
| Cont. Items: Class 1 + 25% | Cu. Yd. | 15 | | 15 |
| Test Holes (Bridge Bumper & Curb) | Lin. Ft. / Each | 52 / 5 | — | 52 / 5 |

QUANTITY NOTES:
All concrete and reinforcement above footings is included in superstructure quantities.
No payment for excavation allowed at End Bents Nos. 1 & 4.
Payment for furnishing and installing access doors and frames made and considered fully covered under price bid for other items.

MISCELLANEOUS NOTES:
Compacted roadway fill (full roadway width) placed up to elevation of bottom of concrete beam in front of and not less than 25'-0" in back of End Bents before steel piles were driven.

Lengths of Structures, fill face to fill face of end bents, along ℄ of structures are 206'-10" for Eastbound and 206'-7¼" for Westbound.
For Boring Data see Sheet No. 2 of 13.
(●) Indicates location of boring.

## GENERAL NOTES:

DESIGN SPECIFICATIONS: A.A.S.H.O. - 1961
DESIGN LOADING:
HS 20-44; 15#/sq. ft. Future Wearing Surface;
Modified 24,000# Tandem Axle;
Earth 120#; Equivalent Fluid Pressure 30#.
DESIGN UNIT STRESSES:
Class B Concrete (substructure) $f'_c$ = 1,200 p.s.i.
Class B1 Concrete (superstructure) $f'_c$ = 1,600 p.s.i.
Reinforcing Steel: $f_s$ = 20,000 p.s.i.
Structural Steel (A.S.T.M. A36-62T) $f'_s$ = 20,000 p.s.i.
Steel Pile (A.S.T.M. A36-62T) $f'_b$ = 9,000 p.s.i.
SURFACE SEAL: Superstructure deck surface sealed.
PAINTING:
Structural Steel access doors cleaned and painted in the field or may be cleaned and painted one coat of red lead in the shop with the two remaining coats applied in the field except that final coat on access doors and frames gray.

Cost of Painting included in price bid for other items.
FALSEWORK:
Falsework over existing lanes constructed with a minimum vertical clearance of 13'-0" from crown of existing lanes and a minimum lateral clearance of 26'-0" centered on existing lanes.

| FOOTING AND PILE DATA | | | | | | | |
|---|---|---|---|---|---|---|---|
| BENT NO. | | 1 | | 2 | 3 | 4 | |
| LANES | | EBd | WBd | | | EBd | WBd |
| SPREAD FOOTINGS | Foundation Material | | | Rock | Rock | | |
| | Design Bearing Tons/Sq. ft. | | | 11.3 | 11.3 | | |
| BEARING PILE | Pile Type & Size | 10BP42 | | | | 10BP42 | |
| | Number | 6 | 6 | | | 6 | 6 |
| | Approximate Length Ft. | 35 | 40 | | | 35 | 35 |
| | Design Bearing Value Tons | 50 | 50 | | | 50 | 50 |
| | * Hammer Energy Rqd. Ft-lb | 11,200 | | | | 11,200 | |

FOOTING AND PILE NOTES:
Footings carried 6" into hard, solid, undisturbed rock or 18" into soft rock or shale and cast against vertical faces of stone.

* Minimum Energy Requirement of hammer, based on plan length and design bearing value of pile. All piles driven to practical refusal at 1.9 times the design bearing value.

Note. For location of existing utility conduits see Road Plans.

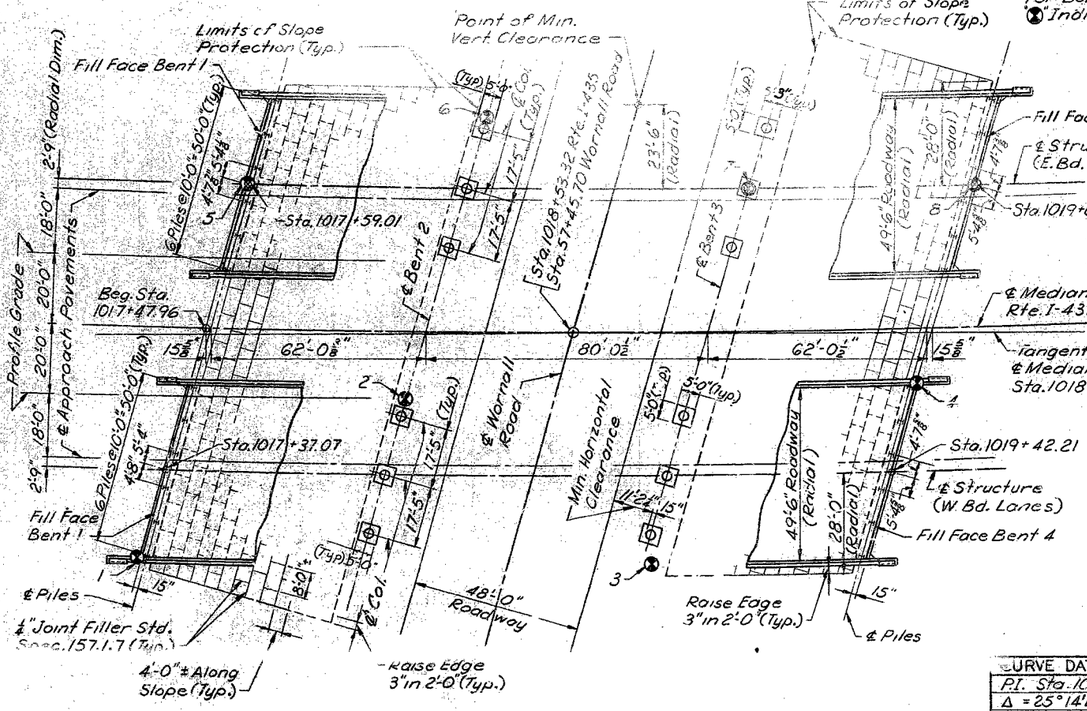


PLAN

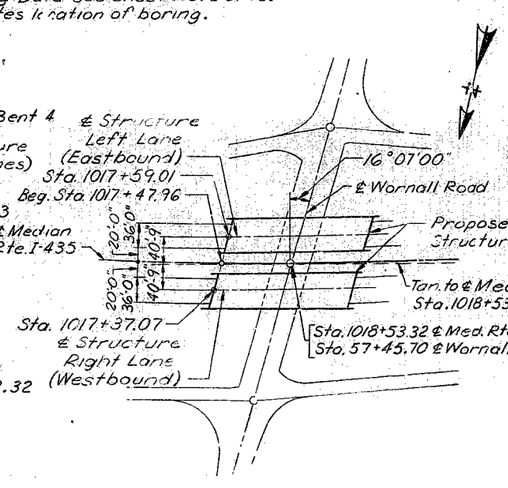


LOCATION SKETCH

| CURVE DATA (Rte. I-435) |
|---|
| P.I. Sta. 1014+50.4 |
| Δ = 25°14' Lt. |
| D = 1° |
| T = 1282.48' |
| L = 2523.33' |
| R = 5729.65' |
| S.E. = .025 ft./ft. |
| W. = 0 |

BENCH MARK:
B.M. PK NAIL IN END N. WING BT. #1 LT. LA BR.
ELEV. 859.61

STATE OF MISSOURI — EUGENE L. FIELDHAMMER — NUMBER E-10795 — REGISTERED PROFESSIONAL ENGINEER

SUBMITTED BY
REGISTERED PROFESSIONAL ENGINEER
MISSOURI NO. E-10795

**BRIDGE** OVER WORNALL ROAD
**STATE ROAD** INTERSTATE ROUTE 435
**ABOUT** 5 MILES NORTH OF MARTIN CITY
**PROJECT NO.** I-IG-435-1(53)(RTE. I-435) **STA.** 1017+59.01 E.B. LANE, 1017+37.07 W.B. LANE
JACKSON COUNTY

FINISHED
SUBMITTED BY D. B. Gardner BRIDGE ENGINEER DATE 5/20/66
APPROVED BY M. G. Brueer CHIEF ENGINEER DATE 5/20/66

STD. 54.00
A-1240

DESIGNED NOV. 1965 BY R. PARIKH
DETAILED OCT. 1965 BY VIEHLAND
CHECKED NOV. 1965 BY J. PARIKH

R. W. BOOKER & ASSOCIATES, INC.
CONSULTING ENGINEERS
215 NORTH ELEVENTH ST.
ST. LOUIS 1, MISSOURI

Note: This drawing is not to scale. Follow dimensions.

Sheet No. 1A of 2

FINAL PLANS

266

FINAL PLANS

# MISSOURI STATE HIGHWAY DEPARTMENT

FINAL PLANS

| FED. ROAD DIST. NO. | STATE | FED. AID PROJ. NO. | FISCAL YEAR | SHEET NO. | TOTAL SHEETS |
|---|---|---|---|---|---|
| 5 | MO. | | 19 | 144 | |

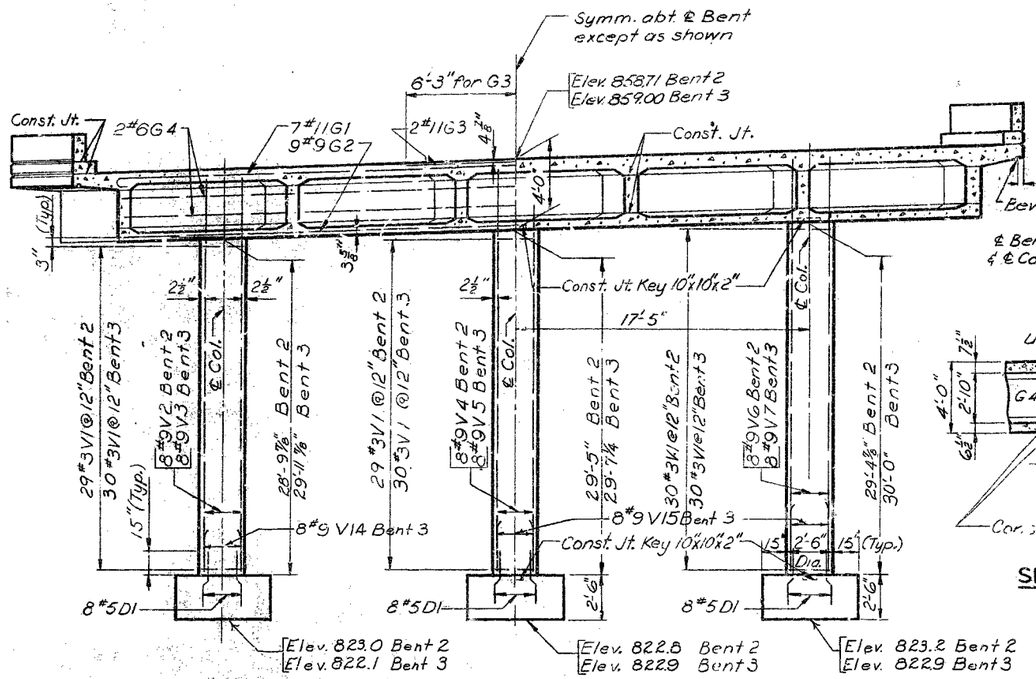


ELEVATION

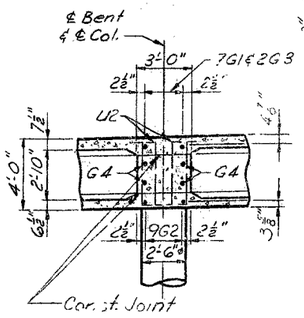


SECTION AT ℄

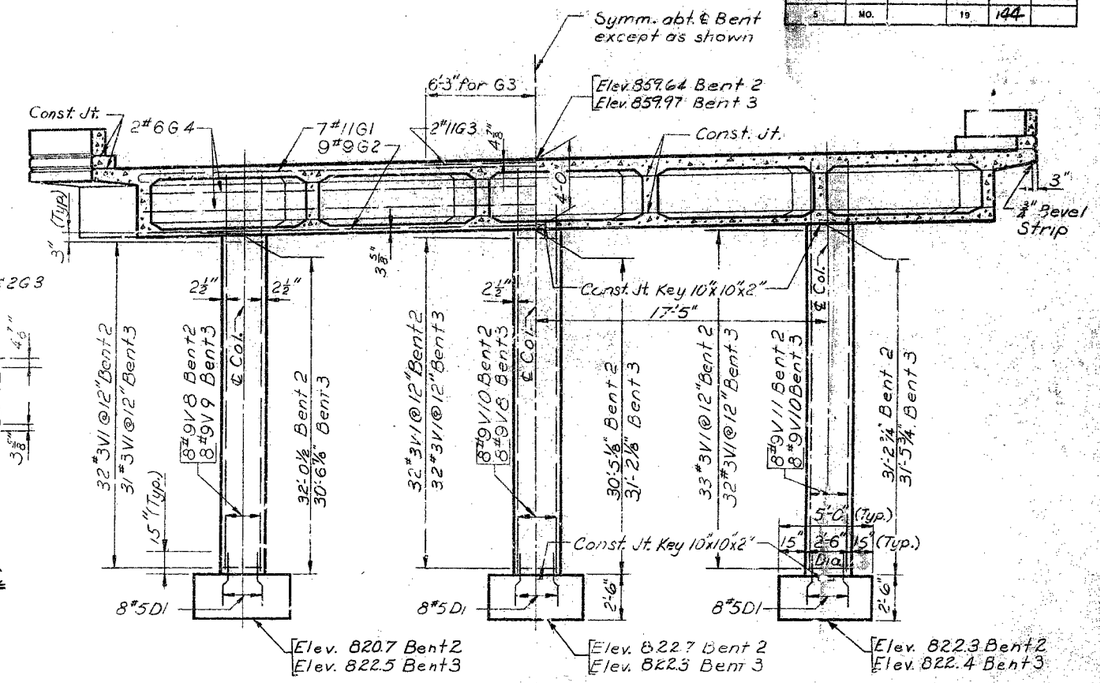


ELEVATION

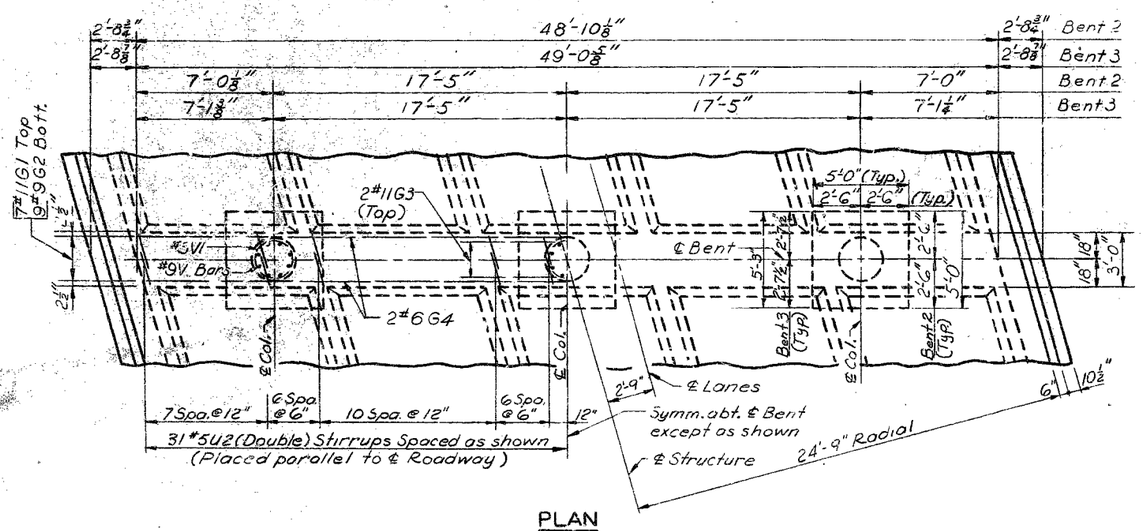


PLAN
EASTBOUND

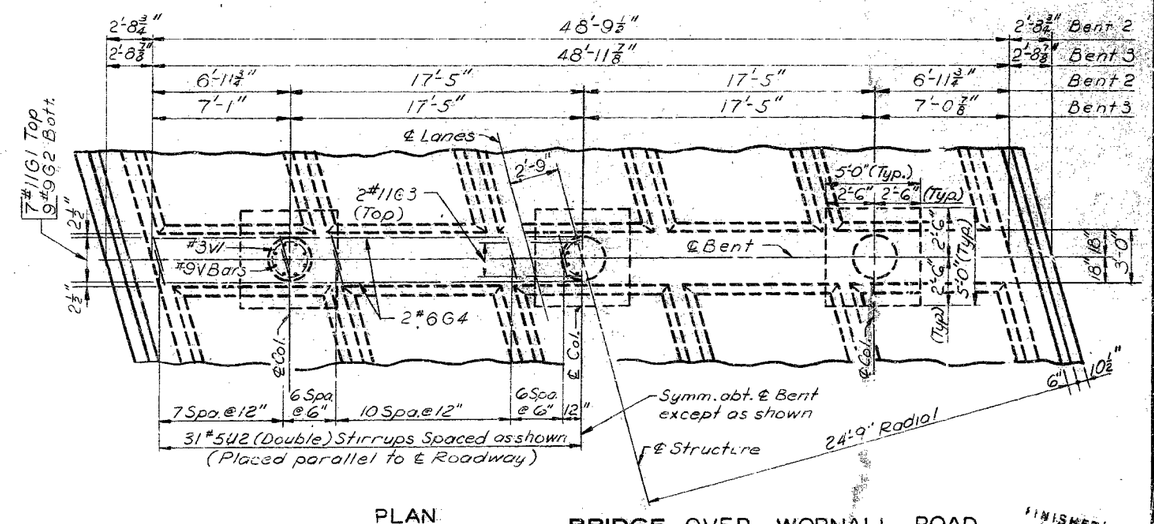


PLAN
WESTBOUND

INT. BENTS NO. 2 & 3

**BRIDGE** OVER WORNALL ROAD

**STATE ROAD** INTERSTATE ROUTE 435

**ABOUT** 5 MILES NORTH OF MARTIN CITY

**PROJECT NO** I-IG-435-1(53)(RTE. I-435) **STA.** 1017+59.01 E.B. LANE 1017+37.07 W.B. LANE

JACKSON COUNTY

FINISHED

A-1240

DETAILED SEPT. 1965 BY HOHLT

CHECKED NOV. 1965 BY J. PARIKH

R. W. BOOKER & ASSOCIATES, INC.
CONSULTING ENGINEERS
215 NORTH ELEVENTH ST.
ST. LOUIS 1, MISSOURI

Note: This drawing is not to scale. Follow dimensions.

Sheet No. 6A of 2.

FINAL PLANS

267

# MISSOURI HIGHWAY AND TRANSPORTATION COMMISSION

| STATE | PROJ NO | SHEET NO. |
|---|---|---|
| MO | | 28 |
| SEC/SUR 31 | TWP 48N | RGE. 33W |

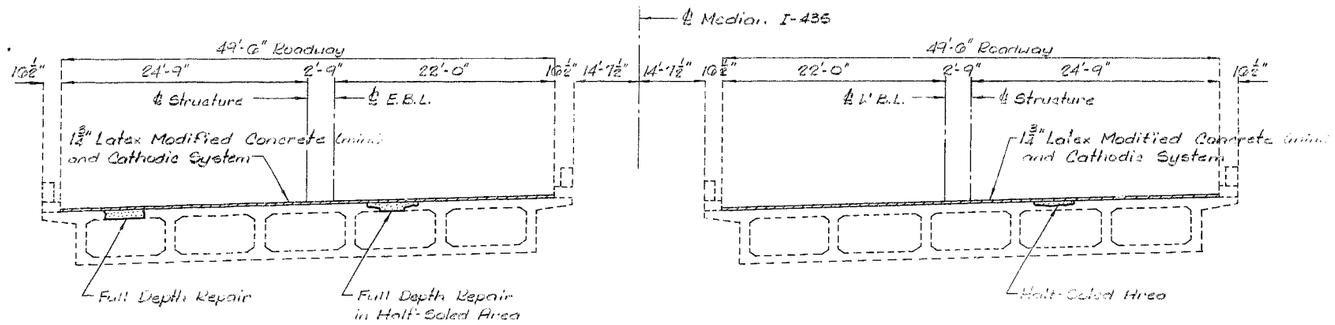


SECTION THRU SLAB

GENERAL NOTES:

Design Specifications: A.A.S.H.T.O. - 1977 and Interims through 1982.

Outline of old work is indicated by light dashed lines. Heavy lines indicate new work.

Traffic over structure to be maintained during construction.

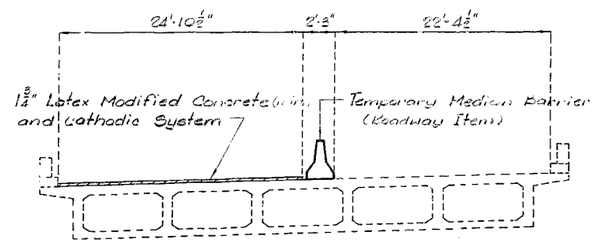


PHASE 1 - E.B.L.

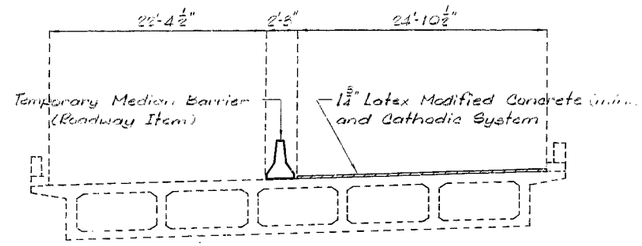


PHASE 3 - W.B.L.

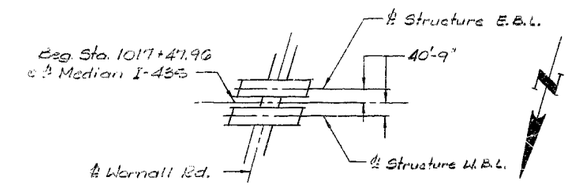


LOCATION SKETCH

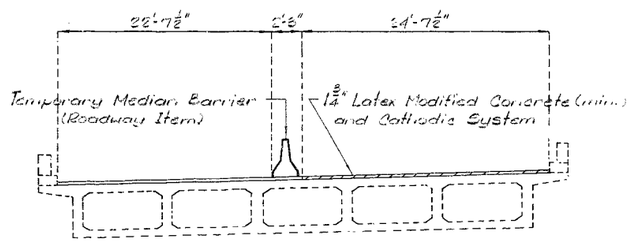


PHASE 2 - E.B.L.

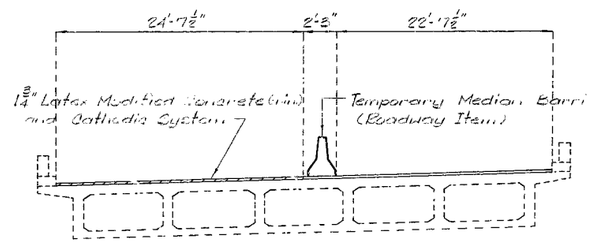


PHASE 4 - W.B.L.

| ESTIMATED QUANTITIES | | |
|---|---|---|
| ITEM | | TOTAL |
| Repairing Concrete De (Half-Soling) | Sq. Ft. | 1,023 |
| Full Depth Repair | Sq. Ft. | 205 |
| Latex Concrete Wearing Surface | Sq. Yd. | 2,274 |
| Cathodic Protection System | Lump Sum | 1 |

REPAIRS TO:

**BRIDGE OVER WORNALL ROAD**

STATE ROAD INTERSTATE ROUTE 435

IN KANSAS CITY

PROJECT NO. I-IR-IRG-435-1(149) STA. 1017+47.96

JOB NO. 4-1435-442B RTE. I-435

JACKSON COUNTY

DATE Jan. 15, 1985

| STD. |
|---|
| STD. |
| A-1240R |

DESIGNED OCT., 1984
DETAILED OCT., 1984
CHECKED OCT., 1984

Note: This drawing is not to scale. Follow dimensions.



323

| STATE | PROJ NO | SHEET NO. |
|---|---|---|
| MO. | | 29 |

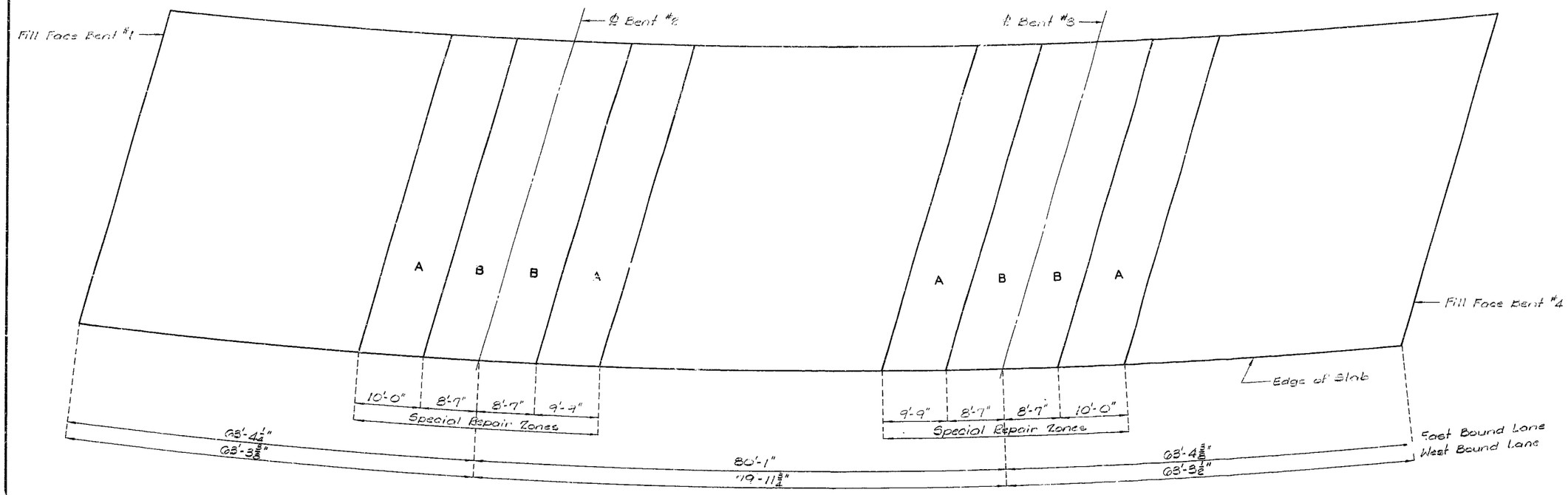


PLAN OF EXISTING SLAB
SHOWING SPECIAL REPAIR ZONES

Note: Any repair in the remainder of the bridge that is within 3'-0" of Zone A shall be completed before removing old concrete in Zone A.
Sequence of Repair: Zone A then Zone B.
Zones with the same letter designation may be repaired at the same time.

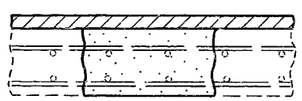

FULL DEPTH REPAIR

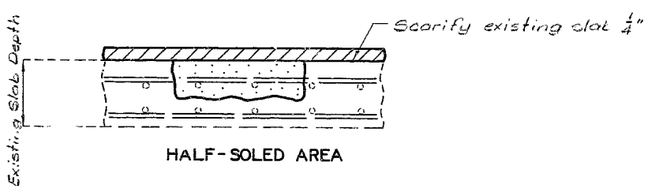


HALF-SOLED AREA

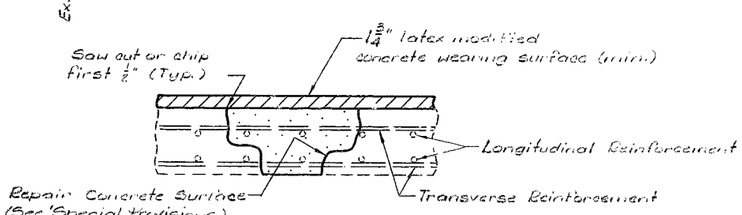


FULL DEPTH REPAIR
IN HALF-SOLED AREA

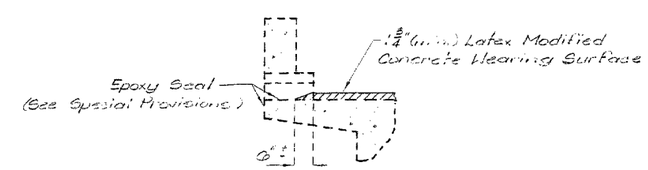


TYPICAL SECTION AT CURB SHOWING OUTLET

324

DETAILED OCT., 1984
CHECKED OCT., 1984

Note: This drawing is not to scale. Follow dimensions.

Sheet No. 2 of 5

JACKSON COUNTY

A-1240R

| STATE | PROJ NO | SHEET NO |
|---|---|---|
| MO | | 30 |

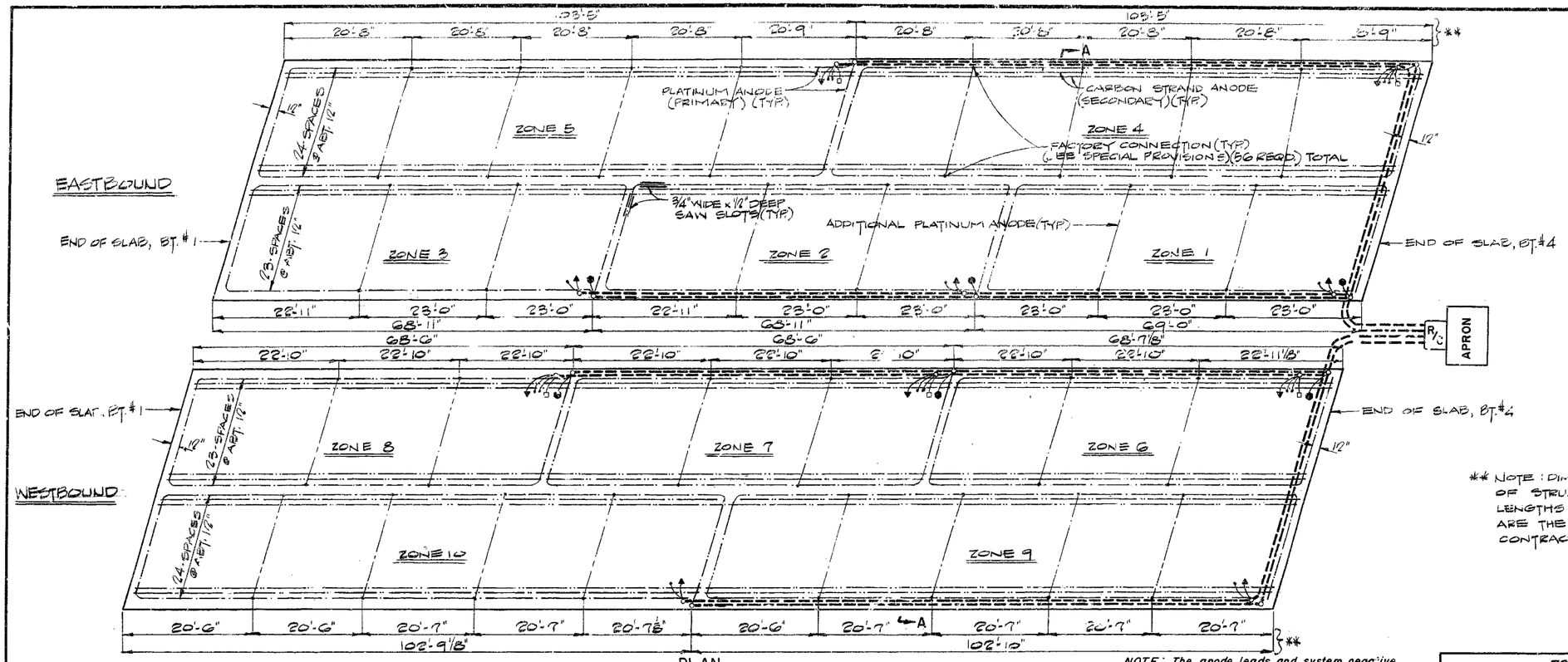


PLAN

** NOTE: DIMENSIONS ARE AT CENTERLINE OF STRUCTURE (RADIAL). ACTUAL ANODE LENGTHS (PRIMARY AND SECONDARY) ARE THE RESPONSIBILITY OF THE CONTRACTOR.

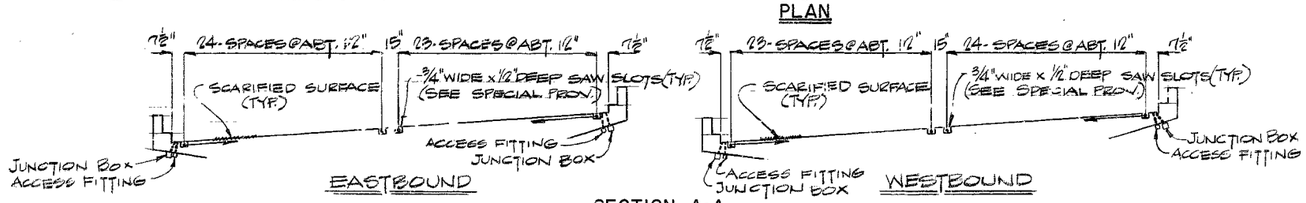


SECTION A-A

NOTE: The anode leads and system negative return leads shall be routed in the same conduit. The reference cell, reference cell ground leads, rebar probe and probe ground leads shall be routed in the same conduit.
Reference cells are to be placed between anodes.
Reference cell ground shall be welded to top rebar within one foot of reference cell.
All zones are similar with varying widths (see Section A-A).
Anode assembly number must match zone number.

ESTIMATED QUANTITIES *

| ITEM | UNIT | QUANTITY |
|---|---|---|
| Primary Anodes | Lin. Ft. | 2780 |
| Secondary Anode Strands | Lin. Ft. | 18,560 |
| Reference Cells | Each | 10 |
| Rebar Probes | Each | 5 |
| Thermite Welds | Each | 21 |
| Conduit 2" ϕ P.V.C. | Lin. Ft. | 1400 |
| | | |
| | | |

* For information only.
Note: Primary anodes, secondary anode strands and conduit lengths are approximate. Actual lengths are the responsibility of the contractor.

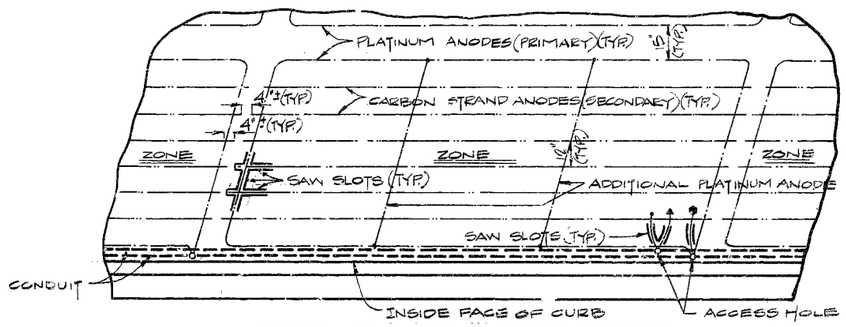


TYPICAL ZONE LAYOUT EXCEPT AS NOTED

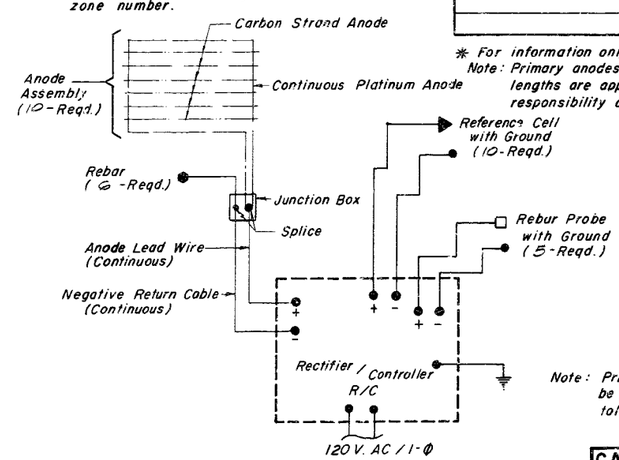


PARTIAL SCHEMATIC

DENOTATIONS
- Platinum Anode
- Carbon Strand Anode
- System Negatives Connection
- Reference Cell
- Rebar Probe (Corrosometer)
- Grounds
- Conduit

Note: Primary and secondary anode strands shall be placed as shown with a placement tolerance of plus or minus three inches.

CATHODIC PROTECTION SYSTEM

DETAILED DEC. 1984
CHECKED DEC. 1984

Note: This drawing is not to scale. Follow dimensions.

Sheet No. 3 of 5

JACKSON COUNTY

A-1240R

325

| STATE | PROJ NO | SHEET NO |
|---|---|---|
| MO | | 31 |

NOTE: THE REFERENCE CELL SHALL BE PLACED IN THE EXCAVATED AREA WITHIN 1" BUT NOT IN DIRECT CONTACT OF TOP-MAT REINFORCING STEEL.

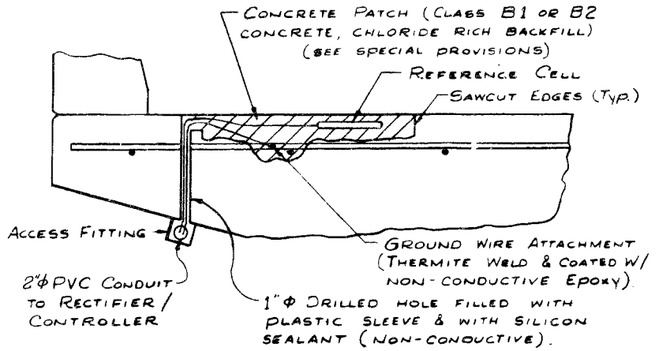


## REFERENCE CELL DETAILS

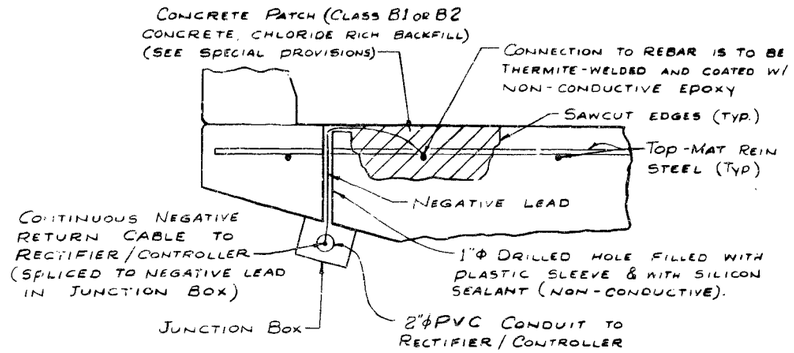


## SYSTEM NEGATIVES CONNECTION DETAIL

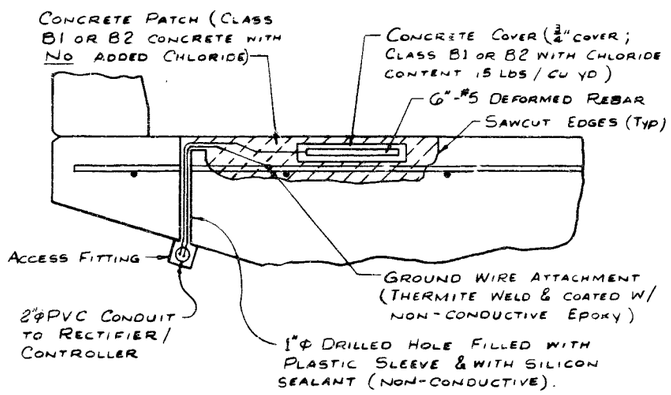


## REBAR PROBE DETAILS

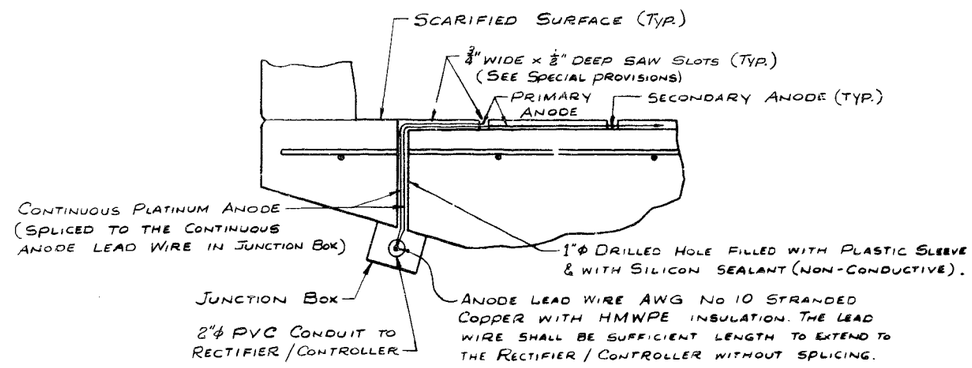


## PRIMARY ANODE TO ANODE LEAD WIRE DETAIL

NOTE: ALL CONCRETE REMOVAL SHALL BE INITIATED BY SAW CUTTING THE FIRST ½"

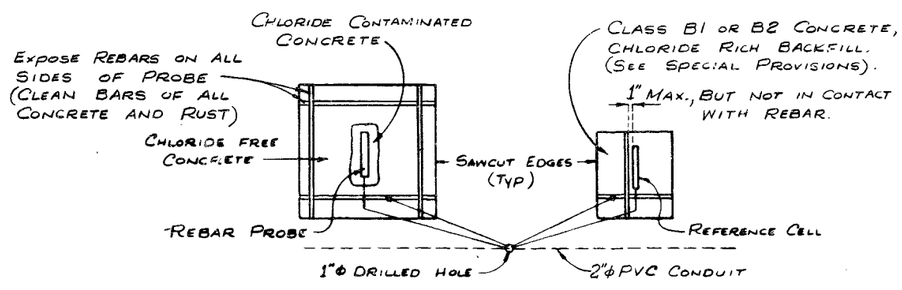


## PLAN OF REBAR PROBE AND REFERENCE CELL

*Notes: Conduit shall be schedule 40 Heavy Wall PVC (Polyvinyl Chloride Plastic). Each section of conduit shall bear the Underwriters Laboratories, Inc. (UL) label.*
*Conduit shall be secured to concrete with clamps at abt. 5'-0" cts.*
*Weepholes shall be provided at appropriate locations to drain any moisture in the conduit lines.*
*The location and direction of conduit may be shifted to meet field conditions as approved by the engineer.*
*Use expansion couplings and access fittings where appropriate.*
*The junction boxes shall be PVC molded, surface mounted, size 6"x 6"x 4". They shall be equal to "Carlon" Electrical Construction Products or "Triangle" Conduit & Cable Co. Inc. The conduit terminations and cover shall be of water tight construction.*

326

DETAILED DEC. 1984
CHECKED DEC. 1984

Note: This drawing is not to scale. Follow dimensions.



JACKSON COUNTY

A-1240R

| STATE | PROJ NO | SHEET NO |
|---|---|---|
| MO | | 32 |

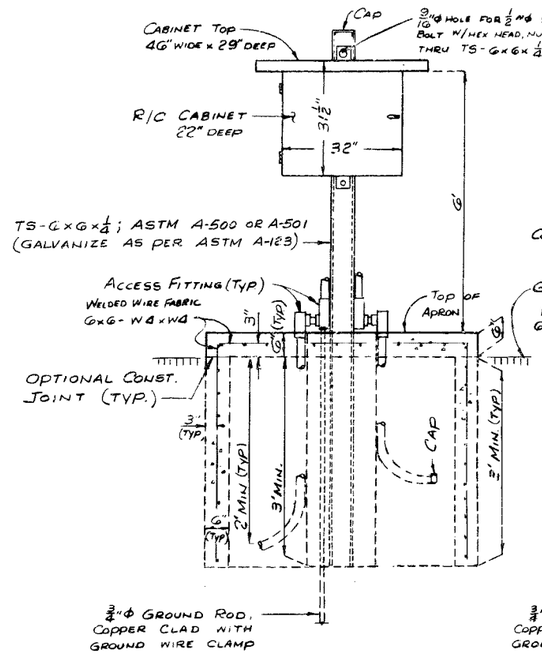


SECTION A-A

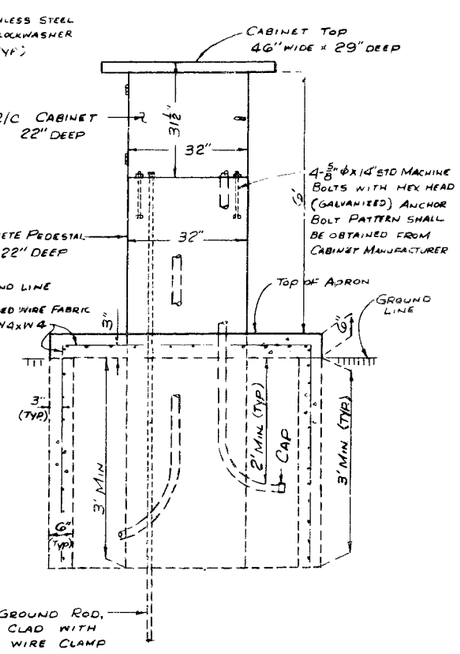


SECTION B-B

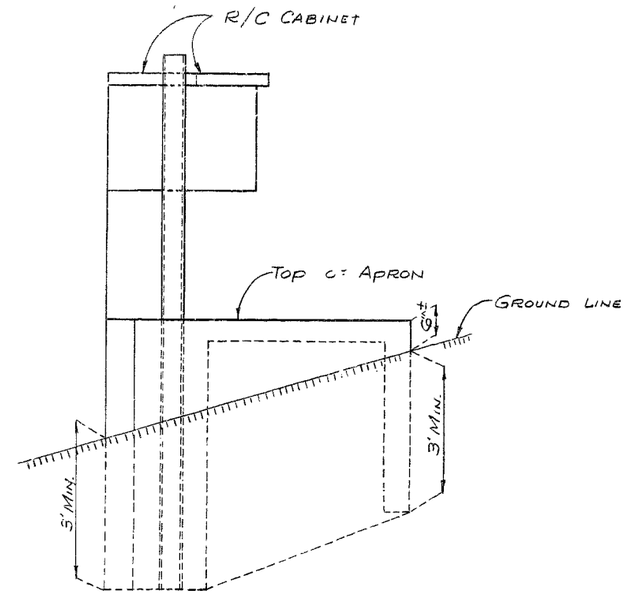


ELEVATION C-C

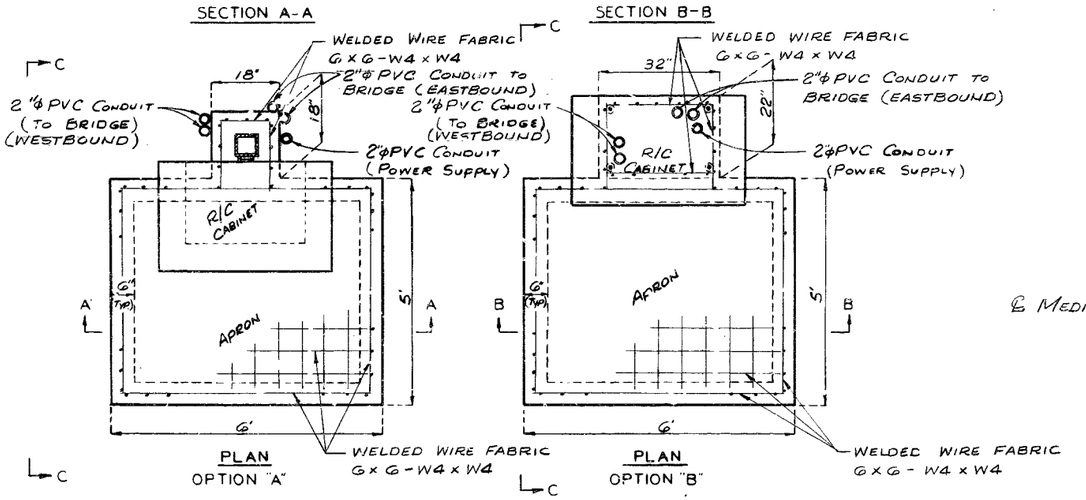


PLAN
OPTION "A"




PLAN
OPTION "B"

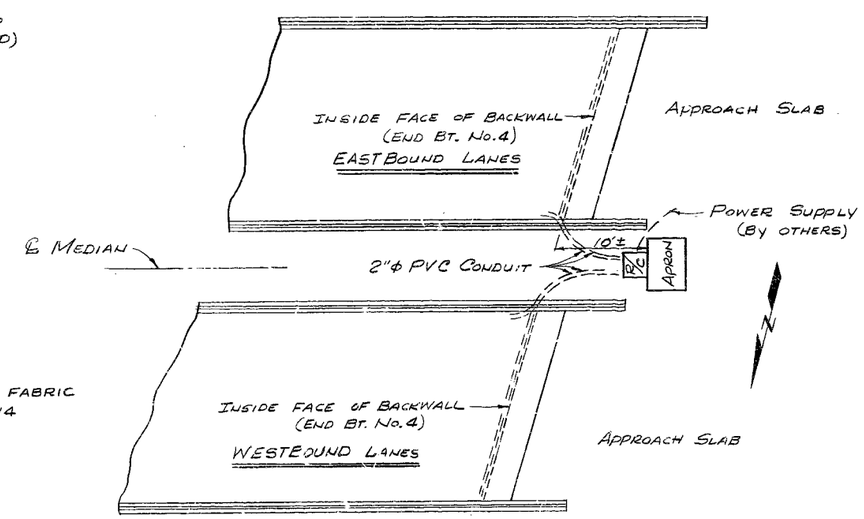


PLAN LOCATION OF RECTIFIER/CONTROLLER

*Note: The 3/4"Φ ground rods shall be sufficient length to extend a minimum of 10'-0" below bottom of concrete pedestal.*
*Ground wire shall be No. 6 AWG minimum.*
*Knockouts or drilled holes shall be provided in cabinets for all conduit. Locations of such are the responsibility of the contractor and cabinet manufacturer.*

327

DETAILED DEC. 1984
CHECKED DEC. 1984

Note: This drawing is not to scale. Follow dimensions.

Sheet No. 5 of 5

JACKSON COUNTY

A-1240R

FINAL PLANS

# MISSOURI HIGHWAY AND TRANSPORTATION COMMISSION

| STATE | PROJ NO | SHEET NO |
|---|---|---|
| MO | | |
| SEC/SUR 31 | TWP 48N | RGE 33W |

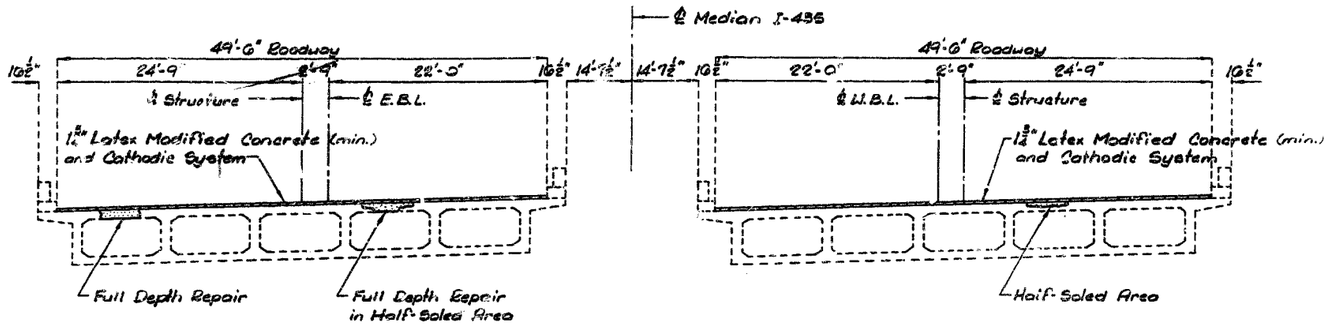


SECTION THRU SLAB

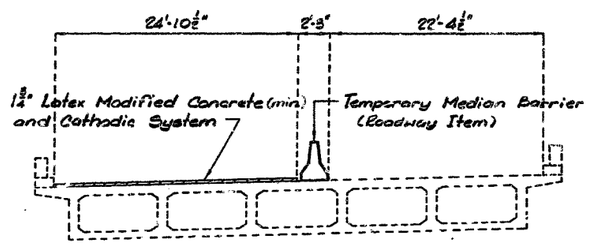


PHASE 1 - E.B.L.

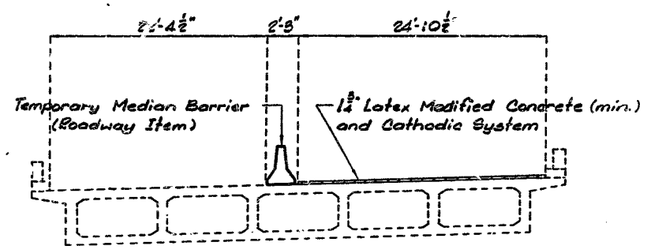


PHASE 3 - W.B.L.

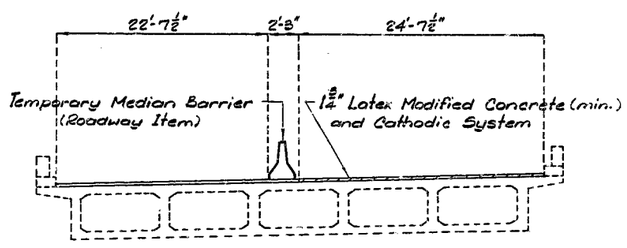


PHASE 2 - E.B.L.

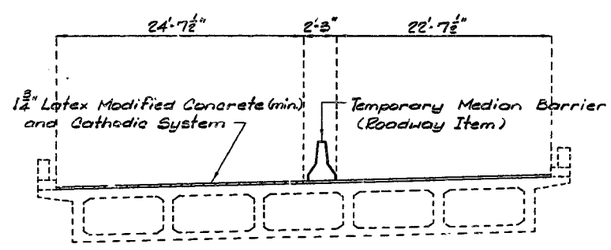


PHASE 4 - W.B.L.

GENERAL NOTES:

Design Specifications: A.A.S.H.T.O. - 1977 and Interims through 1981.

Outline of old work is indicated by light dashed lines. Heavy lines indicate new work.

Traffic over structure was maintained during construction.

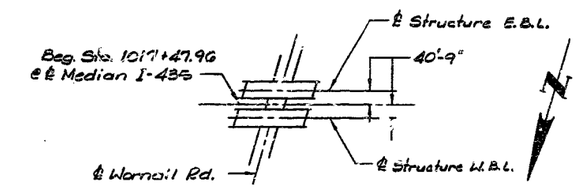


LOCATION SKETCH

ESTIMATED QUANTITIES

| ITEM | | TOTAL |
|---|---|---|
| Repairing Concrete Leak (Half-Soling) | Sq. Ft. | 158 |
| Full Depth Repair | Sq. Ft. | 0 |
| Latex Concrete Wearing Surface | Sq. Yd. | 2,274 |
| Cathodic Protection System | Lump Sum | 1 |

REPAIRS TO:

BRIDGE OVER WORNALL ROAD

STATE ROAD INTERSTATE ROUTE 435

IN KANSAS CITY

PROJECT NO. I-IR-IR6-435-1(149) STA: 1017+47.96

JOB NO. 4-1435-442B RTE. I-435

JACKSON COUNTY

DATE Jan. 15, 1985

STD.

STD.

A-1240R

DESIGNED OCT., 1984
DETAILED OCT., 1984
CHECKED OCT., 1984

Note: This drawing is not to scale. Follow dimensions.

Sheet No. 1A of 5

306

# MISSOURI HIGHWAY AND TRANSPORTATION COMMISSION

| STATE | PROJ. NO. | SHEET NO. |
|---|---|---|
| MO. | F.A.I.-435-1(254) | 13 |
| SEC. 31,32 | TWP. 48N RGE. 33W | |

**WIDEN MEDIAN RT. AND LT. - U.I.P. EXISTING TWIN (62.03', 80.04', 62.04') CONT. CONC. BOX GIRDER SPANS**

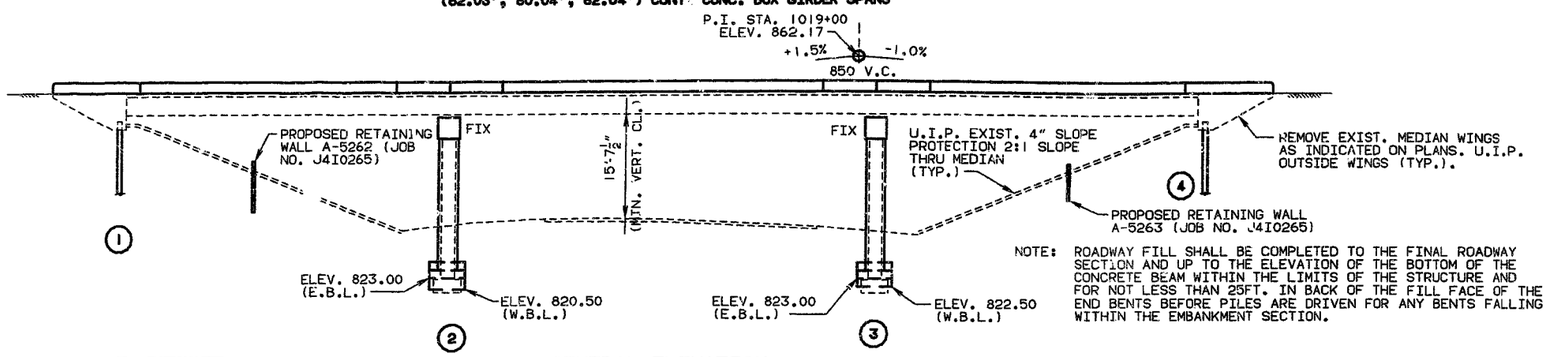


NOTE: ROADWAY FILL SHALL BE COMPLETED TO THE FINAL ROADWAY SECTION AND UP TO THE ELEVATION OF THE BOTTOM OF THE CONCRETE BEAM WITHIN THE LIMITS OF THE STRUCTURE AND FOR NOT LESS THAN 25FT. IN BACK OF THE FILL FACE OF THE END BENTS BEFORE PILES ARE DRIVEN FOR ANY BENTS FALLING WITHIN THE EMBANKMENT SECTION.

## GENERAL ELEVATION

| CURVE DATA (RTE. I-435) |
|---|
| P.I. STA. 1014+50.4 |
| Δ = 25°-14' LT. |
| D = 1° |
| T = 1282.48 |
| L = 2523.33' |
| R = 5729.65' |
| S.E. = .025 FT./FT. |
| W = 0 |

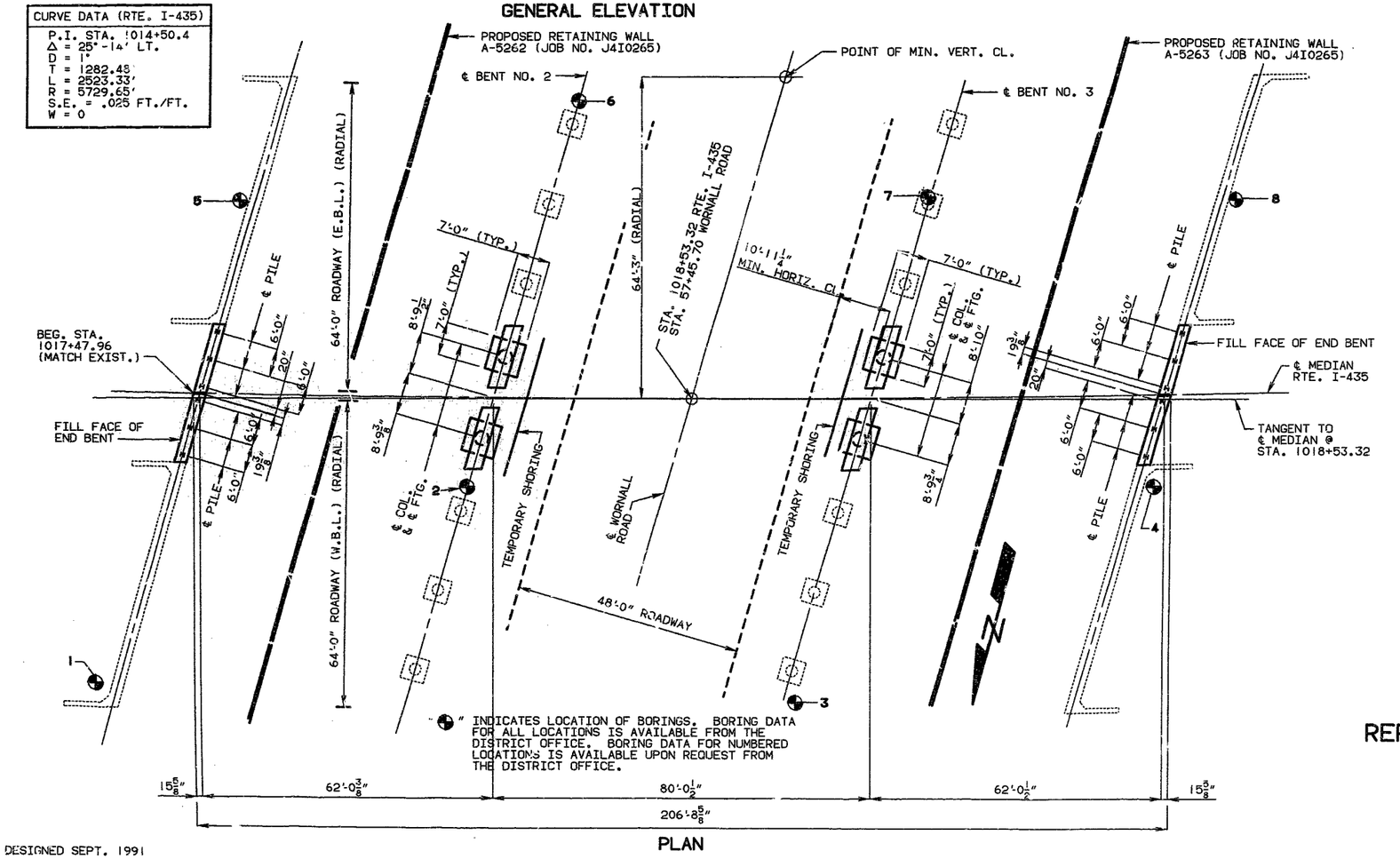


" INDICATES LOCATION OF BORINGS. BORING DATA FOR ALL LOCATIONS IS AVAILABLE FROM THE DISTRICT OFFICE. BORING DATA FOR NUMBERED LOCATIONS IS AVAILABLE UPON REQUEST FROM THE DISTRICT OFFICE.

PLAN

## GENERAL NOTES:

DESIGN SPECIFICATIONS: A.A.S.H.T.O.-1989 AND INTERIM 1990. LOAD FACTOR DESIGN. A.A.S.H.T.O.-1983 GUIDE SPECIFICATIONS FOR SEISMIC DESIGN. PERFORMANCE CATEGORY A.

DESIGN LOADING:

HS20-44 35# FUTURE WEARING SURFACE
MODIFIED 24,000# TANDEM AXLE
EARTH 120#/CU. FT., EQUIVALENT FLUID PRESSURE 45#/CU. FT.

SUPERSTRUCTURE: SIMPLY-SUPPORTED, NON-COMPOSITE FOR DEAD LOAD. CONTINUOUS COMPOSITE FOR LIVE LOAD.

DESIGN UNIT STRESSES:

CLASS B CONCRETE (SUBSTRUCTURE) F'C=3,000 PSI

CLASS B2 CONCRETE (SUPERSTRUCTURE, EXCEPT PRESTRESSED GDRS. AND SAFETY BARRIER CURB) F'C=4,000 PSI

CLASS B1 CONCRETE (SAFETY BARRIER CURB) F'C=4,000 PSI

REINFORCING STEEL (GRADE 60) FY=60,000 PSI

STEEL PILE FB=9,000 PSI

FOR PRESTRESSED GIRDER STRESSES, SEE SHT. NOS. 11, 12 AND 13.

NEOPRENE BEARING PADS: BEARINGS SHALL BE 60 DUROMETER NEOPRENE PADS. THE NEOPRENE PAD SHALL BE BONDED TO THE BEARING SEAT WITH AN EPOXY ADHESIVE AS APPROVED BY THE BEARING MANUFACTURER FOR BONDING NEOPRENE TO CONCRETE.

JOINT FILLER: ALL JOINT FILLER SHALL MEET THE REQUIREMENTS OF STD. SPEC. 1057.2.4, EXCEPT AS NOTED.

REINFORCING STEEL: MINIMUM CLEARANCE TO REINFORCING STEEL SHALL BE 1 1/2", UNLESS OTHERWISE SHOWN.

BARS BONDED IN OLD CONCRETE NOT REMOVED SHALL BE CLEANLY STRIPPED AND EMBEDDED INTO NEW CONCRETE WHERE POSSIBLE. IF LENGTH IS AVAILABLE, OLD BARS SHALL EXTEND INTO NEW CONCRETE AT LEAST 30 DIAMETERS FOR DEFORMED BARS, UNLESS OTHERWISE NOTED.

CONSTRUCTION CLEARANCE: A MINIMUM VERTICAL CLEARANCE OF 14'-9" FROM CROWN OF EXISTING LANES AND A MINIMUM LATERAL CLEARANCE OF 28'-0" CENTERED ON EXISTING LANES SHALL BE MAINTAINED DURING CONSTRUCTION.

TRAFFIC MAINTAINED: TRAFFIC OVER STRUCTURE TO BE MAINTAINED DURING CONSTRUCTION. (SEE ROADWAY PLANS)

EXISTING STRUCTURE: OUTLINE OF OLD WORK IS INDICATED BY LIGHT DASHED LINES. HEAVY LINES INDICATE NEW WORK.

CONTRACTOR SHALL VERIFY ALL DIMENSIONS IN FIELD BEFORE ORDERING NEW MATERIALS.

RESIN ANCHOR SYSTEMS: THE CONTRACTOR SHALL USE ONE OF THE RESIN ANCHOR SYSTEMS LISTED IN THE SPECIAL PROVISIONS. THESE ANCHOR SYSTEMS SHALL BE INSTALLED ACCORDING TO THE MANUFACTURER'S SPECIFICATIONS EXCEPT AS MODIFIED BY THE JOB SPECIAL PROVISIONS AND THAT A PLAIN, #5, GRADE 60 REINFORCING BAR 2'-3" LONG SHALL BE SUBSTITUTED FOR THE THREADED ROD STUD.

IN ORDER TO MAINTAIN GRADE AND A MINIMUM THICKNESS OF OVERLAY AS SHOWN ON PLANS IT MAY BE NECESSARY TO USE ADDITIONAL QUANTITIES OF OVERLAY AT VARIOUS LOCATIONS THROUGHOUT THE STRUCTURE. NO PAYMENT WILL BE ALLOWED FOR ADDITIONAL LABOR, MATERIALS OR EQUIPMENT FOR VARIATIONS IN THICKNESS OF OVERLAY.

COST OF FURNISHING AND INSTALLING THE ANCHOR SYSTEM COMPLETE IN PLACE SHALL BE INCLUDED IN THE PRICE BID PER LINEAR FOOT OF SAFETY BARRIER CURB.

ALL BENTS ARE PARALLEL.

ROADWAY SURFACING ADJACENT TO BRIDGE ENDS TO MATCH BRIDGE OVERLAY (ROADWAY ITEM).

B.M. ELEV.859.61 A-1240 P.K. NAIL IN END N. WING BT. #1 LT. LANE (E.B.L.) I-435 @ STA. 1017+55± & 15' ± LT/O ℄ MED.

# REPAIRS TO: BRIDGE OVER WORNALL ROAD

**STATE ROAD INTERSTATE ROUTE 435**

**ABOUT 5 MILES NORTH OF MARTIN CITY**

**PROJECT NO.** F.A.I.-435-1(254) **STA.** 1017+47.96

**JOB NO.** J4I0080 7B **RTE.** I-435

**JACKSON COUNTY**

DATE: 8/10/92

| STD. 611.60 |
|---|
| STD. 617.00 |
| STD. 706.35 |
| A-1240R1 |

DESIGNED SEPT. 1991
DETAILED SEPT. 1991
CHECKED MAY 1992

NOTE: THIS DRAWING IS NOT TO SCALE. FOLLOW DIMENSIONS.

SHEET NO. 1 OF 35.

SEE FINAL PLANS

46-8

| STATE | PROJ. NO. | SHEET NO. |
|---|---|---|
| MO. | | 14 |

NOTE: THE REQUIRED SHIM PLATE SHALL BE PLACED BETWEEN LAYERS OF ELASTOMER AND MOLDED TOGETHER TO FORM AN INTERGRAL UNIT.

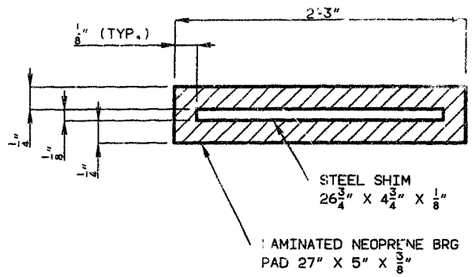


**DETAILS OF LAMINATED NEOPRENE BEARING PAD**

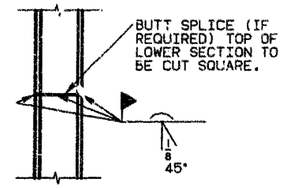


**DETAIL OF STEEL PILE SPLICE**

## ESTIMATED QUANTITIES

| ITEM | | SUBSTR. | SUPERSTR | TOTAL |
|---|---|---|---|---|
| CURB REMOVAL (BRIDGES) | LIN. FT. | | 899 | 899 |
| PARTIAL REMOVAL OF SUBSTR. CONCRETE | LUMP SUM | | | 1 |
| PARTIAL REMOVAL OF EXIST. BRIDGE DECK | SQ. FT. | | 414 | 414 |
| CLASS 1 EXCAVATION | CU. YD. | 250 | | 250 |
| TEMPORARY SHORING | LUMP SUM | | | 1 |
| STRUCTURAL STEEL PILES (10") | LIN. FT. | 372 | | 372 |
| CLASS B CONCRETE (SUBSTR.) | CU. YD. | 94.2 | | 94.2 |
| CLASS B2 CONC.(SUPSTR.) CONC. ON BOX GDR. | CU. YD. | | 191.8 | 191.8 |
| SAFETY BARRIER CURB | LIN. FT. | | 414 | 414 |
| * 16-1/2" SAFETY BARRIER CURB | LIN. FT. | | 450 | 450 |
| PLAIN NEOPRENE BEARING PADS | EACH | | 16 | 16 |
| LAMINATED NEOPRENE BEARING PADS | EACH | | 32 | 32 |
| SLAB EDGE REPAIR (BRIDGES) | LIN. FT. | | 30 | 30 |
| SUPERSTRUCTURE REPAIR (UNFORMED) | SQ. FT. | | 30 | 30 |
| LATEX CONC. WEARING SURFACE | SQ. YD. | | 666 | 666 |
| P/S CONC. BOX GDR. (62' SPAN) | EACH | | 16 | 16 |
| P/S CONC. BOX GDR. (80' SPAN) | EACH | | 8 | 8 |
| REINFORCING STEEL (BRIDGES) | POUND | 11,980 | 37,740 | 49,720 |
| CATHODIC PROTECTION SYSTEM | LUMP SUM | | | 1 |
| SLAB DRAINS | EACH | | 10 | 10 |
| FABRICATED SIGN SUPPORT BRACKETS (STEEL) | LUMP SUM | | | 1 |

## PILE AND FOOTING DATA

| BENT NUMBER | | 1 EBL | 1 WBL | 2 EBL | 2 WBL | 3 EBL | 3 WBL | 4 EBL | 4 WBL |
|---|---|---|---|---|---|---|---|---|---|
| BEARING PILE | PILE TYPE AND SIZE | HP10X42 | HP10X42 | | | | | HP10X42 | HP10X42 |
| | NUMBER | 3 | 3 | | | | | 3 | 3 |
| | APPROXIMATE LENGTH (FT.) | 31 | 31 | | | | | 31 | 31 |
| | DESIGN BEARING (TONS) | 49 | 49 | | | | | 49 | 49 |
| | HAMMER ENERGY REQ'D. (FT/LBS) | 11,000 | 11,000 | | | | | 11,000 | 11,000 |
| SPREAD FOOTINGS | FOUNDATION MATERIAL | | | ROCK | ROCK | ROCK | ROCK | | |
| | DESIGN BEARING TONS/SQ. FT. | | | 10.6 | 10.6 | 10.6 | 10.6 | | |

NOTE: MINIMUM ENERGY REQUIREMENT OF HAMMER BASED ON PLAN LENGTH AND DESIGN BEARING VALUE OF PILES. ALL PILE SHALL BE DRIVEN TO PRACTICAL REFUSAL.

NOTE: ALL CONCRETE ABOVE THE CONSTRUCTION JOINT IN END BENTS IS INCLUDED WITH SUPERSTRUCTURE QUANTITIES.

ALL REINFORCEMENT IN THE END BENTS IS INCLUDED WITH SUPERSTRUCTURE QUANTITIES.

THE COST OF FURNISHING, FABRICATING AND INSTALLING NEOPRENE BEARING PADS, COMPLETE-IN-PLACE, WILL BE PAID FOR AT THE CONTRACT UNIT PRICE FOR PLAIN AND LAMINATED NEOPRENE BEARING PADS PER EACH.

* SAFETY BARRIER CURB SHALL BE CAST-IN-PLACE OR SLIP-FORM OPTION.

COST OF FURNISHING AND INSTALLING RESIN ANCHOR SYSTEMS, COMPLETE IN PLACE, SHALL BE INCLUDED IN THE UNIT PRICE BID FOR CONCRETE.

| STATE | PROJ. NO. | SHEET NO. |
|---|---|---|
| MO. | | 15 |

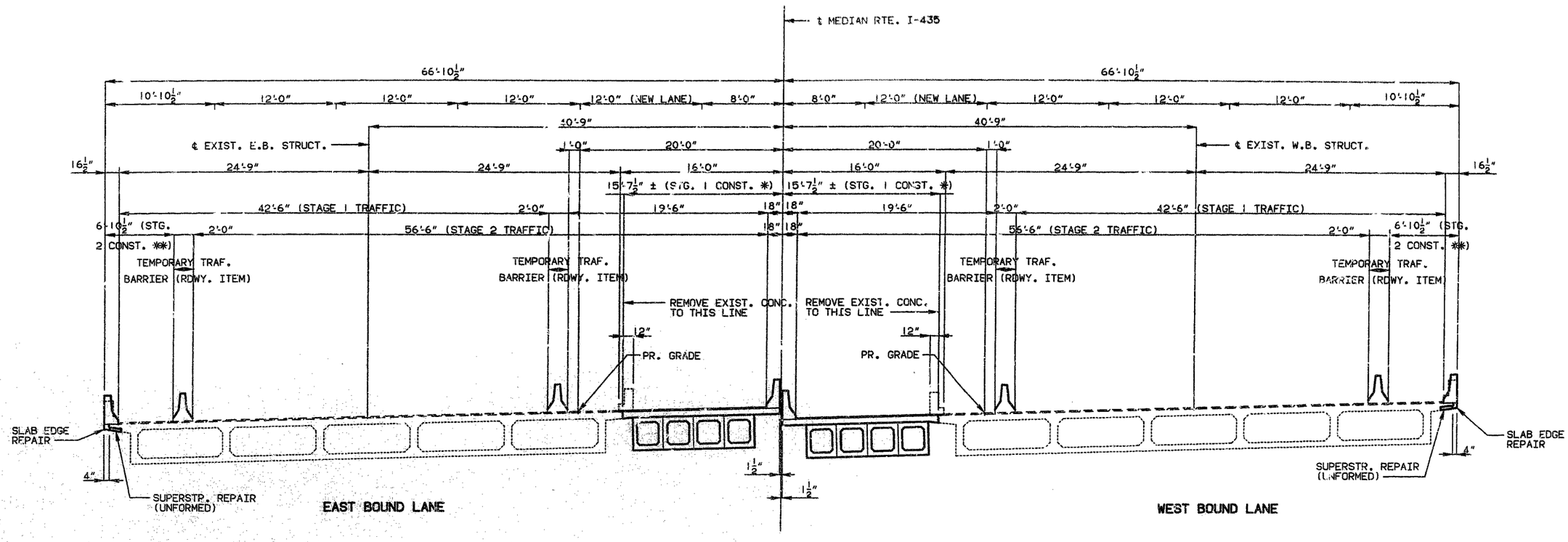


## STAGE CONSTRUCTION SEQUENCE

(NOTE: ALL DIMENSIONS ARE RADIAL AND HORIZONTAL)

**NOTE:**

* INSTALL A CATHODIC PROTECTION SYSTEM WITH 1¾" LATEX MODIFIED CONCRETE ON NEW SLAB, ROUGHEN NEW SLAB BEFORE APPLYING 1¾" OVERLAY.

** REMOVE CURB AND PARAPET AND REPLACE WITH 16½" SAFETY BARRIER CURB.

48 10

| STATE | PROJ. NO. | NO. |
|---|---|---|
| MO. | | 16 |

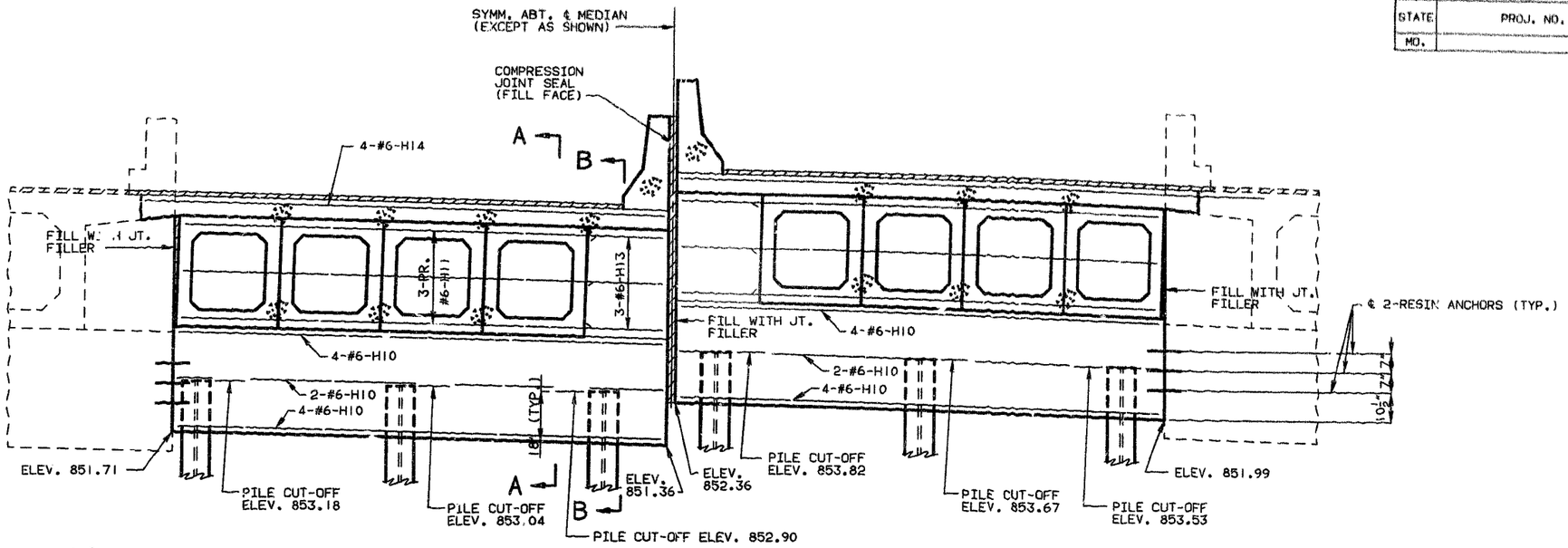


## SECTION NEAR END BENT

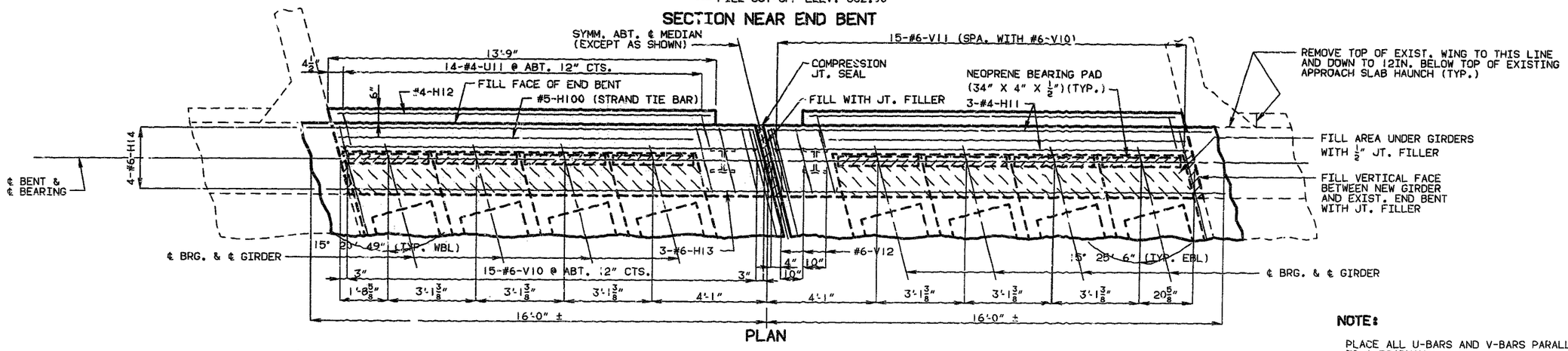


## PLAN

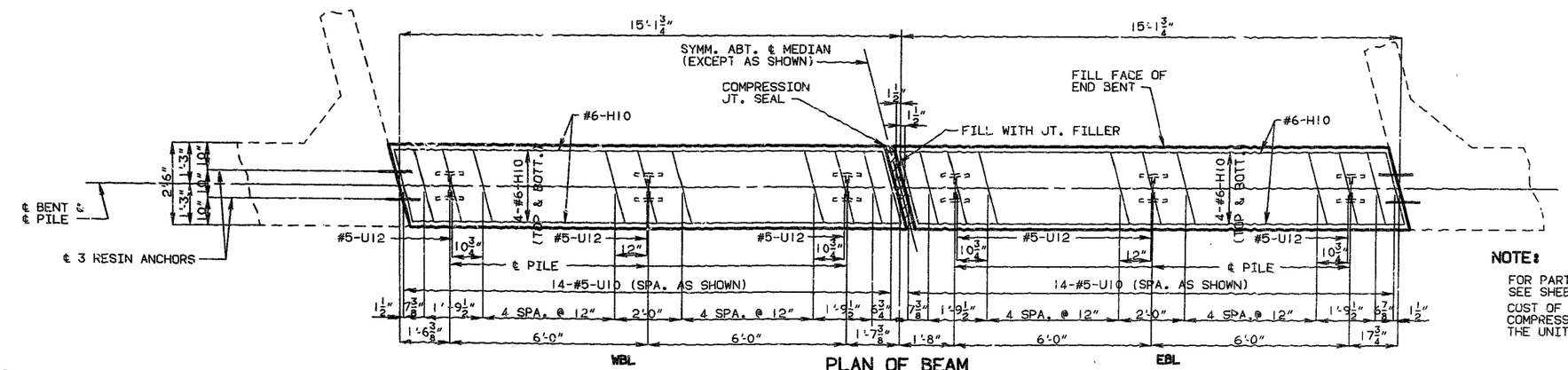


## PLAN OF BEAM

## END BENT NO. 1

**NOTE:**

PLACE ALL U-BARS AND V-BARS PARALLEL TO ℄ ROADWAY.

FOR SECTION A-A AND SECTION B-B SEE SHEET NO. 5.

ALL CONCRETE IN THE END BENT ABOVE TOP OF BEAM AND BELOW TOP OF SLAB SHALL BE CLASS B2.

STRANDS AT END OF GIRDER SHALL BE FIELD BENT OR, IF NECESSARY, CUT IN FIELD TO MAINTAIN 1-1/2" MINIMUM CLEARANCE TO FILL FACE OF END BENT.

FOR DETAIL OF STEEL PILE SPLICE, SEE SHEET NO. 3.

**NOTE:**

FOR PART CROSS SECTION THRU COMP. JOINT SEAL SEE SHEET NO 5.

COST OF FURNISHING AND INSTALLING PREFORMED COMPRESSION JOINT SEAL SHALL BE INCLUDED IN THE UNIT PRICE BID FOR OTHER ITEMS.

DETAILED SEPT. 1991
CHECKED MAY 1992

NOTE: THIS DRAWING IS NOT TO SCALE. FOLLOW DIMENSIONS.



JACKSON COUNTY A-1240R1

| STATE | PROJ. NO. | SHEET NO. |
|---|---|---|
| NO. | | 17 |

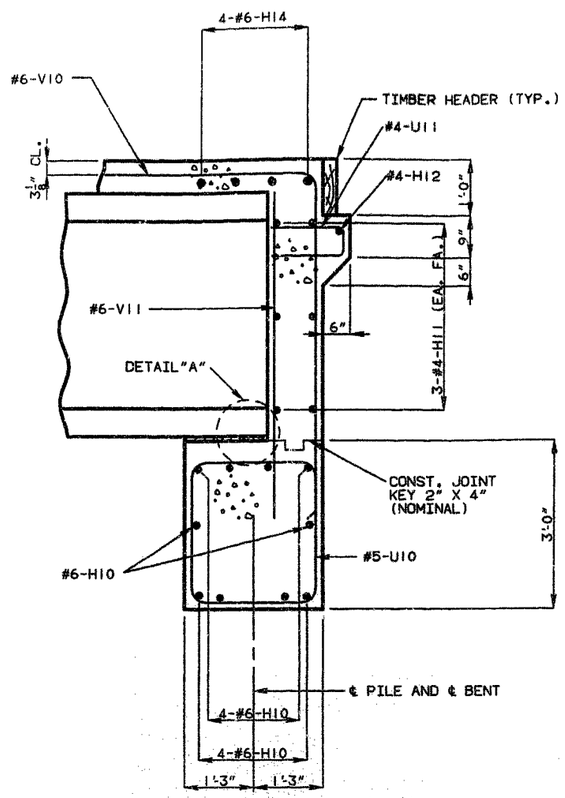


SECTION A-A

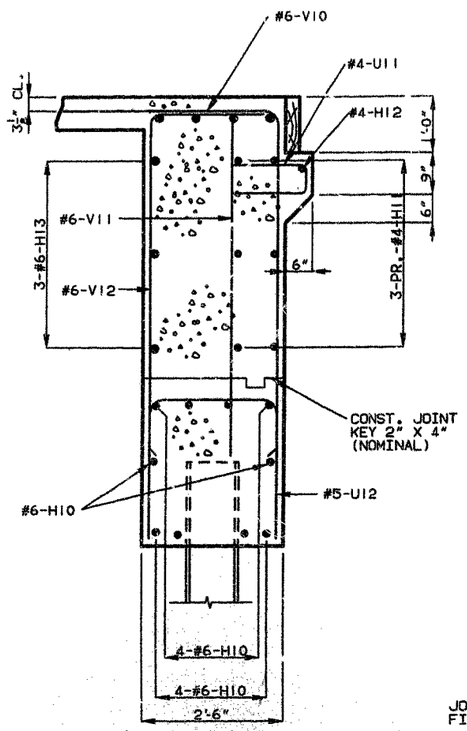


SECTION B-B

SECTIONS AT END BENT NO. 1

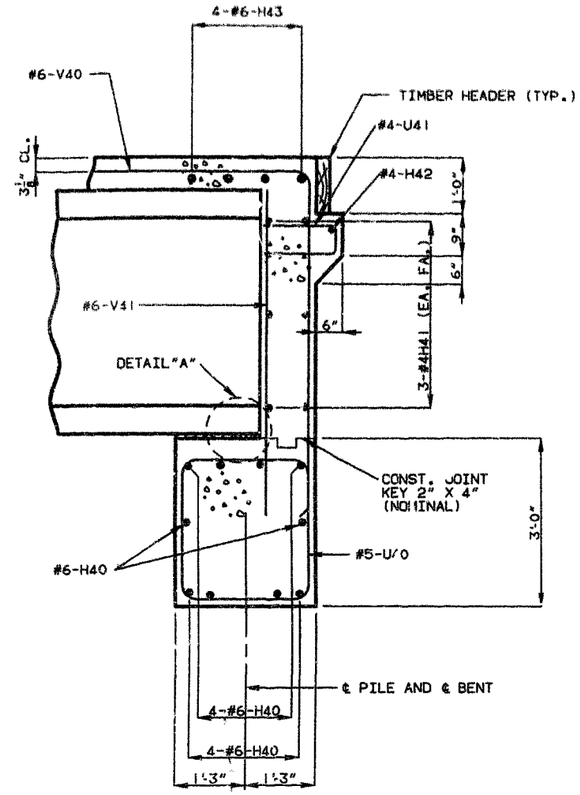


SECTION C-C

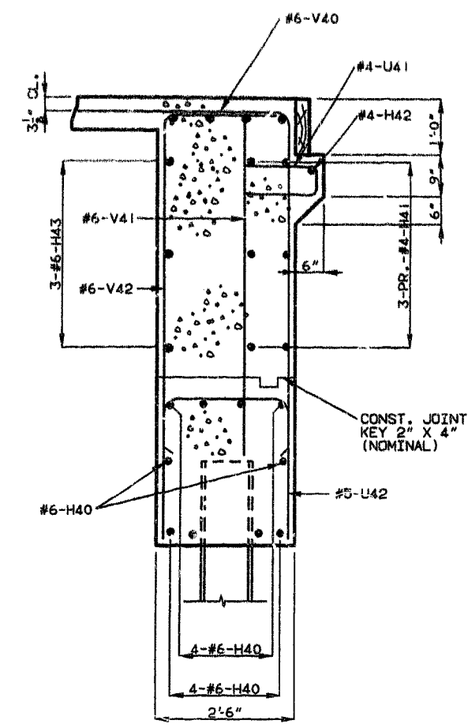


SECTION D-D

SECTIONS AT END BENT NO. 4

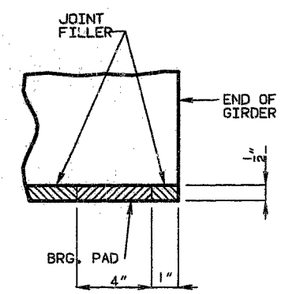


DETAIL "A"

| * SUBSTRUCTURE QUANTITY TABLE FOR END BENT NO. 1 | | |
|---|---|---|
| ITEM | | QUANTITY |
| CLASS I EXCAVATION | CU. YDS. | 15 |
| STRUCTURAL STEEL PILE (10IN.) | LIN. FT. | 186 |
| CLASS B CONCRETE (SUBSTRUCTURE) | CU. YDS. | 8.3 |
| | | |
| | | |
| | | |

| * SUBSTRUCTURE QUANTITY TABLE FOR END BENT NO. 4 | | |
|---|---|---|
| ITEM | | QUANTITY |
| CLASS I EXCAVATION | CU. YDS. | 15 |
| STRUCTURAL STEEL PILE (10IN.) | LIN. FT. | 186 |
| CLASS B CONCRETE (SUBSTRUCTURE) | CU. YDS. | 8.4 |
| | | |
| | | |
| | | |

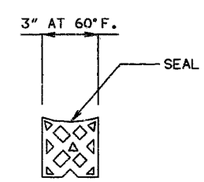


PART CROSS SECTION
THRU COMP. JOINT SEAL

NOTE: DEPTH OF SEAL SHALL NOT BE LESS THAN WIDTH OF SEAL.

**NOTE:**

FOR LOCATION OF SECTION A-A AND B-B SEE SHEET NO. 4.
FOR LOCATION OF SECTION C-C AND D-D SEE SHEET NO. 10.
FOR DETAILS OF TIMBER HEADER SEE SHEET NO. 24.
FOR DETAIL OF STEEL PILE SPLICE, SEE SHEET NO. 2.
* WORK THIS TABLE WITH THE ESTIMATED QUANTITIES ON SHEET NO. 2.

DETAILED SEPT. 1991
CHECKED MAY 1992

NOTE: THIS DRAWING IS NOT TO SCALE. FOLLOW DIMENSIONS.



JACKSON COUNTY

A-1240R1

SQ 12

| STATE | PROJ. NO. | SHEET NO. |
|---|---|---|
| MO. | | 18 |

**NOTE:**

FOR SECTION THRU KEY SEE SHEET NO. 7.
FOR DETAILS OF LAMINATED NEOPRENE BEARING PAD, SEE SHEET NO. 2.

(1) 1-LAYER OF 50# ROOFING FELT BETWEEN JOINT FILLER.

*** SUBSTRUCTURE QUANTITY TABLE FOR BENT NO. 2 (E.B.L.)**

| ITEM | | QUANTITY |
|---|---|---|
| CLASS I EXCAVATION | CU. YDS. | 55 |
| CLASS B CONCRETE (SUBSTRUCTURE) | CU. YDS. | 19.2 |
| REINFORCING STEEL | LBS. | 2,960 |
| | | |

* WORK THIS TABLE WITH THE ESTIMATED QUANTITIES ON SHEET NO. 2.

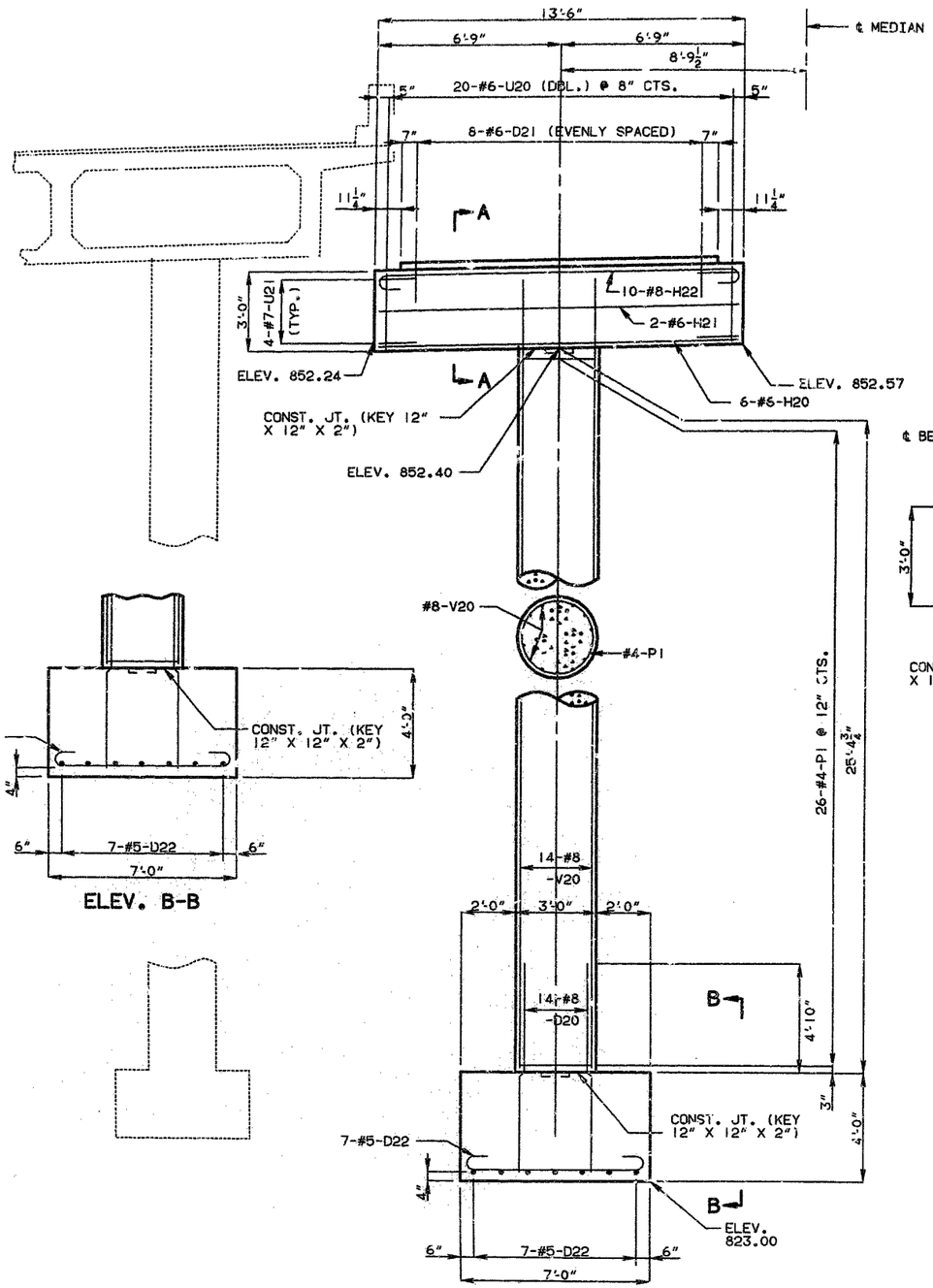


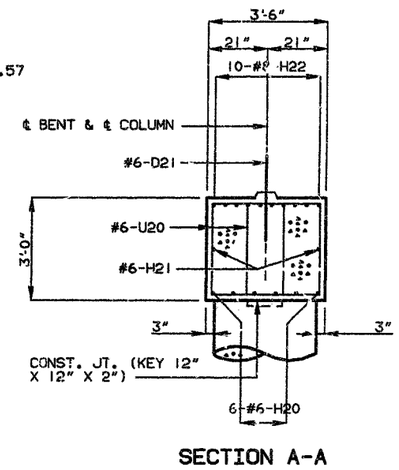


SECTION A-A

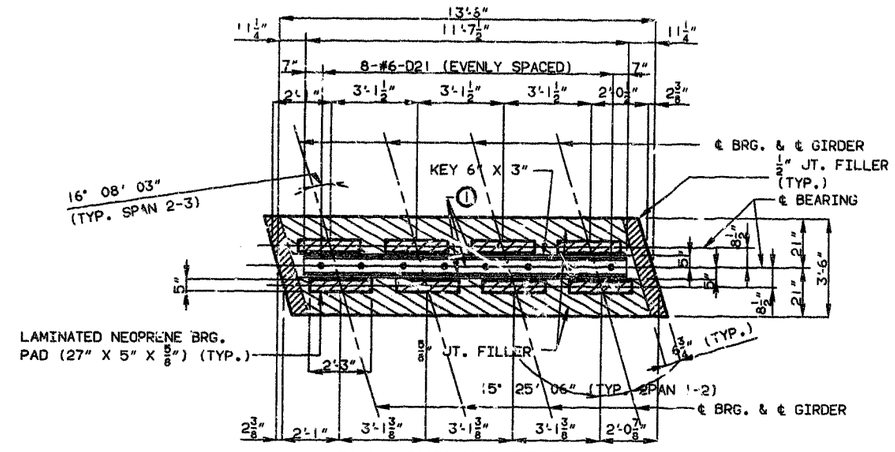


PLAN SHOWING BEARINGS

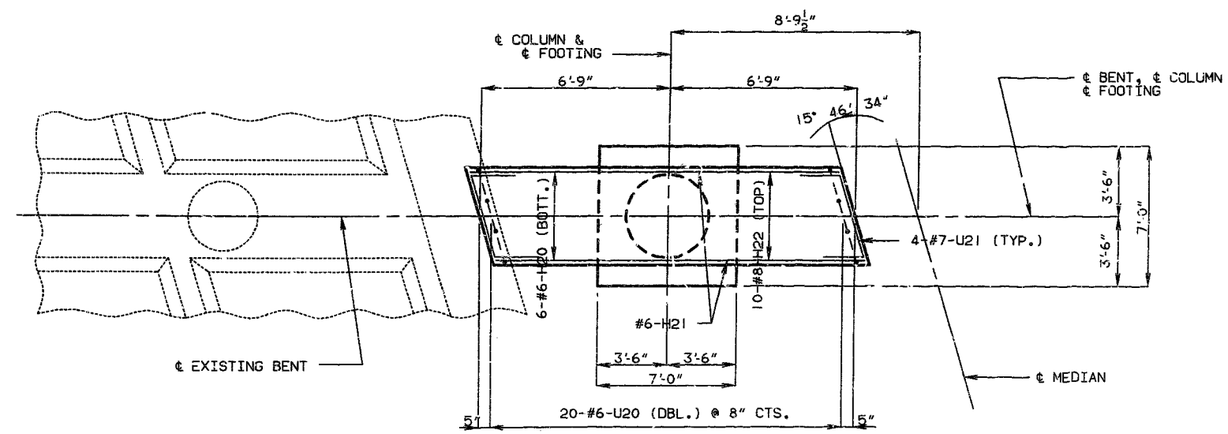


PLAN SHOWING REINFORCEMENT

INT. BT. 2 E.B.L.

DETAILED SEPT. 1991
CHECKED MAY 1992

NOTE: THIS DRAWING IS NOT TO SCALE. FOLLOW DIMENSIONS.

SHEET NO. 6 OF 35.

SEE FINAL PLANS

JACKSON COUNTY

A-1240R1

SEE FINAL

5413

| STATE | PROJ. NO. | SHEET NO. |
|---|---|---|
| MO. | | 19 |

**NOTE:**

FOR DETAILS OF LAMINATED NEOPRENE BEARING PAD SEE SHEET NO. 2.

① 1-LAYER OF 50# ROOFING FELT BETWEEN JOINT FILLER.

| * SUBSTRUCTURE QUANTITY TABLE FOR BENT NO. 2 (W.B.L.) | | |
|---|---|---|
| ITEM | | QUANTITY |
| CLASS 1 EXCAVATION | CU. YDS. | 55 |
| CLASS B CONCRETE (SUBSTRUCTURE) | CU. YDS. | 19.7 |
| REINFORCING STEEL | LBS. | 3,060 |
| | | |

* WORK THIS TABLE WITH THE ESTIMATED QUANTITIES ON SHEET NO. 2.

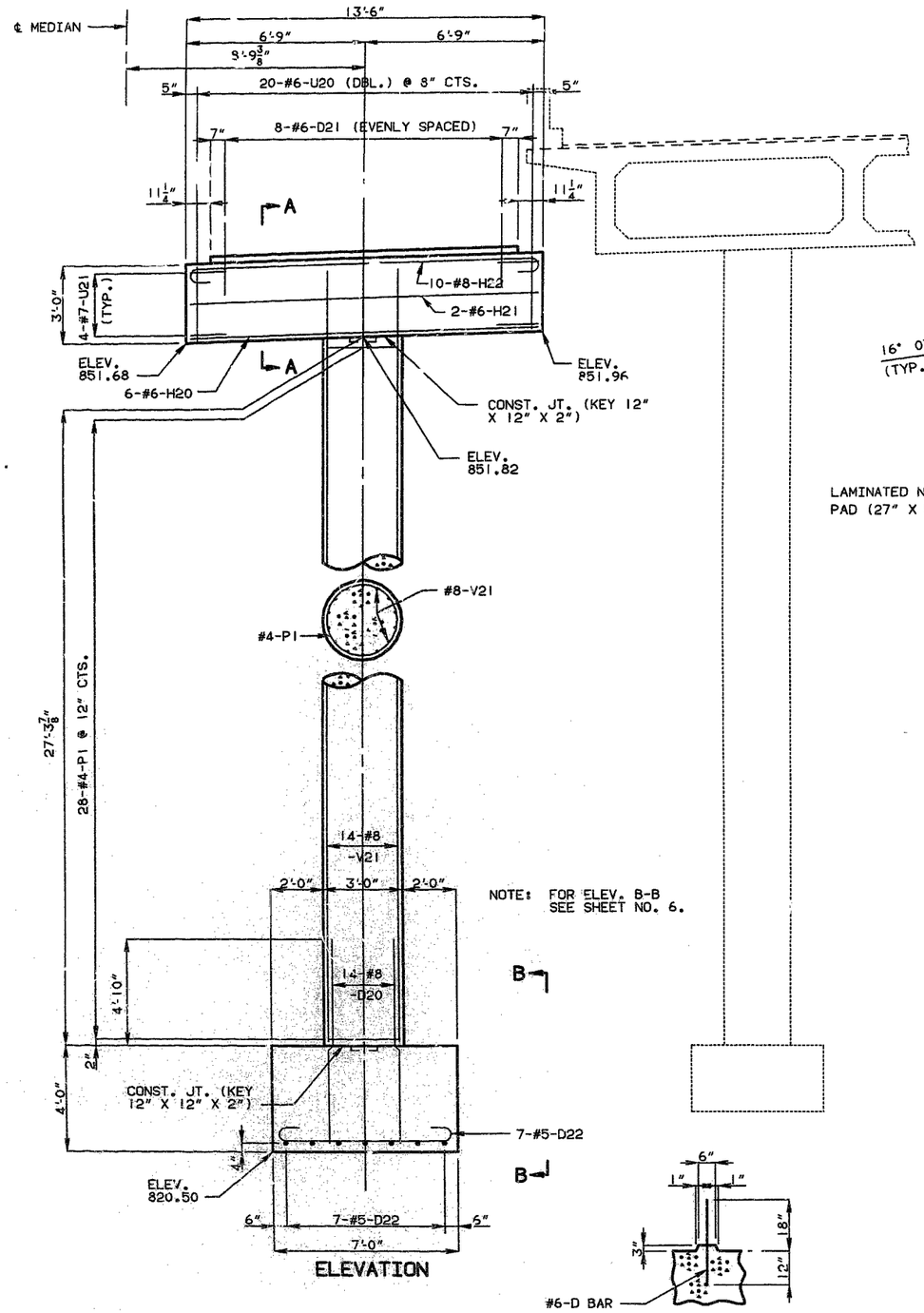


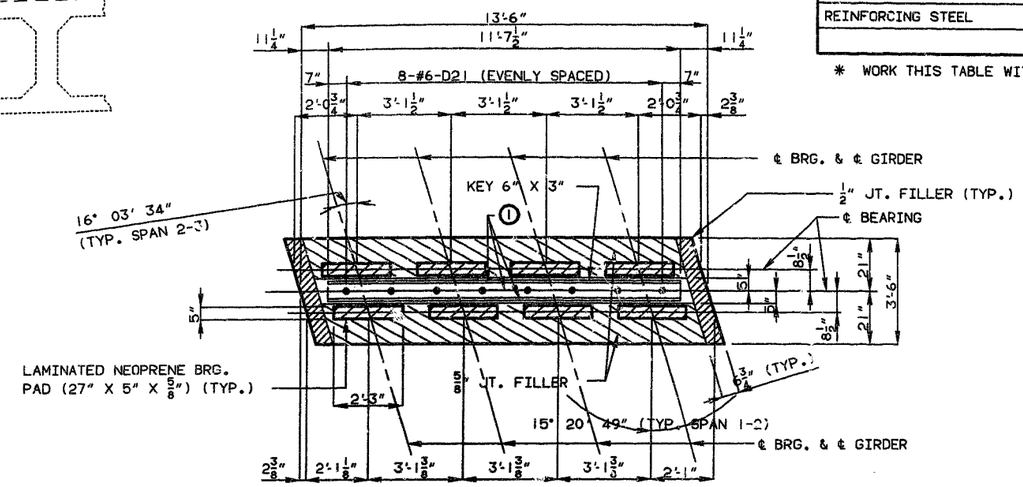


PLAN SHOWING BEARINGS

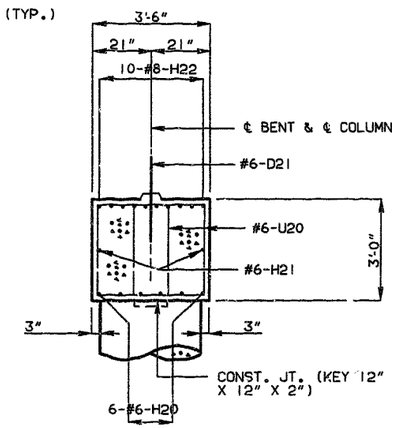


SECTION A-A

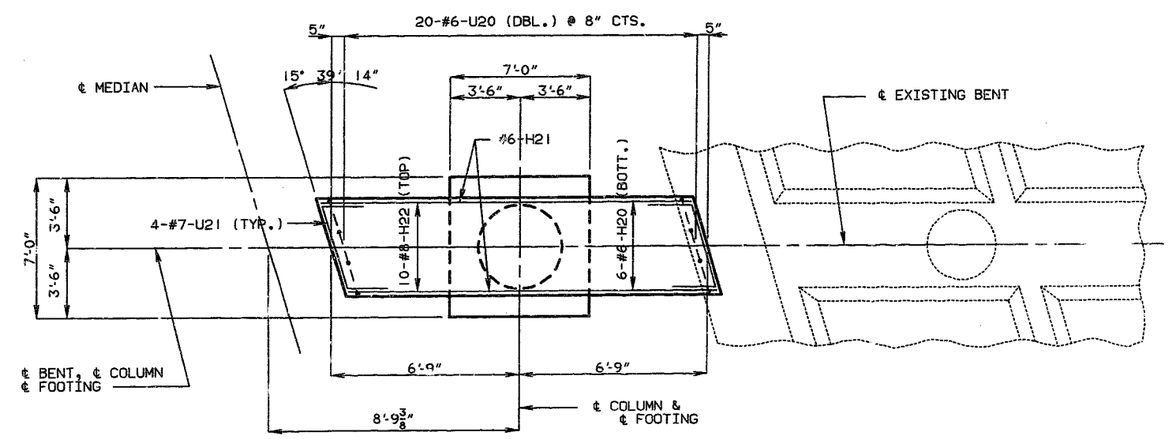


PLAN SHOWING REINFORCEMENT

# INT. BT. 2 W.B.L.

DETAILED SEPT. 1991
CHECKED MAY 1992

NOTE: THIS DRAWING IS NOT TO SCALE. FOLLOW DIMENSIONS.

SHEET NO. 7 OF 35.

JACKSON COUNTY

SEE FINAL PLANS

52/14

| STATE | PROJ. NO. | SHEET NO. |
|---|---|---|
| MO. | | 20 |

**NOTE:**

FOR DETAILS OF LAMINATED NEOPRENE BEARING PAD SEE SHEET NO. 2.

FOR SECTION THRU KEY SEE SHEET NO. 7.

(1) 1-LAYER OF 50# ROOFING FELT BETWEEN JOINT FILLER.

*** SUBSTRUCTURE QUANTITY TABLE FOR BENT NO. 3 (E.B.L.)**

| ITEM | | QUANTITY |
|---|---|---|
| CLASS I EXCAVATION | CU. YDS. | 55 |
| CLASS B CONCRETE (SUBSTRUCTURE) | CU. YDS. | 19.3 |
| REINFORCING STEEL | LBS. | 2,980 |
| | | |

* WORK THIS TABLE WITH THE ESTIMATED QUANTITIES ON SHEET NO. 2.

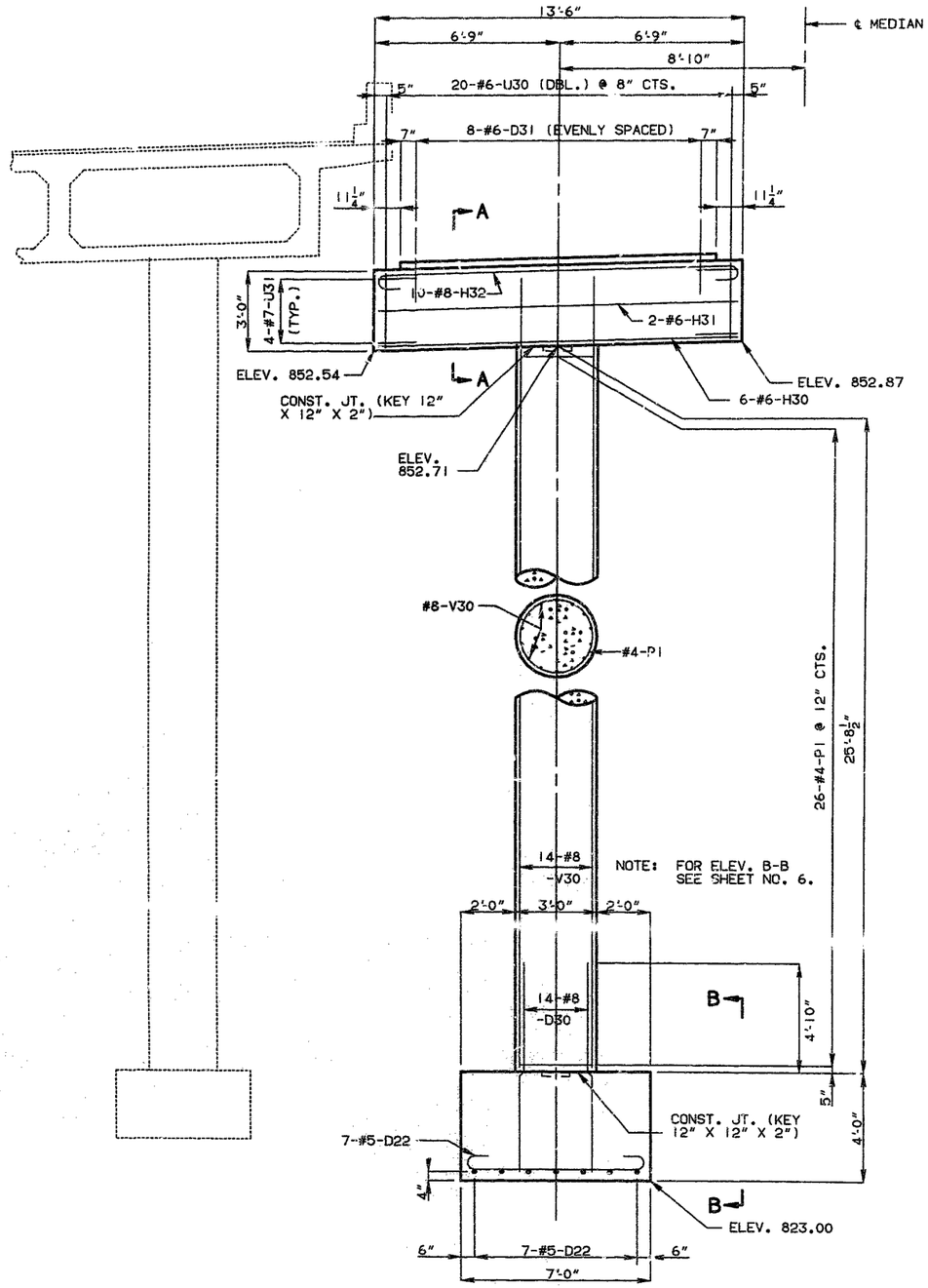


ELEVATION

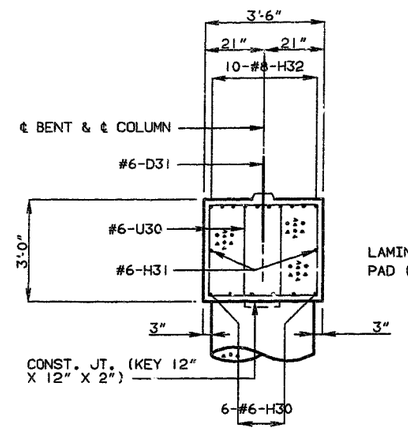


SECTION A-A

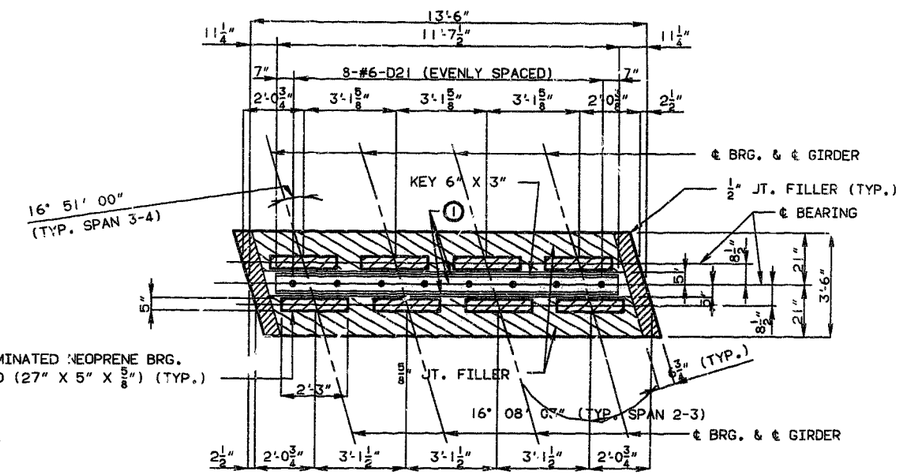


PLAN SHOWING BEARINGS

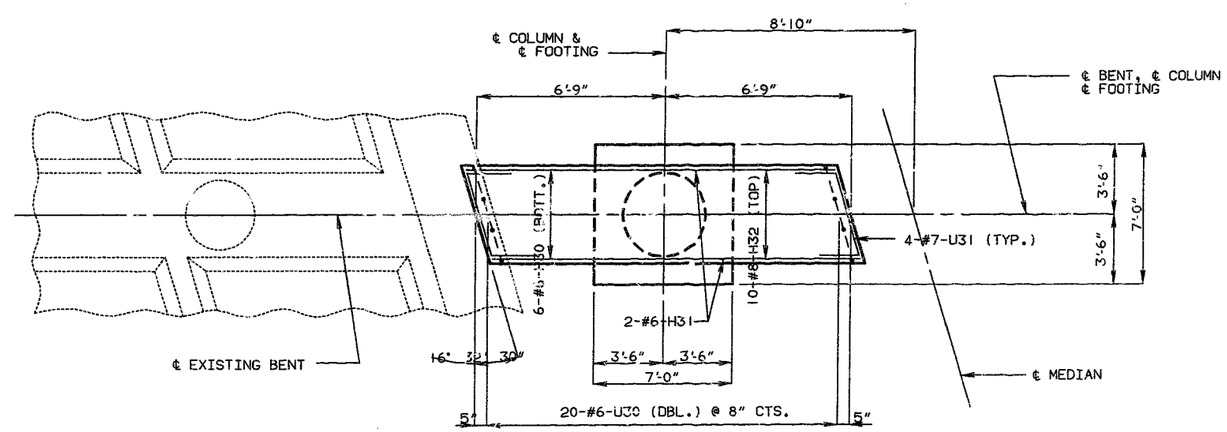


PLAN SHOWING REINFORCEMENT

INT. BT. 3 E.B.L.

DETAILED SEPT. 1991
CHECKED MAY 1992

NOTE: THIS DRAWING IS NOT TO SCALE. FOLLOW DIMENSIONS.

SHEET NO. 8 OF 35.

JACKSON COUNTY

SEE FINAL PLANS

53/5

| STATE | PROJ. NO. | SHEET NO. |
|---|---|---|
| MO. | | 21 |

**NOTE:**

FOR DETAILS OF LAMINATED NEOPRENE BEARING PAD SEE SHEET NO. 2.

① 1-LAYER OF 50# ROOFING FELT BETWEEN JOINT FILLER.

| * SUBSTRUCTURE QUANTITY TABLE FOR BENT NO. 3 (W.B.L.) | | |
|---|---|---|
| ITEM | | QUANTITY |
| CLASS I EXCAVATION | CU. YDS. | 55 |
| CLASS B CONCRETE (SUBSTRUCTURE) | CU. YDS. | 19.3 |
| REINFORCING STEEL | LBS. | 2,980 |
| | | |

* WORK THIS TABLE WITH THE ESTIMATED QUANTITIES ON SHEET NO. 2.

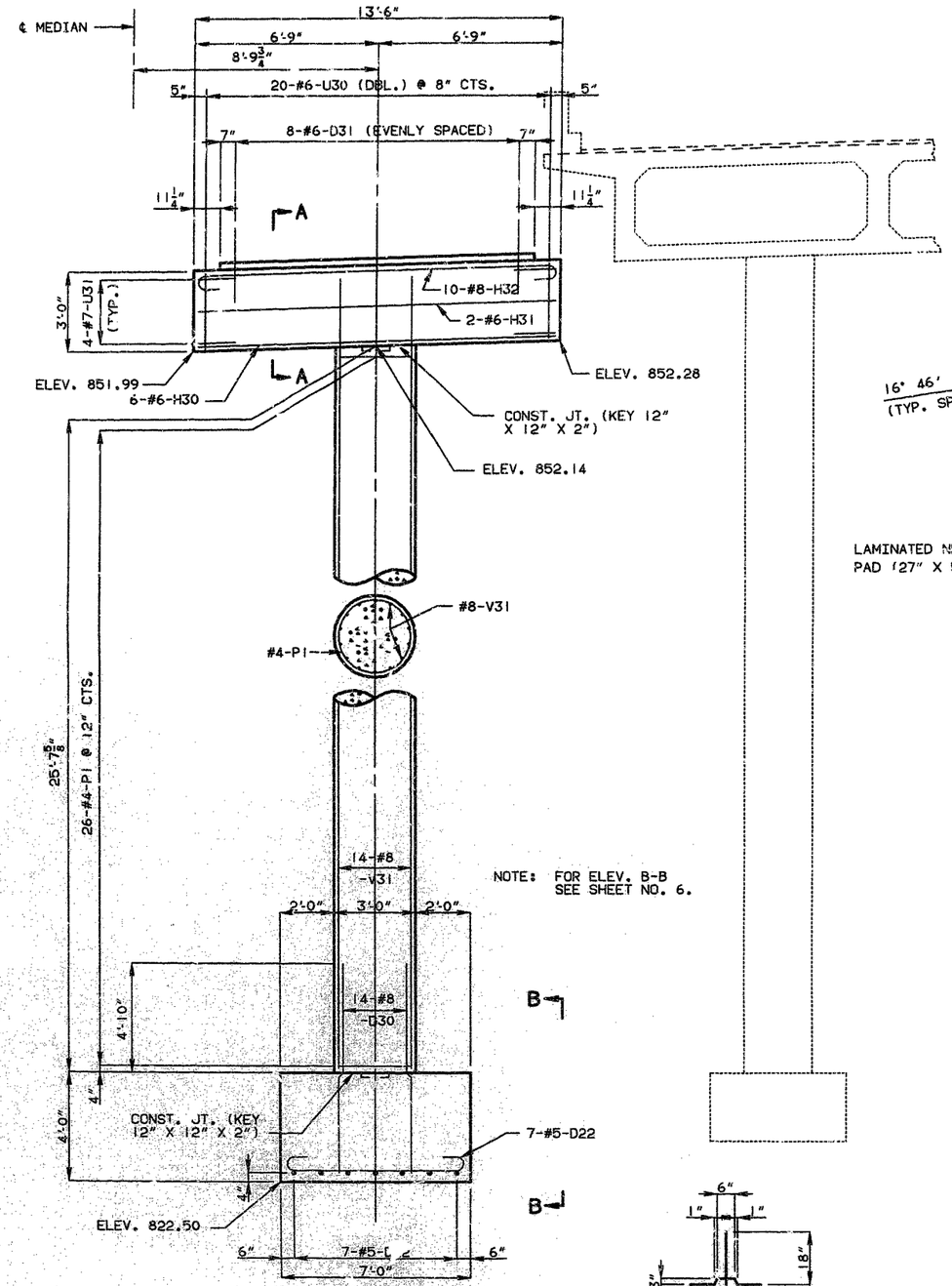


ELEVATION

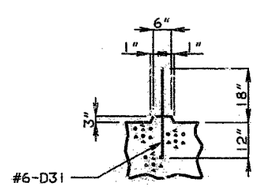


SECTION THRU KEY

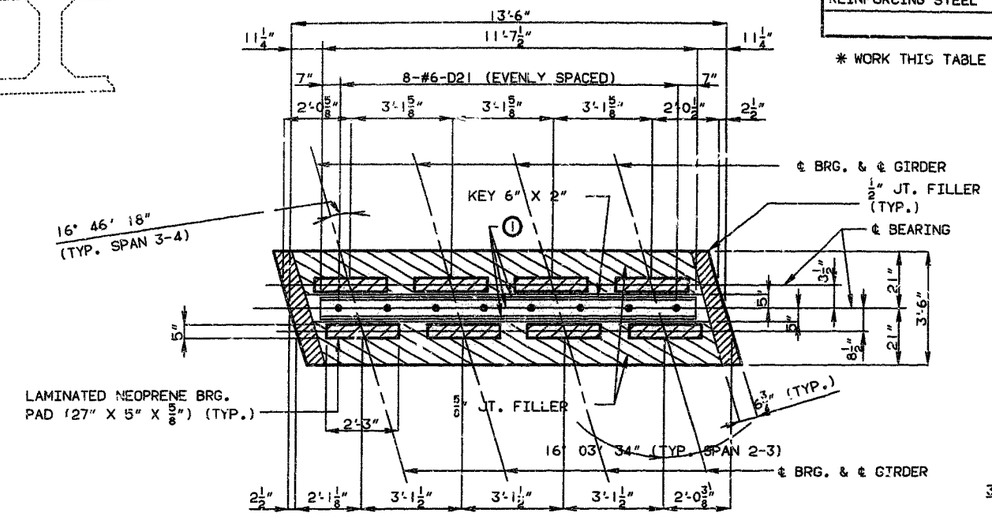


PLAN SHOWING BEARINGS

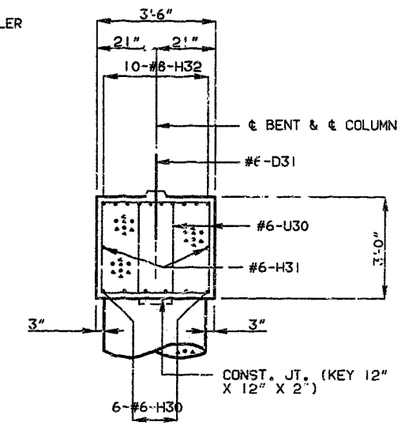


SECTION A-A

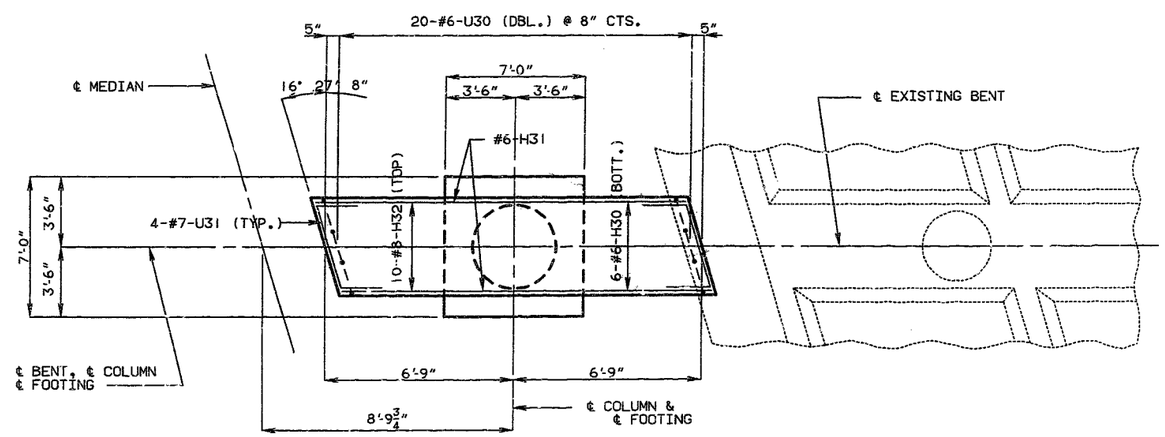


PLAN SHOWING REINFORCEMENT

INT. BT. 3 W.B.L.

DETAILED SEPT. 1991
CHECKED MAY 1992

NOTE: THIS DRAWING IS NOT TO SCALE. FOLLOW DIMENSIONS.



JACKSON COUNTY A-1240R1

SEE FINAL PLANS

54-16

| STATE | PROJ. NO. | SHEET NO. |
|---|---|---|
| MO. | | 22 |

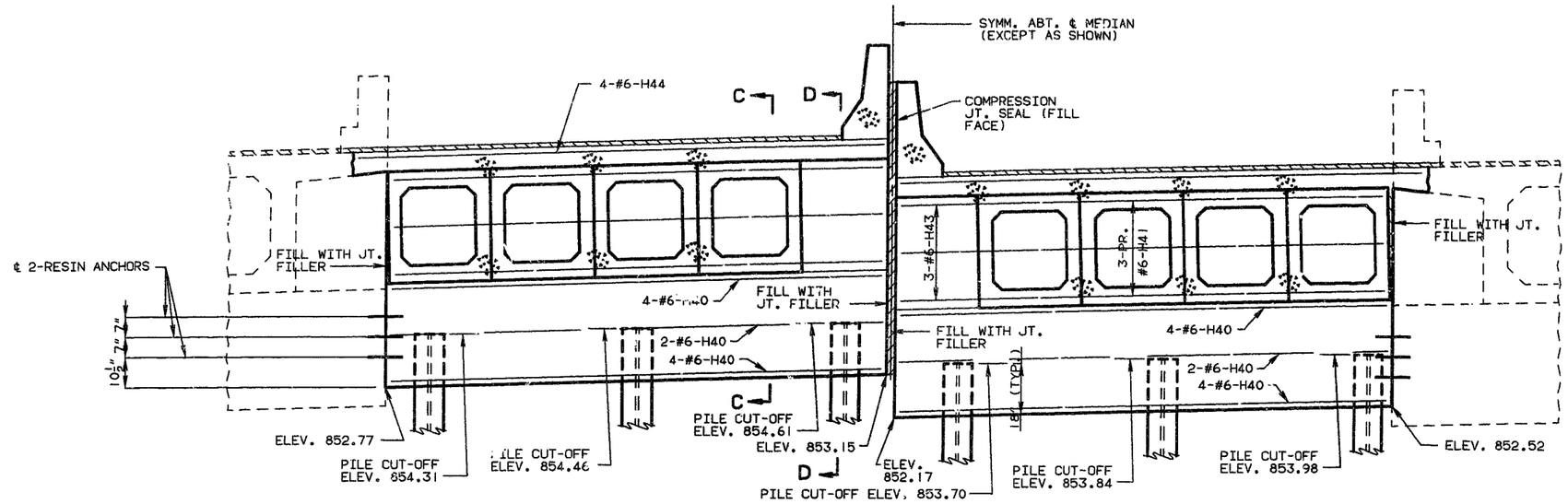


SECTION NEAR END BENT

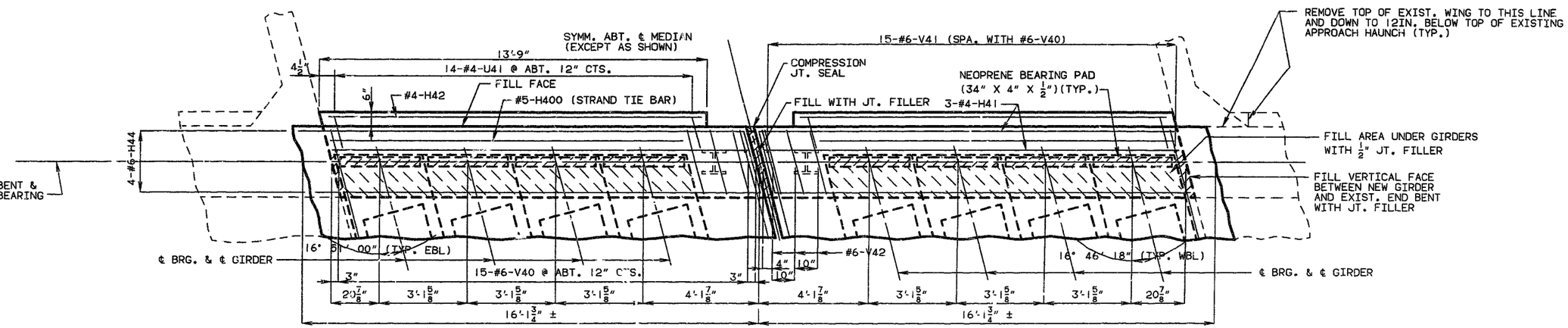


PLAN

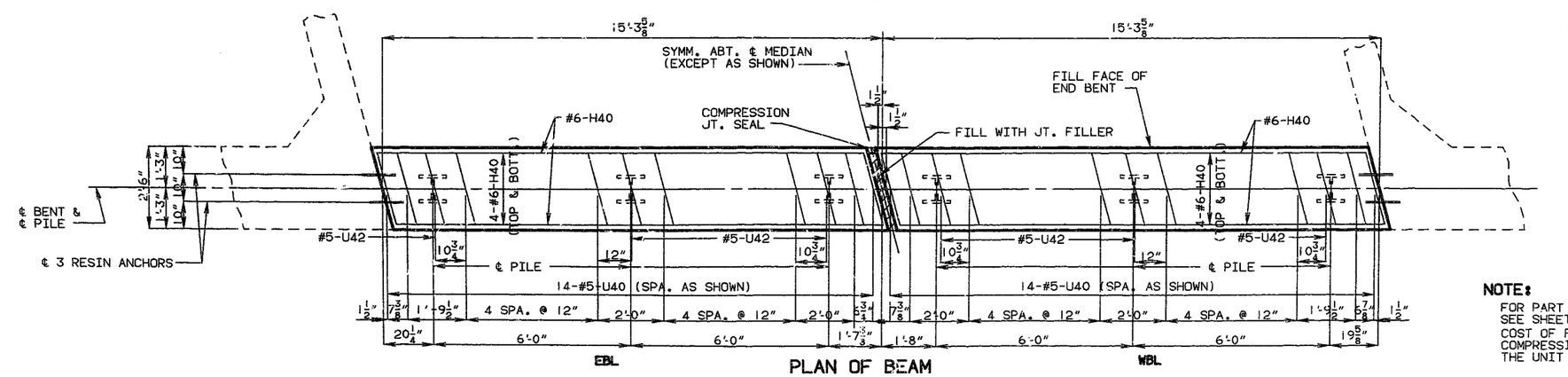


PLAN OF BEAM

**NOTE:**

PLACE ALL U-BARS AND V-BARS PARALLEL TO ℄ ROADWAY.

FOR SECTION C-C AND SECTION D-D SEE SHEET NO. 5.

ALL CONCRETE IN THE END BENT ABOVE TOP OF BEAM AND BELOW TOP OF SLAB SHALL BE CLASS B2.

STRANDS AT END OF GIRDER SHALL BE FIELD BENT OR, IF NECESSARY, CUT IN FIELD TO MAINTAIN 1-1/2" MINIMUM CLEARANCE TO FILL FACE OF END BENT.

FOR DETAIL OF STEEL PILE SPLICE, SEE SHEET NO. 2.

**NOTE:**

FOR PART CROSS SECTION THRU COMP. JOINT SEAL SEE SHEET NO. 5.
COST OF FURNISHING AND INSTALLING PREFORMED COMPRESSION JOINT SEAL SHALL BE INCLUDED IN THE UNIT PRICE BID FOR OTHER ITEMS.

DETAILED SEPT. 1991
CHECKED MAY 1992

NOTE: THIS DRAWING IS NOT TO SCALE. FOLLOW DIMENSIONS.

END BENT NO. 4

SHEET NO. 10 OF 35.

JACKSON COUNTY

A-1240R1

5617

| STATE | PROJ. NO. | SHEET NO. |
|---|---|---|
| MO. | | 23 |

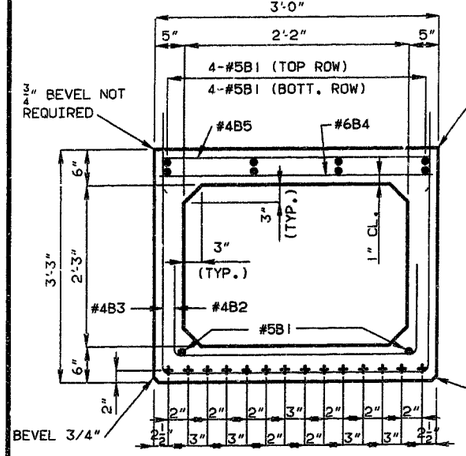


TYPICAL SECTION THRU BOX GIRDER

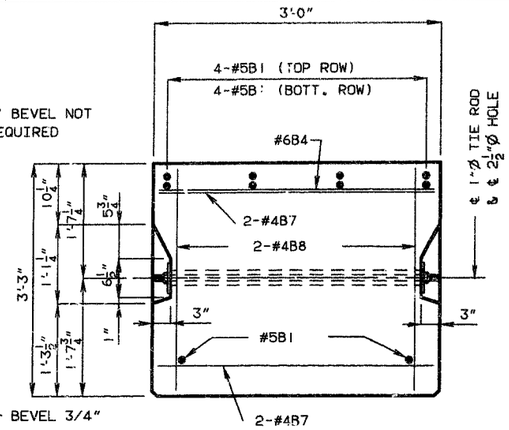


SECTION AT INT. DIAPH.

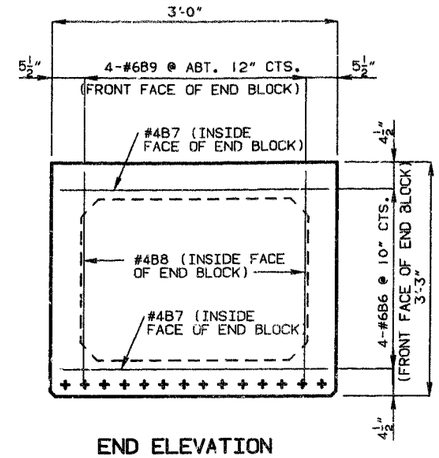


END ELEVATION

NOTE: CONCRETE FOR PRESTRESSED GIRDERS SHALL BE CLASS A1 WITH F'C = 5000 PSI

(+) INDICATES PRESTRESSING STRANDS.

USE 14 STRANDS WITH AN INITIAL PRESTRESS FORCE OF 434 KIPS.

PRESTRESSING STRANDS SHALL BE UNCOATED SEVEN WIRE LOW RELAXATION STRANDS, 1/2" DIAMETER CONFORMING TO A.A.S.H.T.O. M203, GRADE 270, SEE MO. STD. SPEC. 706.4.8.

MINIMUM CLEARANCE TO REINFORCING STEEL SHALL BE 1 1/2" UNLESS OTHERWISE NOTED.

FOR FIELD BENDING OF #4B3 SEE SHT. 15.

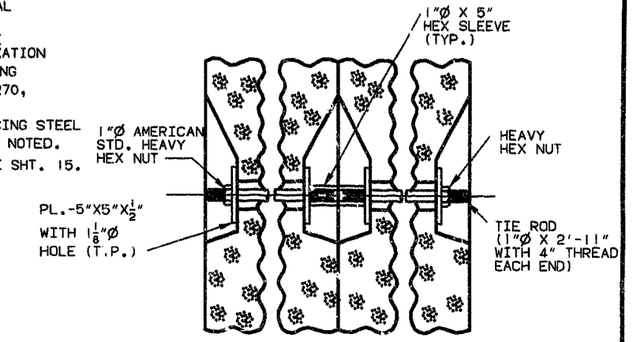


EXTERIOR GIRDER INTERIOR GIRDER

PART SECTION NEAR 1"Ø TIE ROD

NOTE: ADEQUATE LIFTING DEVICES SHALL BE PROVIDED AND SHOWN ON SHOP DRAWINGS.

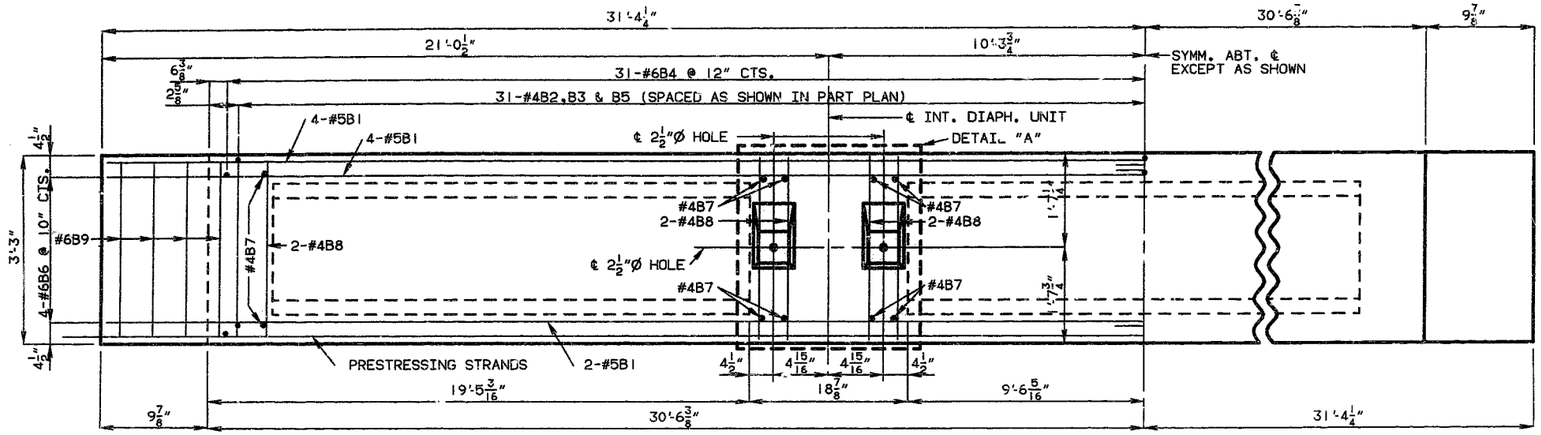


PART ELEVATION

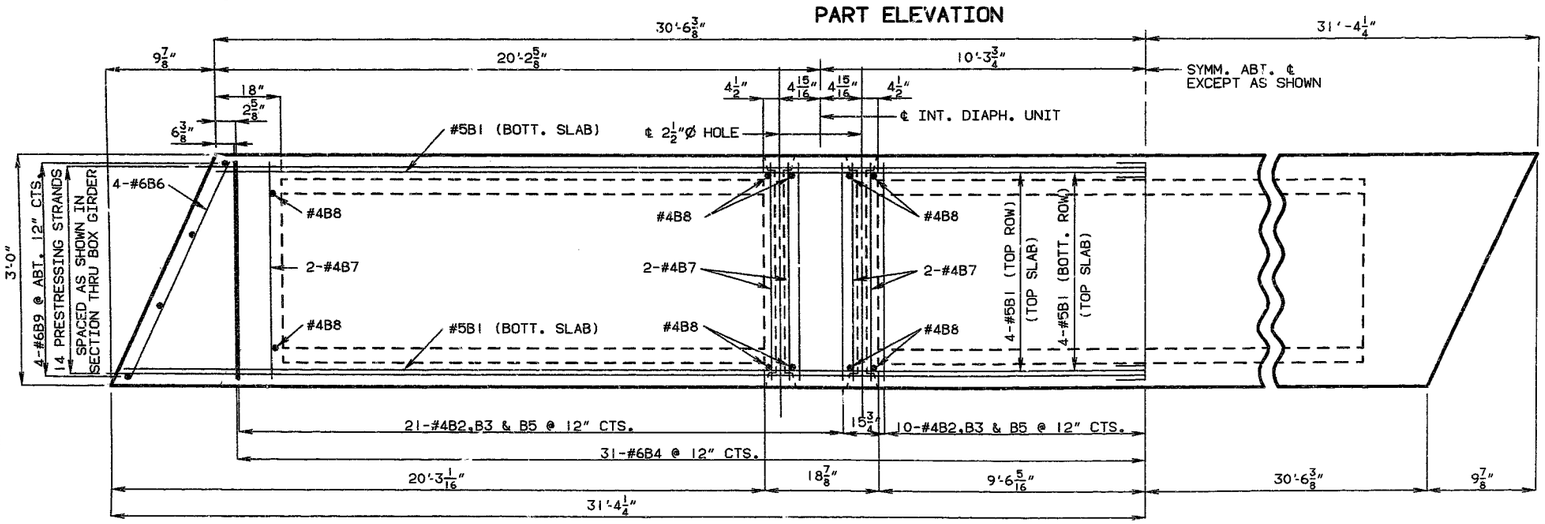


PART PLAN

NOTE: COST OF FURNISHING 1"Ø TIE ROD ASSEMBLIES IS INCLUDED IN PRICE BID FOR OTHER ITEMS.
1"Ø TIE RODS, SLEEVES, PLATES AND NUTS SHALL BE GALVANIZED.
1"Ø TIE RODS, SLEEVES AND NUTS SHALL BE A-307.
PLATES SHALL BE A-36.

FOR COMPLETE BILL OF REINFORCING STEEL SEE SHT. 14.

FOR STRAND DETAILS AT GIRDER ENDS, TYPICAL SECTION THRU BOX GIRDER & PART PLAN OF INT. DIAPH. SHOWING TIE ROD LOCATION SEE SHT. 15.

FOR LOCATION OF COIL TIE INSERTS FOR SLAB DRAINS, (EXTERIOR GIRDER, W.B. ONLY), SEE SHEET NO. 20.
FOR DETAILS OF WEEP HOLES SEE SHEET NO. 15.

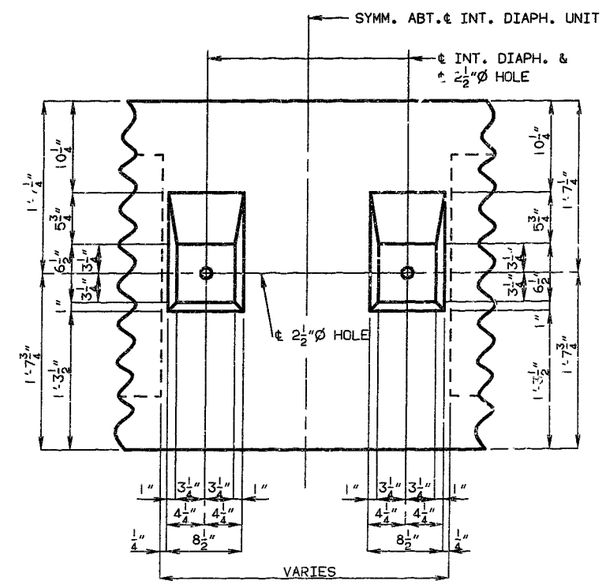


PART ELEVATION OF INT. DIAPH. UNITS (DETAIL "A")

# DETAILS OF BOX GIRDER SPAN (1-2)

JACKSON COUNTY A-1240R1

DETAILED SEPT. 1991
CHECKED MAY 1992

NOTE: THIS DRAWING IS NOT TO SCALE. FOLLOW DIMENSIONS.



56 18

| STATE | PROJ. NO. | SHEET NO. |
|---|---|---|
| MO. | | |

NOTE: CONCRETE FOR PRESTRESSED GIRDERS SHALL BE CLASS A1 WITH F'C = 5000 PSI

(+) INDICATES PRESTRESSING STRANDS.

USE 28 STRANDS WITH AN INITIAL PRESTRESS FORCE OF 868 KIPS.

PRESTRESSING STRANDS SHALL BE UNCOATED SEVEN WIRE LOW RELAXATION STRANDS, $\frac{1}{2}$" DIAMETER CONFORMING TO A.A.S.H.T.O. M203, GRADE 270 SEE MO. STD. SPEC. 705.4.8.

MINIMUM CLEARANCE TO REINFORCING STEEL SHALL BE $1\frac{1}{2}$" UNLESS OTHERWISE NOTED.

FOR PART SECTION NEAR 1"Ø TIE RODS SEE SHT. 11.

FOR COMPLETE BILL OF REINFORCING STEEL SEE SHT. 14.

FOR STRAND DETAILS AT GIRDER ENDS, TYPICAL SECTION THRU BOX GIRDER & PART PLAN OF INT. DIAPH. SHOWING TIE ROD LOCATION, SEE SHT. 15.

FOR FIELD BENDING OF #4B3 SEE SHT. 15.
FOR DETAIL "A" SEE SHT. 11.

ADEQUATE LIFTING LOOPS SHALL BE PROVIDED AND SHOWN ON SHOP DRAWINGS.

FOR DETAILS OF WEEP HOLES SEE SHEET NO. 15.

A 3-INCH WIDE STRIP AT EACH END AND 1/10TH POINTS ACROSS THE TOP FLANGE OF THE MEMBER SHALL BE SMOOTH FINISHED TO ACCURATE TOP FLANGE DEPTH.

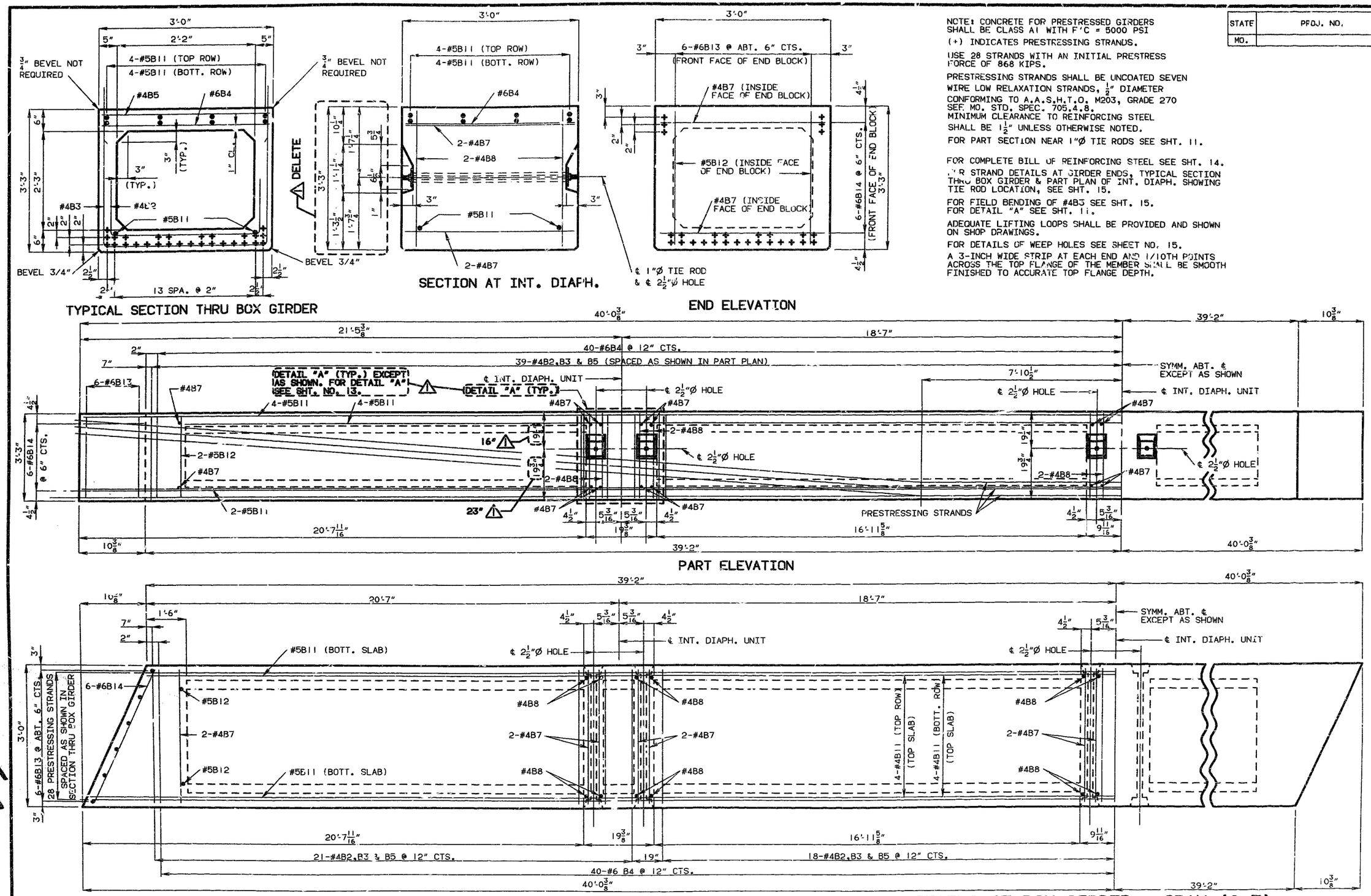


DETAILED SEPT. 1991
CHECKED MAY 1992

NOTE: THIS DRAWING IS NOT TO SCALE. FOLLOW DIMENSIONS.

# DETAILS OF BOX GIRDER - SPAN (2-3)

SHEET NO. 12 OF 35.

⚠ REVISED 5/14/93

JACKSON COUNTY

A-1240R1

19

GROUP= 50 SUBGRP=856 SCALE= 1.0000 DRAWID=A1240R1012IC
DATE= 3/14/93 TIME=10:22 ACCESS=NONE
LEVEL= 1 DRAWING=
PLOT= 2

| STATE | PROJ. NO. | SHEET NO. |
|---|---|---|
| MO. | | |

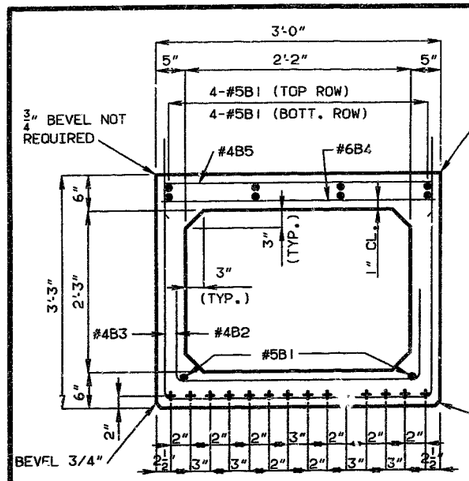


TYPICAL SECTION THRU BOX GIRDER

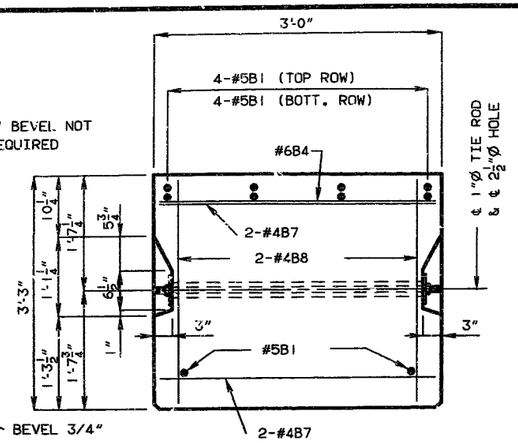


SECTION AT INT. DIAPH.

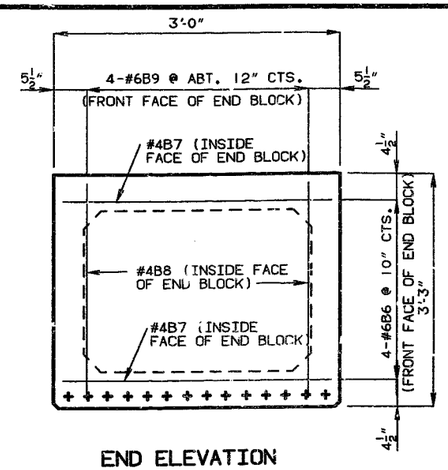


END ELEVATION

NOTE: CONCRETE FOR PRESTRESSED GIRDERS SHALL BE CLASS A1 WITH F'C = 5000 PSI

(+) INDICATES PRESTRESSING STRANDS.

USE '4 STRANDS WITH AN INITIAL PRESTRESS FORCE OF 434 KIPS.

PRESTRESSING STRANDS SHALL BE UNCOATED SEVEN WIRE LOW RELAXATION STRANDS, ½" DIAMETER CONFORMING TO A.A.S.H.T.O. M203, GRADE 270, SEE MO. STD. SPEC. 705.4.8.

MINIMUM CLEARANCE TO REINFORCING STEEL SHALL BE 1½" UNLESS OTHERWISE NOTED.

FOR FIELD BENDING OF #4B3 SEE SHT. NO. 15.

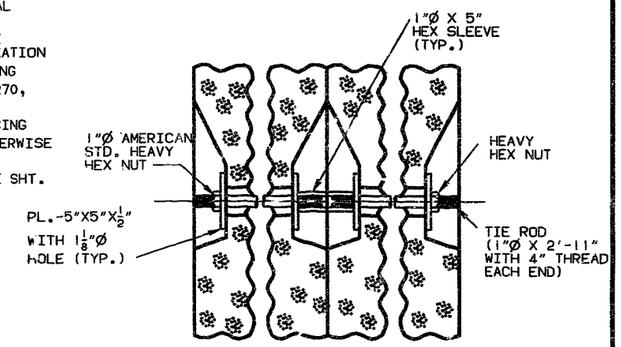


EXTERIOR GIRDER INTERIOR GIRDER

PART SECTION NEAR 1"Ø TIE ROD

NOTE: ADEQUATE LIFTING DEVICES SHALL BE PROVIDED AND SHOWN ON SHOP DRAWINGS.

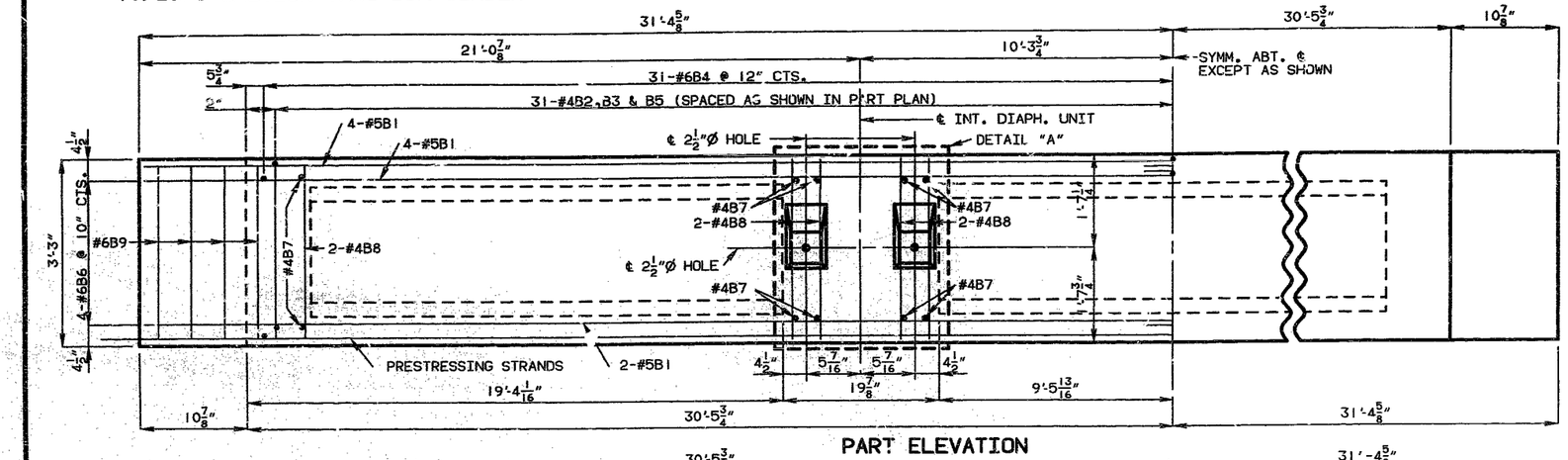


PART ELEVATION

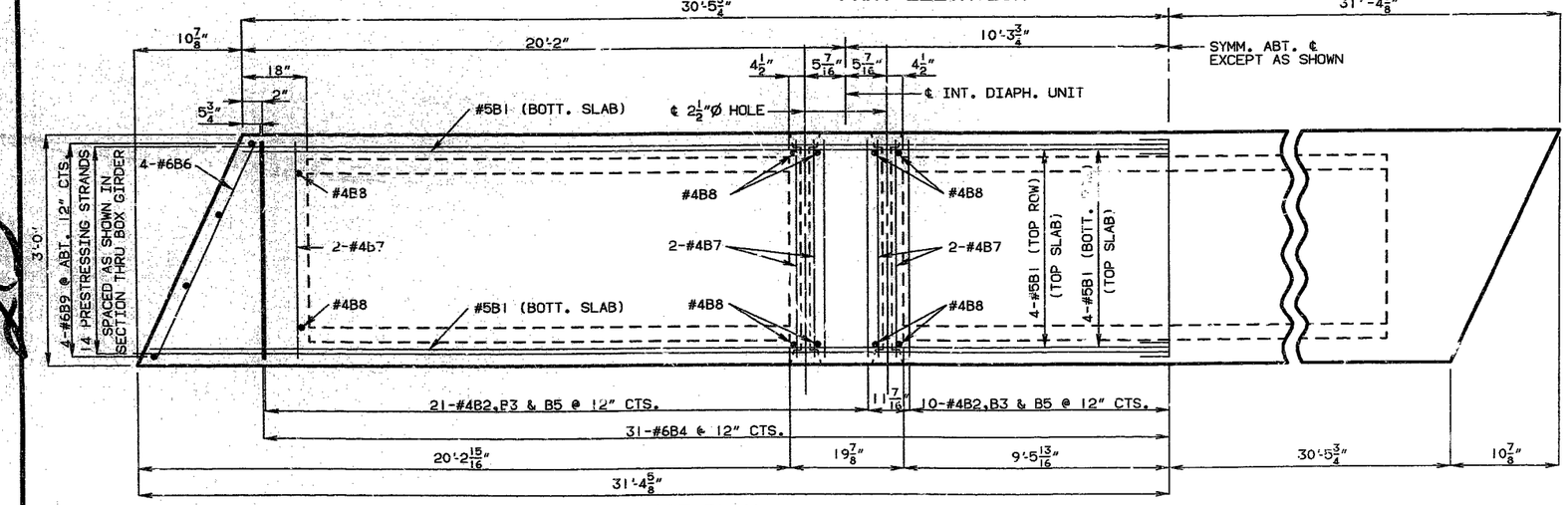


PART PLAN

NOTE: COST OF FURNISHING 1"Ø TIE ROD ASSEMBLIES IS INCLUDED IN PRICE BID FOR OTHER ITEMS.
1"Ø TIE RODS, SLEEVES, PLATES AND NUTS SHALL BE GALVANIZED.
1"Ø TIE RODS, SLEEVES AND NUTS SHALL BE A-307.
PLATES SHALL BE A-36.

FOR COMPLETE BILL OF REINFORCING STEEL SEE SHT. 14.

FOR STRAND DETAILS AT GIRDER ENDS, TYPICAL SECTION THRU BOX GIRDER & PART PLAN OF INT. DIAPH. SHOWING TIE ROD LOCATION SEE SHT. 15.

FOR DETAILS OF WEEP HOLES SEE SHEET NO. 15.

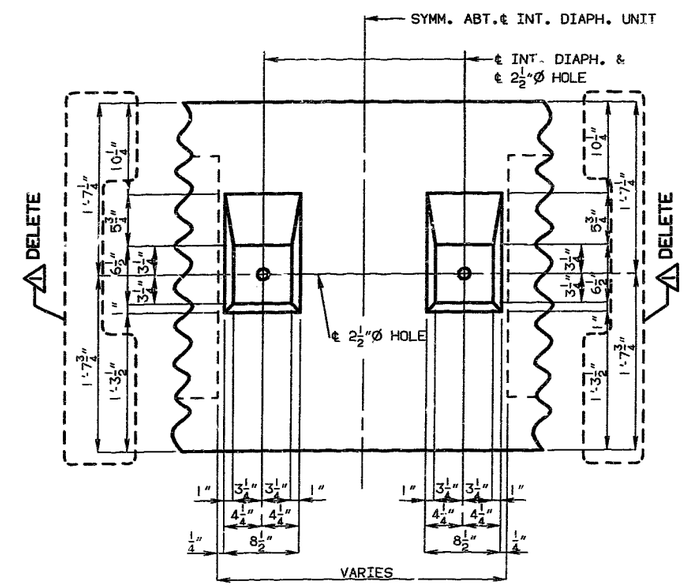


PART ELEVATION OF INT. DIAPH. UNITS (DETAIL "A")

# DETAILS OF BOX GIRDER SPAN (4-3)

DETAILED SEPT. 1991
CHECKED MAY 1992

NOTE: THIS DRAWING IS NOT TO SCALE. FOLLOW DIMENSIONS.

SHEET NO. 13 OF 35.

REVISED 5/14/93

JACKSON COUNTY A-1240R1

30

GROUP=B50 SUBGRP=B56 SCALE= 1.0000 DRAWID-J4120507 A1240R1013C
DATE= 5/14/93 TIME=10 ACCESS=NONE
USER= (DOROSS) LOCK=
PLOT= 1

| STATE | PROJ. NO. | SHEET NO. |
|---|---|---|
| MO. | | 26 |

## COMPLETE BILL OF REINFORCING STEEL - EACH BOX GIRDER

| NO. REQ'D. | MARK NO. SIZE | MARK NO. MARK | LOCATION | GRADE 60 (H) | SHAPE NO. | STIRRUP (S) | SUBSTR. (X) | VARIES (V) | NO. EACH | DIMENSIONS B FT. | B IN. | C FT. | C IN. | D FT. | D IN. | E FT. | E IN. | F FT. | F IN. | H FT. | H IN. | K FT. | K IN. | NOMINAL LENGTH FT. | NOMINAL LENGTH IN. | ACTUAL LENGTH FT. | ACTUAL LENGTH IN. | WEIGHT LBS. |
|---|---|---|---|---|---|---|---|---|---|---|---|---|---|---|---|---|---|---|---|---|---|---|---|---|---|---|---|---|
| 20 | 5 | B1 | GIRDER | H | 20 | | | | | 31 | 8 | | | | | | | | | | | | | 31 | 8 | 31 | 8 | 661 |
| 61 | 4 | B2 | GIRDER | H | 10 | S | | | | | | | 22 | 2 | 6 | | | | | | | | | 6 | 2 | 6 | 0 | 244 |
| 61 | 4 | B3 | GIRDER | H | 10 | S | | | | | | 4 | 1.5 | 2 | 9 | | | | | | | | | 11 | 0 | 10 | 10 | 441 |
| 61 | 6 | B4 | GIRDER | H | 20 | | | | | 2 | 9 | | | | | | | | | | | | | 2 | 9 | 2 | 9 | 252 |
| 61 | 4 | B5 | GIRDER | H | 10 | S | | | | | | | 20 | 2 | 9 | | | | | | | | | 6 | 1 | 5 | 11 | 241 |
| 8 | 6 | B6 | GIRDER | H | 20 | | | | | 2 | 10 | | | | | | | | | | | | | 2 | 10 | 2 | 10 | 34 |
| 20 | 4 | B7 | GIRDER | H | 20 | | | | | 2 | 9 | | | | | | | | | | | | | 2 | 9 | 2 | 9 | 37 |
| 20 | 4 | B8 | GIRDER | H | 20 | | | | | 3 | 0 | | | | | | | | | | | | | 3 | 0 | 3 | 0 | 40 |
| 8 | 6 | B9 | GIRDER | H | 20 | | | | | 3 | 0 | | | | | | | | | | | | | 3 | 0 | 3 | 0 | 36 |

SPAN (1-2) & (3-4)

## COMPLETE BILL OF REINFORCING STEEL - EACH BOX GIRDER

| NO. REQ'D. | MARK NO. SIZE | MARK NO. MARK | LOCATION | GRADE 60 (H) | SHAPE NO. | STIRRUP (S) | SUBSTR. (X) | VARIES (V) | NO. EACH | DIMENSIONS B FT. | B IN. | C FT. | C IN. | D FT. | D IN. | E FT. | E IN. | F FT. | F IN. | H FT. | H IN. | K FT. | K IN. | NOMINAL LENGTH FT. | NOMINAL LENGTH IN. | ACTUAL LENGTH FT. | ACTUAL LENGTH IN. | WEIGHT LBS. |
|---|---|---|---|---|---|---|---|---|---|---|---|---|---|---|---|---|---|---|---|---|---|---|---|---|---|---|---|---|
| 77 | 4 | B2 | GIRDER | H | 10 | S | | | | | | | 22 | 2 | 6 | | | | | | | | | 6 | 2 | 6 | 0 | 309 |
| 77 | 4 | B3 | GIRDER | H | 10 | S | | | | | | 4 | 1.5 | 2 | 9 | | | | | | | | | 11 | 0 | 10 | 10 | 557 |
| 79 | 6 | B4 | GIRDER | H | 20 | | | | | 2 | 9 | | | | | | | | | | | | | 2 | 9 | 2 | 9 | 326 |
| 77 | 4 | B5 | GIRDER | H | 10 | S | | | | | | | 20 | 2 | 9 | | | | | | | | | 6 | 1 | 5 | 11 | 304 |
| 28 | 4 | B7 | GIRDER | H | 20 | | | | | 2 | 9 | | | | | | | | | | | | | 2 | 9 | 2 | 9 | 52 |
| 24 | 4 | B8 | GIRDER | H | 20 | | | | | 3 | 0 | | | | | | | | | | | | | 3 | 0 | 3 | 0 | 48 |
| 20 | 5 | B11 | GIRDER | H | 20 | | | | | 40 | 4 | | | | | | | | | | | | | 40 | 4 | 40 | 4 | 841 |
| 4 | 5 | B12 | GIRDER | H | 20 | | | | | 3 | 0 | | | | | | | | | | | | | 3 | 0 | 3 | 0 | 13 |
| 12 | 6 | B13 | GIRDER | H | 20 | | | | | 3 | 0 | | | | | | | | | | | | | 3 | 0 | 3 | 0 | 54 |
| 12 | 6 | B14 | GIRDER | H | 20 | | | | | 2 | 10 | | | | | | | | | | | | | 2 | 10 | 2 | 10 | 51 |

SPAN (2-3)

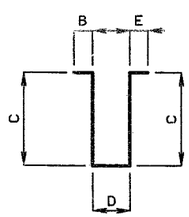


SHAPE 10

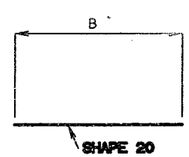


SHAPE 20

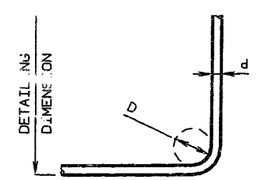


#4 : D = 2"
#5 : D = $2\frac{1}{2}$"

90° STIRRUP BEND

NOTE: ALL REINFORCEMENT SHALL BE GRADE 60. FY=60,000 PSI.

ALL STANDARD HOOKS AND BENDS OTHER THAN 180 DEG. TO BE BENT WITH SAME PROCEDURE AS FOR 90 DEG. STANDARD HOOK.

HOOKS AND BENDS SHALL BE IN ACCORDANCE WITH THE PROCEDURES AS SHOWN ON THIS SHEET.

NOMINAL LENGTHS ARE BASED ON OUT TO OUT DIMENSIONS SHOWN IN BENDING DIAGRAMS AND ARE LISTED FOR FABRICATORS USE. NEAREST INCH.

S = STIRRUP

ACTUAL LENGTHS ARE MEASURED ALONG CENTERLINE BAR TO THE NEAREST INCH.

WEIGHTS ARE BASED ON ACTUAL LENGTHS.

DETAILED SEPT. 1991
CHECKED: 3 MAY, 1992

NOTE: THIS DRAWING IS NOT TO SCALE. FOLLOW DIMENSIONS.



JACKSON COUNTY

A-1240R1

57 31

| STATE | PROJ. NO. | SHEET NO. |
|---|---|---|
| MO. | | 27 |

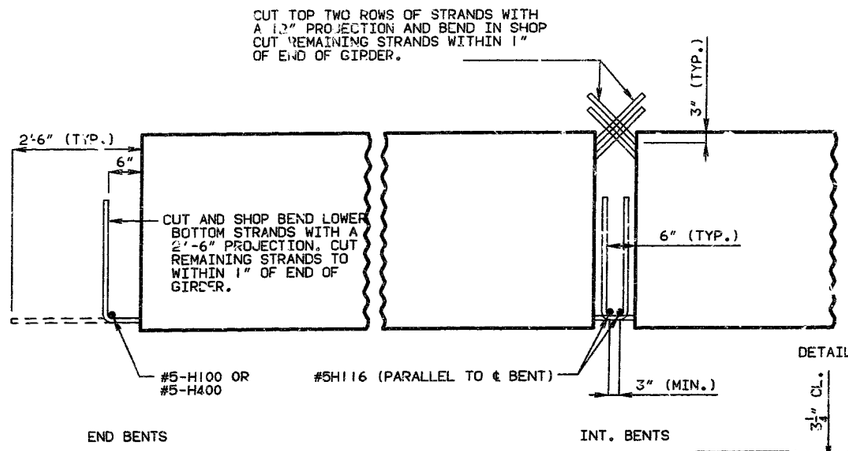


STRAND DETAILS AT GIRDER ENDS

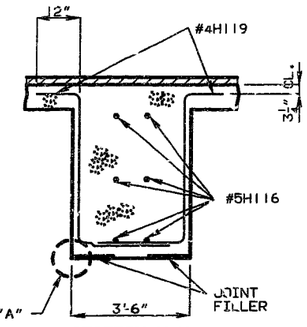


SECTION H-H

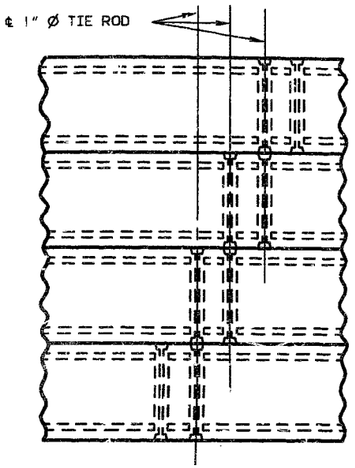


PART PLAN OF INT. DIAPH. SHOWING TIE ROD LOCATION

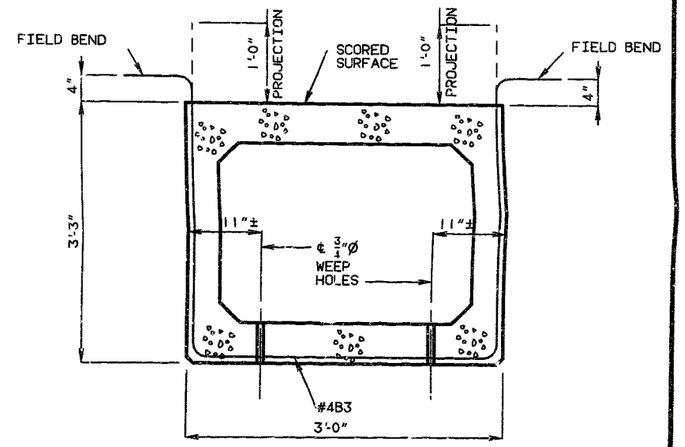


TYPICAL SECTION THRU BOX GIRDER

NOTE: TWO ¾"Ø WEEP HOLES SHALL BE PROVIDED AT LOWER END OF EACH VOID. THEY SHALL EXTEND THRU FORMS AND BE KEPT OPEN AT ALL TIMES. ¾"Ø WEEP HOLES TO BE CENTERED BETWEEN PRESTRESSED STRANDS. DRILLING WILL NOT BE ALLOWED.

DIAPHRAGMS AT INTERMEDIATE BENTS SHALL BE VERTICAL.

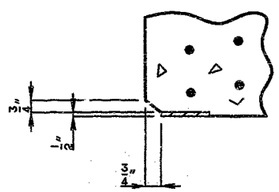


DETAIL "A"

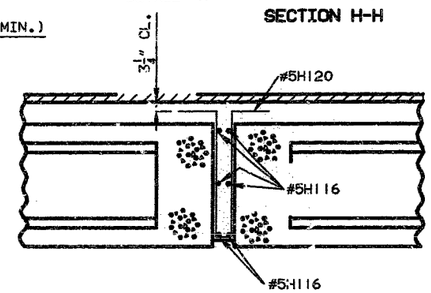


SECTION B-B

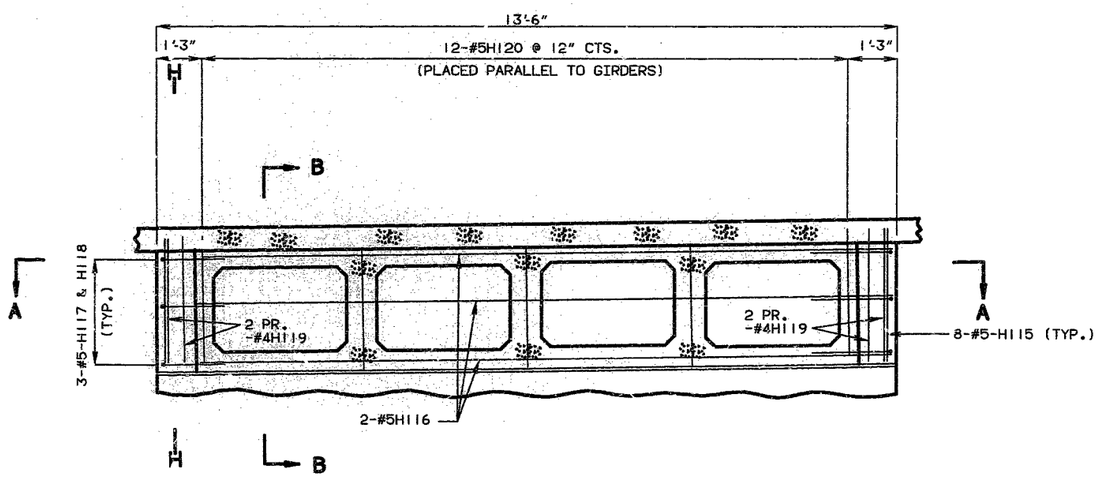


SECTION THRU DIAPH. AT INT. BENTS

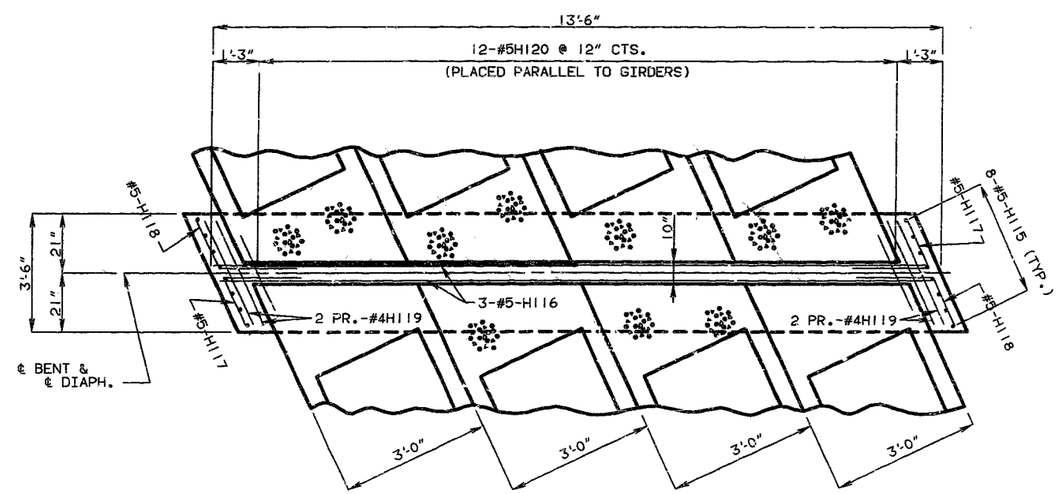


SECTION A-A

DETAILED SEPT. 1991
CHECKED MAY 1992

NOTE: THIS DRAWING IS NOT TO SCALE ... ONS.

SHEET NO. 15 OF 35.

JACKSON COUNTY

A-1240R1

| STATE | PROJ. NO. | SHEET NO. |
|---|---|---|
| MD. | | 28 |

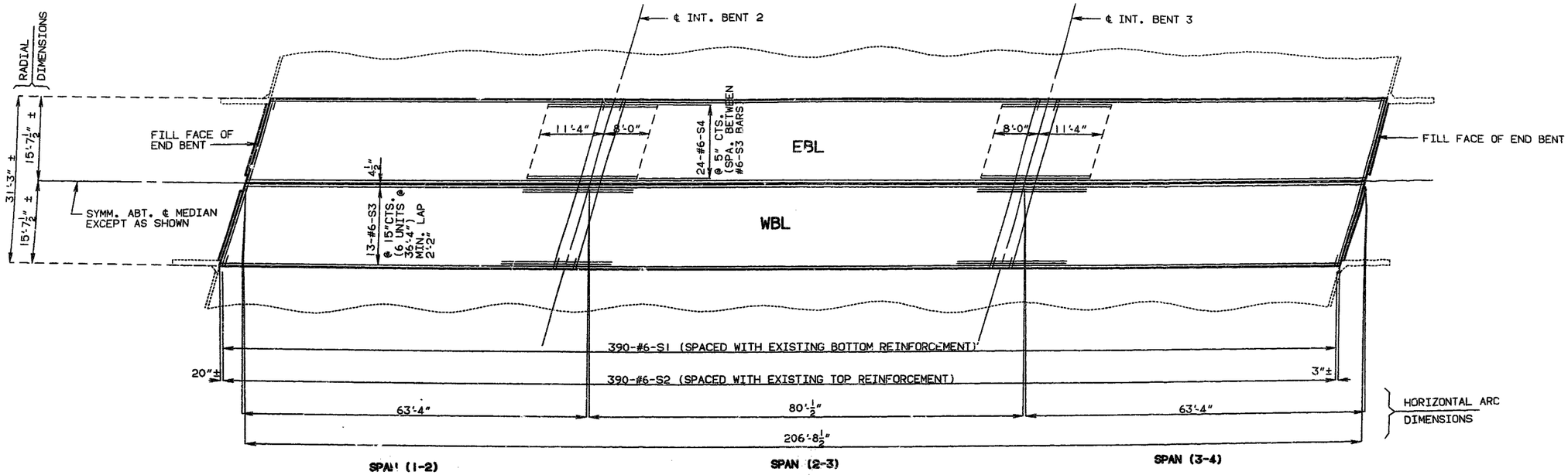


PART PLAN OF SLAB SHOWING REINFORCEMENT

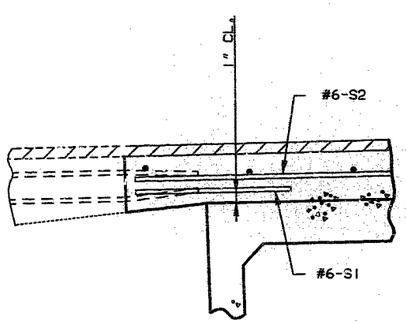


DETAIL "A"

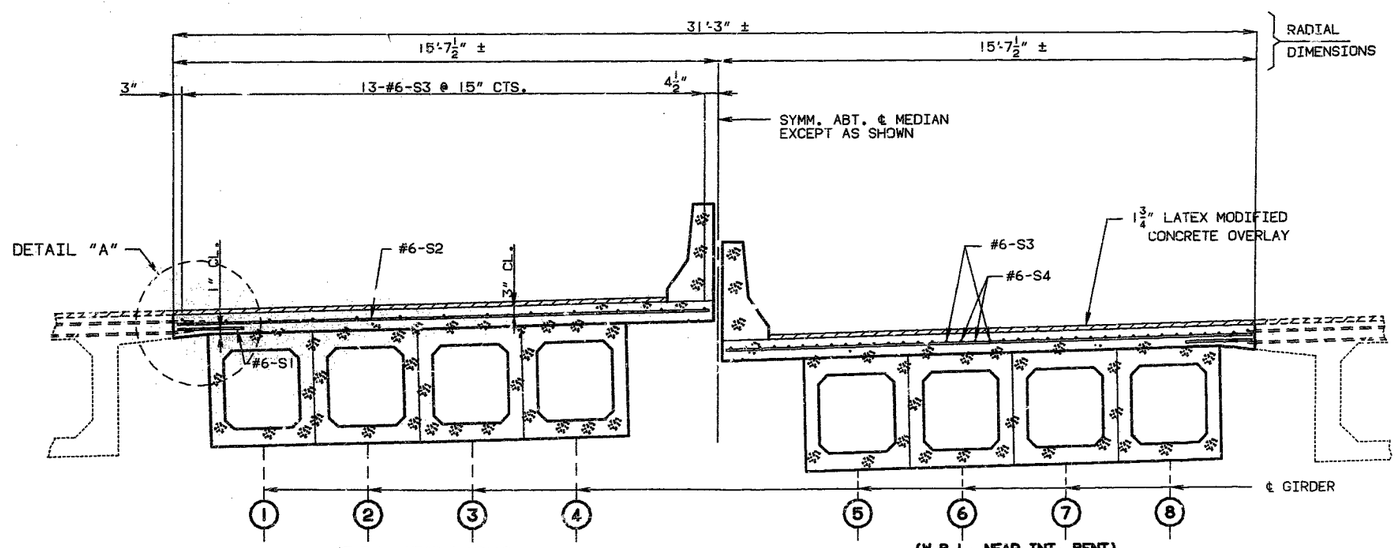


TYPICAL PART SECTION THRU SLAB

DETAILED SEPT. 1991
CHECKED MAY 1992

NOTE: THIS DRAWING IS NOT TO SCALE. FOLLOW DIMENSIONS.

SHEET NO. 16 OF 35.

JACKSON COUNTY

A-1240R1

23

| STATE | PROJ. NO. | SHEET NO. |
|---|---|---|
| MO. | | 29 |

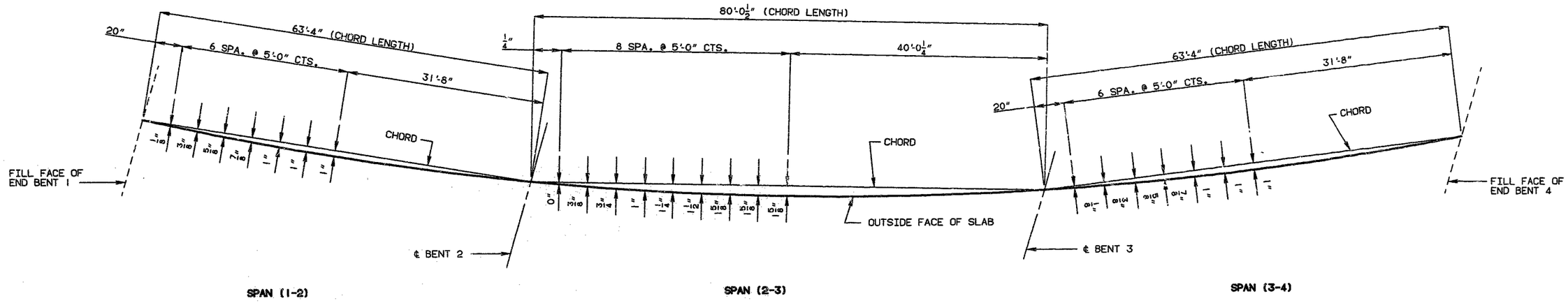


PART PLAN OF SLAB SHOWING CURVE OFFSETS
(NEAR ℄ MEDIAN E.B.L. AND W.B.L.)

CURVE OFFSETS

DETAILED SEPT. 1991
CHECKED MAY 1992

NOTE: THIS DRAWING IS NOT TO SCALE. FOLLOW DIMENSIONS.



JACKSON COUNTY A-1240R1

62-29

| STATE | PROJ. NO. | SHEET NO. |
|---|---|---|
| MO. | | 30 |

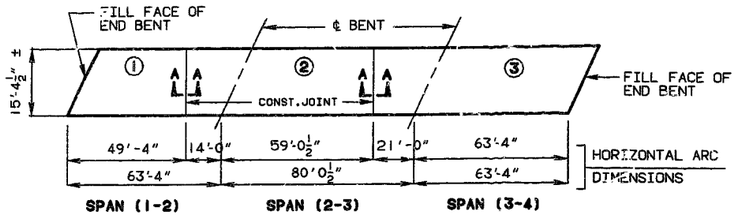


E.B.L. SHOWN (W.B.L. SIMILAR)

| | SEQUENCE OF POURS | | | MINIMUM RATE OF POUR (CUBIC YARDS PER HOUR) |
|---|---|---|---|---|
| | DIRECTION | | | WITH RETARDER |
| BASIC SEQUENCE | 1 | 2 | 3 | 25 |
| | END TO 2 | 1 TO 3 | 2 TO END | |
| ALTERNATE POURS TO THE BASIC SEQUENCE ARE SUBJECT TO THE APPROVAL OF THE ENGINEER IN ACCORDANCE WITH SECTION 703.3.12.4 OF MISSOURI STANDARD SPECIFICATIONS. | | | | |
| ALTERNATE "A" POURS | 1 + 2 | 3 | | 25 |
| | END TO 3 | 2 TO END | | |
| ALTERNATE "B" POURS | 1 + 2 + 3 | | | 25 |
| | END TO END | | | |

## SLAB POURING SEQUENCE

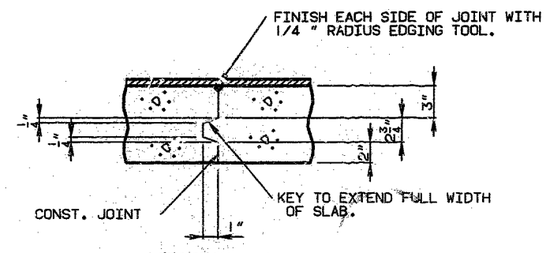


SECTION A-A

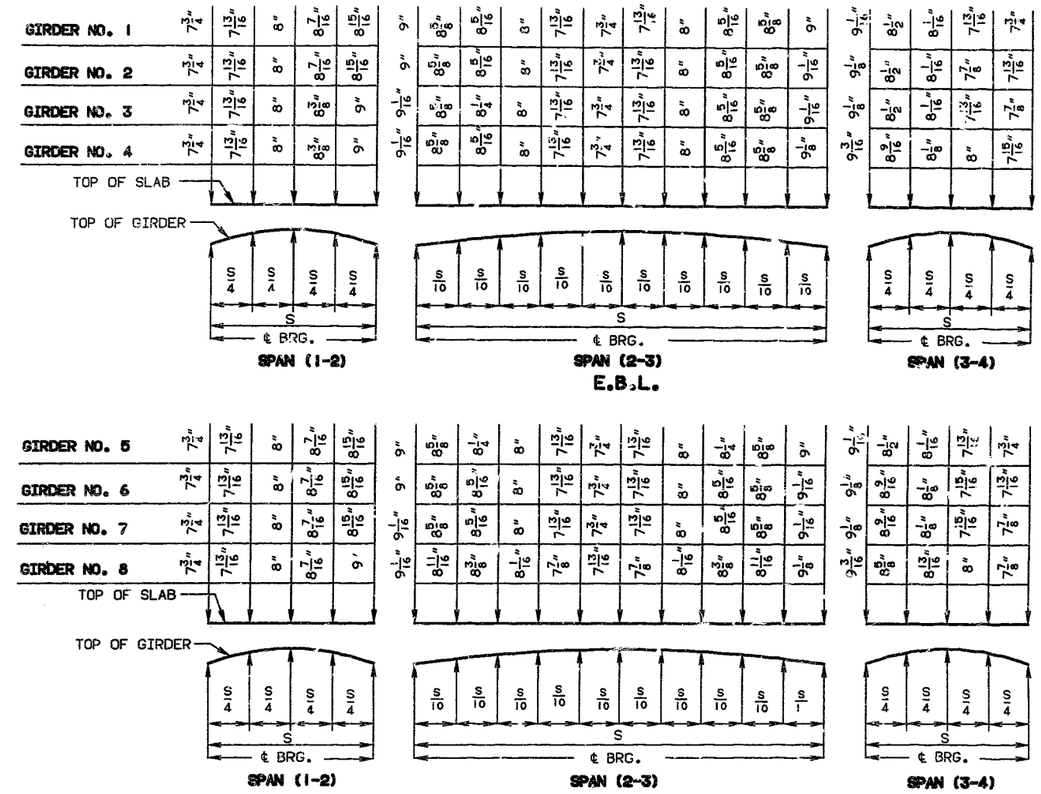


## THEORETICAL SLAB THICKNESS DIAGRAM

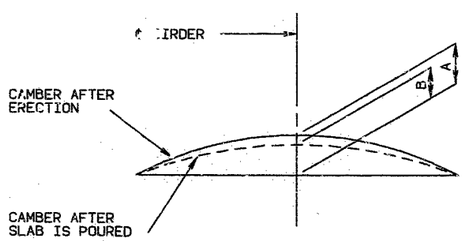


CONVERSION FACTORS FOR GIRDER CAMBER
0.25 PT. = 0.7125 X 0.5 PT.
0.10 PT. = 0.3140 X 0.5 PT.
0.20 PT. = 0.5930 X 0.5 PT.
0.30 PT. = 0.8130 X 0.5 PT.
0.40 PT. = 0.9520 X 0.5 PT.

| TABLE OF DIMENSIONS | | |
|---|---|---|
| SPAN | A | B |
| (1-2) | $\frac{13}{16}$" | $\frac{1}{2}$" |
| (2-3) | $2\frac{3}{8}$" | $1\frac{1}{2}$" |
| (3-4) | $\frac{13}{16}$" | $\frac{1}{2}$" |

## GIRDER CAMBER DIAGRAM

NOTE:

SLAB TO BE BUILT PARALLEL TO GRADE AND TO A MINIMUM THICKNESS OF $7\frac{3}{4}$".

IF GIRDER CAMBER IS DIFFERENT FROM THAT SHOWN IN THE CAMBER DIAGRAM, IT SHALL BE NECESSARY TO INCREASE THE SLAB THICKNESS OR TO RAISE THE GRADE UNIFORMLY THROUGHOUT THE STRUCTURE. NO PAYMENT WILL BE MADE FOR ADDITIONAL LABOR OR MATERIALS REQUIRED FOR VARIATION IN SLAB THICKNESS OR GRADE ADJUSTMENT.

CONCRETE IN SLAB IS INCLUDED IN THE ESTIMATED QUANTITIES AS CLASS B2 CONCRETE.

THE DIAPHRAGM AT THE INTERMEDIATE AND END BENTS SHALL BE POURED A MINIMUM OF 30 MINUTES AND A MAXIMUM OF 2 HOURS BEFORE THE SLAB IS POURED.

THE CONTRACTOR SHALL FURNISH AN APPROVED RETARDER TO RETARD THE SET OF THE CONCRETE TO 2.5 HOURS AND SHALL POUR AND SATISFACTORILY FINISH THE SLAB POURS AT NOT LESS THAN 25 CUBIC YARDS PER HOUR.

DETAILED SEPT. 1991
CHECKED MAY 1992

NOTE: THIS DRAWING IS NOT TO SCALE. FOLLOW DIMENSIONS.



JACKSON COUNTY A-1240R1

635

| STATE | PROJ. NO. | SHEET NO. |
|---|---|---|
| MO. | | 31 |

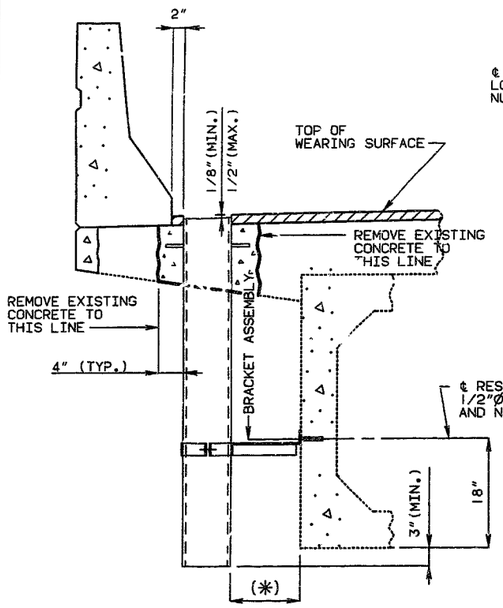


PART ELEVATION OF SLAB AT DRAIN

(*) IF DIMENSION IS LESS THAN 1", DRAINS SHALL BE PLACED PARALLEL TO ROADWAY, OTHERWIS PLACE DRAINS TRANSVERSE TO ROADWAY.

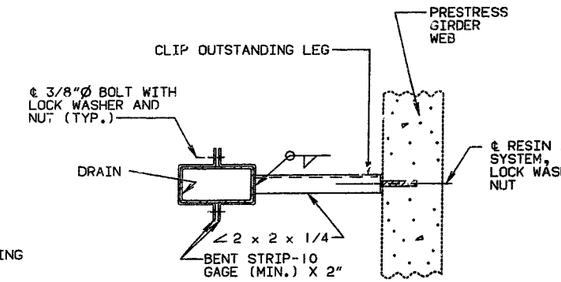


PART SECTION SHOWING BRACKET ASSEMBLY

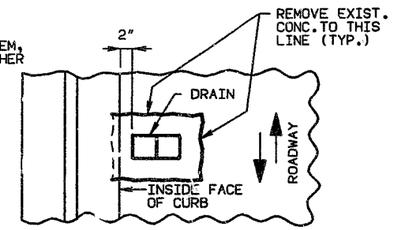


PART PLAN OF SLAB AT DRAIN

DETAILS OF DRAINS TRANSVERSE TO ROADWAY

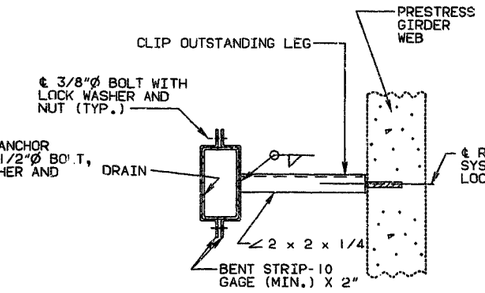


PART SECTION SHOWING BRACKET ASSEMBLY

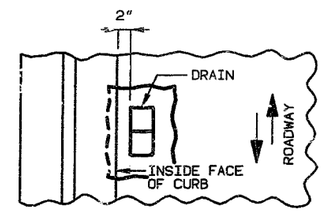


PART PLAN OF SLAB AT DRAIN

DETAILS OF DRAINS PARALLEL TO ROADWAY

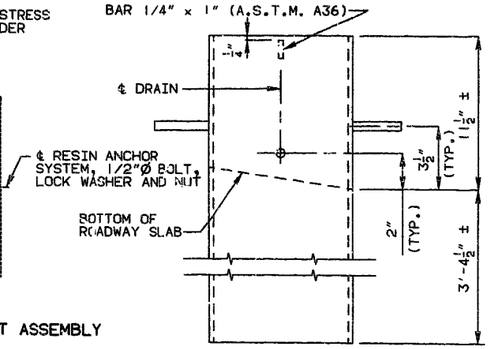


ELEVATION OF DRAIN

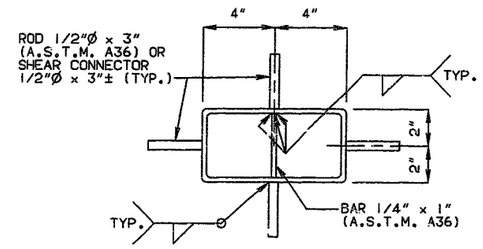


PLAN OF DRAIN

## GENERAL NOTES:

SLAB DRAINS MAY BE FABRICATED OF EITHER 1/4" WELDED SHEETS OF A.S.T.M. A36 STEEL OR FROM 1/4" STRUCTURAL STEEL TUBING A.S.T.M. A500 OR A501.

OUTSIDE DIMENSIONS OF DRAINS ARE 8" x 4".

LOCATE DRAINS IN THE SLAB BY DIMENSIONS SHOWN IN THE PART ELEVATION.

SHIFT REINFORCING IN FIELD WHERE NECESSARY TO CLEAR DRAINS.

THE DRAINS AND BRACKET ASSEMBLY SHALL BE GALVANIZED IN ACCORDANCE WITH A.S.T.M. A123.

ALL BOLTS, THREADED ROD STUDS, LOCK WASHERS AND NUTS SHALL BE GALVANIZED IN ACCORDANCE WITH A.S.T.M. A153.

SHOP DRAWINGS WILL NOT BE REQUIRED FOR SLAB DRAINS AND THE BRACKET ASSEMBLY.

CONCRETE REQUIRED TO INSTALL SLAB DRAINS SHALL BE CLASS B1.
ALL MATERIAL AND LABOR REQUIRED TO INSTALL SLAB DRAINS AS SHOWN SHALL BE INCLUDED IN THE PRICE BID FOR SLAB DRAINS.

RESIN ANCHOR SYSTEMS SHALL BE INSTALLED ACCORDING TO THE MANUFACTURER'S SPECIFICATION, EXCEPT AS MODIFIED BY THE JOB SPECIAL PROVISIONS. RESIN ANCHOR SYSTEMS SHALL HAVE AN MINIMUM ULTIMATE PULL OUT STRENGTH OF 3,000 LBS. IN CONCRETE WITH F'C = 4,000 PSI (SEE SPECIAL PROVISIONS)

**SLAB DRAIN DETAILS**

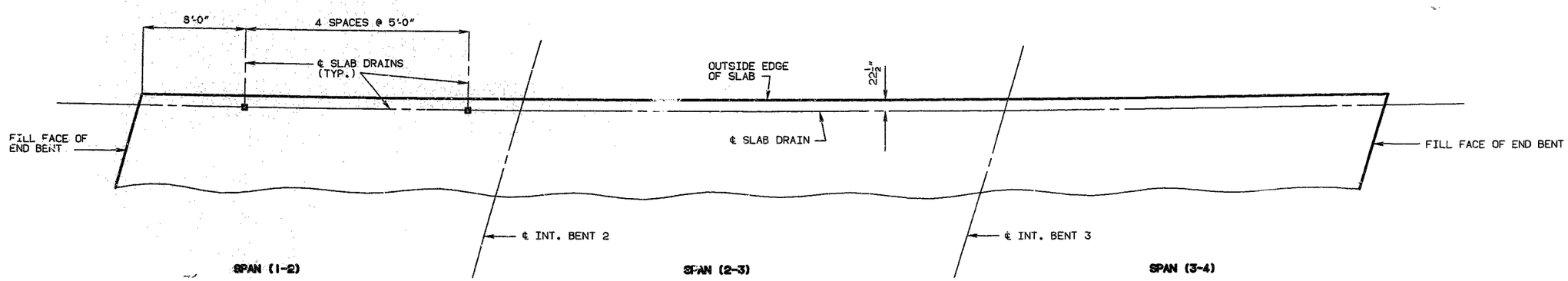


PART PLAN NEAR LEFT BARRIER CURB (E.B.L.)

| DRAIN | ,BS 3.30,P/S, ,A |
|---|---|
| P/S GDR. DRAIN | REVISED |
| JULY 1982 | OCT. 1988 |

DETAILED SEPT.1991
CHECKED MAY 1992

NOTE: THIS DRAWING IS NOT TO SCALE. FOLLOW DIMENSIONS.



JACKSON COUNTY A-1240R1

Sht 26

| STATE | PROJ. NO. | SHEET NO. |
|---|---|---|
| MO. | | 32 |

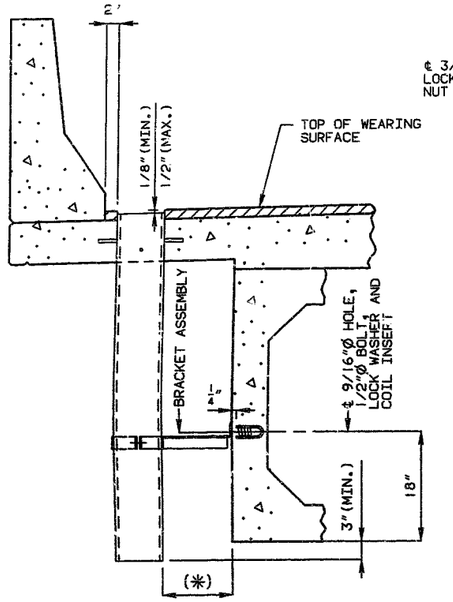


PART ELEVATION OF SLAB AT DRAIN

(*) IF DIMENSION IS LESS THAN 1", DRAINS SHALL BE PLACED PARALLEL TO ROADWAY, OTHERWISE PLACE DRAINS TRANSVERSE TO ROADWAY.

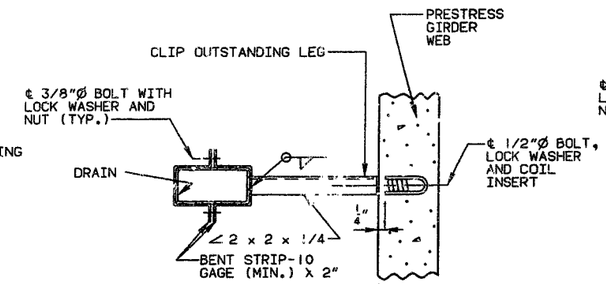


PART SECTION SHOWING BRACKET ASSEMBLY

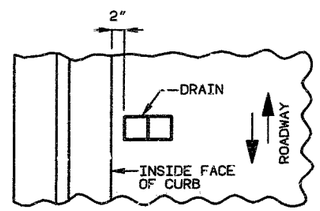


PART PLAN OF SLAB AT DRAIN

DETAILS OF DRAINS TRANSVERSE TO ROADWAY

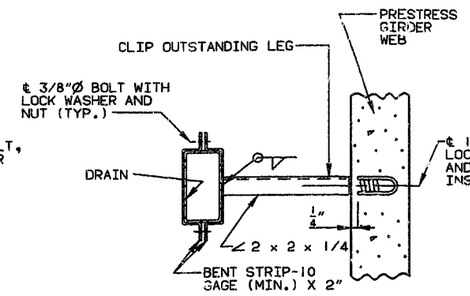


PART SECTION SHOWING BRACKET ASSEMBLY

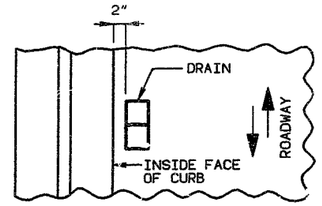


PART PLAN OF SLAB AT DRAIN

DETAILS OF DRAINS PARALLEL TO ROADWAY

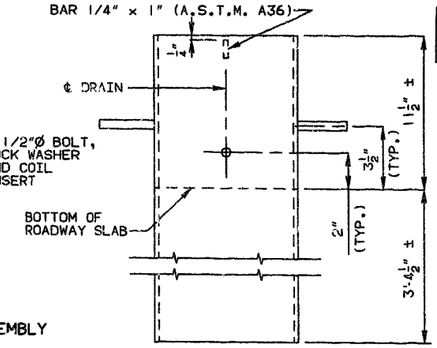


ELEVATION OF DRAIN

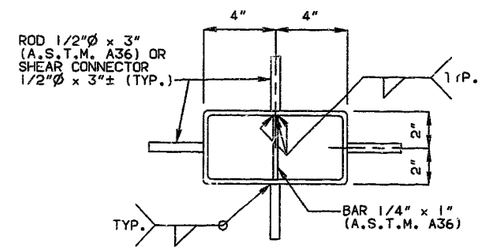


PLAN OF DRAIN

## GENERAL NOTES:

SLAB DRAINS MAY BE FABRICATED OF EITHER 1/4" WELDED SHEETS OF A.S.T.M. A36 STEEL OR FROM 1/4" STRUCTURAL STEEL TUBING A.S.T.M. A500 OR A501.

OUTSIDE DIMENSIONS OF DRAINS ARE 8" x 4".

LOCATE DRAINS IN THE SLAB BY DIMENSIONS SHOWN IN THE PART ELEVATION.

SHIFT REINFORCING IN FIELD WHERE NECESSARY TO CLEAR DRAINS.

THE DRAINS AND BRACKET ASSEMBLY SHALL BE GALVANIZED IN ACCORDANCE WITH A.S.T.M. A123.

ALL BOLTS, THREADED ROD STUDS, LOCK WASHERS AND NUTS SHALL BE GALVANIZED IN ACCORDANCE WITH A.S.T.M. A153.

SHOP DRAWINGS WILL NOT BE REQUIRED FOR SLAB DRAINS AND THE BRACKET ASSEMBLY.

COIL INSERTS SHALL HAVE A CONCRETE PULL-OUT STRENGTH (ULTIMATE LOAD) OF AT LEAST 2,500 POUNDS IN 5,000 PSI CONCRETE.

ALL MATERIALS AND LABOR REQUIRED TO INSTALL SLAB DRAINS AS SHOWN SHALL BE INCLUDED IN THE PRICE BID FOR SLAB DRAINS.

**SLAB DRAIN DETAILS**

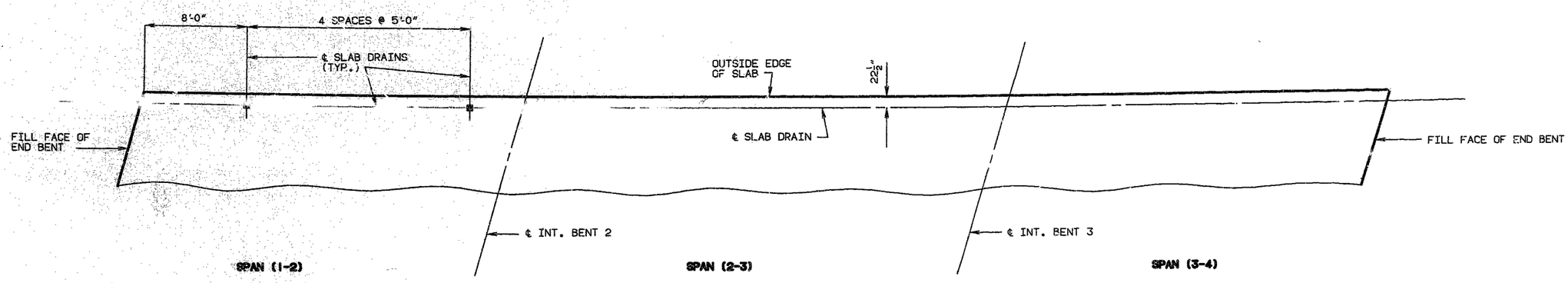


PART PLAN NEAR LEFT BARRIER CURB (W.B.L.)

| DRAIN | GS 3.30,P/S, 1A |
|---|---|
| P/S GDR. DRAIN | REVISED |
| JULY 1982 | OCT. 1988 |

DETAILED SEPT. 1991
CHECKED MAY 1992

NOTE: THIS DRAWING IS NOT TO SCALE. FOLLOW DIMENSIONS.



JACKSON COUNTY A-1240R1

65 37

| STATE | PROJ. NO. | SHEET NO. |
|---|---|---|
| MD. | | 33 |

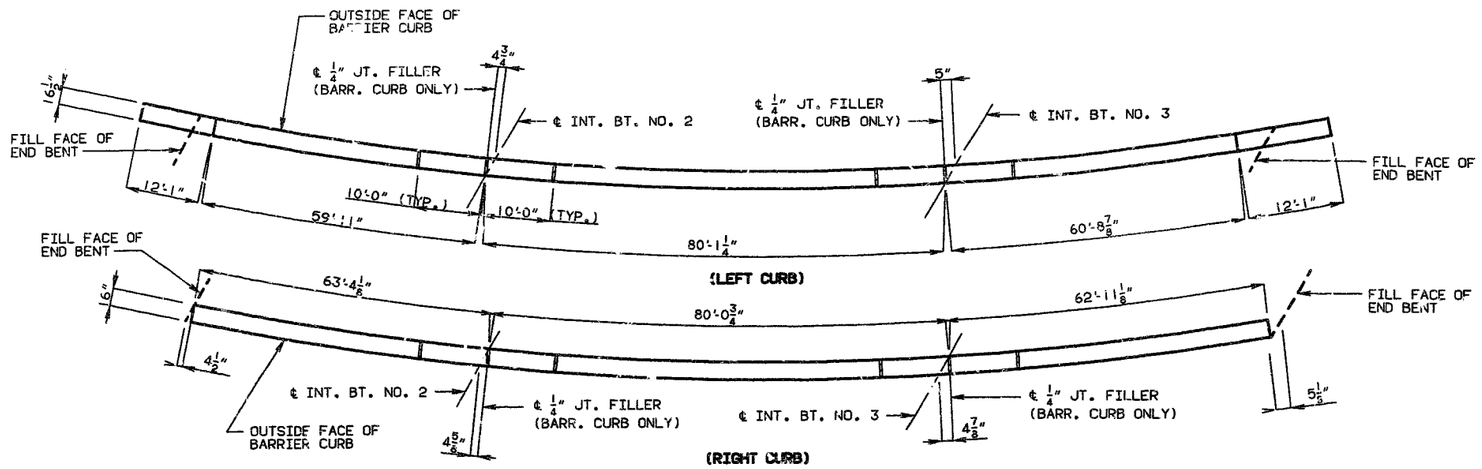


E.B.L.

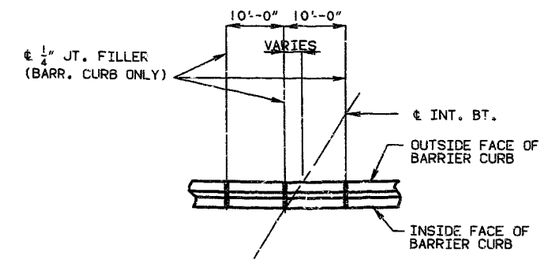


TYP. PART PLAN OF BARRIER CURB NEAR INT. BENT

**NOTE:**

1/4" JT. FILLER IN BARRIER CURBS 10 FOOT ADJACENT TO ℄ INT. BENTS WILL HAVE SAME OFFSETS AS JT. FILLER IN BARRIER CURBS AT ℄ INT. BENTS.

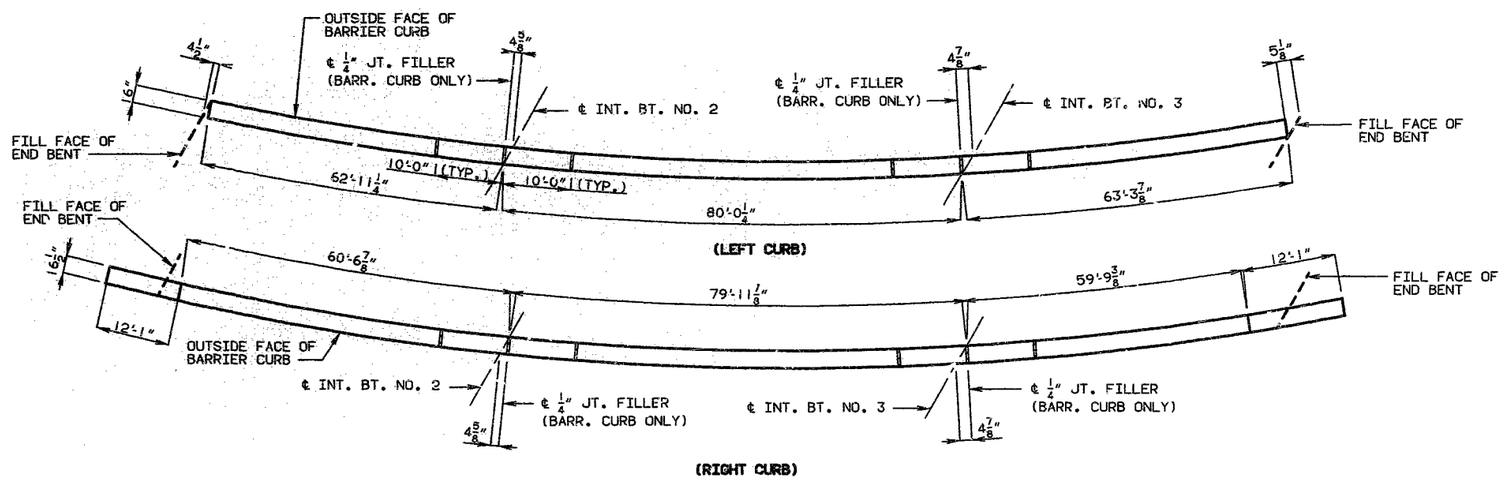


W.B.L.

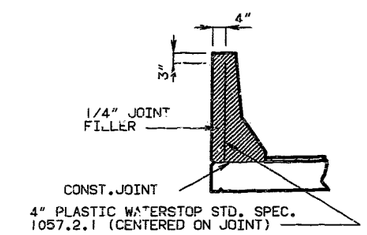


NOTE: PLASTIC WATERSTOP SHALL BE PLACED IN ALL SAFETY BARRIER CURB FILLED JOINTS, (EXCEPT STURUCTURES WITH SUPERELEVATION, USE ON ALL LOWER SAFETY BARRIER CURB JOINTS ONLY).

COST OF PLASTIC WATERSTOP COMPLETE IN PLACE TO BE INCLUDED IN CONTRACT UNIT PRICE FOR SAFETY BARRIER CURB.

NOTE:

WORK THIS SHEET WITH SHEET NO. 22, 23 & 24.

PLAN OF BARRIER CURB

DETAILED SEPT. 1991
CHECKED MAY 1992

NOTE: THIS DRAWING IS NOT TO SCALE. FOLLOW DIMENSIONS.

SHEET NO. 21 OF 35.

JACKSON COUNTY A-1240R1

66 28

| STATE | PROJ. NO. | SHEET NO. |
|---|---|---|
| MO. | | 34 |

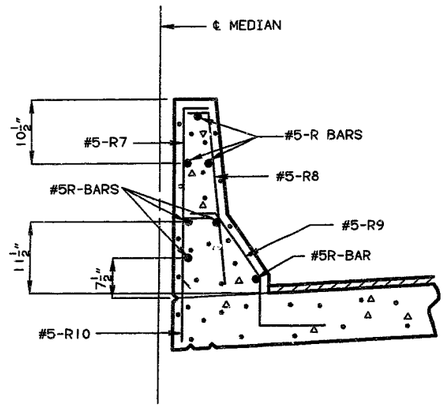


SECTION C-D

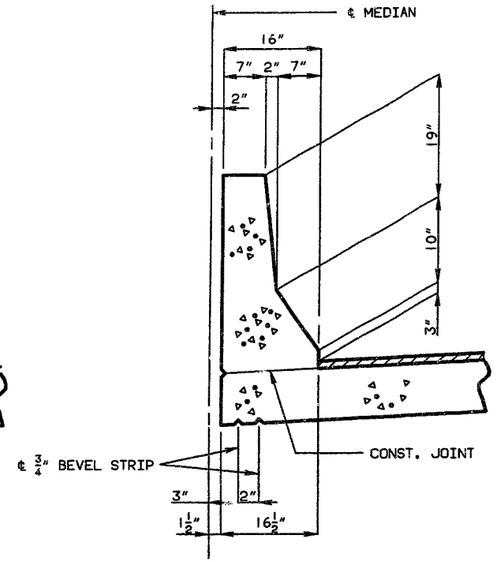


TYPICAL SECTION SHOWING DIMENSIONS

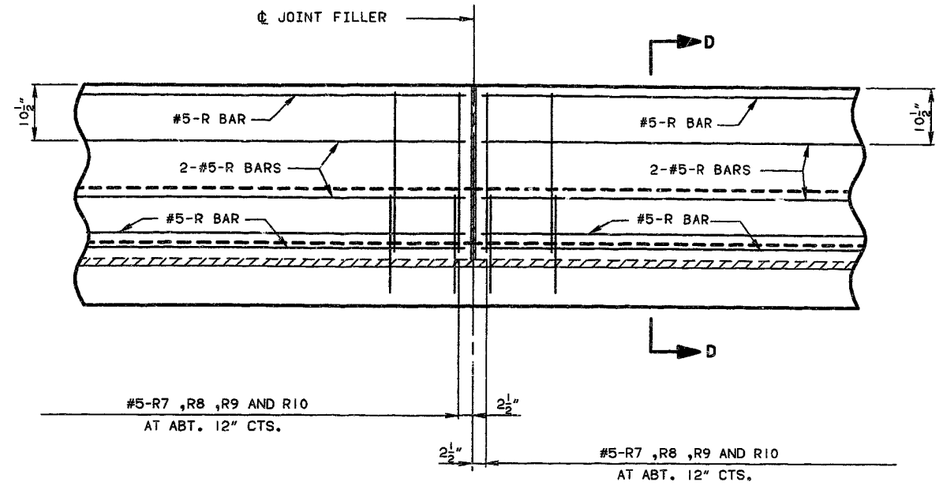


PART ELEVATION OF SAFETY BARRIER CURB NEAR MEDIAN

**NOTE:**

TOP OF SAFETY BARRIER CURB SHALL BE BUILT PARALLEL TO GRADE WITH SAFETY BARRIER CURB JOINTS NORMAL TO GRADE.

ALL EXPOSED EDGES OF SAFETY BARRIER CURB SHALL HAVE EITHER A 1/2" RADIUS OR A 3/8" BEVEL, UNLESS OTHERWISE NOTED.

WHEN THE SAFETY BARRIER CURB IS BID BY LINEAR FEET, THE CONTRACT UNIT PRICE SHALL INCLUDE THE COST OF ALL CONCRETE AND REINFORCEMENT, COMPLETE-IN-PLACE.

CONCRETE FOR THE SAFETY BARRIER CURB SHALL BE CLASS B1.

MEASUREMENT OF THE SAFETY BARRIER CURB IS TO THE NEAREST LINEAR FOOT MEASURED ALONG ℄ MEDIAN AT TOP OF SLAB FROM END TO END OF CURB.

LONGITUDINAL DIMENSIONS ARE HORIZONTAL ARC DIMENSIONS ALONG OUTSIDE EDGE OF SLAB.

FOR DETAIL OF PLASTIC WATERSTOP, SEE SHEET NO. 21.

NOTE: USE A MINIMUM LAP OF 17" FOR #5 HORIZONTAL SAFETY BARRIER CURB BARS.
THE CROSS-SECTIONAL AREA FOR CURB ABOVE THE SLAB = 2.46 SQ. FT.

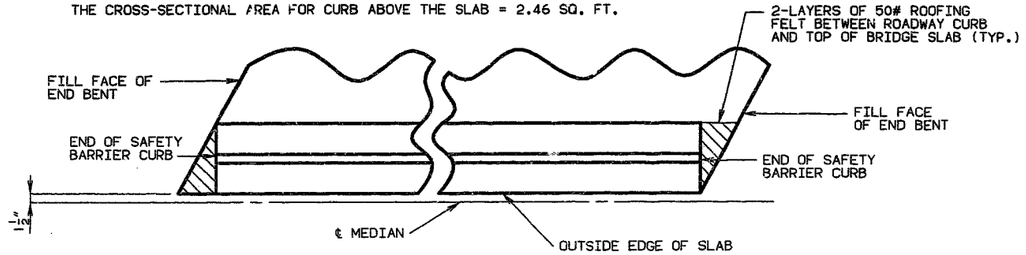


PART PLAN OF SAFETY BARRIER CURB NEAR MEDIAN

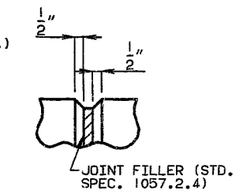


FILLED JOINT DETAIL

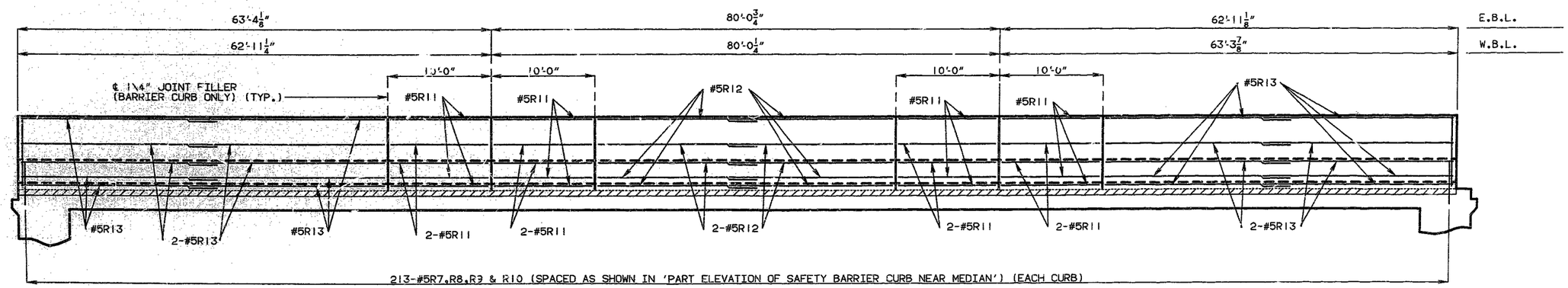


SPAN (1-2) SPAN (2-3) SPAN (3-4)

ELEVATION OF SAFETY BARRIER CURB NEAR MEDIAN

DETAILS OF SAFETY BARRIER CURB NEAR MEDIAN (E.B.L. & W.B.L.)

DETAILED SEPT. 1991
CHECKED MAY 1992

NOTE: THIS DRAWING IS NOT TO SCALE. FOLLOW DIMENSIONS.

SHEET NO. 22 OF 35.

JACKSON COUNTY A-1240R1

9276

| STATE | PROJ. NO. | SHEET NO. |
|---|---|---|
| MO. | | 35 |

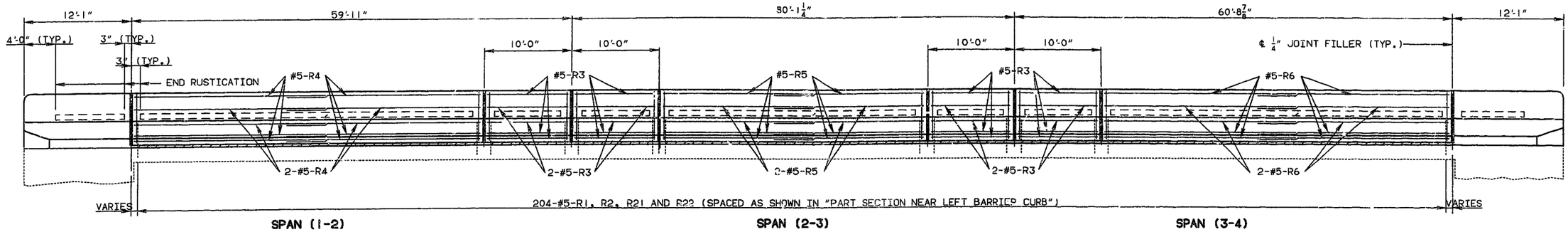


## SECTION NEAR LEFT BARRIER CURB (E.B.L.)

NOTE: LONGITUDINAL DIMENSIONS ARE HORIZONTAL ARC DIMENSIONS ALONG OUTSIDE EDGE OF SLAB.

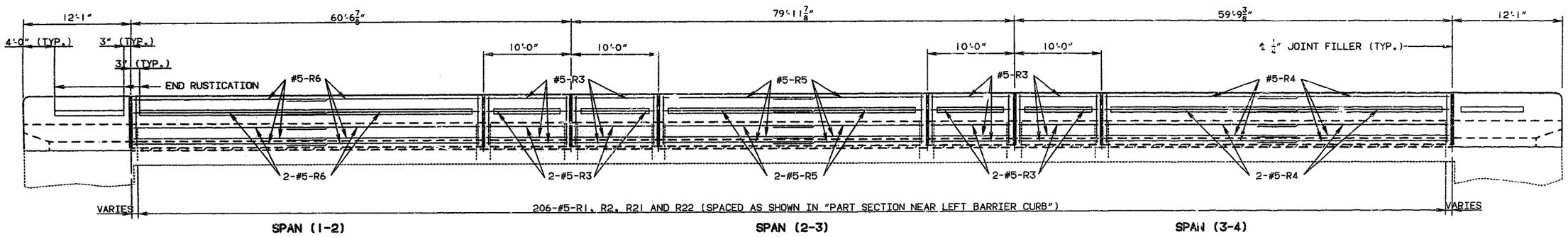


## ELEVATION NEAR RIGHT BARRIER CURB (W.B.L.)

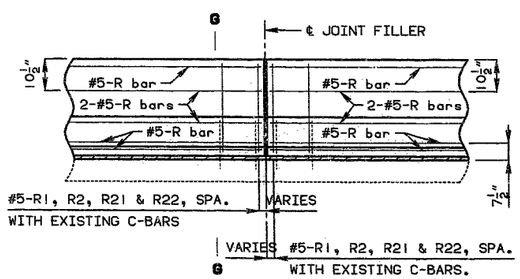


**PART SECTION NEAR LEFT SAFETY BARRIER CURB**
(RUSTICATION NOT SHOWN FOR CLARITY)

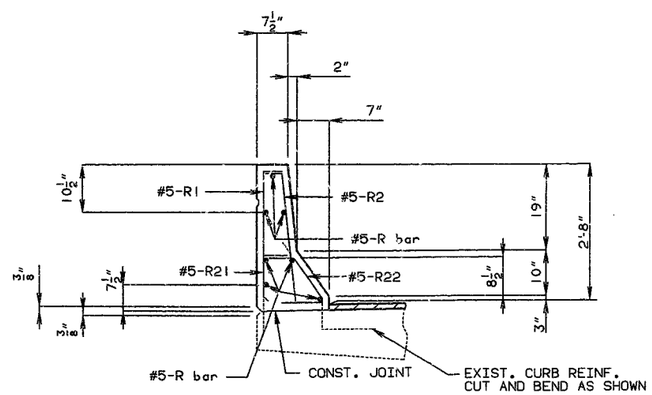


**PART SECTION G-G**

NOTE: USE A MINIMUM LAP OF 17" FOR #5 HORIZONTAL SAFETY BARRIER CURB BARS.
THE CROSS SECTIONAL AREA FOR EACH CURB ABOVE THE SLAB = 2.58 SQ. FT.

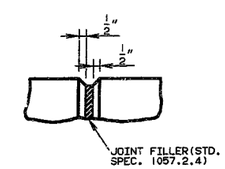


**FILLED JOINT DETAIL**

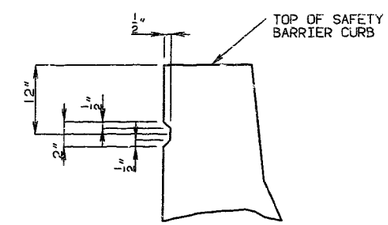


**RUSTICATION DETAIL**

**NOTE:**

TOP OF SAFETY BARRIER CURB SHALL BE BUILT PARALLEL TO GRADE WITH SAFETY BARRIER CURB JOINTS NORMAL TO GRADE.

ALL EXPOSED EDGES OF SAFETY BARRIER CURB SHALL HAVE EITHER A 1/2" RADIUS OR A 3/8" BEVEL, UNLESS OTHERWISE NOTED.

WHEN THE SAFETY BARRIER CURB IS BID BY LINEAR FEET, THE CONTRACT UNIT PRICE SHALL INCLUDE THE COST OF ALL CONCRETE AND REINFORCEMENT, COMPLETE-IN-PLACE.

CONCRETE FOR THE SAFETY BARRIER CURB SHALL BE CLASS B1.

MEASUREMENT OF THE SAFETY BARRIER CURB IS TO THE NEAREST LINEAR FOOT FOR EACH STRUCTURE, MEASURED ALONG THE OUTSIDE TOP OF SLAB FROM END OF WING TO END OF WING.

FOR DETAIL OF PLASTIC WATERSTOP, SEE SHEET NO. 21.

DETAILED SEPT. 1991
CHECKED MAY 1992

NOTE: THIS DRAWING IS NOT TO SCALE. FOLLOW DIMENSIONS.



JACKSON COUNTY

A-1240R1

68 30

| STATE | PROJ. NO. | SHEET NO. |
|---|---|---|
| MO. | | 36 |

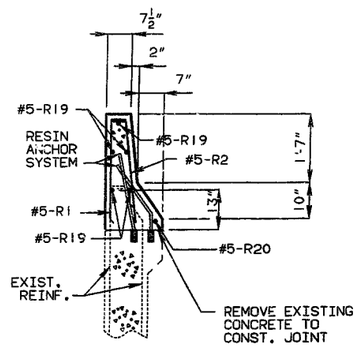


PART SECTION C-C

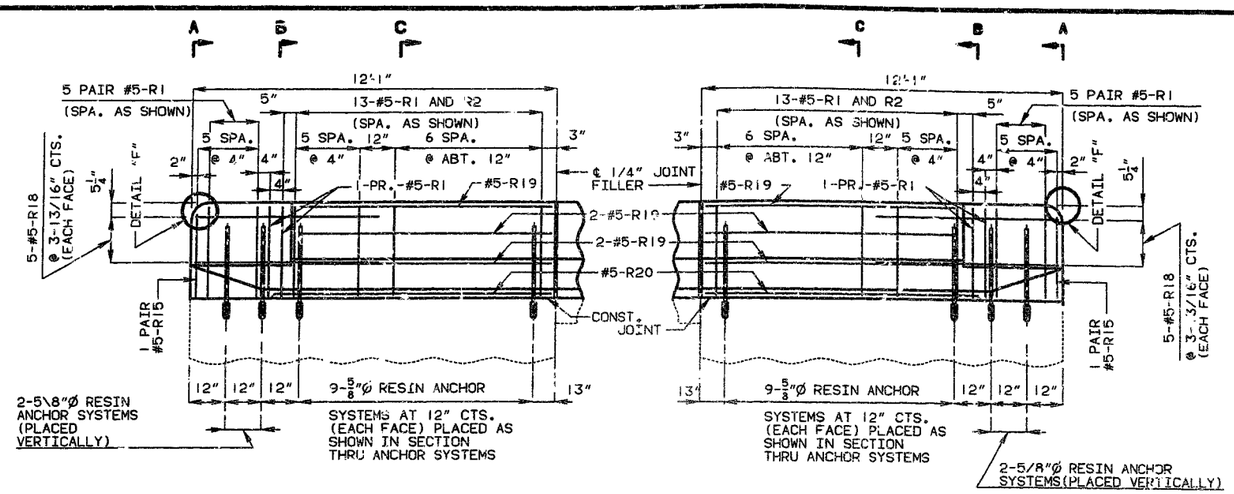


NOTE: RUSTICATION NOT SHOWN FOR CLARITY.

ELEVATION

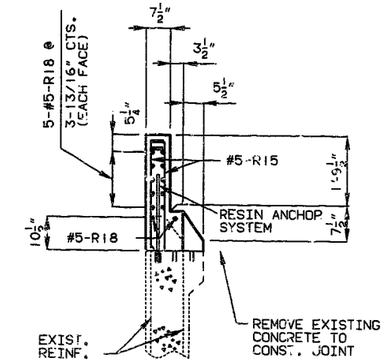


PART SECTION A-A

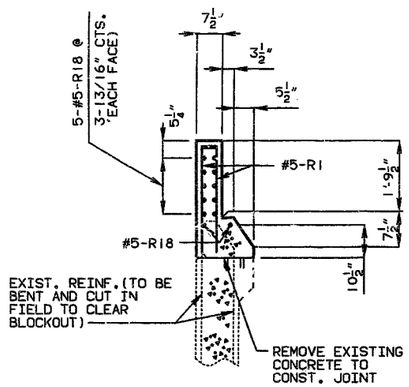


PART SECTION B-B

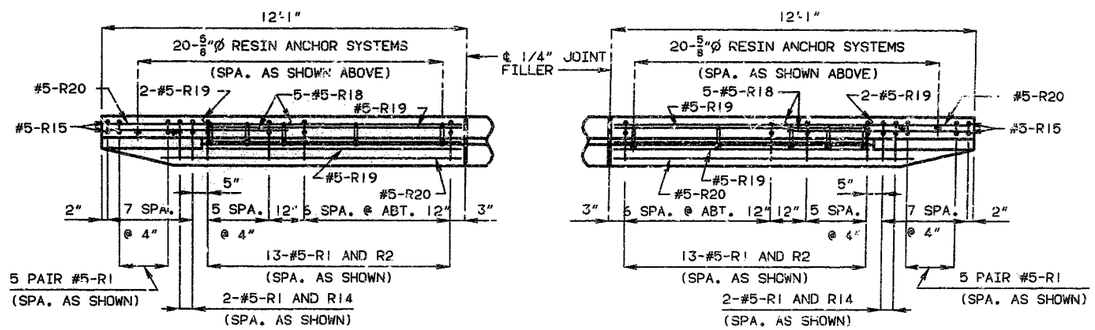


PLAN

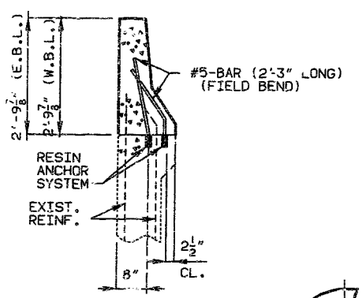


SECTION THRU ANCHOR SYSTEMS

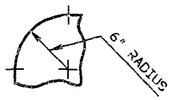


DETAIL "F" (TYPICAL)

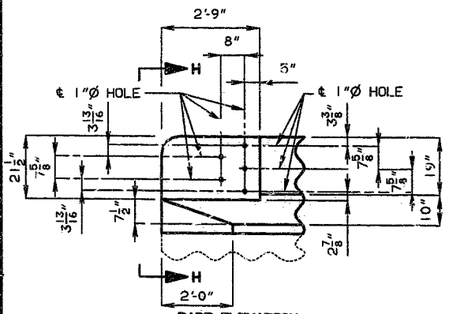


PART ELEVATION

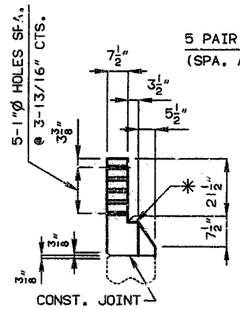


PART ELEVATION H-H

* SLOPE 1/4" TOWARD ROADWAY

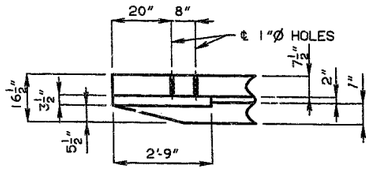


PART PLAN

DETAILS OF GUARD RAIL ATTACHMENT

NOTE:

TOP OF SAFETY BARRIER CURB SHALL BE BUILT PARALLEL TO GRADE WITH SAFETY BARRIER CURB JOINTS (EXCEPT AT END BENTS) NORMAL TO GRADE.

ALL EXPOSED EDGES OF SAFETY BARRIER CURB SHALL HAVE EITHER A 1/2" RADIUS OR A 3/8" BEVEL, UNLESS OTHERWISE NOTED.

WHEN THE SAFETY BARRIER CURB IS BID BY LINEAR FEET, THE CONTRACT UNIT PRICE SHALL INCLUDE THE COST OF ALL CONCRETE AND REINFORCEMENT, COMPLETE-IN-PLACE.

CONCRETE IN THE SAFETY BARRIER CURB SHALL BE CLASS B1.

MEASUREMENT OF SAFETY BARRIER CURB IS TO THE NEAREST LINEAR FOOT FOR EACH STRUCTURE, MEASURED ALONG THE OUTSIDE TOP OF SLAB FROM END OF WING TO END OF WING.

THE CONTRACTOR SHALL USE ONE OF THE RESIN ANCHOR SYSTEMS LISTED IN THE JOB SPECIAL PROVISIONS FOR THE SAFETY BARRIER CURB.

THESE ANCHOR SYSTEMS SHALL BE INSTALLED ACCORDING TO THE MANUFACTURER'S SPECIFICATIONS, EXCEPT AS MODIFIED BY THE JOB SPECIAL PROVISIONS AND THAT AN EPOXY COATED GRADE 60 REINF. BAR(*) 2'-3" LONG SHALL BE SUBSTITUTED FOR THE 5/8"Ø THREADED ROD STUD.

COST OF FURNISHING AND INSTALLING THE ANCHOR SYSTEM COMPLETE IN PLACE SHALL BE INCLUDED IN THE PRICE BID PER LINEAR FOOT OF SAFETY BARRIER CURB.

FOR DETAILS OF RUSTICATION AND PLASTIC WATERSTOP SEE SHEET NO. 21.

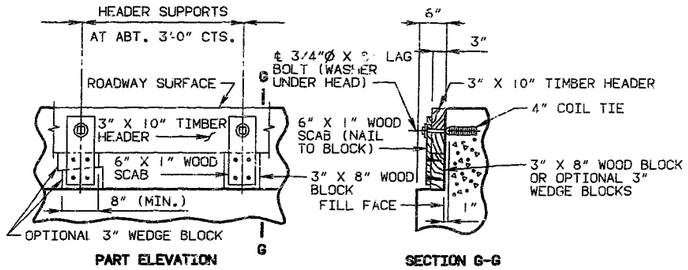


PART ELEVATION

SECTION G-G

NOTE: COST OF TIMBER HEADERS COMPLETE IN PLACE TO BE INCLUDED IN CONTRACT UNIT PRICE FOR CONCRETE.

DETAILS OF TIMBER HEADER AT END BENTS

# DETAILS OF SAFETY BARRIER CURB AT END BENTS

DETAILED SEPT. 1991
CHECKED MAY 1992

NOTE: THIS DRAWING IS NOT TO SCALE. FOLLOW DIMENSIONS.

SHEET NO. 24 OF 35.

JACKSON COUNTY A-1240R1

88-37

| STATE | PROJ. NO. | SHEET NO. |
|---|---|---|
| MO. | | 37 |

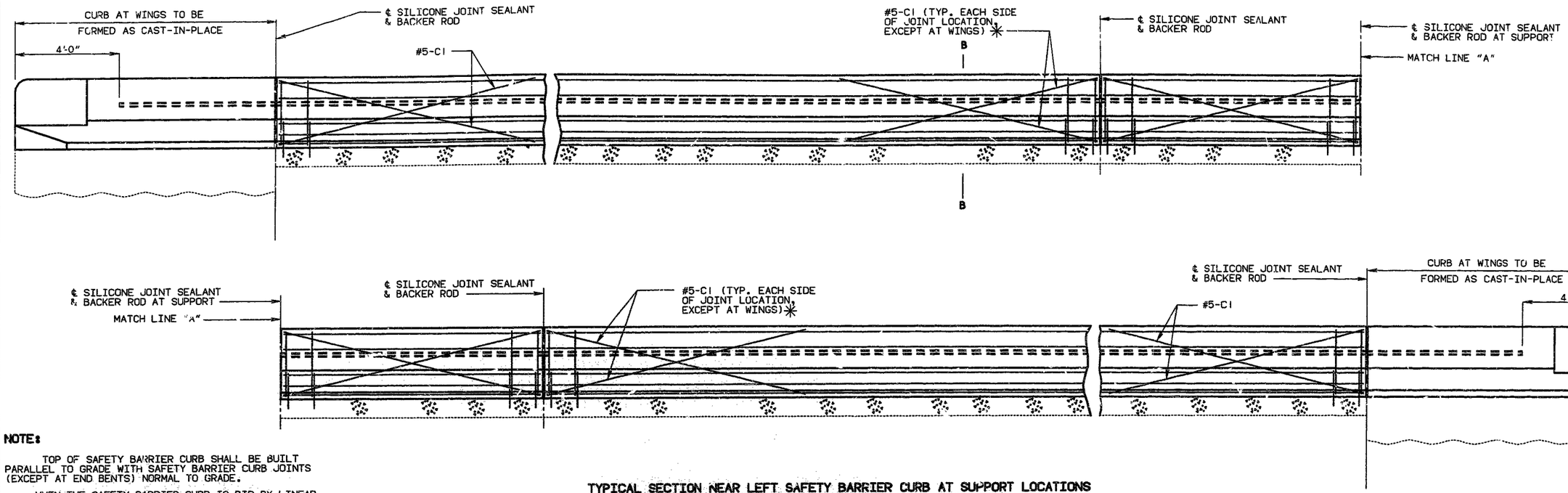


TYPICAL SECTION NEAR LEFT SAFETY BARRIER CURB AT SUPPORT LOCATIONS
(OPTIONAL SLIP-FORM BRIDGE SAFETY BARRIER CURB)

**NOTE:**

TOP OF SAFETY BARRIER CURB SHALL BE BUILT PARALLEL TO GRADE WITH SAFETY BARRIER CURB JOINTS (EXCEPT AT END BENTS) NORMAL TO GRADE.

WHEN THE SAFETY BARRIER CURB IS BID BY LINEAR FEET, THE CONTRACT UNIT PRICE SHALL INCLUDE THE COST OF ALL CONCRETE AND REINFORCEMENT, COMPLETE-IN-PLACE.

CONCRETE IN THE SAFETY BARRIER CURB SHALL BE CLASS B1.

MEASUREMENT OF SAFETY BARRIER CURB IS TO THE NEAREST LINEAR FOOT FOR EACH STRUCTURE, MEASURED ALONG THE OUTSIDE TOP OF SLAB FROM END OF WING TO END OF WING.

**NOTE:**

JOINT SEALANT AND BACKER RODS SHALL BE USED ON ALL SLIP-FORM BRIDGE SAFETY BARRIER CURBS INSTEAD OF JOINT FILLER.

PLASTIC WATERSTOP SHALL NOT BE USED WITH SLIP-FORM OPTION.

C1 BARS (SLIP-FORM OPTION ONLY) SHALL BE USED IN ADDITION TO CAST-IN-PLACE CONVENTIONAL FORMING REINFORCEMENT FOR BRIDGE SAFETY BARRIER CURB.

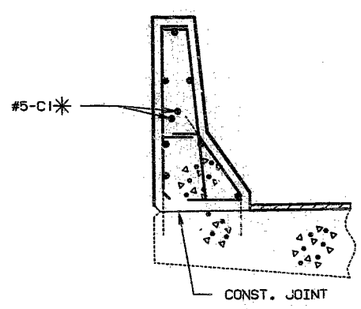


PART SECTION B-B

NOTE: ✳ EACH SIDE OF JOINT LOCATION, EXCEPT SPAN SIDE ONLY AT END BENTS.

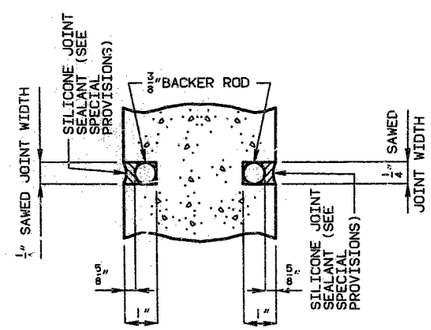


SECTION A-A

NOTE: COST OF SILICONE JOINT SEALANT AND BACKER ROD COMPLETE IN PLACE TO BE INCLUDED IN THE CONTRACT UNIT PRICE FOR SAFETY BARRIER CURB.

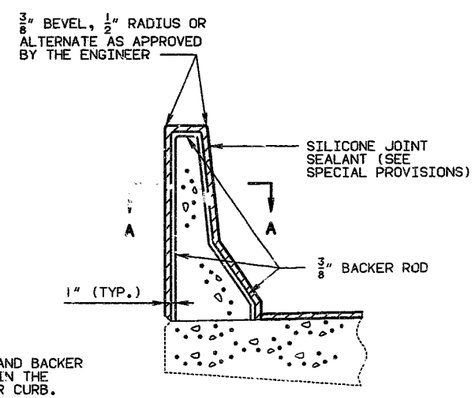


SECTION THRU JOINT

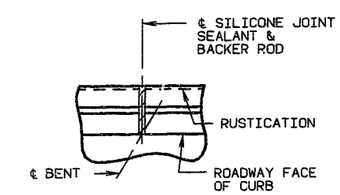


PART PLAN SHOWING SAFETY BARRIER CURB JOINT

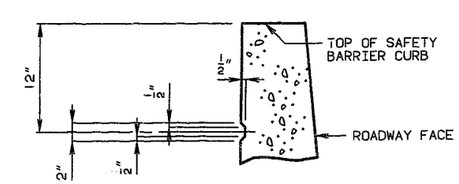


PART SECTION SHOWING RUSTICATION DETAILS

RUSTICATION DETAIL
(USE ON HIGHWAY GRADE SEPARATION ONLY)

# OPTIONAL SLIP-FORM BRIDGE SAFETY BARRIER CURB

B/C SF16,GS 3.30, 1 of 1
BARRIER CURB ELEVATION REVISED:
FEB. 1991

DETAILED MAY 1992
CHECKED MAY 1992

NOTE: THIS DRAWING IS NOT TO SCALE. FOLLOW DIMENSIONS.



JACKSON COUNTY A-1240R1

# BILL OF REINFORCING STEEL

| NO. REQ'D. | MARK NO. SIZE | MARK NO. MARK | LOCATION | EPOXY (E) | SHAPE NO. | STIRRUP (S) | SUBSTR. (X) | VARIES (V) | NO. EACH | B FT. IN. | C FT. IN. | D FT. IN. | E FT. IN. | F FT. IN. | H FT. IN. | K FT. IN. | NOMINAL LENGTH FT. IN. | ACTUAL LENGTH FT. IN. | WEIGHT LBS. |
|---|---|---|---|---|---|---|---|---|---|---|---|---|---|---|---|---|---|---|---|
| | | | **SUBSTRUCTURE** | | | | | | | | | | | | | | | | |
| | | | **INT BT 2 EBL** | | | | | | | | | | | | | | | | |
| 14 | 8D20 | | FOOTING&COL | | 20 | | X | | | 7 9.000 | | | | | | | 7 9 | 7 9 | 290 |
| 8 | 6D21 | | BEAM | | 20 | | X | | | 2 6.000 | | | | | | | 2 6 | 2 6 | 30 |
| 14 | 5D22 | | FOOTING | | 18 | | X | | | 6 8.000 | | | | | | | 7 10 | 7 10 | 114 |
| 6 | 6H20 | | BEAM | | 20 | | X | | | 13 3.000 | | | | | | | 13 3 | 13 3 | 119 |
| 2 | 6H21 | | BEAM | | 20 | | X | | | 13 3.000 | | | | | | | 13 3 | 13 3 | 40 |
| 10 | 8H22 | | BEAM | | 18 | | X | | | 13 3.000 | | | | | | | 15 1 | 15 1 | 403 |
| 26 | 4P1 | | COLUMN | | 16 | | X | | | 2 9.000 | | | | | | | 9 6 | 9 6 | 165 |
| 40 | 6U20 | | BEAM | | 13 | S | X | | | 2 2.000 | 2 9.000 | 2 2.000 | 2 9.000 | | | | 11 2 | 10 8 | 641 |
| 8 | 7U21 | | BEAM | | 21 | | X | | | 3 3.000 | 2 6.000 | 2 6.000 | | | 3 1.500 | 10.500 | 8 3 | 7 10 | 128 |
| 14 | 8V20 | | COLUMN | | 20 | | X | | | 27 8.000 | | | | | | | 27 8 | 27 8 | 1034 |
| | | | **INT BT 2 WBL** | | | | | | | | | | | | | | | | |
| 14 | 8D20 | | FOOTING&COL | | 20 | | X | | | 7 9.000 | | | | | | | 7 9 | 7 9 | 290 |
| 8 | 6D21 | | BEAM | | 20 | | X | | | 2 6.000 | | | | | | | 2 6 | 2 6 | 30 |
| 14 | 5D22 | | FOOTING | | 18 | | X | | | 6 8.000 | | | | | | | 7 10 | 7 10 | 114 |
| 6 | 6H20 | | BEAM | | 20 | | X | | | 13 3.000 | | | | | | | 13 3 | 13 3 | 119 |
| 2 | 6H21 | | BEAM | | 20 | | X | | | 13 3.000 | | | | | | | 13 3 | 13 3 | 40 |
| 10 | 8H22 | | BEAM | | 18 | | X | | | 13 3.000 | | | | | | | 15 1 | 15 1 | 403 |
| 28 | 4P1 | | COLUMN | | 16 | | X | | | 2 9.000 | | | | | | | 9 6 | 9 6 | 178 |
| 40 | 6U20 | | BEAM | | 13 | S | X | | | 2 2.000 | 2 9.000 | 2 2.000 | 2 9.000 | | | | 11 2 | 10 8 | 641 |
| 8 | 7U21 | | BEAM | | 21 | | X | | | 3 3.000 | 2 6.000 | 2 6.000 | | | 3 1.500 | 10.500 | 8 3 | 7 10 | 128 |
| 14 | 8V20 | | COLUMN | | 20 | | X | | | 29 10.000 | | | | | | | 29 10 | 29 10 | 1115 |
| | | | **INT BT 3 EBL** | | | | | | | | | | | | | | | | |
| 14 | 8D30 | | FOOTING&COL | | 20 | | X | | | 7 9.000 | | | | | | | 7 9 | 7 9 | 290 |
| 8 | 6D31 | | BEAM | | 20 | | X | | | 2 6.000 | | | | | | | 2 6 | 2 6 | 30 |
| 14 | 3D32 | | FOOTING | | 18 | | X | | | 6 8.000 | | | | | | | 7 10 | 7 10 | 114 |
| 6 | 6H30 | | BEAM | | 20 | | X | | | 13 3.000 | | | | | | | 13 3 | 13 3 | 119 |
| 2 | 6H31 | | BEAM | | 20 | | X | | | 13 3.000 | | | | | | | 13 3 | 13 3 | 40 |
| 10 | 8H32 | | BEAM | | 18 | | X | | | 13 3.000 | | | | | | | 15 1 | 15 1 | 403 |
| 26 | 4P1 | | COLUMN | | 16 | | X | | | 2 9.000 | | | | | | | 9 6 | 9 6 | 165 |
| 40 | 6U30 | | BEAM | | 13 | S | X | | | 2 2.000 | 2 9.000 | 2 2.000 | 2 9.000 | | | | 11 2 | 10 8 | 641 |
| 8 | 7U31 | | BEAM | | 21 | | X | | | 3 3.125 | 2 6.000 | 2 6.000 | | | 3 1.500 | 11.125 | 8 3 | 7 10 | 128 |
| 14 | 8V30 | | COLUMN | | 20 | | X | | | 28 0.000 | | | | | | | 28 0 | 28 0 | 1047 |

# BILL OF REINFORCING STEEL

| NO. REQ'D. | MARK NO. SIZE | MARK NO. MARK | LOCATION | EPOXY (E) | SHAPE NO. | STIRRUP (S) | SUBSTR. (X) | VARIES (V) | NO. EACH | B FT. IN. | C FT. IN. | D FT. IN. | E FT. IN. | F FT. IN. | H FT. IN. | K FT. IN. | NOMINAL LENGTH FT. IN. | ACTUAL LENGTH FT. IN. | WEIGHT LBS. |
|---|---|---|---|---|---|---|---|---|---|---|---|---|---|---|---|---|---|---|---|
| | | | **INT BT 3 WBL** | | | | | | | | | | | | | | | | |
| 14 | 8D30 | | FOOTING&COL | | 20 | | X | | | 7 9.000 | | | | | | | 7 9 | 7 9 | 290 |
| 8 | 6D31 | | BEAM | | 20 | | X | | | 2 6.000 | | | | | | | 2 6 | 2 6 | 30 |
| 14 | 5D32 | | FOOTING | | 18 | | X | | | 6 8.000 | | | | | | | 7 10 | 7 10 | 114 |
| 6 | 6H30 | | BEAM | | 20 | | X | | | 13 3.000 | | | | | | | 13 3 | 13 3 | 119 |
| 2 | 6H31 | | BEAM | | 20 | | X | | | 13 3.000 | | | | | | | 13 3 | 13 3 | 40 |
| 10 | 8H32 | | BEAM | | 18 | | X | | | 13 3.000 | | | | | | | 15 1 | 15 1 | 403 |
| 26 | 4P1 | | COLUMN | | 16 | | X | | | 2 9.000 | | | | | | | 9 4 | 9 4 | 165 |
| 40 | 6U30 | | BEAM | | 13 | S | X | | | 2 2.000 | 2 9.000 | 2 2.000 | 2 9.000 | | | | 11 2 | 10 8 | 641 |
| 8 | 7U31 | | BEAM | | 21 | | X | | | 3 3.125 | 2 6.000 | 2 6.000 | | | 3 1.500 | 11.125 | 8 3 | 7 10 | 128 |
| 14 | 8V30 | | COLUMN | | 20 | | X | | | 28 0.000 | | | | | | | 28 0 | 28 0 | 1047 |
| | | | **SUPERSTRUCTR** | | | | | | | | | | | | | | | | |
| | | | **END BT 1 EBL** | | | | | | | | | | | | | | | | |
| 10 | 6H10 | | BEAM | | 20 | | | | | 14 9.000 | | | | | | | 14 9 | 14 9 | 222 |
| 6 | 4H11 | | DIAPHRAGM | | 20 | | | | | 14 9.000 | | | | | | | 14 9 | 14 9 | 59 |
| 1 | 4H12 | | APPROACH HCH | | 20 | | | | | 13 6.000 | | | | | | | 13 6 | 13 6 | 9 |
| 3 | 6H13 | | DIAPHRAGM | | 20 | | | | | 2 3.000 | | | | | | | 2 3 | 2 3 | 10 |
| 4 | 6H14 | | DIAPHRAGM | | 20 | | | | | 15 9.000 | | | | | | | 15 9 | 15 9 | 95 |
| 1 | 5H100 | | STRAND TIE | | 20 | | | | | 12 6.000 | | | | | | | 12 6 | 12 6 | 13 |
| 14 | 5U10 | | BEAM | | 13 | S | | | | 2 4.125 | 2 7.000 | 2 4.125 | 2 7.000 | | | | 10 9 | 10 6 | 153 |
| 14 | 4U11 | | APPROACH HCH | | 10 | S | | | | | 17.500 | 6.000 | | | | | 3 5 | 3 3 | 30 |
| 3 | 5U12 | | BEAM | | 10 | S | | | | | 2 7.000 | 2 4.125 | | | | | 7 6 | 7 4 | 23 |
| 15 | 6V10 | | DIAPHRAGM | | 19 | S | | | | 5 1.000 | 3 8.000 | | | | | | 8 9 | 8 7 | 193 |
| 15 | 6V11 | | DIAPHRAGM | | 20 | | | | | 5 1.000 | | | | | | | 5 1 | 5 1 | 115 |
| 3 | 6V12 | | DIAPHRAGM | | 19 | S | | | | 5 1.000 | 2 4.125 | | | | | | 7 5 | 7 3 | 33 |
| | | | **END BT 1 WBL** | | | | | | | | | | | | | | | | |
| 10 | 6H10 | | BEAM | | 20 | | | | | 14 9.000 | | | | | | | 14 9 | 14 9 | 222 |
| 6 | 4H11 | | DIAPHRAGM | | 20 | | | | | 14 9.000 | | | | | | | 14 9 | 14 9 | 59 |
| 1 | 4H12 | | APPROACH HCH | | 20 | | | | | 13 6.000 | | | | | | | 13 6 | 13 6 | 9 |
| 3 | 6H13 | | DIAPHRAGM | | 20 | | | | | 2 3.000 | | | | | | | 2 3 | 2 3 | 10 |
| 4 | 6H14 | | DIAPHRAGM | | 20 | | | | | 15 9.000 | | | | | | | 15 9 | 15 9 | 95 |
| 1 | 5H100 | | STRAND TIE | | 20 | | | | | 12 6.000 | | | | | | | 12 6 | 12 6 | 13 |
| 14 | 5U10 | | BEAM | | 13 | S | | | | 2 4.125 | 2 7.000 | 2 4.125 | 2 7.000 | | | | 10 9 | 10 6 | 153 |
| 14 | 4U11 | | APPROACH HCH | | 10 | S | | | | | 17.500 | 6.000 | | | | | 3 5 | 3 3 | 30 |
| 3 | 5U12 | | BEAM | | 10 | S | | | | | 2 7.000 | 2 4.125 | | | | | 7 6 | 7 4 | 23 |
| 15 | 6V10 | | DIAPHRAGM | | 19 | S | | | | 5 1.000 | 3 8.000 | | | | | | 8 9 | 8 7 | 193 |
| 15 | 6V11 | | DIAPHRAGM | | 20 | | | | | 5 1.000 | | | | | | | 5 1 | 5 1 | 115 |
| 3 | 6V12 | | DIAPHRAGM | | 19 | S | | | | 5 1.000 | 2 4.125 | | | | | | 7 5 | 7 3 | 33 |

| STATE | PROJ. NO. | SHEET NO. |
|---|---|---|
| NO. | | 38 |

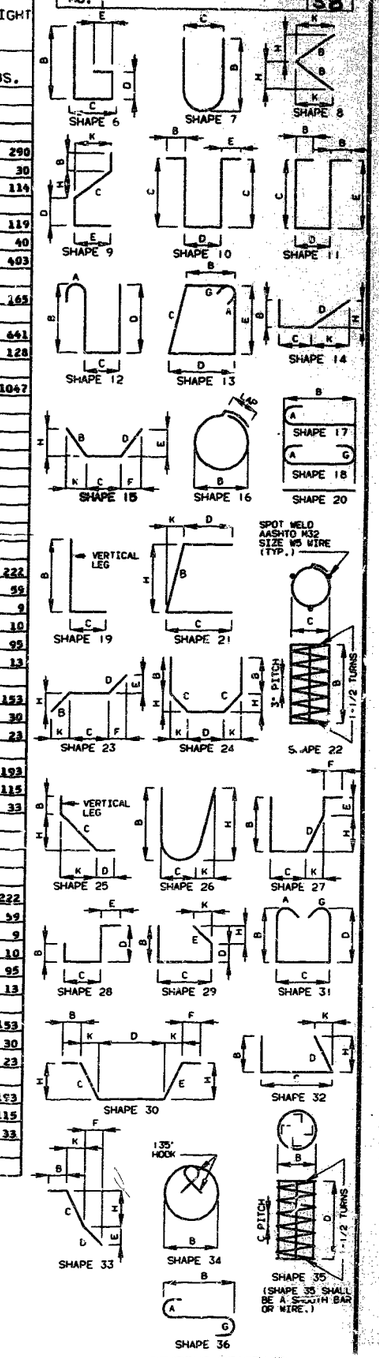


BENDING DIAGRAMS

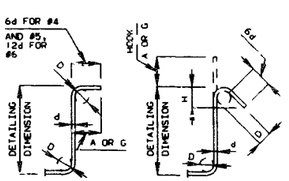


| STIRRUP HOOK DIMENSIONS | | | | |
|---|---|---|---|---|
| GRADES 40 - 50 - 60 KSI | | | | |
| BAR SIZE | D (IN.) | 90° HOOK | 135° HOOK | |
| | | HOOK A OR G | HOOK A OR G | APPROX. H |
| #4 | 2" | 4-1/2" | 4-1/2" | 3" |
| #5 | 2-1/2" | 6" | 5-1/2" | 3-3/4" |
| #6 | 4-1/2" | 12" | 8" | 4-1/2" |

NOTE: UNLESS OTHERWISE NOTED DIAMETER "D" IS THE SAME FOR ALL BENDS AND HOOKS ON A BAR.

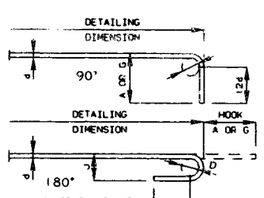


| END HOOK DIMENSIONS | | | | |
|---|---|---|---|---|
| BAR SIZE | (IN.) | ALL GRADES | | |
| | | A OR G | J | 90° HOOKS A OR G |
| #3 | 2-1/4" | 5" | 2" | 6" |
| #4 | 3" | 6" | 4" | 8" |
| #5 | 3-3/4" | 7" | 5" | 10" |
| #6 | 4-1/2" | 8" | 6" | 12" |
| #7 | 5-1/2" | 10" | 7" | 14" |
| #8 | 6" | 11" | 8" | 16" |
| #9 | 9-1/2" | 15" | 11-3/4" | 19" |
| #10 | 10-3/4" | 17" | 13-1/4" | 22" |
| #11 | 12" | 19" | 14-3/4" | 2'-0" |
| #14 | 18-1/4" | 2'-3" | 21-3/4" | 2'-7" |

NOTE: THIS DRAWING IS NOT TO SCALE. FOLLOW DIMENSIONS.

NOTE:
ALL STANDARD HOOKS AND BENDS OTHER THAN 180 DEG. TO BE BENT WITH THE SAME PROCEDURE AS FOR 90 DEG. STD. HOOKS.
HOOKS AND BENDS SHALL BE IN ACCORDANCE WITH THE PROCEDURES AS SHOWN ON THIS SHEET.
E = EPOXY COATED REINFORCEMENT.
S = STIRRUP.
X = BAR IS INCLUDED IN SUBSTRUCTURE QUANTITIES.
V = BAR DIMENSIONS VARY IN EQUAL INCREMENTS BETWEEN DIMENSIONS SHOWN ON THIS LINE AND THE FOLLOWING LINE.
NO. EA. = NUMBER OF BARS OF EACH LENGTH.
NOMINAL LENGTHS ARE BASED ON OUT TO OUT DIMENSIONS SHOWN IN BENDING DIAGRAMS AND ARE LISTED FOR FABRICATORS USE. (NEAREST INCH)
ACTUAL LENGTHS ARE MEASURED ALONG CENTERLINE BAR TO THE NEAREST INCH.
PAYWEIGHTS ARE BASED ON ACTUAL LENGTHS.
FOUR ANGLE OR CHANNEL SPACERS ARE REQUIRED FOR EACH COLUMN SPIRAL. SPACERS ARE TO BE PLACED ON INSIDE OF SPIRALS. LENGTH AND WEIGHT OF COLUMN SPIRALS DO NOT INCLUDE SPLICES OR SPACERS.
REINFORCING STEEL (GRADE 60) = FY 60,000 PSI.

STD 90.8 REVISED MAY 1974 OCT. 1991

DETAILED 19
CHECKED 19



JACKSON COUNTY

A-1240R1

# BILL OF REINFORCING STEEL

| NO. REQ'D. | MARK NO. (SIZE MARK) | LOCATION | EPOXY (E) | SHAPE NO. | STIRRUP (S) | SUBSTR. (X) | VARIES (V) | NO. EACH | B FT. IN. | C FT. IN. | D FT. IN. | E FT. IN. | F FT. IN. | H FT. IN. | K FT. IN. | NOMINAL LENGTH FT. IN. | ACTUAL LENGTH FT. IN. | WEIGHT LBS. |
|---|---|---|---|---|---|---|---|---|---|---|---|---|---|---|---|---|---|---|
| | | END BT 4 EBL | | | | | | | | | | | | | | | | |
| 10 | 4M40 | BEAM | | 20 | | | | | 14 11.000 | | | | | | | 14 11 | 14 11 | 224 |
| 6 | 4M41 | DIAPHRAGM | | 20 | | | | | 14 11.000 | | | | | | | 14 11 | 14 11 | 60 |
| 1 | 4M42 | APPROACH MCH | | 20 | | | | | 13 6.000 | | | | | | | 13 6 | 13 6 | 9 |
| 3 | 6M43 | DIAPHRAGM | | 20 | | | | | 2 3.000 | | | | | | | 2 3 | 2 3 | 10 |
| 4 | 6M44 | DIAPHRAGM | | 20 | | | | | 15 11.000 | | | | | | | 15 11 | 15 11 | 96 |
| 1 | 5M400 | STRAND TIE | | 20 | | | | | 12 6.000 | | | | | | | 12 6 | 12 6 | 13 |
| 14 | 5U40 | BEAM | | 13 | S | | | | 2 4.125 | 2 7.000 | 2 4.125 | 2 7.000 | | | | 10 9 | 10 6 | 153 |
| 14 | 4U41 | APPROACH MCH | | 10 | S | | | | | 17.500 | 6.000 | | | | | 3 5 | 3 3 | 30 |
| 3 | 5U42 | BEAM | | 10 | S | | | | | 2 7.000 | 2 4.125 | | | | | 7 6 | 7 4 | 23 |
| 15 | 6V40 | DIAPHRAGM | | 19 | S | | | | 5 1.000 | 3 8.000 | | | | | | 8 9 | 8 7 | 193 |
| 15 | 6V41 | DIAPHRAGM | | 20 | | | | | 5 1.000 | | | | | | | 5 1 | 5 1 | 115 |
| 3 | 6V42 | DIAPHRAGM | | 19 | S | | | | 5 1.000 | 2 4.125 | | | | | | 7 5 | 7 3 | 33 |
| | | END BT 4 WBL | | | | | | | | | | | | | | | | |
| 10 | 4M40 | BEAM | | 20 | | | | | 14 11.000 | | | | | | | 14 11 | 14 11 | 224 |
| 6 | 4M41 | DIAPHRAGM | | 20 | | | | | 14 11.000 | | | | | | | 14 11 | 14 11 | 60 |
| 1 | 4M42 | APPROACH MCH | | 20 | | | | | 13 6.000 | | | | | | | 13 6 | 13 6 | 9 |
| 3 | 6M43 | DIAPHRAGM | | 20 | | | | | 2 3.000 | | | | | | | 2 3 | 2 3 | 10 |
| 4 | 6M44 | DIAPHRAGM | | 20 | | | | | 15 11.000 | | | | | | | 15 11 | 15 11 | 96 |
| 1 | 5M400 | STRAND TIE | | 20 | | | | | 12 6.000 | | | | | | | 12 6 | 12 6 | 13 |
| 14 | 5U40 | BEAM | | 13 | S | | | | 2 4.125 | 2 7.000 | 2 4.125 | 2 7.000 | | | | 10 9 | 10 6 | 153 |
| 14 | 4U41 | APPROACH MCH | | 10 | S | | | | | 17.500 | 6.000 | | | | | 3 5 | 3 3 | 30 |
| 3 | 5U42 | BEAM | | 10 | S | | | | | 2 7.000 | 2 4.125 | | | | | 7 6 | 7 4 | 23 |
| 15 | 6V40 | DIAPHRAGM | | 19 | S | | | | 5 1.000 | 3 8.000 | | | | | | 8 9 | 8 7 | 193 |
| 15 | 6V41 | DIAPHRAGM | | 20 | | | | | 5 1.000 | | | | | | | 5 1 | 5 1 | 115 |
| 3 | 6V42 | DIAPHRAGM | | 19 | S | | | | 5 1.000 | 2 4.125 | | | | | | 7 5 | 7 3 | 33 |
| | | DIAPHRAGMS @ | | | | | | | | | | | | | | | | |
| | | INT BTS 263 | | | | | | | | | | | | | | | | |
| 54 | 5M115 | DIAPHRAGM | | 20 | | | | | 3 9.000 | | | | | | | 3 9 | 3 9 | 750 |
| 24 | 5M116 | DIAPHRAGM | | 20 | | | | | 13 3.000 | | | | | | | 13 3 | 13 3 | 332 |
| 24 | 5M117 | DIAPHRAGM | | 21 | S | | | | 2 2.000 | 18.000 | | | | 2 1.000 | 7.125 | 3 8 | 3 6 | 88 |
| 24 | 5M118 | DIAPHRAGM | | 15 | S | | | | 18.125 | 2 2.500 | | | | 17.375 | 5.000 | 3 9 | 3 8 | 92 |
| 32 | 4M119 | DIAPHRAGM | | 28 | S | | | | | 2 7.000 | 3 7.000 | 17.000 | | | | 7 2 | 7 0 | 150 |
| 48 | 5M120 | DIAPHRAGM | | 10 | S | | | | 14.000 | 3 7.000 | 7.250 | 14.000 | | | | 10 1 | 9 8 | 484 |
| | | C.I.P. SLAB | | | | | | | | | | | | | | | | |
| 780 | 6S1 | SLAB | | 20 | | | | | 2 2.000 | | | | | | | 2 2 | 2 2 | 2538 |
| 780 | 6S2 | SLAB | | 20 | | | | | 15 9.000 | | | | | | | 15 9 | 15 9 | 18452 |
| 156 | 6S3 | SLAB | | 20 | | | | | 36 4.000 | | | | | | | 36 4 | 36 4 | 8513 |
| 96 | 6S4 | SLAB | | 20 | | | | | 19 4.000 | | | | | | | 19 4 | 19 4 | 2788 |

# BILL OF REINFORCING STEEL

| NO. REQ'D. | MARK NO. (SIZE MARK) | LOCATION | EPOXY (E) | SHAPE NO. | STIRRUP (S) | SUBSTR. (X) | VARIES (V) | NO. EACH | B FT. IN. | C FT. IN. | D FT. IN. | E FT. IN. | F FT. IN. | H FT. IN. | K FT. IN. | NOMINAL LENGTH FT. IN. | ACTUAL LENGTH FT. IN. | WEIGHT LBS. |
|---|---|---|---|---|---|---|---|---|---|---|---|---|---|---|---|---|---|---|
| | | BARRIER CURB | | | | | | | | | | | | | | | | |
| | | NEAR MEDIAN | | | | | | | | | | | | | | | | |
| 426 | 5R7 | CURBS@MEDIAN | | 19 | S | | | | 2 7.500 | 3.500 | | | | | | 2 11 | 2 10 | 1259 |
| 426 | 5R8 | CURBS@MEDIAN | | 15 | S | | | | 2 7.625 | 3.500 | | | | 2 7.500 | 3.000 | 2 11 | 2 10 | 1259 |
| 426 | 5R9 | CURBS@MEDIAN | | 27 | S | | | | | 6.500 | 11.125 | 8.500 | 12.000 | 9.125 | 6.375 | 3 2 | 3 0 | 1333 |
| 426 | 5R10 | CURBS@MEDIAN | | 19 | S | | | | 18.500 | 6.500 | | | | | | 2 1 | 2 0 | 809 |
| 56 | 5R11 | CURBS@MEDIAN | | 20 | | | | | 9 9.000 | | | | | | | 9 9 | 9 9 | 569 |
| 28 | 5R12 | CURBS@MEDIAN | | 20 | | | | | 30 8.000 | | | | | | | 30 8 | 30 8 | 896 |
| 54 | 5R13 | CURBS@MEDIAN | | 20 | | | | | 27 3.000 | | | | | | | 27 3 | 27 3 | 1592 |
| | | EXTERIOR | | | | | | | | | | | | | | | | |
| | | BARRIER CURB | | | | | | | | | | | | | | | | |
| 516 | 5R1 | EXT. CURBS | | 19 | S | | | | 2 7.500 | 3.500 | | | | | | 2 11 | 2 10 | 1531 |
| 462 | 5R2 | EXT. CURBS | | 15 | S | | | | 2 7.625 | 3.500 | | | | 2 7.500 | 3.000 | 2 11 | 2 10 | 1365 |
| 56 | 5R3 | EXT. CURBS | | 20 | | | | | 9 9.000 | | | | | | | 9 9 | 9 9 | 569 |
| 28 | 5R4 | EXT. CURBS | | 20 | | | | | 25 7.000 | | | | | | | 25 7 | 25 7 | 747 |
| 28 | 5R5 | EXT. CURBS | | 20 | | | | | 30 8.000 | | | | | | | 30 8 | 30 8 | 896 |
| 28 | 5R6 | EXT. CURBS | | 20 | | | | | 26 0.000 | | | | | | | 26 0 | 26 0 | 759 |
| 8 | 5R15 | EXT. CURBS | | 19 | S | | | | 2 3.000 | 3.500 | | | | | | 2 7 | 2 5 | 20 |
| 40 | 5R18 | EXT. CURBS | | 20 | | | | | 5 0.000 | | | | | | | 5 0 | 5 0 | 209 |
| 18 | 5R19 | EXT. CURBS | | 20 | | | | | 9 1.000 | | | | | | | 9 1 | 9 1 | 189 |
| 4 | 5R20 | EXT. CURBS | | 20 | | | | | 10 0.000 | | | | | | | 10 0 | 10 0 | 42 |
| 410 | 5R21 | EXT. CURBS | | 1 | S | | | | 12.000 | 6.500 | | | | | | 19 | 17 | 6 |
| 410 | 5R22 | EXT. CURBS | | 27 | S | | | | | 3.000 | 11.125 | 6.500 | | 6.375 | 9.125 | 21 | 20 | 713 |
| 40 | 5C1 | (SLIP-FORMED | | 20 | | | | | 10 0.000 | | | | | | | 10 0 | 10 0 | 417 |
| | | CURB ONLY) | | | | | | | | | | | | | | | | |
| | | END OF LIST | | | | | | | | | | | | | | | | |

| STATE | PROJ. NO. | SHEET NO. |
|---|---|---|
| NO. | | 39 |

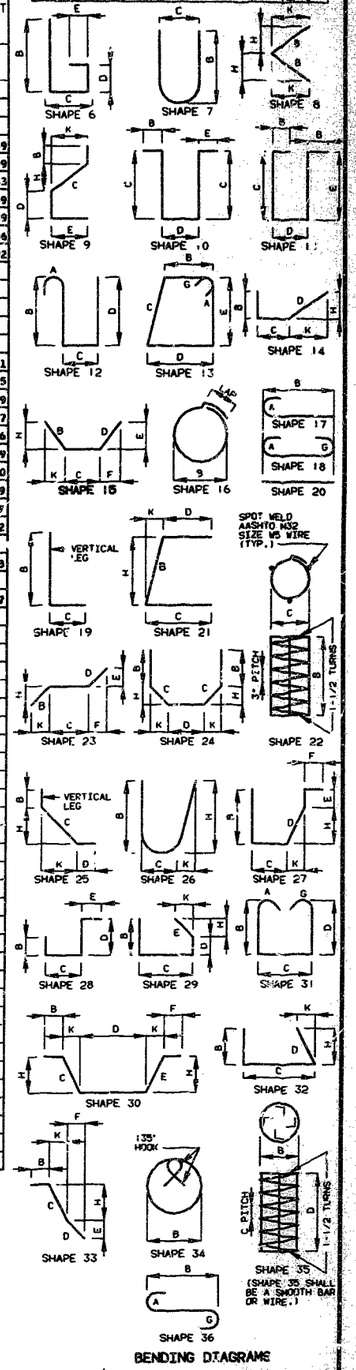


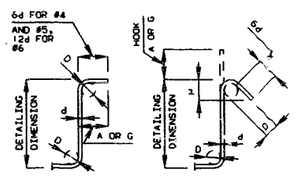


| STIRRUP HOOK DIMENSIONS | | | | |
|---|---|---|---|---|
| GRADES 40 - 50 - 60 KSI | | | | |
| BAR SIZE | D (IN.) | 90° HOOK | 135° HOOK | |
| | | HOOK A OR G | HOOK A OR G | APPROX. H |
| #4 | 2" | 4-1/2" | 4-1/2" | 3" |
| #5 | 2-1/2" | 6" | 5-1/2" | 3-3/4" |
| #6 | 4-1/2" | 12" | 8" | 4-1/2" |

NOTE: UNLESS OTHERWISE NOTED DIAMETER "D" IS THE SAME FOR ALL BENDS AND HOOKS ON A BAR.

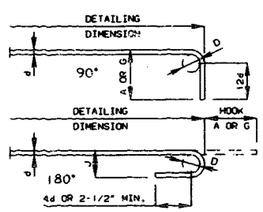


| END HOOK DIMENSIONS | | | | |
|---|---|---|---|---|
| BAR SIZE | D (IN.) | ALL GRADES | | |
| | | 180 HOOKS | | 90 HOOKS |
| | | A OR G | J | A OR G |
| #3 | 2-1/4" | 5" | 3" | 6" |
| #4 | 3" | 6" | 4" | 8" |
| #5 | 3-3/4" | 7" | 5" | 10" |
| #6 | 4-1/2" | 8" | 6" | 12" |
| #7 | 5-1/4" | 10" | 7" | 14" |
| #8 | 6" | 11" | 8" | 16" |
| #9 | 9-1/2" | 15" | 11-3/4" | 19" |
| #10 | 10-3/4" | 17" | 13-1/4" | 22" |
| #11 | 12" | 19" | 14-3/4" | 2'-0" |
| #14 | 18-1/4" | 2'-3" | 21-3/4" | 2'-7" |

**NOTE:**
ALL STANDARD HOOKS AND BENDS OTHER THAN 180 DEG. TO BE BENT WITH THE SAME PROCEDURE AS FOR 90 DEG. STD. HOOKS.
HOOKS AND BENDS SHALL BE IN ACCORDANCE WITH THE PROCEDURES AS SHOWN ON THIS SHEET.
E = EPOXY COATED REINFORCEMENT.
S = STIRRUP.
X = BAR IS INCLUDED IN SUBSTRUCTURE QUANTITIES.
V = BAR DIMENSIONS VARY IN EQUAL INCREMENTS BETWEEN DIMENSIONS SHOWN ON THIS LINE AND THE FOLLOWING LINE.
NO. EA. = NUMBER OF BARS OF EACH LENGTH.
NOMINAL LENGTHS ARE BASED ON OUT TO OUT DIMENSIONS SHOWN IN BENDING DIAGRAMS AND ARE LISTED FOR FABRICATORS USE. (NEAREST INCH)
ACTUAL LENGTHS ARE MEASURED ALONG CENTERLINE BAR TO THE NEAREST INCH.
PAYWEIGHTS ARE BASED ON ACTUAL LENGTHS.
FOUR ANGLE OR CHANNEL SPACERS ARE REQUIRED FOR EACH COLUMN SPIRAL. SPACERS ARE TO BE PLACED ON INSIDE OF SPIRALS. LENGTH AND WEIGHT OF COLUMN SPIRALS DO NOT INCLUDE SPLICES OR SPACERS.
REINFORCING STEEL (GRADE 60) = FY 60,000 PSI.

| STD 90.8 | REVISED |
|---|---|
| MAY 1974 | OCT. 1991 |

DETAILED 19
CHECKED 19

NOTE: THIS DRAWING IS NOT TO SCALE. FOLLOW DIMENSIONS.

SHEET NO. 27 OF 35

JACKSON COUNTY

A-1240R1

| STATE | PROJ. NO. | SHEET NO. |
|---|---|---|
| MO. | | 40 |

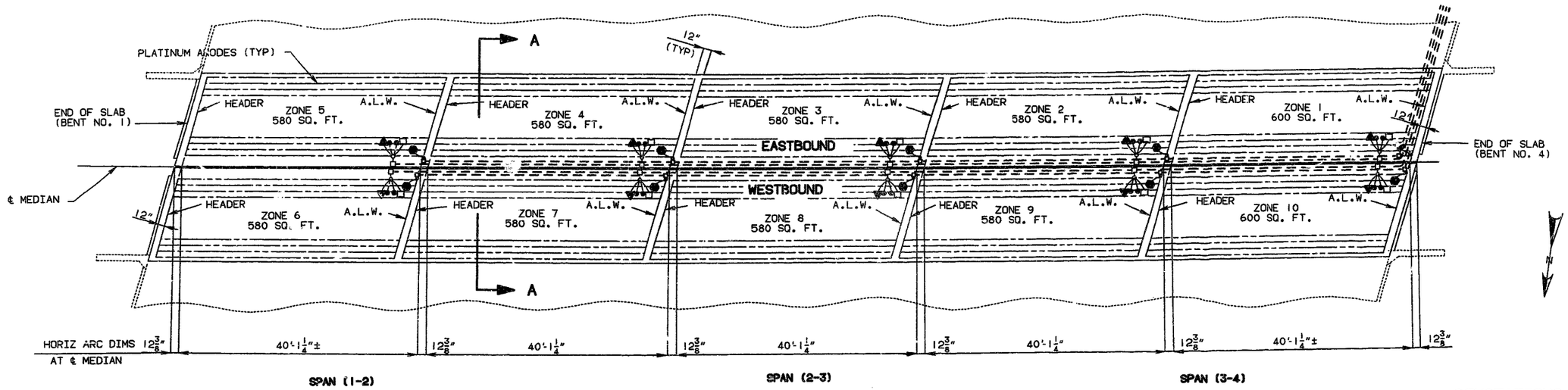


PART PLAN OF SLAB, AT NEW MEDIAN WIDENING, SHOWING PLATINUM CATHODIC PROTECTION SYSTEM (ALTERNATE "A")

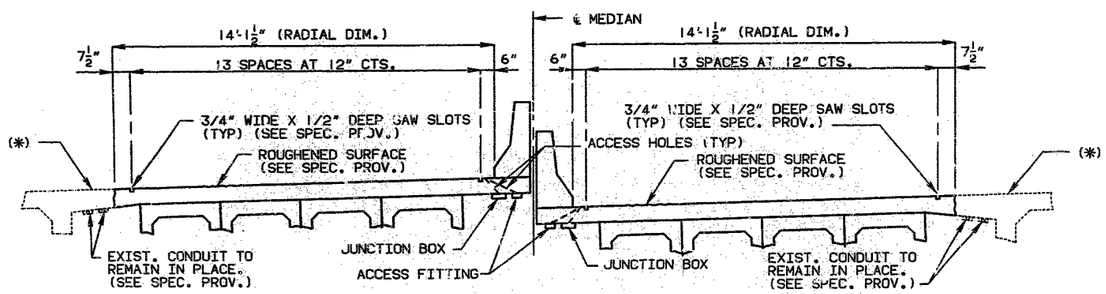


SECTION A-A

(*)-EXISTING CATHODIC PROTECTION SYSTEM TO REMAIN IN PLACE. (SEE SPEC. PROV.).

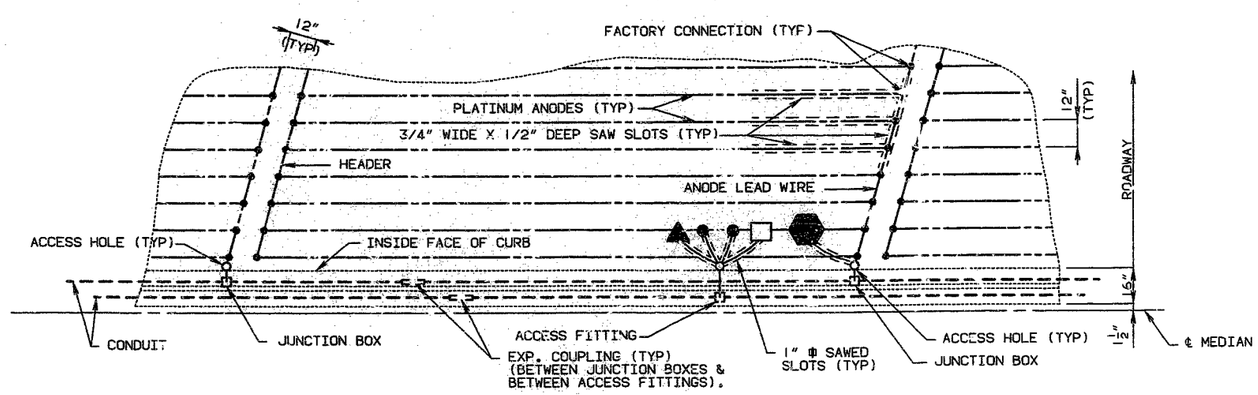


TYPICAL ZONE LAYOUT EXCEPT AS NOTED

NOTE: ANODES SHALL BE PLACED AS SHOWN WITH A MINIMUN TOLERANCE OF PLUS OR MINUS THREE INCHES.

NOTE:
DIMENSIONS ARE ALONG CENTERLINE OF MEDIAN (END TO END OF SLAB). ACTUAL ANODE LENGTHS FOR EACH ZONE ARE THE RESPONSIBILITY OF THE CONTRACTOR.
THE ANODE LEAD WIRE AND HEADER MAY BE AWG NO. 10 STRANDED COPPER WIRE WITH HMWPE INSULATION IN LIEU OF THE PLATINUM ANODE SHOWN.

NOTE:
FOR PART PLAN SHOWING LOCATION OF NEW RECTIFIER AND RELOCATION OF EXISTING RECTIFIER, SEE SHEET NO. 30.

## DENOTATIONS

- A.L.W. (ANODE LEAD WIRE) (PLATINUM ANODE)
- HEADER (PLATINUM ANODE)
- PLATINUM ANODE
- SYSTEM NEGATIVES CONNECTION
- REFERENCE CELL
- REBAR PROBE (CORROSOMETER)
- GROUNDS
- CONDUIT

NOTE: THE ANODE LEADS AND SYSTEM NEGATIVE RETURN LEADS SHALL BE ROUTED IN THE SAME CONDUIT.

THE REFERENCE CELL, REFERENCE CELL GROUND LEADS, REBAR PROBE AND PROBE GROUND LEADS SHALL BE ROUTED IN THE SAME CONDUIT.

REFERENCE CELL GROUND SHALL BE WELDED TO TOP REBAR WITHIN ONE FOOT OF REFERENCE CELL.

ALL ZONES ARE SIMILAR WITH VARYING WIDTHS (SEE SECTION THRU SLAB)

ANODE ASSEMBLY NUMBER MUST MATCH ZONE NUMBER.

REFERENCE CELLS ARE TO BE PLACED BETWEEN ANODES.

## ESTIMATED QUANTITIES FOR INFORMATION ONLY

| ITEM | UNIT | QUANTITY |
|---|---|---|
| PLATINUM ANODES | LIN.FT. | 5910 |
| REFERENCE CELLS | EACH | 10 |
| REBAR PROBES | EACH | 10 |
| THERMITE WELDS | EACH | 30 |
| CONDUIT 2" Ø PVC | LIN.FT. | 1070 ** |
| | | |

** QUANTITY DOES NOT INCLUDE CONDUIT FOR RELOCATING EXISTING RECTIFIER CONTROLLER.

NOTE: ANODE AND CONDUIT LENGTHS ARE APPROXIMATE. ACTUAL LENGTHS ARE THE RESPONSIBILITY OF THE CONTRACTOR.

DETAILED APR. 1992
CHECKED MAY 1992

NOTE: THIS DRAWING IS NOT TO SCALE. FOLLOW DIMENSIONS.



JACKSON COUNTY A-1240R1

235

| STATE | PROJ. NO. | SHEET NO. |
|---|---|---|
| MO. | | 41 |

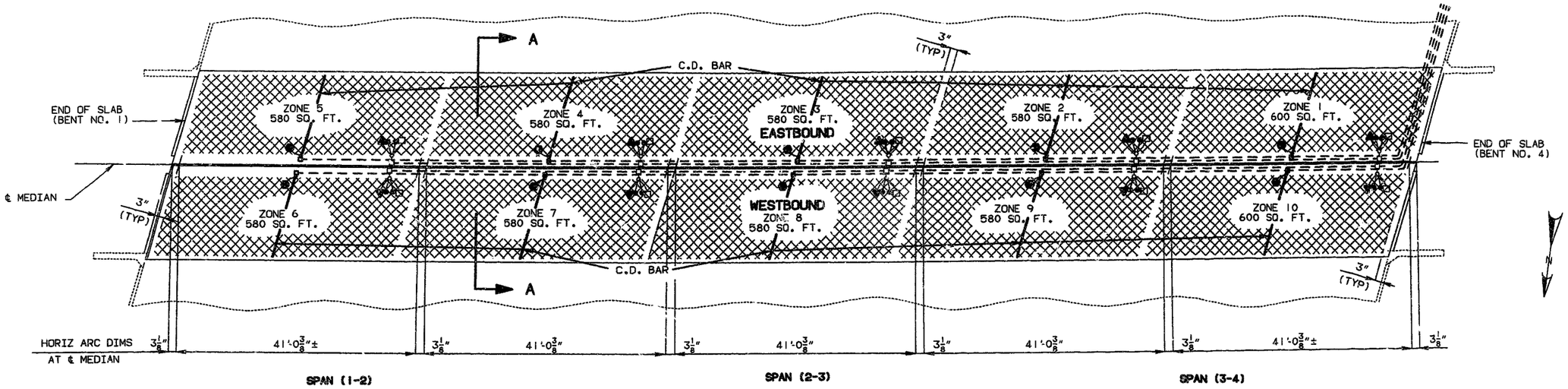


## PART PLAN OF SLAB, AT NEW MEDIAN WIDENING, SHOWING ELGARD ANODE MESH CATHODIC PROTECTION SYSTEM (ALTERNATE "B")

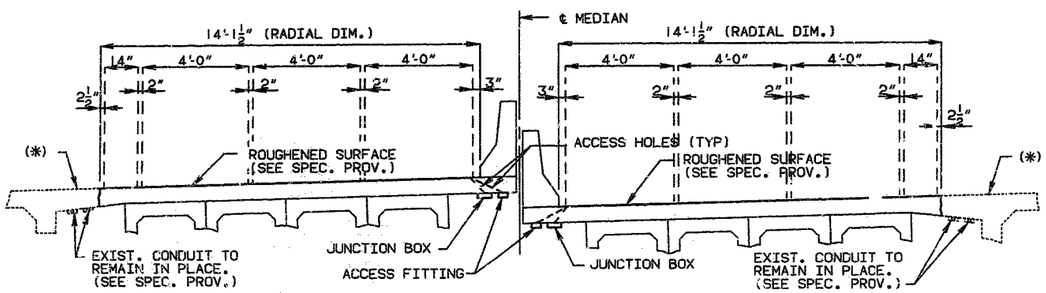


## SECTION A-A

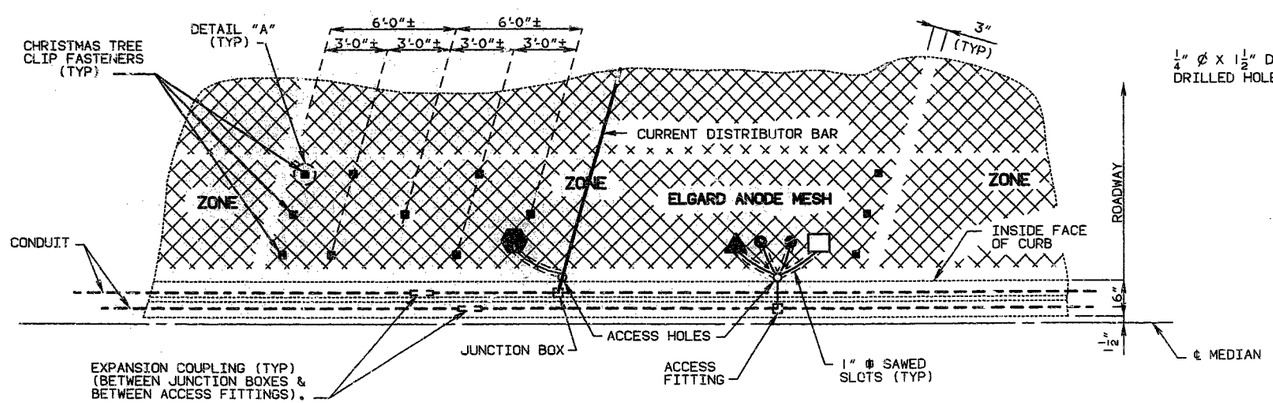


## TYPICAL ZONE LAYOUT EXCEPT AS NOTED

NOTE:
FOR PART PLAN SHOWING LOCATION OF NEW RECTIFIER AND RELOCATION OF EXISTING RECTIFIER, SEE SHEET NO. 30.

DIMENSIONS ARE ALONG CENTERLINE OF MEDIAN (END TO END OF SLAB). ACTUAL ANODE LENGTHS FOR EACH ZONE ARE THE RESPONSIBILITY OF THE CONTRACTOR.

(*)-EXISTING CATHODIC PROTECTION SYSTEM TO REMAIN IN PLACE. (SEE SPEC. PROV.)

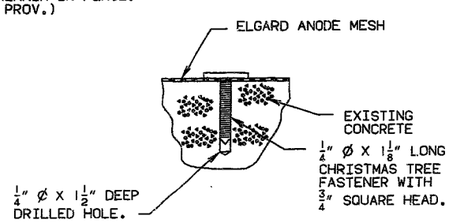


## DETAIL "A"
(CHRISTMAS TREE CLIP)

## DENOTATIONS

- ELGARD ANODE MESH
- SYSTEM NEGATIVES CONNECTION
- REFERENCE CELL
- REBAR PROBE (CORROSOMETER)
- GROUNDS
- CONDUIT

NOTE: THE ANODE LEADS AND SYSTEM NEGATIVE RETURN LEADS SHALL BE ROUTED IN THE SAME CONDUIT.

THE REFERENCE CELL, REFERENCE CELL GROUND LEADS, REBAR PROBE AND PROBE GROUND LEADS SHALL BE ROUTED IN THE SAME CONDUIT.

REFERENCE CELL GROUND SHALL BE WELDED TO TOP REBAR WITHIN ONE FOOT OF REFERENCE CELL.

ALL ZONES ARE SIMILAR WITH VARYING WIDTHS (SEE SECTION THRU SLAB)

ANODE ASSEMBLY NUMBER MUST MATCH ZONE NUMBER.

### ESTIMATED QUANTITIES FOR INFORMATION ONLY

| ITEM | UNIT | QUANTITY |
|---|---|---|
| ELGARD ANODE MESH (210) | SQ.FT. | 5400 |
| REFERENCE CELLS | EACH | 10 |
| REBAR PROBES | EACH | 10 |
| THERMITE WELDS | EACH | 30 |
| CONDUIT 2" Ø PVC | LIN.FT. | 1100 ** |
| | | |

** QUANTITY DOES NOT INCLUDE CONDUIT FOR RELOCATING EXISTING RECTIFIER CONTROLLER.

NOTE: ANODE AND CONDUIT LENGTHS ARE APPROXIMATE. ACTUAL LENGTHS ARE THE RESPONSIBILITY OF THE CONTRACTOR.

DETAILED APR. 1992
CHECKED MAY 1992

NOTE: THIS DRAWING IS NOT TO SCALE. FOLLOW DIMENSIONS.



JACKSON COUNTY A-1240R1

AK 36

| STATE | PROJ. NO. | SHEET NO. |
|---|---|---|
| MD. | | 42 |

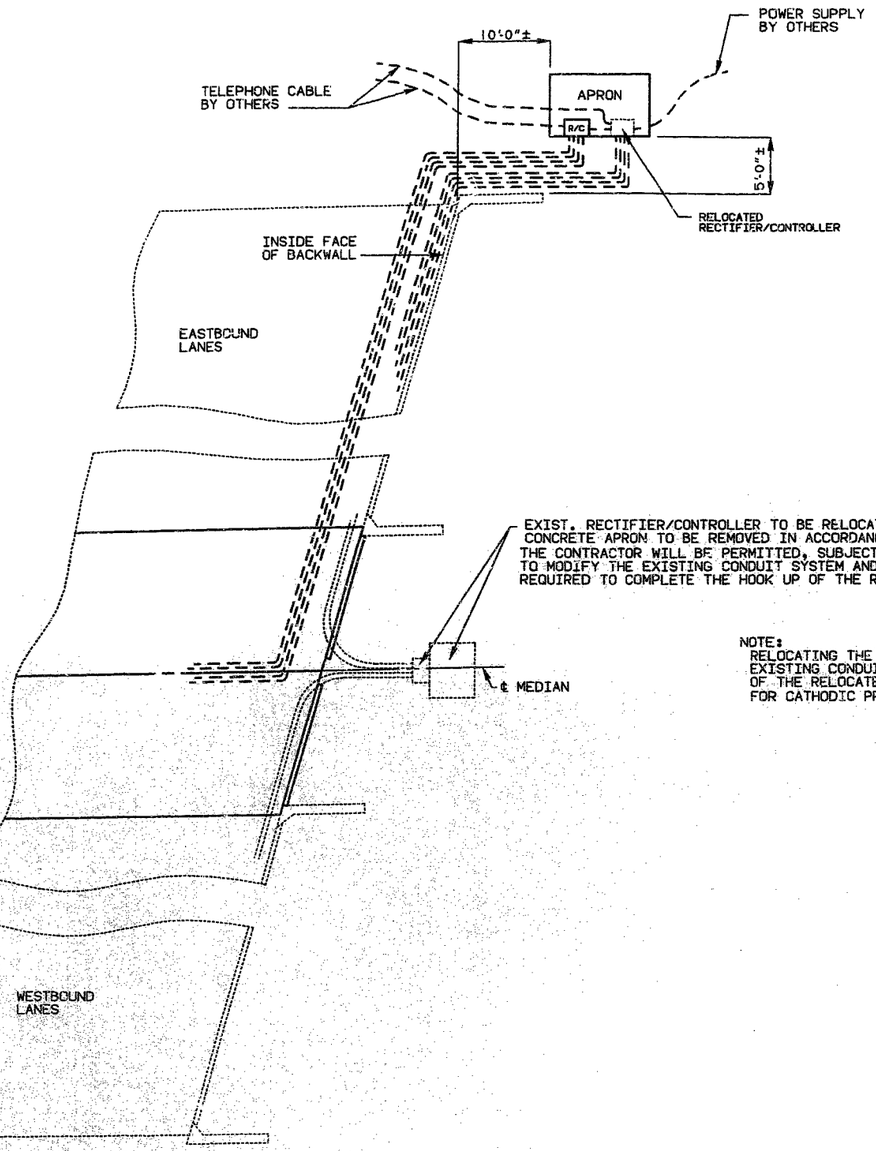


PART PLAN SHOWING LOCATION OF NEW RECTIFIER AND RELOCATION OF EXISTING RECTIFIER

NOTE:
RELOCATING THE EXISTING RECTIFIER, REMOVING THE EXISTING CONCRETE APRON, MODIFYING EXISTING CONDUIT AND/OR PROVIDING NEW CONDUIT AS REQUIRED TO COMPLETE THE HOOK-UP OF THE RELOCATED RECTIFIER SHALL BE PAID FOR AT THE CONTRACT UNIT PRICE, PER LUMP SUM, FOR CATHODIC PROTECTION SYSTEM.

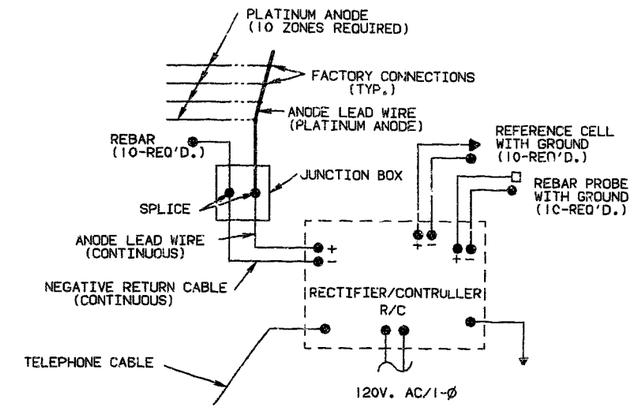


PARTIAL SCHEMATIC (ALTERNATE "A")

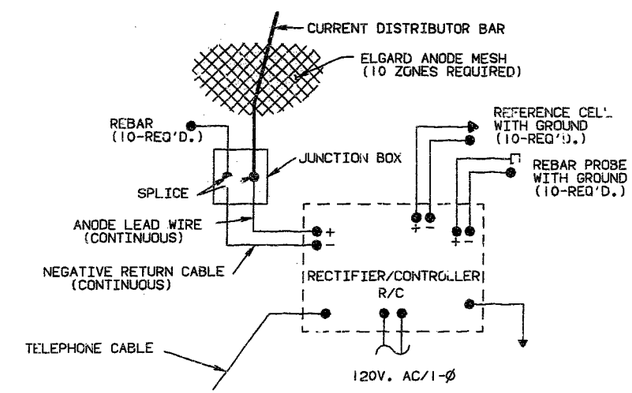


PARTIAL SCHEMATIC (ALTERNATE "B")

| STATE | PROJ. NO. | SHEET NO. |
|---|---|---|
| MO. | | 43 |

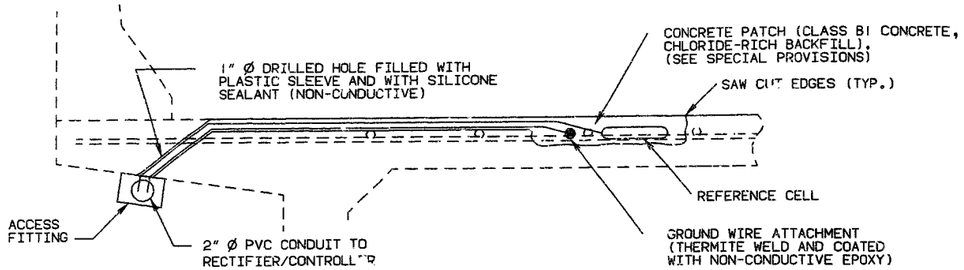


## REFERENCE CELL DETAILS

NOTE: THE REFERENCE CELL SHALL BE PLACED IN THE EXCAVATED AREA WITHIN 1" BUT NOT IN DIRECT CONTACT WITH TOP MAT REINFORCING STEEL.

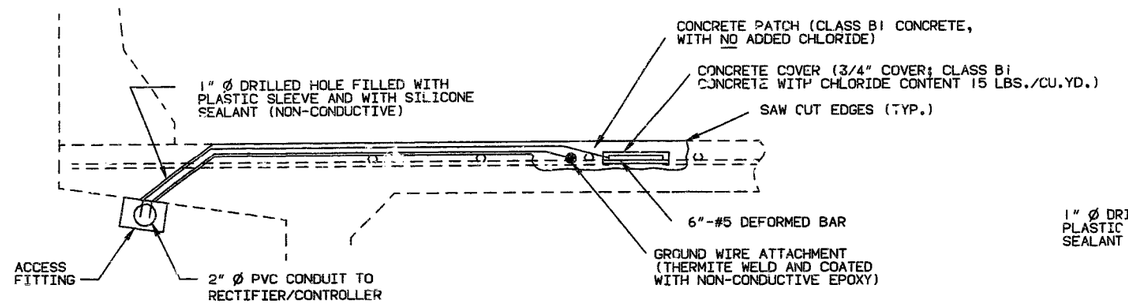


## REBAR PROBE DETAILS

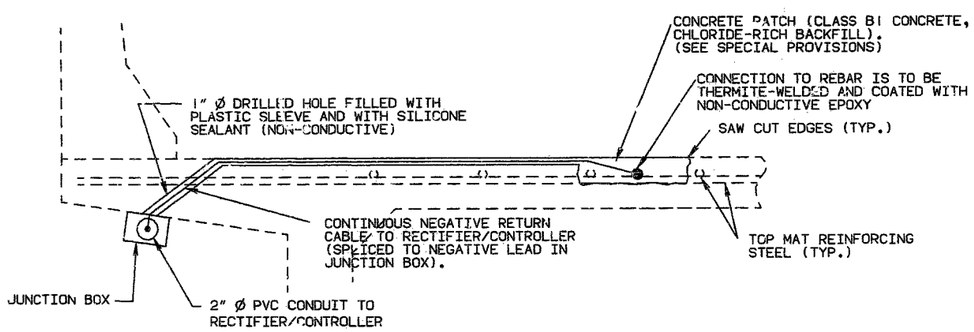


## SYSTEM NEGATIVE CONNECTION DETAILS

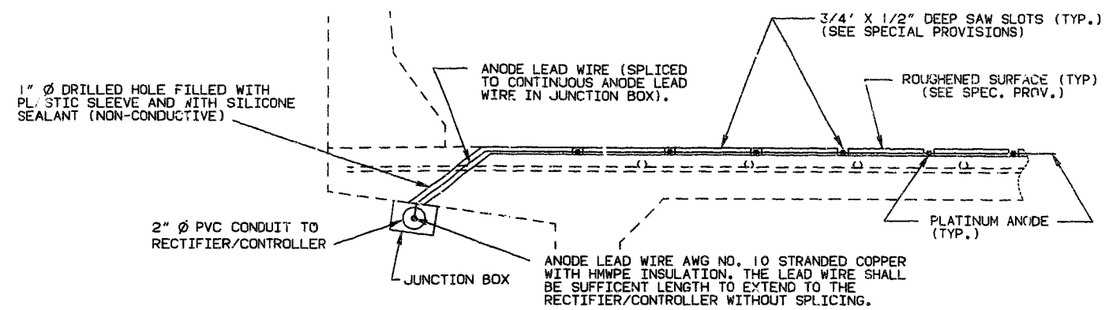


## PLATINUM ANODE TO ANODE LEAD WIRE DETAIL (ALTERNATE "A")

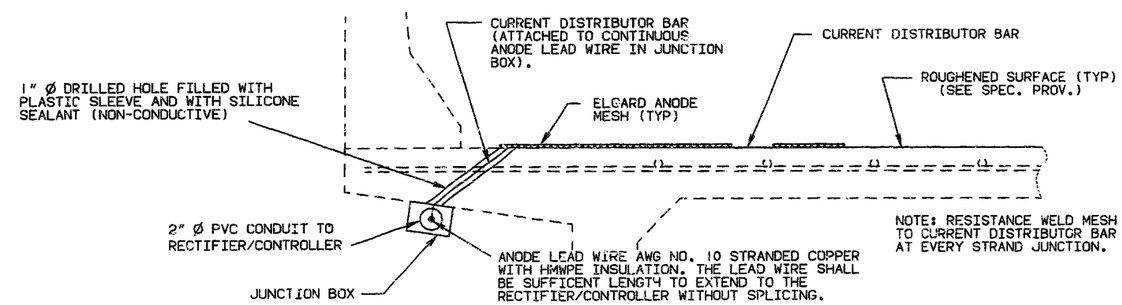


## DISTRIBUTOR BAR TO ANODE LEAD WIRE DETAIL (ALTERNATE "B")

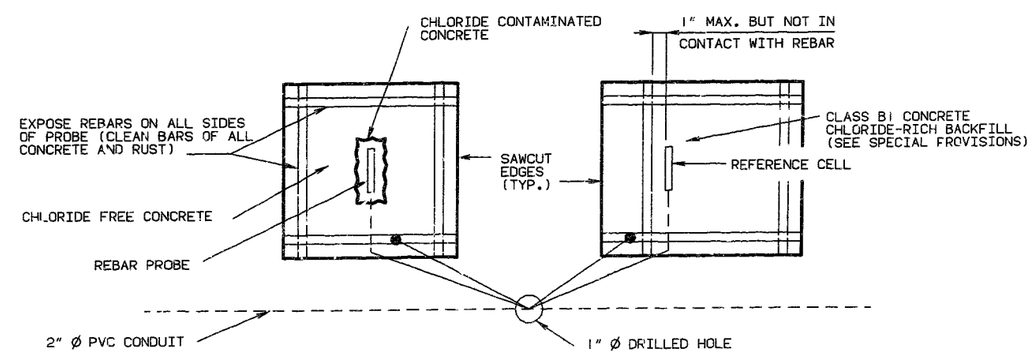


## PLAN OF REBAR PROBE AND REFERENCE CELL

NOTE:

CONDUIT SHALL BE SCHEDULE 40 HEAVY WALL PVC (POLYVINYL CHLORIDE PLASTIC). EACH SECTION OF CONDUIT SHALL BEAR THE UNDERWRITERS LABORATORIES, INC. (UL) LABEL.

CONDUIT SHALL BE SECURED TO CONCRETE WITH CLAMPS AT ABOUT 5'-0" CTS., (GALV./AASHTO M111).

WEEPHOLES SHALL BE PROVIDED AT APPROPRIATE LOCATIONS TO DRAIN ANY MOISTURE IN THE CONDUIT LINES.

EXPANSION COUPLINGS SHALL BE INSTALLED ON CONDUIT LINES BETWEEN ALL JUNCTION BOXES & ACCESS FITTINGS AS APPROVED BY THE ENGINEER.

THE LOCATION AND DIRECTION OF CONDUIT MAY BE SHIFTED TO MEET FIELD CONDITIONS AS DIRECTED BY THE ENGINEER.

ALL JUNCTION BOXES SHALL BE PVC MOLDED, SURFACE MOUNTED, SIZE 6" X 6" X 4" AND EQUAL TO CARLON ELECTRICAL CONSTRUCTION PRODUCTS OR TRIANGLE CONDUIT AND CABLE COMPANY, INC. THE TERMINATIONS SHALL BE PERMANENT OR SEPARABLE.

THE TERMINATIONS AND COVERS SHALL BE OF WATERTIGHT CONSTRUCTION.

ALL CONCRETE REMOVAL SHALL BE INITIATED BY SAW CUTTING THE FIRST $\frac{1}{2}$".

REVISED:

DETAILED APR. 1992
CHECKED MAY 1992

NOTE: THIS DRAWING IS NOT TO SCALE. FOLLOW DIMENSIONS.



JACKSON COUNTY

A-1240R1

| STATE | PROJ. NO. | SHEET NO. |
|---|---|---|
| MO. | | 44 |

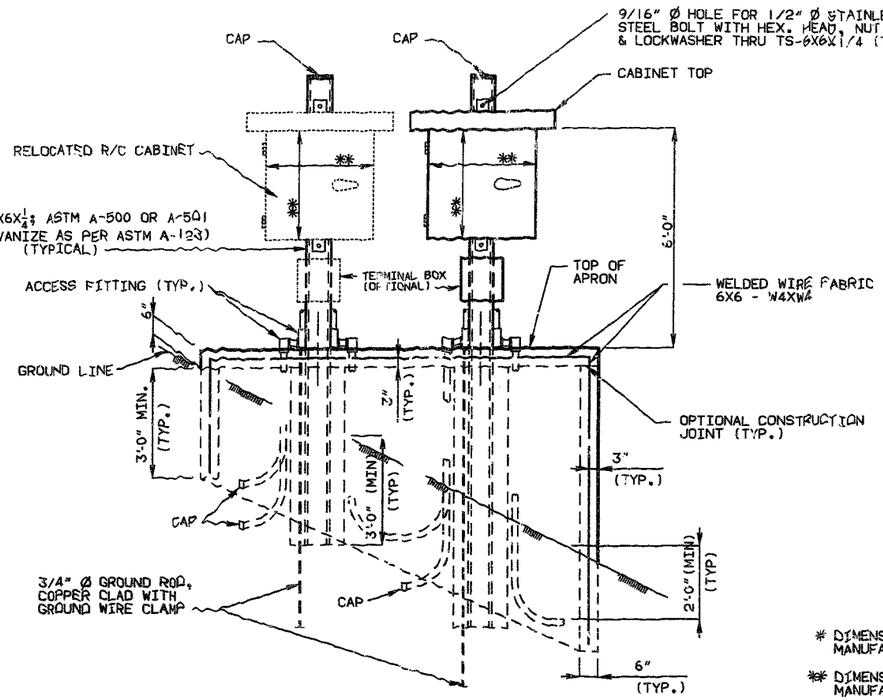


SECTION A-A

* DIMENSIONS ACCORDING TO MANUFACTURED CABINET.

** DIMENSIONS ACCORDING TO MANUFACTURER'S SPECIFICATIONS.

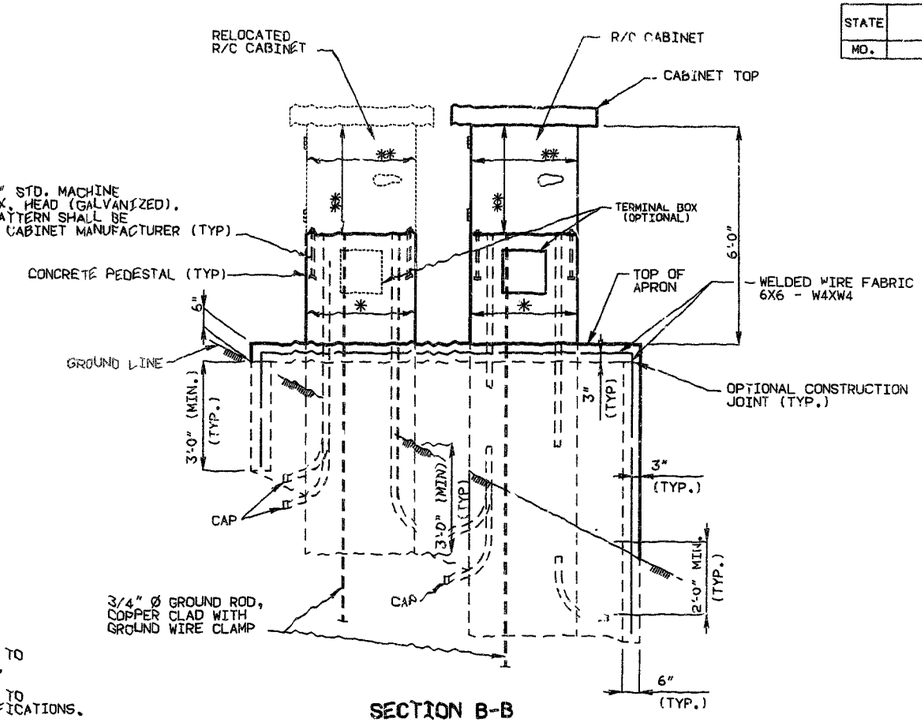


SECTION B-B

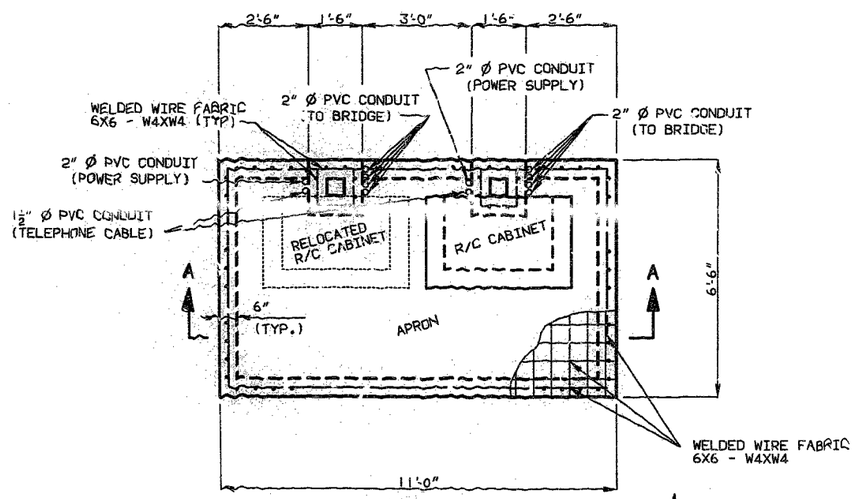


PLAN

(OPTION "A")

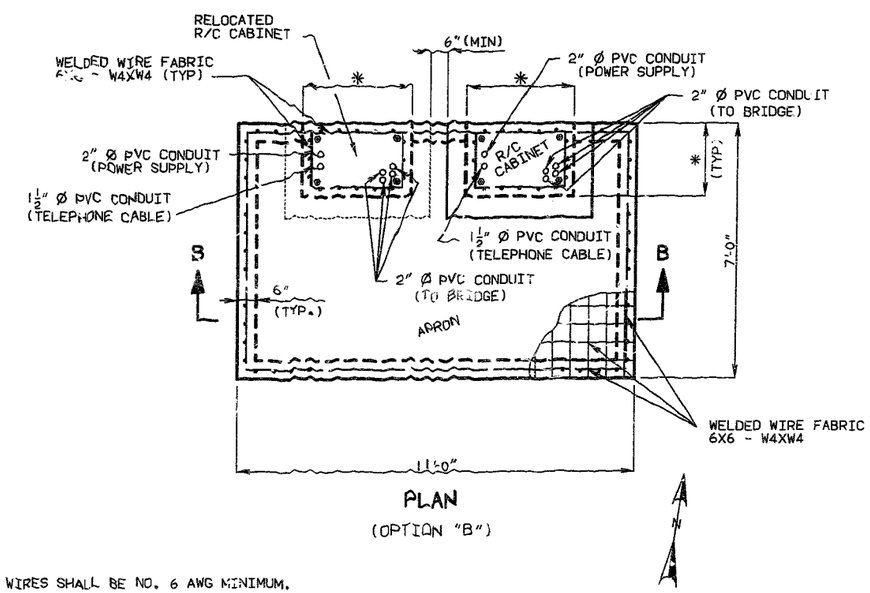


PLAN

(OPTION "B")

NOTE:

GROUND WIRES SHALL BE NO. 6 AWG MINIMUM.

THE 3/4" Ø GROUND RODS SHALL BE SUFFICIENT LENGTH TO EXTEND A MINIMUM OF 10'-0" BELOW BOTTOM OF CONCRETE PEDESTAL.

KNOCKOUTS OR DRILLED HOLES SHALL BE PROVIDED IN CABINETS FOR ALL CONDUITS. LOCATION OF THESE HOLES ARE THE RESPONSIBILITY OF THE CONTRACTOR AND CABINET MANUFACTURER.

A235

REVISED:

DETAILED APR. 1991
CHECKED MAY 1991

NOTE: THIS DRAWING IS NOT TO SCALE. FOLLOW DIMENSIONS.



JACKSON COUNTY

A-1240R1

| STATE | PROJ. NO. | SHEET NO. |
|---|---|---|
| MO. | | 45 |

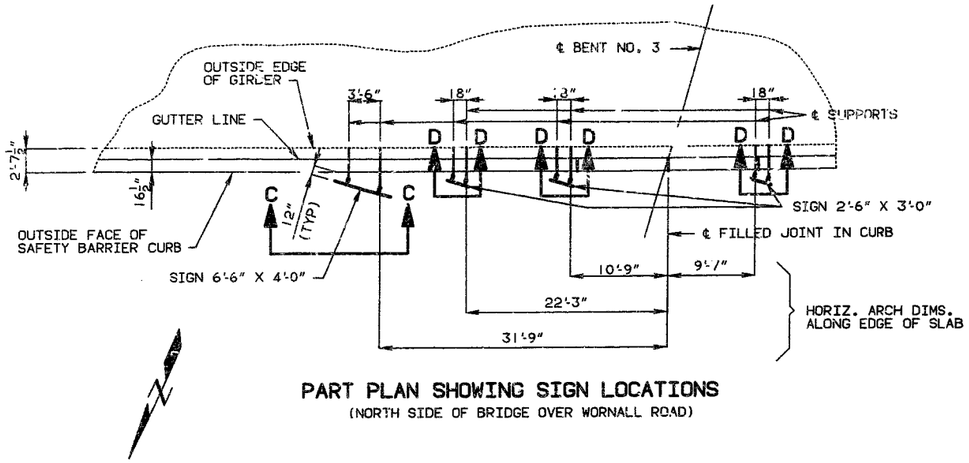


PART PLAN SHOWING SIGN LOCATIONS
(NORTH SIDE OF BRIDGE OVER WORNALL ROAD)

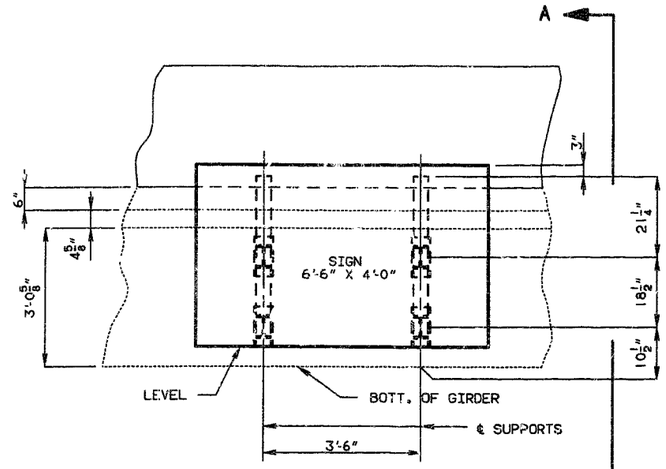


PART ELEVATION C-C

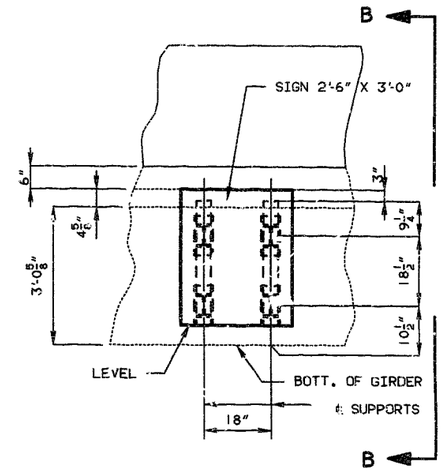


PART ELEVATION D-D

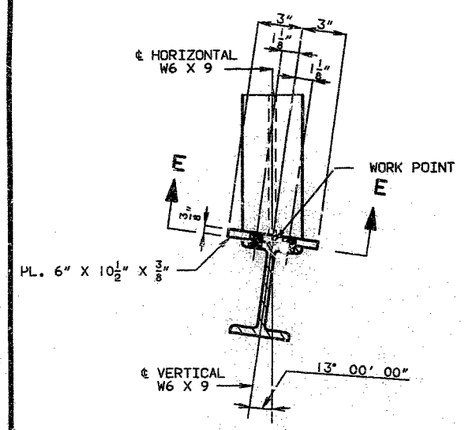


DETAIL "D"

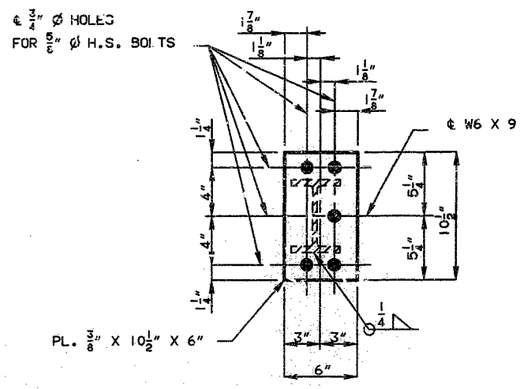


SECTION E-E

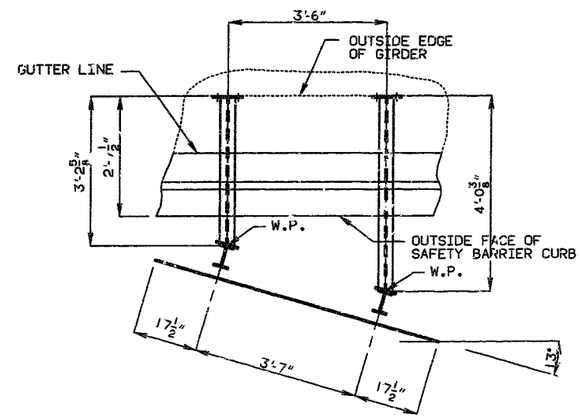


PART PLAN SHOWING DIMENSIONS AT 6'-6" X 4'-0" SIGN

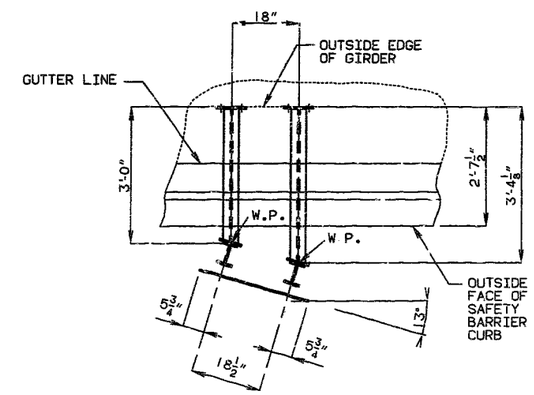


PART PLAN SHOWING DIMENSIONS AT 2'-6" X 3'-0" SIGNS

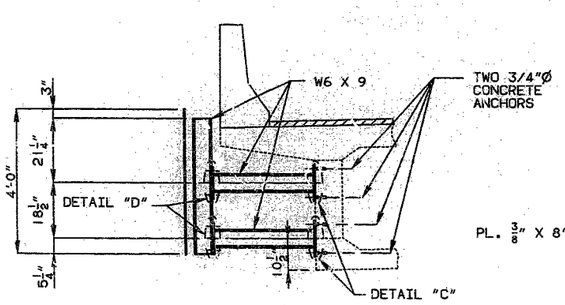


SECTION A-A

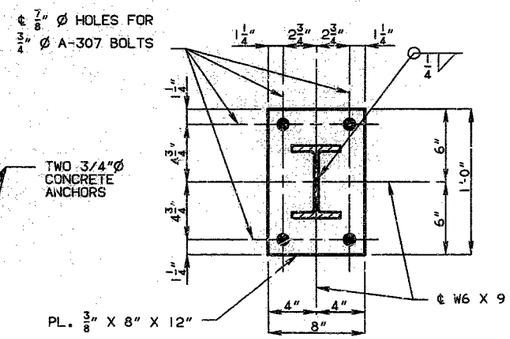


DETAIL "C"

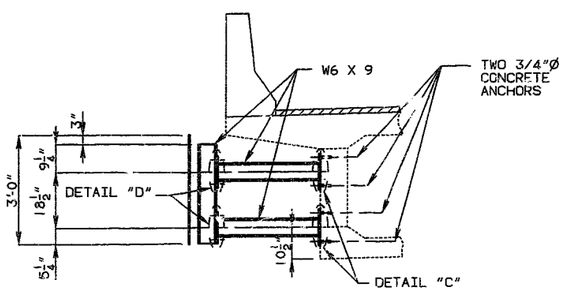


SECTION B-B

GENERAL NOTES:

CENTER AND LEVEL SIGNS ON BRACKET.

ALL BOLTS, NUTS AND WASHERS SHALL BE GALVANIZED.

ALL STRUCTURAL STEEL SHALL BE A.S.T.M. A36, GALVANIZED.

OUTLINE OF OLD WORK IS INDICATED BY LIGHT DASHED LINES. HEAVY LINES INDICATE NEW WORK.

CONCRETE ANCHORS SHALL BE THE NON-DRILLING EXPANSION TYPE. THEY SHALL HAVE A CERTIFIED CONCRETE PULLOUT STRENGTH (ULTIMATE LOAD) OF AT LEAST 12,100 POUNDS IN 4000 PSI CONCRETE. THE HOLE SHALL BE PRE-DRILLED WITH A CONVENTIONAL CARBIDE MASONRY BIT.

THE COST OF FURNISHING AND ERECTING THE SIGN SUPPORTS, INCLUDING THE CONCRETE ANCHORS COMPLETE-IN-PLACE, SHALL BE PAID FOR AS FABRICATED SIGN SUPPORT BRACKETS, LUMP SUM.

DETAILED JUNE 1992
CHECKED JUNE 1992

NOTE: THIS DRAWING IS NOT TO SCALE. FOLLOW DIMENSIONS.



JACKSON COUNTY

A-1240R1

RB 40

| STATE | PROJ. NO. | SHEET NO. |
|---|---|---|
| MD. | | 46 |

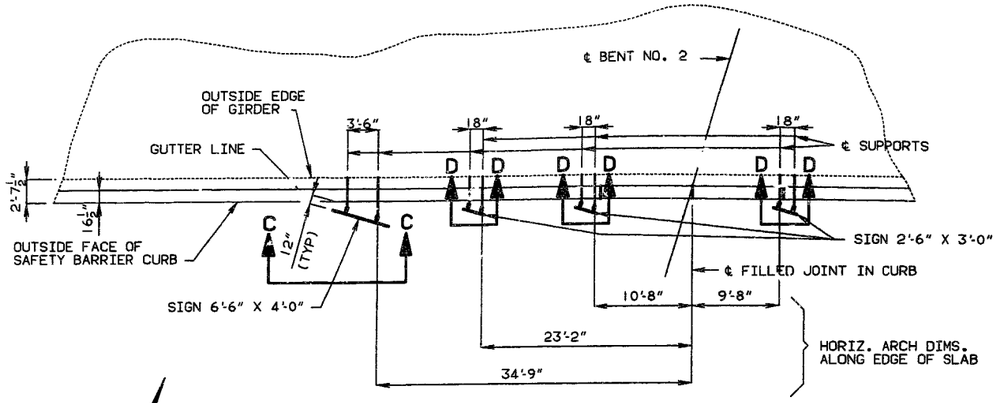


PART PLAN SHOWING SIGN LOCATIONS
(SOUTH SIDE OF BRIDGE OVER WORNALL ROAD)

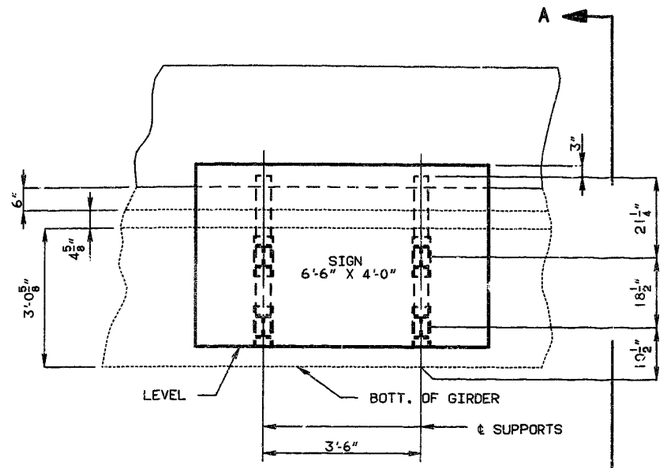


PART ELEVATION C-C

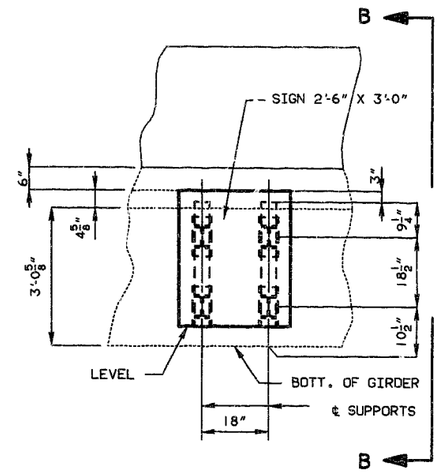


PART ELEVATION D-D

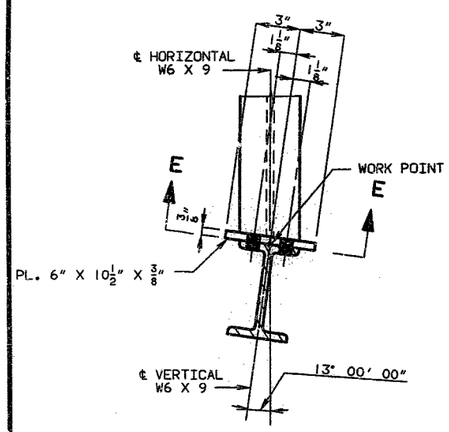


DETAIL "D"

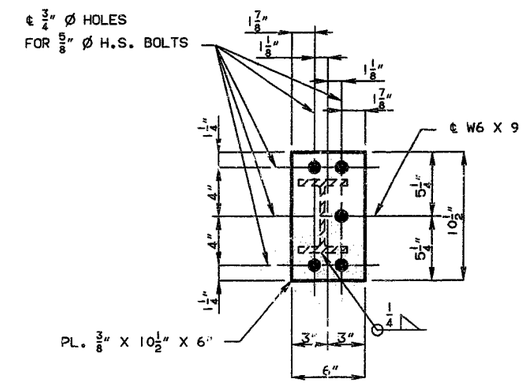


SECTION E-E

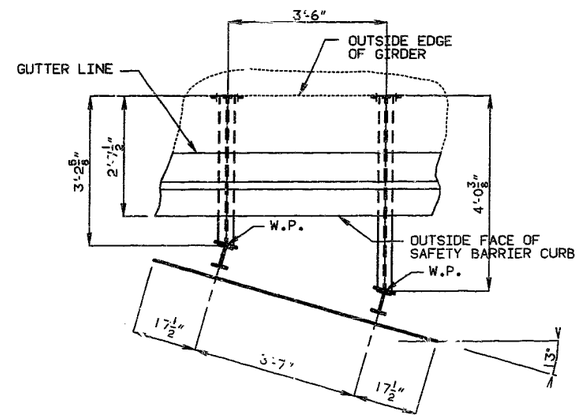


PART PLAN SHOWING DIMENSIONS AT 6'-6" X 4'-0" SIGN

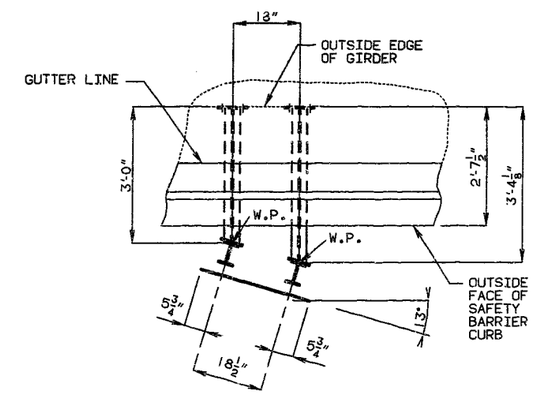


PART PLAN SHOWING DIMENSIONS AT 2'-6" X 3'-0" SIGNS

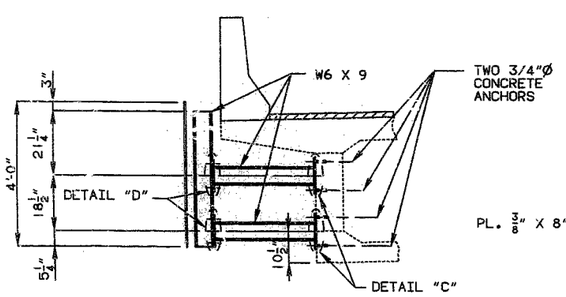


SECTION A-A

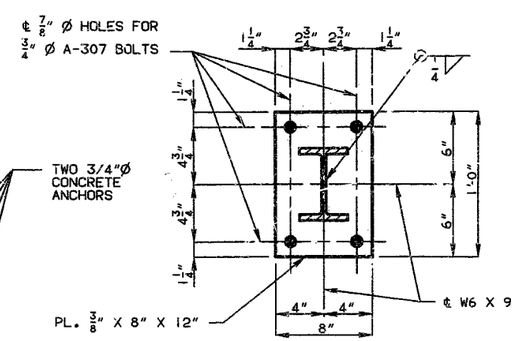


DETAIL "C"

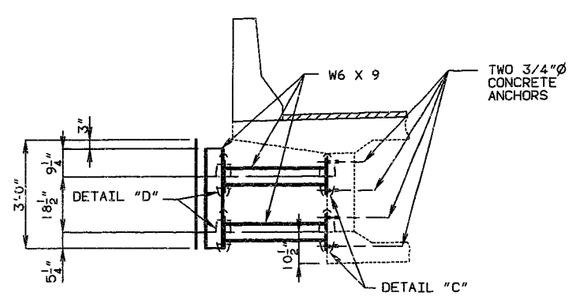


SECTION B-B

DETAILED JUNE 1992
CHECKED JUNE 1992

NOTE: THIS DRAWING IS NOT TO SCALE. FOLLOW DIMENSIONS.



JACKSON COUNTY

A-1240R1

| STATE | PROJ. NO. | SHEET NO. |
|---|---|---|
| MO. | | 47 |

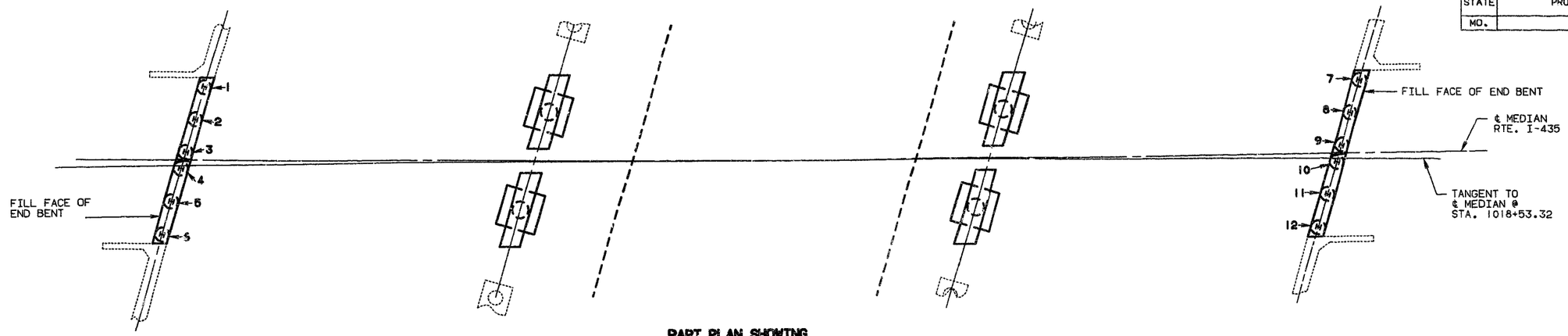


**PART PLAN SHOWING PILE NUMBERING FOR RECORDING "AS BUILT PILE" DATA**

## "AS BUILT PILE" DATA

| PILE NO. | LENGTH IN PLACE (FT.) | COMPUTED BEARING (TONS) | REMARKS |
|---|---|---|---|
| | | | END BENT NO. 1 |
| 1 | | | |
| 2 | | | |
| 3 | | | |
| 4 | | | |
| 5 | | | |
| 6 | | | |
| | | | END BENT NO. 4 |
| 7 | | | |
| 8 | | | |
| 9 | | | |
| 10 | | | |
| 11 | | | |
| 12 | | | |

## "AS BUILT PILE" DATA

| PILE NO. | LENGTH IN PLACE (FT.) | COMPUTED BEARING (TONS) | REMARKS |
|---|---|---|---|
| | | | |

## "AS BUILT PILE" DATA

| PILE NO. | LENGTH IN PLACE (FT.) | COMPUTED BEARING (TONS) | REMARKS |
|---|---|---|---|
| | | | |

NOTE: INDICATE IN REMARK COLUMN:
A.) IF PILING WERE DRIVEN TO PRACTICAL REFUSAL.
B.) PILE BATTER IF OTHER THAN SHOWN ON BENT DETAIL SHEET.
C.) TYPE OF PILING USED.

*NOTE: THIS SHEET TO BE COMPLETED BY MHTD CONSTRUCTION PERSONNEL.*

MISC. PILES IN PLA, A
PILES IN PLACE
MAY 1992
REVISED:

DETAILED MAY 1992
CHECKED MAY 1992

NOTE: THIS DRAWING IS NOT TO SCALE. FOLLOW DIMENSIONS.



JACKSON COUNTY A-1240R1

# MISSOURI HIGHWAY AND TRANSPORTATION COMMISSION

| STATE | PROJ. NO. | SHEET NO. |
|---|---|---|
| MO. | F.A.I.-435-1(254) | 13 |
| SEC. 31,32 | TWP. 48N RGE. 33W | |

FINAL PLAN

**WIDEN MEDIAN RT. AND LT. - U.I.P. EXISTING TWIN (62.03', 80.04', 62.04') CONT. CONC. BOX GIRDER SPANS**

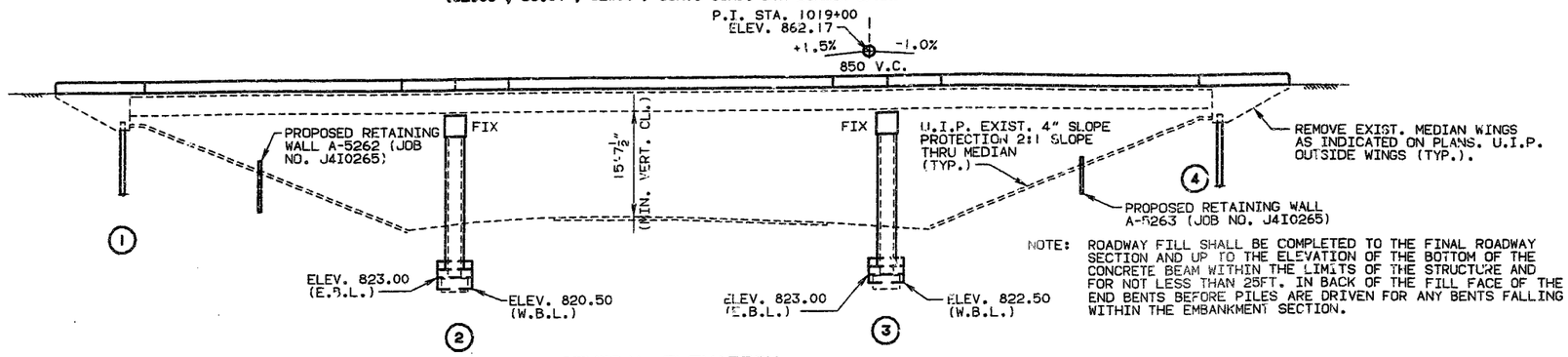


NOTE: ROADWAY FILL SHALL BE COMPLETED TO THE FINAL ROADWAY SECTION AND UP TO THE ELEVATION OF THE BOTTOM OF THE CONCRETE BEAM WITHIN THE LIMITS OF THE STRUCTURE AND FOR NOT LESS THAN 25FT. IN BACK OF THE FILL FACE OF THE END BENTS BEFORE PILES ARE DRIVEN FOR ANY BENTS FALLING WITHIN THE EMBANKMENT SECTION.

## GENERAL ELEVATION

| CURVE DATA (RTE. I-435) |
|---|
| P.I. STA. 1014+50.4 |
| Δ = 25°-14' LT. |
| D = 1° |
| T = 1282.48' |
| L = 2523.33' |
| R = 5729.65' |
| S.E. = .025 FT./FT. |
| W = 0 |

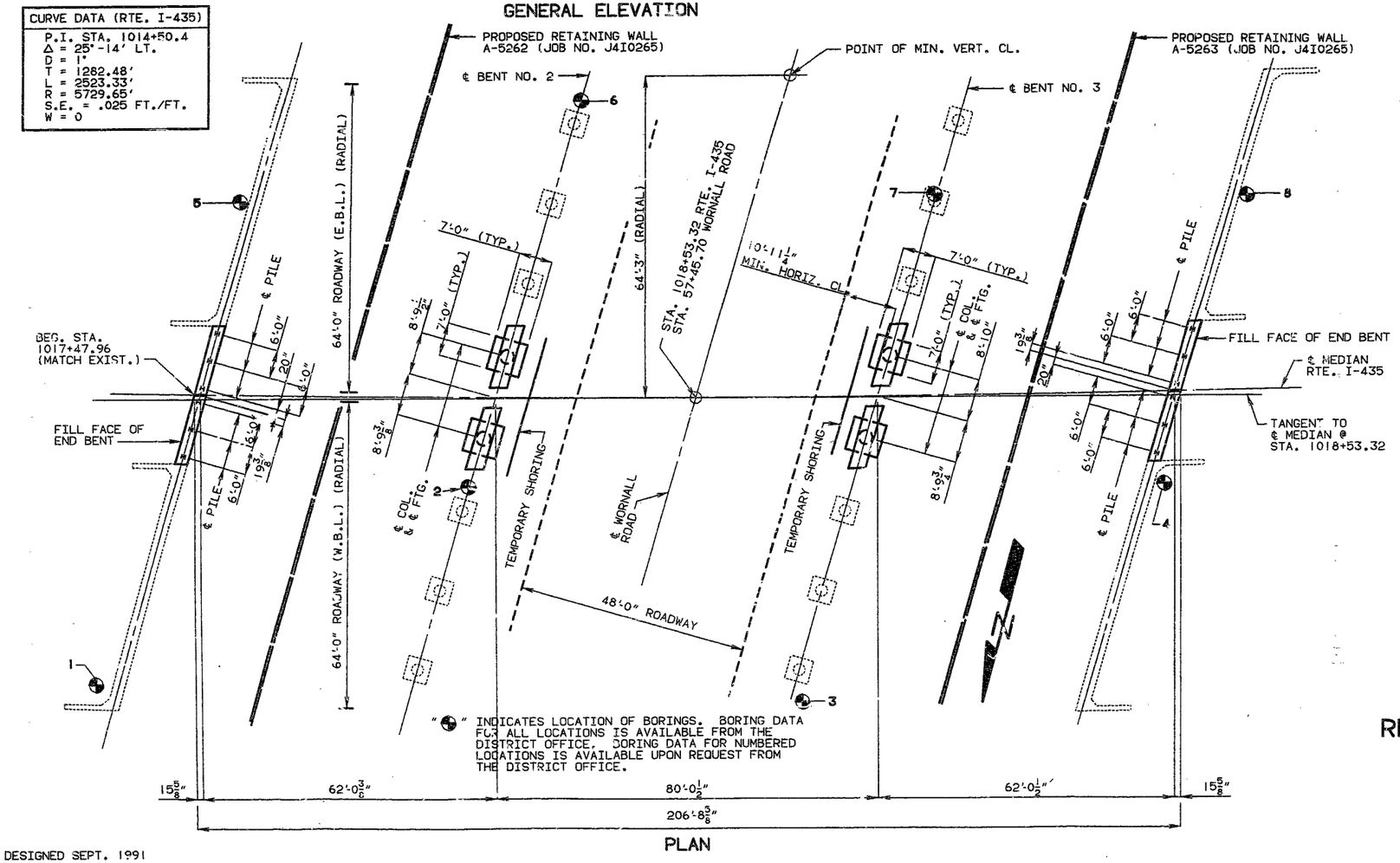


"⊕" INDICATES LOCATION OF BORINGS. BORING DATA FOR ALL LOCATIONS IS AVAILABLE FROM THE DISTRICT OFFICE. BORING DATA FOR NUMBERED LOCATIONS IS AVAILABLE UPON REQUEST FROM THE DISTRICT OFFICE.

PLAN

## GENERAL NOTES:

DESIGN SPECIFICATIONS: A.A.S.H.T.O.-1989 AND INTERIM 1990. LOAD FACTOR DESIGN. A.A.S.H.T.O.-1983 GUIDE SPECIFICATIONS FOR SEISMIC DESIGN. PERFORMANCE CATEGORY A.

DESIGN LOADING:

HS20-44 35# FUTURE WEARING SURFACE
MODIFIED 24,000# TANDEM AXLE
EARTH 120#/CU. FT., EQUIVALENT FLUID PRESSURE 45#/CU. FT.

SUPERSTRUCTURE: SIMPLY-SUPPORTED, NON-COMPOSITE FOR DEAD LOAD. CONTINUOUS COMPOSITE FOR LIVE LOAD.

DESIGN UNIT STRESSES:

CLASS B CONCRETE (SUBSTRUCTURE) F'C=3,000 PSI

CLASS B2 CONCRETE (SUPERSTRUCTURE, EXCEPT PRESTRESSED GDRS. AND SAFETY BARRIER CURB) F'C=4,000 PSI

CLASS B1 CONCRETE (SAFETY BARRIER CURB) F'C=4,000 PSI

REINFORCING STEEL (GRADE 60) FY=60,000 PSI

STEEL PILE FB=9,000 PSI

FOR PRESTRESSED GIRDER STRESSES, SEE SHT. NOS. 11, 12 AND 13.

NEOPRENE BEARING PADS: BEARINGS SHALL BE 60 DUROMETER NEOPRENE PADS. THE NEOPRENE PAD SHALL BE BONDED TO THE BEARING SEAT WITH AN EPOXY ADHESIVE AS APPROVED BY THE BEARING MANUFACTURER FOR BONDING NEOPRENE TO CONCRETE.

JOINT FILLER: ALL JOINT FILLER SHALL MEET THE REQUIREMENTS OF STD. SPEC. 1057.2.4, EXCEPT AS NOTED.

REINFORCING STEEL: MINIMUM CLEARANCE TO REINFORCING STEEL SHALL BE 1 1/2", UNLESS OTHERWISE SHOWN.

BARS BONDED IN OLD CONCRETE NOT REMOVED SHALL BE CLEANLY STRIPPED AND EMBEDDED INTO NEW CONCRETE WHERE POSSIBLE. IF LENGTH IS AVAILABLE, OLD BARS SHALL EXTEND INTO NEW CONCRETE AT LEAST 30 DIAMETERS FOR DEFORMED BARS, UNLESS OTHERWISE NOTED.

CONSTRUCTION CLEARANCE: A MINIMUM VERTICAL CLEARANCE OF 14'-9" FROM CROWN OF EXISTING LANES AND A MINIMUM LATERAL CLEARANCE OF 28'-0" CENTERED ON EXISTING LANES SHALL BE MAINTAINED DURING CONSTRUCTION.

TRAFFIC MAINTAINED: TRAFFIC OVER STRUCTURE TO BE MAINTAINED DURING CONSTRUCTION. (SEE ROADWAY PLANS)

EXISTING STRUCTURE: OUTLINE OF OLD WORK IS INDICATED BY LIGHT DASHED LINES. HEAVY LINES INDICATE NEW WORK.

CONTRACTOR SHALL VERIFY ALL DIMENSIONS IN FIELD BEFORE ORDERING NEW MATERIALS.

RESIN ANCHOR SYSTEMS: THE CONTRACTOR SHALL USE ONE OF THE RESIN ANCHOR SYSTEMS LISTED IN THE SPECIAL PROVISIONS. THESE ANCHOR SYSTEMS SHALL BE INSTALLED ACCORDING TO THE MANUFACTURER'S SPECIFICATIONS EXCEPT AS MODIFIED BY THE JOB SPECIAL PROVISIONS AND THAT A PLAIN, #5, GRADE 60 REINFORCING BAR 2'-3" LONG SHALL BE SUBSTITUTED FOR THE THREADED ROD STUD.

IN ORDER TO MAINTAIN GRADE AND A MINIMUM THICKNESS OF OVERLAY AS SHOWN ON PLANS IT MAY BE NECESSARY TO USE ADDITIONAL QUANTITIES OF OVERLAY AT VARIOUS LOCATIONS THROUGHOUT THE STRUCTURE. NO PAYMENT WILL BE ALLOWED FOR ADDITIONAL LABOR, MATERIALS OR EQUIPMENT FOR VARIATIONS IN THICKNESS OF OVERLAY.

COST OF FURNISHING AND INSTALLING THE ANCHOR SYSTEM COMPLETE IN PLACE SHALL BE INCLUDED IN THE PRICE BID PER LINEAR FOOT OF SAFETY BARRIER CURB.

ALL BENTS ARE PARALLEL.

ROADWAY SURFACING ADJACENT TO BRIDGE ENDS TO MATCH BRIDGE OVERLAY (ROADWAY ITEM).

B.M. ELEV. 861.53 A-1240 (E.B.L.) I-435 @ STA. 1017+55± @ 15' ± LT/O ℄ MED. ⊡ IN END N. WING BT. #1 LT. LANE

# REPAIRS TO: BRIDGE OVER WORNALL ROAD

**STATE ROAD INTERSTATE ROUTE 435**

**ABOUT 5 MILES NORTH OF MARTIN CITY**

**PROJECT NO.** F.A.I.-435-1(254) **STA.** 1017+47.96

**JOB NO.** J4I0080T8 **RTE.** I-435

**JACKSON COUNTY**

DATE: 8/10/92

| STD. 611.60 |
|---|
| STD. 617.00 |
| STD. 706.35 |
| A-1240R1 |

DESIGNED SEPT. 1991
DETAILED SEPT. 1991
CHECKED MAY 1992

NOTE: THIS DRAWING IS NOT TO SCALE. FOLLOW DIMENSIONS.

SHEET NO. 1A OF 35.

46 43

| STATE | PROJ. NO. | SHEET NO. |
|---|---|---|
| MO. | J4108078 | 14 |

FINAL PLANS

NOTE: THE REQUIRED SHIM PLATE SHALL BE PLACED BETWEEN LAYERS OF ELASTOMER AND MOLDED TOGETHER TO FORM AN INTERGRAL UNIT.

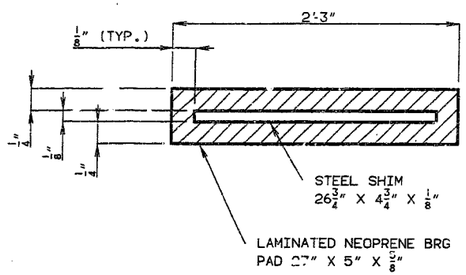


DETAILS OF LAMINATED NEOPRENE BEARING PAD

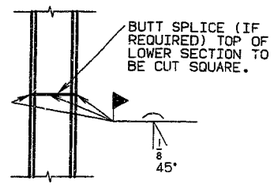


DETAIL OF STEEL PILE SPLICE

## FINAL QUANTITIES

| | ITEM | | SUBSTR. | SUPERSTR. | TOTAL |
|---|---|---|---|---|---|
| | CURB REMOVAL (BRIDGES) | LIN. FT. | | 899 | 899 |
| | PARTIAL REMOVAL OF SUBSTR. CONCRETE | LUMP SUM | | | 1 |
| | PARTIAL REMOVAL OF EXIST. BRIDGE DECK | SQ. FT. | | 414 | 414 |
| | CLASS I EXCAVATION | CU. YD. | 237 | | 237 |
| | TEMPORARY SHORING | LUMP SUM | | | 1 |
| | STRUCTURAL STEEL PILES (10") | LIN. FT. | 366 | | 366 |
| | CLASS B CONCRETE (SUBSTR.) | CU. YD. | 94.2 | | 94.2 |
| | CLASS B2 CONC.(SUPSTR.) CONC. ON BOX GDR. | CU. YD. | | 191.8 | 191.8 |
| | SAFETY BARRIER CURB | LIN. FT. | | 414 | 414 |
| * | 16-1\2" SAFETY BARRIER CURB | LIN. FT. | | 450 | 450 |
| | PLAIN NEOPRENE BEARING PADS | EACH | | 16 | 16 |
| | LAMINATED NEOPRENE BEARING PADS | EACH | | 32 | 32 |
| | SLAB EDGE REPAIR (BRIDGES) | LIN. FT. | | 85 | 85 |
| | SUPERSTRUCTURE REPAIR (UNFORMED) | SQ. FT. | | 0 | 0 |
| | LATEX CONC. WEARING SURFACE | SQ. YD. | | 666 | 666 |
| | P/S CONC. BOX GDR. (62' SPAN) | EACH | | 16 | 16 |
| | P/S CONC. BOX GDR. (80' SPAN) | EACH | | 8 | 8 |
| | REINFORCING STEEL (BRIDGES) | POUND | 11,980 | 37,740 | 49,720 |
| | CATHODIC PROTECTION SYSTEM | LUMP SUM | | | 1 |
| | SLAB DRAINS | EACH | | 10 | 10 |
| | FABRICATED SIGN SUPPORT BRACKETS (STEEL) | LUMP SUM | | | 1 |
| | CONTINGENT ITEMS TEST HOLES | | 16 | | 16 |
| | 502.03 REPAIR EXISTING CABLE CAT PROTECT. | | 1 | | 1 |

## PILE AND FOOTING DATA

| | BENT NUMBER | 1 EBL | 1 WBL | 2 EBL | 2 WBL | 3 EBL | 3 WBL | 4 EBL | 4 WBL |
|---|---|---|---|---|---|---|---|---|---|
| BEARING PILE | PILE TYPE AND SIZE | HP10X42 | HP10X42 | | | | | HP10X42 | HP10X42 |
| | NUMBER | 3 | 3 | | | | | 3 | 3 |
| | APPROXIMATE LENGTH (FT.) | 31 | 31 | | | | | 31 | 31 |
| | DESIGN BEARING (TONS) | 49 | 49 | | | | | 49 | 49 |
| | HAMMER ENERGY REQ'D. (FT/LBS) | 11,000 | 11,000 | | | | | 11,000 | 11,000 |
| SPREAD FOOTINGS | FOUNDATION MATERIAL | | | ROCK | ROCK | ROCK | ROCK | | |
| | DESIGN BEARING TONS/SQ. FT. | | | 10.6 | 10.6 | 10.6 | 10.6 | | |

NOTE: MINIMUM ENERGY REQUIREMENT OF HAMMER BASED ON PLAN LENGTH AND DESIGN BEARING VALUE OF PILES. ALL PILE SHALL BE DRIVEN TO PRACTICAL REFUSAL.

NOTE: ALL CONCRETE ABOVE THE CONSTRUCTION JOINT IN END BENTS IS INCLUDED WITH SUPERSTRUCTURE QUANTITIES.

ALL REINFORCEMENT IN THE END BENTS IS INCLUDED WITH SUPERSTRUCTURE QUANTITIES.

THE COST OF FURNISHING, FABRICATING AND INSTALLING NEOPRENE BEARING PADS, COMPLETE-IN-PLACE, WILL BE PAID FOR AT THE CONTRACT UNIT PRICE FOR PLAIN AND LAMINATED NEOPRENE BEARING PADS PER EACH.

* SAFETY BARRIER CURB SHALL BE CAST-IN-PLACE OR SLIP-FORM OPTION.

COST OF FURNISHING AND INSTALLING RESIN ANCHOR SYSTEMS, COMPLETE IN PLACE, SHALL BE INCLUDED IN THE UNIT PRICE BID FOR CONCRETE.

47444

DETAILED SEPT. 1991
CHECKED MAY 1992

NOTE: THIS DRAWING IS NOT TO SCALE. FOLLOW DIMENSIONS.



JACKSON COUNTY A-1240R1

| STATE | PROJ. NO. | SHEET NO. |
|---|---|---|
| MO. | J410807B | 17 |

FINAL PLANS

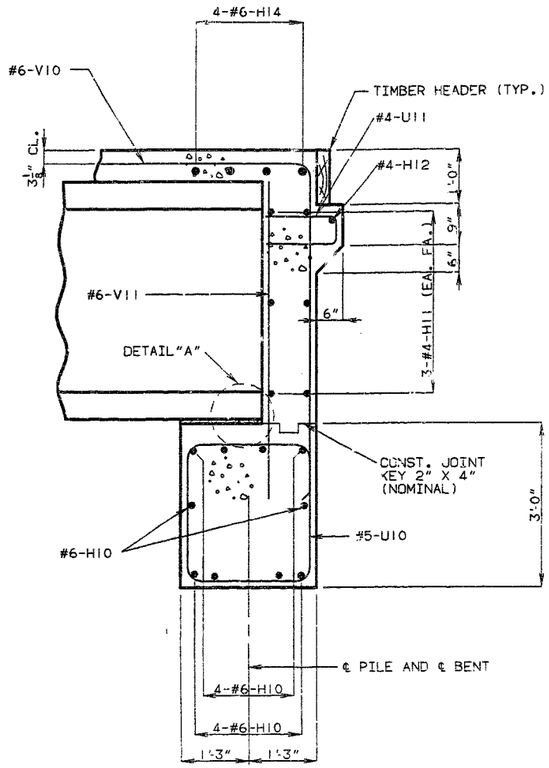


SECTION A-A

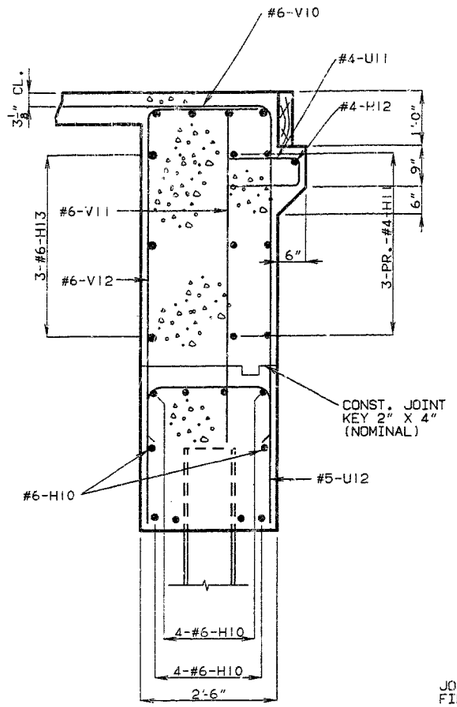


SECTION B-B

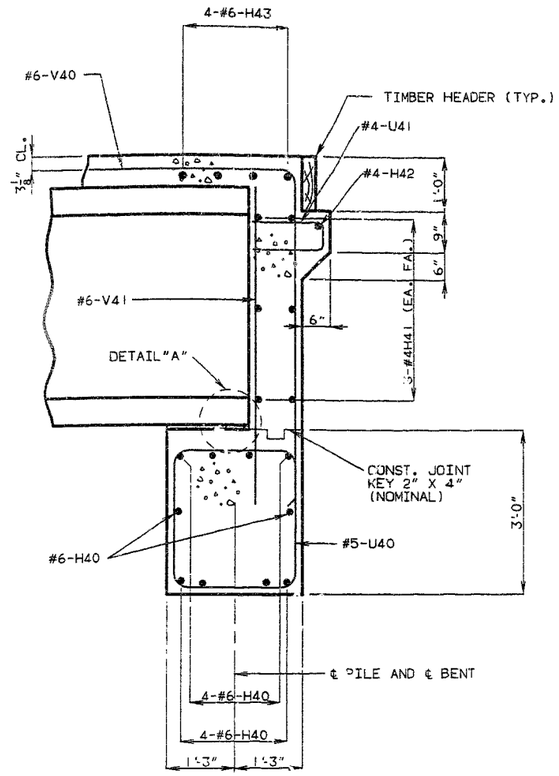


SECTION C-C

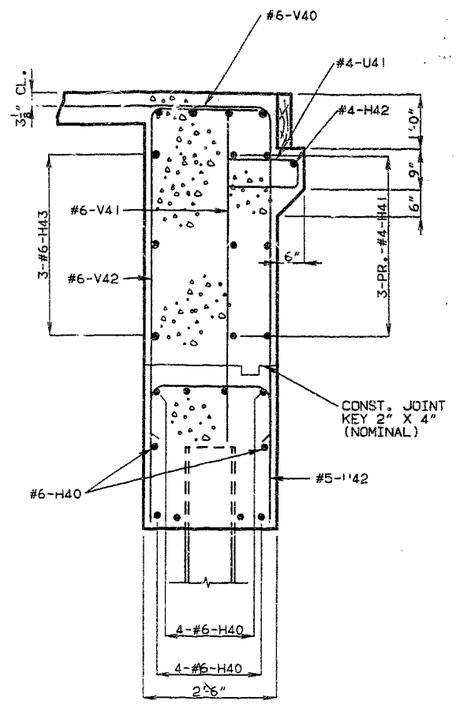


SECTION D-D

SECTIONS AT END BENT NO. 1

SECTIONS AT END BENT NO. 4

| * SUBSTRUCTURE QUANTITY TABLE FOR END BENT NO. 1 | | |
|---|---|---|
| ITEM | | QUANTITY |
| CLASS 1 EXCAVATION | CU. YDS. | 13 |
| STRUCTURAL STEEL PILE (10IN.) | LIN. FT. | 179 |
| CLASS B CONCRETE (SUBSTRUCTURE) | CU. YDS. | 8.3 |
| | | |
| | | |
| | | |

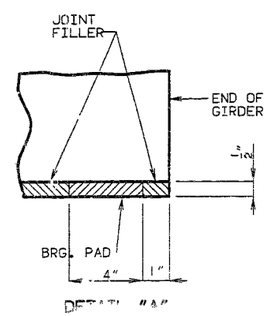


DETAIL "A"

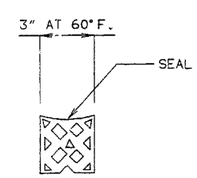


PART CROSS SECTION
THRU COMP. JOINT SEAL

NOTE: DEPTH OF SEAL SHALL NOT BE LESS THAN WIDTH OF SEAL.

| * SUBSTRUCTURE QUANTITY TABLE FOR END BENT NO. 4 | | |
|---|---|---|
| ITEM | | QUANTITY |
| CLASS 1 EXCAVATION | CU. YDS. | 17 |
| STRUCTURAL STEEL PILE (10IN.) | LIN. FT. | 187 |
| CLASS B CONCRETE (SUBSTRUCTURE) | CU. YDS. | 8.4 |
| | | |
| | | |
| | | |

NOTE:
FOR LOCATION OF SECTION A-A AND B-B SEE SHEET NO. 4.
FOR LOCATION OF SECTION C-C AND D-D SEE SHEET NO. 10.
FOR DETAILS OF TIMBER HEADER SEE SHEET NO. 24.
FOR DETAIL OF STEEL PILE SPLICE, SEE SHEET NO. 2.
* WORK THIS TABLE WITH THE ESTIMATED QUANTITIES ON SHEET NO. 2.

DETAILED SEPT. 1991
CHECKED MAY 1992

NOTE: THIS DRAWING IS NOT TO SCALE. FOLLOW DIMENSIONS.



JACKSON COUNTY

A-1240R1

45

| STATE | PROJ. NO. | SHEET NO. |
|---|---|---|
| MO. | J4108078 | 18 |

FINAL PLANS

NOTE:

FOR SECTION THRU KEY SEE SHEET NO. 7.
FOR DETAILS OF LAMINATED NEOPRENE BEARING PAD, SEE SHEET NO. 2.

① 1-LAYER OF 50# ROOFING FELT BETWEEN JOINT FILLER.

| * SUBSTRUCTURE QUANTITY TABLE FOR BENT NO. 2 (E.B.L.) | | |
|---|---|---|
| ITEM | | QUANTITY |
| CLASS 1 EXCAVATION | CU. YDS. | 40 |
| CLASS B CONCRETE (SUBSTRUCTURE) | CU. YDS. | 19.2 |
| REINFORCING STEEL | LBS. | 2,960 |
| | | |

* WORK THIS TABLE WITH THE ESTIMATED QUANTITIES ON SHEET NO. 2.

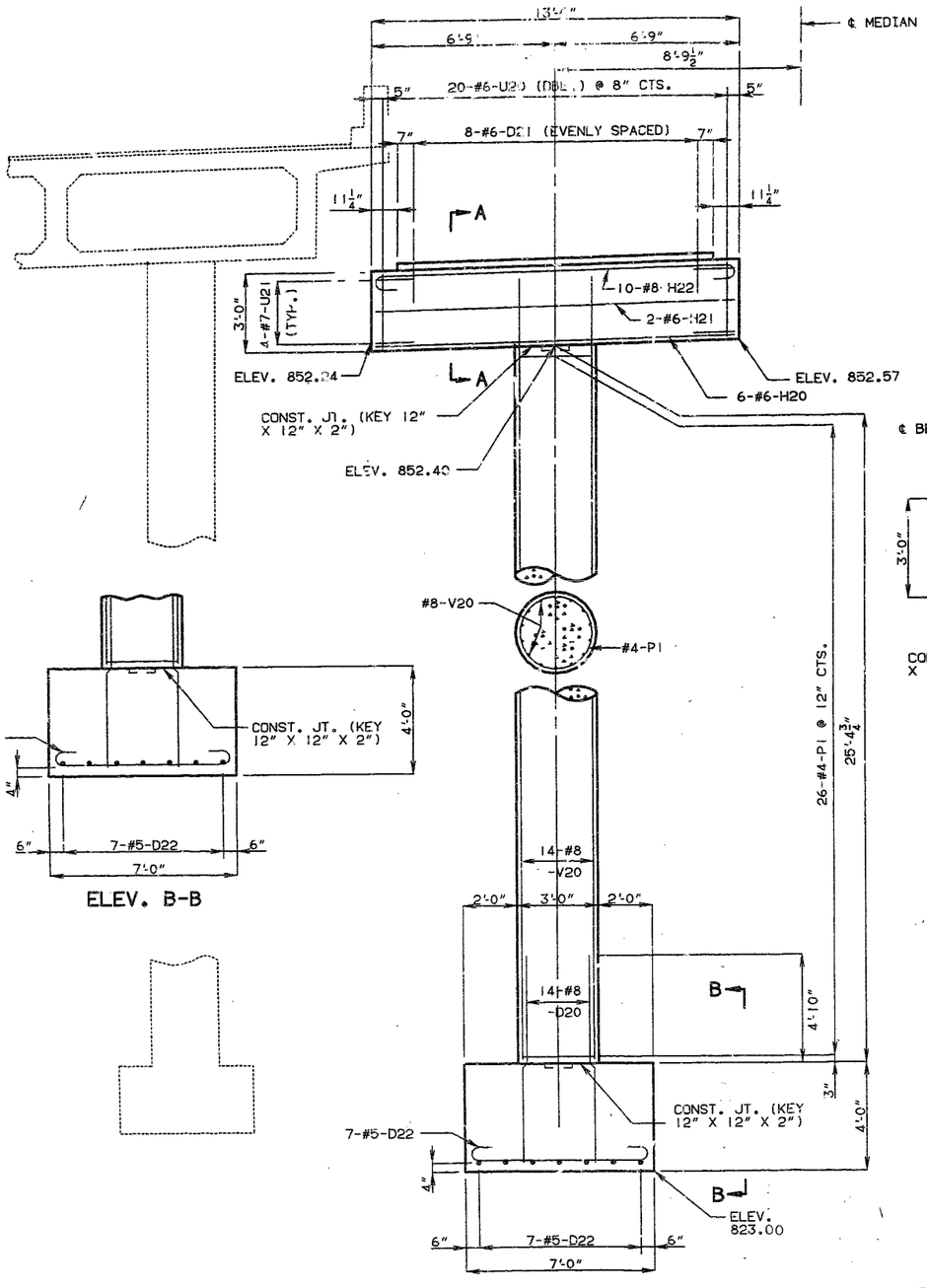


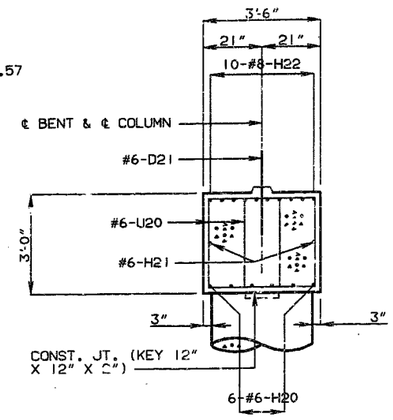


SECTION A-A

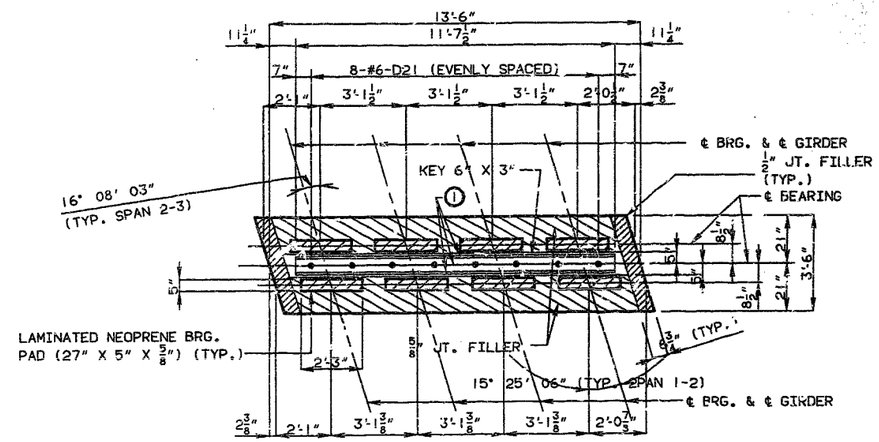


PLAN SHOWING BEARINGS

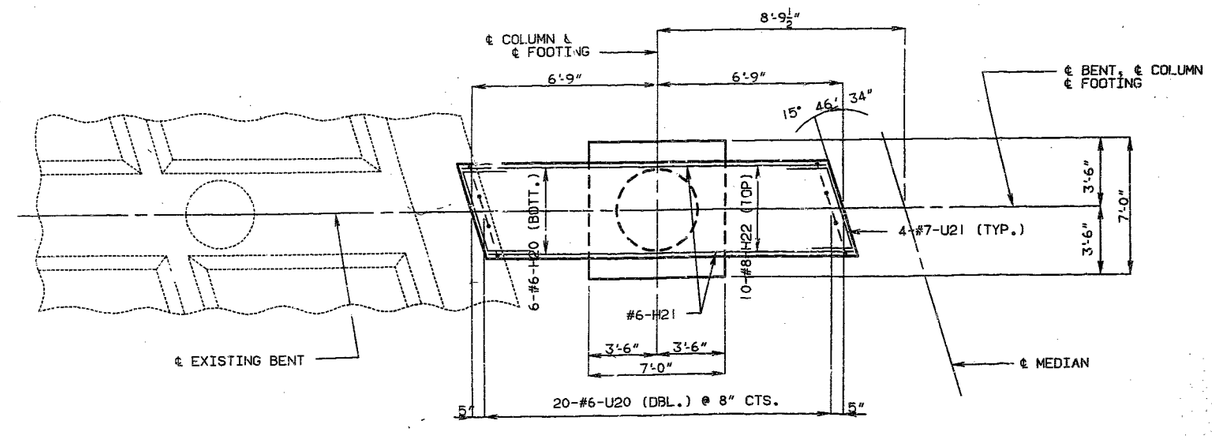


PLAN SHOWING REINFORCEMENT

INT. BT. 2 E.B.L.

DETAILED SEPT. 1991
CHECKED MAY 1992

NOTE: THIS DRAWING IS NOT TO SCALE. FOLLOW DIMENSIONS.

SHEET NO. 6A OF 35.

JACKSON COUNTY A-1240R1

97 46

| STATE | PROJ. NO. | SHEET NO. |
|---|---|---|
| NO. | J410807B | 19 |

FINAL PLANS

**NOTE:**

FOR DETAILS OF LAMINATED NEOPRENE BEARING PAD SEE SHEET NO. 2.

(1) 1-LAYER OF 50# ROOFING FELT BETWEEN JOINT FILLER.

| * SUBSTRUCTURE QUANTITY TABLE FOR BENT NO. 2 (W.B.L.) | | |
|---|---|---|
| ITEM | | QUANTITY |
| CLASS 1 EXCAVATION | CU. YDS. | 55 |
| CLASS B CONCRETE (SUBSTRUCTURE) | CU. YDS. | 19.7 |
| REINFORCING STEEL | LBS. | 3,060 |
| | | |

* WORK THIS TABLE WITH THE ESTIMATED QUANTITIES ON SHEET NO. 2.

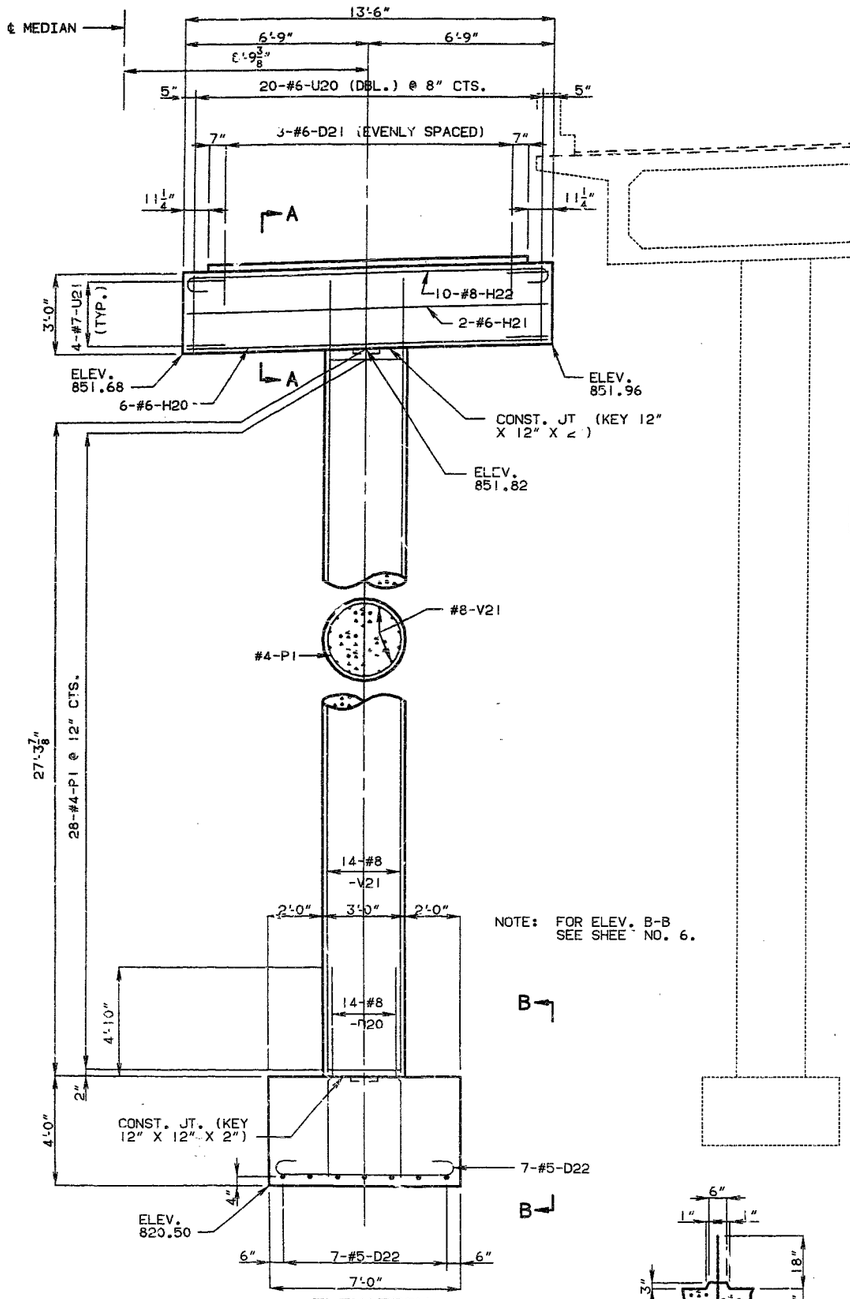


ELEVATION

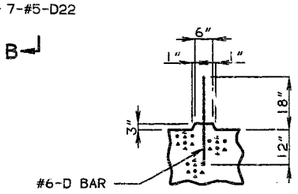


SECTION THRU KEY

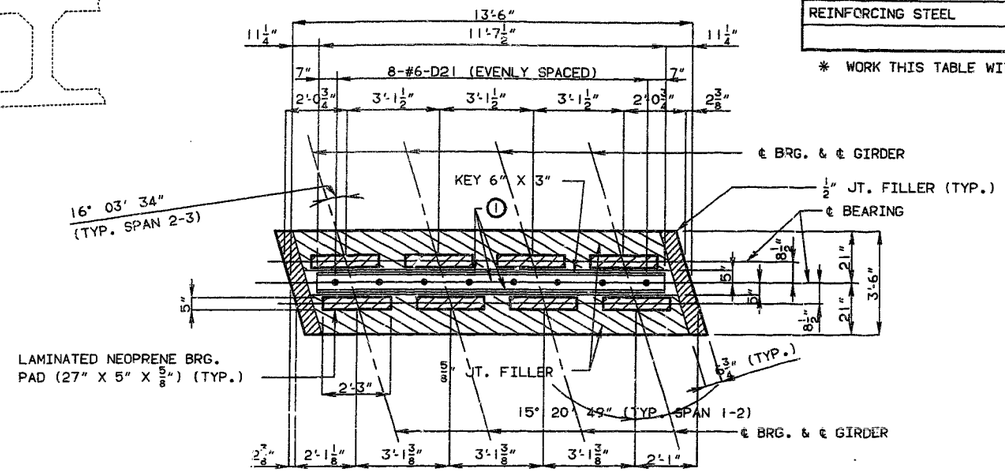


PLAN SHOWING BEARINGS

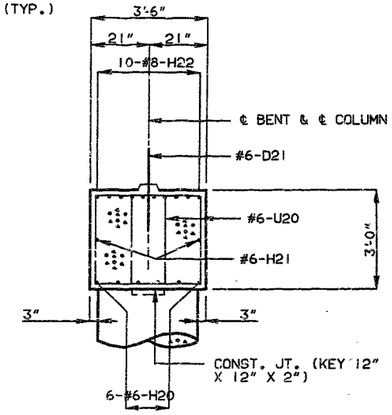


SECTION A-A

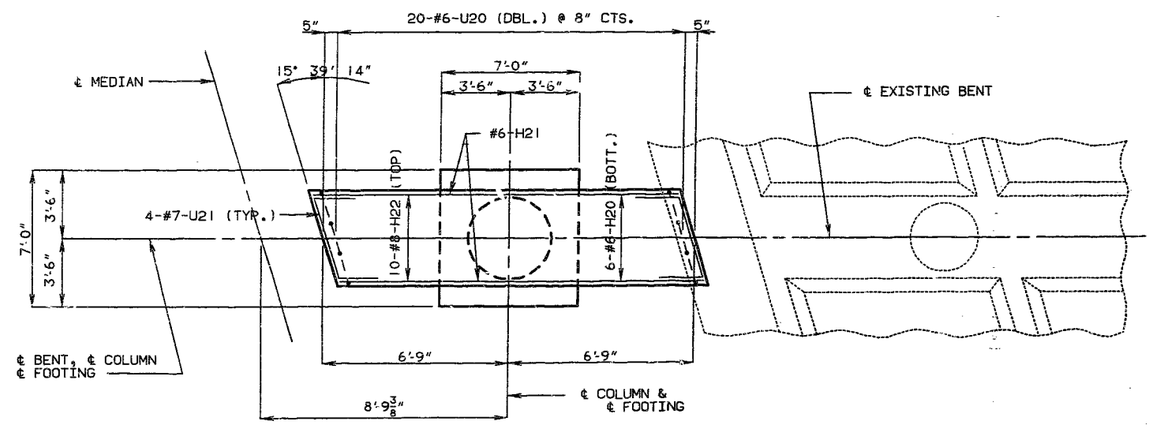


PLAN SHOWING REINFORCEMENT

INT. BT. 2 W.B.L.

DETAILED SEPT. 1991
CHECKED MAY 1992

NOTE: THIS DRAWING IS NOT TO SCALE. FOLLOW DIMENSIONS.

SHEET NO. 7A OF 35.

JACKSON COUNTY A-1240R1

57 47

| STATE | PROJ. NO. | SHEET NO. |
|---|---|---|
| MO. | J4I0807B | 20 |

FINAL PLAN

**NOTE:**

FOR DETAILS OF LAMINATED NEOPRENE BEARING PAD SEE SHEET NO. 2.

FOR SECTION THRU KEY SEE SHEET NO. 7.

(1) 1-LAYER OF 50# ROOFING FELT BETWEEN JOINT FILLER.

*** SUBSTRUCTURE QUANTITY TABLE FOR BENT NO. 3 (E.B.L.)**

| ITEM | | QUANTITY |
|---|---|---|
| CLASS I EXCAVATION | CU. YDS. | 52 |
| CLASS B CONCRETE (SUBSTRUCTURE) | CU. YDS. | 19.3 |
| REINFORCING STEEL | LBS. | 2,980 |
| | | |

* WORK THIS TABLE WITH THE ESTIMATED QUANTITIES ON SHEET NO. 2.

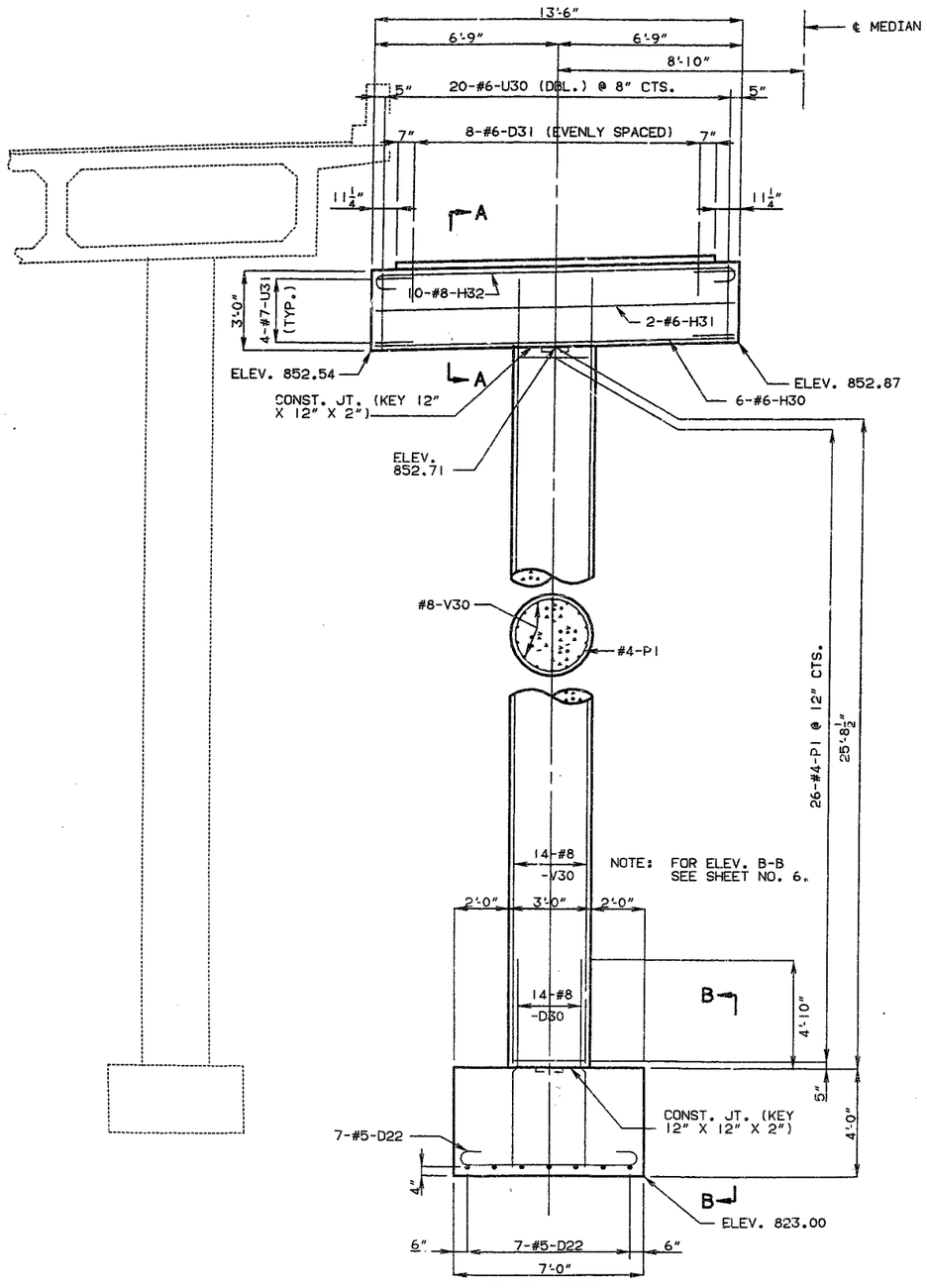


ELEVATION

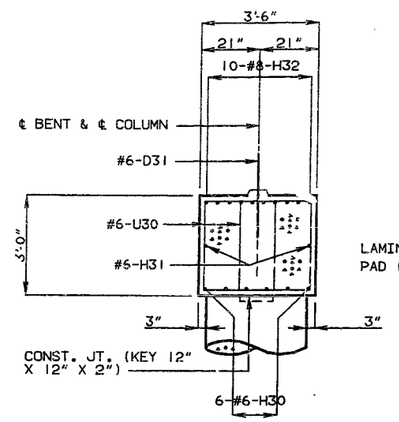


SECTION A-A

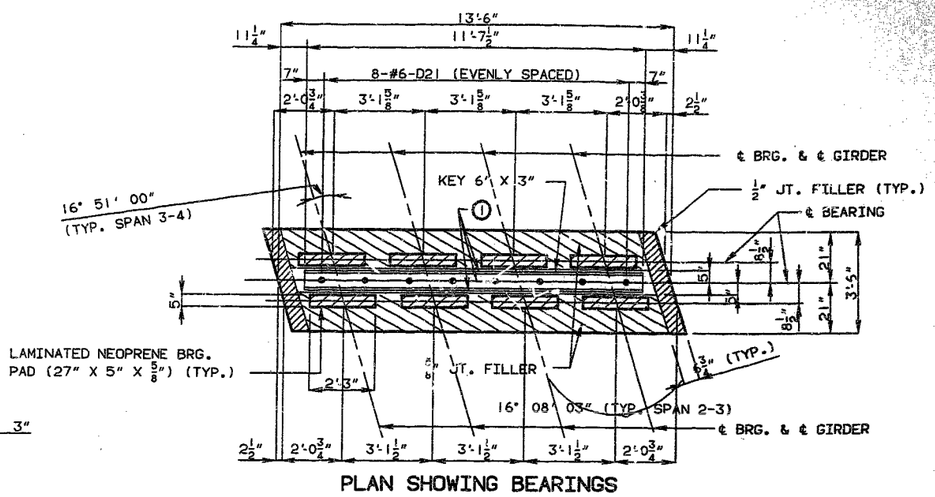


PLAN SHOWING BEARINGS

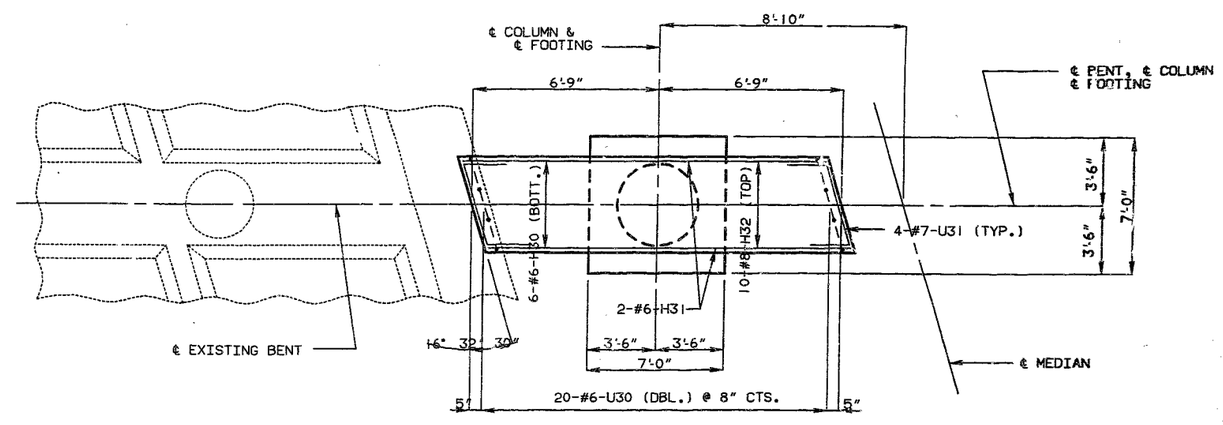


PLAN SHOWING REINFORCEMENT

INT. BT. 3 E.B.L.

53 48

DETAILED SEPT. 1991
CHECKED MAY 1992

NOTE: THIS DRAWING IS NOT TO SCALE. FOLLOW DIMENSIONS.

SHEET NO. 8A OF 35.

JACKSON COUNTY A-1240R1

| STATE | PROJ. NO. | SHEET NO. |
|---|---|---|
| MO. | J4L0807B | 21 |

FINAL PLANS

NOTE:

FOR DETAILS OF LAMINATED NEOPRENE BEARING PAD SEE SHEET NO. 2.

(1) 1-LAYER OF 50# ROOFING FELT BETWEEN JOINT FILLER.

| * SUBSTRUCTURE QUANTITY TABLE FOR BENT NO. 3 (W.B.L.) | | |
|---|---|---|
| ITEM | | QUANTITY |
| CLASS I EXCAVATION | CU. YDS. | 50 |
| CLASS B CONCRETE (SUBSTRUCTURE) | CU. YDS. | 19.3 |
| REINFORCING STEEL | LBS. | 2,980 |
| | | |

* WORK THIS TABLE WITH THE ESTIMATED QUANTITIES ON SHEET NO. 2.

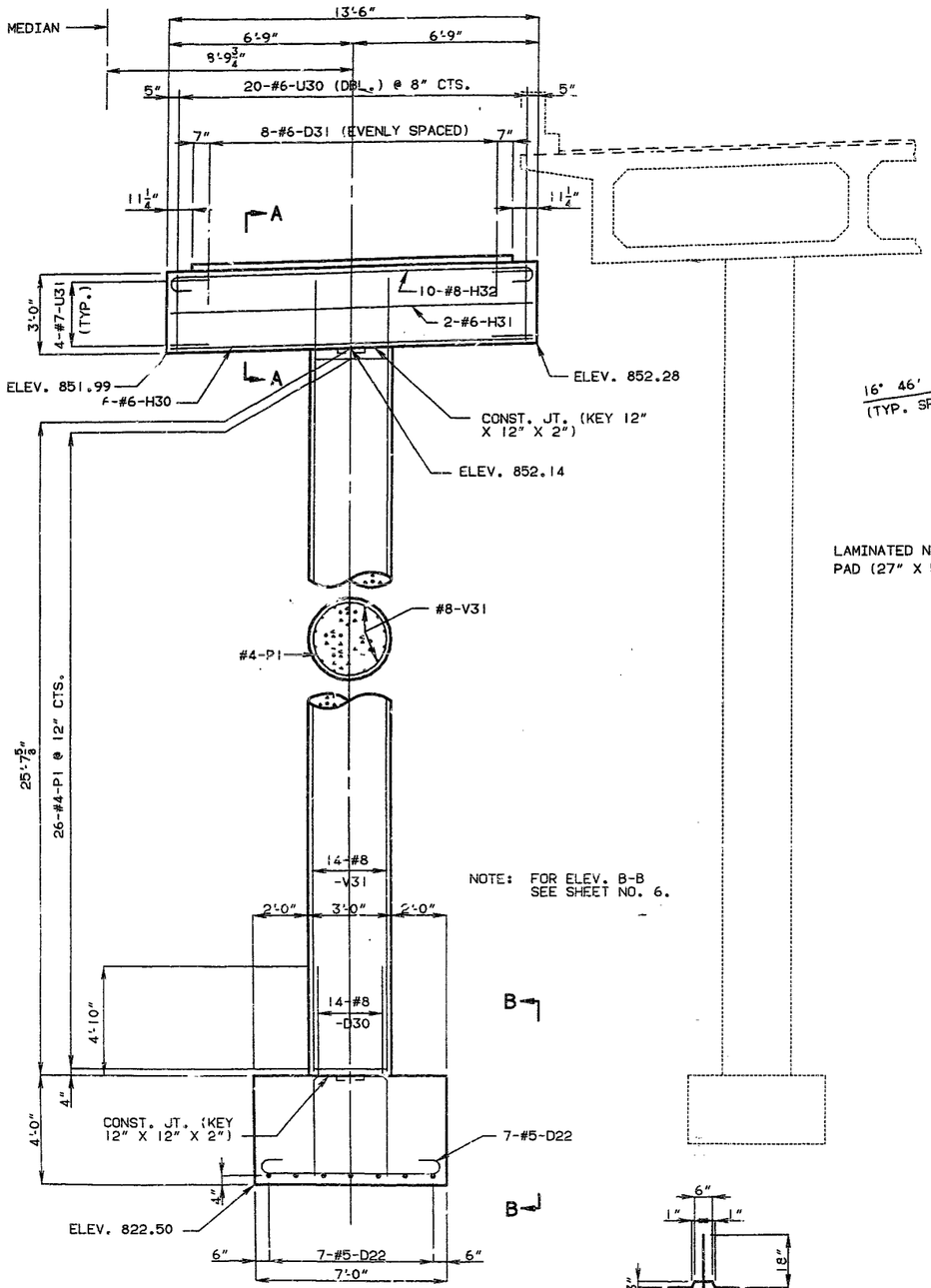


ELEVATION

NOTE: FOR ELEV. B-B SEE SHEET NO. 6.

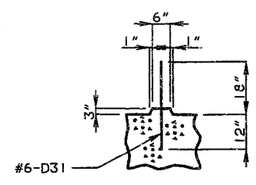


SECTION THRU KEY

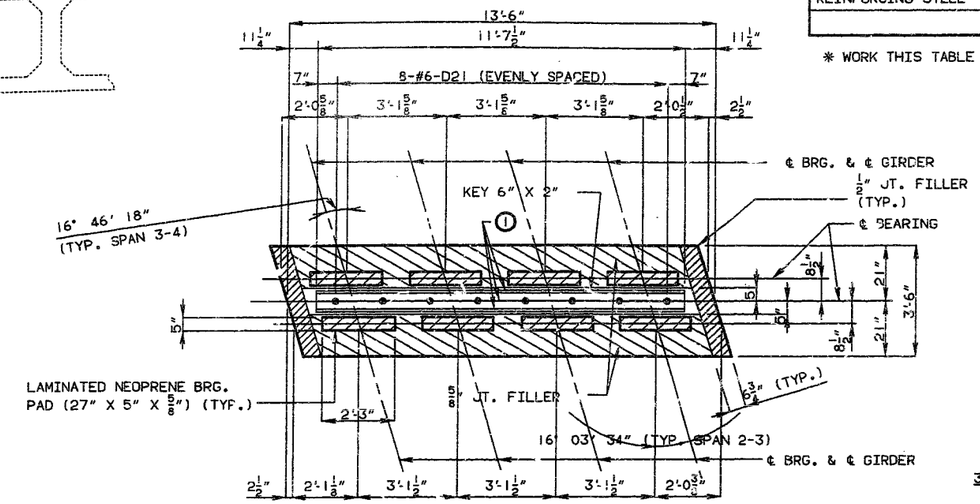


PLAN SHOWING BEARINGS

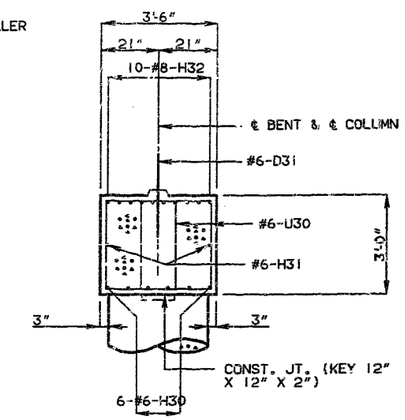


SECTION A-A

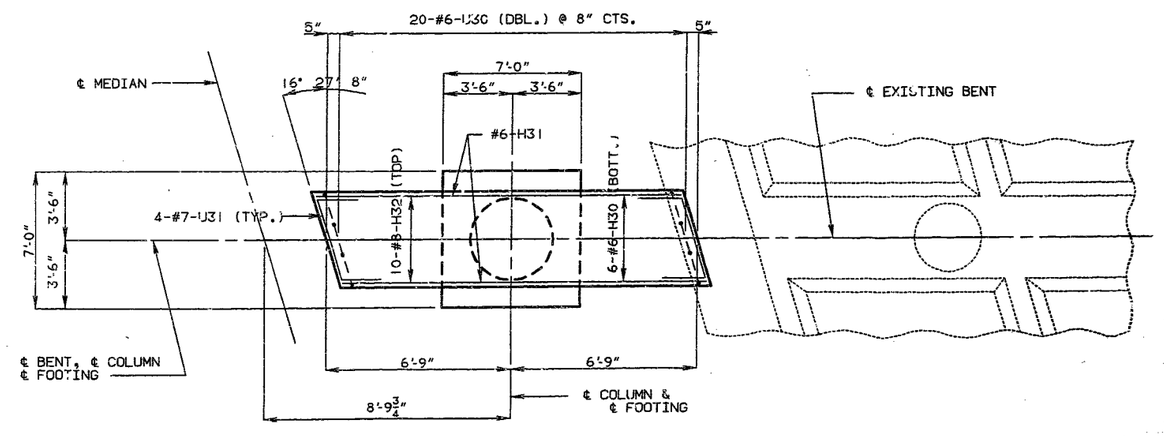


PLAN SHOWING REINFORCEMENT

INT. BT. 3 W.B.L.

DETAILED SEPT. 1991
CHECKED MAY 1992

NOTE: THIS DRAWING IS NOT TO SCALE. FOLLOW DIMENSIONS.

SHEET NO. 9A OF 35.

JACKSON COUNTY A-1240R1

54 of 69

| STATE | PROJ. NO. | SHEET NO. |
|---|---|---|
| MO. | J4108078 | 47 |

FINAL PLANS

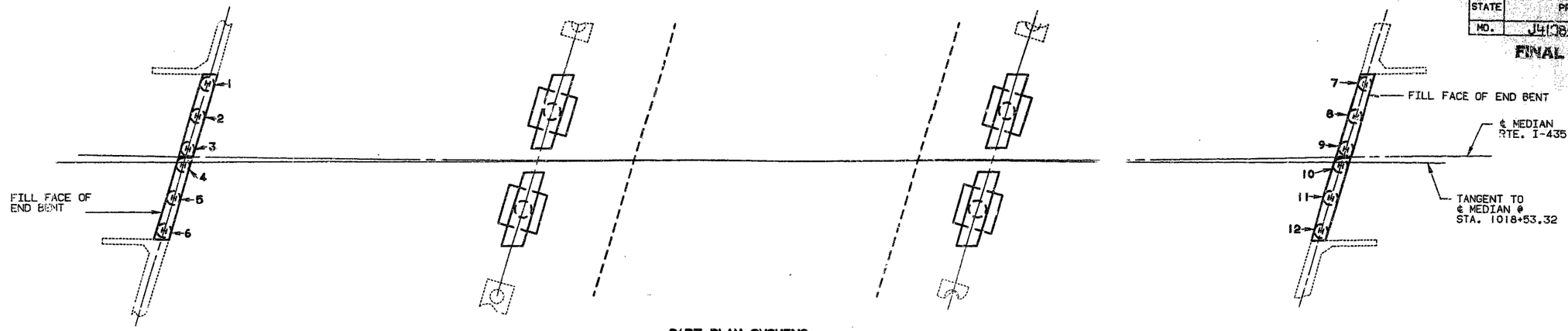


PART PLAN SHOWING
PILE NUMBERING FOR RECORDING
"AS BUILT PILE" DATA

"AS BUILT PILE" DATA

| PILE NO. | LENGTH IN PLACE (FT.) | COMPUTED BEARING (TONS) | REMARKS |
|---|---|---|---|
| | | | END BENT NO. 1 |
| 1 | 30 | 120 | HP 10X42 |
| 2 | 30 | 120 | |
| 3 | 31 | 133 | |
| 4 | 29 | 120 | |
| 5 | 29 | 133 | |
| 6 | 30 | 120 | |
| | | | END BENT NO. 4 |
| 7 | 32 | 120 | HP 10X42 |
| 8 | 32 | 100 | |
| 9 | 31 | 120 | |
| 10 | 30 | 100 | |
| 11 | 30 | 120 | |
| 12 | 32 | 100 | |
| | | | * ALL PILE DRIVEN TO PRACTICAL REFUSAL |

"AS BUILT PILE" DATA

| PILE NO. | LENGTH IN PLACE (FT.) | COMPUTED BEARING (TONS) | REMARKS |
|---|---|---|---|

"AS BUILT PILE" DATA

| PILE NO. | LENGTH IN PLACE (FT.) | COMPUTED BEARING (TONS) | REMARKS |
|---|---|---|---|

NOTE: INDICATE IN REMARK COLUMN:
A.) IF PILING WERE DRIVEN TO PRACTICAL REFUSAL.
B.) PILE BATTER IF OTHER THAN SHOWN ON BENT DETAIL SHEET.
C.) TYPE OF PILING USED.

*NOTE: THIS SHEET TO BE COMPLETED BY MHTD CONSTRUCTION PERSONNEL.*

MISC. PILES IN PLACE
PILES IN PLACE REVISED:
MAY 1992

DETAILED MAY 1992
CHECKED MAY 1992

NOTE: THIS DRAWING IS NOT TO SCALE. FOLLOW DIMENSIONS.

SHEET NO. 35A OF 35.

JACKSON COUNTY A-1240R1