# MISSOURI STATE HIGHWAY DEPARTMENT

| FED. ROAD PROJ. NO. | STATE | FEDERAL PROJECT NO. & SEC. | FISCAL YEAR | SHEET NO. | TOTAL SHEETS |
|---|---|---|---|---|---|
| 5 | MO | | | 71 | |
| DIST. NO. | COUNTY | | ROUTE | SEC. | |
| 4 | JACKSON | | | | |

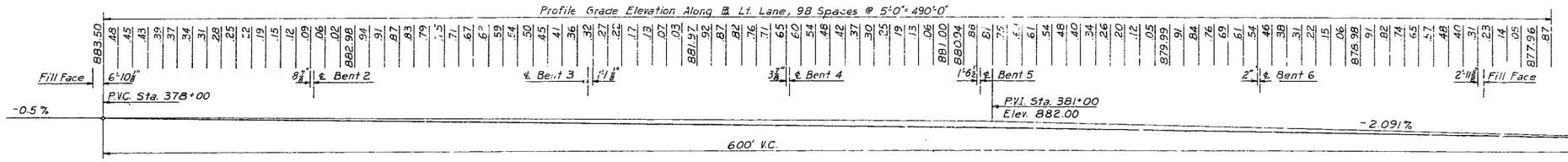


## PROFILE GRADE

76', 94', 67', 67', 94', 76' CONTINUOUS CONCRETE BOX GIRDER SPANS

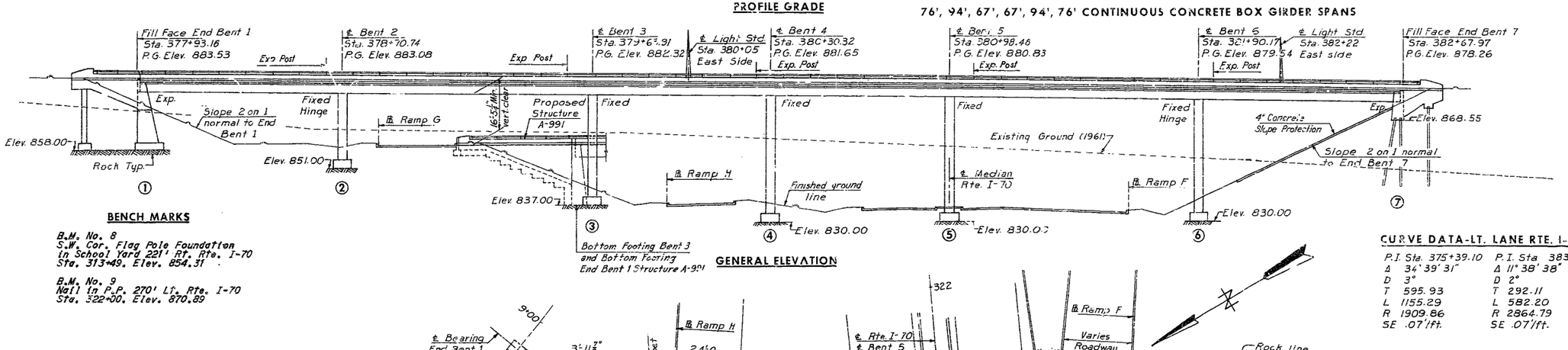


## GENERAL ELEVATION

### BENCH MARKS

B.M. No. 8
S.W. Cor., Flag Pole Foundation in School Yard 221' Rt. Rte. I-70
Sta. 313+49. Elev. 854.31

B.M. No. 9
Nail in P.P. 270' Lt. Rte. I-70
Sta. 322+00. Elev. 870.89

### CURVE DATA-LT. LANE RTE. I-435

| | |
|---|---|
| P.I. Sta. 375+39.10 | P.I. Sta 383+90.57 |
| Δ 34°39'31" | Δ 11°38'38" |
| D 3° | D 2° |
| T 595.93 | T 292.11 |
| L 1155.29 | L 582.20 |
| R 1909.86 | R 2864.79 |
| SE .07'/ft. | SE .07'/ft. |

Note: Roadway excavation shall be completed adjacent to this site before substructure is started, See Special Provisions.

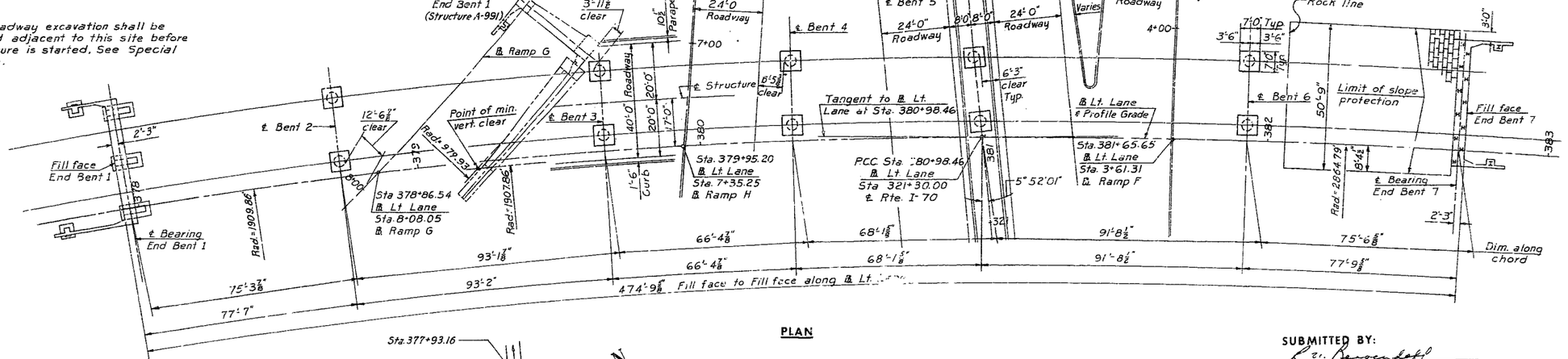


## PLAN

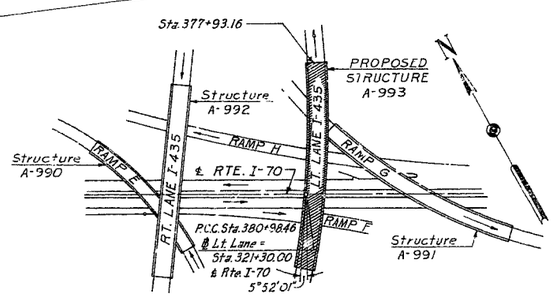


## LOCATION SKETCH

Notes
Concrete slope protection on front slopes at End Bent 7 to be included under road contract. Provide ½" filler between slope protection pavement and End Bent 7.
Concrete slope protection shall be extended a minimum of 6" into rock or shale.
Joints shall consist of material conforming to Section 157.1.7 of the Standard Specifications.
Compacted roadway fill (full roadway width) shall be placed up to elevation of bottom of concrete beam in front of and not less than 25'-0" in back of End Bent 7 before steel piles are driven.
Bents cannot be located from the reference point on the tangent by conventional survey methods based on 100' chords.
All dimensions shown are horizontal.
For location of piles in End Bent 7 see sheet 9.

SUBMITTED BY:
R. Bergendoff
REGISTERED PROFESSIONAL ENGINEER
MISSOURI NO. E-253

## BRIDGE: LT. LANE RTE. I-435 OVER RAMPS "G" "H" & "F" & RTE. I-70

STATE ROAD - ROUTES I-435 & I-70 INTERCHANGE
FROM ROUTE 40 TO LEEDS ROAD
PROJECT NO. I-435-1(24)(RTE. I-435) STA. 380+98.46(LT. LANE)

## JACKSON COUNTY

SUBMITTED BY [illegible] DATE 7/25/62
BRIDGE ENGINEER
APPROVED BY [illegible] DATE 7/25/62
CHIEF ENGINEER

STD. 54.00
A-993

HOWARD, NEEDLES, TAMMEN & BERGENDOFF
CONSULTING ENGINEERS
KANSAS CITY NEW YORK

| | | | |
|---|---|---|---|
| MADE L.W.L. | DATE 2-14-62 | TRACED | DATE |
| CHECKED J.L.W. | DATE 3-28-62 | SCALE | |

NOTE: This drawing is not to scale. Follow dimensions.

SHEET 1 OF 17

340

# MISSOURI STATE HIGHWAY DEPARTMENT

| FED. ROAD DIV. NO. | STATE | FEDERAL PROJECT NO. & SEC. | FISCAL YEAR | SHEET NO. | TOTAL SHEETS |
|---|---|---|---|---|---|
| 5 | MO | | | 72 | |
| DIST. NO. | COUNTY | | ROUTE | SEC. | |
| 4 | JACKSON | | | | |

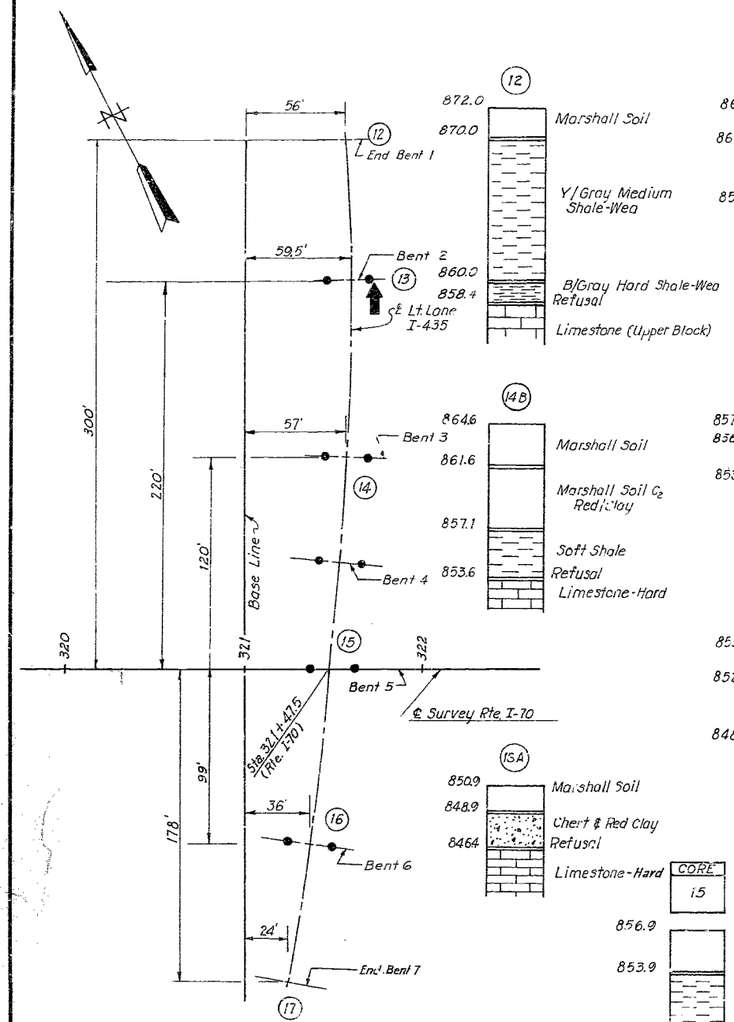


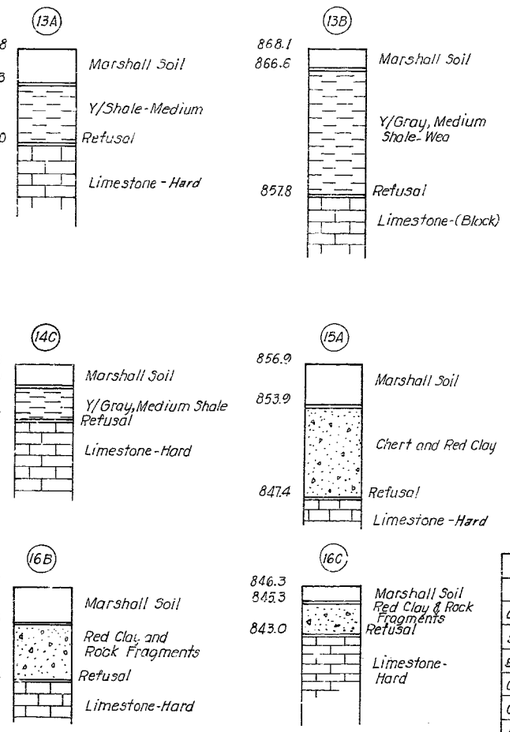


## ESTIMATED QUANTITIES

| ITEM | UNIT | SUBSTR. | SUPERSTR. | TOTAL |
|---|---|---|---|---|
| Class 1 Excavation for Structures | Cu. Yd. | 500 | | 500 |
| Steel Piles in Place (10BP42) | Lin. Ft. | 390 | | 390 |
| Steel Pile Cut-Offs (10 BP 42) | Lin. Ft. | 39 | | 39 |
| Class B Concrete | Cu. Yd | 210.9 | | 210.9 |
| Class B1 Concrete | Cu Yd. | | 1,481.1 | 1,481.1 |
| Reinforcing Steel | Lbs. | 24,500 | 572,590 | 597,090 |
| Fabricated Structural Carbon Steel | Lbs. | | 8,310 | 8,310 |
| Bridge Rail (Single Tube Type) | Lin. ft. | | 993 | 993 |
| Conduit System (on Structure) | L.S. | | | 1 |

Quantity Notes

Class 1 Excavation for Structures will be measured from the existing ground line or from the lower limits of roadway excavation, whichever is lower, regardless of the sequence of operations or method of removal.
All excavation for bridge will be paid for as Class 1 Excavation for Structures. No payment for excavation will be allowed at end Bent No. 7.
All concrete and reinforcement at intermediate bents above top of footing are included in superstructure quantities.
Estimated quantity of Class B concrete substructure includes all concrete in abutments and intermediate bent footings. All other concrete is included in estimated quantity of Class B1 concrete.
Weight of bearings is included in weight of Fabricated Structural Carbon Steel.

Estimated quantities of steel piles in place shown on plans are based on the following lengths: 13 at 33' (End Bent 7).
These indicated lengths are approximate only. Proper lengths to give required bearing and/or penetration will be authorized by the Engineer.

## LOG OF SOUNDINGS

Note:
All soundings are made with power auger except as noted for number 15.

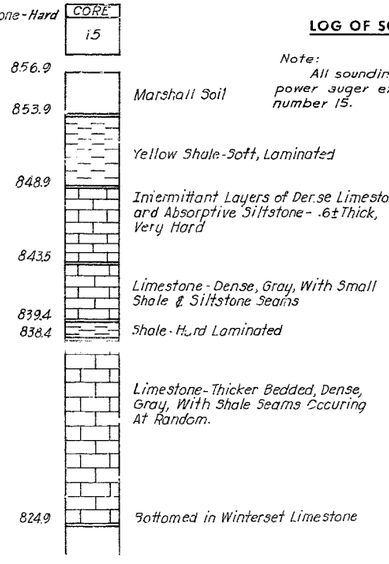


Note:
Soundings with Subscript "A" are on ℄ of Roadway.
Soundings with Subscript "B" are 35' Rt of ℄.
Soundings with Subscript "C" are 35' Lt. of ℄.

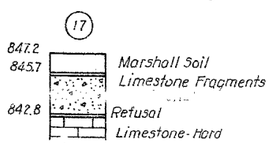


## GENERAL NOTES

Design Specifications

A.A.S.H.O. 1961.

Design Loading

H20-S16-44 with 15# sq. ft. future wearing surface. (Modified 24,000# Tandem Axles)

Concrete

Concrete Stress - Class B1 fc = 1,600 p.s.i.
Class B fc = 1,200 p.s.i.
Concrete for superstructure shall be Class B1 air-entrained. Concrete for substructure shall be Class B air-entrained.

Reinforcing Steel

Allowable stress 20,000 p.s.i. All splices in reinforcing steel shall be 32 bar diameters.
Bar sizes are designated on the plans by numbers. The first digit after the letter in three digit marks and the first two digits after the letter in four digit marks indicate the size of bar.
Dimensions shown on the plans from the reinforcing steel to outside edge of concrete are all clear dimensions.
All bending dimensions are from "out to out" of bars.

Joint Filler

Where joint filler is specified on the plans it shall conform with the requirements for gray sponge rubber compound joints as given in Section 157.2.4 of the Standard Specifications.

Metal Conduits

Expansion fittings shall be required in steel conduit at all expansion joints. Expansion fittings shall be O. Z. Electrical Manufacturing Company Type AX-125 with AJ bonding jumper or equal.

Sealing of Decks

Superstructure deck to be surface sealed. See Special Provisions.

Welding

Qualification of welding operators will be required.

Utilities

All utilities, unless shown otherwise, shall be removed or relocated by others. The Contractor will notify the owner of the utilities of his work schedule sufficiently in advance to allow time for the disposition of utilities.

Shipping

Permits must be obtained for all truck loads over legal length.

Piling

All piles shall be 10BP42 and shall conform with details and notes shown on Sheet No. 9. All piles shall be driven to or into solid rock, boulders, shale or cemented gravel, or to not less than full length authorized, and to sustain a load of at least 37 tons per pile for 10BP42.
All piles shall be driven with a power hammer.
See Section 52.47 of Standard Specifications, for required painting of steel piles.

Excavation to Rock

All loose, shelly or disintegrated rock shall be removed and footings placed on hard, solid, undisturbed rock. If soft rock or shale is encountered, the footings shall be carried at least 18" into and cast against vertical faces of same. In no case shall the footings of bents 3 thru 7 be placed higher than elevations shown. Bearing of 12 tons per sq. ft. was used in design of footings.

GENERAL NOTES CONT'D

Painting

Paint: Shop none, except as noted for bearings; Field, three coats of red lead for surfaces inaccessible after erection. All other exposed surfaces except as noted for bearings first coat red lead, second coat brown, third coat aluminum except that final coat on access doors and frames shall be gray. Payment for paint, cleaning and painting such surfaces shall be included in the unit price bid for fabricated Structural Carbon Steel.

# BRIDGE: LT. LANE RTE. I-435 OVER RAMPS "G," "H" & "F" & RTE. I-70

STATE ROAD - ROUTES I-435 & I-70 INTERCHANGE
FROM ROUTE 40 TO LEEDS ROAD
PROJECT NO. I-435-1(24)(RTE. I-435) STA. 380+98.46 (LT. LANE)

## JACKSON COUNTY

A-993

HOWARD, NEEDLES, TAMMEN & BERGENDOFF
CONSULTING ENGINEERS
KANSAS CITY NEW YORK

| | | | |
|---|---|---|---|
| MADE JHW | DATE 2-14-62 | TRACED | DATE |
| CHECKED L.J.R | DATE 2-16-62 | SCALE | |

NOTE: This drawing is not to scale. Follow dimensions.



3411

# MISSOURI STATE HIGHWAY DEPARTMENT

| FED. ROAD DIV. NO. | STATE | FEDERAL PROJECT NO. & SEC. | FISCAL YEAR | SHEET NO. | TOTAL SHEETS |
|---|---|---|---|---|---|
| 5 | MO | | | 73 | |
| DIST. NO. | COUNTY | | ROUTE | SEC. | |
| 4 | JACKSON | | | | |

## BILL OF REINFORCEMENT

| NO. | MARK | LENGTH | SHAPE | LOCATION |
|---|---|---|---|---|
| | | SUBSTRUCTURE | | |
| | | END BENT 1 | | |
| 24 | F601 | 4'-4" | Str. | Footing |
| 15 | F801 | 10'-0" | Str. | Footing |
| 21 | F802 | 4'-6" | Str. | Footing |
| 16 | F803 | 6'-3" | L | Footing |
| 24 | F804 | 5'-6" | Str. | Footing |
| 18 | F1001 | 7'-1" | L | Footing |
| 40 | H401 | 9'-11" | | Column |
| 2 | H402 | 9'-3" | | Column |
| 6 | H403 | 8'-7" | | Column |
| 6 | H404 | 6'-9" | | Maskwall |
| 4 | H501 | 16'-3" | Str. | Wingwall |
| 4 | H502 | 6'-6" | Str. | End Post |
| 4 | H503 | 8'-2" | Str. | End Post |
| 4 | H504 | 26'-3" | Str. | Wingwall |
| 3 | H601 | 13'-3" | | Pedestal |
| 3 | H602 | 14'-0" | | |
| 3 | H603 | 14'-9" | | |
| 3 | H604 | 15'-6" | | |
| 3 | H605 | 16'-3" | | |
| 3 | H606 | 17'-0" | | |
| 3 | H607 | 17'-9" | | |
| 3 | H608 | 18'-6" | | |
| 3 | H609 | 19'-3" | | |
| 2 | H610 | 20'-0" | | |
| 1 | H611 | 20'-9" | | |
| 1 | H612 | 19'-8" | | Pedestal |
| 12 | H613 | 44'-5" | Str. | Backwall & Beam |
| 7 | H614 | 7'-2" | | Beam |
| 9 | H615 | 26'-5" | | Wingwall |
| 2 | H616 | 19'-0" | | |
| 2 | H617 | 17'-6" | | |
| 2 | H618 | 15'-10" | | |
| 2 | H619 | 14'-5" | | |
| 2 | H620 | 12'-8" | | |
| 2 | H621 | 11'-2" | | |
| 2 | H622 | 10'-9" | | |
| 2 | H623 | 9'-4" | | |
| 2 | H624 | 7'-8" | | |
| 3 | H625 | 6'-2" | | |
| 3 | H626 | 4'-8" | | |
| 2 | H627 | 25'-0" | | Wingwall |
| 10 | H628 | 8'-0" | | Fillet |
| 7 | H629 | 16'-5" | | Wingwall |
| 2 | H630 | 13'-7" | | Wingwall |
| 2 | H631 | 15'-[illegible] | Str. | Wingwall |
| 5 | H1001 | 44'-5" | Str. | Beam |
| 2 | H1101 | 44'-5" | Str. | Beam |
| 6 | H1102 | 13'-0" | Str. | Beam |
| 3 | H1103 | 11'-8" | Str. | Beam |
| 8 | V401 | 6'-2" | Str. | Maskwall |
| 26 | V402 | 5'-11" | | Wingwall |
| 54 | V501 | 6'-9" | Str. | Backwall |
| 12 | V502 | 3'-2" | Str. | Wingwall |
| 2 | V503 | 3'-7" | Str. | Wingwall |
| 4 | V504 | 4'-1" | Str. | Wingwall |
| 4 | V505 | 4'-9" | Str. | Wingwall |
| 2 | V506 | 5'-2" | | |
| 4 | V507 | 5'-8" | | |
| 2 | V508 | 6'-2" | | |
| 2 | V509 | 6'-8" | | Wingwall |
| 4 | V510 | 7'-2" | | Wingwall & Fillet |
| 2 | V511 | 7'-7" | | Wingwall |
| 7 | V512 | 7'-11" | | Wingwall & Fillet |
| 2 | V513 | 8'-5" | | Wingwall & Fillet |
| 2 | V514 | 8'-11" | | Wingwall & Fillet |
| 30 | V515 | 7'-7" | | Wingwall |
| 18 | V516 | 9'-7" | | End Post |
| 10 | V517 | 3'-9" | Str. | Wingwall |
| 2 | V518 | 6'-5" | Str. | Wingwall |
| 4 | V601 | 15'-2" | Str. | Pedestal |
| 4 | V602 | 15'-10" | | |
| 4 | V603 | 18'-1" | | |
| 2 | V604 | 10'-6" | | |
| 2 | V605 | 11'-9" | | |
| 2 | V606 | 13'-0" | | |
| 2 | V607 | 4'-9" | | |
| 2 | V608 | 6'-0" | | |
| 2 | V609 | 7'-3" | Str. | Pedestal |
| 4 | V610 | 14'-1" | | Beam |
| 26 | V611 | 15'-9" | | Beam |
| 2 | V801 | 25'-3" | Str. | Column |
| 6 | V802 | 23'-3" | | |
| 2 | V803 | 23'-3" | Str. | |
| 6 | V804 | 25'-3" | | Column |
| 3 | V1001 | 17'-0" | Str. | Pedestal |
| 3 | V1002 | 18'-2" | | |
| 3 | V1003 | 19'-5" | | |
| 3 | V1004 | 17'-6" | | |
| 3 | V1005 | 18'-8" | | |
| 3 | V1006 | 20'-0" | Str | Pedestal |
| | | END BENT 7 | | |
| 6 | h411 | 8'-3" | | Maskwall |
| 8 | H505 | 15'-3" | Str. | Wingwall |
| 4 | H506 | 6'-6" | Str. | End Post |
| 4 | H507 | 8'-2" | Str. | End Post |
| 18 | H640 | 44'-5" | Str. | Backwall & Beam |
| 4 | H641 | 13'-0" | | Beam |
| 2 | H642 | 11'-8" | | Beam |
| 6 | H643 | 15'-5" | | Wingwall |
| 6 | H644 | 18'-9" | | |
| 2 | H645 | 12'-7" | | |
| 2 | H646 | 13'-6" | | |
| 2 | H647 | 10'-3" | | |
| 2 | H648 | 7'-4" | | |
| 2 | H649 | 4'-0" | | |
| 2 | H650 | 5'-2" | | |
| 4 | H651 | 13'-3" | | Wingwall |
| 10 | H652 | 8'-0" | | Fillet |
| 4 | H653 | 5'-6" | Str. | Wingwall |
| 16 | H805 | 2'-8" | Str. | Wingwall |
| 4 | V405 | 5'-6" | Str. | Maskwall |
| 14 | V406 | 5'-11" | | Wingwall |
| 4 | V407 | 6'-2" | Str. | Maskwall |
| 54 | V521 | 7'-0" | Str. | Backwall |
| 28 | V522 | 15'-6" | | Beam |
| 6 | V523 | 13'-10" | | Beam |
| 22 | V524 | 7'-7" | | Wingwall |
| 18 | V525 | 9'-7" | | End Post |
| 6 | V526 | 7'-2" | Str. | Wingwall & Fillet |
| 4 | V527 | 7'-11" | | Wingwall & Fillet |
| 4 | V528 | 6'-5" | | Wingwall & Fillet |
| 4 | V529 | 5'-8" | | Wingwall |
| 4 | V530 | 4'-11" | | |
| 12 | V531 | 4'-0" | | |
| 4 | V532 | 3'-1" | | |
| 4 | V533 | 3'-7" | Str. | Wingwall |
| 4 | V615 | 6'-11" | L | Counterfort |
| | | SUBSTRUCTURE | | |
| | | INT. BENT 2 | | |
| 76 | F721 | 6'-8" | Str. | Footing |
| 12 | F821 | 9'-6" | | Footing |
| 12 | F1121 | 8'-5" | | Footing |
| | | INT. BENT 3 | | |
| 52 | F73. | 6'-8" | Str. | Footing |
| 24 | F1031 | 7'-3" | | Footing |
| | | INT. BENT 4 | | |
| 52 | F741 | 6'-8" | Str. | Footing |
| 24 | F1041 | 7'-3" | | Footing |
| | | INT. BENT 5 | | |
| 52 | F751 | 6'-8" | Str. | Footing |
| 24 | F1051 | 7'-3" | | Footing |
| | | INT. BENT 6 | | |
| 76 | F761 | 6'-8" | Str. | Footing |
| 12 | F861 | 9'-6" | | Footing |
| 12 | F1161 | 8'-5" | | Footing |

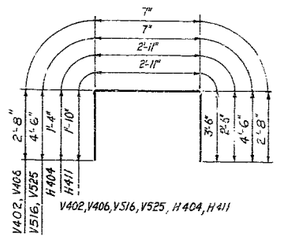

V402, V406, V516, V525, H404, H411

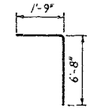

F1121, F1161

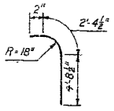

F1031 F1041, F1051

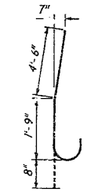

V615

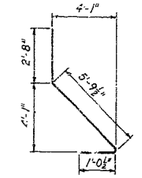

F821, F861

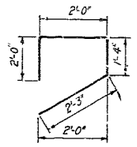

V515, V524

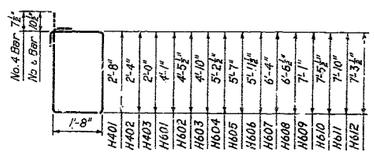

H401, H402, H403, H601, H602, H603, H604, H605, H606, H607, H609, H610, H611, H612, H608

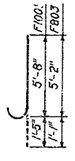

F1001, F803

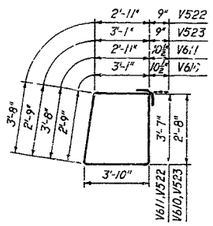

V522, V523, V510, V611

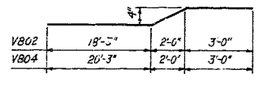

V802, V804

## BENDING DIAGRAMS

Note: Hooks and bends shall be in accordance with ACI Manual of Standard Practice for Detailing Reinforced Concrete Structures. (ACI-315-57)

342

HOWARD, NEEDLES, TAMMEN & BERGENDOFF
CONSULTING ENGINEERS
KANSAS CITY NEW YORK

| MADE LJR | DATE 4-3-62 | TRACED | DATE |
|---|---|---|---|
| CHECKED SAH | DATE 4-4-62 | CALC. | |

## BRIDGE: LT. LANE RTE. I-435 OVER RAMPS "G," "H" & "F" & RTE. I-70

STATE ROAD - ROUTES I-435 & I-70 INTERCHANGE
FROM ROUTE 40 TO LEEDS ROAD
PROJECT NO. I-435-1(24)(RTE. I-435) STA. 380+98.46 (LT. LANE)

JACKSON COUNTY



A-993

# MISSOURI STATE HIGHWAY DEPARTMENT

| FED. ROAD DIV. NO. | STATE | FEDERAL PROJECT NO. & SEC. | FISCAL YEAR | SHEET NO. | TOTAL SHEETS |
|---|---|---|---|---|---|
| 5 | MO | | | 74 | |
| DIST. NO. | COUNTY | | | ROUTE | SEC. |
| 4 | JACKSON | | | | |

## BILL OF REINFORCEMENT

| NO. | MARK | LENGTH | SHAPE | LOCATION |
|---|---|---|---|---|
| | | SUPERSTRUCTURE | | |
| 200 | D501 | 10'-6" | | Int. Diaph. |
| 8 | D502 | 11'-8" | | Spec. Diaph. |
| | | | | |
| 56 | D601 | 37'-8" | Str. | End & Int. Diaph. |
| 64 | D602 | 12'-3" | | End Diaph. |
| 16 | D603 | 15'-11" | | End Diaph. |
| 8 | D604 | 9'-1" | | Spec. Diaph. |
| 4 | D605 | 46'-5" | Str. | End Diaph. |
| | | | | |
| 72 | G401 | 27'-0" | Str. | Girder |
| 72 | G402 | 25'-9" | | |
| 84 | G403 | 23'-11" | | |
| 72 | G404 | 26'-10" | | |
| 84 | G405 | 24'-8" | | |
| 96 | G406 | 25'-6" | Str. | Girder |
| | | | | |
| 524 | G501 | 7'-7" | | Girder |
| 2612 | G502 | 7'-7" | | Girder |
| 2608 | G503 | 7'-7" | | Girder |
| 520 | G504 | 7'-7" | | Girder |
| | | | | |
| 18 | G801 | 53'-10" | Str. | Girders |
| 12 | G802 | 39'-0" | | |
| 12 | G803 | 36'-1" | | |
| 18 | G804 | 53'-6" | | |
| 12 | G805 | 38'-7" | | |
| 12 | G806 | 36'-10" | | |
| 8 | G807 | 47'-5" | | |
| 8 | G808 | 46'-5" | | |
| 24 | G809 | 49'-3" | | |
| 8 | G810 | 48'-5" | Str. | Girders |
| | | | | |
| 436 | P401 | 6'-4" | | Parapet |
| 455 | P402 | 6'-8" | | Parapet |
| 18 | P403 | 6'-0" | | Parapet |
| | | | | |
| 8 | P501 | 34'-11" | Str. | Parapet |
| 8 | P502 | 38'-3" | | |
| 16 | P503 | 9'-2" | | |
| 32 | P504 | 9'-8" | | |
| 8 | P505 | 26'-1" | | |
| 32 | P506 | 8'-2" | | |
| 8 | P507 | 25'-0" | | |
| 8 | P508 | 34'-0" | | |
| 8 | P509 | 39'-2" | | |
| 8 | P510 | 36'-3" | | |
| 8 | P511 | 37'-2" | | |
| 8 | P512 | 26'-5" | | |
| 8 | P513 | 25'-4" | | |
| 8 | P514 | 34'-3" | | |
| 8 | P515 | 34'-8" | Str. | Parapet |
| 2 | P516 | 6'-6" | | Lt. Std. Support |
| 2 | P517 | 6'-3" | | |
| 2 | P518 | 6'-0" | | |
| 6 | P519 | 7'-8" | | |
| 4 | P520 | 2'-4" | Str. | |
| 2 | P521 | 5'-9" | | Lt. Std. Support |
| | | | | |
| 2158 | S501 | 23'-1" | Str. | Top Top Slab |
| 4 | S502 | 46'-2" | | Top Top Slab |
| 183 | S503 | 34'-0" | | Bottom Top Slab |
| 183 | S504 | 31'-8" | | |
| 122 | S505 | 35'-9" | | |
| 122 | S506 | 37'-9" | Str. | Bottom Top Slab |

## BILL OF REINFORCEMENT

| NO. | MARK | LENGTH | SHAPE | LOCATION |
|---|---|---|---|---|
| 183 | S507 | 33'-4" | Str. | Bottom Top Slab |
| 122 | S508 | 30'-0" | | Bottom Top Slab |
| 10 | S509 | 44'-0" | | TopSlab-T.&Bot. |
| 2 | S510 | 4'-6" | | Bottom Slab |
| 1074 | S511 | 25'-4" | | Bottom Top Slab |
| 1074 | S512 | 17'-10" | | Bottom Top Slab |
| 4 | S513 | 43'-10" | | Bottom Top Slab |
| 542 | S514 | 37'-8" | | Bottom Slab |
| 2 | S515 | 30'-0" | | |
| 2 | S516 | 21'-6" | | |
| 2 | S517 | 13'-0" | Str. | Bottom Slab |
| | | | | |
| 48 | S601 | 6'-0" | Str. | Bottom Slab |
| | | | | |
| 42 | S801 | 48'-0" | Str. | Bottom Slab |
| 42 | S802 | 40'-3" | | Bottom Slab |
| 49 | S803 | 47'-1" | | Top Top Slab |
| 49 | S804 | 45'-0" | | Top Top Slab |
| 84 | S805 | 43'-3" | | Bottom Slab |
| 42 | S806 | 27'-0" | | Bottom Slab |
| 48 | S807 | 27'-6" | | Top Top Slab |
| 49 | S808 | 18'-0" | | Top Top Slab |
| 49 | S809 | 10'-8" | Str. | Top Top Slab |
| | | | | |
| 98 | S901 | 34'-3" | Str. | Top Top Slab |
| 96 | S902 | 35'-6" | | |
| 98 | S903 | 34'-6" | | |
| 98 | S904 | 30'-8" | | |
| 98 | S905 | 10'-3" | | |
| 49 | S906 | 14'-6" | Str. | Top Top Slab |
| 40 | S1001 | 38'-0" | Str. | Bottom Slab |
| 40 | S1002 | 42'-0" | Str. | Bottom Slab |
| | | | | |
| 50 | S1101 | 43'-0" | Str. | Top Top Slab |
| 98 | S1102 | 30'-0" | | Top Top Slab |
| 20 | S1103 | 12'-8" | | Bottom Slab |
| 50 | S1104 | 36'-0" | | Top Top Slab |
| 49 | S1105 | 28'-0" | | |
| 23 | S1106 | 16'-0" | | |
| 49 | S1107 | 23'-0" | | |
| 23 | S1108 | 13'-0" | | Top Top Slab |
| 122 | S1109 | 60'-0" | | Bottom Slab |
| 84 | S1110 | 56'-0" | | |
| 42 | S1111 | 58'-0" | | |
| 20 | S1112 | 10'-8" | | |
| 84 | S1113 | 38'-0" | Str. | Bottom Slab |
| | | | | |
| 46 | S1401 | 20'-0" | Str. | Top Top Slab |
| | | | | |
| 112 | W401 | 30'-0" | Str. | Curb |
| 8 | W402 | 20'-4" | | |
| 8 | W403 | 8'-9" | | |
| 4 | W404 | 10'-2" | | |
| 4 | W405 | 7'-10" | | |
| 8 | W406 | 18'-9" | | |
| 4 | W407 | 6'-7" | | |
| 8 | W408 | 10'-8" | | |
| 4 | W409 | 4'-8" | Str. | |
| 486 | W410 | 5'-1" | | |
| 455 | W411 | 6'-2" | | |
| 18 | W412 | 2'-0" | Str. | Curb |

## BILL OF REINFORCEMENT

| NO. | MARK | LENGTH | SHAPE | LOCATION |
|---|---|---|---|---|
| | | SUPERSTRUCTURE | | |
| | | INT. BENT 2 | | |
| 52 | B521 | 12'-0" | | Beam |
| 12 | B522 | 3'-6" | Str. | |
| 6 | B621 | 37'-8" | | |
| 8 | B1121 | 41'-1" | | |
| 4 | B1122 | 18'-3" | | |
| 8 | B1123 | 14'-9" | | |
| 4 | B1124 | 37'-8" | | |
| 2 | B1125 | 16'-0" | | |
| 4 | B1126 | 16'-9" | Str. | Beam |
| | | | | |
| 1 | C421 | 1128'-9" | | Column |
| 1 | C422 | 1198'-3" | | |
| 12 | C1021 | 29'-7" | | Column |
| 12 | C1022 | 31'-2" | | Column |
| | | | | |
| | | INT. BENT 3 | | |
| 52 | B531 | 12'-0" | | Beam |
| 12 | B532 | 3'-6" | Str. | |
| 6 | B631 | 37'-8" | | |
| 8 | B1131 | 41'-1" | | |
| 8 | B1132 | 16'-9" | | |
| 4 | B1133 | 16'-3" | | |
| 4 | B1134 | 37'-8" | | |
| 2 | B1135 | 16'-0" | Str. | Beam |
| | | | | |
| 1 | C431 | 1711'-5" | | Column |
| 1 | C432 | 1730'-6" | | |
| 12 | C1031 | 42'-10" | | Column |
| 12 | C1032 | 44'-5" | | Column |
| | | | | |
| | | INT. BENT 4 | | |
| 52 | B541 | 12'-0" | | Beam |
| 12 | B542 | 3'-6" | Str. | |
| 6 | B641 | 37'-8" | | |
| 6 | B1141 | 41'-1" | | |
| 4 | B1142 | 18'-3" | | |
| 4 | B1143 | 14'-9" | | |
| 4 | B1144 | 37'-8" | Str. | Beam |
| | | | | |
| 1 | C441 | 1989'-4" | | Column |
| 1 | C442 | 2058'-5" | | |
| 12 | C1041 | 49'-5" | | |
| 12 | C1042 | 50'-11" | | Column |
| | | | | |
| | | INT. BENT 5 | | |
| 52 | B551 | 12'-0" | | Beam |
| 12 | B552 | 3'-6" | Str. | |
| 6 | B651 | 37'-8" | | |
| 8 | B1151 | 41'-1" | | |
| 8 | B1152 | 16'-9" | | |
| 4 | B1153 | 16'-3" | | |
| 4 | B1154 | 37'-8" | | |
| 2 | B1155 | 16'-0" | Str. | Beam |
| | | | | |
| 1 | C451 | 1953'-9" | | Column |
| 1 | C452 | 2024'-1" | | |
| 12 | C1051 | 48'-4" | | |
| 12 | C1052 | 49'-11" | | Column |

## BILL OF REINFORCEMENT

| NO. | MARK | LENGTH | SHAPE | LOCATION |
|---|---|---|---|---|
| | | INT. BENT 6 | | |
| 52 | B561 | 12'-0" | | Beam |
| 12 | B562 | 3'-6" | Str. | |
| 6 | B661 | 37'-8" | | |
| 8 | B1161 | 41'-1" | | |
| 4 | B1162 | 18'-3" | | |
| 8 | B1163 | 14'-9" | | |
| 4 | B1164 | 37'-8" | | |
| 2 | B1165 | 16'-0" | | |
| 4 | B1166 | 16'-9" | Str. | Beam |
| | | | | |
| 1 | C461 | 1896'-1" | | Column |
| 1 | C462 | 1965'-7" | | |
| 12 | C1061 | 46'-11" | | Column |
| 12 | C1062 | 48'-7" | | Column |

Note
Hooks and bends shall be in accordance with ACI Manual of Standard Practice for Detailing Reinforced Concrete Structures. (ACI-315-57)

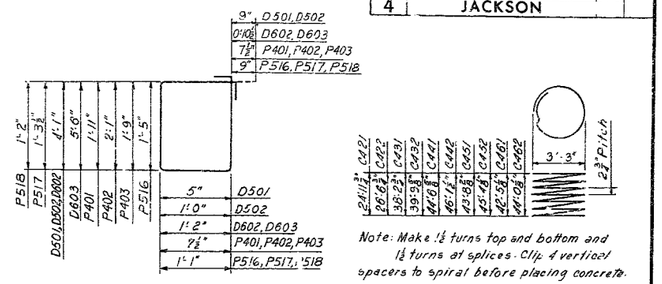


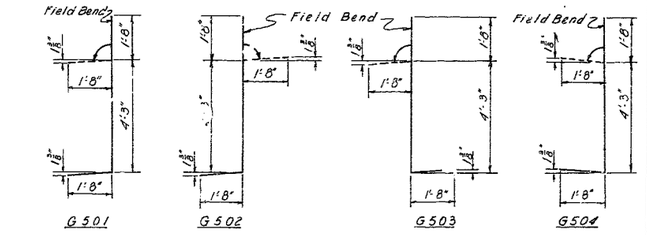


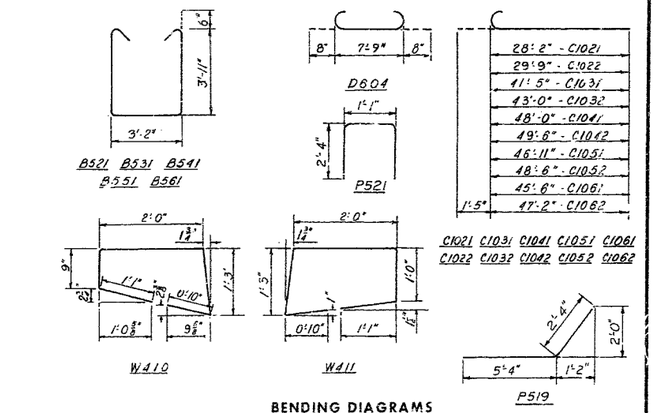


## BENDING DIAGRAMS

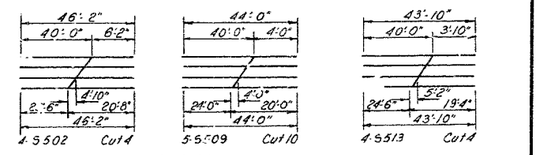


## CUTTING DIAGRAMS

# BRIDGE: LT. LANE RTE. I-435 OVER RAMPS "G," "H" & "F" & RTE. I-70

STATE ROAD - ROUTES I-435 & I-70 INTERCHANGE
FROM ROUTE 40 TO LEEDS ROAD
PROJECT NO. I-435-1(24)(RTE. I-435) STA. 380+98.46 (LT. LANE)

## JACKSON COUNTY

A-993

343

HOWARD, NEEDLES, TAMMEN & BERGENDOFF
CONSULTING ENGINEERS
KANSAS CITY NEW YORK

| | | | |
|---|---|---|---|
| MADE LJR | DATE 3-13-62 | TRACED | DATE |
| CHECKED CGP | DATE 3-14-62 | SCALE | |

SHEET 4 OF 17

NO CONSTRUCTION CHANGES

# MISSOURI STATE HIGHWAY DEPARTMENT

| FED. ROAD DIV. NO. | STATE | FEDERAL PROJECT NO. & SEC. | FISCAL YEAR | SHEET NO. | TOTAL SHEETS |
|---|---|---|---|---|---|
| 5 | MO | | | 1 | 17 |
| DIST. NO. | COUNTY | | ROUTE | SEC. | |
| 4 | JACKSON | | | | |

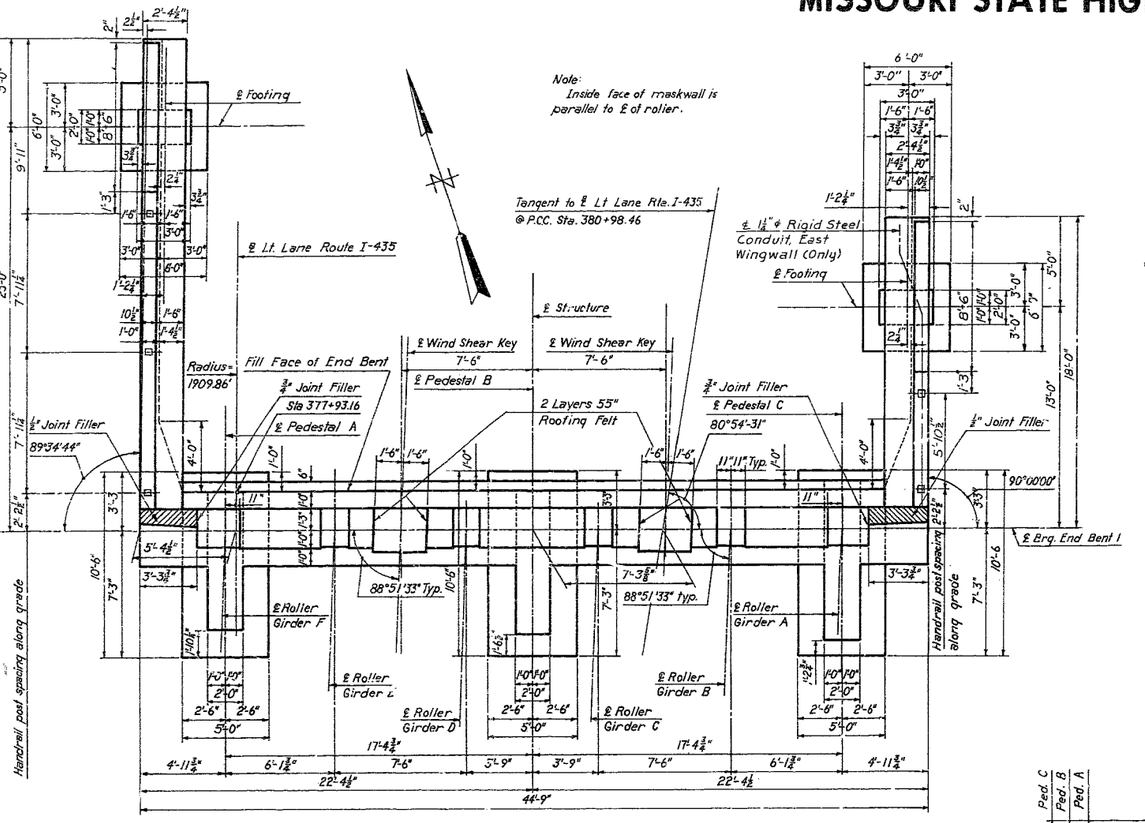


PLAN

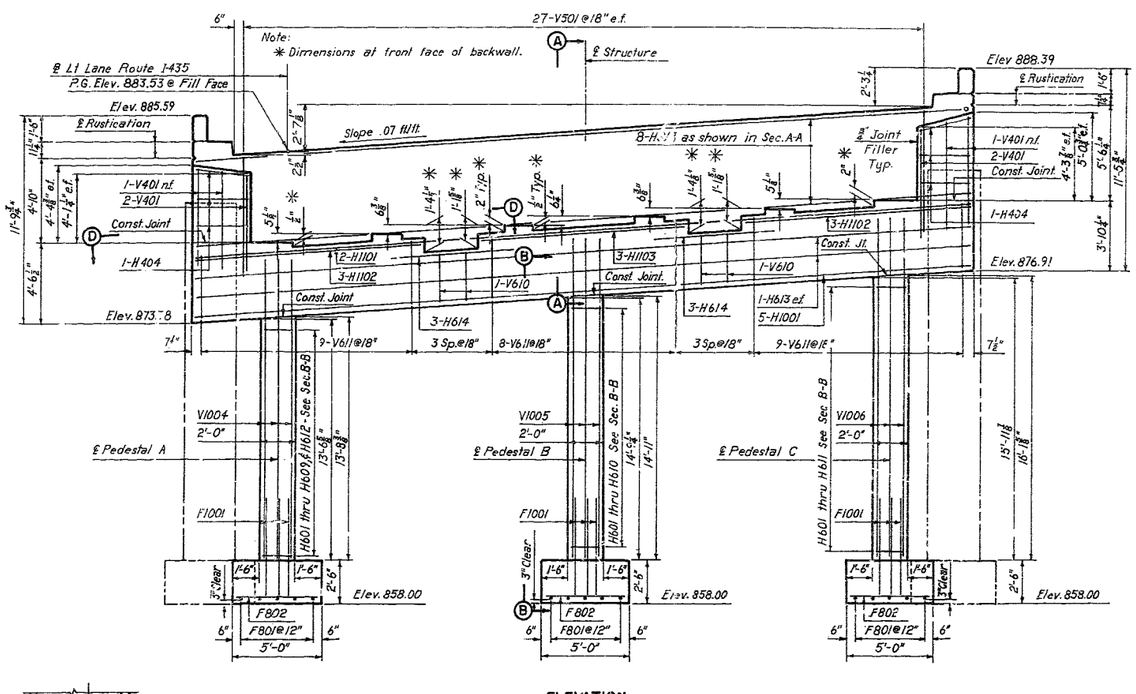


ELEVATION

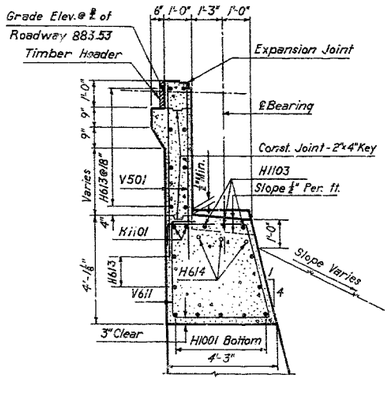


SECTION A-A

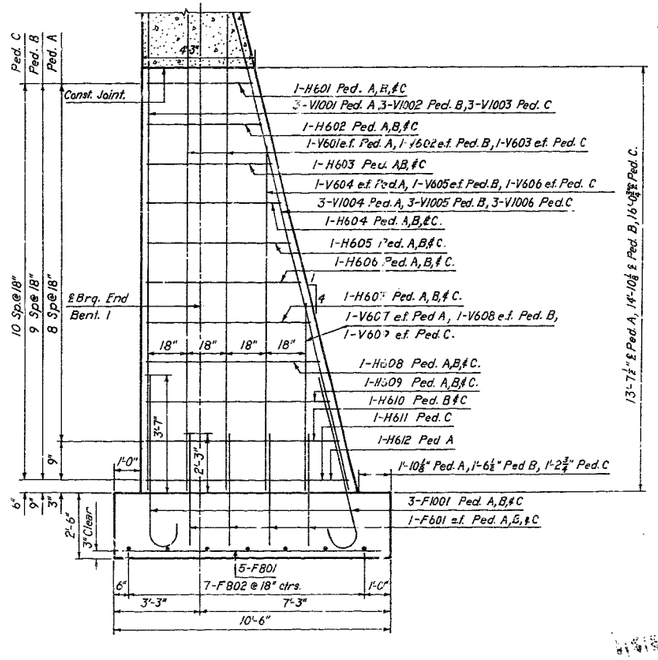


SECTION B-B

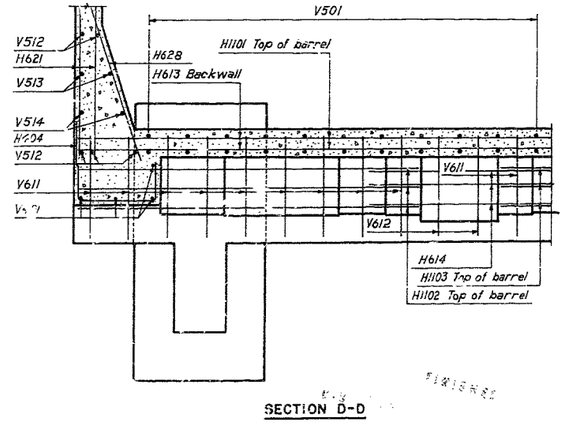


SECTION D-D

**LEGEND**
n.f. = near face
e.f. = each face
f.f. = far face
Ped = pedestal

Note: Dimensions to surfaces receiving joint filler are to face of concrete.

DETAILS END BENT 1

# BRIDGE: LT. LANE RTE. I-435 OVER RAMPS "G," "H" & "F" & RTE. I-70

STATE ROAD - ROUTES I-435 & I-70 INTERCHANGE
FROM ROUTE 40 TO LEEDS ROAD
PROJECT NO. I-435-1(24)(RTE. I-435) STA. 380+98.46 (LT. LANE)

**JACKSON COUNTY**

HOWARD, NEEDLES, TAMMEN & BERGENDOFF
CONSULTING ENGINEERS
KANSAS CITY NEW YORK

| MADE L.J.R | DATE 2-5-62 | TRACED | DATE |
|---|---|---|---|
| CHECKED S.R.L | DATE 3-6-62 | SCALE | |

NOTE: This drawing is not to scale. Follow dimensions.

SHEET 5 OF 17

A-993

344

SEE FINAL PLANS BROWN-LINES

# MISSOURI STATE HIGHWAY DEPARTMENT

| FED. HWY. DIV. NO. | STATE | FEDERAL PROJECT NO. & SEC. | FISCAL YEAR | SHEET NO. | TOTAL SHEETS |
|---|---|---|---|---|---|
| 5 | MO | | | 7 | 0 |
| DIST. NO. | COUNTY | | ROUTE | SEC. | |
| 4 | JACKSON | | | | |

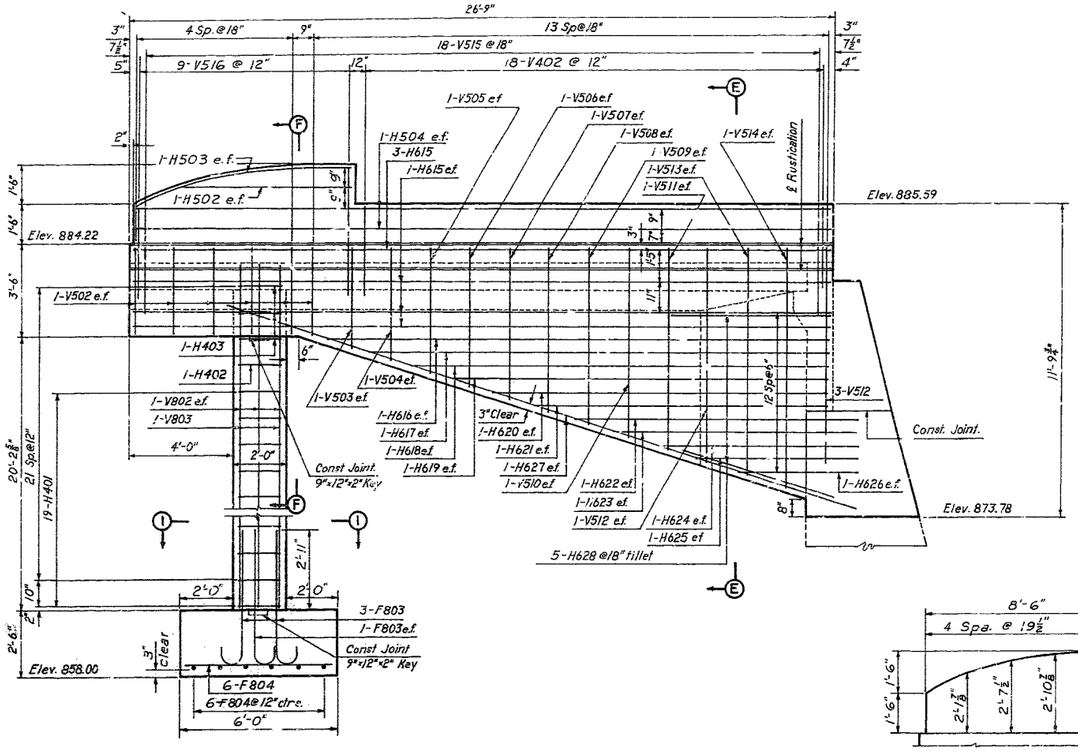


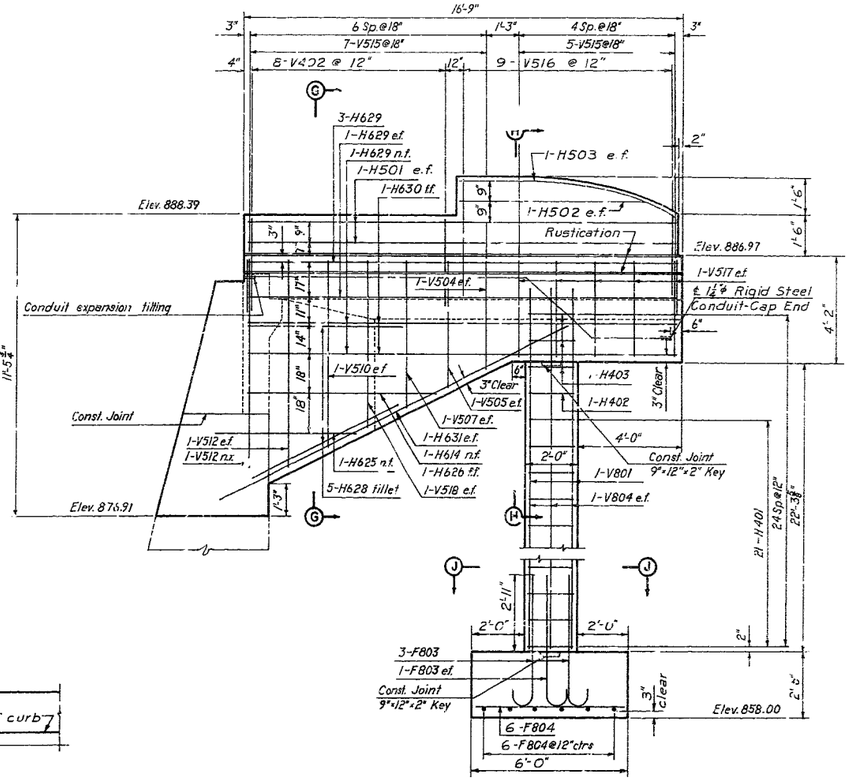


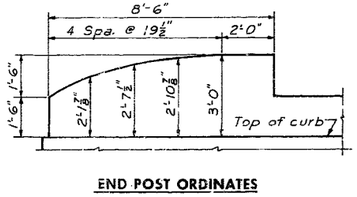


END POST ORDINATES

WEST WINGWALL ELEVATION

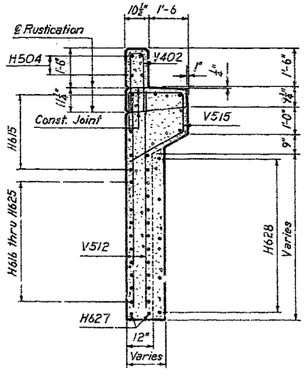


SECTION E-E

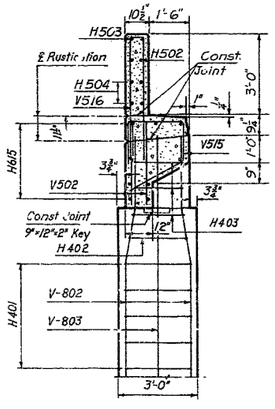


SECTION F-F

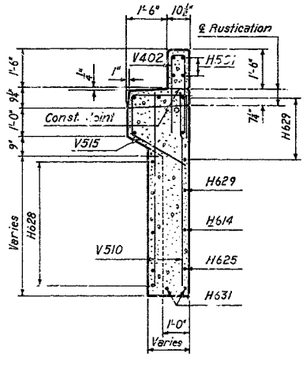


SECTION G-G

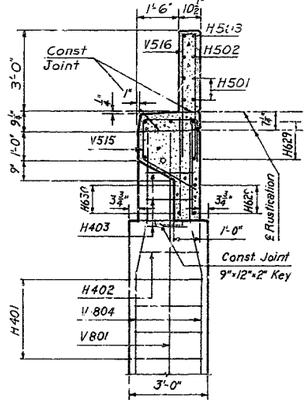


SECTION H-H

EAST WINGWALL ELEVATION

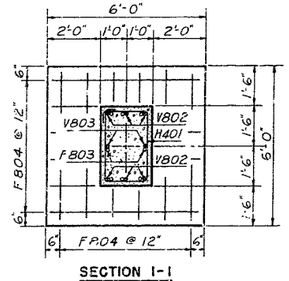


SECTION I-I
(Section J-J Similar)

LEGEND
n.f. = near face
f.f. = far face
e.f. = each face

HOWARD, NEEDLES, TAMMEN & BERGENDOFF
CONSULTING ENGINEERS
KANSAS CITY NEW YORK

| MADE L.J.R. | DATE 2-5-62 | TRACED | DATE |
|---|---|---|---|
| CHECKED S.A.L. | DATE 3-6-62 | SCALE | |

NOTE: This drawing is not to scale. Follow dimensions.

DETAILS END BENT 1

**BRIDGE: LT. LANE RTE. I-435 OVER RAMPS "G," "H" & "F" & RTE. I-70**

STATE ROAD - ROUTES I-435 & I-70 INTERCHANGE
FROM ROUTE 40 TO LEEDS ROAD
PROJECT NO. I-435-1(24)(RTE. I-435) STA. 380+98.46 (LT. LANE)

**JACKSON COUNTY**

SHEET 6 OF 17

A-993

345

SEE FINAL PLANS BROWN-LINES

# MISSOURI STATE HIGHWAY DEPARTMENT

| FED. ROAD DIST. NO. | STATE | FEDERAL PROJECT NO. & SEC. | FISC. YEAR | 12-DIGIT NO. | TOTAL SHEETS |
|---|---|---|---|---|---|
| 5 | MO | | | 77 | |
| DIST. NO. | COUNTY | | ROUTE | SEC. | |
| 4 | JACKSON | | | | |

346

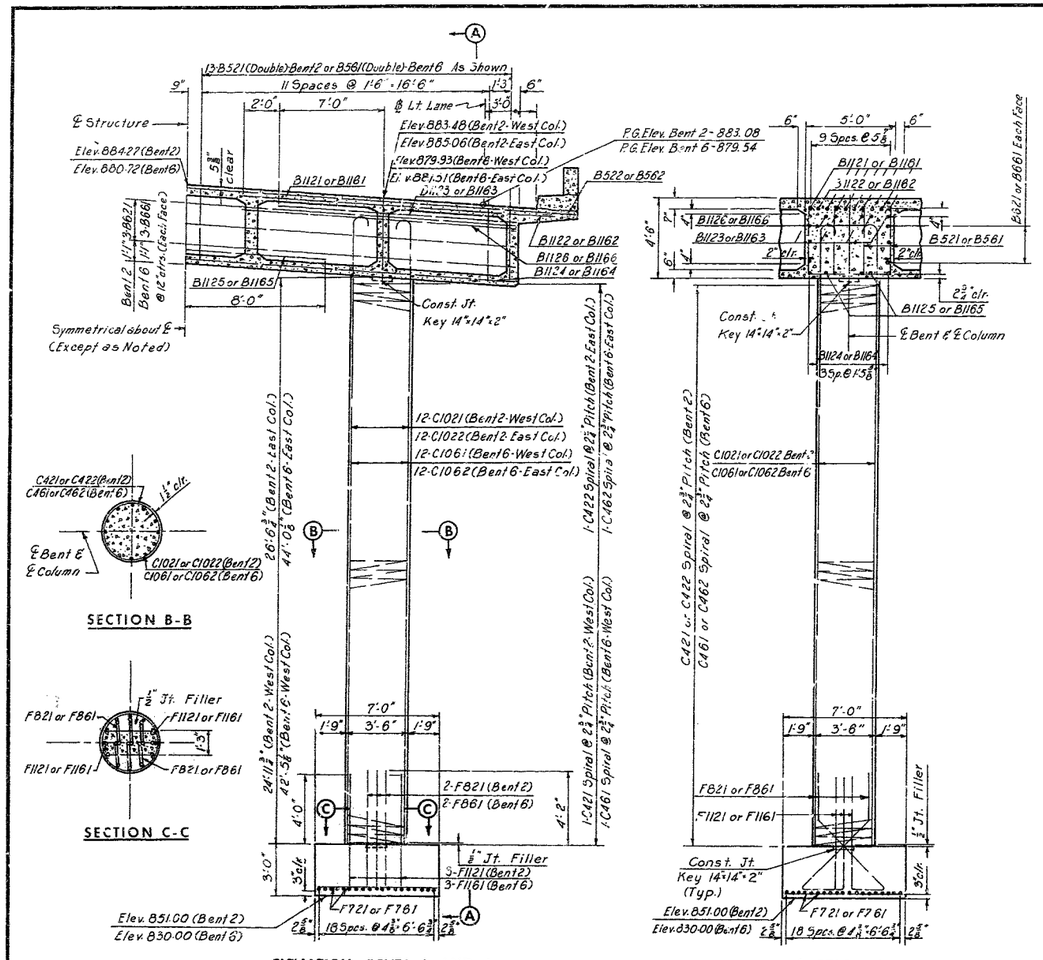


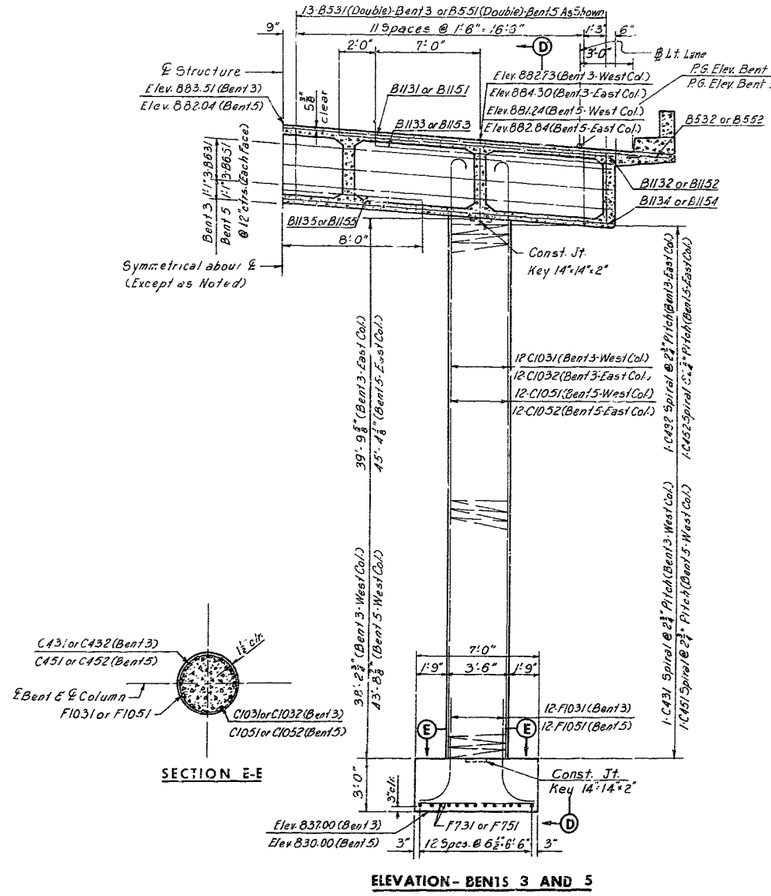


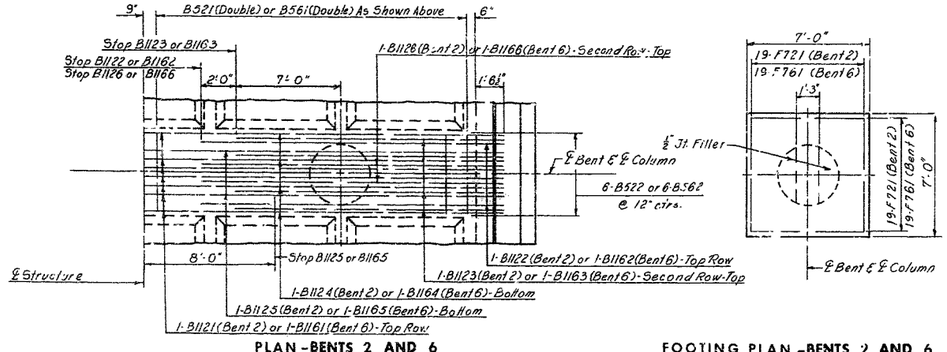


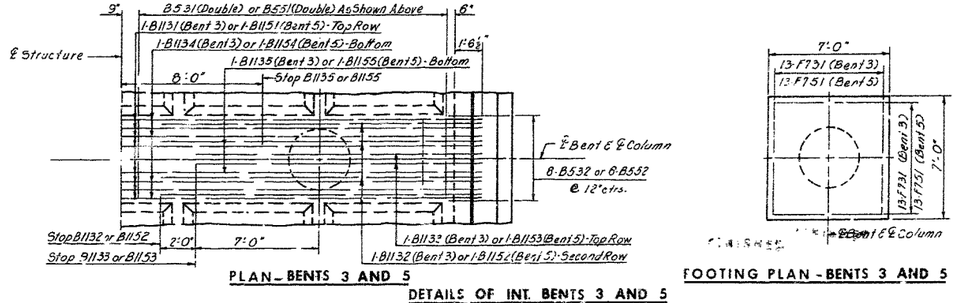


HOWARD, NEEDLES, TAMMEN & BERGENDOFF
CONSULTING ENGINEERS
KANSAS CITY NEW YORK

| MADE S.A.L. | DATE 1-25-62 | TRACED | DATE |
|---|---|---|---|
| CHECKED J.L.W. | DATE 2-27-62 | SCALE | |

NOTE: This drawing is not to scale. Follow dimensions.

## BRIDGE: LT. LANE RTE. I-435 OVER RAMPS "G," "H" & "F" & RTE. I-70

STATE ROAD - ROUTES I-435 & I-70 INTERCHANGE
FROM ROUTE 40 TO LEEDS ROAD
PROJECT NO. I-435-1(24)(RTE. I-435) STA. 380+98.46 (LT. LANE)

JACKSON COUNTY

SHEET 7 OF 17

A-993

NO CONSTRUCTION CHANGES

# MISSOURI STATE HIGHWAY DEPARTMENT

| FED. ROAD DIV. NO. | STATE | FEDERAL PROJECT NO. & SEC. | FISCAL YEAR | SHEET NO. | TOTAL SHEETS |
|---|---|---|---|---|---|
| 5 | MO | | | 78 | |
| DIST. NO. | COUNTY | | ROUTE | SEC. | |
| 4 | JACKSON | | | | |

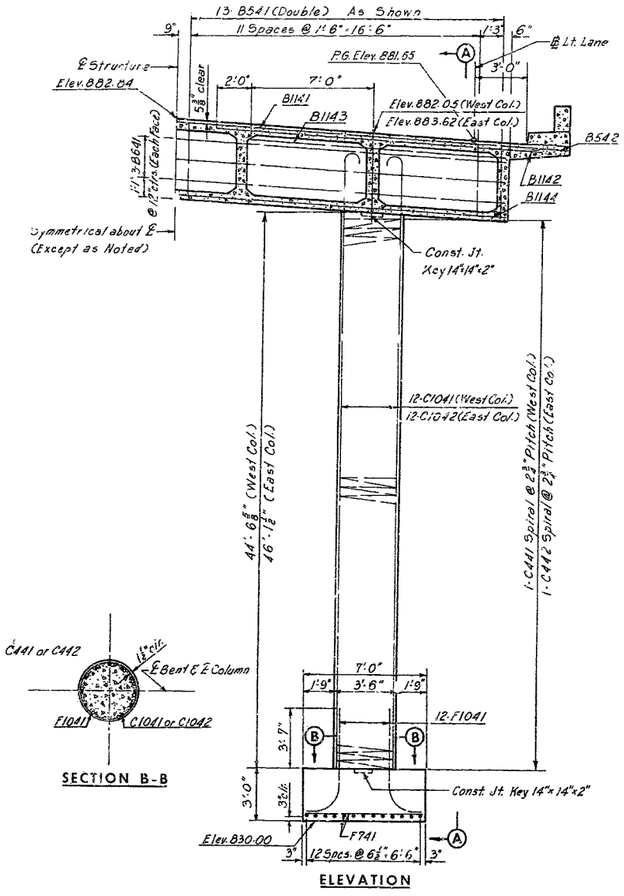


ELEVATION

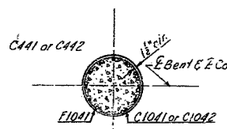


SECTION B-B

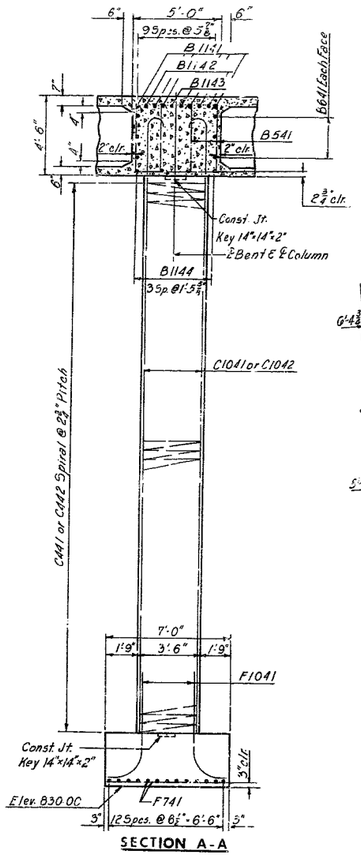


SECTION A-A

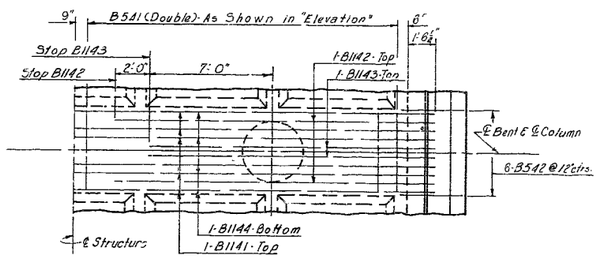


PLAN

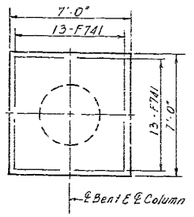


FOOTING PLAN

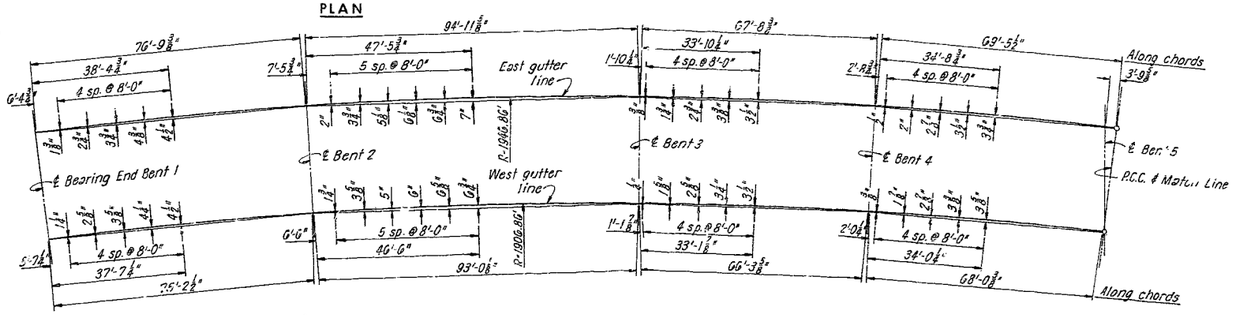


PLAN OF SLAB SHOWING CURVE OFFSETS

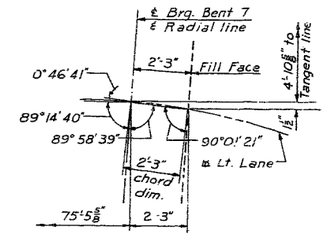


DETAIL D

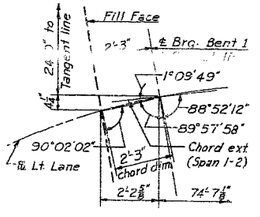


DETAIL C

DETAILS OF INT BENT 4

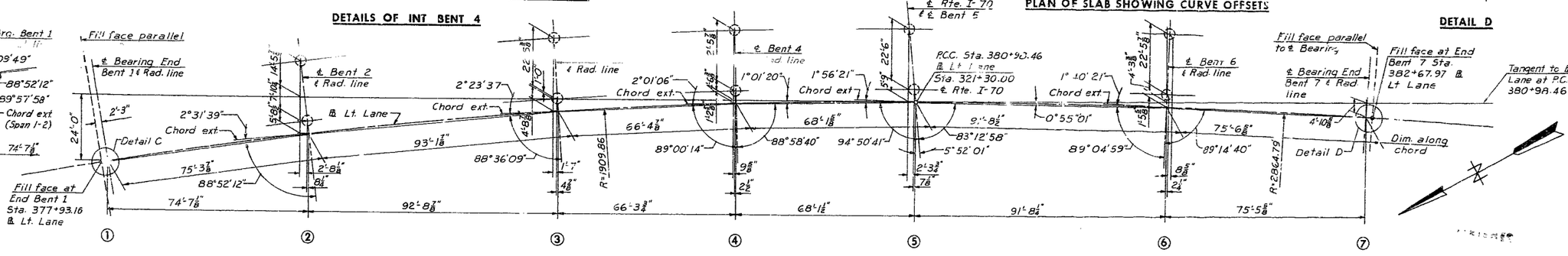


Note: All dimensions shown are horizontal

LAYOUT DATA FOR SUBSTRUCTURE

**BRIDGE: LT. LANE RTE. I-435 OVER RAMPS "G," "H" & "F" & RTE. I-70**

STATE ROAD - ROUTES I-435 & I-70 INTERCHANGE
FROM ROUTE 40 TO LEEDS ROAD
PROJECT NO. I-435-1(24)(RTE. I-435) STA. 380+98.46 (LT. LANE)

**JACKSON COUNTY**

HOWARD, NEEDLES, TAMMEN & BERGENDOFF
CONSULTING ENGINEERS
KANSAS CITY NEW YORK

MADE S.H.J. E.L.W. DATE 2-13-62 TRACED DATE
CHECKED L.J.R. E.J.H. DATE 2-16-62 SCALE

NOTE: This drawing is not to scale. Follow dimensions.

SHEET 8 OF 17

A-993

347

NO CONSTRUCTION CHANGES

# MISSOURI STATE HIGHWAY DEPARTMENT

| FED. ROAD DIST. NO. | STATE | FEDERAL PROJECT NO. & SEC. | FISCAL YEAR | SHEET NO. | TOTAL SHEETS |
|---|---|---|---|---|---|
| 5 | MO | | | 79 | |
| DIST. NO. | COUNTY | | ROUTE | SEC. | |
| 4 | JACKSON | | | | |

348

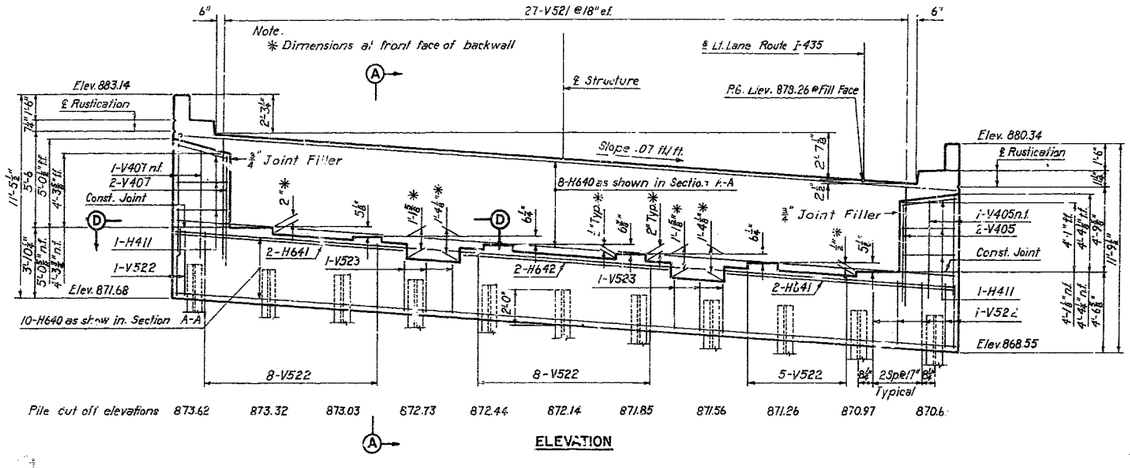


ELEVATION

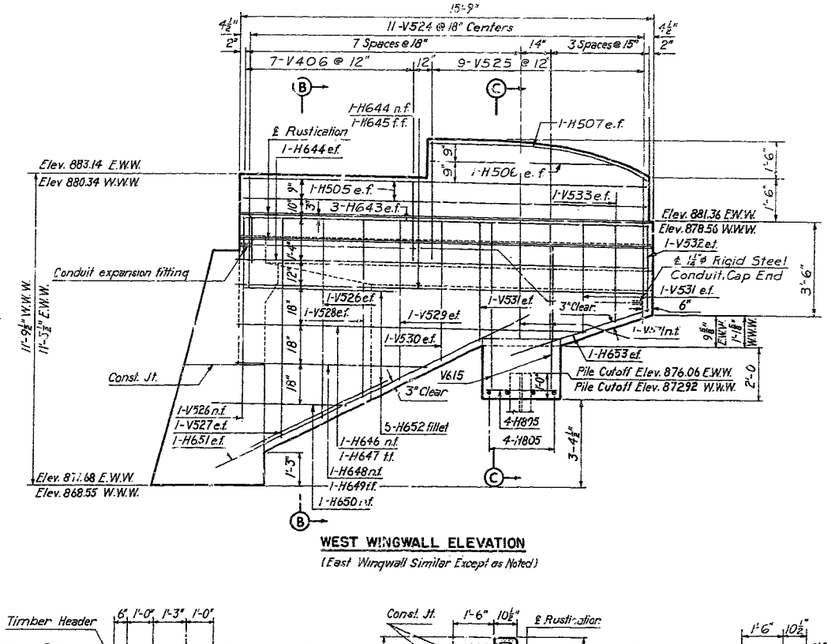


WEST WINGWALL ELEVATION

(East Wingwall Similar Except as Noted)

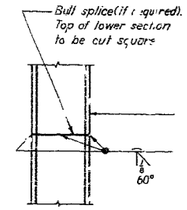


STEEL PILE SPLICE DETAIL

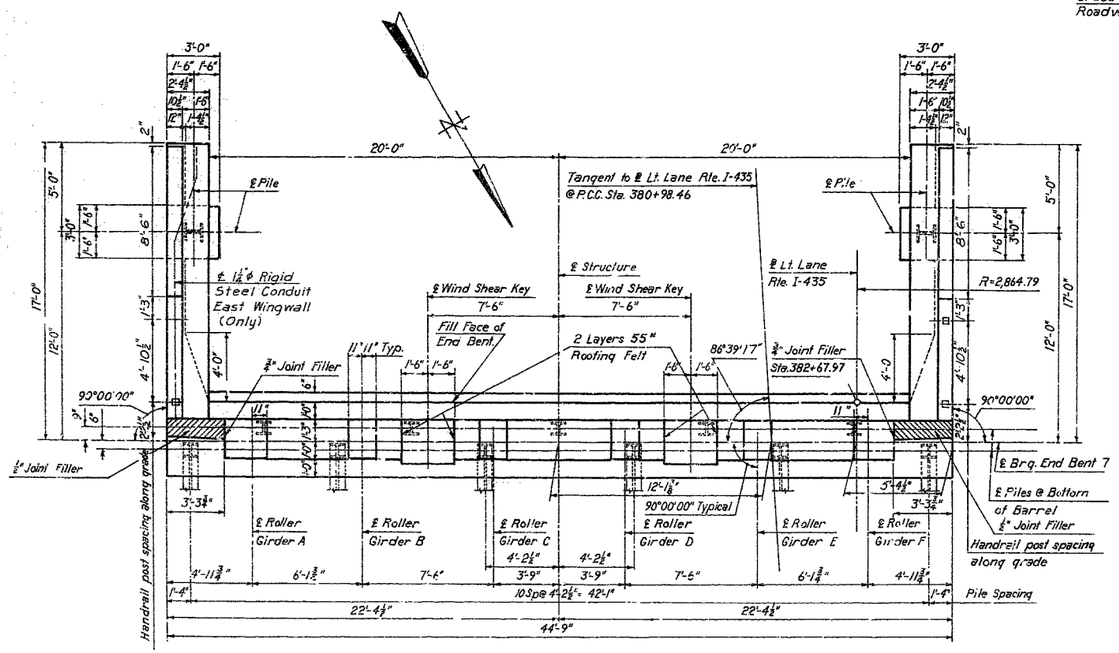


PLAN

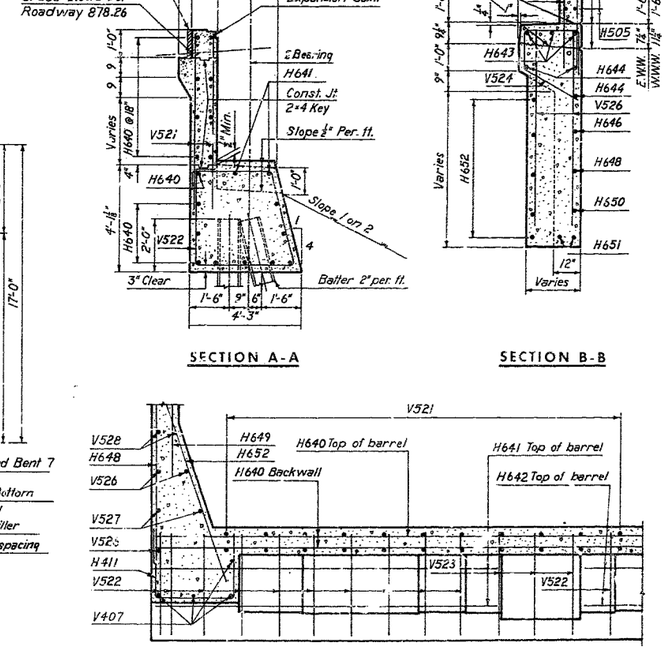


SECTION A-A

SECTION B-B

SECTION C-C

LEGEND

W.W.W. = West wingwall
E.W.W. = East wingwall
n.f. = Near face
f.f. = Far face
e.f. = Each face




SECTION D-D

Note:
All piles are 10BP42
Dimensions to surfaces receiving joint filler are to face of concrete.

DETAILS END BENT 7

HOWARD, NEEDLES, TAMMEN & BERGENDOFF
CONSULTING ENGINEERS
KANSAS CITY NEW YORK

MADE L.J.R. DATE 1-24-62 | TRACED DATE
CHECKED S.A.L. DATE 3-2-62 | SCALE

NOTE: This drawing is not to scale. Follow dimensions.

## BRIDGE: LT. LANE RTE. I-435 OVER RAMPS "G," "H" & "F" & RTE. I-70

STATE ROAD - ROUTES I-435 & I-70 INTERCHANGE
FROM ROUTE 40 TO LEEDS ROAD
PROJECT NO. I-435-1(24)(RTE. I-435) STA. 380+98.46 (LT. LANE)

JACKSON COUNTY

SHEET 9 OF 17

A-993

NO CONSTRUCTION CHANGES

# MISSOURI STATE HIGHWAY DEPARTMENT

| FED. ROAD DIV. NO. | STATE | FEDERAL PROJECT NO. & SEC. | FISCAL YEAR | SHEET NO. | TOTAL SHEETS |
|---|---|---|---|---|---|
| 5 | MO | | | 10 | |
| DIST. NO. | COUNTY | | ROUTE | SEC. | |
| 4 | JACKSON | | | | |

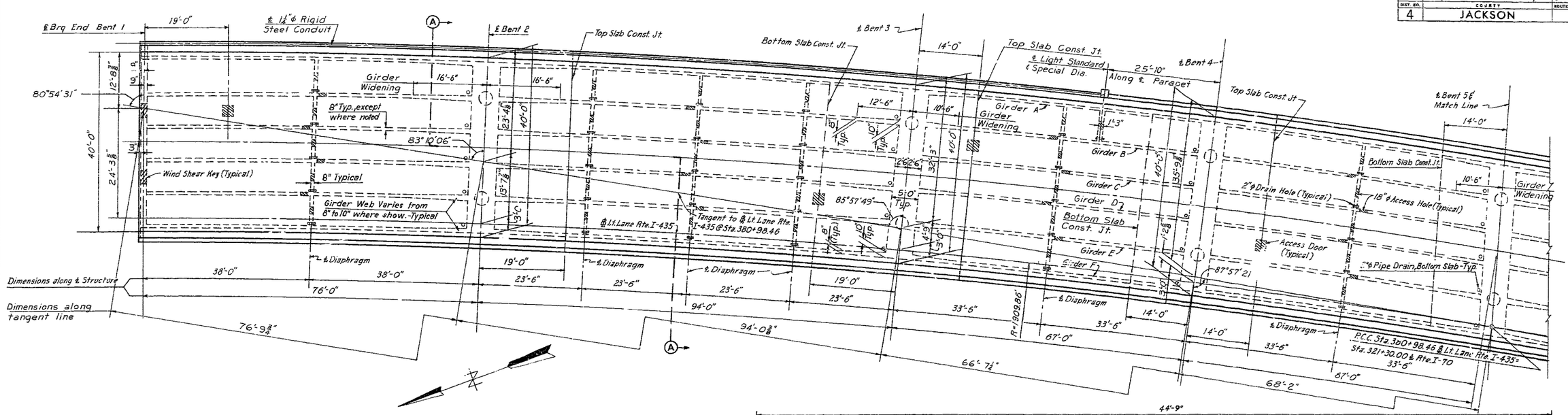


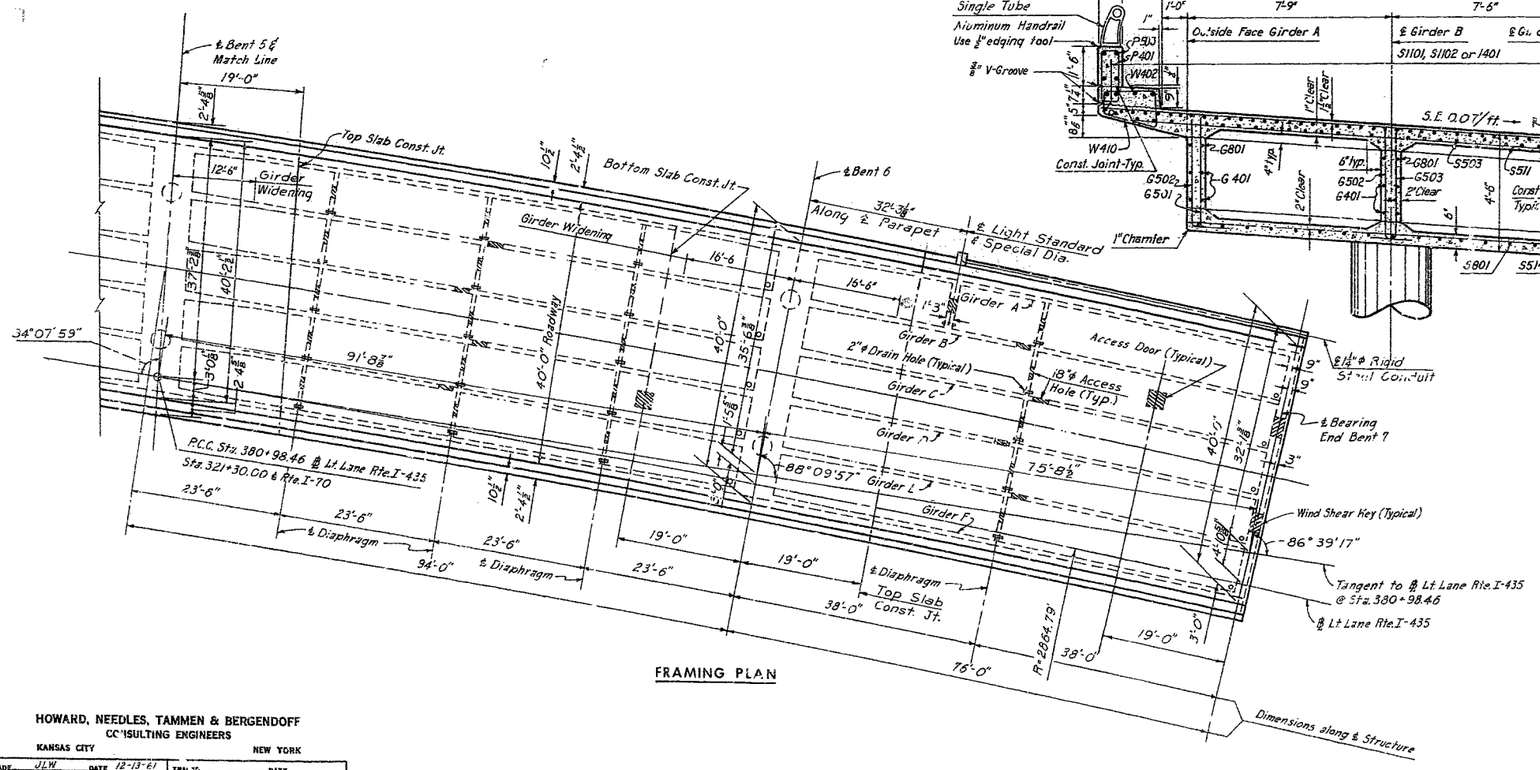


HOWARD, NEEDLES, TAMMEN & BERGENDOFF
CONSULTING ENGINEERS
KANSAS CITY NEW YORK

| | | | |
|---|---|---|---|
| MADE | J.L.W. | DATE | 12-13-61 |
| CHECKED | C.G.P. | DATE | 3-8-62 |
| TRAC'D | | DATE | |
| SCALE | | | |

NOTE: This drawing is not to scale. Follow dimensions.

## BRIDGE: LT. LANE RTE. I-435 OVER RAMPS "G," "H" & "F" & RTE. I-70

STATE ROAD - ROUTES I-435 & I-70 INTERCHANGE
FROM ROUTE 40 TO LEEDS ROAD
PROJECT NO. I-435-1(24)(RTE. I-435) STA. 380+98.46 (LT. LANE)

**JACKSON COUNTY**

SHEET 10 OF 17

A-993

349

# MISSOURI STATE HIGHWAY DEPARTMENT

| FED. ROAD DIV. NO. | STATE | FEDERAL PROJECT NO. & SEC. | FISCAL YEAR | SHEET NO. | TOTAL SHEETS |
|---|---|---|---|---|---|
| 5 | MO | | | 21 | |
| DIST. NO. | COUNTY | | | ROUTE | SEC. |
| 4 | JACKSON | | | | |

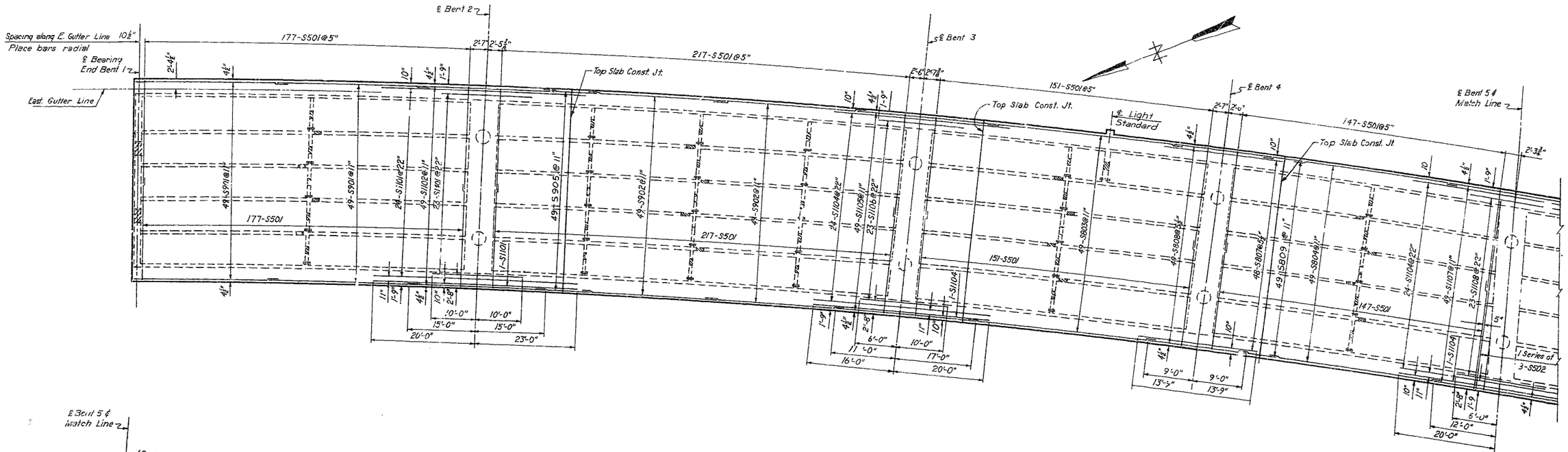


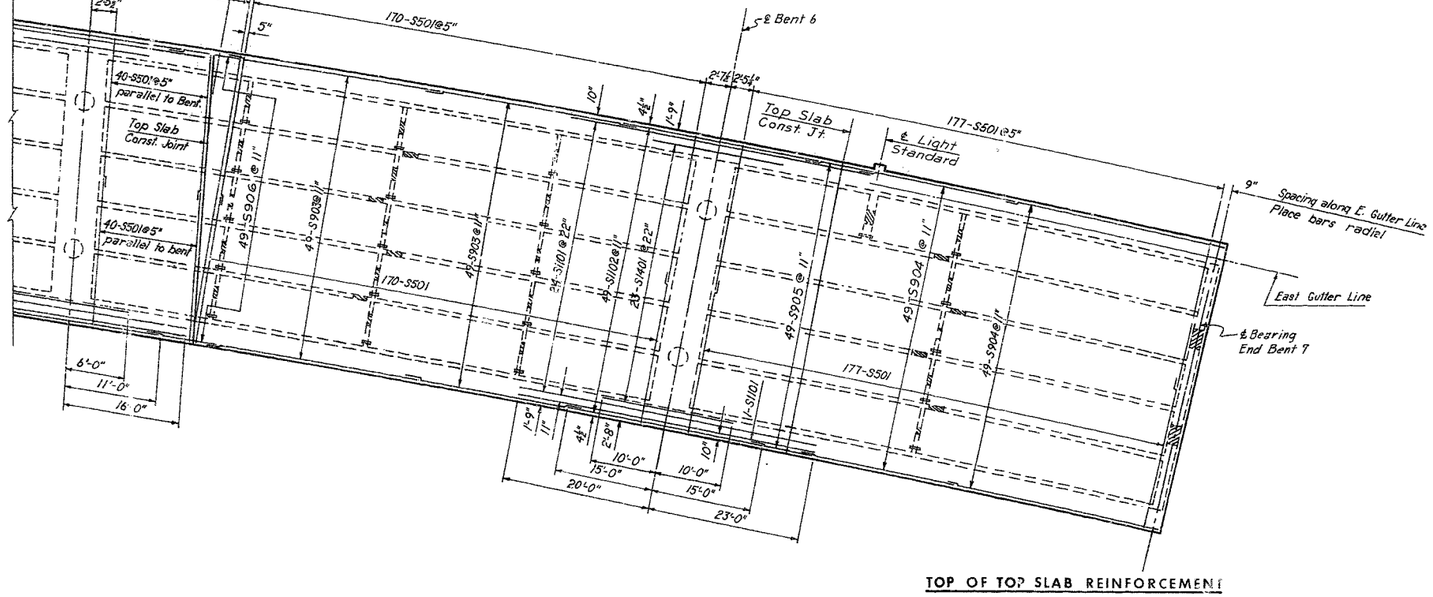


TOP OF TOP SLAB REINFORCEMENT

Note:
All dimensions are horizontal
Lap No. 5 bars 1'-8".
Lap No. 8 bars a minimum of 2'-8"

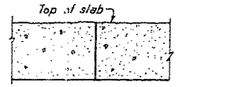


UNDER CURB

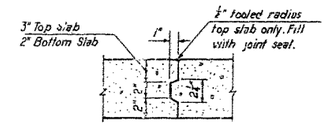


TRANSVERSE SLAB

CONSTRUCTION JOINTS

## BRIDGE: LT. LANE RTE. I-435 OVER RAMPS "G," "H" & "F" & RTE. I-70

STATE ROAD - ROUTES I-435 & I-70 INTERCHANGE
FROM ROUTE 40 TO LEEDS ROAD
PROJECT NO. I-435-1(24)(RTE. I-435) STA. 380+98.46 (LT. LANE)

JACKSON COUNTY

HOWARD, NEEDLES, TAMMEN & BERGENDOFF
CONSULTING ENGINEERS
KANSAS CITY NEW YORK

| | | | |
|---|---|---|---|
| MADE LJR | DATE 2-22-62 | TRACED | DATE |
| CHECKED CGP | DATE 3-8-62 | SCALE | |

NOTE: This drawing is not to scale. Follow dimensions.

SHEET 11 OF 17

A-993

350

# MISSOURI STATE HIGHWAY DEPARTMENT

| FED. ROAD DIV. NO. | STATE | FEDERAL PROJECT NO. & SEC. | FISCAL YEAR | SHEET NO. | TOTAL SHEETS |
|---|---|---|---|---|---|
| 5 | MO | | | 82 | |
| DIST. NO. | | COUNTY | | ROUTE | SEC. |
| 4 | | JACKSON | | | |

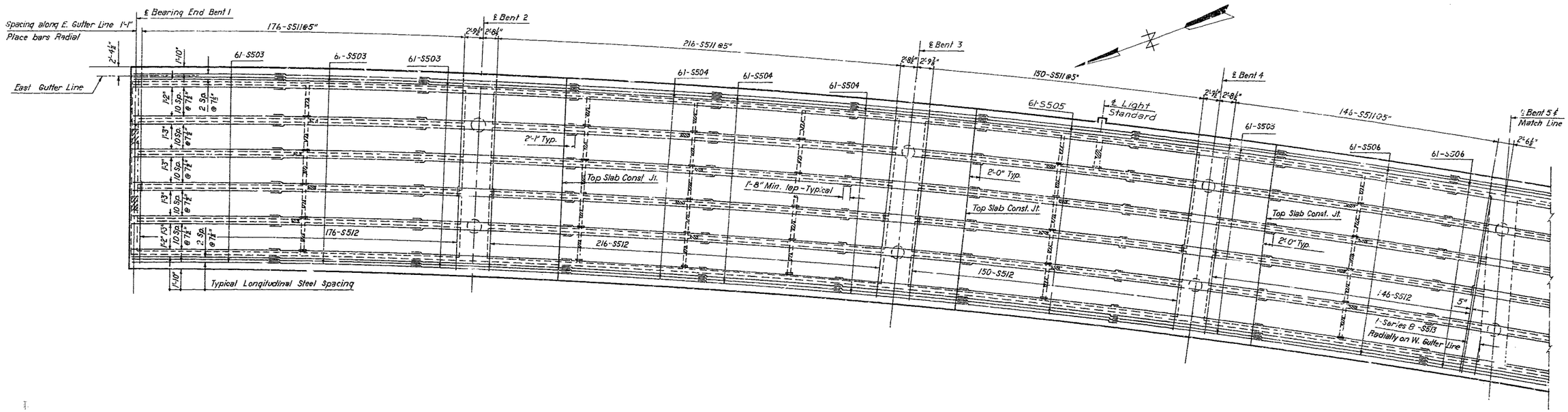


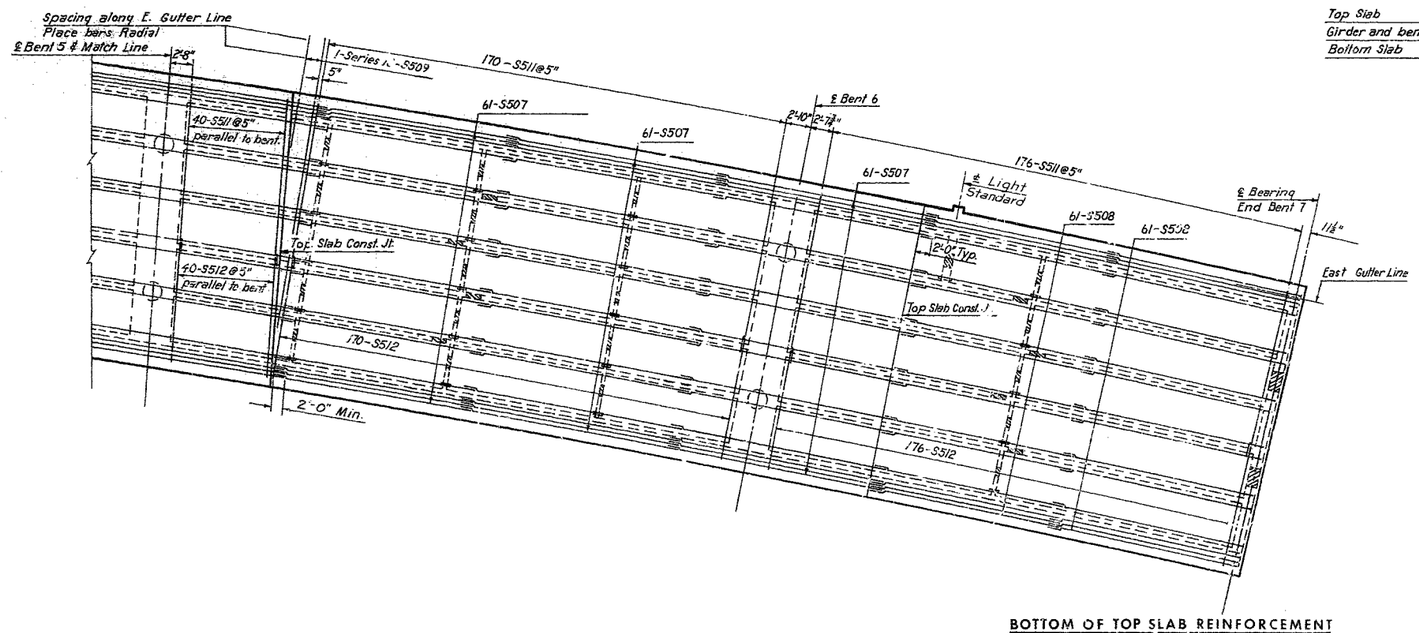


BOTTOM OF TOP SLAB REINFORCEMENT

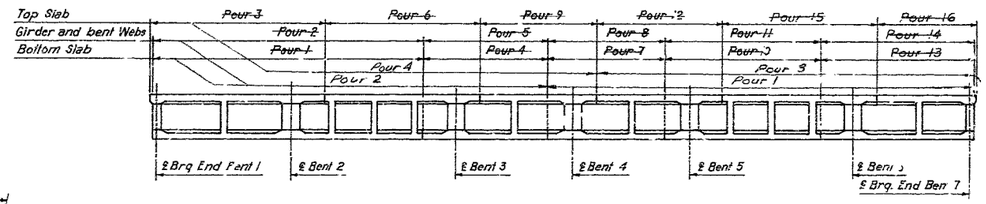


**POURING SEQUENCE**

Pouring Roadway Slabs

No longitudinal construction joints will be permitted unless shown on plans. The contractor shall use an approved oscillating screed type, self-propelled mechanical finisher ~~and shall observe the basic pouring sequence unless he can demonstrate to the satisfaction of the engineer that he is equipped to pour and satisfactorily finish the roadway slabs at a rate which will permit the combining of such of the basic pours as may be specifically designated by the engineer and not required for design reasons. With use of forms and falsework meeting the approval of the engineer,~~ the girder webs and diaphragms may be poured with the bottom slab section on which they bear.

Note:
All dimension are horizontal.
Lap No. 5 bars 1'-8" Minimum.

Note:
All forms are to be removed from the interior of box girders except top slab forms as indicated in Sec. 53.4.2.4 of the Standard Specification.

## BRIDGE: LT. LANE RTE. I-435 OVER RAMPS "G," "H" & "F" & RTE. I-70

STATE ROAD - ROUTES I-435 & I-70 INTERCHANGE
FROM ROUTE 40 TO LEEDS ROAD
PROJECT NO. I-435-1(24)(RTE. I-435) STA. 380+98.46 (LT. LANE)

**JACKSON COUNTY**

HOWARD, NEEDLES, TAMMEN & BERGENDOFF
CONSULTING ENGINEERS
KANSAS CITY NEW YORK

| MADE L.J.R. | DATE 2-21-62 | TRACED | DATE |
|---|---|---|---|
| CHECKED CGP | DATE 3-8-62 | SCALE | |

NOTE: This drawing is not to scale. Follow dimensions.

SHEET 12 OF 17

A-993

351

# MISSOURI STATE HIGHWAY DEPARTMENT

| FED. ROAD DIV. NO. | STATE | FEDERAL PROJECT NO. & SEC. | FISCAL YEAR | SHEET NO. | TOTAL SHEETS |
|---|---|---|---|---|---|
| 5 | MO | | | 13 | |
| DIST. NO. | COUNTY | | ROUTE | SEC. | |
| 4 | JACKSON | | | | |

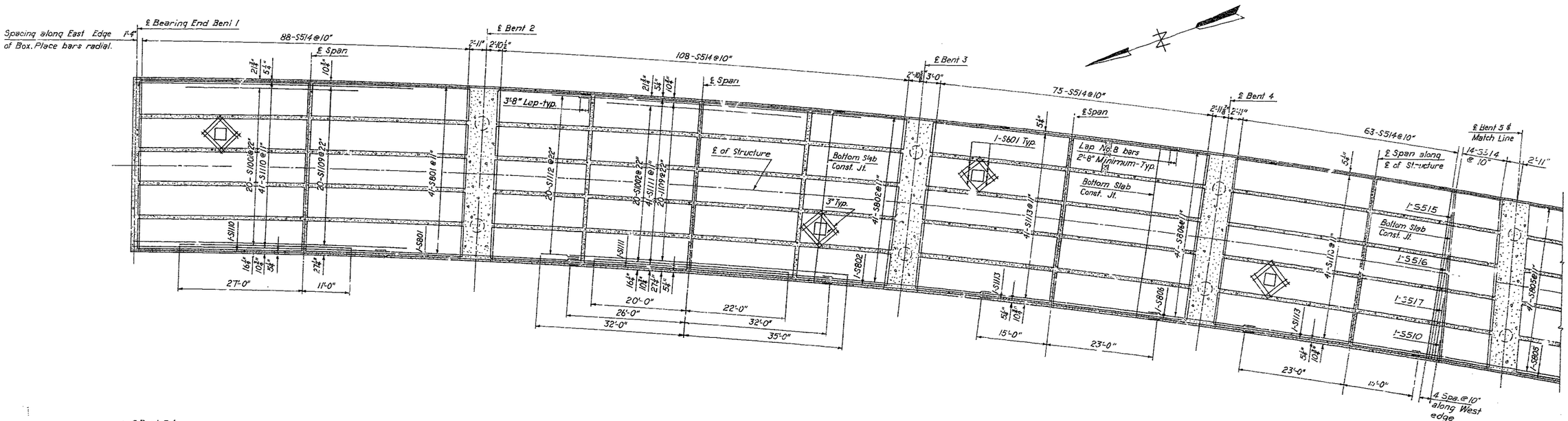


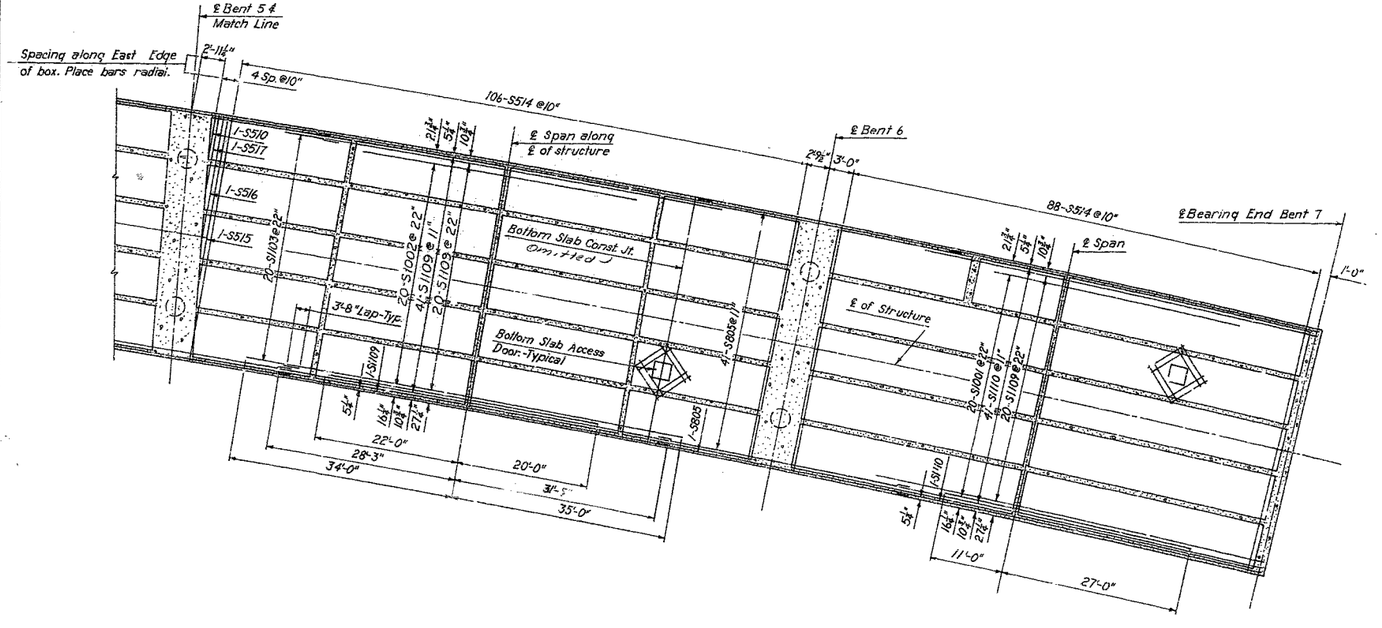


BOTTOM SLAB REINFORCEMENT

Note:
Bend or cut bars in the field to miss access doors.
Dimensions are horizontal.

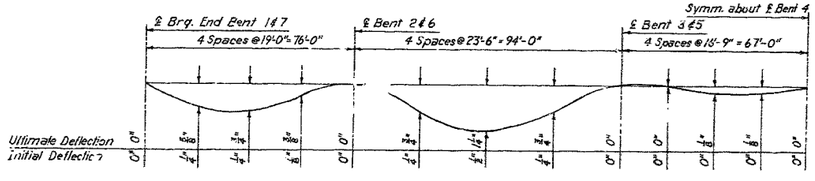


DEAD LOAD DEFLECTION DIAGRAM

Note:
Forms shall be constructed for ultimate deflection.

352

HOWARD, NEEDLES, TAMMEN & BERGENDOFF
CONSULTING ENGINEERS
KANSAS CITY NEW YORK

| | | | |
|---|---|---|---|
| MADE L.J.R. | DATE 2-20-62 | TRACED | DATE |
| CHECKED J.G.P. | DATE 3-6-62 | SCALE | |

NOTE: This drawing is not to scale. Follow dimensions.

## BRIDGE: LT. LANE RTE. I-435 OVER RAMPS "G," "H" & "F" & RTE. I-70

STATE ROAD - ROUTES I-435 & I-70 INTERCHANGE
FROM ROUTE 40 TO LEEDS ROAD
PROJECT NO. I-435-1(24)(RTE. I-435) STA. 380+98.46 (LT. LANE)

**JACKSON COUNTY**

SHEET 13 OF 17

A-993

# MISSOURI STATE HIGHWAY DEPARTMENT

| FED. ROAD DIV. NO. | STATE | FEDERAL PROJECT NO. & SEC. | FISCAL YEAR | SHEET NO. | TOTAL SHEETS |
|---|---|---|---|---|---|
| 5 | MO | | | 84 | |
| DIST. NO. | COUNTY | | | ROUTE | SEC. |
| 4 | JACKSON | | | | |

℄ Bearing End Bent 1 — Access hole girders C℄E — Access hole girders B℄D — ℄ Bent 2 — Access hole girders B℄D — Access hole girders C℄E — ℄ Bent 3 — Access hole girders B℄D — Access hole girders C℄E — ℄ Bent 4 — Access hole girders B℄D — Access hole girders C℄E — ℄ Bearing End Bent 5

Const. Joint — Const. Joint — Const. Joint — Const. Joint

℄ Bent 5℄ Match Line

Along ℄ Girder A — 76'-8 3/8" — 94'-10 7/8" — 67'-7 3/8" — 65'-7"

Longitudinal reinforcing — 2-G801 — 2-G801 — 2-G801 — 2-G802 — 2-G802 — 2-G802 — 2-G803 — 2-G803

Stirrup spacing — 4-G401 — 4-G402 — 4-G403

11 2" 10 Sp @ 9" = 7'-6" | 6 Sp @ 12" = 6'-0" | 19 Sp @ 18" = 28'-6" | 5 Sp @ 12" = 5'-0" | 11 Sp @ 9" = 8'-3" | 5 Sp @ 8" = 3'-4" | 29 Sp @ 6" = 14'-6" | 2'-8" | 2-7 1/2" 28 Sp @ 6" = 6'-14-0" | 6 Sp @ 8" = 4'-0" | 11 Sp @ 9" = 8'-3" | 5 Sp @ 6" = 2'-6" | 20 Sp @ 12" = 20'-0" | 7 Sp @ 12" = 7'-0" | 10 Sp @ 9" = 7'-6" | 5 Sp @ 8" = 3'-4" | 21 Sp @ 6" = 10'-6" | 2'-8" | 2-7 1/2" 18 Sp @ 8" = 8'-0" | 8 Sp @ 9" = 6'-0" | 7 Sp @ 6" = 3'-6" | 18 9 Sp @ 18" = 27'-0" | 6 Sp @ 12" = 6'-0" | 11 Sp @ 9" = 8'-3" | 2'-8" | 10 Sp @ 9" = 7'-6" | 7 Sp @ 12" = 7'-0" | 17 Sp @ 18" = 25'-6" | 7 Sp @ 12" = 7'-0" | 9 Sp @ 12" = 9'-0" | 10 Sp @ 9" = 7'-6" | 2'-8"

GIRDER A

Along ℄ Girder B — 76'-5 1/4" — 94'-6 5/8" — 67'-4 3/4" — 66'-2 1/8"

Longitudinal reinforcing — 2-G801 — 2-G801 — 2-G801 — 2-G802 — 2-G802 — 2-G802 — 2-G803 — 2-G803

Stirrup spacing — 4-G401 — 4-G402 — 4-G403

12" 10 Sp @ 9" = 7'-6" | 7 Sp @ 12" = 7'-0" | 16 Sp @ 18" = 24'-0" | 1'-8 1/2" | 1 Sp @ 18" = 1'-6" | 5 Sp @ 12" = 5'-0" | 11 Sp @ 9" = 8'-3" | 5 Sp @ 8" = 3'-4" | 29 Sp @ 6" = 14'-6" | 2'-8" | 2-8 1/4" 28 Sp @ 6" = 14'-0" | 7 Sp @ 8" = 4'-8" | 10 Sp @ 9" = 7'-6" | 5 Sp @ 12" = 5'-0" | 7 Sp @ 18" = 10'-6" | 1'-8 3/8" | 11 Sp @ 18" = 16'-6" | 8 Sp @ 12" = 8'-0" | 10 Sp @ 9" = 7'-6" | 5 Sp @ 8" = 3'-4" | 21 Sp @ 6" = 10'-6" | 2'-8" | 2'-9" 9 Sp @ 8" = 6'-0" | 10 Sp @ 9" = 7'-6" | 3 Sp @ 8" = 2'-0" | 18" = 1'-6" | 7 Sp @ 12" = 7'-0" | 10 Sp @ 9" = 7'-6" | 9 Sp @ 18" = 13'-6" | 1'-8 3/8" | 7 Sp @ 18" = 10'-6" | 7 Sp @ 12" = 7'-0" | 10 Sp @ 9" = 7'-6" | 9 Sp @ 8" = 6'-0" | 2'-9"

GIRDER B

Along ℄ Girder C — 76'-1 3/8" — 9'-2 1/4" — 67'-1 5/8" — 68'-9"

Longitudinal reinforcing — 2-G801 — 2-G801 — 2-G801 — 2-G802 — 2-G802 — 2-G802 — 2-G803 — 2-G803

Stirrup spacing — 4-G401 — 4-G402 — 4-G403

12" 10 Sp @ 9" = 7'-6" | 7 Sp @ 12" = 7'-0" | 13 Sp @ 18" = 19'-6" | 1'-10 3/4" = 6'-0" | 4 Sp @ 18" = 5'-0" | 5 Sp @ 12" = 9'-7 1/2" | 10 Sp @ = 4'-0" | 6 Sp @ 8" = 4'-0" | 28 Sp @ = 14'-0" | 2'-9" | 2'-9" 9 Sp @ 8" = 6'-14" | 5 Sp @ 12" = 3'-4" | 11 Sp @ 9" = 8'-3" | 6 Sp @ 12" = 6'-0" | 9 Sp @ 18" = 13'-6" | 1'-8 3/8" | 8 Sp @ 16" = 12'-0" | 8 Sp @ 12" = 8'-0" | 11 Sp @ 9" = 9'-7 1/2" | 6 Sp @ 8" = 4'-0" | 20 Sp @ 6" = 10'-0" | 2'-8" | 2'-9" 9 Sp @ 8" = 6'-0" | 10 Sp @ 9" = 7'-6" | 3 Sp @ 8" = 2'-0" | 8 Sp @ 12" = 8'-0" | 11 Sp @ 9" = 8'-3" | 6 Sp @ 12" = 5'-0" | 11 Sp @ 9" = 8'-3" | 2'-9" | 2'-9" 10 Sp @ 9" = 7'-6" | 8 Sp @ 12" = 8'-0" | 11 Sp @ 18" = 16'-6" | 1'-9" | 4 Sp @ 8" = 2'-8" | 8 Sp @ 12" = 8'-0" | 10 Sp @ 9" = 7'-6" | 9 Sp @ 8" = 6'-0" | 2'-9"

GIRDER C

Along ℄ Girder D — 75'-10 5/8" — 93'-9 3/8" — 66'-10 3/8" — 67'-3"

Longitudinal reinforcing — 2-G804 — 2-G804 — 2-G804 — 2-G805 — 2-G805 — 2-G805 — 2-G806 — 2-G806

Stirrup spacing — 4-G404 — 4-G402 — 4-G405

11" 11 Sp @ 9" = 8'-3" | 6 Sp @ 12" = 6'-0" | 16 Sp @ 18" = 24'-0" | 1'-8 1/2" | 1 Sp @ 18" = 1'-6" | 5 Sp @ 12" = 5'-0" | 10 Sp @ 9" = 7'-6" | 5 Sp @ 8" = 3'-4" | 30 Sp @ 6" = 15'-0" | 2'-8" | 2'-8" 30 Sp @ 6" = 15'-0" | 5 Sp @ 8" = 3'-4" | 10 Sp @ 9" = 7'-6" | 5 Sp @ 12" = 5'-0" | 7 Sp @ 18" = 10'-6" | 1'-7 1/2" | 11 Sp @ 18" = 16'-6" | 7 Sp @ 12" = 7'-0" | 10 Sp @ 9" = 7'-6" | 6 Sp @ 8" = 4'-0" | 21 Sp @ 6" = 10'-6" | 2'-8" | 2'-8" 11 Sp @ 8" = 7'-4" | 8 Sp @ 9" = 6'-0" | 7 Sp @ 8" = 5'-0" | 11 Sp @ 18" = 16'-6" | 8 Sp @ 12" = 8'-0" | 10 Sp @ 9" = 7'-6" | 2'-8" | 2'-9" 11 Sp @ 9" = 8'-3" | 6 Sp @ 12" = 6'-0" | 3 Sp @ 18" = 13'-6" | 1'-9" | 8 Sp @ 18" = 12'-0" | 7 Sp @ 12" = 7'-0" | 8 Sp @ 9" = 6'-0" | 11 Sp @ 8" = 7'-4"

GIRDER D

Along ℄ Girder E — 75'-6 5/8" — 93'-5 3/8" — 66'-7 1/4" — 67'-9 5/8"

Longitudinal reinforcing — 2-G804 — 2-G804 — 2-G804 — 2-G805 — 2-G805 — 2-G806 — 2-G906

Stirrup spacing — 4-G404 — 4-G402 — 4-G405

11" 11 Sp @ 9" = 8'-3" | 6 Sp @ 12" = 6'-0" | 13 Sp @ 18" = 19'-6" | 1'-8 3/8" | 4 Sp @ 18" = 6'-0" | 5 Sp @ 12" = 5'-0" | 10 Sp @ 9" = 7'-6" | 5 Sp @ 8" = 3'-4" | 29 Sp @ 6" = 14'-6" | 2'-8" | 2'-8" 29 Sp @ 6" = 14'-6" | 5 Sp @ 8" = 3'-4" | 10 Sp @ 9" = 7'-6" | 5 Sp @ 12" = 5'-0" | 10 Sp @ 18" = 15'-0" | 1'-9 3/8" | 8 Sp @ 18" = 12'-0" | 7 Sp @ 12" = 7'-0" | 10 Sp @ 9" = 7'-6" | 6 Sp @ 8" = 4'-0" | 21 Sp @ 6" = 10'-6" | 2'-8" | 2'-8" 11 Sp @ 8" = 7'-4" | 8 Sp @ 9" = 6'-0" | 8 Sp @ 8" = 5'-0" | 11 Sp @ 18" = 16'-6" | 8 Sp @ 12" = 8'-0" | 10 Sp @ 9" = 7'-6" | 2'-9" | 2'-9" 11 Sp @ 9" = 8'-3" | 6 Sp @ 12" = 6'-0" | 3 Sp @ 18" = 13'-6" | 1'-9" | 8 Sp @ 18" = 12'-0" | 7 Sp @ 12" = 7'-0" | 8 Sp @ 9" = 6'-0" | 11 Sp @ 8" = 7'-4"

GIRDER E

Along ℄ Girder F — 75'-3 3/8" — 93'-1 5/8" — 66'-4 1/2" — 68'-3"

Longitudinal reinforcing — 2-G804 — 2-G804 — 2-G804 — 2-G805 — 2-G805 — 2-G806 — 2-G806

Stirrup spacing — 4-G404 — 4-G402 — 4-G405

10 2" 11 Sp @ 9" = 9'-8 3/4" | 6 Sp @ 12" = 6'-0" | 18 Sp @ 18" = 27'-0" | 5 Sp @ 12" = 5'-0" | 10 Sp @ 9" = 7'-6" | 5 Sp @ 8" = 3'-4" | 29 Sp @ 6" = 14'-6" | 2'-8" | 2'-8 1/2" 30 Sp @ 6" = 15'-0" | 5 Sp @ 8" = 3'-4" | 10 Sp @ 9" = 7'-6" | 5 Sp @ 12" = 5'-0" | 19 Sp @ 18" = 28'-6" | 7 Sp @ 12" = 7'-0" | 10 Sp @ 9" = 7'-6" | 5 Sp @ 8" = 3'-4" | 21 Sp @ 6" = 10'-6" | 2'-8" | 2'-8" 18 Sp @ 8" = 8'-0" | 8 Sp @ 9" = 6'-0" | 7 Sp @ 12" = 7'-0" | 17 Sp @ 18" = 25'-6" | 6 Sp @ 12" = 6'-0" | 11 Sp @ 9" = 8'-3" | 2'-9" | 2'-9" 11 Sp @ 9" = 8'-3" | 7 Sp @ 12" = 7'-0" | 18 Sp @ 18" = 27'-0" | 7 Sp @ 12" = 7'-0" | 10 Sp @ 9" = 7'-6" | 9 Sp @ 8" = 6'-0" | 2'-8"

GIRDER F

℄ Bent 5℄ Match Line — Access hole girders C℄E — Access hole girders B℄D — ℄ Bent 6 — Access hole girders B℄D — Access hole girders C℄E — ℄ Bearing End Bent 7

Const. Joint — Const. Joint

96-6 1/2" — 76'-5 7/8"

2-G810 — 2-G810 — 2-G809 — 2-G809

4-G405 — 4-G406

2'-6 1/2" 21 Sp @ 6" = 10'-6" | 5 Sp @ 8" = 3'-4" | 10 Sp @ 9" = 7'-6" | 7 Sp @ 12" = 7'-0" | 21 Sp @ 18" = 31'-6" | 6 Sp @ 12" = 6'-0" | 10 Sp @ 9" = 7'-6" | 5 Sp @ 8" = 3'-4" | 29 Sp @ 6" = 14'-6" | 2'-8" | 2'-9" 28 Sp @ 6" = 14'-0" | 4 Sp @ 8" = 2'-8" | 7 Sp @ 9" = 5'-3" | 5 Sp @ 12" = 5'-0" | 19 Sp @ 18" = 28'-6" | 7 Sp @ 12" = 7'-0" | 9 Sp @ 12" = 8'-6" | 11 8" = 1'-0" | 524-G501 / 524-G502

GIRDER A

95'-6 1/4" — 76'-3 5/8"

2-G810 — 2-G810 — 2-G809 — 2-G809

4-G405 — 4-G406

2'-8" 22 Sp @ 6" = 11'-0" | 5 Sp @ 8" = 3'-4" | 10 Sp @ 9" = 7'-6" | 7 Sp @ 12" = 7'-0" | 12 Sp @ 18" = 18'-0" | 1'-9 1/4" | 7 Sp @ 18" = 10'-6" | 5 Sp @ 12" = 5'-0" | 11 Sp @ 9" = 8'-3" | 5 Sp @ 8" = 3'-4" | 29 Sp @ 6" = 14'-6" | 2'-8" | 2'-8" 29 Sp @ 6" = 14'-6" | 5 Sp @ 8" = 3'-4" | 11 Sp @ 9" = 8'-3" | 5 Sp @ 12" = 5'-0" | 15 Sp @ 18" = 24'-0" | 1'-9 5/8" | 16 Sp @ 18" = 24'-0" | 6 Sp @ 12" = 6'-0" | 11 Sp @ 9" = 8'-3" | 524-G502 / 524-G503

GIRDER B

94'-6"

2-G807 — 2-G807 — 2-G809 — 2-G809

4-G405 — 4-G406

2'-8" 21 Sp @ 6" = 10'-6" | 5 Sp @ 8" = 3'-4" | 10 Sp @ 9" = 7'-6" | 7 Sp @ 12" = 7'-0" | 9 Sp @ 18" = 13'-6" | 1'-9 1/2" | 10 Sp @ 18" = 15'-0" | 5 Sp @ 12" = 5'-0" | 10 Sp @ 9" = 7'-6" | 6 Sp @ 8" = 4'-0" | 28 Sp @ 6" = 14'-0" | 2'-8" | 2'-8 1/4" 28 Sp @ 6" = 14'-0" | 4 Sp @ 8" = 2'-8" | 7 Sp @ 9" = 5'-3" | 5 Sp @ 12" = 5'-0" | 4 Sp @ 18" = 6'-0" | 1'-10 3/4" = 6'-0" | 13 Sp @ 18" = 19'-6" | 7 Sp @ 12" = 7'-0" | 10 Sp @ 9" = 7'-6" | 12" = 1'-0" | 521-G502 / 521-G503

GIRDER C

92'-5 3/4" — 75'-10 3/4"

2-G807 — 2-G807 — 2-G809 — 2-G809

4-G403 — 4-G406

2'-8" 20 Sp @ 6" = 10'-0" | 6 Sp @ 8" = 4'-0" | 10 Sp @ 9" = 7'-6" | 7 Sp @ 12" = 7'-0" | 11 Sp @ 18" = 16'-6" | 1'-9" | 7 Sp @ 18" = 10'-6" | 5 Sp @ 12" = 5'-0" | 10 Sp @ 9" = 7'-6" | 5 Sp @ 8" = 3'-4" | 30 Sp @ 6" = 15'-0" | 2'-8" | 2'-8" 30 Sp @ 6" = 15'-0" | 5 Sp @ 8" = 3'-4" | 10 Sp @ 9" = 7'-6" | 5 Sp @ 12" = 5'-0" | 15 Sp @ 18" = 24'-0" | 1'-7 1/8" | 16 Sp @ 18" = 24'-0" | 6 Sp @ 12" = 6'-0" | 11 Sp @ 9" = 8'-3" | 523-G502 / 523-G503

GIRDER D

91'-5 1/4" — 75'-8 5/8"

2-G808 — 2-G808 — 2-G809 — 2-G809

4-G403 — 4-G406

2'-8" 20 Sp @ 6" = 10'-0" | 6 Sp @ 8" = 4'-0" | 10 Sp @ 9" = 7'-6" | 7 Sp @ 12" = 7'-0" | 8 Sp @ 18" = 12'-0" | 1'-9 3/4" | 10 Sp @ 18" = 15'-0" | 5 Sp @ 12" = 5'-0" | 10 Sp @ 9" = 7'-6" | 5 Sp @ 8" = 3'-4" | 29 Sp @ 6" = 14'-6" | 2'-8" | 2'-9" 29 Sp @ 6" = 14'-6" | 5 Sp @ 8" = 3'-4" | 10 Sp @ 9" = 7'-6" | 5 Sp @ 12" = 5'-0" | 4 Sp @ 18" = 6'-0" | 1'-8 3/4" | 13 Sp @ 18" = 19'-6" | 7 Sp @ 12" = 7'-0" | 10 Sp @ 9" = 7'-6" | 11" | 520-G502 / 520-G503

GIRDER E

91'-5 1/4" — 75'-6 1/4"

2-G808 — 2-G808 — 2-G809 — 2-G809

4-G403 — 4-G406

2'-7 3/4" 22 Sp @ 6" = 11'-0" | 5 Sp @ 8" = 3'-4" | 10 Sp @ 9" = 7'-6" | 7 Sp @ 12" = 7'-0" | 18 Sp @ 18" = 27'-0" | 5 Sp @ 12" = 5'-0" | 10 Sp @ 9" = 7'-6" | 5 Sp @ 8" = 3'-4" | 29 Sp @ 6" = 14'-6" | 2'-8" | 2'-8 1/4" 29 Sp @ 6" = 14'-6" | 5 Sp @ 8" = 3'-4" | 10 Sp @ 9" = 7'-6" | 6 Sp @ 12" = 6'-0" | 18 Sp @ 18" = 27'-0" | 6 Sp @ 12" = 6'-0" | 10 Sp @ 9" = 7'-6" | 12" | 520-G50-1 / 520-G503

GIRDER F

GIRDER WEB REINFORCEMENT

Note:
Extend No 8 bars 3'-0" past const. joint.
Extend No 4 bars 2'-0" past const. joint
Lap No 8 bars 2'-8" min. and No. 4 bars 1'-4" min.
Cut or bend longitudinal reinforcing bars in the field to miss access holes.
All dimensions are horizontal.

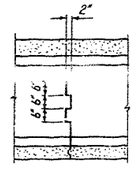


GIRDER WEB CONSTRUCTION JOINT

HOWARD, NEEDLES, TAMMEN & BERGENDOFF
CONSULTING ENGINEERS
KANSAS CITY — NEW YORK

| | | | |
|---|---|---|---|
| MADE L.J.R | DATE 2-22-62 | TRACED | DATE |
| CHECKED C.G.P | DATE 3-8-62 | SCALE | |

NOTE: This drawing is not to scale. Follow dimensions.

## BRIDGE: LT. LANE RTE. I-435 OVER RAMPS "G," "H" & "F" & RTE. I-70

STATE ROAD - ROUTES I-435 & I-70 INTERCHANGE
FROM ROUTE 40 TO LEEDS ROAD
PROJECT NO. I-435-1(24)(RTE. I-435) STA. 380+98.46 (LT. LANE)

## JACKSON COUNTY

SHEET 14 OF 17

A-993

353

AS CONSTRUCTION CHANGES

# MISSOURI STATE HIGHWAY DEPARTMENT

| FED. ROAD DIV. NO. | STATE | FEDERAL PROJECT NO. & SEC. | FISCAL YEAR | SHEET NO. | TOTAL SHEETS |
|---|---|---|---|---|---|
| 5 | MO | | | 15 | |
| DIST. NO. | COUNTY | | ROUTE | SEC. | |
| 4 | JACKSON | | | | |

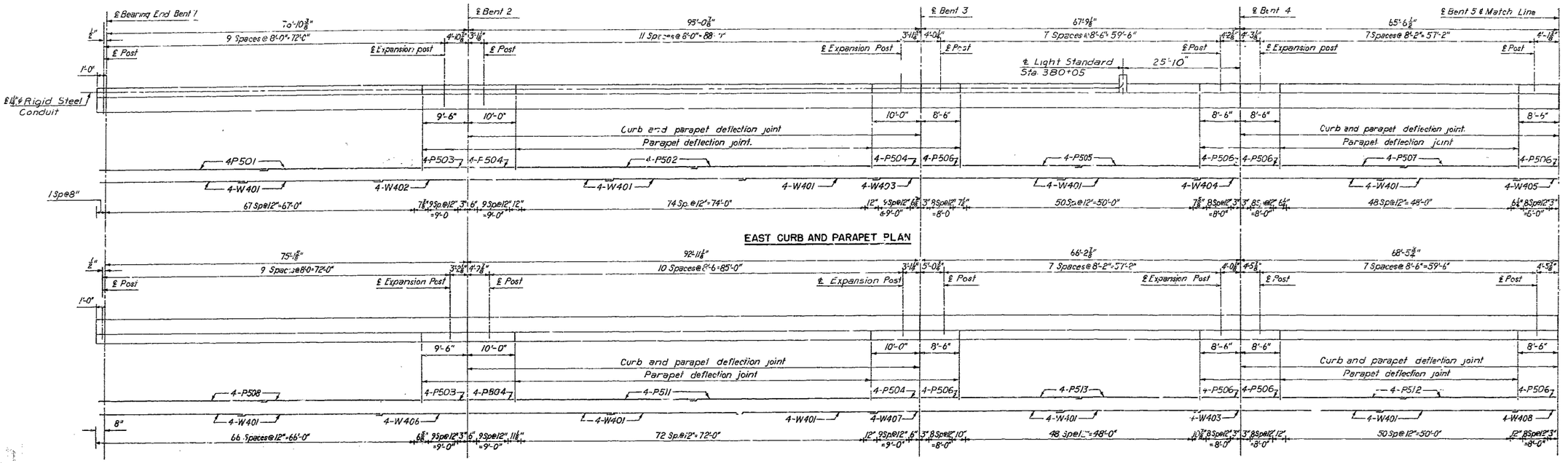


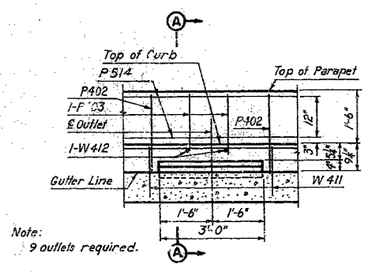


CURB OUTLET ELEVATION

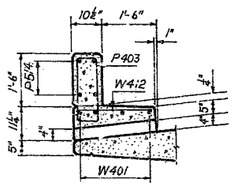


SECTION A-A

CURB OUTLET DETAILS

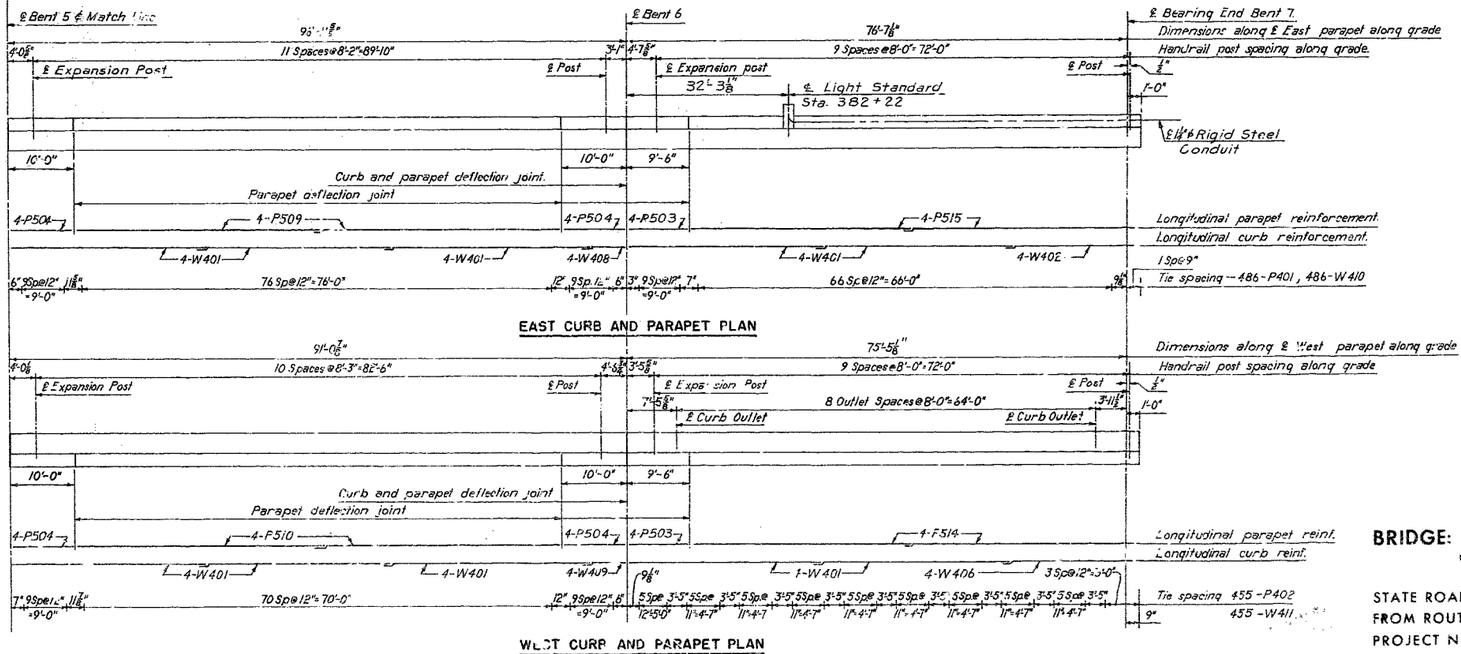


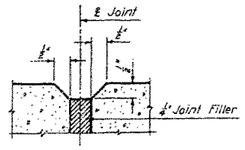


DEFLECTION JOINT DETAILS

HOWARD, NEEDLES, TAMMEN & BERGENDOFF
CONSULTING ENGINEERS
KANSAS CITY NEW YORK

| | | | |
|---|---|---|---|
| MADE E.J.R. | DATE 2-26-62 | TRACED | DATE |
| CHECKED CGP | DATE 3-6-62 | SCALE | |

NOTE: This drawing is not to scale. Follow dimensions.

## BRIDGE: LT. LANE RTE. I-435 OVER RAMPS "G," "H" & "F" & RTE. I-70

STATE ROAD - ROUTES I-435 & I-70 INTERCHANGE
FROM ROUTE 40 TO LEEDS ROAD
PROJECT NO. I-435-1(24)(RTE. I 435) STA. 380+98.46 (LT. LANE)

JACKSON COUNTY

SHEET 15 OF 17

A-993

NO CONSTRUCTION CHANGES

354

# MISSOURI STATE HIGHWAY DEPARTMENT

| FED. ROAD DIV. NO. | STATE | FEDERAL PROJECT NO. & SEC. | FISCAL YEAR | SHEET NO. | TOTAL SHEETS |
|---|---|---|---|---|---|
| 5 | MO | | | 16 | |
| DIST. NO. | COUNTY | | ROUTE | SEC. | |
| 4 | | | | | |

Note

Approved stud welded anchors may be used in lieu of #5 bars shown.

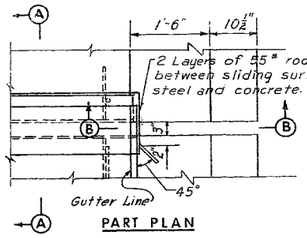


PART PLAN

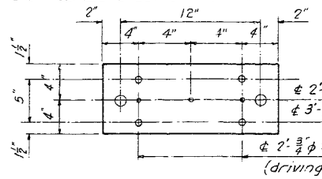


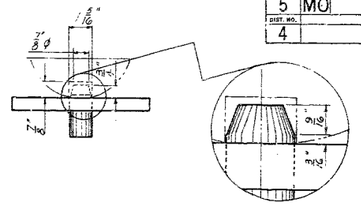


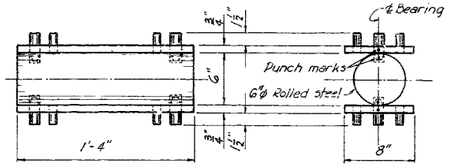


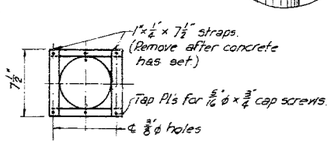


No. of expansion rollers required
End bent #1 = 6
End bent #7 = 6

Note:
Top and bottom plates to be U55 T-1 Alloy or equivalent. Materials for pintles and rollers shall be cold finished carbon steel A151 = C1042 or C1045 (turned and polished).
All bearing plates shall be straightened to plane surfaces.
E 6015 or E 6016 welding electrodes shall be used.
Paint: Shop: One coat red lead except top surface of top plate and bottom surface of bottom plate.
Field: All exposed surfaces first coat brown, second coat aluminum.

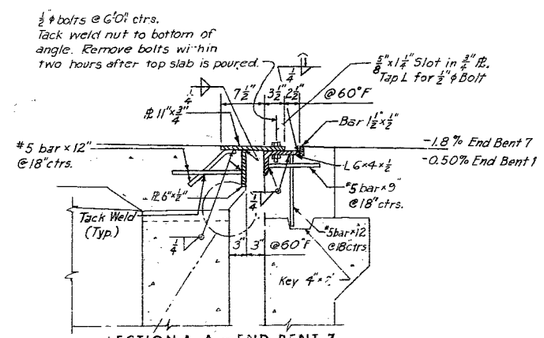


SECTION A-A — END BENT 7
(End Bent 1 Similar)

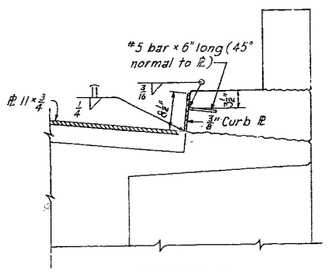


SECTION B-B

Note: #5 bars used as Expansion joint anchors to be structural grade steel.

Note: Backwall to be poured and forms to be removed prior to pouring of top slab of box girder.

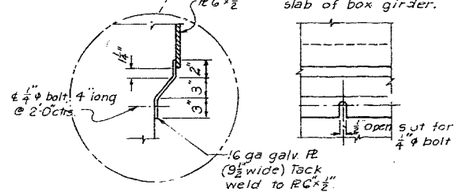


EXPANSION JOINT DETAIL

## EXPANSION ROLLER

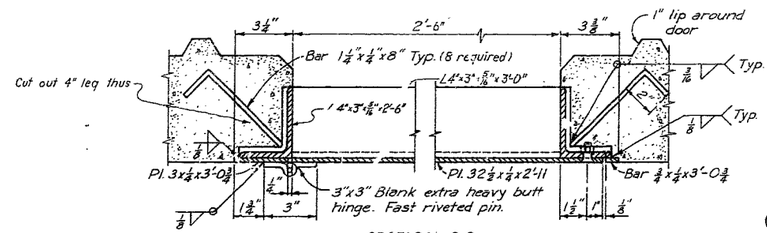


SECTION C-C

Note:
Access Doors to be assembled and in place while slab is being poured.
Bottom surface of door to be flush with bottom of slab.

Payment for furnishing and placing access doors and frames shall be made and considered fully covered under price bid for Fabricated Structural Carbon Steel.

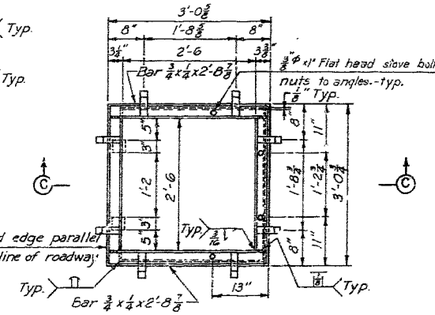


PLAN

## BOTTOM SLAB ACCESS DOOR DETAILS

No. of doors required - 6
Note: Weight of one door and frame is approximately 181 lbs.

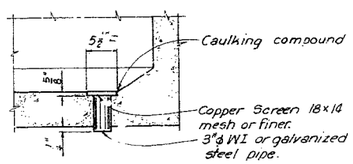


Note:
If galvanized steel pipe is used, the screen shall be aluminum.
Cost of furnishing and placing pipe, screen, and caulking compound shall be included in price bid for other items of work.

BOTTOM SLAB DRAIN

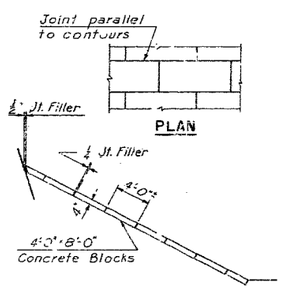


SLOPE PROTECTION

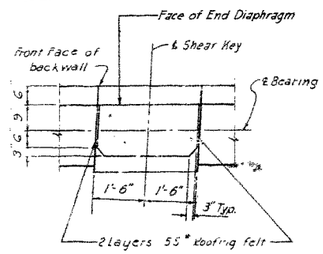


SHEAR KEY DETAIL

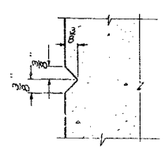

RUSTICATION DETAIL

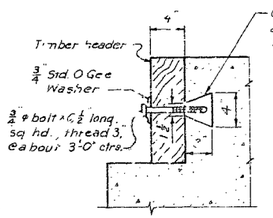


Note: Cost of timber headers, complete in place, to be included in unit price bid for concrete.

TIMBER HEADER DETAIL

NOTE: This drawing is not to scale. Follow dimensions.

HOWARD, NEEDLES, TAMMEN & BERGENDOFF
CONSULTING ENGINEERS
KANSAS CITY NEW YORK

| | | | |
|---|---|---|---|
| MADE JLW | DATE 11-25-61 | TRACED | DATE |
| CHECKED L.J.R. | DATE 3-29-62 | SCALE | |

SHEET 16 OF 17

# BRIDGE: LT. LANE RTE. I-435 OVER RAMPS "G," "H" & "F" & RTE. I-70

STATE ROAD - ROUTES I-435 & I-70 INTERCHANGE
FROM ROUTE 40 TO LEEDS ROAD
PROJECT NO. I-435-1(24)(RTE. I-435) STA. 380+98.46 (LT. LANE)

JACKSON COUNTY

A-993

355

# MISSOURI STATE HIGHWAY DEPARTMENT

| FED. ROAD DIV. NO. | STATE | FEDERAL PROJECT NO. & SEC. | FISCAL YEAR | SHEET NO. | TOTAL SHEETS |
|---|---|---|---|---|---|
| 5 | MO | | | 17 | |
| DIST. NO. | COUNTY | | ROUTE | SEC. | |
| 4 | JACKSON | | | | |

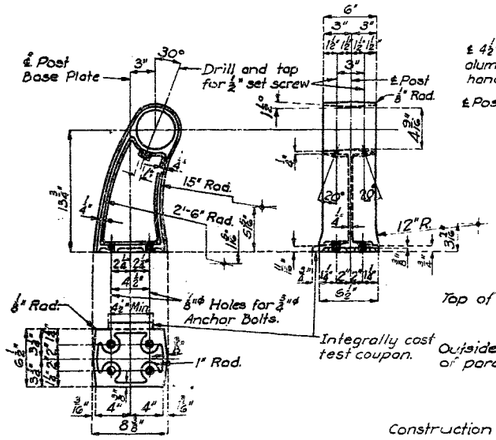


HANDRAIL POST

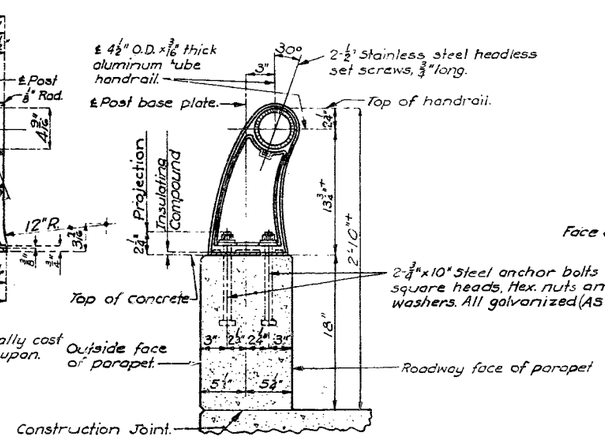


SECTION THRU HANDRAIL

## SINGLE TUBE ALUMINUM RAILING

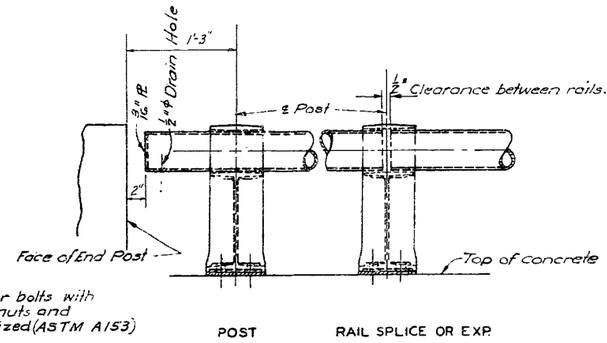


POST RAIL SPLICE OR EXP.

TYPICAL HANDRAIL DETAILS

Note: All handrail posts shall be set normal to grade.

Aluminum tube handrail shall be bent to conform to vertical and horizontal alignment of parapet.

Aluminum washer shims between top of parapet and post base may be used for adjusting handrail alignment. Maximum thickness of shims to be ⅛". Where more fitting of post is required for proper alignment, concrete bearing areas shall be ground down.

All parts of handrail, except anchor bolts, nuts, washers, and set screws are to be of aluminum material.

The contract unit price per linear foot of "Bridge Rail (Single Tube Type)" shall include furnishing and erecting the handrail complete with anchor bolts, shims and Insulating Compound.

All fillets ¼" except as noted.

All draft 3° except as noted.

Pipe rail to be fabricated in two or three panel lengths unless otherwise approved.

Omit set screw on side near filled joint in parapet at all expansion posts.

Top of curbs and parapets to be built parallel to grade. Vertical faces of end posts to be vertical.

All exposed edges of end posts and parapets to be beveled ½".

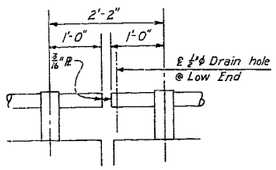


AT EXPANSION JOINT

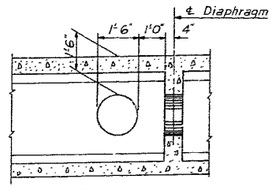


GIRDER WEB ACCESS HOLE

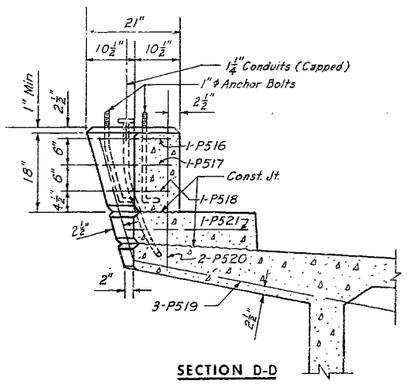


SECTION D-D

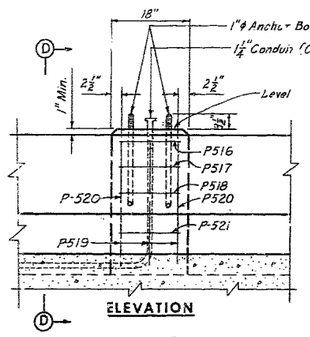


ELEVATION

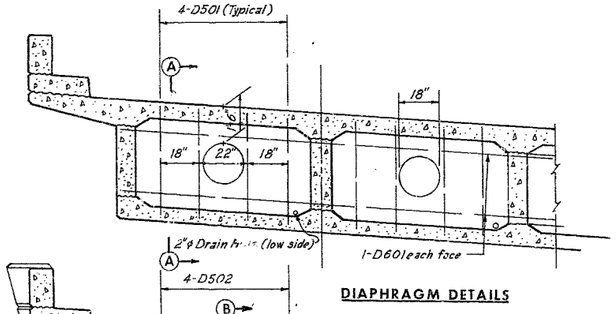


DIAPHRAGM DETAILS

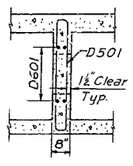


SECTION A-A

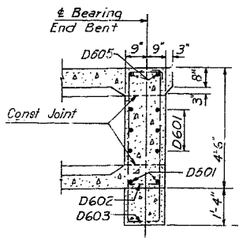


SECTION C-C

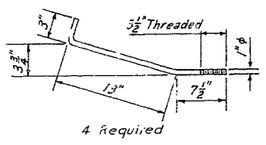


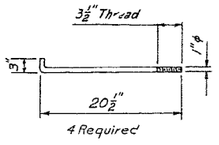


ANCHOR BOLTS

Note:
Bolts shall be furnished complete with 2 Standard Hex. Nuts and Washers, all galvanized. Payment for furnishing and installing bolt shall be included in price bid for other items.

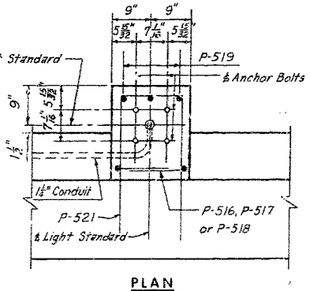


PLAN

DETAILS OF LIGHT STANDARD SUPPORT

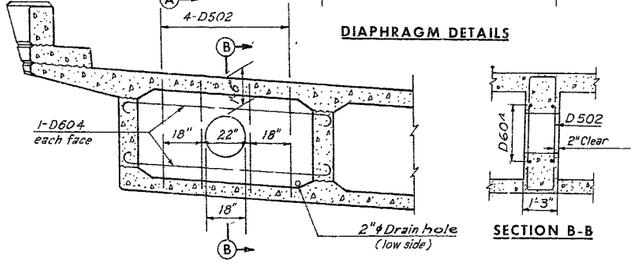


SPECIAL DIAPHRAGM




SECTION B-B

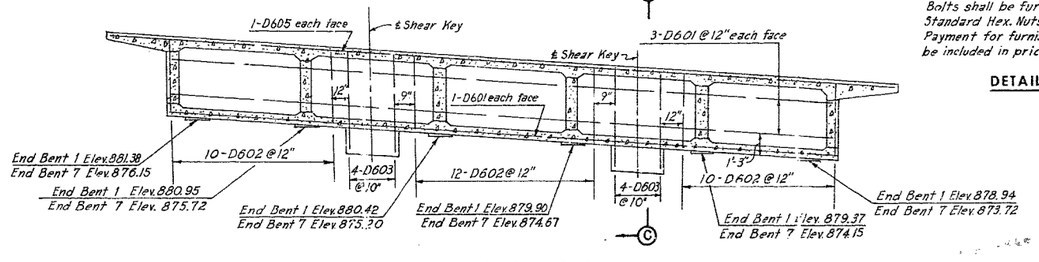


END DIAPHRAGMS

**BRIDGE: LT. LANE RTE. I-435 OVER RAMPS "G," "H" & "F" & RTE. I-70**

STATE ROAD - ROUTES I-435 & I-70 INTERCHANGE FROM ROUTE 40 TO LEEDS ROAD

PROJECT NO. I-435-1(24)(RTE. I-435) STA. 380+98.46 (LT. LANE)

**JACKSON COUNTY**

HOWARD, NEEDLES, TAMMEN & BERGENDOFF
CONSULTING ENGINEERS
KANSAS CITY NEW YORK

| | | | | | |
|---|---|---|---|---|---|
| MADE | J.L.W. | DATE | 3-1-62 | TRACED | DATE |
| CHECKED | L.J.R. | DATE | 3-8-62 | SCALE | |

SHEET 17 OF 17

A-993

356

NO CONSTRUCTION CHANGES

# MISSOURI STATE HIGHWAY DEPARTMENT

| FED. ROAD DIST. NO. | STATE | FEDERAL PROJECT NO. & SEC. | FISCAL YEAR | SHEET NO. | TOTAL SHEETS |
|---|---|---|---|---|---|
| 5 | MO | I-435-1(24)18 | | 71 | |
| DIST. NO. | | COUNTY | ROUTE | SEC. | |
| 4 | | JACKSON | I-435 | | |

FINAL PLANS

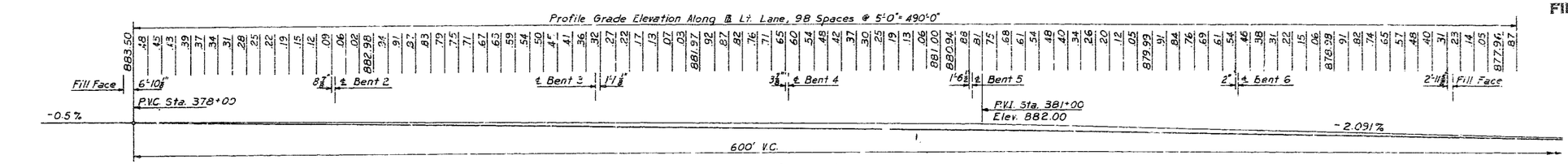


**PROFILE GRADE**

76', 94', 67', 67', 94', 76' CONTINUOUS CONCRETE BOX GIRDER SPANS

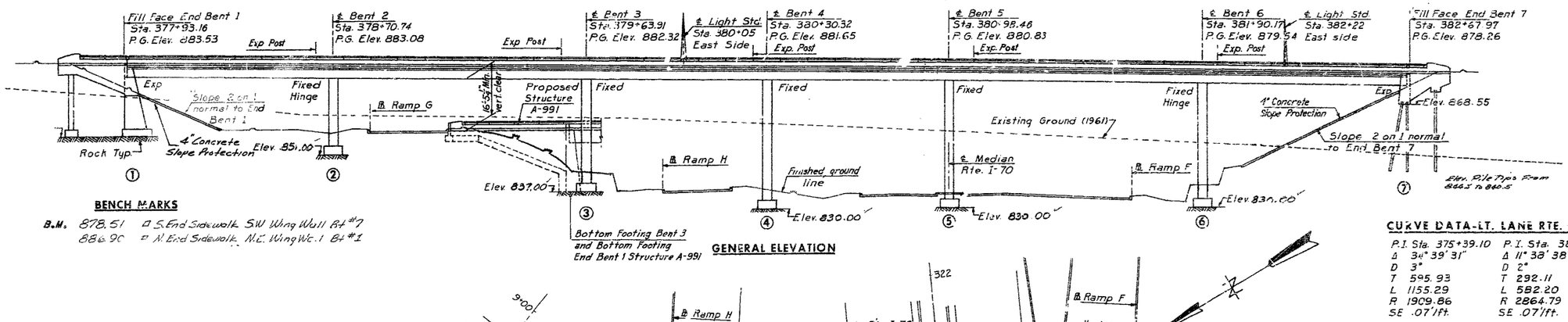


**BENCH MARKS**

B.M. 878.51 ▫ S. End Sidewalk SW Wing Wall Bt #7
886.90 ▫ N. End Sidewalk NE Wing Wl. Bt #1

**GENERAL ELEVATION**

**CURVE DATA-LT. LANE RTE. I-435**

| | |
|---|---|
| P.I. Sta. 375+39.10 | P.I. Sta. 383+90.57 |
| Δ 34° 39' 31" | Δ 11° 38' 38" |
| D 3° | D 2° |
| T 595.93 | T 292.11 |
| L 1155.29 | L 582.20 |
| R 1909.86 | R 2864.79 |
| SE .07'/ft. | SE .07'/ft. |

Note: Roadway excavation was completed adjacent to this site before substructure was started. See Special Provisions.

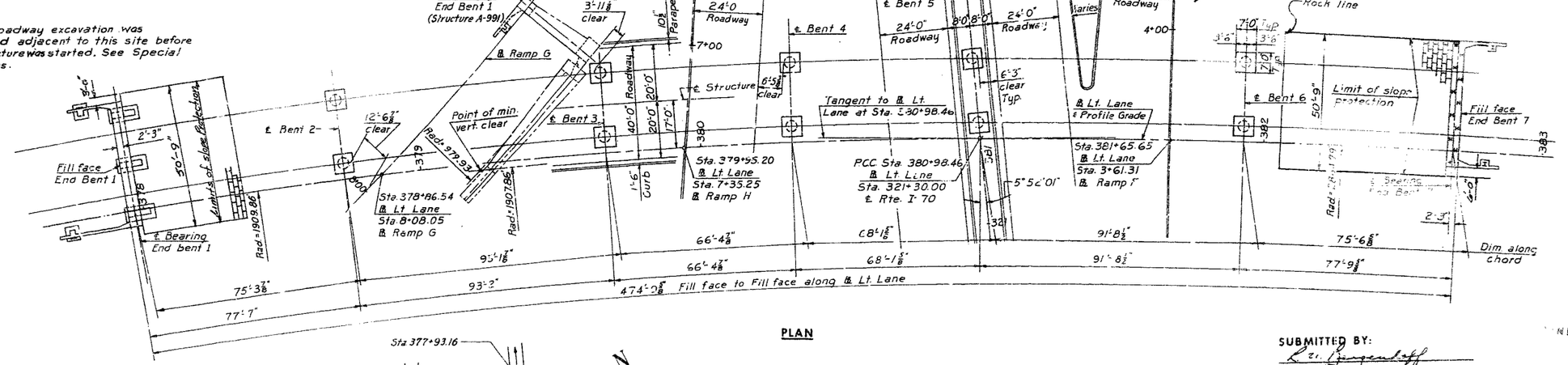


**PLAN**

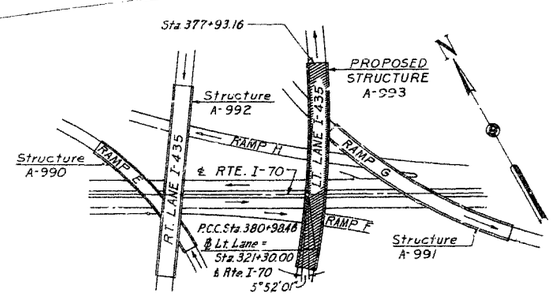


**LOCATION SKETCH**

Notes
Concrete slope protection on front slopes at End Bent 7 is included under road contract. Provide ½" filler between slope protection pavement and End Bent 7.
Concrete slope protection extended a minimum of 6" into rock or shale.
Joints consist of material conforming to Section 157.1.7 of the Standard Specifications.
Compacted roadway fill (full roadway width) was placed up to elevation of bottom of concrete beam in front of and not less than 25'-0" in back of End Bent 7 before steel piles were driven.
Bents were not located from the reference point on the tangent by conventional survey methods based on 100' chords.
All dimensions shown are horizontal.
For location of piles in End Bent 7 see sheet 9.

FINISHED

SUBMITTED BY:
Karl Jungendorff
REGISTERED PROFESSIONAL ENGINEER
MISSOURI NO. E-253

**BRIDGE: LT. LANE RTE. I-435 OVER RAMPS "G" "H" & "F" & RTE. I-70**

STATE ROAD - ROUTES I-435 & I-70 INTERCHANGE
FROM ROUTE 40 TO LEEDS ROAD
PROJECT NO. I-435-1(24)(RTE. I-435) STA. 380+98.46(LT. LANE)

**JACKSON COUNTY**

FINISHED

SUBMITTED BY [illegible] DATE 12/5/62
BRIDGE ENGINEER
[illegible] DATE 12-5-62
CHIEF ENGINEER

HOWARD, NEEDLES, TAMMEN & BERGENDOFF
CONSULTING ENGINEERS
KANSAS CITY NEW YORK

| | | | |
|---|---|---|---|
| MADE L.W.L. | DATE 2-14-62 | TRACED | DATE |
| CHECKED J.L.W. | DATE 3-28-62 | SCALE | |

NOTE: This drawing is not to scale. Follow dimensions.

SHEET 1 OF 14 SHEETS

STD. 54.00
A-993

357

FINAL PLANS

# MISSOURI STATE HIGHWAY DEPARTMENT

| FED. ROAD DIV. NO. | STATE | FEDERAL PROJECT NO. & SEC. | FISCAL YEAR | SHEET NO. | TOTAL SHEETS |
|---|---|---|---|---|---|
| 5 | MO | I-435-1(24)18 | ... | 72 | |
| DIST. NO. | COUNTY | | ROUTE | | ETC. |
| 4 | JACKSON | | I-435 | | |

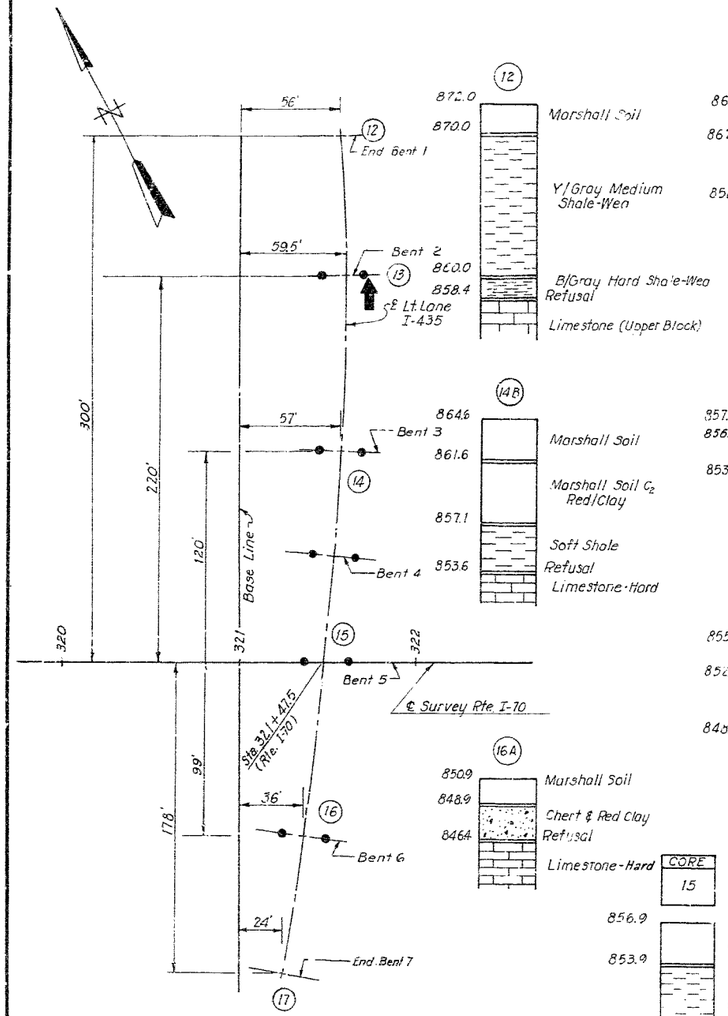





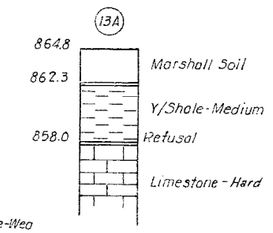


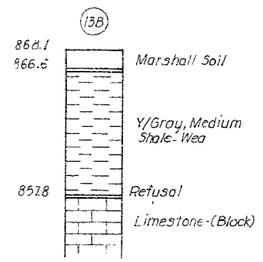


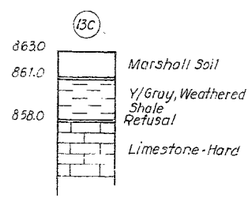


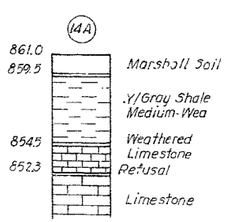





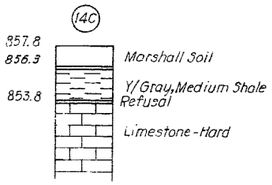


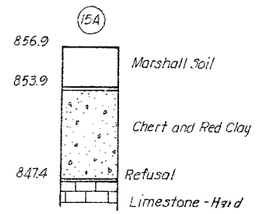


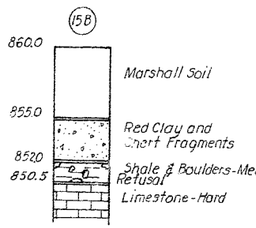


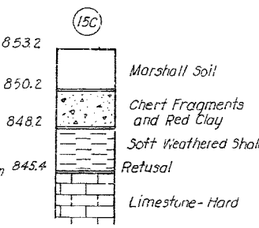


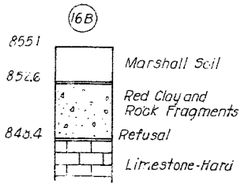


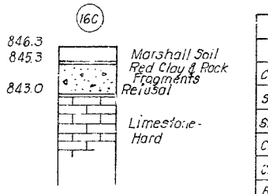








Note:
Soundings with Subscript "A" are on ℄ of Roadway.
Soundings with Subscript "B" are 35' Rt of ℄.
Soundings with Subscript "C" are 35' Lt. of ℄.

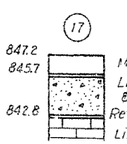


## LOG OF SOUNDINGS

Note:
All soundings are made with power auger except as noted for number 15.

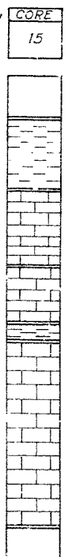


## QUANTITIES

| ITEM | UNIT | SUBSTR. | SUPERSTR. | TOTAL |
|---|---|---|---|---|
| Class 1 Excavation for Structures | Cu. Yd. | 412.5 | | 412.5 |
| Steel Piles in Place (10BP42) | Lin. Ft. | 396 | | 396 |
| Steel Pile Cut-Offs (10BP42) | Lin. Ft. | 57 | | 57 |
| Class B Concrete | Cu. Yd | 204.1 | | 204.1 |
| Class B1 Concrete | Cu Yd. | | 1481.1 | 1481.1 |
| Reinforcing Steel | Lbs. | 24,500 | 572,590 | 597,090 |
| Fabricated Structural Carbon Steel | Lbs. | | 8280 | 8280 |
| Bridge Rail (Single Tube Type) | Lin. ft. | | 993 | 993 |
| Conduit System (on Structure) | L.S. | | 1 | 1 |
| Quantity Notes: Test holes | Lin. Ft. | 64 | | 64 |

CONTINGENT

Class 1 Excavation for Structures was measured from the existing ground line or from the lower limits of roadway excavation, whichever is lower, regardless of the sequence of operations or method of removal.
All excavation for bridge was paid for as Class 1 Excavation for Structures. No payment for excavation was allowed at end Bent No. 7.
All concrete and reinforcement at intermediate bents above top of footing are inclued in superstructure quantities.
Estimated quantity of Class B concrete substructure includes all concrete in abutments and intermediate bent footings. All other concrete is included in estimated quantity of Class B1 concrete.
Weight of bearings is included in weight of Fabricated Structural Carbon Steel.

Estimated quantities of steel piles in place shown on plans are based on the following lengths: 13 at 33' (End Bent 7).
These indicated lengths are approximate only. Proper lengths to give required bearing and/or penetration were authorized by the Engineer.

GENERAL NOTES (CONT'D)

Painting

Paint: Shop none, except as noted for bearings; field, three coats of red lead for surfaces inaccessible after erection. All other exposed surfaces except as noted for bearings first coat red lead, second coat brown, third coat aluminum except that final coat on access doors and frames was gray. Payment for paint, cleaning and painting such surfaces was included in the unit price bid for Fabricated Structural Carbon Steel.

FINISHED

# FINAL PLANS

## GENERAL NOTES

Design Specifications

A.A.S.H.O. 1961.

Design Loading

H20-S16-44 w. th 15 #/sq.ft. future wearing surface. (Modified 24,000# Tandem Axles)

Concrete

Concrete Stress - Class B1 fc = 1,600 p.s.i.
Class B fc = 1,200 p.s.i.
Concrete for superstructure was - Class B1 air-entrained. Concrete for substructure was Class B air-entrained.

Reinforcing Steel

Allowable stress 20,000 p.s.i. All splices in reinforcing steel were 32 bar diameters.
Bar sizes are designated on the plans by numbers. The first digit after the letter in three digit marks and the first two digits after the letter in four digit marks indicate the size of bar.
Dimensions shown on the plans from the reinforcing steel to outside edge of concrete are all clear dimensions.
All bending dimensions are from "out to out" of bars.

Joint Filler

Where joint filler is specified on the plans it did conform with the requirements for gray sponge rubber compound joints as given in Section 157.2.4 of the Standard Specifications.

Metal Conduits

Expansion fittings were required in steel conduit at all expansion joints. Expansion fittings be O. Z. Electrical Manufacturing Company Type AX-125 with AJ bonding jumper or equal.

Sealing of Decks

Superstructure deck was surface sealed. See Special Provisions.

Welding

Qualification of welding operators was required.

Utilities

All utilities, unless shown otherwise, were removed or relocated by others. The Contractor did notify the owner of the utilities of his work schedule sufficiently in advance to allow time for the disposition of utilities.

Shipping

Permits were obtained for all truck loads over legal length.

Piling

All piles were 10BP42 and did conform with details and notes shown on Sheet No. 9. All piles were driven to or into solid rock, boulders, shale or cemented gravel, or to not less than full length authorized, and to sustain a load of at least 33 tons per pile for 10BP42.
All piles were driven with a power hammer. See Section 52.47 of Standard Specifications, for required painting of steel piles.

Excavation to Rock

All loose, shelly or disintegrated rock was removed and footings placed on hard, solid, undisturbed rock. If soft rock or shale was encountered, the footings were carried at least 18" into and cast against vertical faces of same. In no case were the footings of bents 3 thru 7 placed higher than elevations shown. Bearing of 12 tons per sq.ft was used in design of footings.

FINISHED

HOWARD, NEEDLES, TAMMEN & BERGENDOFF
CONSULTING ENGINEERS
KANSAS CITY NEW YORK

| | | | |
|---|---|---|---|
| MADE MJW | DATE 2-14-62 | TRACED | DATE |
| CHECKED L.A.P. | DATE 2-16-62 | SCALE | |

NOTE: This drawing is not to scale. Follow dimensions.

# BRIDGE: LT. LANE RTE. I-435 OVER RAMPS "G," "H" & "F" & RTE. I-70

STATE ROAD - ROUTES I-435 & I-70 INTERCHANGE
FROM ROUTE 40 TO LEEDS ROAD
PROJECT NO. I-435-1(24)(RTE. I-435) STA. 380+98.46 (LT. LANE)
JACKSON COUNTY

FINISHED

SHEET 44 OF 44

A-993

358

FINAL PLANS

# MISSOURI STATE HIGHWAY DEPARTMENT

| FED. ROAD DIV. NO. | STATE | FEDERAL PROJECT NO. & SEC. | P.O.C. YES/NO | SHEET NO. | TOTAL SHEETS |
|---|---|---|---|---|---|
| 5 | MO | I-435-1(24)18 | | 7 | |
| SHT. NO. | COUNTY | | | | |
| 4 | JACKSON | | | | |

FINAL PLANS

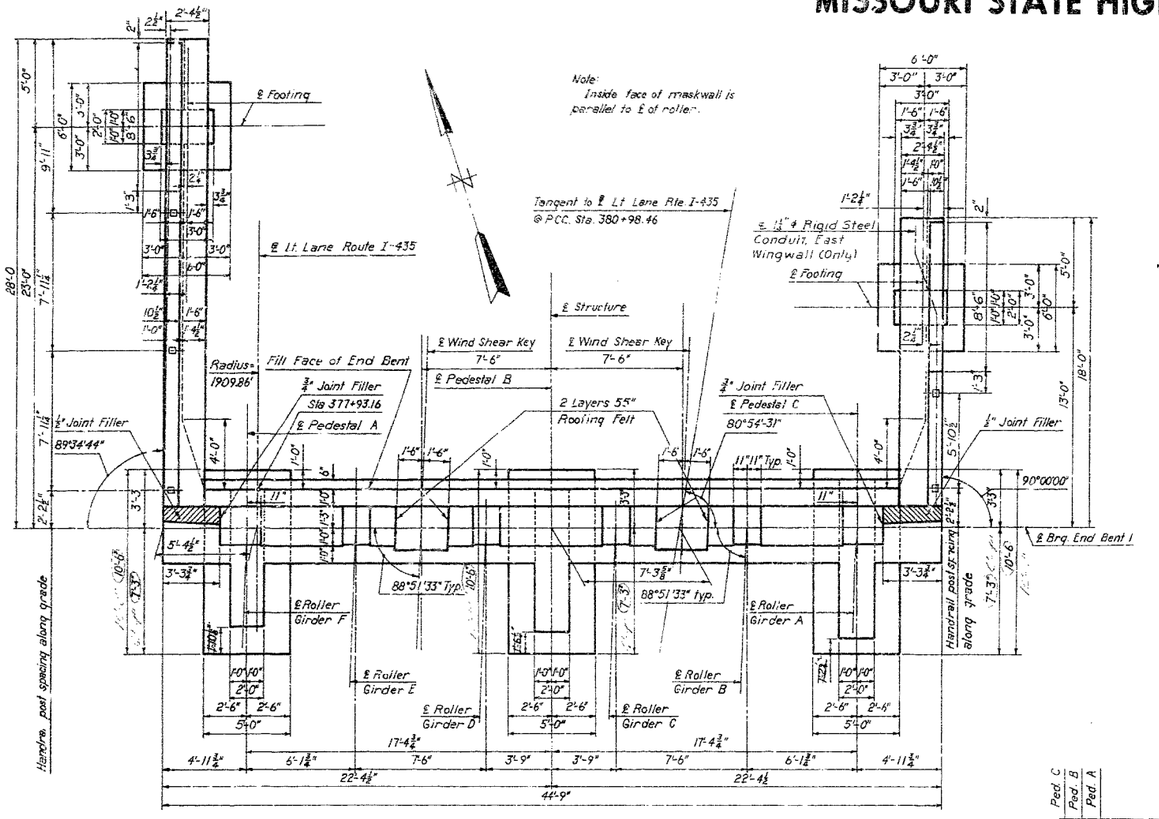


PLAN

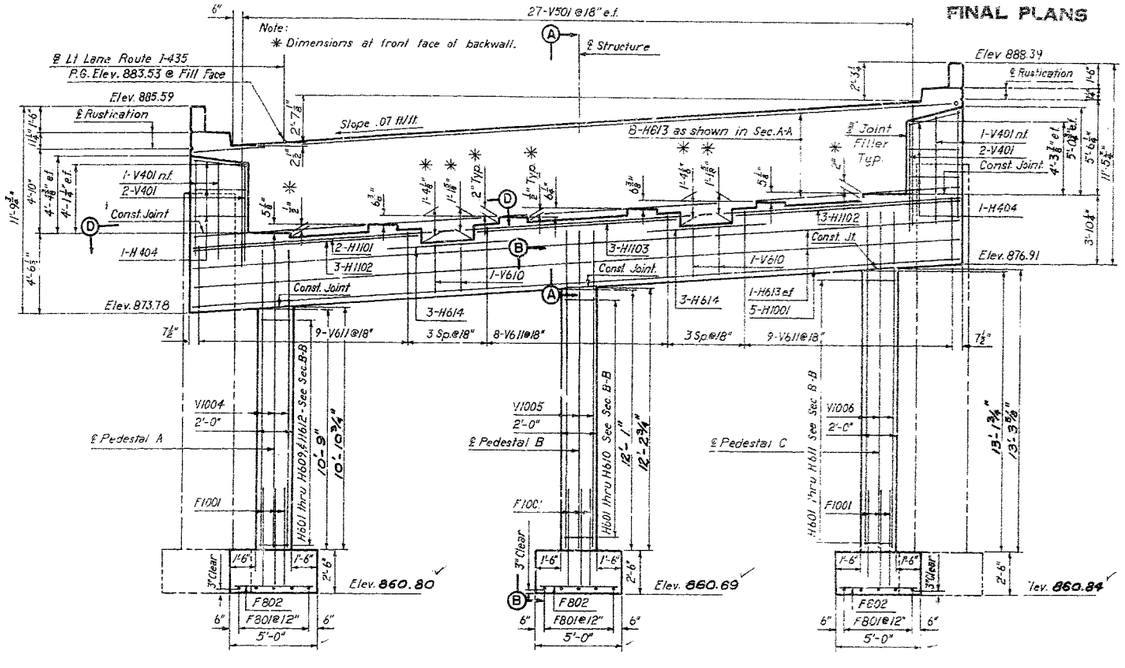


ELEVATION

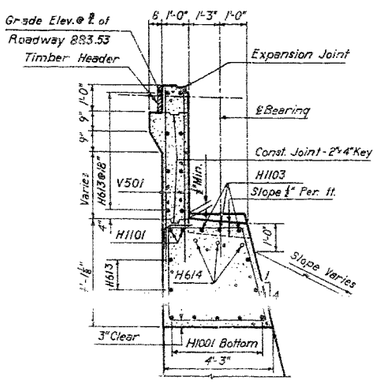


SECTION A-A

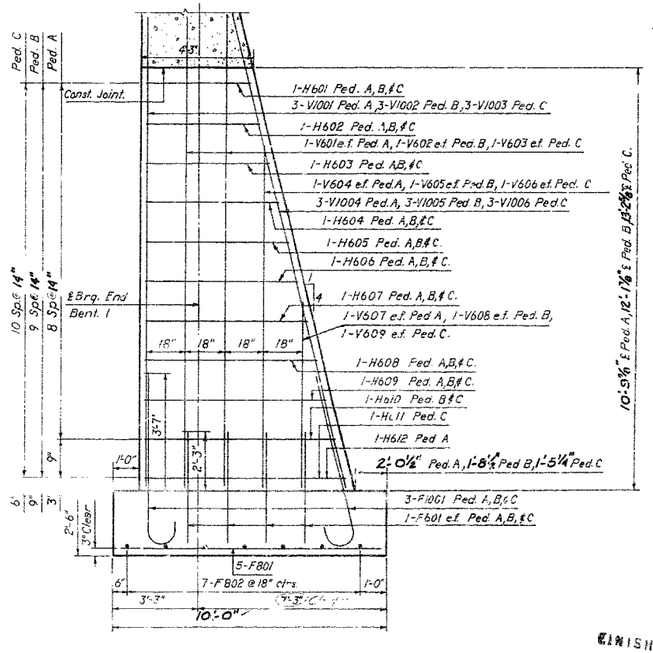


SECTION B-B

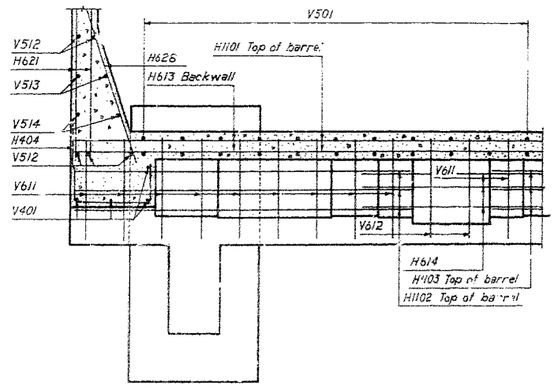


SECTION D-D

n.f. = near face
e.f. = each face
f.f. = far face
Ped. = pedestal

Note: Dimensions to surfaces receiving joint filler are to face of concrete.

HOWARD, NEEDLES, TAMMEN & BERGENDOFF
CONSULTING ENGINEERS
KANSAS CITY NEW YORK

| | | | |
|---|---|---|---|
| MADE L.V.R. | DATE 2-5-62 | TRACED | DATE |
| CHECKED S.H. | DATE 3-8-62 | SCALE | |

NOTE: This drawing is not to scale. Follow dimensions.

DETAILS END BENT 1

FINISHED

Sheet 4 of 4

**BRIDGE: LT. LANE RTE. I-435 OVER RAMPS "G," "H" & "F" & RTE. I-70.**

STATE ROAD - ROUTES I-435 & I-70 INTERCHANGE
FROM ROUTE 40 TO LEEDS ROAD
PROJECT NO. I-435-1(24)(RTE. I-435) STA. 380+98.46 (LT. LANE)

**JACKSON COUNTY**

A-993

FINAL PLANS

359

# MISSOURI STATE HIGHWAY DEPARTMENT

| FED. ROAD DIST. NO. | STATE | FEDERAL PROJECT NO. & SEC. | FISCAL YEAR | SHEET NO. | TOTAL SHEETS |
|---|---|---|---|---|---|
| 5 | MO | T-435-1(24)18 | | 76 | |
| DIST. NO. | COUNTY | | | ROUTE | SEC. |
| 4 | JACKSON | | | I-435 | |

FINAL PLANS

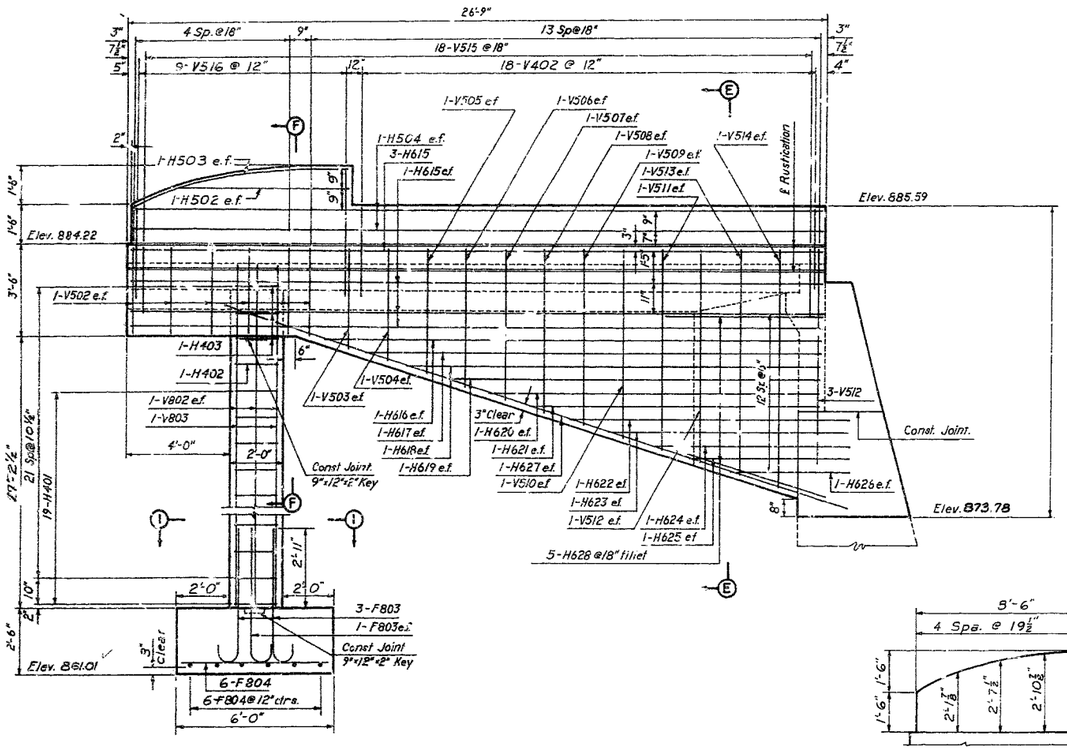


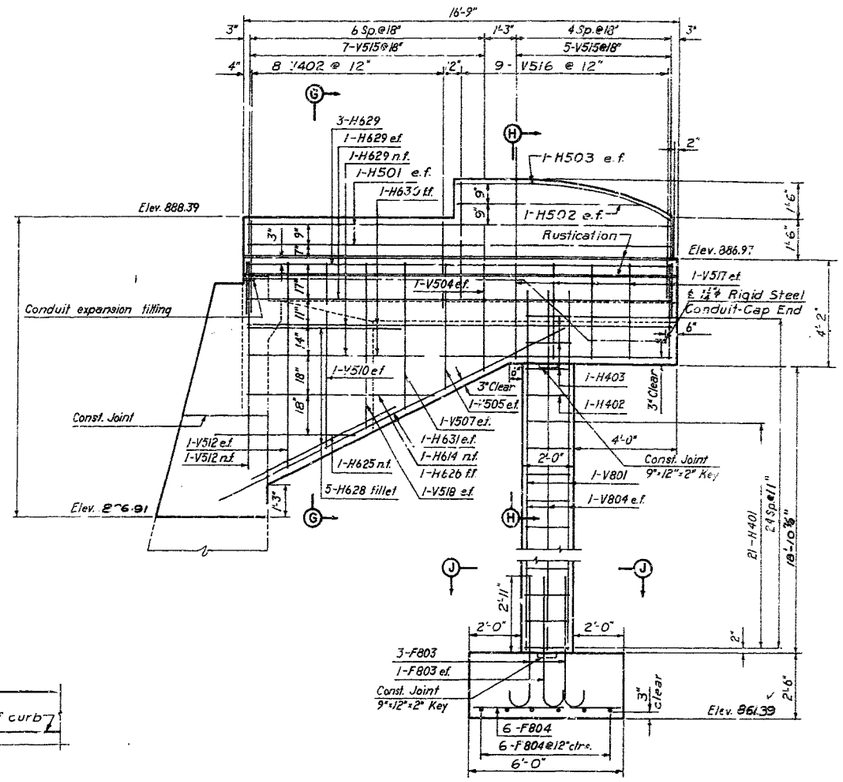


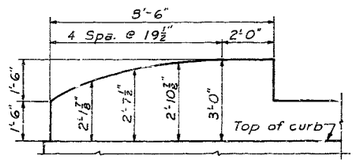


END POST ORDINATES

WEST WINGWALL ELEVATION

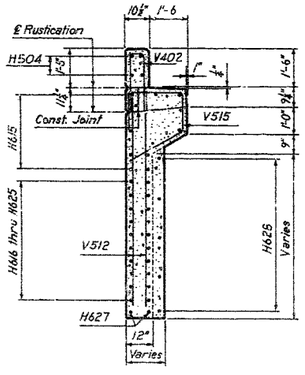


SECTION E-E

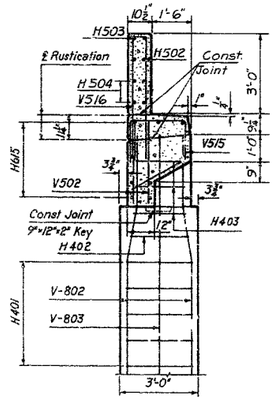


SECTION F-F

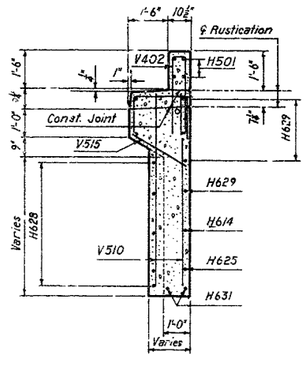


SECTION G-G

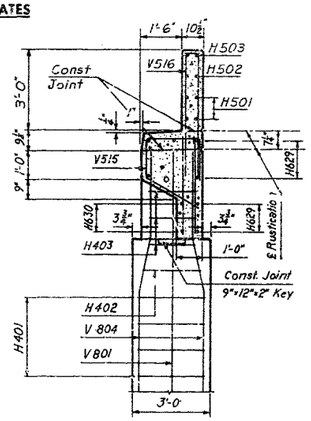


SECTION H-H

EAST WINGWALL ELEVATION

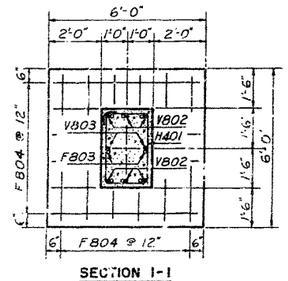


SECTION I-I
(Section J-J Similar)

**LEGEND**
n.f. = near face
f.f. = far face
e.f. = each face

FINISHED

HOWARD, NEEDLES, TAMMEN & BERGENDOFF
CONSULTING ENGINEERS
KANSAS CITY NEW YORK

| MADE L.V.R. | DATE 2-5-62 | TRACED | DATE |
|---|---|---|---|
| CHECKED S.A.L. | DATE 3-9-62 | SCALE | |

NOTE: This drawing is not to scale. Follow dimensions.

DETAILS END BENT 1

FINISHED

SHEET 6A OF 4

FINAL PLANS

**BRIDGE: LT. LANE RTE. I-435 OVER RAMPS "G," "H" & "F" & RTE. I-70**

STATE ROAD - ROUTES I-435 & I-70 INTERCHANGE
FROM ROUTE 40 TO LEEDS ROAD
PROJECT NO. I-435-1(24)(RTE. I-435) STA. 380+98.46 (LT. LANE)

**JACKSON COUNTY**

FINISHED

A-993

360

# MISSOURI STATE HIGHWAY DEPARTMENT

| FED. ROAD DIST. NO. | STATE | FED. AID PROJ. NO. | FISCAL YEAR | SHEET NO. | TOTAL SHEETS |
|---|---|---|---|---|---|
| 5 | MO. | | 19 | | |

(5)

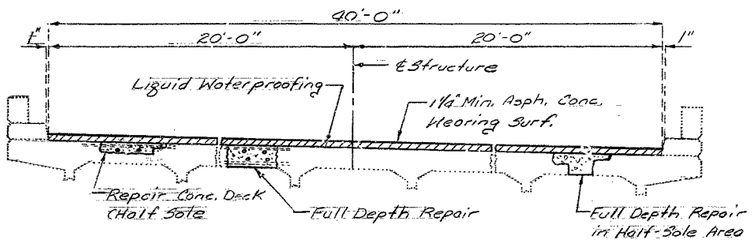


PART SECTION THRU SLAB

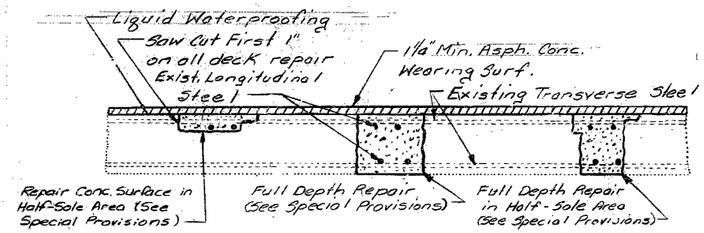


REPAIR AREAS

Note: Outline of old work is indicated by light dotted lines. Heavy lines indicate new work.

| ESTIMATED QUANTITIES | | TOTAL |
|---|---|---|
| Repair Conc. Deck (Half-Soling) | Sq. Ft. | 381 |
| Full Depth Repair | Sq. Ft. | 190 |
| Bridge Deck Waterproofing (Liquid) | Sq. Yd. | 2116 |
| Asph. Cement (Asph. Conc.) 60-70 or AC-20 | Ton | 7.3 |
| Mineral Aggr. (Asph. Conc.) (Type A Mix) | Ton | 138 |
| Preformed Compression Expansion Jt. Seal (2") In. | L.F. | 30 ⚠ 40 |
| Preformed Compression Expansion Jt. Seal (3½") In. | L.F. | 40 ⚠ |
| | | |

⚠ 2½"

BRIDGE : LT. LANE RTE. I-435 OVER RAMPS "G" "H" "F" & RTE. I-70

JOB NO. 4-I-435-514

⚠ Revised: 6-8-83 PROJ. NO. IR-435-1(165)

Sheet No. 1 of 4 JACKSON COUNTY A-993R

B.M.

**BRIDGE**

**STATE ROAD**

**ABOUT**

**PROJECT NO.** IR-435-1(165) **STA.**

**JOB NO.** 4-I-435-514 **RTE** I-435

Jackson **COUNTY**

**DATE**

| STD. |
|---|
| STD. |
| A-993R |

95

**DESIGNED** 19
**DETAILED** 19
**CHECKED** 19

**Note: This drawing is not to scale. Follow dimensions.**

SEE FINAL PLANS

Sheet No. 1 of 4.

# MISSOURI STATE HIGHWAY DEPARTMENT

| FED. ROAD DIST. NO. | STATE | FED. AID PROJ. NO. | FISCAL YEAR | SHEET NO. | TOTAL SHEETS |
|---|---|---|---|---|---|
| 5 | MO. | | 19 | | |

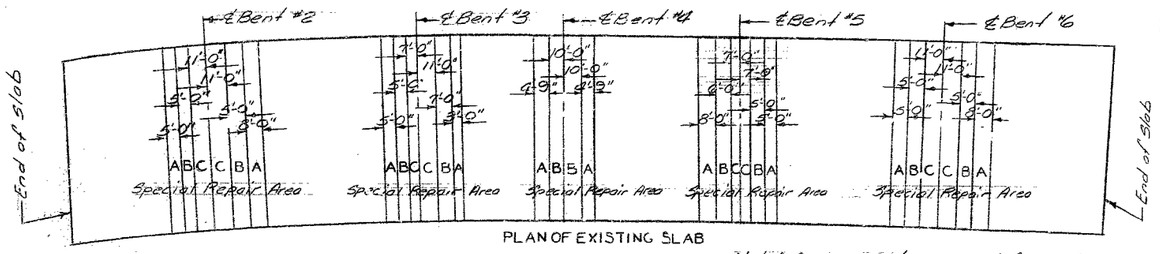


(6)

Note: Any concrete removal for half-sole or full depth repair in areas designated "A" "B" & "C" shall be repaired in alphabetic order. (See Special Provisions.)

Sheet No. 2 of 4

JACKSON COUNTY A-993R

B.M.

**BRIDGE**

**STATE ROAD**

**ABOUT**

**PROJECT NO.** IR-435-1(165) **STA.**

**JOB NO.** 4-I-435-514 **RTE** I-435

Jackson **COUNTY**

DATE

| | |
|---|---|
| STD. | |
| STD. | |
| A-993R | |

**DESIGNED** 19
**DETAILED** 19
**CHECKED** 19

*Note: This drawing is not to scale. Follow dimensions.*

Sheet No. 2 of 4.

96

# MISSOURI STATE HIGHWAY DEPARTMENT

| FED. ROAD DIST. NO. | STATE | FED. AID PROJ. NO. | FISCAL YEAR | SHEET NO. | TOTAL SHEETS |
|---|---|---|---|---|---|
| 5 | MO. | | 19 | | |

(7)

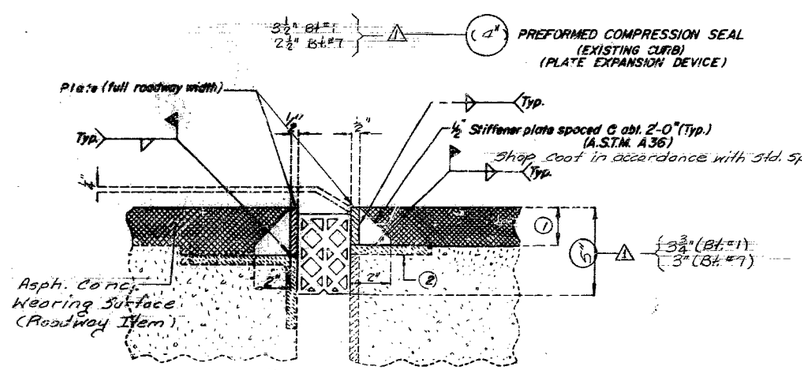


PART CROSS SECTION THRU EXPANSION JOINT

1. 1⅛" Asphalt Concrete Wearing Surface.
2. Cut and smooth existing expansion device plate flush with existing expansion gap.
3. Curb plate (A.S.T.M. A36) shall be galvanized in accordance with A.S.T.M. A123 and A.S.T.M. A153.
4. Concrete anchors shall be the cone expansion type for hot-dip galvanized bolts or Cast-In-Place Conc. Anchors.

For location of (3) and (4), see sh. no. 4.

TABLE OF TRANSVERSE SEAL TOLERANCES
(INCHES)

| TYPE | "A" (WIDTH) | "B" (HEIGHT) | "C" (SHELL) | "D" (WEBS) | "E"(B3 ONLY) (SMALL WEBS) | |
|---|---|---|---|---|---|---|
| A1 OR B3 | 2.500 +.250 −.000 | 2.750 +.125 −.125 | 0.187 +.046 −.015 | 0.093 +.031 −.015 | 0.062 +.031 −.031 | Bt.=7 |
| A1 OR B3 | 3.000 +.250 −.000 | 3.406 +.187 −.187 | 0.187 +.046 −.015 | 0.125 +.046 −.015 | 0.075 +.046 −.031 | |
| A1 OR B3 | 3.500 +.250 −.000 | 3.500 +.187 −.187 | 0.187 +.046 −.015 | 0.125 +.046 −.015 | 0.097 +.046 −.031 | Bt.=1 |
| A1 OR B3 | 4.000 +.312 −.000 | 4.718 +.250 −.250 | A1: 0.250 +.046 −.031; B3: 0.235 +.046 −.031 | 0.187 +.046 −.015 | 0.111 +.046 −.031 | Bt. #1 & #7 — Omit |
| A1 OR B3 | 4.500 +.312 −.000 | 4.500 +.250 −.250 | 0.250 +.046 −.031 | 0.187 +.046 −.015 | 0.111 +.046 −.031 | |

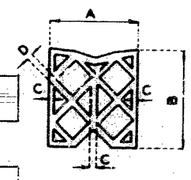


TYPE A1

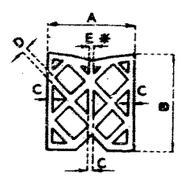


TYPE B3

* OPTIONAL "C"

Note: Plan dimensions are based on right angles.
See Special Provisions for requirements of the compression seal.

⚠ Revised: 6-8-83

Sheet No. 3 of 4

JACKSON COUNTY A-993R

B.M.

**BRIDGE**

**STATE ROAD**

**ABOUT**

**PROJECT NO.** IR-435-1(116)' **STA.**

**JOB NO.** 4-I-435-5'4 **RTE** I-435

Jackson **COUNTY**

DATE

| | |
|---|---|
| STD. | |
| STD. | |
| A-993R | |

DESIGNED 19
DETAILED 19
CHECKED 19

Note: This drawing is not to scale. Follow dimensions.

Sheet No. 3 of 4.

17

# MISSOURI STATE HIGHWAY DEPARTMENT

| FED. ROAD DIST. NO. | STATE | FED. AID PROJ. NO. | FISCAL YEAR | SHEET NO. | TOTAL SHEETS |
|---|---|---|---|---|---|
| 5 | MO. | | 19 | | |

Compression seal and plates shall be bent to conform to new crown and grade of roadway.
2-layers of 30# roofing felt shall be placed between curb plate and recess in curb.
See Special Provisions for modification of expansion device and installation of seal and curb plates.

Note: For (1), (3) and (4), see sh. no. 3.

(8)

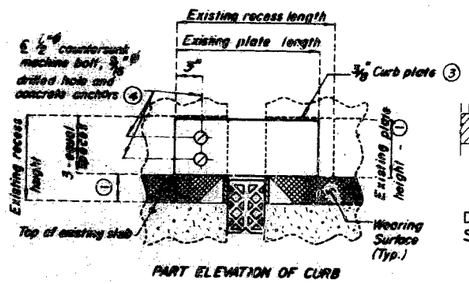


PART ELEVATION OF CURB

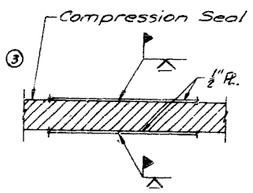


DETAIL OF WELDED SPLICE

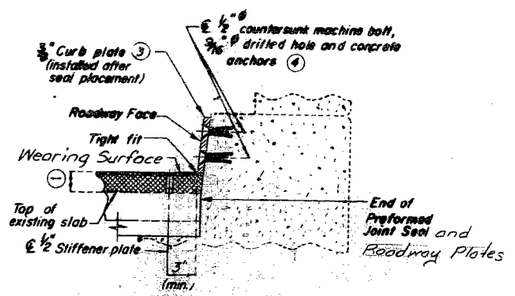


PART SECTION THRU EXP. GAP

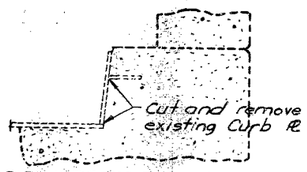


PART SECTION THRU EXISTING CURB

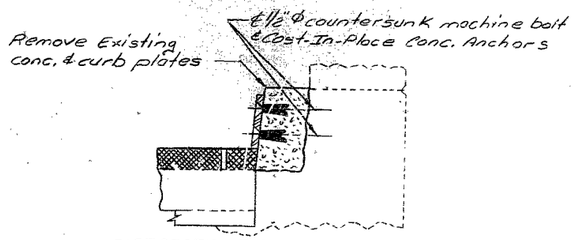


PART SECTION THRU EXP. GAP
(OPTIONAL)
SEE SPECIAL PROVISIONS

Sheet No. 4 of 4

JACKSON COUNTY A-993R

B.M.

**BRIDGE**

**STATE ROAD**

**ABOUT**

**PROJECT NO.** IR-435-1(165) **STA.**

**JOB NO.** 4-I-435-514 **RTE** I-435

Jackson **COUNTY**

DATE

| STD. |
|---|
| STD. |
| A-993R |

**DESIGNED** 19
**DETAILED** 19
**CHECKED** 19

*Note: This drawing is not to scale. Follow dimensions.*

*Sheet No.* 4 *of* 4.

73

# MISSOURI STATE HIGHWAY DEPARTMENT

| FED. ROAD DIST. NO. | STATE | FED. AID PROJ. NO. | FISCAL YEAR | SHEET NO. | TOTAL SHEETS |
|---|---|---|---|---|---|
| 5 | MO. | | 19 | 14 | |

FINAL PLANS

(5)

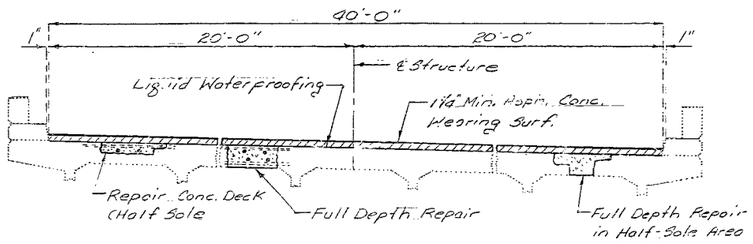


PART SECTION THRU SLAB

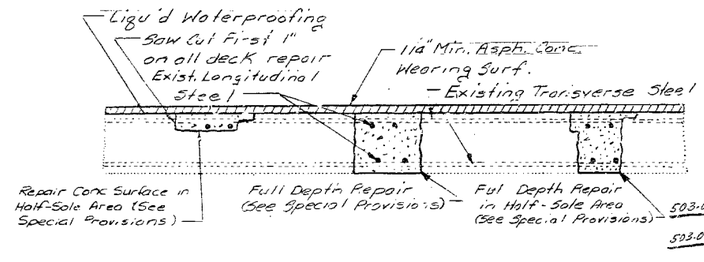


REPAIR AREAS

| ESTIMATED QUANTITIES | | TOTAL |
|---|---|---|
| Repair Conc. Deck (Half-Soling) | Sq. Ft. | 455 |
| Full Depth Repair | Sq. Ft. | 0 |
| Bridge Deck Waterproofing (Liquid) | Sq. Yd. | 2116 |
| Asph. Cement (Asph. Conc.) 60-70 or AC-20 | Ton | 8.1 |
| Mineral Aggr. (Asph. Conc.) (Type A Mix) | Ton | 171 |
| Preformed Compression Expansion Jt. Seal (2") In. | L.F. | 0 |
| Preformed Compression Expansion Jt. Seal (3½") In. | L.F. | 40 |
| Preformed Compression Expansion Jt. Seal (2½") In. | L.F. | 48 |

Note: Outline of old work is indicated by light dotted lines. Heavy lines indicate new work.

Sheet No. 1 of 4

BRIDGE: LT. LANE RTE. I-435 OVER RAMPS "G" "H" "F" & RTE. I-70

JOB NO. 4-I-435-514

PROJ. NO IR-435-1(165)

JACKSON COUNTY A-993R

B.M.

**BRIDGE**

**STATE ROAD**

**ABOUT**

**PROJECT NO.** IR-435-1(165) **STA.**

**JOB NO.** 4-I-435-514 **RTE** I-435

Jackson **COUNTY**

DATE

| | |
|---|---|
| STD. | |
| STD. | |
| S-993R | |

DESIGNED 19
DETAILED 19
CHECKED 19

*Note: This drawing is not to scale. Follow dimensions.*

# MISSOURI HIGHWAY AND TRANSPORTATION COMMISSION

| State | Proj. No. | Sheet No. |
|---|---|---|
| MO | | B141 |
| SEC/SUR 19 | TWP 49N | RGE 32W |

## U.I.P. AND REDECK (50', 65', 50') CONTINUOUS COMPOSITE WIDE FLANGE BEAM SPANS

REVISED NOV 5 2002

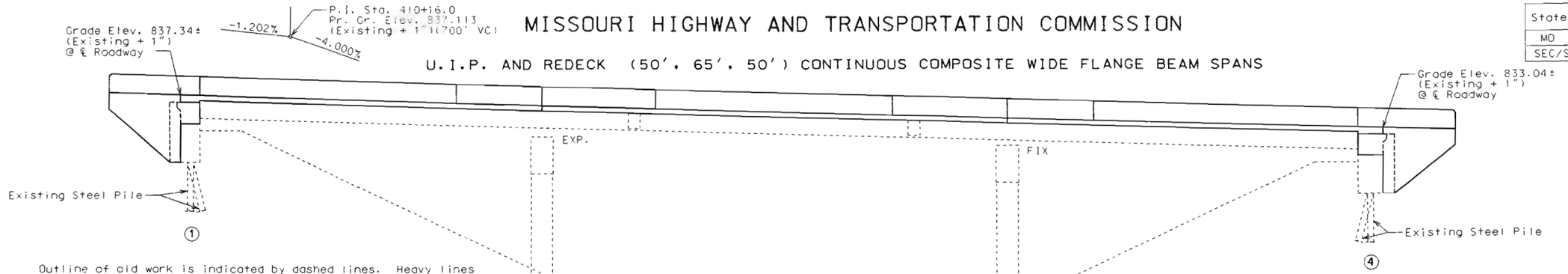


Outline of old work is indicated by dashed lines. Heavy lines indicate new work.

GENERAL ELEVATION

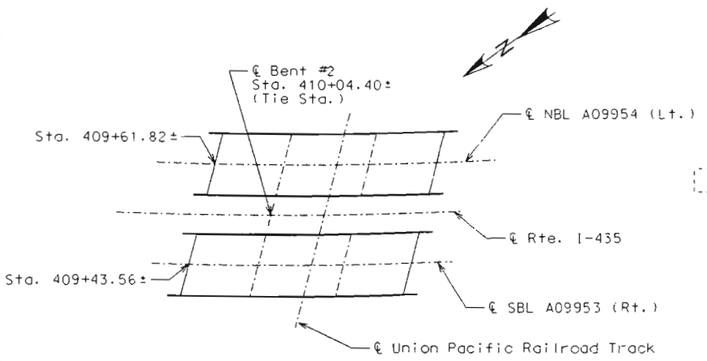


LOCATION SKETCH

## ESTIMATED QUANTITIES

| | ITEM | | SUBSTR. | SUPERSTR. | TOTAL |
|---|---|---|---|---|---|
| ** | Removal of Existing Bridge Deck | sq. foot | | 7833 | 7833 |
| | Special Work | lump sum | | | 1 |
| | Partial Removal of Substructure Concrete | lump sum | | | 1 |
| | Class 1 Excavation | cu. yard | 50 | | 50 |
| | Bridge Approach Slab (Bridge) | sq. yard | | 254 | 254 |
| | Slab on Steel | sq. yard | | 877 | 877 |
| * | Safety Barrier Curb | linear foot | | 378 | 378 |
| | Laminated Neoprene Bearing Pad (Tapered) | each | | 4 | 4 |
| | Laminated Neoprene Bearing Pad (Steel Structures) | each | | 4 | 4 |
| | Reinforcing Steel (Bridges) | pound | 210 | | 210 |
| | Mechanical Bar Splice | each | | 1236 | 1236 |
| | Fabricated Structural Low Alloy Steel (I-Beam) ASTM A709 Grade 50 | pound | | 44.520 | 44.520 |
| | Strengthening Existing Stringers | lump sum | | | 1 |
| | Strengthening Existing Brg. Stiff. (Stringers 1, 5&6) | lump sum | | | 1 |
| | Existing Diaphragm Connections to Flange | lump sum | | | 1 |
| | Painting (Existing and New Steel) | lump sum | | | 1 |
| | Transporting Lead Contaminated Residue to Storage Area | lump sum | | | 1 |
| | Transporting Lead Contaminated Residue to the Smelter | lump sum | | | 1 |
| | Disposal of Lead Contaminated Residue | lump sum | | | 1 |
| | Non-Destructive Testing | linear foot | | 78 | 78 |
| | Vertical Drain at Abutments | each | | | 2 |

* Safety barrier curb shall be cast-in-place option or slip-form option.
** Includes removal and disposal of slab, curbs and rails.

All B-2 Concrete is included in the Estimated Quantities for Slab on Steel.

All reinforcement in the end bents is included in the Estimated Quantities for Slab on Steel.

Miscellaneous:

High strength bolts, nuts and washers will be sampled for quality assurance as specified in Section 106 of the Missouri Standard Specifications and Field Section (FS-712) from Materials Manual.

Outline of old work is indicated by dashed lines. Heavy lines indicate new work.

Contractor shall verify all dimensions in field before ordering new material.

Bars bonded in old concrete not removed shall be cleanly stripped and embedded into new concrete where possible. If length is available, old bars shall extend into new concrete at least 40 diameters for smooth bars and 30 diameters for deformed bars, unless otherwise noted.

Resin Anchors:

The contractor shall use one of the resin anchor systems listed in the job special provisions. These anchor systems shall be installed according to the manufacturer's specifications, except as modified by the job special provisions.

Cost of furnishing and installing the anchor system complete in place shall be included in the contract unit price for Special Work (Bridges).

The ¾" diameter resin anchor systems shall have a minimum ultimate pullout strength of 20.400 lbs. in concrete with f'c = 4.000 psi. see Special Provisions.

Traffic Handling:

See sheet no. 2 for staging plan.

Traffic over structure to be maintained during construction, see roadway plans for traffic control.

Bridge Approach Slab:

Top of Bridge Approach Slab shall be poured flush with top of new wearing surface.

Roadway surfacing adjacent to bridge ends to match new bridge surface (Roadway Item).

## ESTIMATED QUANTITIES FOR SLAB ON STEEL

| Item | | Total |
|---|---|---|
| Reinforcing Steel (Plain) | pound | 3420 |
| Reinforcing Steel (Epoxy Coated) | pound | 74.970 |
| Concrete (Class B-2) | cu. yard | 265.0 |

The table of Estimated Quantities for Slab on Steel represents the quantities used by the state in preparing the cost estimate for concrete slabs. Variations may be encountered in these estimated quantities, but these variations cannot be used for an adjustment in the contract unit price per square yard of Slab on Steel. See Special Provisions for method of forming slab.

## GENERAL NOTES:

Design Specifications:
AASHTO - 1996 and Interims thru 2000
Load Factor Design
Seismic Performance Category A

Design Loading:
HS20 Modified
35 #/Sq. Ft. Future Wearing Surface
Military 24.000# Tandem Axle
Earth - 120 #/Cu. Ft.
Equivalent Fluid Pressure 45 #/Cu. Ft.
Fatigue Stress - Case I

Design Unit Stresses:
Class B-1 Concrete (Safety Barrier Curb) f'c = 4.000 psi
Class B-2 Concrete (Superstructure, except Safety Barrier Curb) f'c = 4.000 psi
Class B-2 Concrete (Substructure, End Bt. Wings & Beam Seats and Bent Beam Seats) f'c = 4.000 psi
Reinforcing Steel (Grade 60) fy = 60.000 psi
Structural Low Alloy Steel (ASTM A709 Grade 50) fy = 50.000 psi

Fabricated Steel Connections:
Field connections shall be made with ¾" diameter high strength bolts and 15/16" diameter holes, except as noted.

Joint Filler:
All joint filler shall meet the requirements of Section 1057.2.4 of the Missouri Standard Specifications, except as noted.

Reinforcing Steel:
Minimum clearance to reinforcing steel shall be 1½", unless otherwise shown.

Painting:
Prime Coat (New Steel): The cost of the prime coat shall be included in the contract unit price of the fabricated structural steel. Tint of the prime coat for System G shall be similar to the color of the field coat to be used.
All Existing Structural Steel shall be painted with a two coat Calcium Sulfonate System in accordance with Special Provisions.
All New Structural Steel shall be painted with a Calcium Sulfonate Top Coat in accordance with Special Provisions.

Neoprene Bearing Pads:
The cost of furnishing, fabricating and installing Neoprene Bearing Pads, complete-in-place, will be paid for at the contract unit price for Laminated Neoprene Bearing Pads (Tapered) and Laminated Neoprene Bearing Pad (Steel Structures) per each.
Bearings shall be 60 durometer neoprene pads. The neoprene pads shall be bonded to the bearing seat with an epoxy adhesive as approved by the bearing manufacturer for bonding neoprene to concrete.

B.M. Elev. 832.33 Snaptie @ top of left wingwall on Bent 4 on A-995 (As Shown Original Plans) (Left wing wall to be removed this contract)

STATE OF MISSOURI
GREGORY E. SANDERS
NUMBER E-2000162167
PROFESSIONAL ENGINEER
DATE 11/04/02

# REPAIRS TO SOUTHBOUND BRIDGE OVER UNION PACIFIC RAILROAD

STATE ROAD FROM RTE. 350 NORTH TO RTE. 40

ABOUT 1.1 MILES SOUTH OF RTE.40

PROJECT NO. STA. 409+43.56± (℄ SBL)

JOB NO. J410712 RTE. I-435 SBL

JACKSON COUNTY Date: 4/

| STD. |
|---|
| STD. 609.00 |
| STD. 617.30 |
| STD. 706.35 |
| A09953 |

REV.

Designed JUNE 2002
Detailed JULY 2002
Checked JULY 2002

Note: This drawing is not to scale. Follow dimensions.

Sheet No. 1 of 31

Tri-proj\bridge\j410712_sht01_55_001.dgn 09:28:38 AM 11/04/2002

# MISSOURI HIGHWAY AND TRANSPORTATION COMMISSION

| State | Proj. No. | Sheet No. |
|---|---|---|
| MO | | B141 |
| SEC/SUR 19 | TWP 49N | RGE 32W |

## U.I.P. AND REDECK (50', 65', 50') CONTINUOUS COMPOSITE WIDE FLANGE BEAM SPANS

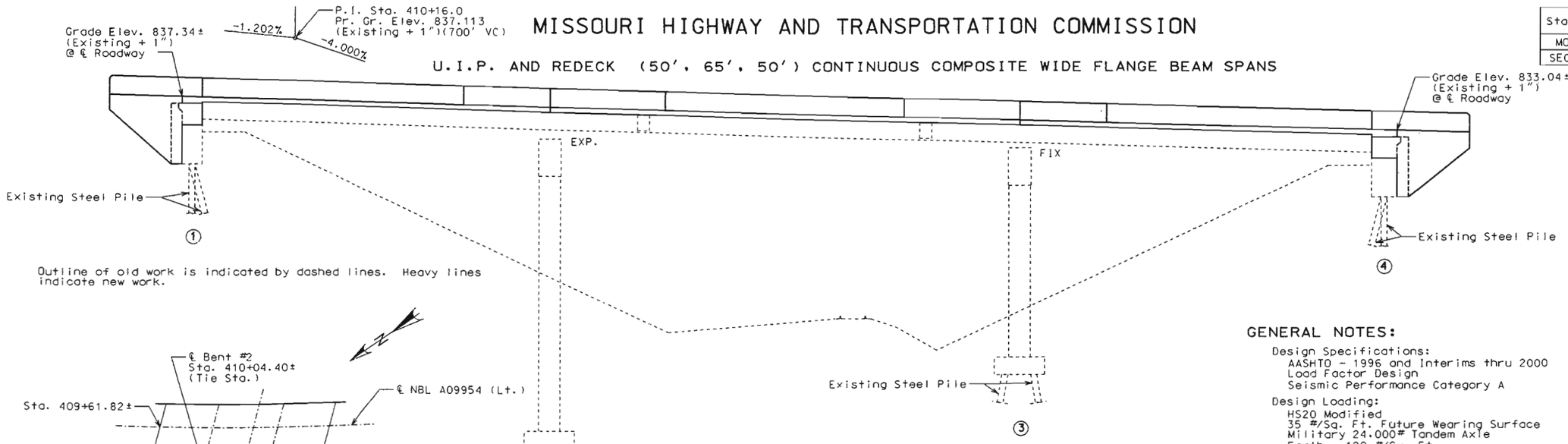


Outline of old work is indicated by dashed lines. Heavy lines indicate new work.

GENERAL ELEVATION

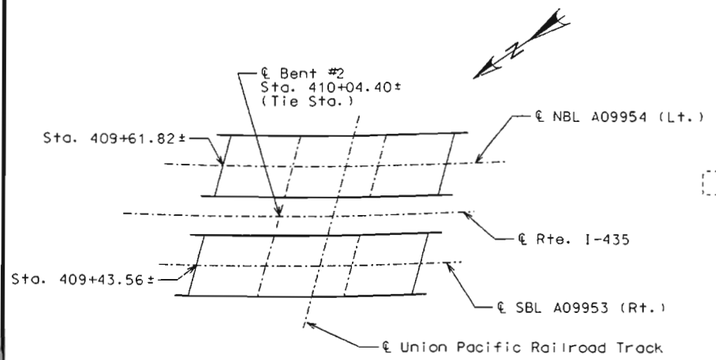


LOCATION SKETCH

## ESTIMATED QUANTITIES

| | ITEM | | SUBSTR. | SUPERSTR. | TOTAL |
|---|---|---|---|---|---|
| ** | Removal of Existing Bridge Deck | sq. foot | | 7833 | 7833 |
| | Special Work | lump sum | | | 1 |
| | Partial Removal of Substructure Concrete | lump sum | | | 1 |
| | Class 1 Excavation | cu. yard | 50 | | 50 |
| | Bridge Approach Slab (Bridge) | sq. yard | | 254 | 254 |
| | Class B-2 Concrete | cu. yard | 55.3 | | 55.3 |
| | Slab on Steel | sq. yard | | 877 | 877 |
| * | Safety Barrier Curb | linear foot | | 378 | 378 |
| | Laminated Neoprene Bearing Pad (Tapered) | each | | 4 | 4 |
| | Laminated Neoprene Bearing Pad (Steel Structures) | each | | 4 | 4 |
| | Reinforcing Steel (Bridges) | pound | 210 | | 210 |
| | Mechanical Bar Splice | each | | 1236 | 1236 |
| | Fabricated Structural Low Alloy Steel (I-Beam) ASTM A709 Grade 50 | pound | | 44,520 | 44,520 |
| | Strengthening Existing Stringers | lump sum | | | 1 |
| | Strengthening Existing Brg. Stiff. (Stringers 1, 5&6) | lump sum | | | 1 |
| | Existing Diaphragm Connections to Flange | lump sum | | | 1 |
| | Painting (Existing and New Steel) | lump sum | | | 1 |
| | Transporting Lead Contaminated Residue to Storage Area | lump sum | | | 1 |
| | Transporting Lead Contaminated Residue to the Smelter | lump sum | | | 1 |
| | Disposal of Lead Contaminated Residue | lump sum | | | 1 |
| | Non-Destructive Testing | linear foot | | 78 | 78 |
| | Vertical Drain at Abutments | each | | | 2 |

* Safety barrier curb shall be cast-in-place option or slip-form option.
** Includes removal and disposal of slab, curbs and rails.
All concrete above top of the existing beam at end bents (except wings) is included with the Superstructure Quantities.

Miscellaneous:
High strength bolts, nuts and washers will be sampled for quality assurance as specified in Section 106 of the Missouri Standard Specifications and Field Section (FS-712) from Materials Manual.
Outline of old work is indicated by dashed lines. Heavy lines indicate new work.

Contractor shall verify all dimensions in field before ordering new material.

Bars bonded in old concrete not removed shall be cleanly stripped and embedded into new concrete where possible. If length is available, old bars shall extend into new concrete at least 40 diameters for smooth bars and 30 diameters for deformed bars, unless otherwise noted.

Resin Anchors:
The contractor shall use one of the resin anchor systems listed in the job special provisions. These anchor systems shall be installed according to the manufacturer's specifications, except as modified by the job special provisions.

Cost of furnishing and installing the anchor system complete in place shall be included in the contract unit price for Special Work (Bridges).

The ¾" diameter resin anchor systems shall have a minimum ultimate pullout strength of 20,400 lbs. in concrete with f'c = 4,000 psi, see Special Provisions.

Traffic Handling:
See sheet no. 2 for staging plan.
Traffic over structure to be maintained during construction, see roadway plans for traffic control.

Bridge Approach Slab:
Top of Bridge Approach Slab shall be poured flush with top of new wearing surface.
Roadway surfacing adjacent to bridge ends to match new bridge surface (Roadway Item).

## ESTIMATED QUANTITIES FOR SLAB ON STEEL

| Item | | Total |
|---|---|---|
| Reinforcing Steel (Plain) | pound | 3420 |
| Reinforcing Steel (Epoxy Coated) | pound | 74,970 |
| Concrete (Class B-2) | cu. yard | 212 |

The table of Estimated Quantities for Slab on Steel represents the quantities used by the state in preparing the cost estimate for concrete slabs. Variations may be encountered in these estimated quantities, but these variations cannot be used for an adjustment in the contract unit price per square yard of Slab on Steel. See Special Provisions for method of forming slab.

## GENERAL NOTES:

Design Specifications:
AASHTO - 1996 and Interims thru 2000
Load Factor Design
Seismic Performance Category A

Design Loading:
HS20 Modified
35 #/Sq. Ft. Future Wearing Surface
Military 24,000# Tandem Axle
Earth - 120 #/Cu. Ft.
Equivalent Fluid Pressure 45 #/Cu. Ft.
Fatigue Stress - Case I

Design Unit Stresses:
Class B-1 Concrete (Safety Barrier Curb) f'c = 4,000 psi
Class B-2 Concrete (Superstructure, except Safety Barrier Curb) f'c = 4,000 psi
Class B-2 Concrete (Substructure, End Bt. Wings & Beam Seats and Bent Beam Seats) f'c = 4,000 psi
Reinforcing Steel (Grade 60) fy = 60,000 psi
Structural Low Alloy Steel (ASTM A709 Grade 50) fy = 50,000 psi

Fabricated Steel Connections:
Field connections shall be made with ¾" diameter high strength bolts and 15/16" diameter holes, except as noted.

Joint Filler:
All joint filler shall meet the requirements of Section 1057.2.4 of the Missouri Standard Specifications, except as noted.

Reinforcing Steel:
Minimum clearance to reinforcing steel shall be 1½", unless otherwise shown.

Painting:
Prime Coat (New Steel): The cost of the prime coat shall be included in the contract unit price of the fabricated structural steel. Tint of the prime coat for System G shall be similar to the color of the field coat to be used.
All Existing Structural Steel shall be painted with a two coat Calcium Sulfonate System in accordance with Special Provisions.
All New Structural Steel shall be painted with a Calcium Sulfonate Top Coat in accordance with Special Provisions.

Neoprene Bearing Pads:
The cost of furnishing, fabricating and installing Neoprene Bearing Pads, complete-in-place, will be paid for at the contract unit price for Laminated Neoprene Bearing Pads (Tapered) and Laminated Neoprene Bearing Pad (Steel Structures) per each.

Bearings shall be 60 durometer neoprene pads. The neoprene pads shall be bonded to the bearing seat with an epoxy adhesive as approved by the bearing manufacturer for bonding neoprene to concrete.

VOID

B.M. Elev. 832.33 Snaptie @ top of left wingwall on Bent 4 on A-995 (As Shown Original Plans) (left wing wall to be removed this contract)

GREGORY E. SANDERS NUMBER E-24076 STATE OF MISSOURI REGISTERED ENGINEER

DATE 8-22-02

# REPAIRS TO SOUTHBOUND BRIDGE OVER UNION PACIFIC RAILROAD

STATE ROAD FROM RTE. 350 NORTH TO RTE. 40

ABOUT 1.1 MILES SOUTH OF RTE. 40

PROJECT NO. STA. 409+43.56± (℄ SBL)

JOB NO. J4I0712 RTE. I-435 SBL

JACKSON COUNTY

Date: / /

| STD. |
|---|
| STD. 609.00 |
| STD. 617.30 |
| STD. 706.35 |
| A09953 REV. |

Designed JUNE 2002
Detailed JULY 2002
Checked JULY 2002

Note: This drawing is not to scale. Follow dimensions.



T:\br-proj\houchg\j4i0712\a09953\a09953_001.dgn 12:14:38 PM 08/23/2002

| State | Proj. No. | Sheet No. |
|---|---|---|
| MO | | B142 |

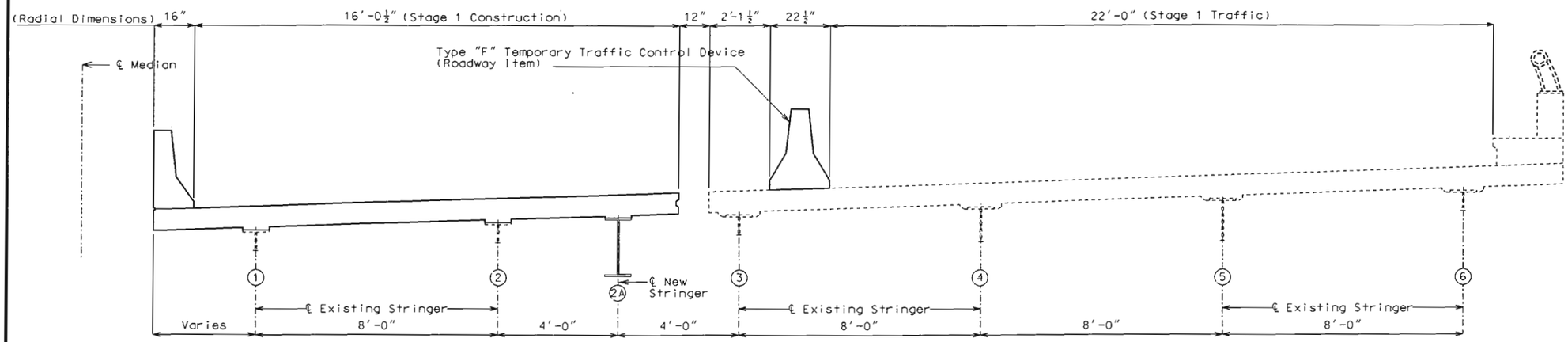


STAGE 1 CONSTRUCTION

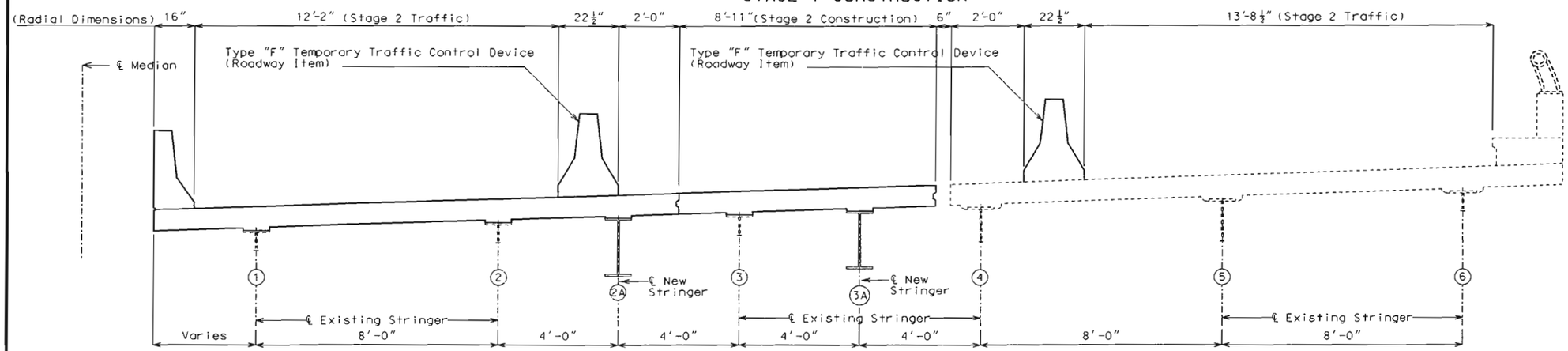


STAGE 2 CONSTRUCTION

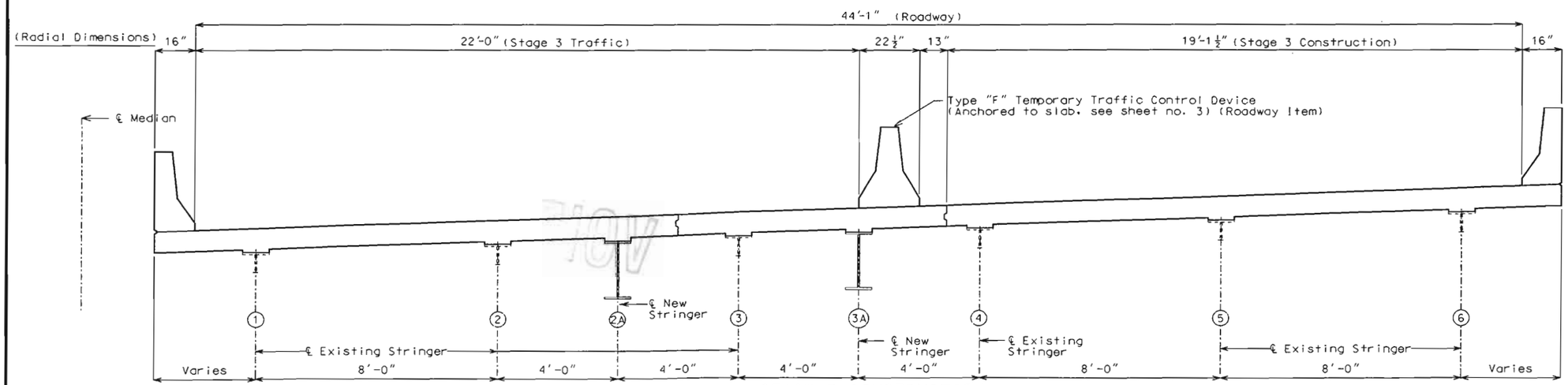


STAGE 3 CONSTRUCTION

GREGORY E. SANDERS NUMBER E-2000102187

DATE 8-22-02

Detailed May 2002
Checked July 2002

Note: This drawing is not to scale. Follow dimensions.

Sheet No. 2 of 31

JACKSON COUNTY

A09953

| State | Proj. No. | Sheet No. |
|---|---|---|
| MO | | B143 |

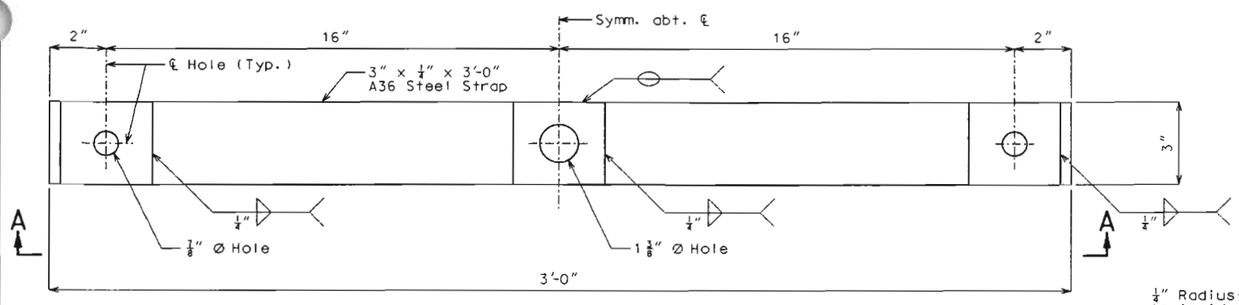


PLAN OF TIE-DOWN STRAP

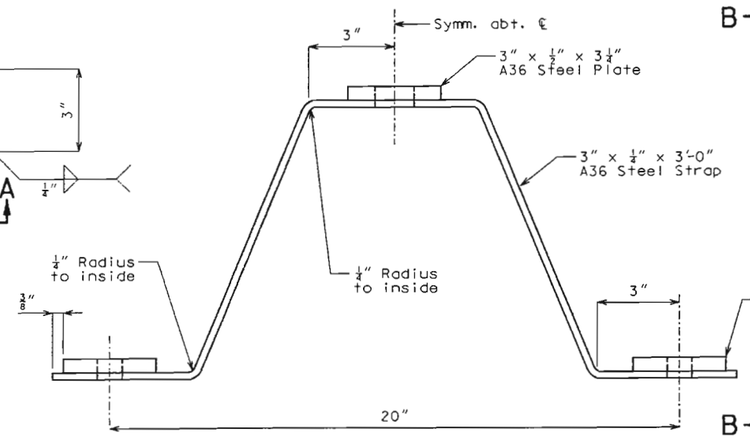


ELEVATION A-A

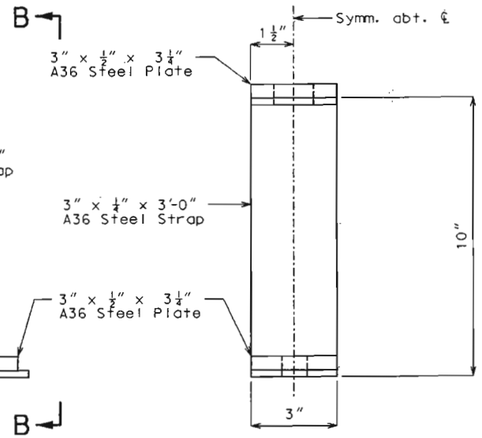


ELEVATION B-B

# DETAILS OF TYPE F TEMPORARY BARRIER TIE-DOWN STRAP

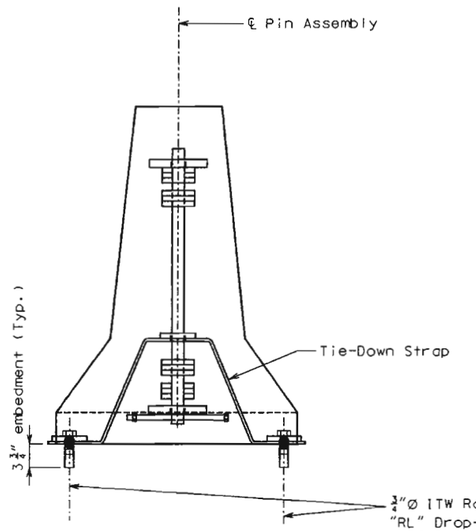


SECTION NEAR PIN ASSEMBLY

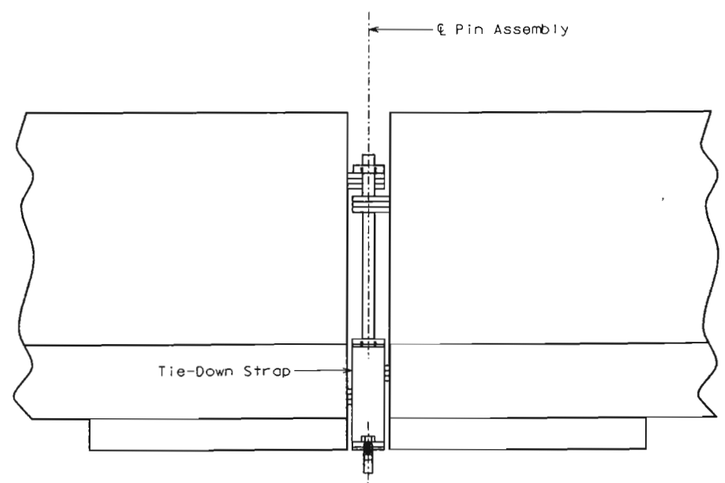


PART ELEVATION OF TEMPORARY BARRIER

Note: Barriers must be pulled tight during installation to remove slack and provide longitudinal tension during impact.

# DETAILS OF TYPE F TEMPORARY BARRIER

Note: Tie-Down Strap and Anchor Systems shall only be used for Stage III Traffic (See Sheet No. 2).
Contractor shall verify all dimensions in field before ordering new material.

Cost of furnishing and installing the anchor system complete-in-place shall be considered incidental to other pay items.
See Missouri Standard Plans 617.30 for details not shown.

Locate and clear slab steel before drilling for anchors.

See Special Provisions for sealing of holes in deck after removal of tie down bolts used for temporary curb anchorage.

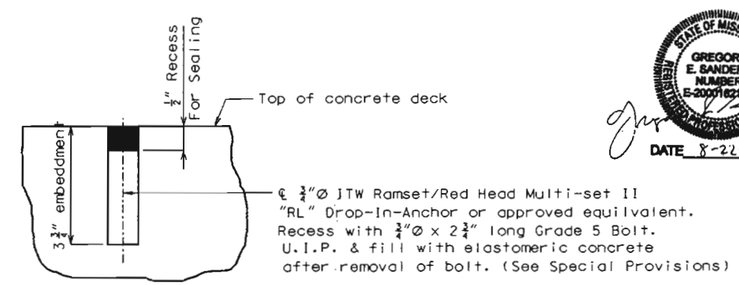


DETAIL SHOWING SEALING OF HOLES AFTER REMOVAL OF TIE DOWN BOLTS

STATE OF MISSOURI
GREGORY E. SANDERS
NUMBER E-2000162187
REGISTERED PROFESSIONAL ENGINEER
DATE 8-22-02

Detailed JULY 2002
Checked JULY 2002

Note: This drawing is not to scale. Follow dimensions.



JACKSON COUNTY A09953

REV.

| State | Proj. No. | Sheet No. |
|---|---|---|
| MO | | B144 |

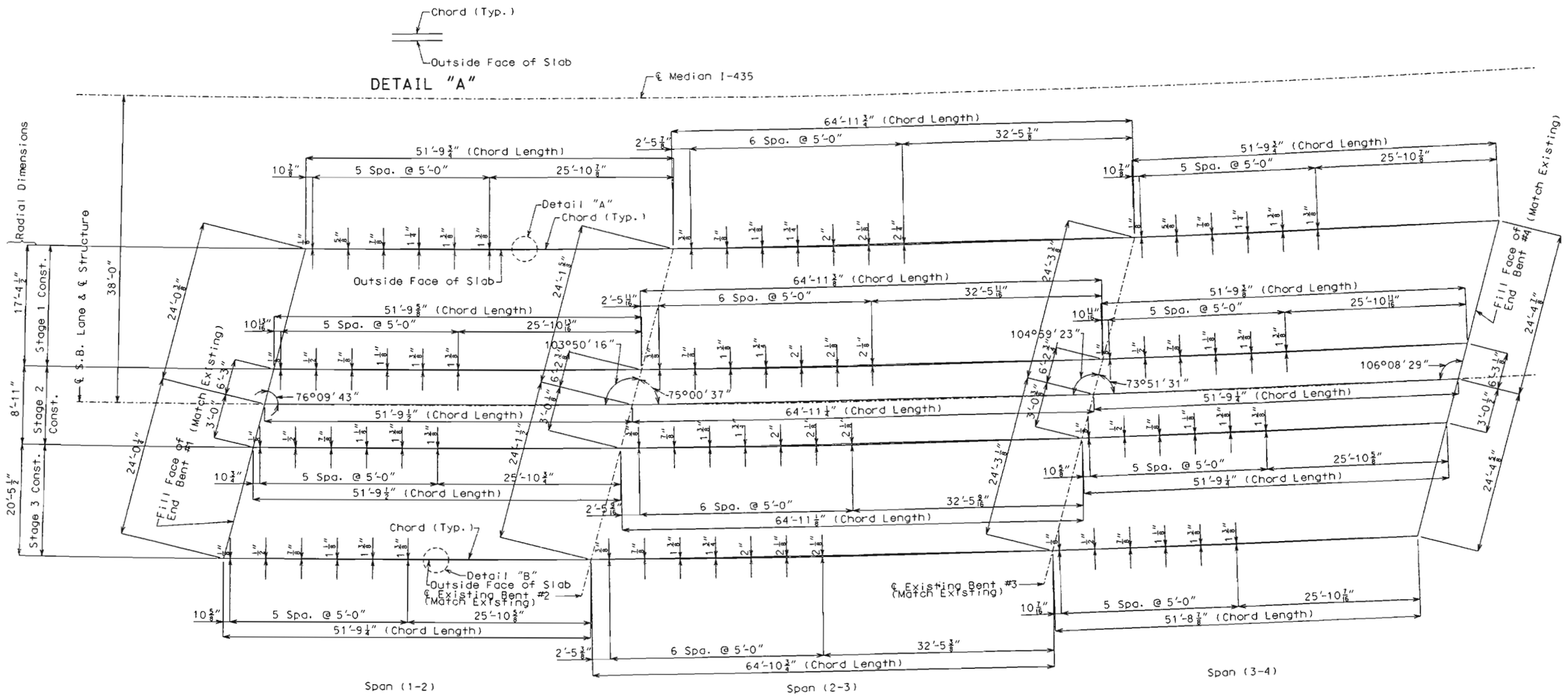


PLAN OF SLAB SHOWING CURVE ORDINATES

Note: All dimensions are horizontal.

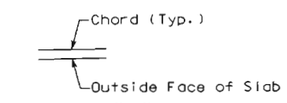


DETAIL "B"

STATE OF MISSOURI
GREGORY E. SANDERS
NUMBER E-2002162167
ENGINEER

DATE 8-22-02

Detailed May 2002
Checked July 2002

Note: This drawing is not to scale. Follow dimensions.



JACKSON COUNTY A09953

REV.

I:\br-proj\bridge\jan0212-a09953\a09953_004N.dgn 11:15:5 AM 09/22/2002

Note: For Elevation A-A & B-B, see sheet No. 7.

| State | Proj. No. | Sheet No. |
|---|---|---|
| MO | | B145 |

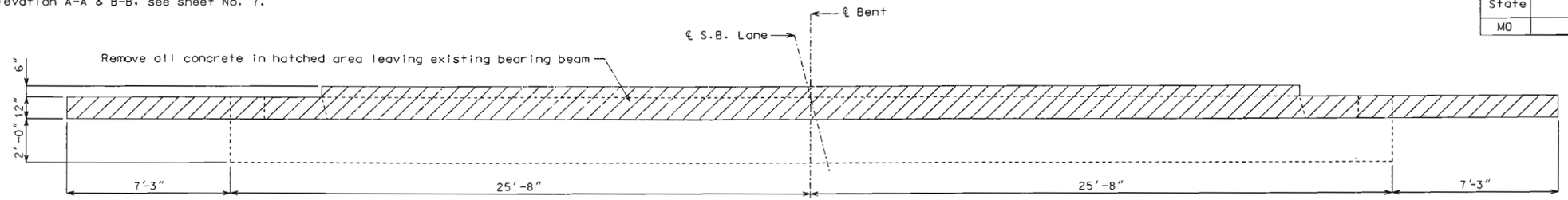


Note: Bend F bars in field to clear stringers.
For reinforcement of safety barrier curb, see sheet No. 25 & 26.
Concrete diaphragms shall be poured prior to the slab, allowing sufficient time for the set of the concrete in the diaphragms.
For section near end bent, see sheet No. 6.

Note: The contractor shall use a mechanical bar splice for H1, H2, H4, H5, H7 & H8 bars at the specified location. The total bar lengths for H1, H2, H4, H5, H7 & H8 bars shown in the Bill of Reinforcing Steel are determined based on the end of the bars being located flush to the face of the construction joint. Extra bar lengths from that specified in the bar list may be required depending on the specific splice system to be used. No payment will be made for additional bar lengths added. See job special provisions for additional requirements of mechanical bar splices. Mechanical bar splices for epoxy coated bars shall be epoxy coated.

## PLAN OF EXISTING BENT SHOWING LIMITS OF CONCRETE REMOVAL

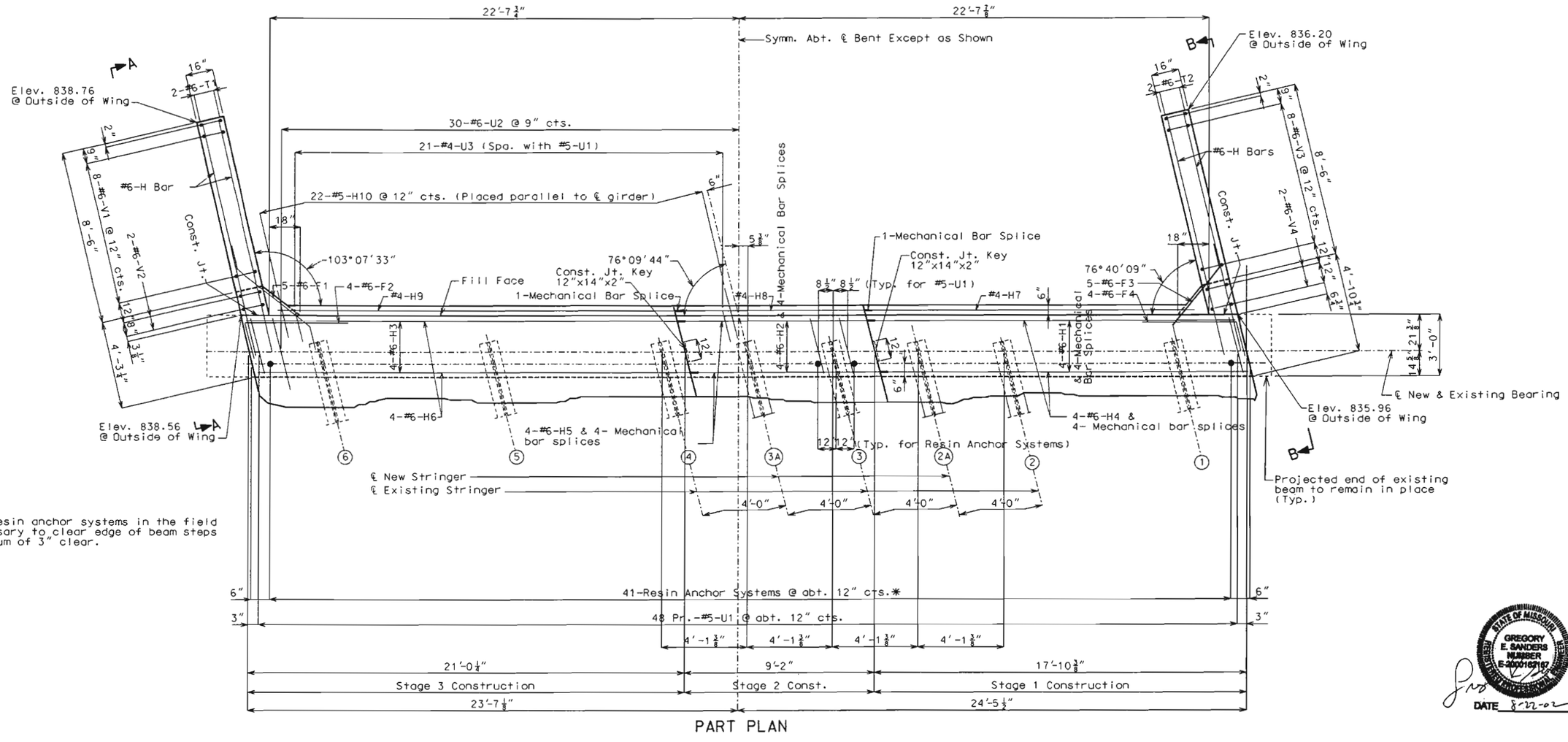


* Adjust resin anchor systems in the field when necessary to clear edge of beam steps by a minimum of 3" clear.

PART PLAN

# DETAILS OF END BENT NO. 1

Detailed May 2002
Checked July 2002

Note: This drawing is not to scale. Follow dimensions.

Sheet No. 5 of 31

JACKSON COUNTY A09953

STATE OF MISSOURI GREGORY E. SANDERS NUMBER E-2000162167 REGISTERED PROFESSIONAL ENGINEER

DATE 8-22-02

| State | Proj. No. | Sheet No. |
|---|---|---|
| MO | | B146 |

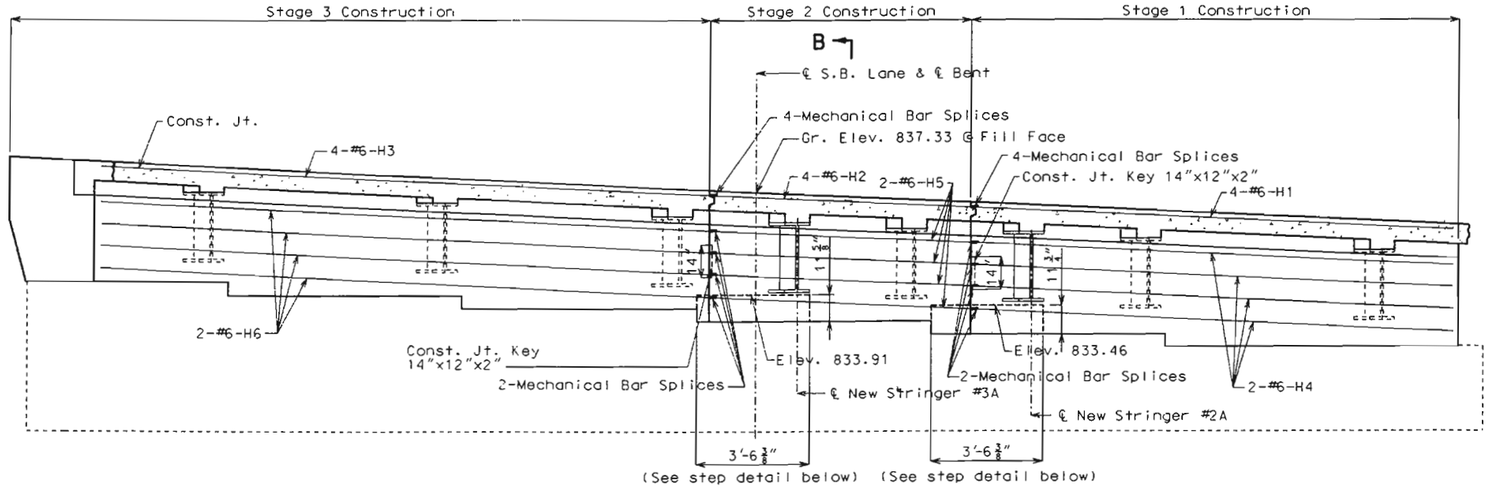


SECTION NEAR END BENT

Note: The contractor shall use a mechanical bar splice for H1, H2, H4, H5, H7 & H8 bars at the specified location. The total bar lengths for H1, H2, H4, H5, H7 & H8 bars shown in the Bill of Reinforcing Steel are determined based on the end of the bars being located flush to the face of the construction joint. Extra bar lengths from that specified in the bar list may be required depending on the specific splice system to be used. No payment will be made for additional bar lengths added. See job special provisions for additional requirements of mechanical bar splices. Mechanical bar splices for epoxy coated bars shall be epoxy coated.

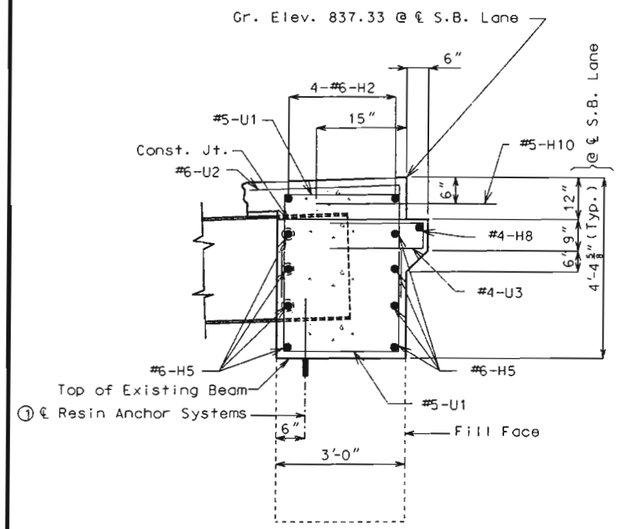


SECTION B-B

① Note: 3/4"Ø bars shall have a 20" Projection into new concrete.

Cost of furnishing and installing resin anchor systems in existing bearing beam shall be included in the contract price bid for Special Work (Bridges) per lump sum.

These anchor systems shall be installed according to the manufacturer's specifications except as modified by the Job Special Provisions and that a #6 grade 60 reinforcing bar 18", except as noted, long shall be substituted for the 3/4" threaded rod stud.

The 3/4" diameter resin anchor systems shall have a minimum ultimate pullout strength of 20,400 lbs. in concrete with f'c=4000 psi. See Special Provisions.

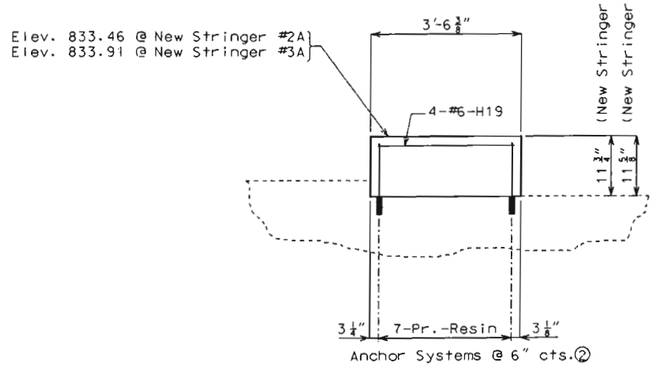


PART ELEVATION A-A

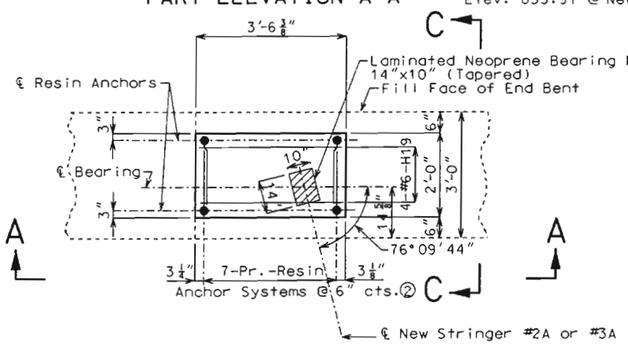


PLAN OF NEW STEP & BEARING ON BEAM FOR STRINGER #2A & #3A

②Use 3/4" diameter resin anchor systems

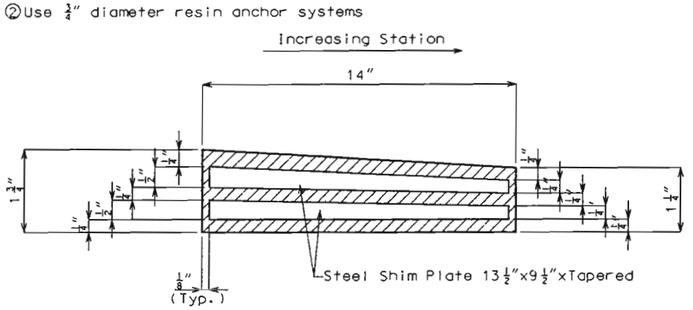


TYPICAL SECTION THRU LAMINATED NEOPRENE BEARING PAD (TAPERED)

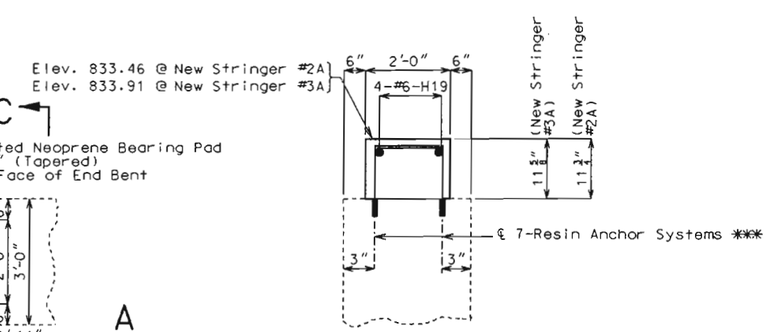


PART SECTION C-C

*** 3/4"Ø bar shall have a 2'-7" projection into new concrete (bend in field)

STATE OF MISSOURI
GREGORY E. SANDERS
NUMBER E-2000162187
REGISTERED PROFESSIONAL ENGINEER
DATE 8-22-02

# DETAILS OF END BENT NO. 1

Detailed July 2002
Checked July 2002

Note: This drawing is not to scale. Follow dimensions.

Sheet No. 6 of 31

JACKSON COUNTY A09953

REV.

T:\br-proj\houchg\j4l0712\A09953\a09953_006N.dgn 11:11:59 AM 08/22/2002

Note: For location of Elevation A-A & B-B, see sheet No. 5.
For R bar reinforcing in wing, see sheet No. 25 & 26.

| State | Proj. No. | Sheet No. |
|---|---|---|
| MO | | 8147 |

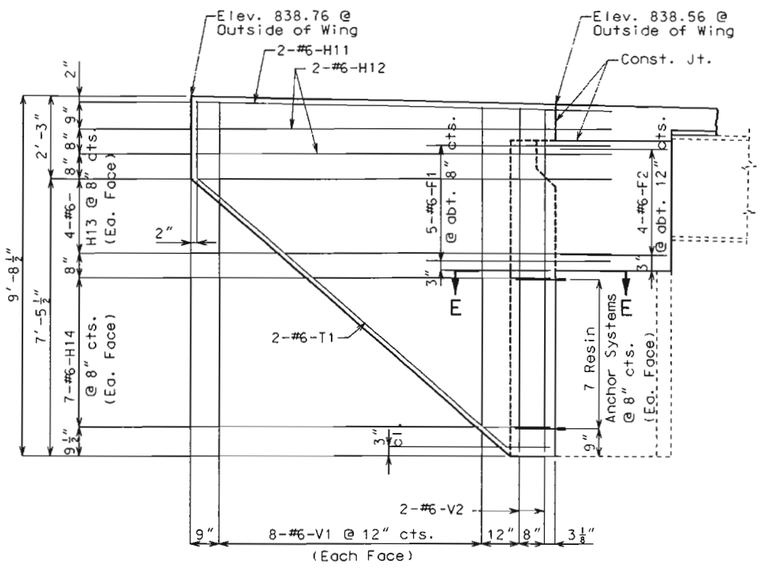


ELEVATION A-A

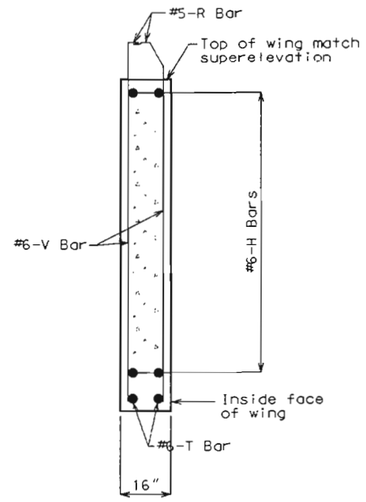


TYPICAL SECTION THRU WING

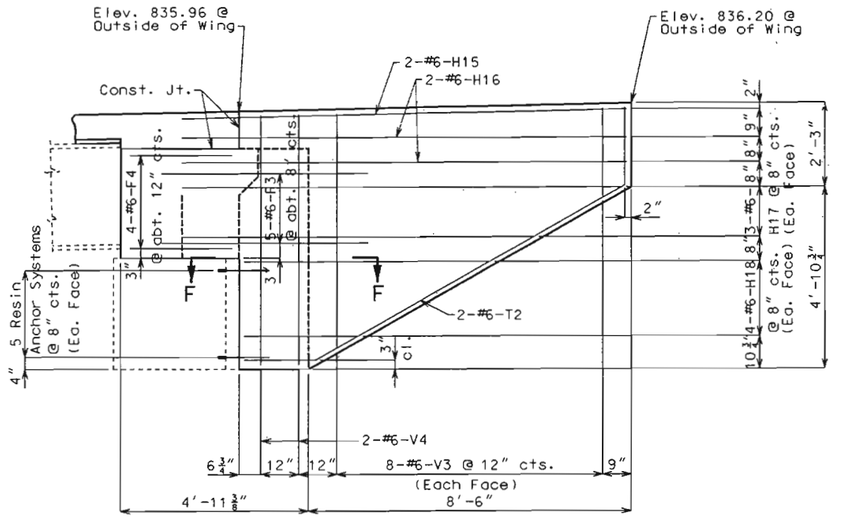


ELEVATION B-B

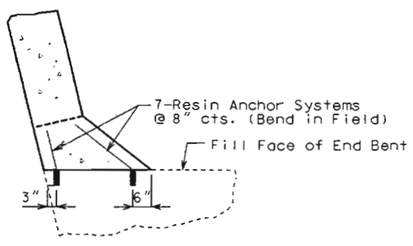


SECTION E-E
(Detail showing resin anchor for wing brace)

Note: ¾"Ø bars shall have a 20" Projection into new concrete (bend bars in field or drill holes at angle).
Cost of furnishing and installing resin anchor systems in existing bearing beam shall be included in the contract price bid for Special Work (Bridges) per lump sum.
These anchor systems shall be installed according to the manufacturer's specifications except as modified by the Job Special Provisions and that a #6 grade 60 reinforcing bar 18", except as noted, long shall be subsituted for the ¾" threaded rod stud.
The ¾" diameter resin anchor systems shall have a minimum ultimate pullout strength of 20,400 lbs. in concrete with f'c=4000 psi. See Special Provisions.

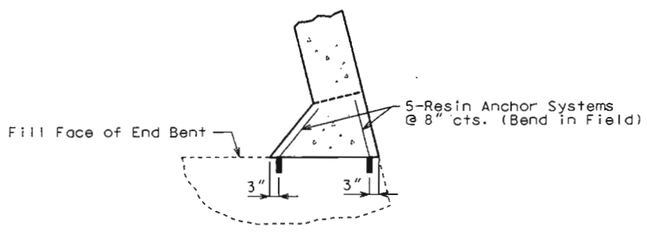


SECTION F-F
(Detail showing resin anchor for wing brace)

## DETAILS OF END BENT NO. 1

Detailed Jun. 2002
Checked July 2002

Note: This drawing is not to scale. Follow dimensions.



JACKSON COUNTY A09953

REV.

T:\br-proj\houchg\j410712\A09953\a09953_007.dgn 11:12:02 AM 08/22/2002

| State | Proj. No. | Sheet No. |
|---|---|---|
| MO | | B148 |

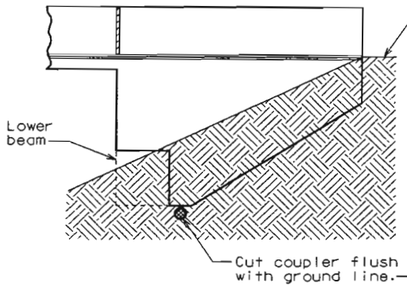


ELEVATION OF WING

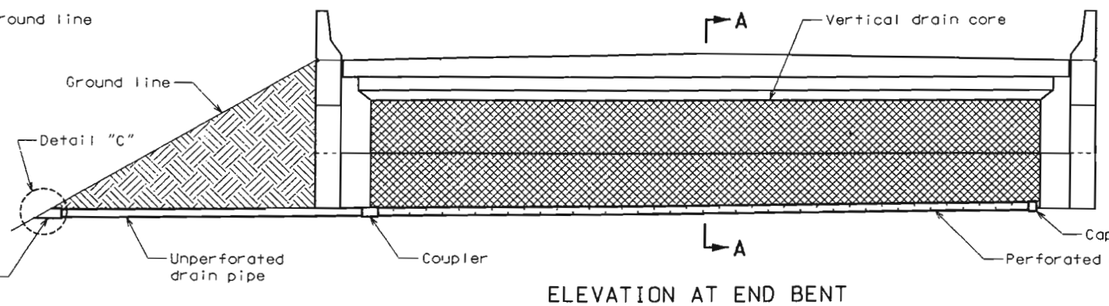


ELEVATION AT END BENT

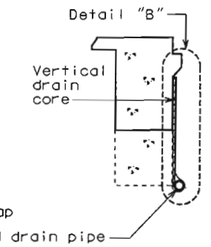


SECTION A-A

Note:
Drain pipe may be either 6" diameter corrugated metallic-coated steel pipe underdrain. 4" diameter corrugated polyvinyl chloride (PVC) drain pipe. or 4" diameter corrugated polyethylene (PE) drain pipe.

Place drain pipe at fill face of end bent and slope to lowest grade of ground line, also missing the lower beam of end bent by 1-1/2". (See elevation at end bent.)

Perforated pipe shall be placed at fill face side at the bottom of end bent and plain pipe shall be used where the vertical drain ends to the exit at ground line.

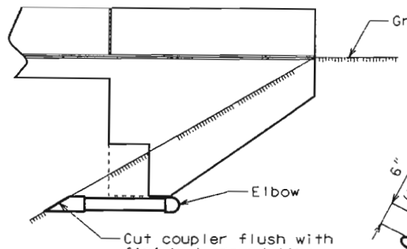


ELEVATION OF WING

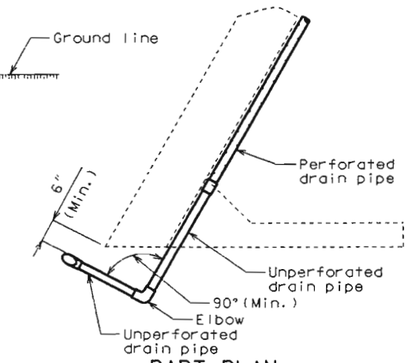


PART PLAN

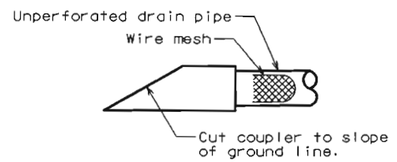


DETAIL "C"

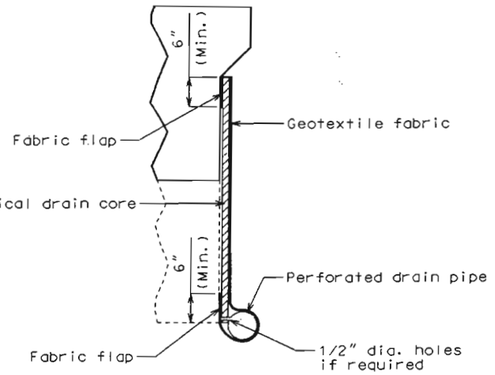


DETAIL "B"

## OPTIONAL BENT DRAIN (*)

(*) Only if rock is encountered at outside of wing.

# VERTICAL DRAIN AT END BENTS

STATE OF MISSOURI
GREGORY E. SANDERS
NUMBER E-2009142167
DATE 8-22-02

| State | Proj. No. | Sheet No. |
|---|---|---|
| MO | | B149 |

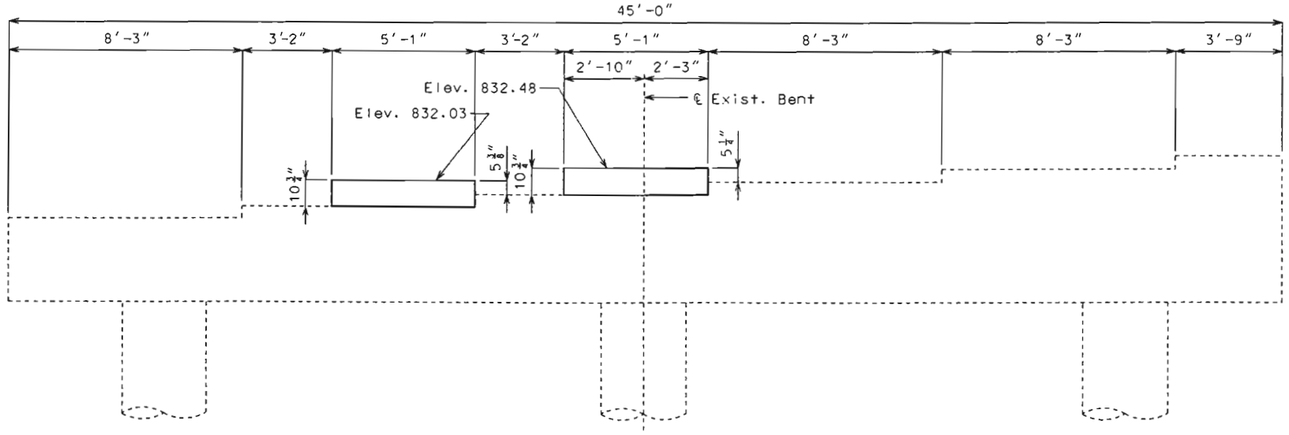


ELEVATION OF EXISTING BENT

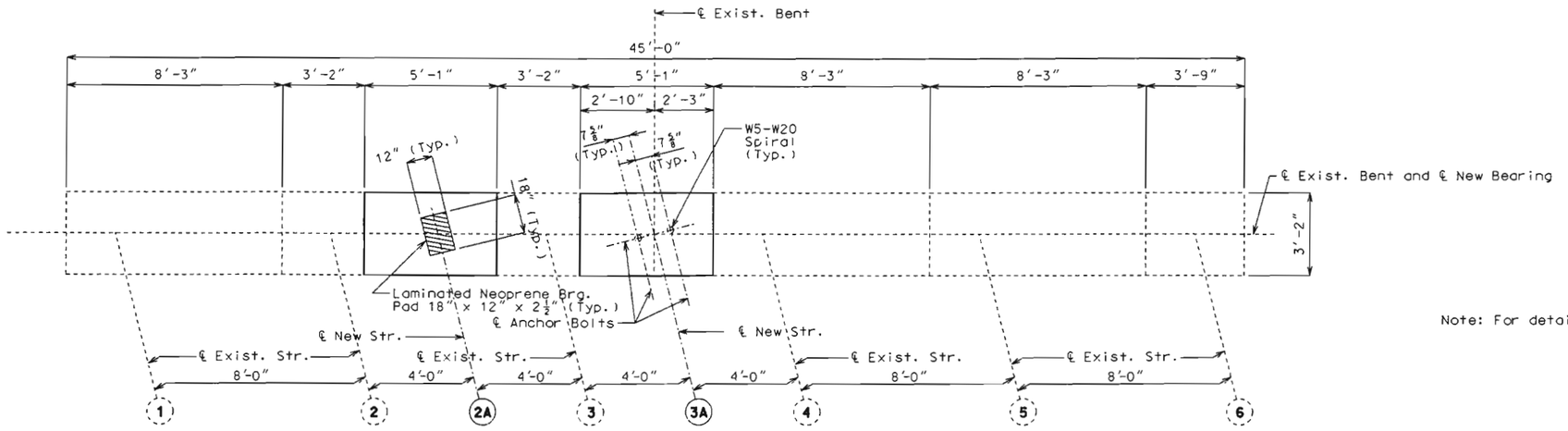


PLAN OF EXISTING BENT

Note: The contractor shall use one of the resin anchor systems listed in the job special provisions. These anchor systems shall be installed according to the manufacturer's specifications, except as modified by the job special provisions.

Contractor shall verify all dimensions in field before ordering new material.

Cost of furnishing and installing the anchor system complete in place shall be included in the price bid for Special Work (Bridge) per lump sum.

The ¾" diameter resin anchor systems shall have a minimum ultimate pullout strength of 20400 lbs. in concrete with f'c = 4,000 psi, see Special Provisions.

An epoxy coated #6 Grade 60 reinforcing bar 2'-7" long shall be substituted for the ¾" threaded rod stud.

*** ¾" Ø bar shall have a 2'-7" Projection into new concrete (bend bars in field).

Outline of old work is indicated by dashed lines. Heavy lines indicate new work.

For bearing pad details, see sheet no. 14.

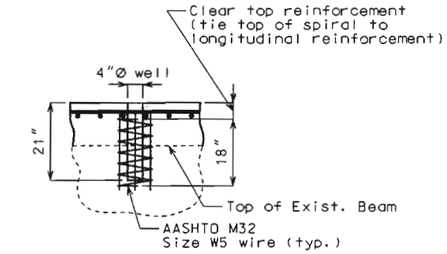


DETAIL OF ANCHOR BOLT WELLS

Note: For details of Swedge Anchor Bolts, see sheet no. 14.

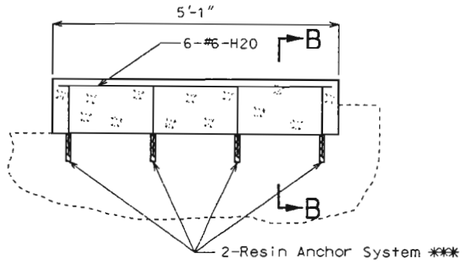


SECTION A-A

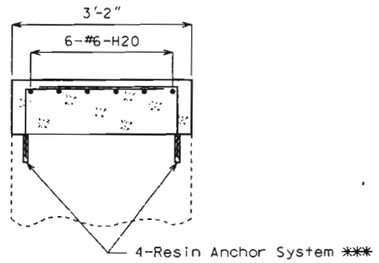


SECTION B-B

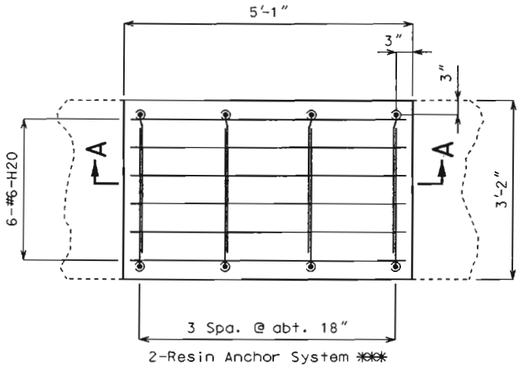


PLAN OF BEAM STEP

DETAILS SHOWING RESIN ANCHOR LOCATION

# DETAILS OF INTERMEDIATE BENT NO. 2

Note: This drawing is not to scale. Follow dimensions.

Detailed JULY 2002
Checked JULY 2002

Sheet No. 9 of 31

JACKSON COUNTY A09953

REV.

T:\br-proj\houchg\j410712\A09953\a09953_009N.dgn 11:12:06 AM 08/22/2002

STATE OF MISSOURI GREGORY E. SANDERS NUMBER E-2000162167 REGISTERED PROFESSIONAL ENGINEER

DATE 8-22-02

| State | Proj. No. | Sheet No. |
|---|---|---|
| MO | | B150 |

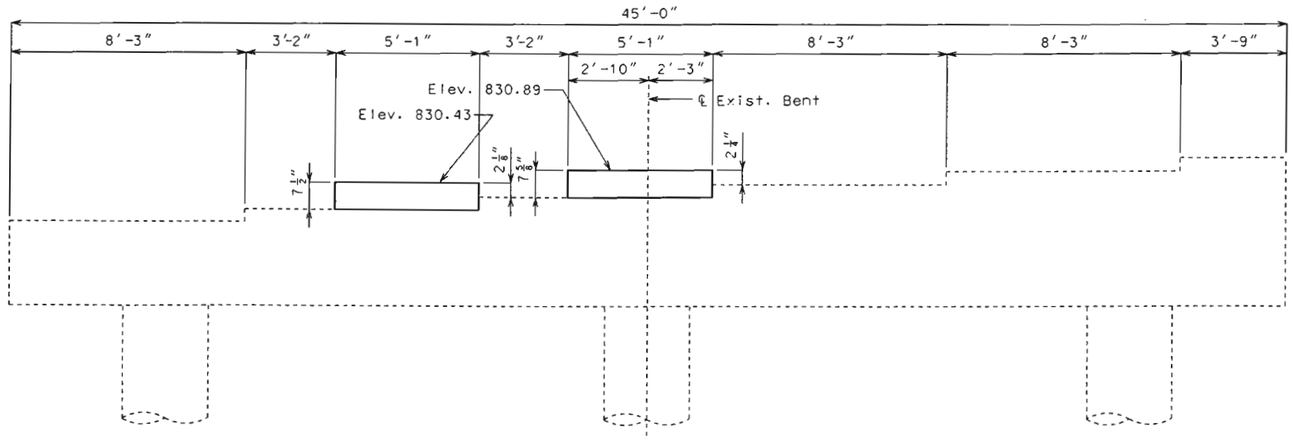


ELEVATION OF EXISTING BENT

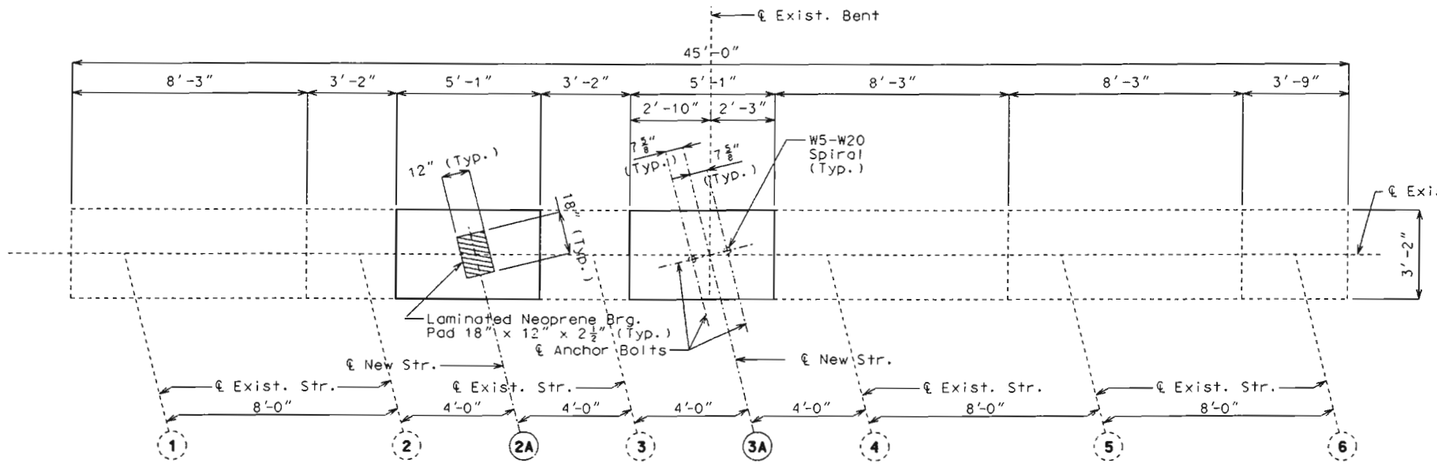


PLAN OF EXISTING BENT

Note: The contractor shall use one of the resin anchor systems listed in the job special provisions. These anchor systems shall be installed according to the manufacturer's specifications, except as modified by the job special provisions.

Contractor shall verify all dimensions in field before ordering new material.

Cost of furnishing and installing the anchor system complete in place shall be included in the price bid for Special Work (Bridge) per lump sum.

The ¾" diameter resin anchor systems shall have a minimum ultimate pullout strength of 20400 lbs. in concrete with f'c = 4,000 psi. see Special Provisions.

An epoxy coated #6 Grade 60 reinforcing bar 2'-7" long shall be substituted for the ¾" threaded rod stud.

*** ¾" Ø bar shall have a 2'-7" Projection into new concrete (bend bars in field).

Outline of old work is indicated by dashed lines. Heavy lines indicate new work.

For bearing pad detail, see sheet No. 14.

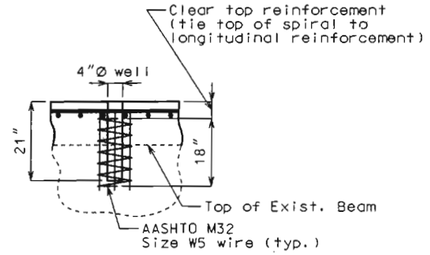


DETAIL OF ANCHOR BOLT WELLS

Note: For details of Swedge Anchor Bolts, see sheet no. 14.

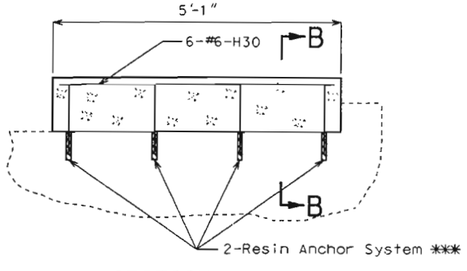


SECTION A-A

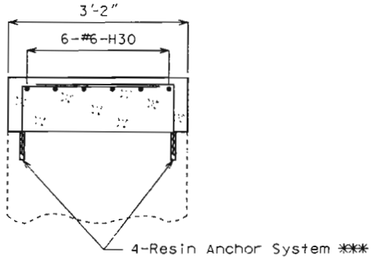


SECTION B-B

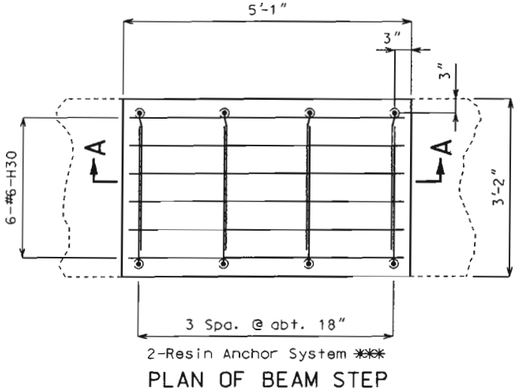


PLAN OF BEAM STEP

DETAILS SHOWING RESIN ANCHOR LOCATION

# DETAILS OF INTERMEDIATE BENT NO. 3

Detailed JULY 2002
Checked JULY 2002

Note: This drawing is not to scale. Follow dimensions.



JACKSON COUNTY A09953

REV.

T:\br-proj\houshg\j4i0712\A09953\a09953_010N.dgn 11:12:08 AM 08/22/2002

Note: For Elevation C-C & D-D. see sheet No. 13.

| State | Proj. No. | Sheet No. |
|---|---|---|
| MO | | B151 |

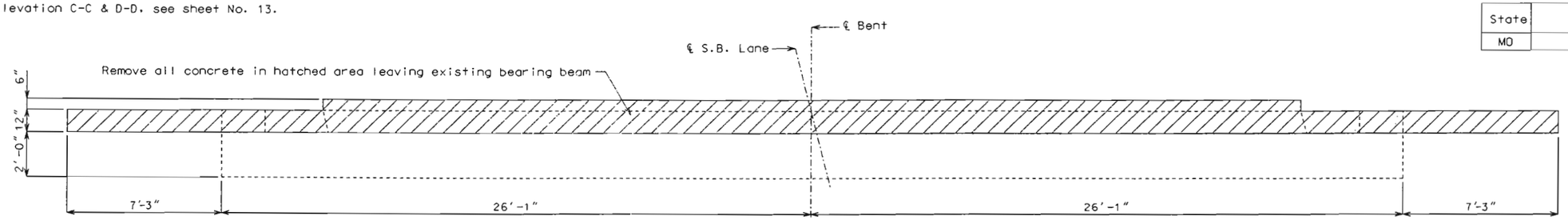


PLAN OF EXISTING BENT SHOWING LIMITS OF CONCRETE REMOVAL

Note: Bend F bars in field to clear stringers.
For reinforcement of safety barrier curb. see sheet No. 25 & 26.
Concrete diaphragms shall be poured prior to the slab, allowing sufficient time for the set of the concrete in the diaphragms.
For section near end bent. see sheet No. 12.
For detail of bearing pad details. see sheet no. 12.

Note: The contractor shall use a mechanical bar splice for H42, H43, H45, H46, H48 & H49 bars at the specified location. The total bar lengths for H42, H43, H45, H46, H48 & H49 bars shown in the Bill of Reinforcing Steel are determined based on the end of the bars being located flush to the face of the construction joint. Extra bar lengths from that specified in the bar list may be required depending on the specific splice system to be used. No payment will be made for additional bar lengths added. See job special provisions for additional requirements of mechanical bar splices. Mechanical bar splices for epoxy coated bars shall be epoxy coated.

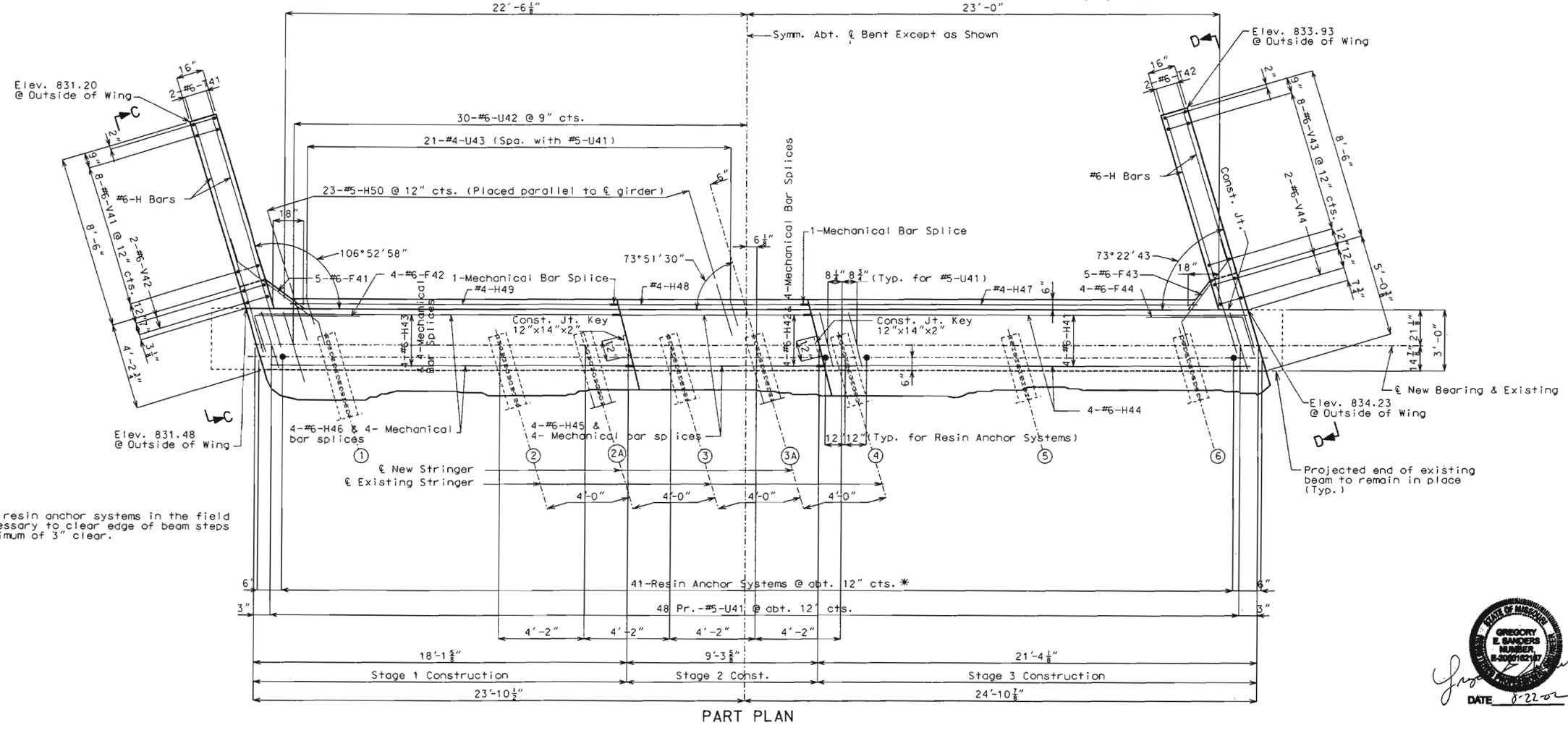


PART PLAN

* Adjust resin anchor systems in the field when necessary to clear edge of beam steps by a minimum of 3" clear.

STATE OF MISSOURI GREGORY E. SANDERS NUMBER E-2006018117
DATE 8-22-02

# DETAILS OF END BENT NO. 4

Detailed Jun. 2002
Checked July 2002

Note: This drawing is not to scale. Follow dimensions.



JACKSON COUNTY A09953 REV.

T:\br-proj\housing\j4b0712\a09953\a09953_01IN.dgn 11:21:11 AM 08/22/2002

| State | Proj. No. | Sheet No. |
|---|---|---|
| MO | | B152 |

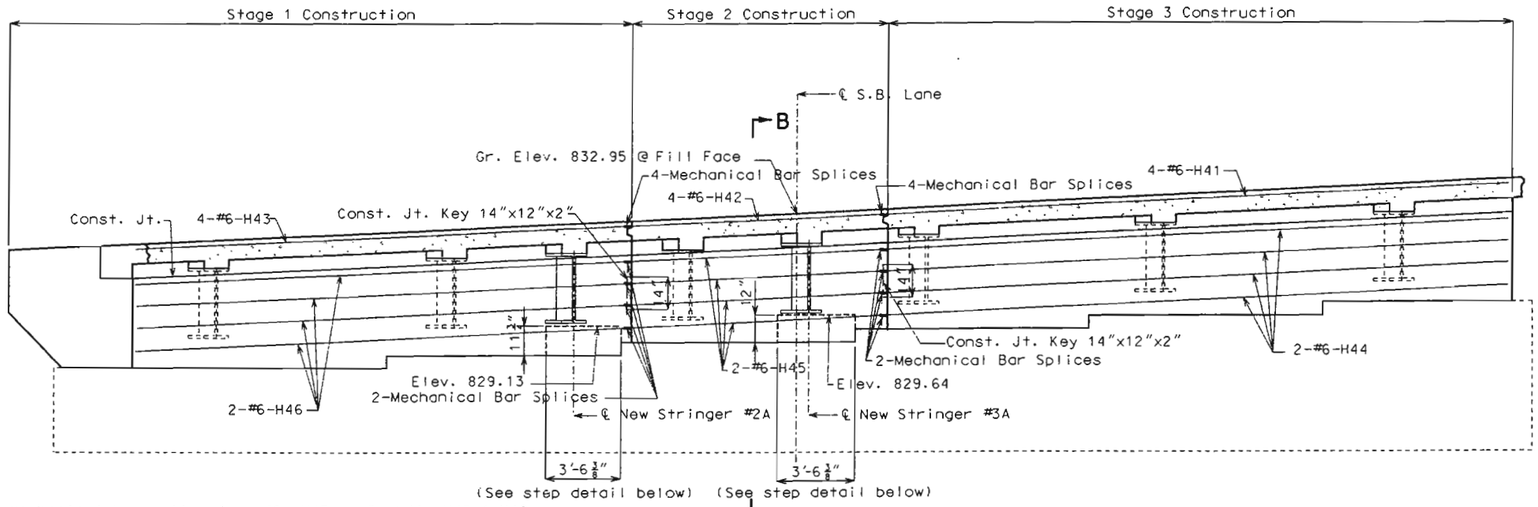


SECTION NEAR END BENT

Note: The contractor shall use a mechanical bar splice for H42, H43, H45, H46, H48 & H49 bars at the specified location. The total bar lengths for H42, H43, H45, H46, H48 & H49 bars shown in the Bill of Reinforcing Steel are determined based on the end of the bars being located flush to the face of the construction joint. Extra bar lengths from that specified in the bar list may be required depending on the specific splice system to be used. No payment will be made for additional bar lengths added. See job special provisions for additional requirements of mechanical bar splices. Mechanical bar splices for epoxy coated bars shall be epoxy coated.

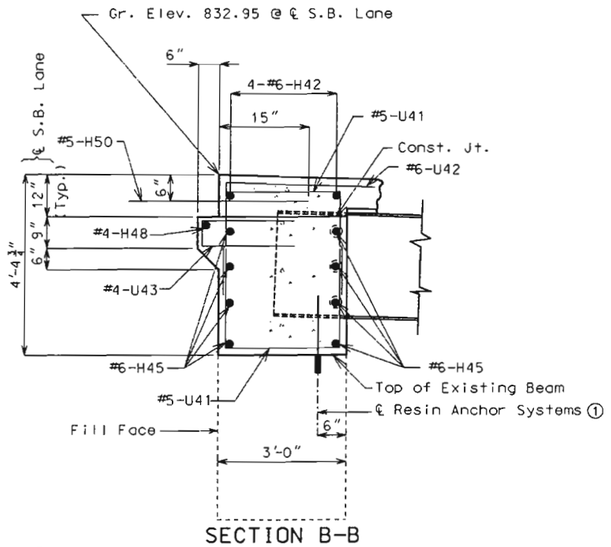


SECTION B-B

①Note: 3/4"Ø bars shall have a 20" Projection into new concrete.

Cost of furnishing and installing resin anchor systems in existing bearing beam shall be included in the contract price bid for Special Work (Bridges) per lump sum.

These anchor systems shall be installed according to the manufacturer's specifications except as modified by the Job Special Provisions and that a #6 grade 60 reinforcing bar 18", except as noted, long shall be subsituted for the 3/4" threaded rod stud.

The 3/4" diameter resin anchor systems shall have a minimum ultimate pullout strength of 20,400 lbs. in concrete with f'c=4000 psi. See Special Provisions.

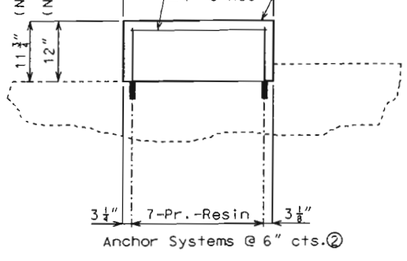


PART ELEVATION A-A

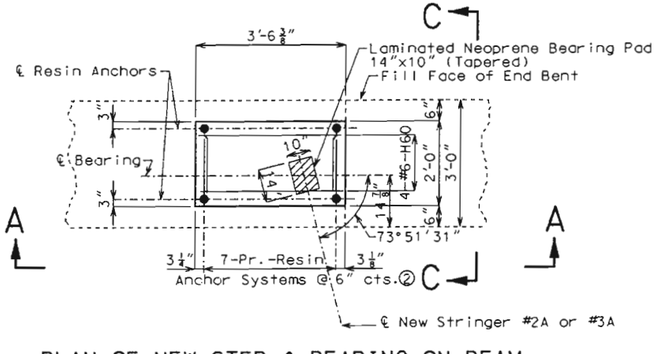


PLAN OF NEW STEP & BEARING ON BEAM FOR STRINGER #2A & #3A

②Use 3/4" diameter resin anchor systems

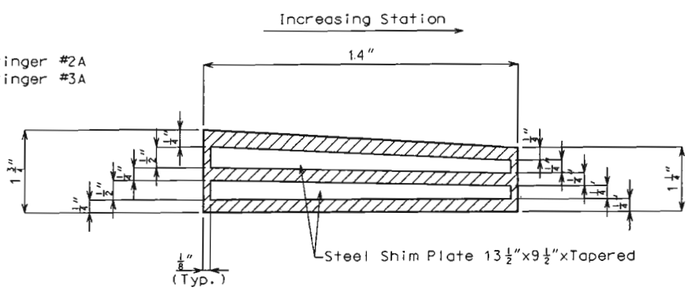


TYPICAL SECTION THRU LAMINATED NEOPRENE BEARING PAD (TAPERED)

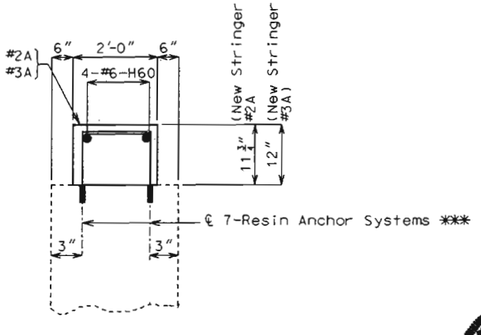


PART SECTION C-C

*** 3/4"Ø bar shall have a 2'-7" projection into new concrete (bend in field)

STATE OF MISSOURI
GREGORY E. SANDERS
NUMBER E-2006162167
DATE 8-22-02

PLAN OF NEW STEP & BEARING ON BEAM FOR STRINGER #2A & #3A

# DETAILS OF END BENT NO. 4

Detailed July 2002
Checked July 2002

Note: This drawing is not to scale. Follow dimensions.

Sheet No. 12 of 31

JACKSON COUNTY A09953

REV.

T:\Br_proj\houchg\j410-12\A09953\a09953_012N.dgn 11:12:14 AM 08/22/2002

Note: For location of Elevation C-C & D-D, see sheet No. 11.
For R bar reinforcing in wing, see sheet No. 25 & 26.

| State | Proj. No. | Sheet No. |
|---|---|---|
| MO | | B153 |

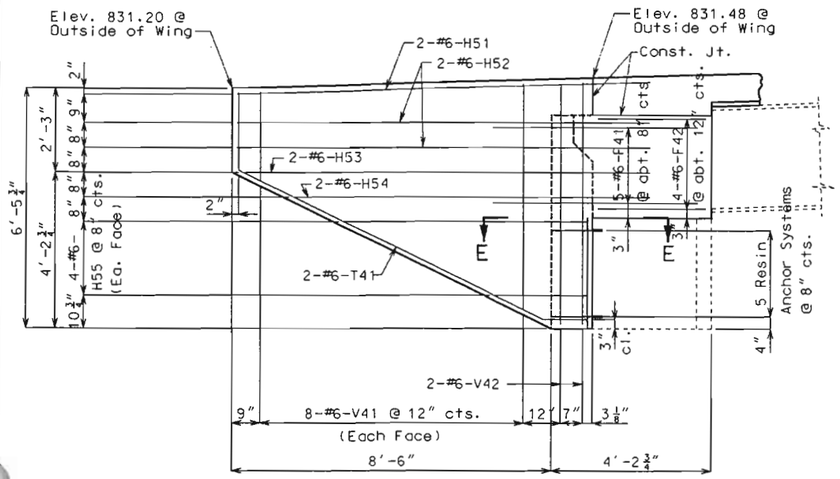


ELEVATION C-C

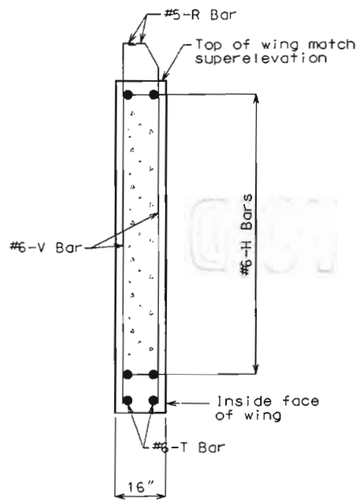


TYPICAL SECTION THRU WING

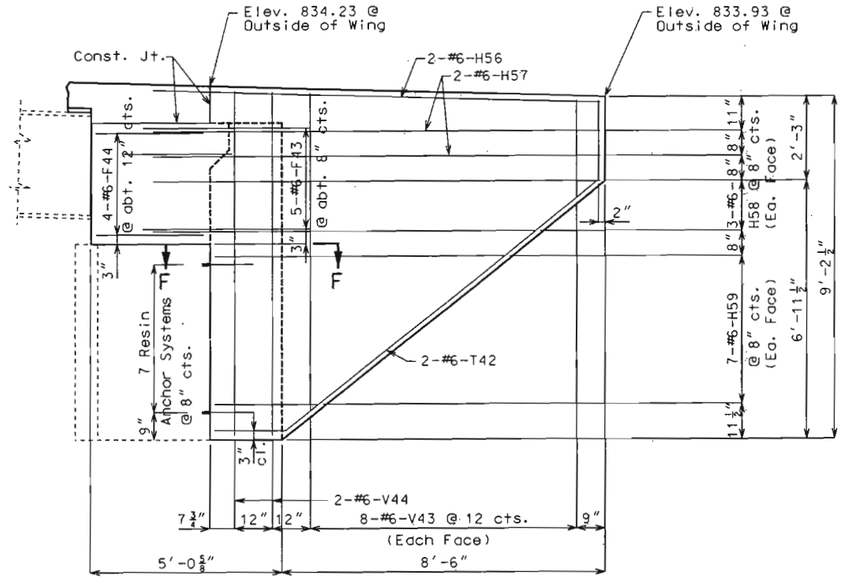


ELEVATION D-D

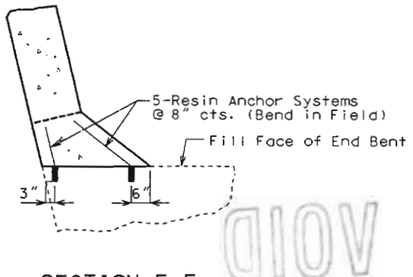


SECTION E-E
(Detail showing resin anchor for wing brace)

Note: ¾"Ø bars shall have a 20" Projection into new concrete (bend bars in field or drill holes at angle).
Cost of furnishing and installing resin anchor systems in existing bearing beam shall be included in the contract price bid for Special Work (Bridges) per lump sum.
These anchor systems shall be installed according to the manufacturer's specifications except as modified by the Job Special Provisions and that a #6 grade 60 reinforcing bar 18". except as noted. long shall be subsituted for the ¾" threaded rod stud.
The ¾" diameter resin anchor systems shall have a minimum ultimate pullout strength of 20.400 lbs. in concrete with f'c=4000 psi. See Special Provisions.

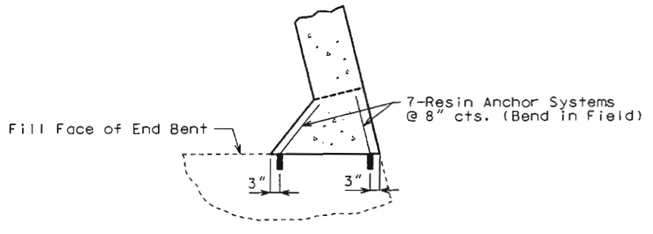


SECTION F-F
(Detail showing resin anchor for wing brace)

STATE OF MISSOURI
GREGORY E. SANDERS
NUMBER E-2000026157
DATE 8-22-02

# DETAILS OF END BENT NO. 4

Detailed Jun. 2002
Checked July 2002

Note: This drawing is not to scale. Follow dimensions.



JACKSON COUNTY A09953

REV.

T:\br-proj\houchg\j4b071z\A09953\a09953_013.dgn 11:12:17 AM 08/22/2002

| State | Proj. No. | Sheet No. |
|---|---|---|
| MO | | B154 |

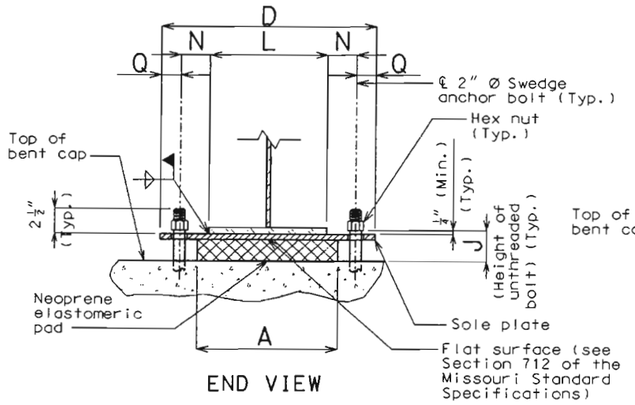


END VIEW

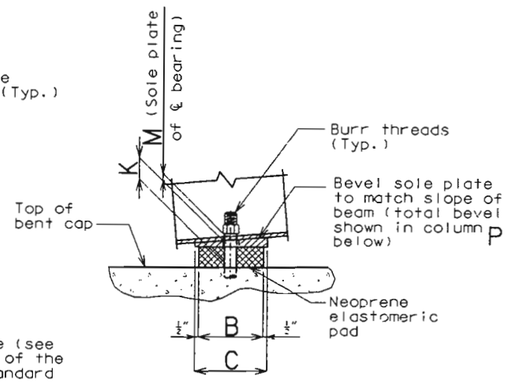


SIDE VIEW

VOID

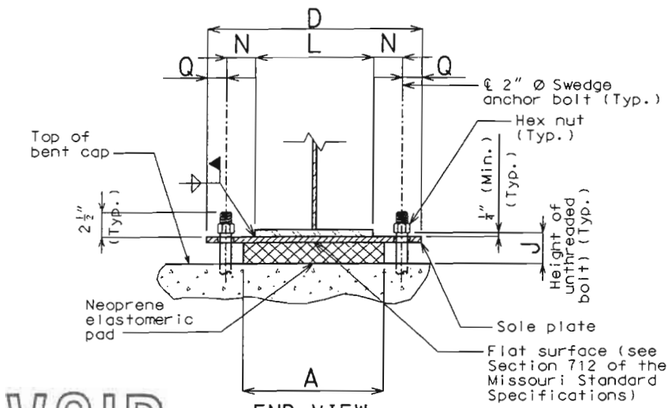


END VIEW

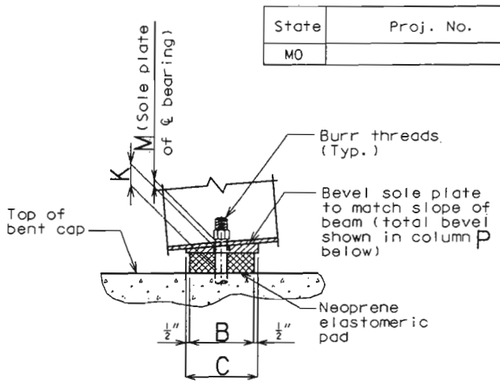


SIDE VIEW

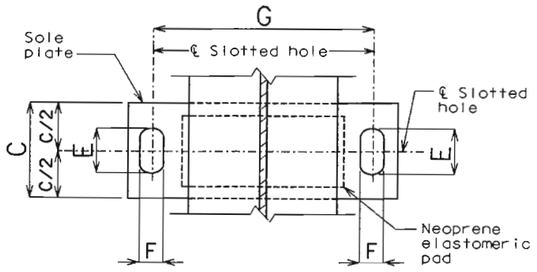


PART PLAN

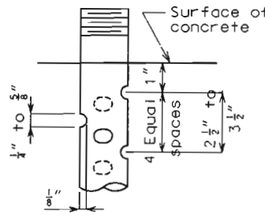


DETAIL OF 3/4" Ø THRU
2-1/2" Ø ANCHOR BOLTS

SWEDGE ANCHOR BOLT DETAILS

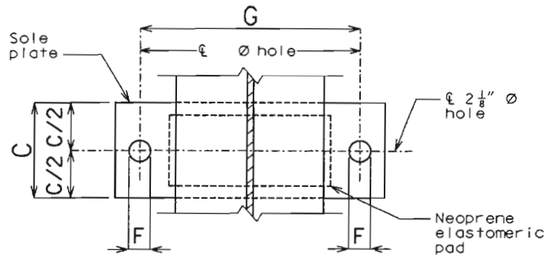


PART PLAN

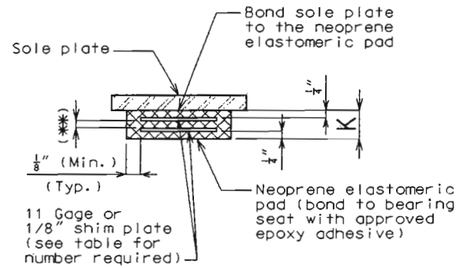


(**) Layers of 1/2" elastomer alternating with 11 gage or 1/8" shim plate

NEOPRENE ELASTOMERIC PAD

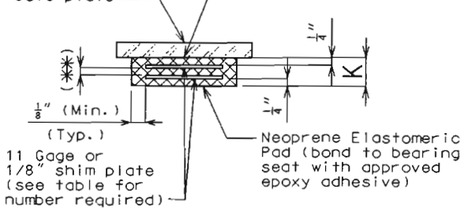


(**) Layers of 1/2" elastomer alternating with 11 gage or 1/8" shim plate

NEOPRENE ELASTOMERIC PAD

## GENERAL NOTES:

Anchor bolts shall be 2" Ø ASTM A709 Grade 50W steel swedged bolts and shall extend 18" into the concrete with ASTM A194 - 2, 2H or ASTM A563 - C, C3, D, DH, DH3 heavy hexagon nuts. Actual manufacturer's certified mill test reports (chemical and mechanical) shall be provided. Swedging shall be 1" less than extension into the concrete.

All structural steel for the anchor bolts and heavy hexagon nuts shall be coated with a minimum of two coats of inorganic zinc primer (5 mils minimum).

Neoprene Elastomeric Pads shall be 60 Durometer. The neoprene pad shall be bonded to the bearing seat with an epoxy adhesive as approved by the bearing manufacturer for bonding neoprene to concrete.

The sole plate shall be furnished with the bearing and field welded to the girders.

Structural steel for sole plate shall be ASTM A709 Grade 50 and shall be coated with a minimum of two coats of inorganic zinc primer (5 mils minimum).

The accepted quantity of elastomeric bearing assemblies, complete-in-place, will be paid for at the contract unit price for Laminated Neoprene Bearing Pads (Steel Structures), each.

Payment for the sole plate, anchor bolts and heavy hexagon nuts shall be included in the cost of the bearing assembly. See Special Provisions.

For details of anchor bolt wells, see sheet no. 9.

**FIXED BEARINGS**

| BENT NO. | A | B | C | D | F | G | J | K | L | M | N | P | Q | NUMBER OF SHIM PLATES(*) | NUMBER REQUIRED |
|---|---|---|---|---|---|---|---|---|---|---|---|---|---|---|---|
| 3 | 12" | 18" | 19" | 21¼" | 2⅛" | 15¼" | 3" | 1¼" | 10½" | 1½" | 2⅜" | 1½" | 3" | 2 | 2 |
| | | | | | | | | | | | | | | | |
| | | | | | | | | | | | | | | | |
| | | | | | | | | | | | | | | | |
| | | | | | | | | | | | | | | TOTAL BEARINGS | 2 |

(*) The required shim plate shall be placed between layers of elastomer and molded together to form an integral unit.

**EXPANSION BEARINGS**

| BENT NO. | A | B | C | D | E | F | G | J | K | L | M | N | P | Q | NUMBER OF SHIM PLATES(*) | NUMBER REQUIRED |
|---|---|---|---|---|---|---|---|---|---|---|---|---|---|---|---|---|
| 2 | 12" | 18" | 19" | 21¼" | 4¼" | 2⅛" | 15¼" | 4¼" | 2½" | 10½" | 1½" | 2⅜" | 1½" | 3" | 4" | 2 |
| | | | | | | | | | | | | | | | | |
| | | | | | | | | | | | | | | | | |
| | | | | | | | | | | | | | | | | |
| | | | | | | | | | | | | | | | TOTAL BEARINGS | 2 |

(*) The required shim plate shall be placed between layers of elastomer and molded together to form an integral unit.

VOID

GREGORY E. SANDERS NUMBER E-2000162187 STATE OF MISSOURI

DATE 8-22-02

# DETAILS OF LAMINATED NEOPRENE BEARINGS

Detailed JULY 2002
Checked JULY 2002

Note: This drawing is not to scale. Follow dimensions.



JACKSON COUNTY A09953

T:\br-proj\houchg\j4r2712\A09953\a09953_014.dgn 11:12:20 AM 08/22/2002

| State | Proj. No. | Sheet No. |
|---|---|---|
| MO | | |

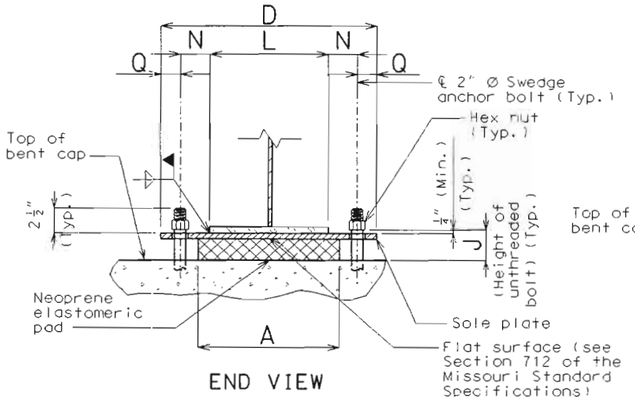


END VIEW

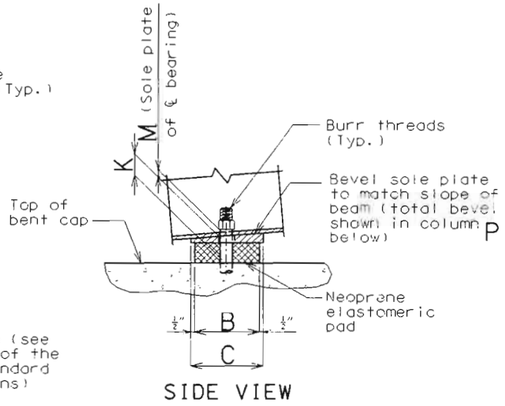


SIDE VIEW

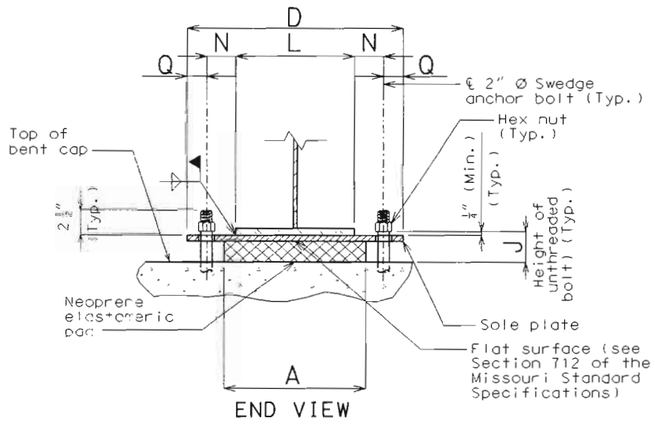


END VIEW

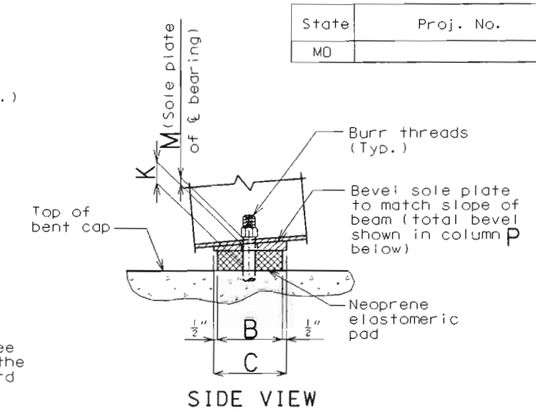


SIDE VIEW

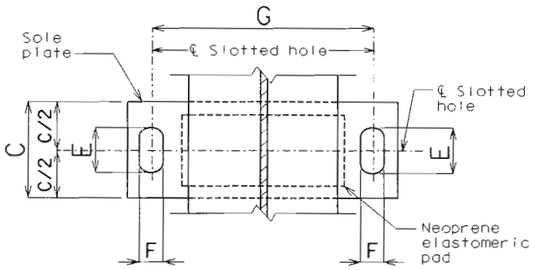


PART PLAN

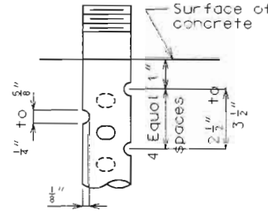


DETAIL OF 3/4" Ø THRU 2-1/2" Ø ANCHOR BOLTS

SWEDGE ANCHOR BOLT DETAILS

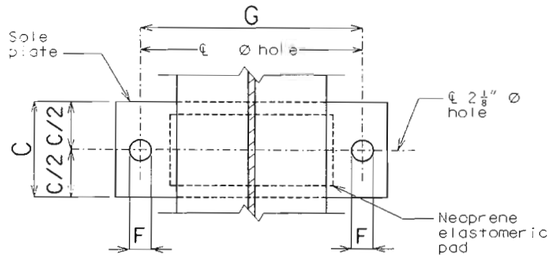


PART PLAN

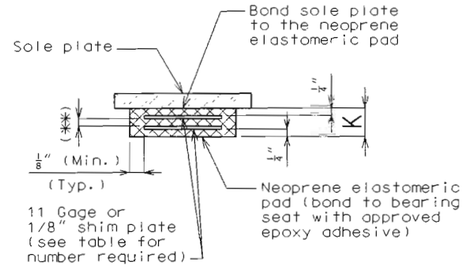


(**) Layers of 1/2" elastomer alternating with 11 gage or 1/8" shim plate

NEOPRENE ELASTOMERIC PAD

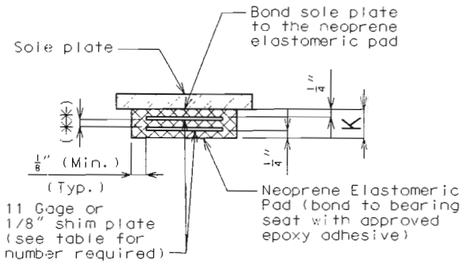


(**) Layers of 1/2" elastomer alternating with 11 gage or 1/8" shim plate

NEOPRENE ELASTOMERIC PAD

## GENERAL NOTES:

Anchor bolts shall be 2" Ø ASTM A709 Grade 50W steel swedged bolts and shall extend 18" into the concrete with ASTM A194 - 2, 2H or ASTM A563 - C, C3, D, DH, DH3 heavy hexagon nuts. Actual manufacturer's certified mill test reports (chemical and mechanical) shall be provided. Swedging shall be 1" less than extension into the concrete.

All structural steel for the anchor bolts and heavy hexagon nuts shall be coated with a minimum of two coats of inorganic zinc primer (5 mils minimum).

Neoprene Elastomeric Pads shall be 60 Durometer. The neoprene pad shall be bonded to the bearing seat with an epoxy adhesive as approved by the bearing manufacturer for bonding neoprene to concrete.

The sole plate shall be furnished with the bearing and field welded to the girders.

Structural steel for sole plate shall be ASTM A709 Grade 50 and shall be coated with a minimum of two coats of inorganic zinc primer (5 mils minimum).

The accepted quantity of elastomeric bearing assemblies, complete-in-place, will be paid for at the contract unit price for Laminated Neoprene Bearing Pads (Steel Structures), each.

Payment for the sole plate, anchor bolts and heavy hexagon nuts shall be included in the cost of the bearing assembly. See Special Provisions.

For details of anchor bolt walls, see sheet no. 9.

### EXPANSION BEARINGS

| BENT NO. | A | B | C | D | E | F | G | J | K | L | M | N | P | Q | NUMBER OF SHIM PLATES(*) | NUMBER REQUIRED |
|---|---|---|---|---|---|---|---|---|---|---|---|---|---|---|---|---|
| 2 | 12" | 18" | 19" | 21¼" | 4¼" | 2⅛" | 15¼" | 4⅛" | 2½" | 10½" | 1½" | 2⅜" | 1½" | 3" | 4" | 2 |
| | | | | | | | | | | | | | | | △ ½" | |
| | | | | | | | | | | | | | | | | |
| | | | | | | | | | | | | | | | | |
| | | | | | | | | | | | | | | | TOTAL BEARINGS | 2 |

(*) The required shim plate shall be placed between layers of elastomer and molded together to form an integral unit.

### FIXED BEARINGS

| BENT NO. | A | B | C | D | F | G | J | K | L | M | N | P | Q | NUMBER OF SHIM PLATES(*) | NUMBER REQUIRED |
|---|---|---|---|---|---|---|---|---|---|---|---|---|---|---|---|
| 3 | 12" | 18" | 19" | 21¼" | 2⅛" | 15¼" | 3" | 1¼" | 10½" | 1½" | 2⅜" | 1½" | 3" | 2 | 2 |
| | | | | | | | | | | | | | | △ ½" | |
| | | | | | | | | | | | | | | | |
| | | | | | | | | | | | | | | | |
| | | | | | | | | | | | | | | TOTAL BEARINGS | 2 |

(*) The required shim plate shall be placed between layers of elastomer and molded together to form an integral unit.

GREGORY E. SANDERS NUMBER E-2000162197

DATE 4/8/03

# DETAILS OF LAMINATED NEOPRENE BEARINGS

Detailed JULY 2002
Checked JULY 2002

Note: This drawing is not to scale. Follow dimensions. △Revised 4/8/2003 Sheet No. 14 of 31

JACKSON COUNTY A09953

| State | Proj. No. | Sheet No. |
|---|---|---|
| MO | | B155 |

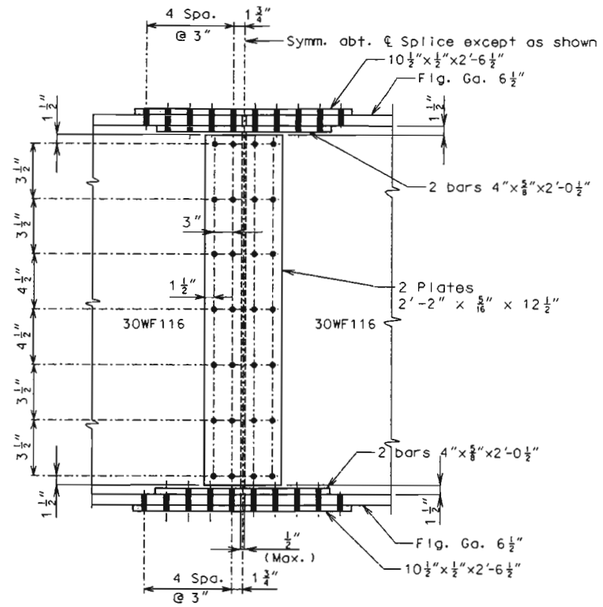


DETAIL OF BOLTED FIELD SPLICE

Note:
Use 7/8" Ø high strength bolts with 15/16" Ø holes.
Contact surfaces are to be blast cleaned in accordance with Section 712.12.2.1 of the Missouri Standard Specifications

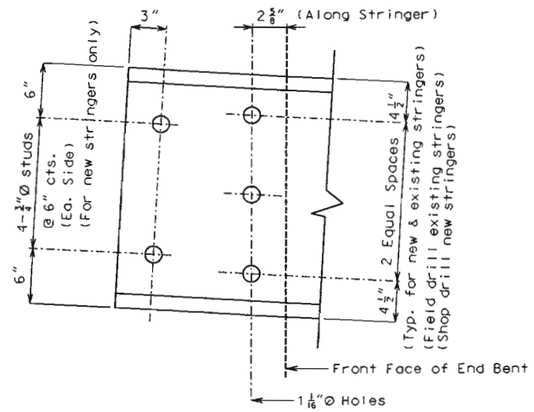


SECTION AT END OF STRINGER
(End Bent #1 Shown, Bent #4 Similar)

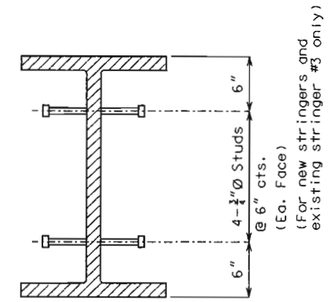


SECTION A-A

DETAILS OF WEB HOLES AND WELDED STUDS AT END BENTS
(New and Existing Stringers)

Note: Cost of field drilling 1 1/16"Ø holes in all stringers and welding studs to stringer no. 3 shall be included in the contract unit price bid for Special Work (Bridges)

Cost of placing studs on existing stringer no. 3 shall be incidental to other pay items.

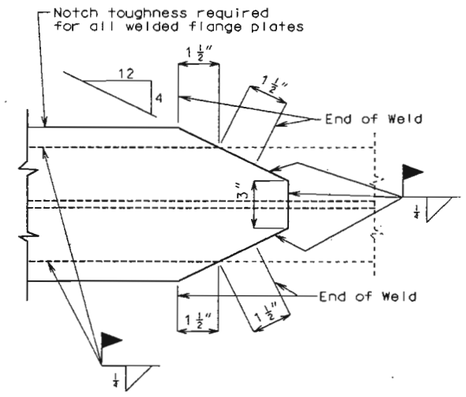


NEW BOTTOM FLANGE PLATE
FIELD WELDING DETAIL

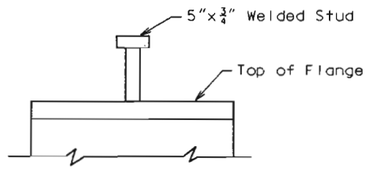


ELEVATION

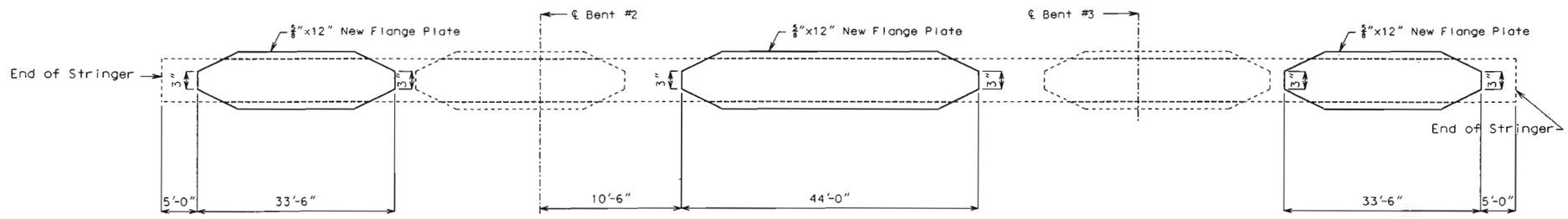


PLAN OF BOTTOM FLANGE SHOWING NEW FLANGE PLATE ATTACHMENTS FOR EXISTING STRINGERS NOS. 1, 5 & 6

Note: The cost for installing the bottom flange cover plates shall be included in the contract unit price for Strengthening Existing Stringers per lump sum

All fabricated structural structural steel shall be ASTM A709 Grade 50.

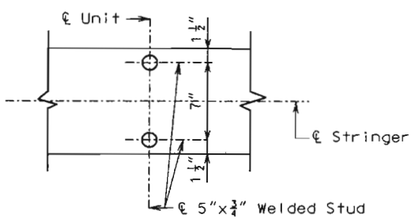


PLAN
(2 STUDS PER UNIT)

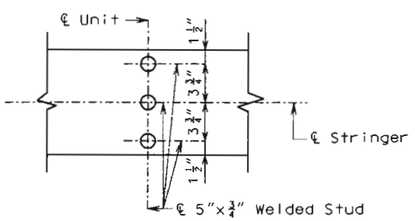


PLAN
(3 STUDS PER UNIT)

DETAILS OF SHEAR CONNECTORS ON NEW STRINGERS

Note: Weight of 571 Lbs. of shear connectors is included in the weight of Fabricated Structural Low Alloy Steel.

Shear connectors shall meet the requirements of Section 1037 of Missouri Standard Specifications.

Existing 3/4"x4" welded studs shall remain in place when the existing concrete deck is removed. The top flange and existing studs shall be cleaned to SSPC-SP-3 requirements.

DATE 8-22-02

Detailed June 2002
Checked July 2002

Note: This drawing is not to scale. Follow dimensions.



JACKSON COUNTY A09953

T:\br-proj\houchg\j410712\A09953\a09953_015.dgn 12:37:52 PM 08/22/2002

| STATE | PROJ. NO. | SHEET NO. |
|---|---|---|
| MO. | | B156 |

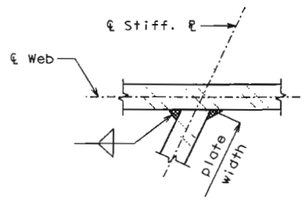


CONN. "B"

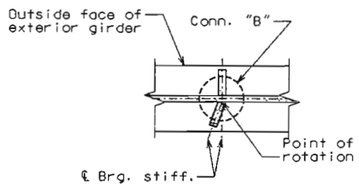


INT. BRG. STIFF.

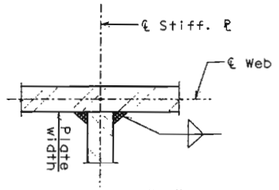


CONN. "A"

WELDING DETAILS

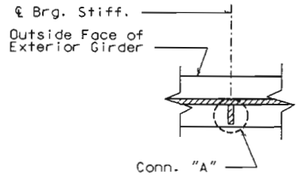


INT. DIAPH. CONN. PLATE

TYPICAL LOCATION DETAILS

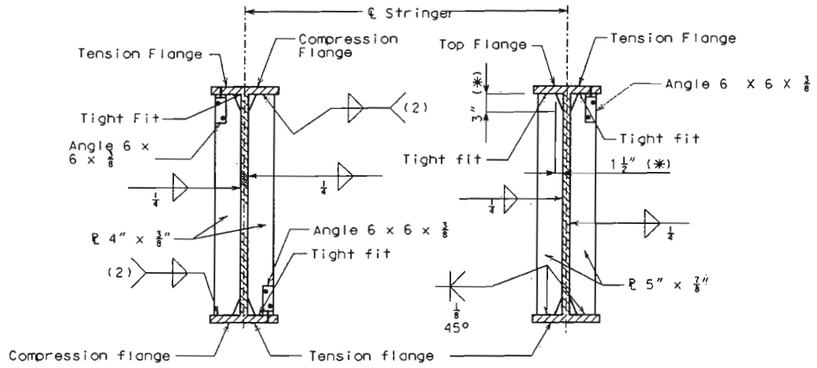


INT. DIAPH. CONN. PLATE

INT. BRG. STIFF.

(2) Weld to compression flange as located on elevation of girder.
(*) Typical for all Int. Diaph. Conn. Pl. and Brg. Stiff.

WELDING DETAILS ON NEW STRINGERS ONLY

NOTE:

At the contractor's option, holes in the diaphragm plate on non slab bearing diaphragms may be made 1/4" larger than the nominal diameter of the bolt.
A hardened washer shall be used under the bolt head and nut when this option is used. Holes in the girder diaphragm connection plate or transverse web stiffener shall be standard size.

All fabricated structural steel shall be ASTM A709 Grade 50.

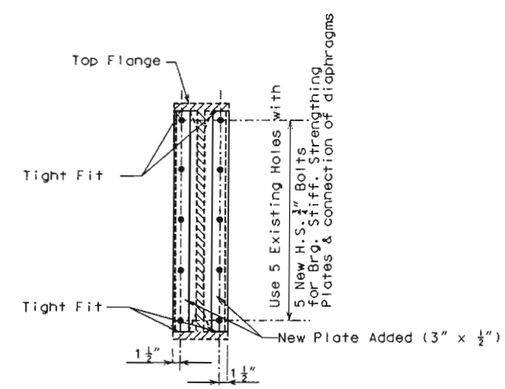


INT. BRG. STIFF. STRENGTHENING
FOR EXISTING STRINGERS NO. 1, 5 & 6 AT BENT NOS. 2 & 3

STATE OF MISSOURI
GREGORY E. SANDERS
NUMBER E-2000162167
REGISTERED PROFESSIONAL ENGINEER

DATE 8-22-02

Detailed Jun. 2002
Checked July 2002



JACKSON COUNTY

A09953

Note: Bolts in intermediate diaphragms and cross frames that connect stringers under different construction stage slab pours shall be removed, replaced and installed snug tight, then tightened after both adjacent slab pours are completed.

| State | Proj. No. | Sheet No. |
|---|---|---|
| MO | | B157 |

Note: Stringers Span (1-2) are parallel to chord from fill face of End Bent No. 1 to ℄ Bearing Bent No. 2.
Stringers Span (3-4) are parallel to chord from fill face of End Bent No. 4 to ℄ Bearing Bent No. 3.
All bents are parallel.

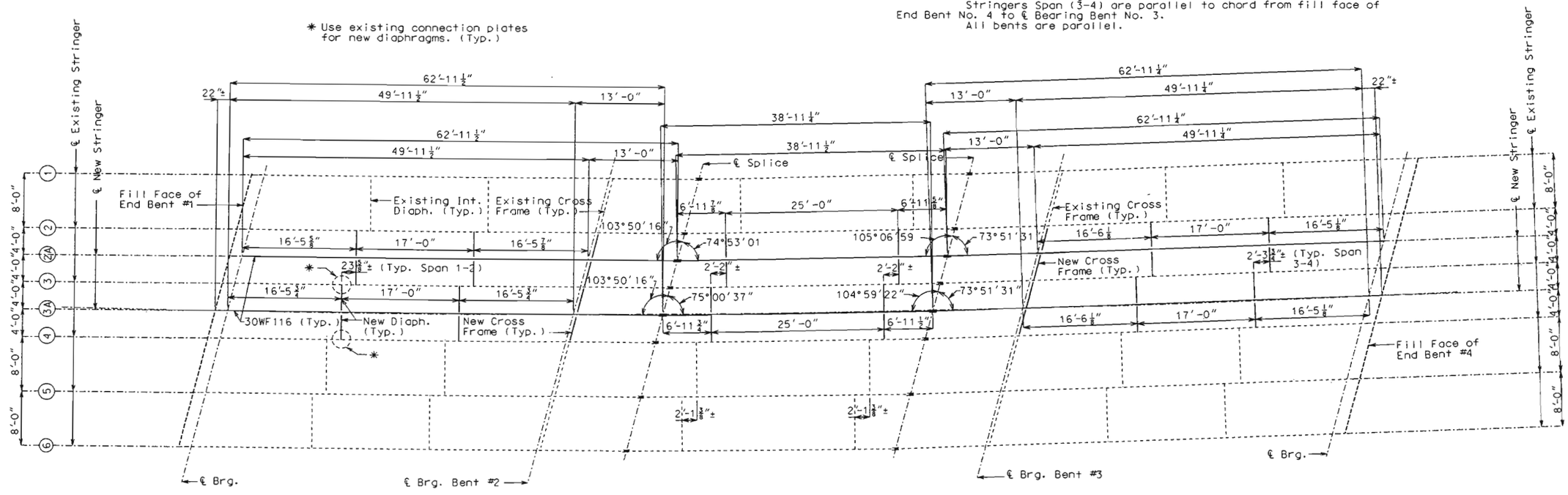


## PLAN OF STRUCTURAL STEEL

Note: Longitudinal dimensions shown are horizontal.
Dimensions perpendicular between stringers except between field splices.
For detail of bolted field splice and shear connectors, see sheet No. 15.
Remove all existing diaphragms between stringers #2 & #3 & between stringers #3 & #4.
U.I.P. end diaphragms between existing stringers #1 and #2, #4 and #5, and #5 and #6. Embed in new concrete. Do not loosen bolts in diaphragms between different construction stages.

Note: All fabricated structural steel shall be ASTM A709 Grade 50.

Note: Portions of the top flange exposed by removal of the concrete deck shall be coated with not less than 3.0 mils of gray epoxy mastic primer (non-aluminum) (See Special Provisions)

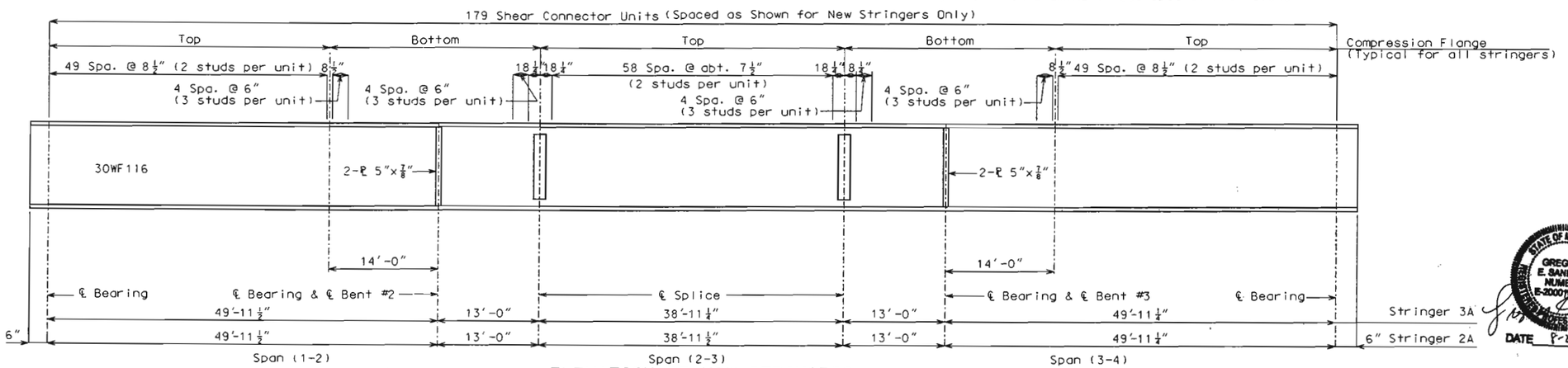


## ELEVATION OF NEW STRINGERS

STATE OF MISSOURI GREGORY E. SANDERS NUMBER E-20001[illegible] REGISTERED PROFESSIONAL ENGINEER
DATE 8-22-02

Detailed May 2002
Checked July 2002

Note: This drawing is not to scale. Follow dimensions.



JACKSON COUNTY A09953

REV.

T:\br-proj\houchg\4\0712\A09953\a09953_017N.dgn 11:12:28 AM 08/22/2002

| State | Proj. No. | Sheet No. |
|---|---|---|
| MO | | B158 |

Note: Bolts in intermediate diaphragms and cross frames that connect stringers under different construction stage slab pours shall be removed, replaced and installed snug tight, then tightened after both adjacent slab pours are completed.

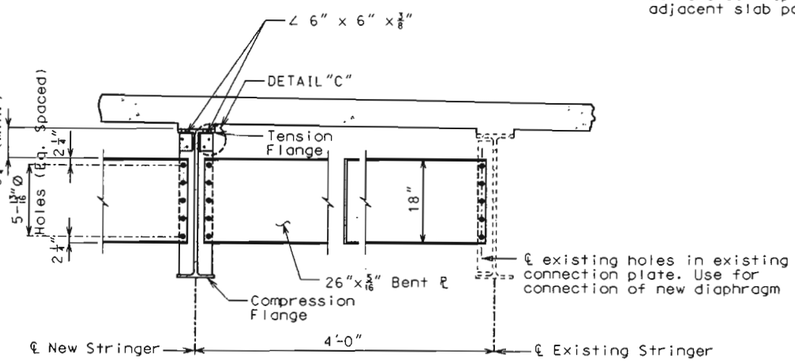


TYPICAL PART SECTION SHOWING
NEW CROSS FRAMES AND
NEW INTERMEDIATE DIAPHRAGMS
TOP FLANGE IN TENSION

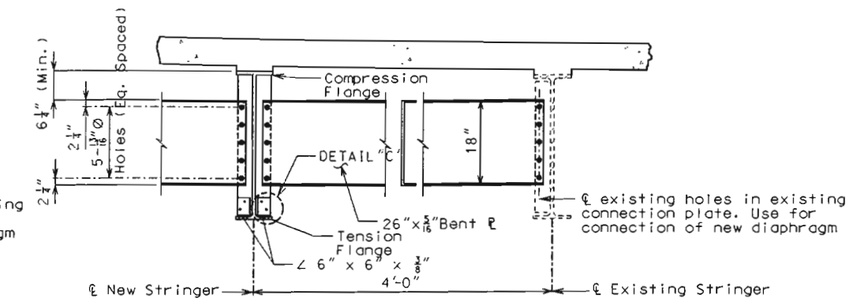


TYPICAL PART SECTION SHOWING
NEW INTERMEDIATE DIAPHRAGMS
BOTTOM FLANGE IN TENSION
(For details of Intermediate diaphragm connection plate, see sheet No. 16.)

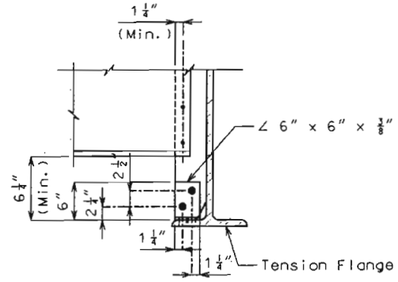


DETAIL "C"

*℄ for 13/16"Ø holes to be drilled in existing stringers for connection of flange connection angles with ¾" high strength bolts

Note: The two¾" Ø H.S. bolts that connect the 6" x 6" x⅜" angle to the top flange shall be placed so the nut is on the inside of flange (toward the web).

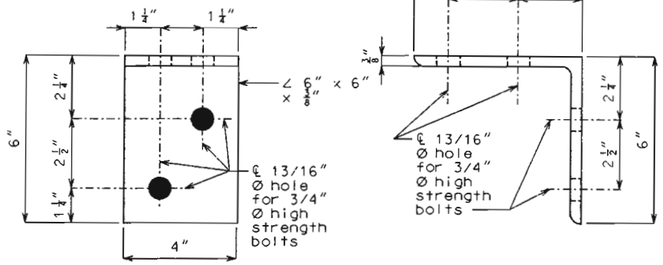


ELEVATION SIDE VIEW

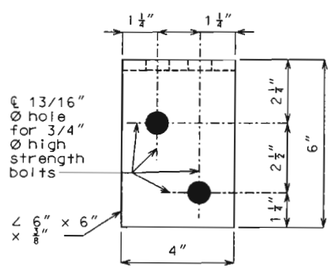


PLAN

DETAIL OF FLANGE CONNECTION ANGLE
FOR NEW STRINGERS ONLY

** Utilize existing holes in connection plate where possible or field drill new 13/16"Ø holes for attaching 8" side of angle to existing connection plate. Maintain minimum edge distance of 1¼" and a minimum spacing of 3" centers. Two ¾"Ø H.S. Bolts required in 8" leg of angle.

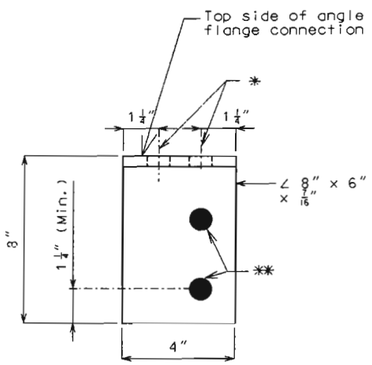


ELEVATION

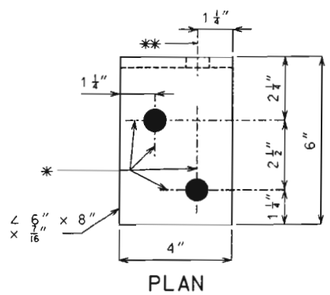


PLAN

DETAIL OF FLANGE CONNECTION ANGLE
FOR EXISTING STRINGERS ONLY

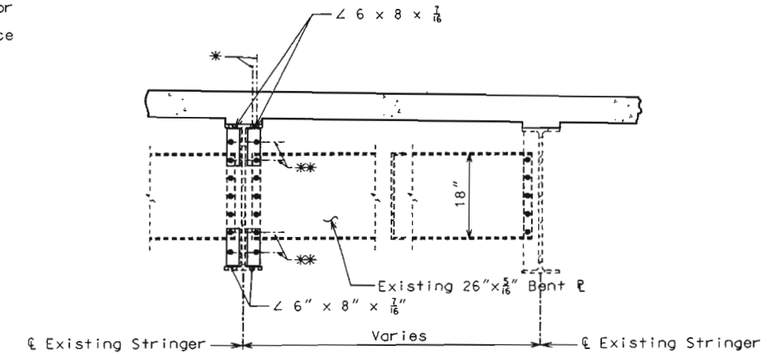


TYPICAL PART SECTION SHOWING
EXISTING CROSS FRAMES AND
EXISTING INTERMEDIATE DIAPHRAGMS

STATE OF MISSOURI
GREGORY E. SANDERS
NUMBER E-2000162167
DATE 8-22-02

| State | Proj. No. | Sheet No. |
|---|---|---|
| MO | | B159 |

| | | | | | | | | | | | | | |
|---|---|---|---|---|---|---|---|---|---|---|---|---|---|
| Stringer No. 1 | 15/16" | 1 3/8" | 1 1/2" | 1 3/8" | 1 1/4" | 1 7/16" | 1 3/8" | 1 3/8" | 1 5/16" | 1 3/16" | 1 3/16" | 1 1/2" |
| Stringer No. 2 | 15/16" | 1 3/8" | 1 9/16" | 1 7/16" | 1 5/16" | 1 9/16" | 1 5/8" | 1 3/16" | 1/2" | 1 3/16" | 1 1/16" | 1 1/16" | 1 3/16" |
| Stringer No. 2A | 1" | 1 1/4" | 1 5/16" | 1 3/16" | 1" | 1 3/8" | 1 9/16" | 1 3/8" | 1" | 1 3/8" | 1 5/16" | 1 1/4" | 1" |
| Stringer No. 3 | 13/16" | 1 5/16" | 1 1/2" | 1 7/16" | 1 5/16" | 1 9/16" | 1 11/16" | 1 1/4" | 5/8" | 1 5/16" | 1 1/4" | 1 1/4" | 1" |
| Stringer No. 3A | 1" | 1 1/4" | 1 5/16" | 1 3/16" | 1" | 1 3/8" | 1 9/16" | 1 3/8" | 1" | 1 3/16" | 1 5/16" | 1 1/4" | 1" |
| Stringer No. 4 | 11/16" | 1 1/8" | 1 5/16" | 1 5/16" | 1 5/16" | 1 1/2" | 1 9/16" | 1 1/4" | 13/16" | 1 1/16" | 1 5/16" | 1 3/8" | 1 3/16" |
| Stringer No. 5 | 3/16" | 1 1/16" | 1 5/16" | 1 5/16" | 1 3/16" | 1 1/2" | 1 11/16" | 1 5/16" | 13/16" | 1 3/16" | 1 1/2" | 1 5/16" | 1 3/8" |
| Stringer No. 6 | 7/16" | 15/16" | 1 3/16" | 1 3/16" | 1 1/8" | 1 1/2" | 1 11/16" | 1 3/8" | 7/8" | 1 1/4" | 1 5/8" | 1 1/16" | 1 1/2" |

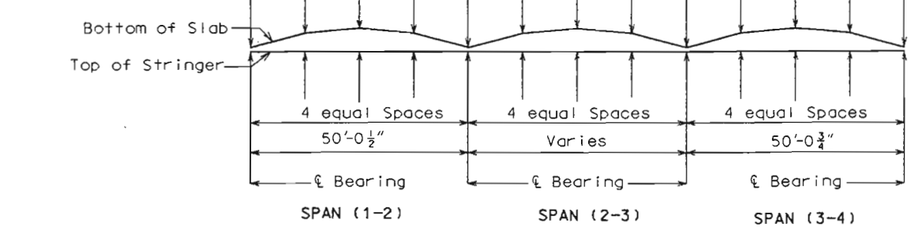


THEORETICAL SLAB HAUNCHING DIAGRAM

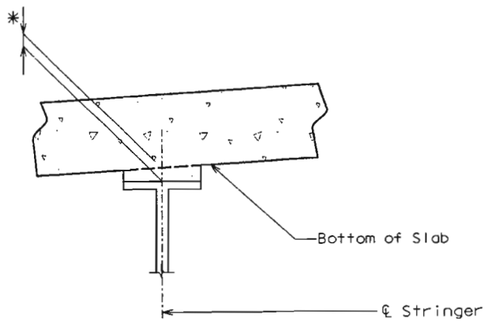


THEORETICAL
SLAB HAUNCH

* Note: If stringer elevations are different from that used in computing the theoretical slab haunch. it shall be necessary to adjust the slab haunches or raise the grade uniformly throughout the structure.
No payment will be made for additional labor or materials required for variation in haunching or grade adjustment.

| | | | | | | | | | | | | | |
|---|---|---|---|---|---|---|---|---|---|---|---|---|---|
| Stringer No. 1 | 0" | 1/4" | 1/4" | 1/8" | 0" | 1/4" | 7/16" | 1/4" | 0" | 1/8" | 1/4" | 1/4" | 0" |
| Stringer No. 2 | 0" | 1/4" | 1/4" | 1/8" | 0" | 1/4" | 7/16" | 1/4" | 0" | 1/8" | 1/4" | 1/4" | 0" |
| Stringer No. 2A | 0" | 1/8" | 3/16" | 1/16" | 0" | 3/16" | 5/16" | 3/16" | 0" | 1/16" | 3/16" | 1/8" | 0" |
| Stringer No. 3 | 0" | 1/4" | 5/16" | 1/8" | 0" | 1/4" | 7/16" | 1/4" | 0" | 1/8" | 5/16" | 1/4" | 0" |
| Stringer No. 3A | 0" | 1/8" | 3/16" | 1/16" | 0" | 3/16" | 5/16" | 3/16" | 0" | 1/16" | 3/16" | 1/8" | 0" |
| Stringer No. 4 | 0" | 3/16" | 3/16" | 1/16" | 0" | 3/16" | 5/16" | 3/16" | 0" | 1/16" | 3/16" | 3/16" | 0" |
| Stringer No. 5 | 0" | 1/4" | 5/16" | 1/8" | 0" | 1/4" | 7/16" | 1/4" | 0" | 1/8" | 5/16" | 1/4" | 0" |
| Stringer No. 6 | 0" | 1/4" | 1/4" | 1/8" | 0" | 1/4" | 7/16" | 1/4" | 0" | 1/8" | 1/4" | 1/4" | 0" |

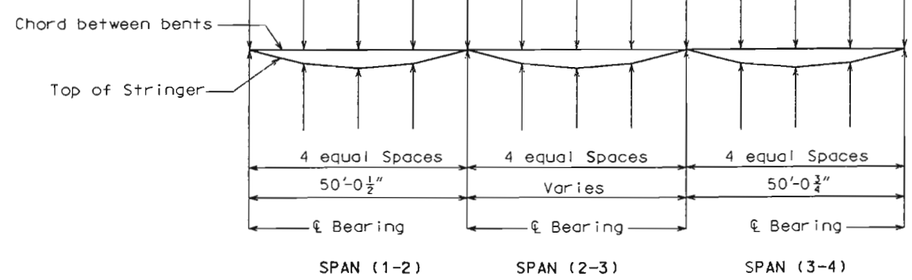


DEAD LOAD DEFLECTION DIAGRAM

①15% for stringers 1, 2, 3, 7 & 8
28% for stringers 4 & 6
21% for stringers 5

Note: ① of dead load deflection on stringers is due to the weight of structural steel.
Dead load deflection includes weight of structural steel. 8 1/2" concrete slab & barrier curb.

STATE OF MISSOURI
GREGORY E. SANDERS
NUMBER E-2001182167
REGISTERED PROFESSIONAL ENGINEER
DATE 8-22-02

Detailed July 2002
Checked July 2002

Note: This drawing is not to scale. Follow dimensions.



JACKSON COUNTY A09953

REV.

T:\br-proj\Rpuchg\j410712\A09953\g09953_019.dgn 11:12:53 AM 08/22/2002

| State | Proj. No. | Sheet No. |
|---|---|---|
| MO | | B160 |

Note: All longitudinal dimensions shown are horizonal arc dimensions.
For theoretical slab haunching diagram, see sheet No. 19.
For section thru slab, see sheet No. 22.
For details and reinforcement of safety barrier curb, see sheet No. 23 & 24.
Shift longitudinal steel to clear future drilling for anchors for tie downs for temporary Type F Curb (see sheet no. 3)

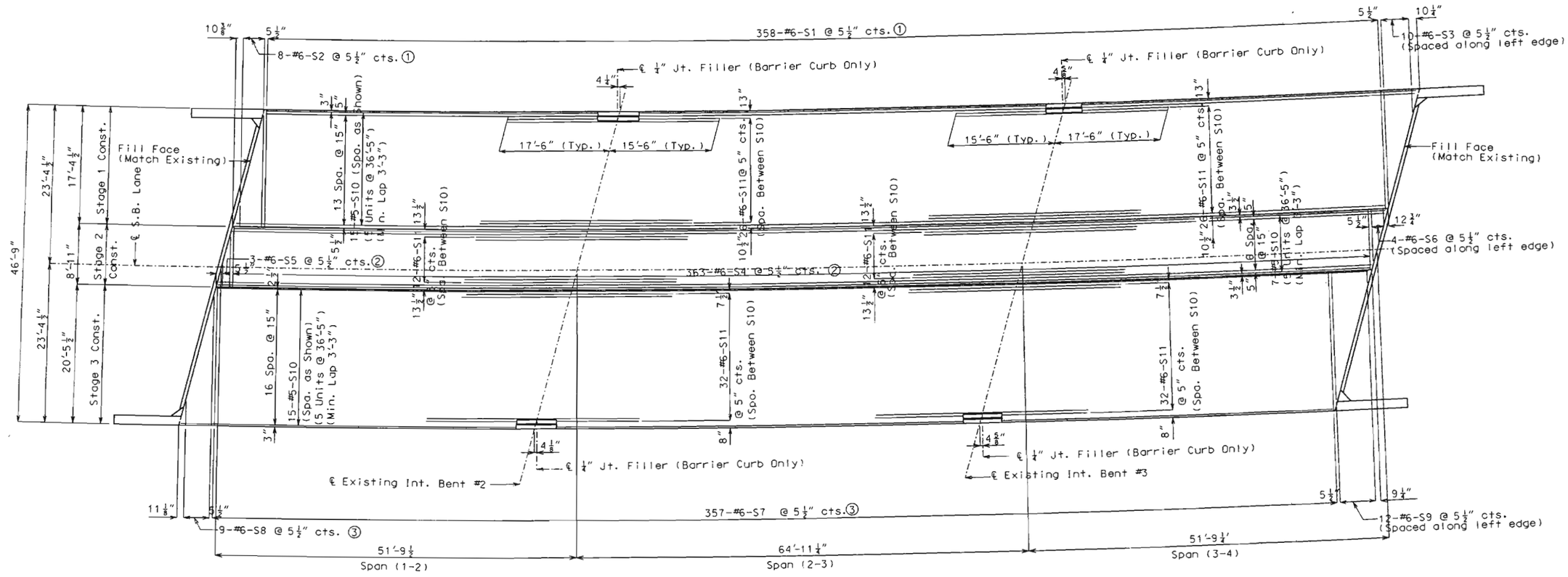


PLAN OF SLAB SHOWING TOP REINFORCEMENT

Note: The contractor shall use a mechanical bar splice for S7, S9, S4 & S6 bars at the specified location. The total bar lengths for S7, S9, S4 & S6 bars shown in the Bill of Reinforcing Steel are determined based on the end of the bars being located flush to the face of the construction joint. Extra bar lengths from that specified in the bar list may be required depending on the specific splice system to be used. No payment will be made for additional bar lengths added. See job special provisions for additional requirements of mechanical bar splices. Mechanical bar splices for epoxy coated bars shall be epoxy coated.

①Spaced radially along right edge of stage 1 construction
②Spaced radially along right edge of stage 2 construction
③Spaced radially along right edge of stage 3 construction

STATE OF MISSOURI
GREGORY E. SANDERS
NUMBER E-2000162167
REGISTERED PROFESSIONAL ENGINEER
DATE 8-22-02

Detailed May 2002
Checked July 2002

Note: This drawing is not to scale. Follow dimensions.



JACKSON COUNTY A09953

REV.

T:\br-proj\hauchg\j410712\A09953\a09953_020N.dgn 11:12:36 AM 08/22/2002

| State | Proj. No. | Sheet No. |
|---|---|---|
| MO | | B161 |

Note: All longitudinal dimensions shown are horizonal arc dimensions.
For theoretical slab haunching diagram. see sheet No. 19.
For section thru slab. see sheet No. 22.
For details and reinforcement of safety barrier curb. see sheet No. 23 & 24.

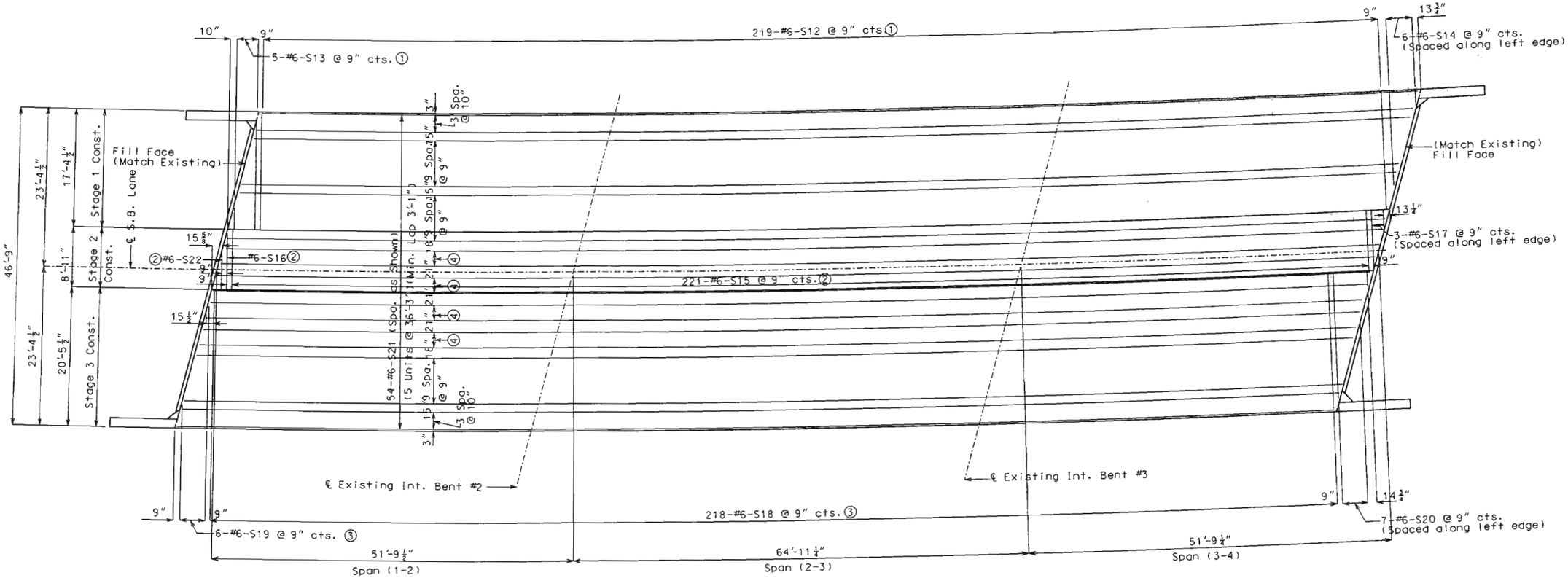


PLAN OF SLAB SHOWING BOTTOM REINFORCEMENT

Note: The contractor shall use a mechanical bar splice for S18, S20, S15 & S17 bars at the specified location. The total bar lengths for S18, S20, S15 & S17 bars shown in the Bill of Reinforcing Steel are determined based on the end of the bars being located flush to the face of the construction joint. Extra bar lengths from that specified in the bar list may be required depending on the specific splice system to be used. No payment will be made for additional bar lengths added. See job special provisions for additional requirements of mechanical bar splices. Mechanical bar splices for epoxy coated bars shall be epoxy coated.

①Spaced radially along right edge of stage 1 construction
②Spaced radially along right edge of stage 2 construction
③Spaced radially along right edge of stage 3 construction
④3 Spa. @ 9"

STATE OF MISSOURI
GREGORY E. SANDERS
NUMBER E-2000142187
REGISTERED PROFESSIONAL ENGINEER
DATE 8-22-02

Detailed May 2002
Checked July 2002

Note: This drawing is not to scale. Follow dimensions.



JACKSON COUNTY A09953 REV.

f:\br-proj\houchg\j4l0712.A09953\a09953_021N.dgn 11:12:59 AM 08/22/2002

| State | Proj. No. | Sheet No. |
|---|---|---|
| MO | | B162 |

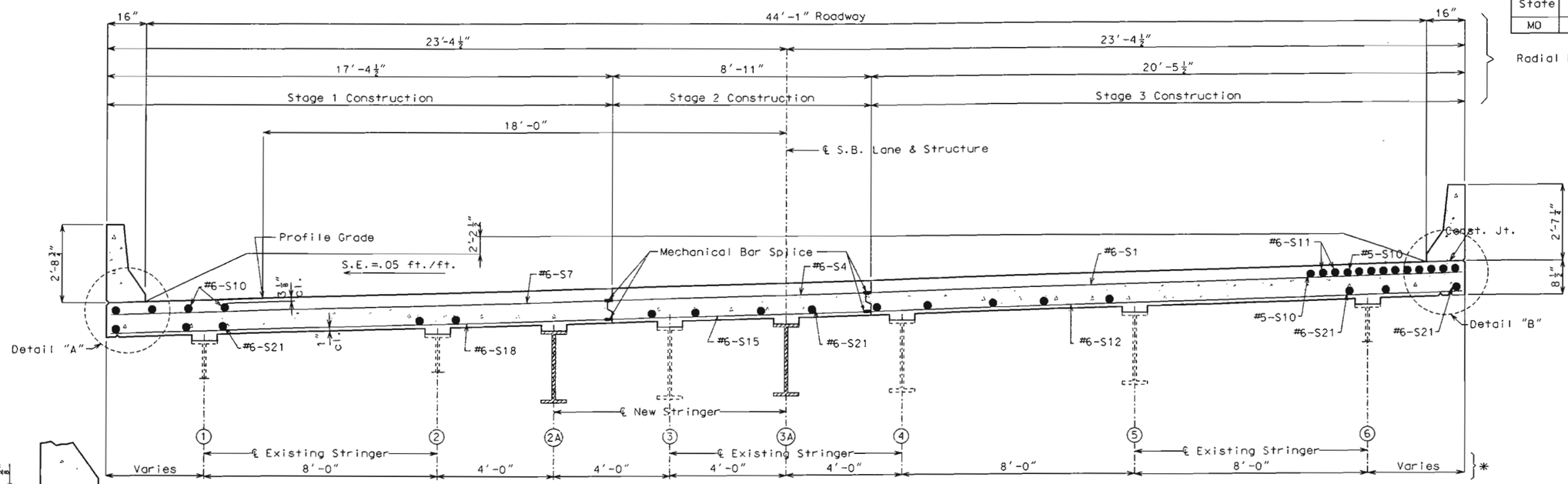


HALF SECTION NEAR ℄ SPAN

HALF SECTION NEAR INT. BENT

* Dimensions shown are perpendicular to girder. Dimensions between stringer splice location S1 & S2 will vary.

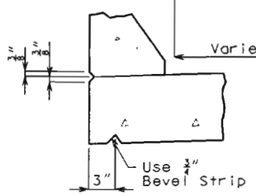


DETAIL "A"

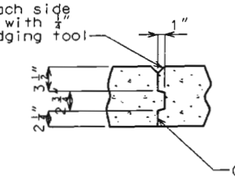


SLAB CONSTRUCTION JOINT DETAIL

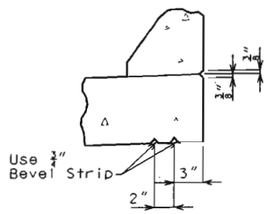


DETAIL "B"

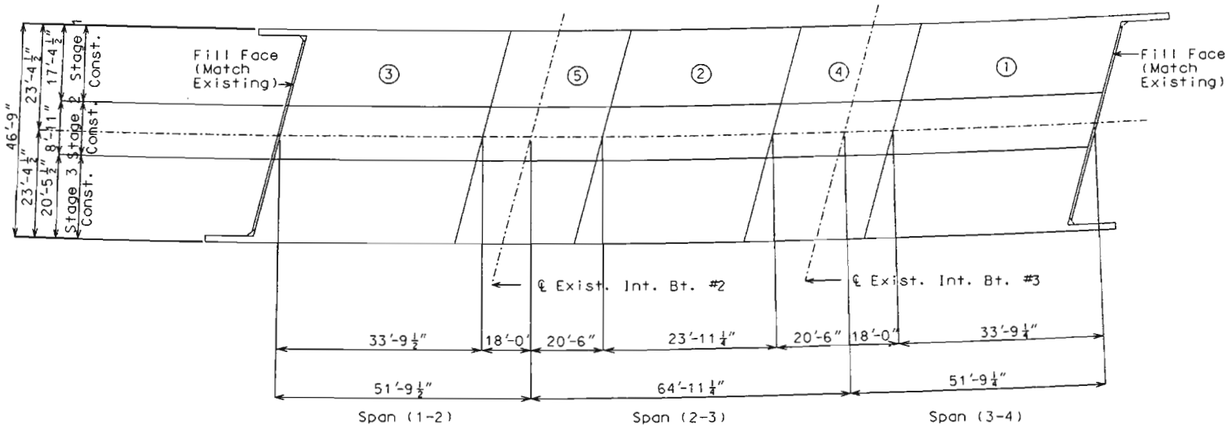


SLAB POURING SEQUENCE

| | Sequence of Pours | | | | | Min. rate of pour cu. yds./hr. | |
|---|---|---|---|---|---|---|---|
| | Direction | | | | | With retarder | No retarder |
| Basic sequence | 1 | 2 | 3 | 4 | 5 | 25 | 25 |
| | Either direction | | | | | | |
| Alternate pours to the basic skip sequence are subject to the approval of the engineer in accordance with Section 703.3.12.4 of Missouri Standard Specifications. | | | | | | | |
| Alternate "A" pours | 1 | | 5 + 2 | | 4 + 3 | 25 | 25 |
| | End to 5 | | 1 to 4 | | 2 to end | | |
| Alternate "B" pours | 1 + 5 + 2 | | | 4 + 3 | | 25 | 25 |
| | End to 4 | | | 2 to end | | | |
| Alternate "C" pours | 1 + 5 + 2 + 4 + 3 | | | | | 25 | 25 |
| | End to end | | | | | | |

Note: The contractor shall pour and satisfactorily finish the slab pours at the rate given. Retarder, if used, shall be an approved type and retard the set of concrete to 2.5 hours.

SLAB POURING SEQUENCE

STATE OF MISSOURI
GREGORY E. SANDERS
NUMBER E-2001162187
REGISTERED PROFESSIONAL ENGINEER

DATE 8-22-02

REV.

Detailed May 2002
Checked July 2002

Note: This drawing is not to scale. Follow dimensions.



JACKSON COUNTY A09953

T:\Br-proj\hbuchg\j410712\a09953\a09953_022N.dgn 11:12:42 AM 08/22/2002

| State | Proj. No. | Sheet No. |
|---|---|---|
| MO | | B163 |

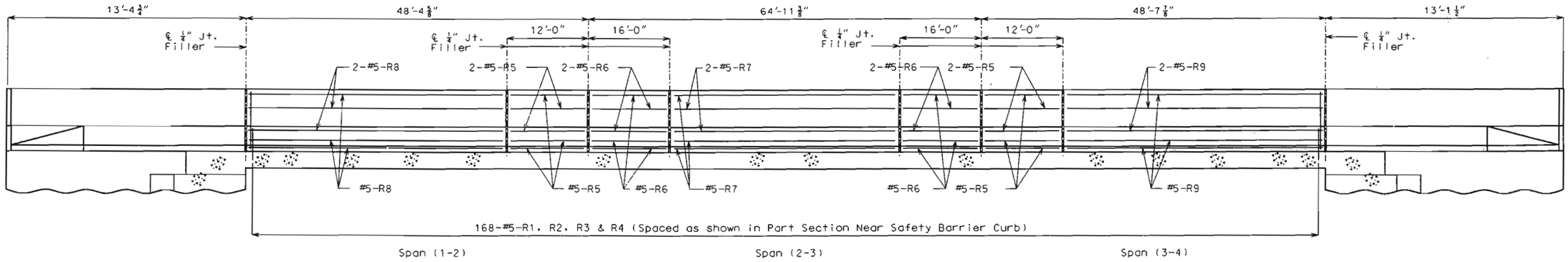


## SECTION NEAR LEFT BARRIER CURB

Note: Longitudinal dimensions shown are horizontal arc dimensions along outside edge of slab.
For details of safety barrier curb at end bents, see sheet No. 25 & 26.

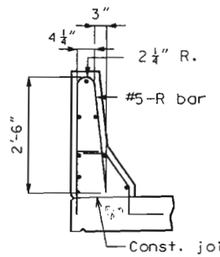


### R-BAR PERMISSIBLE ALTERNATE SHAPE

The R1 and R2 bar combination may be furnished as one bar, as shown, at the contractor's option.
(All dimensions are out to out.)

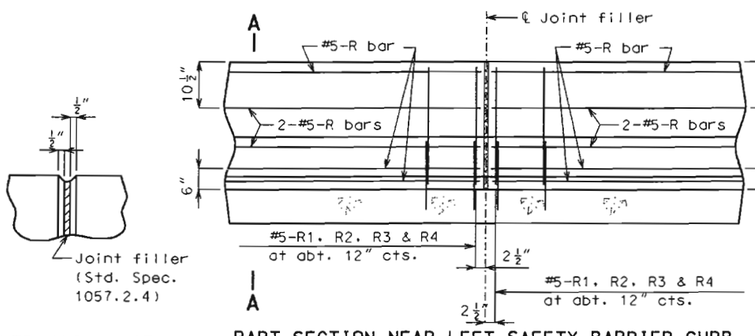


FILLED JOINT DETAIL

PART SECTION NEAR LEFT SAFETY BARRIER CURB (CAST-IN-PLACE CONVENTIONAL FORMING OPTION)

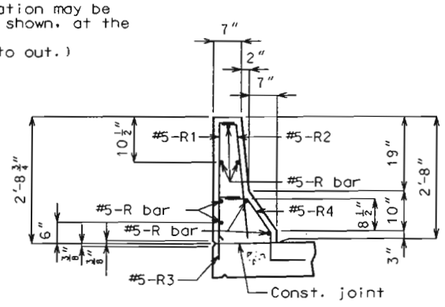


PART SECTION A-A

Note: Use a minimum lap of 3'-0" for #5 horizontal safety barrier curb bars.

The cross-sectional area above the slab = 2.30 sq. ft.

Note: Top of safety barrier curb shall be built parallel to grade with safety barrier curb joints(except at end bents) normal to grade.

All exposed edges of safety barrier curb shall have either a ½" radius or a ¾" bevel, unless otherwise noted.

When the safety barrier curb is bid per meter, the contract unit price shall include the cost of all concrete and reinforcement, complete in place.

Concrete in the safety barrier curb shall be Class B1.

Measurement of safety barrier curb is to the nearest linear foot for each structure, measured along the outside top of slab from end of wing to end of wing.

STATE OF MISSOURI
GREGORY E. SANDERS
NUMBER E-2000162187
REGISTERED PROFESSIONAL ENGINEER
DATE 8-22-02

Detailed May 2002
Checked July 2002



JACKSON COUNTY A09953

| State | Proj. No. | Sheet No. |
|---|---|---|
| MO | | B164 |

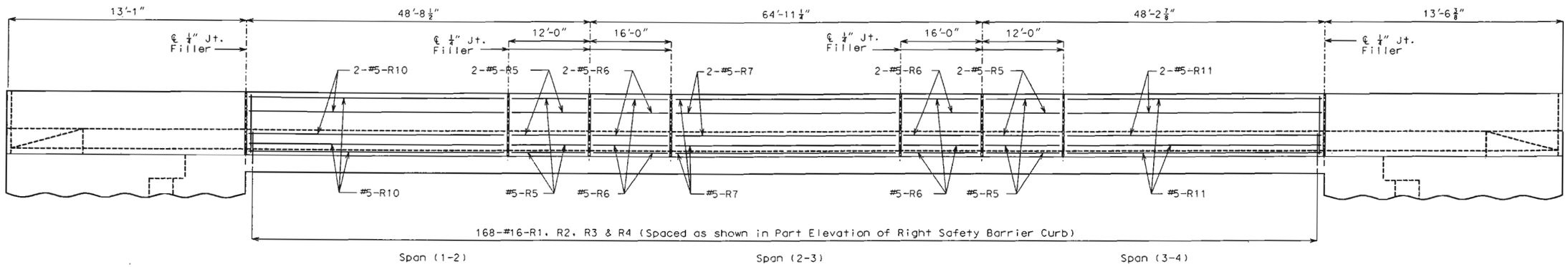


## ELEVATION OF RIGHT BARRIER CURB

Note: Longitudinal dimensions shown are horizontal arc dimensions along outside edge of slab.
For details of safety barrier curb at end bents, see sheet No. 25 & 26.

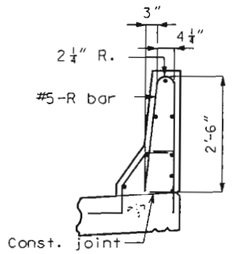


## R-BAR PERMISSIBLE ALTERNATE SHAPE

The R1 and R2 bar combination may be furnished as one bar, as shown, at the contractor's option.
(All dimensions are out to out.)

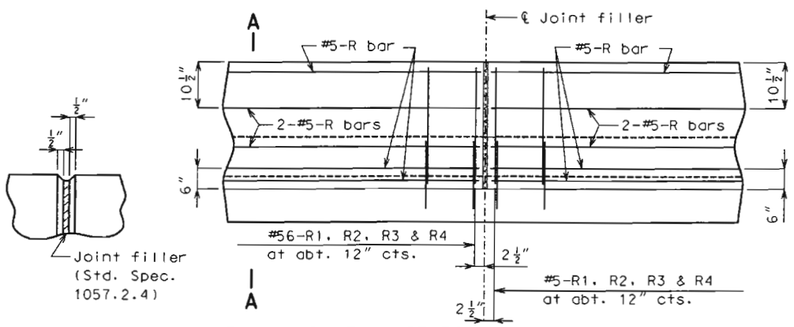





FILLED JOINT DETAIL

PART ELEVATION OF RIGHT SAFETY BARRIER CURB
(CAST-IN-PLACE CONVENTIONAL FORMING OPTION)

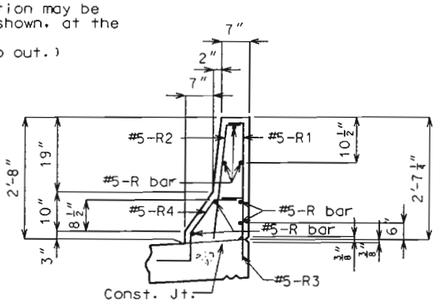


PART SECTION A-A

Note: Use a minimum lap of 3'-0" for #5 horizontal safety barrier curb bars.

The cross-sectional area above the slab = 2.22 Sq. Ft.

Note: Top of safety barrier curb shall be built parallel to grade with safety barrier curb joints (except at end bents) normal to grade.

All exposed edges of safety barrier curb shall have either a ½" radius or a ¾" bevel, unless otherwise noted.

When the safety barrier curb is bid per meter, the contract unit price shall include the cost of all concrete and reinforcement, complete in place.

Concrete in the safety barrier curb shall be Class B1.
Measurement of safety barrier curb is to the nearest linear foot for each structure, measured along the outside top of slab from end of wing to end of wing.

STATE OF MISSOURI GREGORY E. SANDERS NUMBER E-2001152167 REGISTERED PROFESSIONAL ENGINEER
DATE 8-22-02

Detailed May 2002
Checked July 2002



JACKSON COUNTY A09953

| State | Proj. No. | Sheet No. |
|---|---|---|
| MO | | B165 |

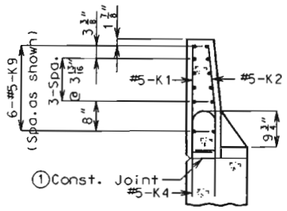


SECTION A-A

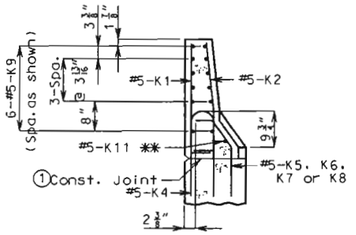


SECTION B-B

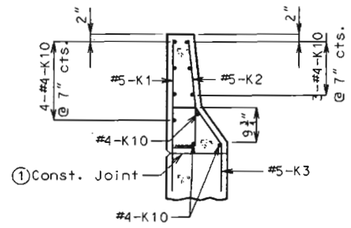


SECTION C-C

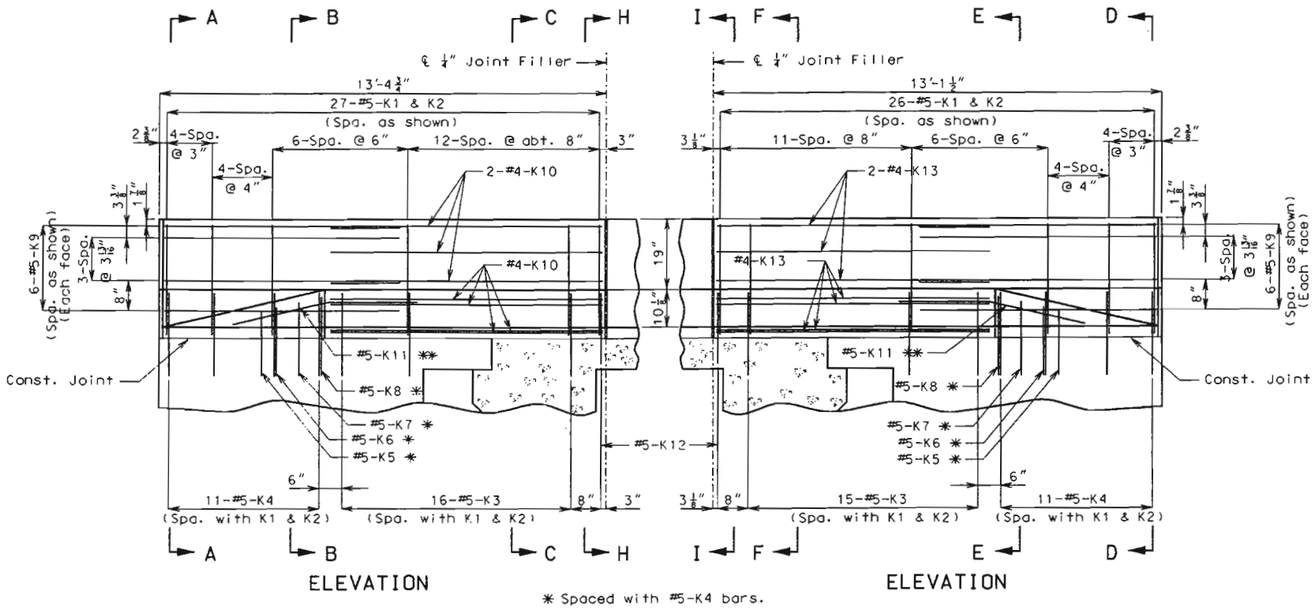


ELEVATION ELEVATION

* Spaced with #5-K4 bars.

** Fit bar to follow transition face of curb.

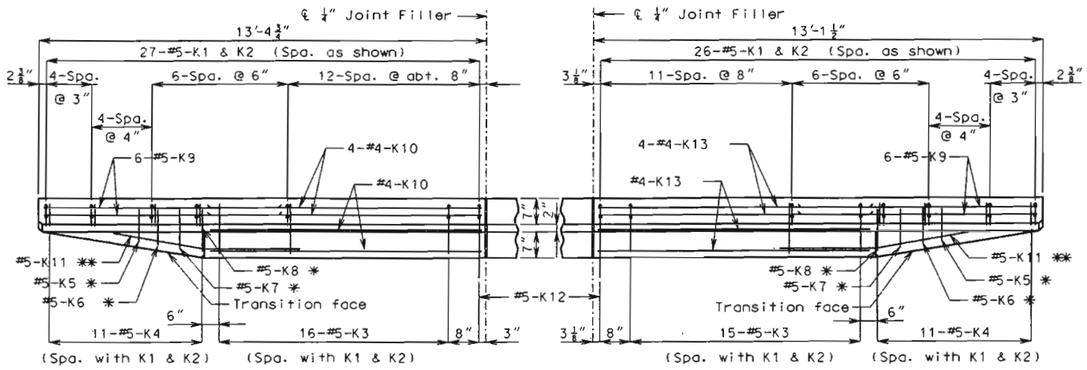


PLAN PLAN




SECTION H-H




SECTION I-I

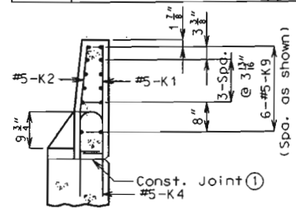


SECTION D-D

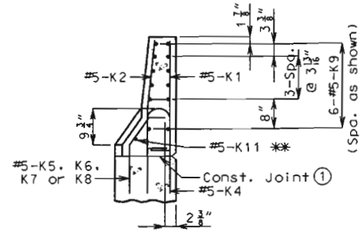


SECTION E-E

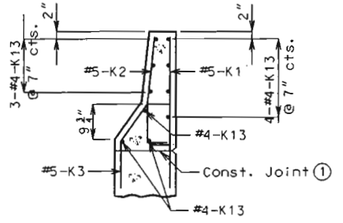


SECTION F-F

1 Slope top of wing to match superelevation

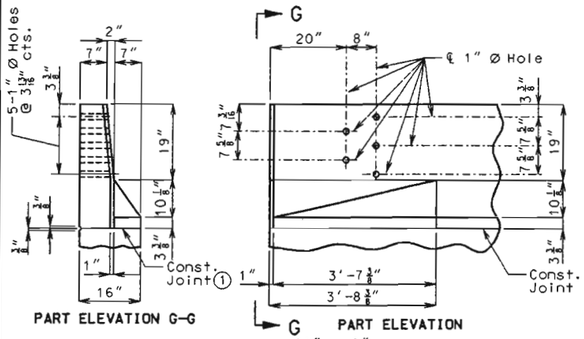


DETAILS OF GUARD RAIL ATTACHMENT

The top two K9, K10 or K13 bars shall be kept with position close to those shown in Sections A-A thru F-F, H-H and I-I.

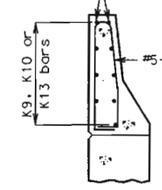


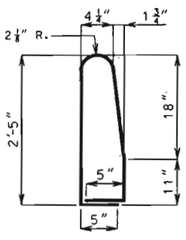


(K3 or K4 thru K8 bars not shown for clarity)

K1-K2 BAR PERMISSIBLE ALTERNATE SHAPE (***)

(***) The K1 and K2 bar combination may be furnished as one bar as shown, at the contractor's option.

NOTE: Use a minimum lap of 2'-0" between K9 and K10 bars.

# DETAILS OF LEFT SAFETY BARRIER CURB AT END BENTS

STATE OF MISSOURI GREGORY E. SANDERS NUMBER E-2000106187 REGISTERED PROFESSIONAL ENGINEER

DATE 8-22-02

Detailed May 2002
Checked July 2002

NOTE: THIS DRAWING IS NOT TO SCALE. FOLLOW DIMENSIONS.



JACKSON COUNTY A09953

| State | Proj. No. | Sheet No. |
|---|---|---|
| MO | | B166 |

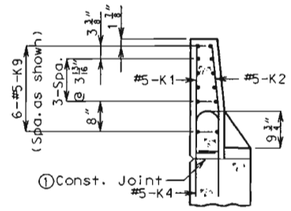


SECTION A-A

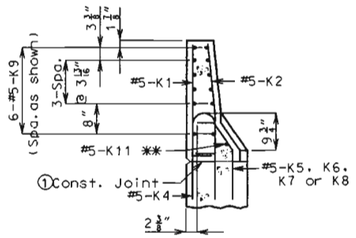


SECTION B-B

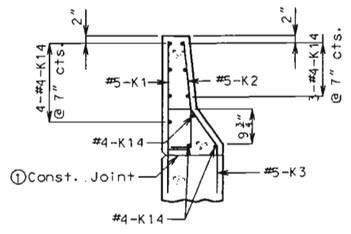


SECTION C-C

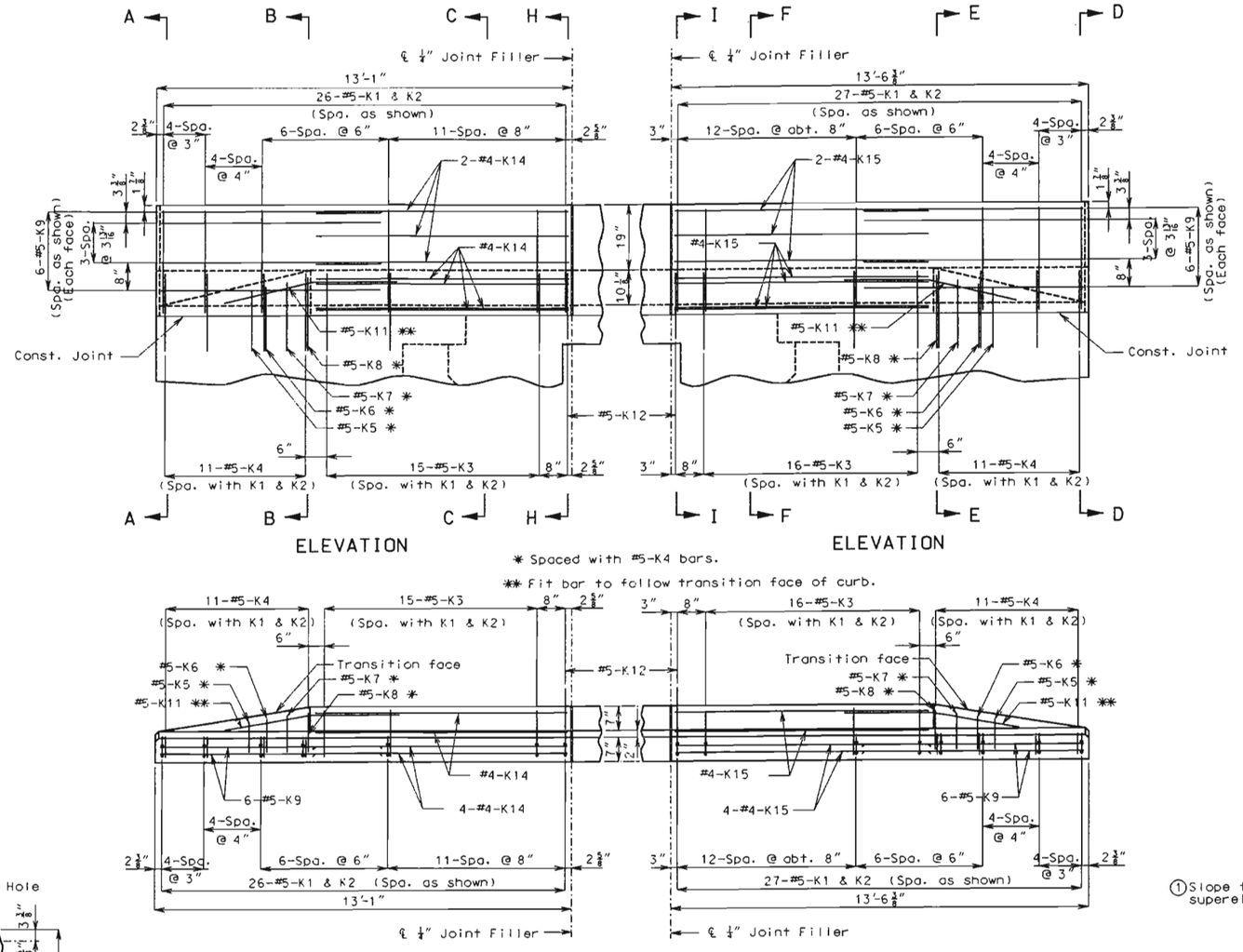


ELEVATION

ELEVATION

* Spaced with #5-K4 bars.

** Fit bar to follow transition face of curb.




PLAN

PLAN

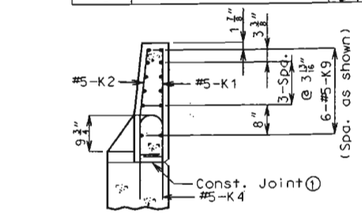


SECTION D-D

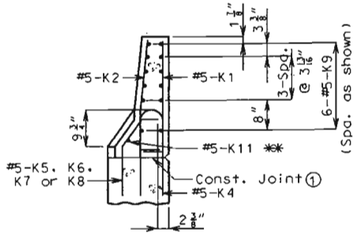


SECTION E-E

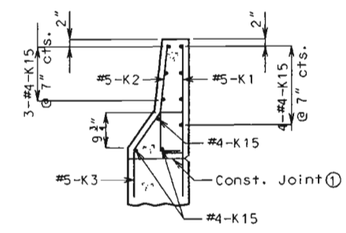


SECTION F-F

①Slope top of wing to match superelevation

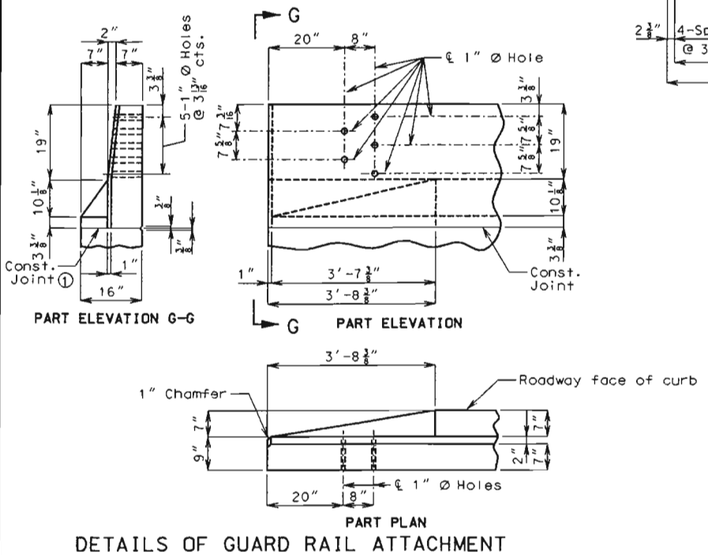


DETAILS OF GUARD RAIL ATTACHMENT

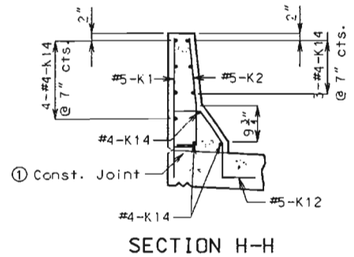


SECTION H-H

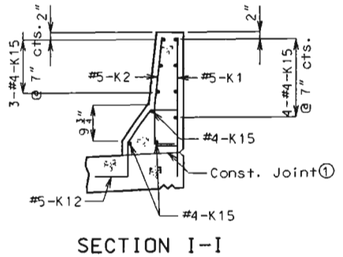


SECTION I-I

NOTE: Use a minimum lap of 2'-0" between K9 and K10 bars.

The top two K9, K14 or K15 bars shall be kept with position close to those shown in Sections A-A thru F-F, H-H and I-I.

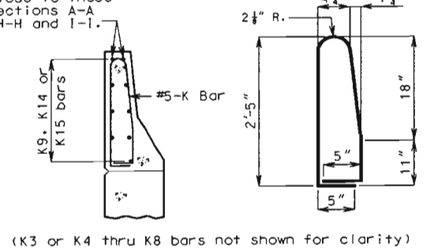


(K3 or K4 thru K8 bars not shown for clarity)

K1-K2 BAR PERMISSIBLE ALTERNATE SHAPE (***)

(***) The K1 and K2 bar combination may be furnished as one bar as shown, at the contractor's option.

# DETAILS OF RIGHT SAFETY BARRIER CURB AT END BENTS

STATE OF MISSOURI GREGORY E. SANDERS NUMBER E-2002021167 ENGINEER

DATE 8-22-02

Detailed May 2002
Checked July 2002

NOTE: THIS DRAWING IS NOT TO SCALE. FOLLOW DIMENSIONS.



JACKSON COUNTY A09953

I:\br-proj\hbuchg\pw-12\A09953\a09953_026.dgn 08:26:56 AM 08 22, 2002

| State | Proj. No. | Sheet No. |
|---|---|---|
| MO | | B167 |

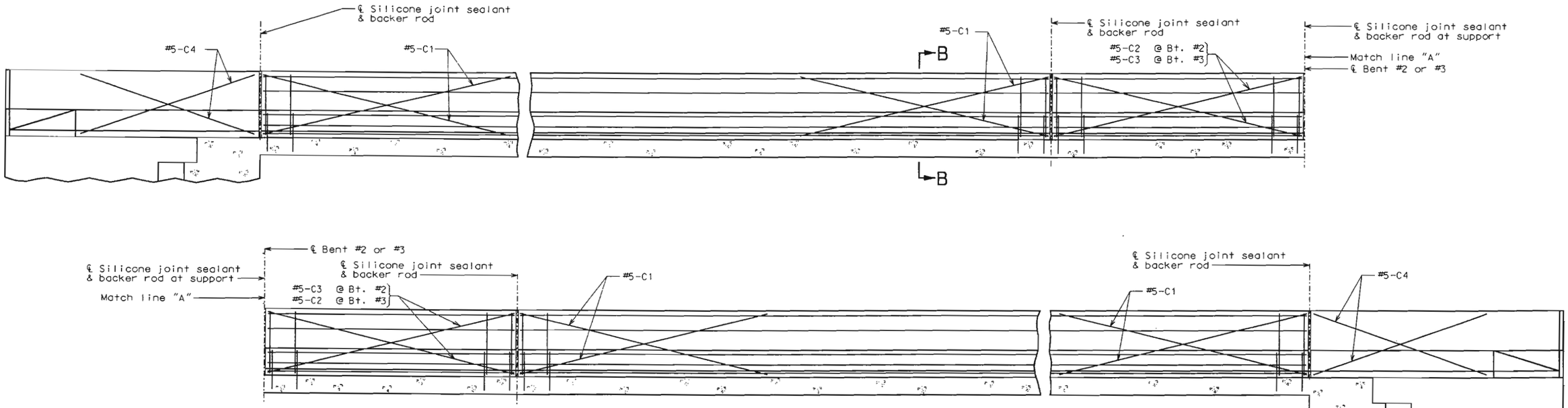


## TYPICAL SECTION NEAR LEFT SAFETY BARRIER CURB AT SUPPORT LOCATIONS (OPTIONAL SLIP-FORM BRIDGE SAFETY BARRIER CURB)

Notes:

Top of safety barrier curb shall be built parallel to grade with safety barrier curb joints (except at end bents) normal to grade.

When the safety barrier curb is bid by linear feet, the contract unit price shall include the cost of all concrete and reinforcement, complete-in-place.

Concrete in the safety barrier curb shall be Class B-1.

Measurement of safety barrier curb is to the nearest linear foot for each structure, measured along the outside top of slab from end of wing to end of wing.

Note:

Joint sealant and backer rods shall be used on all slip-form bridge safety barrier curbs instead of joint filler.

Plastic waterstop shall not be used with slip-form option.

C Bars (Slip-form option only) shall be used in addition to cast-in-place conventional forming reinforcement for bridge safety barrier curb.

For Slip-Form option, all sides of the safety barrier curb shall have a vertically broomed finish and the curb top shall have a tranversely broomed finish.

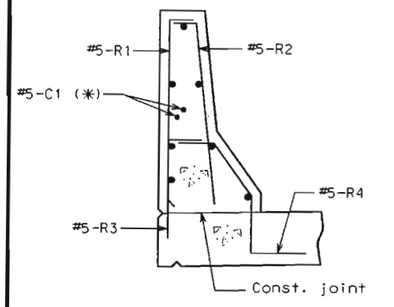


PART SECTION B-B

Notes:

(*) Each side of joint location.

(**) The R1 and R2 bar combination may be furnished as one bar, as shown, at the contractor's option.
(All dimensions are out to out.)

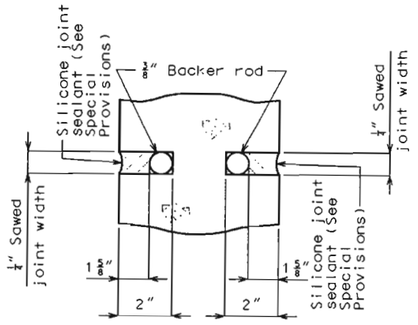


SECTION A-A

Note

Cost of silicone joint sealant and backer rod complete in place to be included on the contract unit price for Safety Barrier Curb.

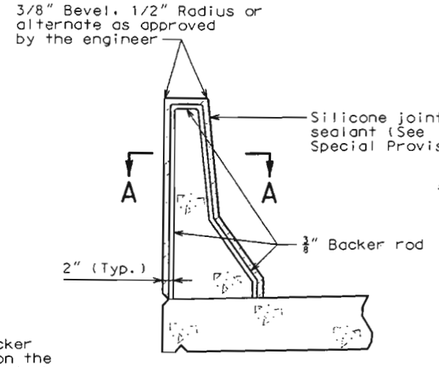


SECTION THRU JOINT

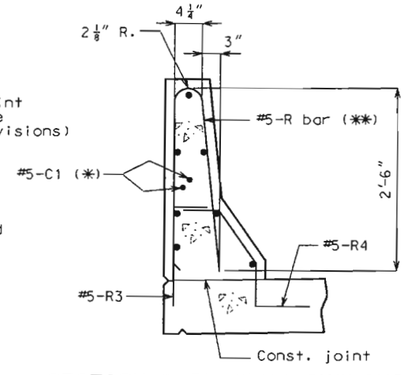


SECTION THRU CURB SHOWING R-BARS

## OPTIONAL SLIP-FORM BRIDGE SAFETY BARRIER CURB

(Left barrier curb shown, right barrier curb similar.)

Note: This drawing is not to scale. Follow dimensions.

STATE OF MISSOURI GREGORY E. SANDERS NUMBER E-2000182987 REGISTERED ENGINEER
DATE 8-22-02

Detailed July 2002
Checked July 2002



JACKSON COUNTY A09953

f:\br-proj\bouchg\j410712\A09953\n09953_027.dgn 11:12:58 AM 08/22/2002

| State | Proj. No. | Sheet No. |
|---|---|---|
| MO | | B168 |

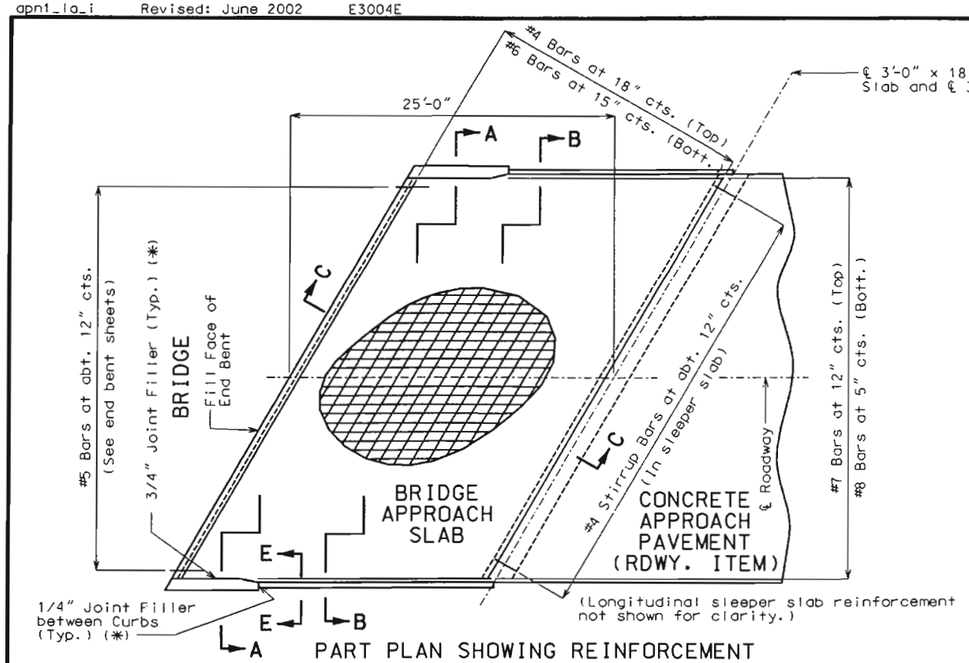


PART PLAN SHOWING REINFORCEMENT

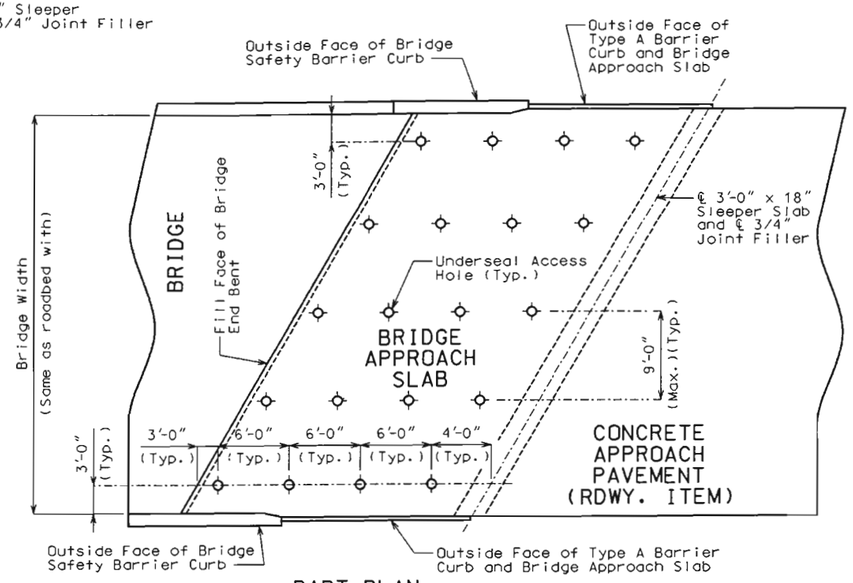


PART PLAN
(SHOWING TYPICAL UNDERSEAL ACCESS HOLE LOCATIONS)

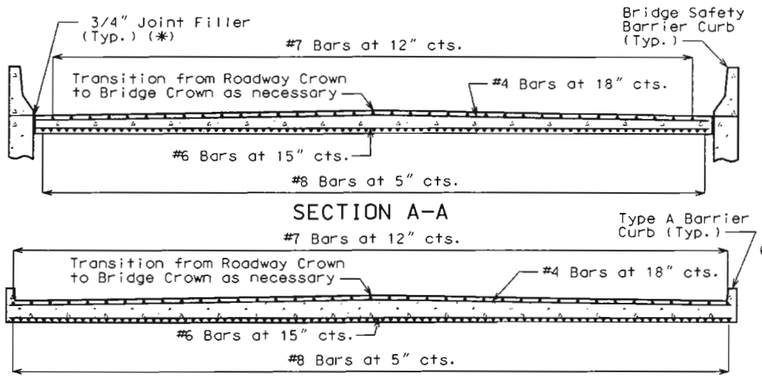


Note: With the approval of the Engineer, the contractor may crown the bottom of the approach slab to match the crown of the roadway surface.

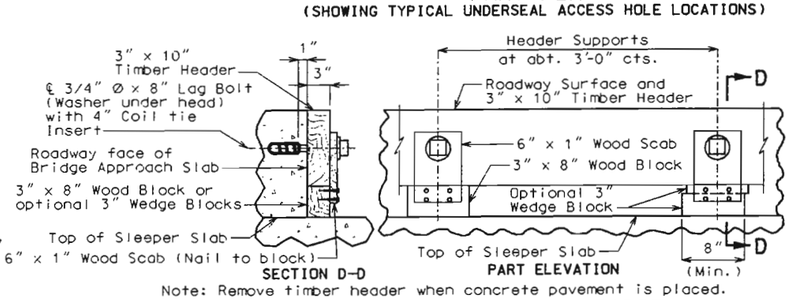


Note: Remove timber header when concrete pavement is placed.

DETAILS OF TIMBER HEADER

(*) Use 3/4" Joint Filler between vertical face of Approach Slab and Wing, except at the end of Safety Barrier Curb/Wing face use 1/4" Joint Filler. Seal joint with urethane joint sealant. See Special Provisions.

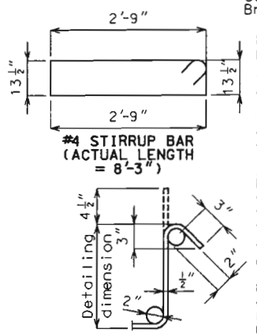


Note:
Nominal lengths are based on out to out dimensions shown in bending diagram and are listed for fabricators use (nearest inch).

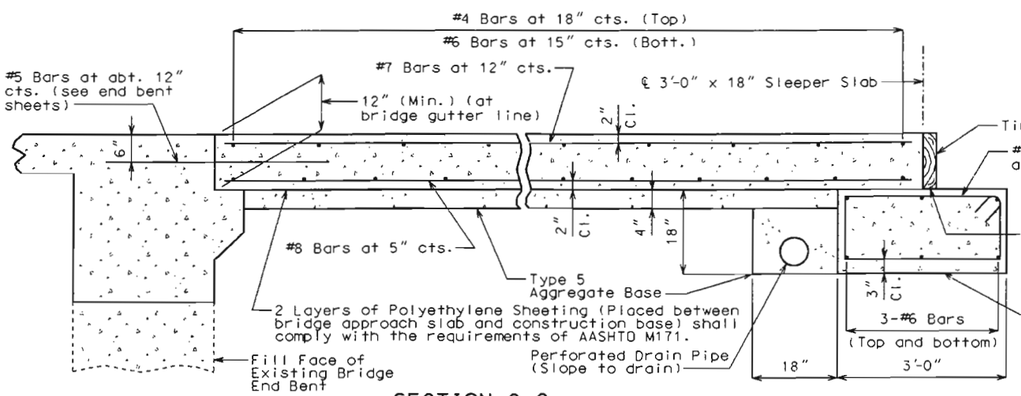


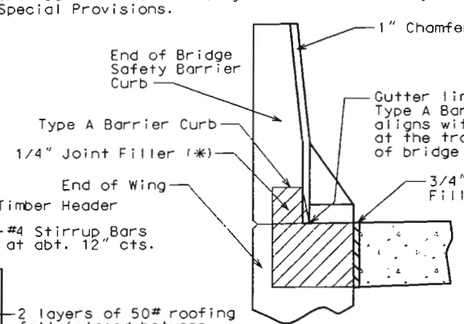


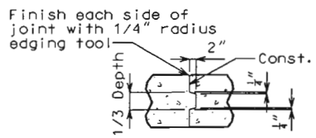


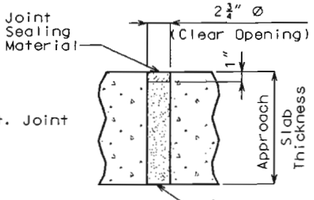


BRIDGE APPROACH SLAB

Note: This drawing is not to scale. Follow dimensions.

Sheet No. 28 of 31

## GENERAL NOTES:

All concrete for the bridge approach slab and sleeper slab shall be in accordance with Section 503 (f'c = 4,000 psi) of the Missouri Standard Specifications.

All joint filler shall meet the requirements of Section 1057.2.5 of the Missouri Standard Specifications, except as noted.

The reinforcing steel in the bridge approach slab and the sleeper slab shall be epoxy coated Grade 60 with Fy = 60,000 psi.

Minimum clearance to reinforcing steel shall be 1-1/2", unless otherwise shown.

The reinforcing steel in the bridge approach slab and the sleeper slab shall be continuous. The transverse reinforcing steel may be made continuous by lap splicing the #4 & #6 bars 18" and 26" respectively.

Mechanical bar splices will be permitted and shall develop at least 125 percent of the specified yield strength of the reinforcing bars being spliced. The contractor shall furnish the Engineer the manufacture's certification that this requirement is met and is required to follow the manufacturer's recommentation for installation.

Mechanical bar splices shall be epoxy coated in accordance with Section 710 of the Missouri Standard Specifications.

Hooks and bends shall be in accordance with the CRSI Manual of Standard Practice for Detailing Reinforced Concrete Structures, Stirrup and Tie Dimensions.

The contractor shall pour and satisfactorily finish the bridge slab before pouring the bridge approach slabs.

Longitudinal construction joints in approach slab and sleeper slab shall be aligned with longitudinal construction joints in bridge slab.

Payment for furnishing all materials, labor and excavation necessary to construct the approach slab, including the timber header, sleeper slab, underdrain, Type 5 aggregate base, joint filler and all other appurtenances and incidental work as shown on this sheet, complete in place, shall be considered as completely covered under the contract unit price for Bridge Approach Slab (Bridge), per sq. yd.

For Concrete Approach Pavement details, see roadway plans.

See Missouri Standard Plans Drawing 609.00 for details of Type A Barrier Curb.

When a lap splice is required for the use of a mechanical bar splice, the minimum lap length shall be 40" for transverse approach slab bar splices.

At the contractor's option, Grade 40 reinforcement may be substituted for the Grade 60 #5 dowel bars connecting the bridge approach slab to the bridge abutment. No additional payment will be made for this substitution.

When Grade 40 reinforcement is substituted for the Grade 60 #5 dowel bars connecting the bridge approach slab to the bridge abutment, the reinforcement may be bent up to 90 degrees with a 2" minimum radius near the abutment to allow compaction of the backfill material near the abutment. Damage to epoxy coating shall be repaired according to Section 710.3.3 of the Missouri Standard Specifications.

Drain pipe may be either 6" diameter corrugated metallic-coated pipe underdrain, 4" diameter corrugated polyvinyl chloride (PVC) drain pipe, or 4" diameter corrugated polyethylene (PE) drain pipe.

STATE OF MISSOURI
GREGORY E. SANDERS
NUMBER E-2007021261
REGISTERED PROFESSIONAL ENGINEER
DATE 9-12-02

Detailed JULY 2002
Checked JULY 2002

JACKSON COUNTY A09953

REV.

| State | Proj. No. | Sheet No. |
|---|---|---|
| MO | | B169 |

# BILL OF REINFORCING STEEL

| NO. REQ'D. | SIZE | MARK | LOCATION | EPOXY (E) | SHAPE NO. | STIRRUP (S) | SUBSTR. (X) | VARIES (V) | NO. EACH | B FT. IN. | C FT. IN. | D FT. IN. | E FT. IN. | F FT. IN. | H FT. IN. | K FT. IN. | NOMINAL LENGTH FT. IN. | ACTUAL LENGTH FT. IN. | WEIGHT LBS. |
|---|---|---|---|---|---|---|---|---|---|---|---|---|---|---|---|---|---|---|---|
| | | | SUBSTR. | | | | | | | | | | | | | | | | |
| | | | INT. BT. 2 | | | | | | | | | | | | | | | | |
| 12 | 6 | H20 | | | 20 | | X | | | 4 10.000 | | | | | | | 4 10 | 4 10 | 87 |
| 4 | W5 | W20 | A.B. WELL | | 20 | | X | | | 18.000 | 9.125 | | | | | | 26 1 | 26 1 | 17 |
| | | | INT. BT. 3 | | | | | | | | | | | | | | | | |
| 12 | 6 | H30 | BEAM STEP | | 20 | | X | | | 4 10.000 | | | | | | | 4 10 | 4 10 | 87 |
| 4 | W5 | W20 | A.B. WELL | | 20 | | X | | | 18.000 | 9.125 | | | | | | 26 1 | 26 1 | 17 |
| | | | SUPER. | | | | | | | | | | | | | | | | |
| | | | END BENT 1 | | | | | | | | | | | | | | | | |
| 5 | 6 | F1 | WING BRACE | | 23 | | | | | 14.000 | 5 10.000 | 14.000 | 8.500 | 11.125 | 8.500 | 11.125 | 8 2 | 8 1 | 61 |
| 4 | 6 | F2 | DIAPHRAGM | | 21 | | | | | 2 10.000 | 5 0.000 | | | | 2 9.000 | 8.375 | 7 10 | 7 7 | 46 |
| 5 | 6 | F3 | WING BRACE | | 23 | | | | | 13.875 | 4 8.000 | 13.875 | 11.000 | 8.500 | 11.000 | 8.500 | 7 0 | 6 11 | 52 |
| 4 | 6 | F4 | DIAPHRAGM | | 15 | | | | | 2 10.000 | 4 6.000 | | | | 2 9.000 | 8.375 | 7 4 | 7 3 | 44 |
| 4 | 6 | H1 | DIAPHRAGM | E | 20 | | | | | 17 9.000 | | | | | | | 17 9 | 17 9 | 107 |
| 4 | 6 | H2 | DIAPHRAGM | E | 20 | | | | | 9 1.000 | | | | | | | 9 1 | 9 1 | 55 |
| 4 | 6 | H3 | DIAPHRAGM | E | 20 | | | | | 20 11.000 | | | | | | | 20 11 | 20 11 | 126 |
| 8 | 6 | H4 | DIAPHRAGM | | 20 | | | | | 17 9.000 | | | | | | | 17 9 | 17 9 | 213 |
| 8 | 6 | H5 | DIAPHRAGM | | 20 | | | | | 9 1.000 | | | | | | | 9 1 | 9 1 | 109 |
| 8 | 6 | H6 | DIAPHRAGM | | 20 | | | | | 20 11.000 | | | | | | | 20 11 | 20 11 | 251 |
| 3 | 4 | H7 | APP. KEY | E | 20 | | | | | 15 3.000 | | | | | | | 15 3 | 15 3 | 31 |
| 1 | 4 | H8 | APP. KEY | E | 20 | | | | | 9 1.000 | | | | | | | 9 1 | 9 1 | 6 |
| 1 | 4 | H9 | APP. KEY | E | 20 | | | | | 18 6.000 | | | | | | | 18 6 | 18 6 | 12 |
| 44 | 5 | H10 | DIAPHRAGM | E | 20 | | | | | 2 6.000 | | | | | | | 2 6 | 2 6 | 115 |
| 4 | 6 | H11 | WING | E | 20 | | | | | 11 5.000 | | | | | | | 11 5 | 11 5 | 69 |
| 4 | 6 | H12 | WING | | 20 | | | | | 11 5.000 | | | | | | | 11 5 | 11 5 | 69 |
| 8 | 6 | H13 | WING | | 20 | | | V | 2 | 11 4.000 | | | | | | | 11 4 | 11 4 | |
| | | | INCREMENT = | | | | | | | 9 0.000 | | | | | | | 9 0 | 9 0 | 122 |
| | | | 9.375 INCH | | | | | | | | | | | | | | | | |
| 14 | 6 | H14 | WING | | 20 | | | V | 2 | 6 4.000 | | | | | | | 6 4 | 6 4 | |
| | | | INCREMENT = | | | | | | | 21.000 | | | | | | | 0 21 | 0 21 | 85 |
| | | | 9.125 INCH | | | | | | | | | | | | | | | | |
| 2 | 6 | H15 | WING | E | 20 | | | | | 11 5.000 | | | | | | | 11 5 | 11 5 | 34 |
| 4 | 6 | H16 | WING | | 20 | | | | | 11 5.000 | | | | | | | 11 5 | 11 5 | 69 |
| 6 | 6 | H17 | WING | | 20 | | | V | 2 | 11 3.000 | | | | | | | 11 3 | 11 3 | |
| | | | INCREMENT = | | | | | | | 8 11.000 | | | | | | | 8 11 | 8 11 | 91 |
| | | | 14.000 INCH | | | | | | | | | | | | | | | | |
| 8 | 6 | H18 | WING | | 20 | | | V | 2 | 6 3.000 | | | | | | | 6 3 | 6 3 | |
| | | | INCREMENT = | | | | | | | 2 10.000 | | | | | | | 2 10 | 2 10 | 55 |
| | | | 13.625 INCH | | | | | | | | | | | | | | | | |
| 8 | 6 | H19 | BEAM STEP | | 20 | | | | | 3 3.000 | | | | | | | 3 3 | 3 3 | 39 |
| 2 | 6 | T1 | WING | | 25 | | | | | 2 1.000 | 10 11.500 | 14.000 | | | 7 2.750 | 8 2.875 | 14 3 | 14 2 | 43 |
| 2 | 6 | T2 | WING | | 25 | | | | | 2 1.000 | 9 4.875 | 20.000 | | | 4 8.375 | 8 1.750 | 13 2 | 13 1 | 39 |
| 96 | 5 | U1 | DIAPHRAGM | E | 10 | S | | | | | 4 0.000 | 2 10.000 | | | | | 10 10 | 10 8 | 1068 |
| 59 | 6 | U2 | DIAPHRAGM | E | 19 | S | | | | 4 0.000 | 5 0.000 | | | | | | 9 0 | 8 10 | 783 |
| 42 | 4 | U3 | APP. KEY | E | 10 | S | | | | | 18.000 | 6.000 | | | | | 3 6 | 3 4 | 94 |

# BILL OF REINFORCING STEEL

| NO. REQ'D. | SIZE | MARK | LOCATION | EPOXY (E) | SHAPE NO. | STIRRUP (S) | SUBSTR. (X) | VARIES (V) | NO. EACH | B FT. IN. | C FT. IN. | D FT. IN. | E FT. IN. | F FT. IN. | H FT. IN. | K FT. IN. | NOMINAL LENGTH FT. IN. | ACTUAL LENGTH FT. IN. | WEIGHT LBS. |
|---|---|---|---|---|---|---|---|---|---|---|---|---|---|---|---|---|---|---|---|
| 16 | 6 | V1 | WING | | 20 | | | V | 2 | 8 7.000 | | | | | | | 8 7 | 8 7 | |
| | | | INCREMENT = | | | | | | | 2 7.000 | | | | | | | 2 7 | 2 7 | 134 |
| | | | 10.250 INCH | | | | | | | | | | | | | | | | |
| 4 | 6 | V2 | WING BRACE | | 20 | | | | | 9 3.000 | | | | | | | 9 3 | 9 3 | 56 |
| 16 | 6 | V3 | WING | | 20 | | | V | 2 | 6 3.000 | | | | | | | 6 3 | 6 3 | |
| | | | INCREMENT = | | | | | | | 2 4.000 | | | | | | | 2 4 | 2 4 | 103 |
| | | | 6.750 INCH | | | | | | | | | | | | | | | | |
| 4 | 6 | V4 | WING BRACE | | 20 | | | | | 6 8.000 | | | | | | | 6 8 | 6 8 | 40 |
| | | | END BT. 4 | | | | | | | | | | | | | | | | |
| 5 | 6 | F41 | WING BRACE | | 23 | | | | | 14.000 | 6 0.000 | 14.000 | 8.500 | 11.125 | 8.500 | 11.125 | 8 4 | 8 3 | 62 |
| 4 | 6 | F42 | DIAPHRAGM | | 21 | | | | | 2 10.625 | 5 0.000 | | | | 2 9.000 | 10.375 | 7 11 | 7 7 | 46 |
| 5 | 6 | F43 | WING BRACE | | 23 | | | | | 14.000 | 4 6.000 | 14.000 | 11.125 | 8.500 | 11.125 | 8.500 | 6 10 | 6 9 | 51 |
| 4 | 6 | F44 | DIAPHRAGM | | 15 | | | | | 2 10.500 | 4 6.000 | | | | 2 9.000 | 10.125 | 7 5 | 7 3 | 44 |
| 4 | 6 | H41 | DIAPHRAGM | E | 20 | | | | | 21 3.000 | | | | | | | 21 3 | 21 3 | 128 |
| 4 | 6 | H42 | DIAPHRAGM | E | 20 | | | | | 9 2.000 | | | | | | | 9 2 | 9 2 | 55 |
| 4 | 6 | H43 | DIAPHRAGM | E | 20 | | | | | 18 0.000 | | | | | | | 18 0 | 18 0 | 108 |
| 8 | 6 | H44 | DIAPHRAGM | | 20 | | | | | 21 3.000 | | | | | | | 21 3 | 21 3 | 255 |
| 8 | 6 | H45 | DIAPHRAGM | | 20 | | | | | 9 2.000 | | | | | | | 9 2 | 9 2 | 110 |
| 8 | 6 | H46 | DIAPHRAGM | | 20 | | | | | 18 0.000 | | | | | | | 18 0 | 18 0 | 216 |
| 1 | 4 | H47 | APP. KEY | E | 20 | | | | | 18 11.000 | | | | | | | 18 11 | 18 11 | 13 |
| 1 | 4 | H48 | APP. KEY | E | 20 | | | | | 9 2.000 | | | | | | | 9 2 | 9 2 | 6 |
| 1 | 4 | H49 | APP. KEY | E | 20 | | | | | 15 5.000 | | | | | | | 15 5 | 15 5 | 10 |
| 46 | 5 | H50 | DIAPHRAGM | E | 20 | | | | | 2 6.000 | | | | | | | 2 6 | 2 6 | 120 |
| 2 | 6 | H51 | WING | E | 20 | | | | | 11 4.000 | | | | | | | 11 4 | 11 4 | 34 |
| 4 | 6 | H52 | WING | | 20 | | | | | 11 4.000 | | | | | | | 11 4 | 11 4 | 68 |
| 2 | 6 | H53 | WING | | 20 | | | | | 11 2.000 | | | | | | | 11 2 | 11 2 | 34 |
| 2 | 6 | H54 | WING | | 20 | | | | | 9 10.000 | | | | | | | 9 10 | 9 10 | 30 |
| 8 | 6 | H55 | WING | | 20 | | | V | 2 | 6 6.000 | | | | | | | 6 6 | 6 6 | |
| | | | INCREMENT = | | | | | | | 2 5.000 | | | | | | | 2 5 | 2 5 | 54 |
| | | | 16.375 INCH | | | | | | | | | | | | | | | | |
| 2 | 6 | H56 | WING | E | 20 | | | | | 11 4.000 | | | | | | | 11 4 | 11 4 | 34 |
| 4 | 6 | H57 | WING | | 20 | | | | | 11 4.000 | | | | | | | 11 4 | 11 4 | 68 |
| 6 | 6 | H58 | WING | | 20 | | | V | 2 | 11 3.000 | | | | | | | 11 3 | 11 3 | |
| | | | INCREMENT = | | | | | | | 9 8.000 | | | | | | | 9 8 | 9 8 | 94 |
| | | | 9.500 INCH | | | | | | | | | | | | | | | | |
| 14 | 6 | H59 | WING | | 20 | | | V | 2 | 7 4.000 | | | | | | | 7 4 | 7 4 | |
| | | | INCREMENT = | | | | | | | 2 5.000 | | | | | | | 2 5 | 2 5 | 103 |
| | | | 9.875 INCH | | | | | | | | | | | | | | | | |
| 8 | 6 | H60 | BEAM STEP | | 20 | | | | | 3 3.000 | | | | | | | 3 3 | 3 3 | 39 |
| 2 | 6 | T41 | WING | | 25 | | | | | 2 1.000 | 9 0.750 | 14.000 | | | 4 0.375 | 8 1.375 | 12 4 | 12 3 | 37 |
| 2 | 6 | T42 | WING | | 25 | | | | | 2 1.000 | 10 7.750 | 19.000 | | | 6 8.875 | 8 2.875 | 14 4 | 14 3 | 43 |
| 96 | 5 | U41 | DIAPHRAGM | E | 10 | S | | | | | 4 0.000 | 2 10.000 | | | | | 10 10 | 10 8 | 1068 |
| 59 | 6 | U42 | DIAPHRAGM | E | 19 | S | | | | 4 0.000 | 5 0.000 | | | | | | 9 0 | 8 10 | 783 |
| 42 | 4 | U43 | APP. KEY | E | 10 | S | | | | | 18.000 | 6.000 | | | | | 3 6 | 3 4 | 94 |

## STIRRUP HOOK DIMENSIONS

GRADES 40 - 50 - 60 KSI

| BAR SIZE | D (IN.) | 90° HOOK: HOOK A OR G | 135° HOOK: HOOK A OR G | 135° HOOK: APPROX. H |
|---|---|---|---|---|
| #4 | 2" | 4-1/2" | 4-1/2" | 3" |
| #5 | 2-1/2" | 6" | 5-1/2" | 3-3/4" |
| #6 | 4-1/2" | 12" | 8" | 4-1/2" |

NOTE: UNLESS OTHERWISE NOTED DIAMETER "D" IS THE SAME FOR ALL BENDS AND HOOKS ON A BAR.

## END HOOK DIMENSIONS

| BAR SIZE | D (IN.) | ALL GRADES 180° HOOKS A OR G | 180° HOOKS J | 90° HOOKS A OR G |
|---|---|---|---|---|
| #3 | 2-1/4" | 5" | 3" | 6" |
| #4 | 3" | 6" | 4" | 8" |
| #5 | 3-3/4" | 7" | 5" | 10" |
| #6 | 4-1/2" | 8" | 6" | 12" |
| #7 | 5-1/4" | 10" | 7" | 14" |
| #8 | 6" | 11" | 8" | 16" |
| #9 | 9-1/2" | 15" | 11-3/4" | 19" |
| #10 | 10-3/4" | 17" | 13-1/4" | 22" |
| #11 | 12" | 19" | 14-3/4" | 2'-0" |
| #14 | 18-1/4" | 2'-3" | 21-3/4" | 2'-7" |

TWO ADDITIONAL #4-H7 & #6-H11 ARE INCLUDED IN THE BAR BILL FOR TESTING.

**NOTE:**
ALL STANDARD HOOKS AND BENDS OTHER THAN 180 DEG. TO BE BENT WITH THE SAME PROCEDURE AS FOR 90 DEG. STD. HOOKS.
HOOKS AND BENDS SHALL BE IN ACCORDANCE WITH THE PROCEDURES AS SHOWN ON THIS SHEET.
E = EPOXY COATED REINFORCEMENT.
S = STIRRUP.
X = BAR IS INCLUDED IN SUBSTRUCTURE QUANTITIES.
V = BAR DIMENSIONS VARY IN EQUAL INCREMENTS BETWEEN DIMENSIONS SHOWN ON THIS LINE AND THE FOLLOWING LINE.
NO. EA. = NUMBER OF BARS OF EACH LENGTH.
NOMINAL LENGTHS ARE BASED ON OUT TO OUT DIMENSIONS SHOWN IN BENDING DIAGRAMS AND ARE LISTED FOR FABRICATOR'S USE (NEAREST INCH).
ACTUAL LENGTHS ARE MEASURED ALONG CENTERLINE BAR TO THE NEAREST INCH.
PAYWEIGHTS ARE BASED ON ACTUAL LENGTHS.
FOUR ANGLE OR CHANNEL SPACERS ARE REQUIRED FOR EACH COLUMN SPIRAL. SPACERS ARE TO BE PLACED ON INSIDE OF SPIRALS. LENGTH AND WEIGHT OF COLUMN SPIRALS DO NOT INCLUDE SPLICES OR SPACERS.
REINFORCING STEEL (GRADE 60) = FY 60,000 PSI.

BENDING DIAGRAMS

DETAILED July 2002
CHECKED July 2002

NOTE: THIS DRAWING IS NOT TO SCALE. FOLLOW DIMENSIONS.

SHEET NO. 29 OF 31

JACKSON COUNTY | A09953

| State | Proj. No. | Sheet No. |
|---|---|---|
| MO | | B170 |

# BILL OF REINFORCING STEEL

| NO. REQ'D. | MARK NO. SIZE MARK | LOCATION | EPOXY (E) | SHAPE NO. | STIRRUP (S) | SUBSTR. (X) | VARIES (V) | NO. EACH | B FT. IN. | C FT. IN. | D FT. IN. | E FT. IN. | F FT. IN. | H FT. IN. | K FT. IN. | NOMINAL LENGTH FT. IN. | ACTUAL LENGTH FT. IN. | WEIGHT LBS. |
|---|---|---|---|---|---|---|---|---|---|---|---|---|---|---|---|---|---|---|
| 16 | 6 V41 | WING | | 20 | | | V | 2 | 6 1.000 | | | | | | | 6 1 | 6 1 | |
| | | INCREMENT = | | | | | | | 2 4.000 | | | | | | | 2 4 | 2 4 | 101 |
| | | 6.375 INCH | | | | | | | | | | | | | | | | |
| 4 | 6 V42 | WING BRACE | | 20 | | | | | 6 6.000 | | | | | | | 6 6 | 6 6 | 39 |
| 16 | 6 V43 | WING | | 20 | | | V | 2 | 8 7.000 | | | | | | | 8 7 | 8 7 | |
| | | INCREMENT = | | | | | | | 2 7.000 | | | | | | | 2 7 | 2 7 | 134 |
| | | 10.250 INCH | | | | | | | | | | | | | | | | |
| 4 | 6 V44 | WING BRACE | | 20 | | | | | 9 3.000 | | | | | | | 9 3 | 9 3 | 56 |
| 358 | 6 S1 | SLAB | E | 20 | | | | | 17 1.000 | | | | | | | 17 1 | 17 1 | 9186 |
| 8 | 6 S2 | SLAB | E | 20 | | | V | 1 | 2 7.000 | | | | | | | 2 7 | 2 7 | |
| | | INCREMENT = | | | | | | | 16 3.000 | | | | | | | 16 3 | 16 3 | 113 |
| | | 23.375 INCH | | | | | | | | | | | | | | | | |
| 10 | 6 S3 | SLAB | E | 20 | | | V | 1 | 2 6.000 | | | | | | | 2 6 | 2 6 | |
| | | INCREMENT = | | | | | | | 16 4.000 | | | | | | | 16 4 | 16 4 | 141 |
| | | 18.500 INCH | | | | | | | | | | | | | | | | |
| 363 | 6 S4 | SLAB | E | 20 | | | | | 8 8.000 | | | | | | | 8 8 | 8 8 | 4725 |
| 4 | 6 S5 | SLAB | E | 20 | | | V | 1 | 3 5.000 | | | | | | | 3 5 | 3 5 | |
| | | INCREMENT = | | | | | | | 7 3.000 | | | | | | | 7 3 | 7 3 | 32 |
| | | 15.375 INCH | | | | | | | | | | | | | | | | |
| 5 | 6 S6 | SLAB | E | 20 | | | V | 1 | 2 11.000 | | | | | | | 2 11 | 2 11 | |
| | | INCREMENT = | | | | | | | 7 6.000 | | | | | | | 7 6 | 7 6 | 39 |
| | | 13.750 INCH | | | | | | | | | | | | | | | | |
| 357 | 6 S7 | SLAB | E | 20 | | | | | 20 2.000 | | | | | | | 20 2 | 20 2 | 10814 |
| 10 | 6 S8 | SLAB | E | 20 | | | V | 1 | 3 6.000 | | | | | | | 3 6 | 3 6 | |
| | | INCREMENT = | | | | | | | 19 0.000 | | | | | | | 19 0 | 19 0 | 169 |
| | | 20.625 INCH | | | | | | | | | | | | | | | | |
| 12 | 6 S9 | SLAB | E | 20 | | | V | 1 | 2 3.000 | | | | | | | 2 3 | 2 3 | |
| | | INCREMENT = | | | | | | | 19 0.000 | | | | | | | 19 0 | 19 0 | 192 |
| | | 18.250 INCH | | | | | | | | | | | | | | | | |
| 195 | 5 S10 | SLAB | E | 20 | | | | | 36 5.000 | | | | | | | 36 5 | 36 5 | 7407 |
| 140 | 6 S11 | SLAB | E | 20 | | | | | 33 0.000 | | | | | | | 33 0 | 33 0 | 6939 |
| 219 | 6 S12 | SLAB | E | 20 | | | | | 17 1.000 | | | | | | | 17 1 | 17 1 | 5619 |
| 5 | 6 S13 | SLAB | E | 20 | | | V | 1 | 2 6.000 | | | | | | | 2 6 | 2 6 | |
| | | INCREMENT = | | | | | | | 15 3.000 | | | | | | | 15 3 | 15 3 | 67 |
| | | 38.250 INCH | | | | | | | | | | | | | | | | |
| 6 | 6 S14 | SLAB | E | 20 | | | V | 1 | 3 0.000 | | | | | | | 3 0 | 3 0 | |
| | | INCREMENT = | | | | | | | 15 8.000 | | | | | | | 15 8 | 15 8 | 84 |
| | | 30.375 INCH | | | | | | | | | | | | | | | | |
| 221 | 6 S15 | SLAB | E | 20 | | | | | 8 8.000 | | | | | | | 8 8 | 8 8 | 2877 |
| 1 | 6 S16 | SLAB | E | 20 | | | | | 7 11.000 | | | | | | | 7 11 | 7 11 | 12 |
| 3 | 6 S17 | SLAB | E | 20 | | | V | 1 | 3 1.000 | | | | | | | 3 1 | 3 1 | |
| | | INCREMENT = | | | | | | | 8 1.000 | | | | | | | 8 1 | 8 1 | 25 |
| | | 30.000 INCH | | | | | | | | | | | | | | | | |
| 218 | 6 S18 | SLAB | E | 20 | | | | | 20 2.000 | | | | | | | 20 2 | 20 2 | 6603 |
| 6 | 6 S19 | SLAB | E | 20 | | | V | 1 | 2 10.000 | | | | | | | 2 10 | 2 10 | |
| | | INCREMENT = | | | | | | | 18 8.000 | | | | | | | 18 8 | 18 8 | 97 |
| | | 38.000 INCH | | | | | | | | | | | | | | | | |
| 7 | 6 S20 | SLAB | E | 20 | | | V | 1 | 3 9.000 | | | | | | | 3 9 | 3 9 | |
| | | INCREMENT = | | | | | | | 18 8.000 | | | | | | | 18 8 | 18 8 | 118 |
| | | 29.875 INCH | | | | | | | | | | | | | | | | |
| 270 | 6 S21 | SLAB | E | 20 | | | | | 36 3.000 | | | | | | | 36 3 | 36 3 | 14701 |
| 1 | 6 S22 | SLAB | E | 20 | | | | | 4 9.000 | | | | | | | 4 9 | 4 9 | 7 |
| | | BARRIER CURB | | | | | | | | | | | | | | | | |

# BILL OF REINFORCING STEEL

| NO. REQ'D. | MARK NO. SIZE MARK | LOCATION | EPOXY (E) | SHAPE NO. | STIRRUP (S) | SUBSTR. (X) | VARIES (V) | NO. EACH | B FT. IN. | C FT. IN. | D FT. IN. | E FT. IN. | F FT. IN. | H FT. IN. | K FT. IN. | NOMINAL LENGTH FT. IN. | ACTUAL LENGTH FT. IN. | WEIGHT LBS. |
|---|---|---|---|---|---|---|---|---|---|---|---|---|---|---|---|---|---|---|
| 24 | 5 C1 | SLIP FORM | E | 20 | | | | | 10 0.000 | | | | | | | 10 0 | 10 0 | 250 |
| 8 | 5 C2 | SLIP FORM | E | 20 | | | | | 12 0.000 | | | | | | | 12 0 | 12 0 | 100 |
| 8 | 5 C3 | SLIP FORM | E | 20 | | | | | 16 0.000 | | | | | | | 16 0 | 16 0 | 134 |
| 8 | 5 C4 | SLIP FORM | E | 20 | | | | | 9 0.000 | | | | | | | 9 0 | 9 0 | 75 |
| 106 | 5 K1 | BARRIER CURB | E | 19 | S | | | | 2 5.000 | 5.125 | | | | | | 2 10 | 2 9 | 304 |
| 106 | 5 K2 | BARRIER CURB | E | 14 | S | | | | 5.125 | 11.125 | 18.000 | | | 2.000 | 17.875 | 2 10 | 2 9 | 304 |
| 62 | 5 K3 | BARRIER CURB | E | 27 | S | | | | 2 5.875 | 5.125 | 12.000 | 20.000 | | 9.875 | 6.875 | 5 7 | 5 5 | 350 |
| 44 | 5 K4 | BARRIER CURB | E | 7 | | | | | 2 5.875 | 6.000 | | | | | | 5 2 | 5 2 | 237 |
| 4 | 5 K5 | BARRIER CURB | E | 25 | S | | | | 20.000 | 6.750 | 4.375 | | | 5.500 | 4.000 | 2 7 | 2 6 | 10 |
| 4 | 5 K6 | BARRIER CURB | E | 25 | S | | | | 20.000 | 7.875 | 4.375 | | | 6.500 | 4.500 | 2 8 | 2 8 | 11 |
| 4 | 5 K7 | BARRIER CURB | E | 25 | S | | | | 20.000 | 9.625 | 4.375 | | | 7.875 | 5.500 | 2 10 | 2 9 | 11 |
| 4 | 5 K8 | BARRIER CURB | E | 25 | S | | | | 20.000 | 11.250 | 4.375 | | | 9.250 | 6.500 | 3 0 | 2 11 | 12 |
| 48 | 5 K9 | BARRIER CURB | E | 20 | | | | | 5 7.000 | | | | | | | 5 7 | 5 7 | 280 |
| 10 | 4 K10 | BARRIER CURB | E | 20 | | | | | 9 7.000 | | | | | | | 9 7 | 9 7 | 64 |
| 4 | 5 K11 | BARRIER CURB | E | 8 | | | | | 2 2.125 | | | | | 2 2.000 | 2.375 | 4 4 | 4 4 | 18 |
| 4 | 5 K12 | BARRIER CURB | E | 27 | S | | | | 17.000 | 5.125 | 12.000 | 7.125 | 12.000 | 9.875 | 6.875 | 4 5 | 4 2 | 17 |
| 10 | 4 K13 | BARRIER CURB | E | 20 | | | | | 9 3.000 | | | | | | | 9 3 | 9 3 | 62 |
| 10 | 4 K14 | BARRIER CURB | E | 20 | | | | | 9 3.000 | | | | | | | 9 3 | 9 3 | 62 |
| 10 | 4 K15 | BARRIER CURB | E | 20 | | | | | 9 9.000 | | | | | | | 9 9 | 9 9 | 65 |
| 336 | 5 R1 | BARRIER CURB | E | 19 | S | | | | 2 6.000 | 3.500 | | | | | | 2 10 | 2 8 | 935 |
| 336 | 5 R2 | BARRIER CURB | E | 15 | S | | | | 2 6.125 | 3.500 | | | | 2 6.000 | 3.000 | 2 10 | 2 9 | 964 |
| 336 | 5 R3 | BARRIER CURB | E | 19 | S | | | | 17.000 | 6.000 | | | | | | 0 23 | 0 22 | 642 |
| 336 | 5 R4 | BARRIER CURB | E | 27 | S | | | | | 6.000 | 11.250 | 7.000 | 12.000 | 9.250 | 6.375 | 3 0 | 2 10 | 993 |
| 30 | 5 R5 | BARRIER CURB | E | 20 | | | | | 11 9.000 | | | | | | | 11 9 | 11 9 | 368 |
| 28 | 5 R6 | BARRIER CURB | E | 20 | | | | | 15 9.000 | | | | | | | 15 9 | 15 9 | 460 |
| 14 | 5 R7 | BARRIER CURB | E | 20 | | | | | 32 8.000 | | | | | | | 32 8 | 32 8 | 477 |
| 7 | 5 R8 | BARRIER CURB | E | 20 | | | | | 36 1.000 | | | | | | | 36 1 | 36 1 | 263 |
| 7 | 5 R9 | BARRIER CURB | E | 20 | | | | | 36 5.000 | | | | | | | 36 5 | 36 5 | 266 |
| 7 | 5 R10 | BARRIER CURB | E | 20 | | | | | 36 5.000 | | | | | | | 36 5 | 36 5 | 266 |
| 7 | 5 R11 | BARRIER CURB | E | 20 | | | | | 36 0.000 | | | | | | | 36 0 | 36 0 | 263 |
| | | TOTALS | | | | | | | | | | | | | | | | |
| | 4 | | E | | | | | | | | | | | | | | | 519 |
| | 5 | | E | | | | | | | | | | | | | | | 17598 |
| | 6 | | | | | | | | | | | | | | | | | 3579 |
| | 6 | | E | | | | | | | | | | | | | | | 64876 |
| | | TOTAL | | | | | | | | | | | | | | | | 3579 |
| | | TOTAL | E | | | | | | | | | | | | | | | 82993 |
| | | Slab on | | | | | | | | | | | | | | | | |
| | | Girder | | | | | | | | | | | | | | | | |
| | 4 | | E | | | | | | | | | | | | | | | 266 |
| | 5 | | E | | | | | | | | | | | | | | | 9588 |
| | 6 | | | | | | | | | | | | | | | | | 3405 |
| | 6 | | E | | | | | | | | | | | | | | | 64876 |
| | | TOTAL | | | | | | | | | | | | | | | | 78135 |
| | | Reinforcing | | | | | | | | | | | | | | | | |
| | | Steel | | | | | | | | | | | | | | | | |

90° STIRRUP 135° STIRRUP

| STIRRUP HOOK DIMENSIONS | | | | |
|---|---|---|---|---|
| GRADES 40 - 50 - 60 KSI | | | | |
| BAR SIZE | D (IN.) | 90° HOOK: HOOK A OR G | 135° HOOK: HOOK A OR G | 135° HOOK: APPROX. H |
| #4 | 2" | 4-1/2" | 4-1/2" | 3" |
| #5 | 2-1/2" | 6" | 5-1/2" | 3-3/4" |
| #6 | 4-1/2" | 12" | 8" | 4-1/2" |

NOTE: UNLESS OTHERWISE NOTED DIAMETER "D" IS THE SAME FOR ALL BENDS AND HOOKS ON A BAR.

| END HOOK DIMENSIONS | | | | |
|---|---|---|---|---|
| | | ALL GRADES | | |
| BAR SIZE | D (IN.) | 180° HOOKS: A OR G | 180° HOOKS: J | 90° HOOKS: A OR G |
| #3 | 2-1/4" | 5" | 3" | 6" |
| #4 | 3" | 6" | 4" | 8" |
| #5 | 3-3/4" | 7" | 5" | 10" |
| #6 | 4-1/2" | 8" | 6" | 12" |
| #7 | 5-1/4" | 10" | 7" | 14" |
| #8 | 6" | 11" | 8" | 16" |
| #9 | 9-1/2" | 15" | 11-3/4" | 19" |
| #10 | 10-3/4" | 17" | 13-1/4" | 22" |
| #11 | 12" | 19" | 14-3/4" | 2'-0" |
| #14 | 18-1/4" | 2'-3" | 21-3/4" | 2'-7" |

TWO ADDITIONAL #5-R5 ARE INCLUDED IN THE BAR BILL FOR TESTING.

**NOTE:**
ALL STANDARD HOOKS AND BENDS OTHER THAN 180 DEG. TO BE BENT WITH THE SAME PROCEDURE AS FOR 90 DEG. STD. HOOKS.
HOOKS AND BENDS SHALL BE IN ACCORDANCE WITH THE PROCEDURES AS SHOWN ON THIS SHEET.
E = EPOXY COATED REINFORCEMENT.
S = STIRRUP.
X = BAR IS INCLUDED IN SUBSTRUCTURE QUANTITIES.
V = BAR DIMENSIONS VARY IN EQUAL INCREMENTS BETWEEN DIMENSIONS SHOWN ON THIS LINE AND THE FOLLOWING LINE.
NO. EA. = NUMBER OF BARS OF EACH LENGTH.
NOMINAL LENGTHS ARE BASED ON OUT TO OUT DIMENSIONS SHOWN IN BENDING DIAGRAMS AND ARE LISTED FOR FABRICATOR'S USE (NEAREST INCH).
ACTUAL LENGTHS ARE MEASURED ALONG CENTERLINE BAR TO THE NEAREST INCH.
PAYWEIGHTS ARE BASED ON ACTUAL LENGTHS.
FOUR ANGLE OR CHANNEL SPACERS ARE REQUIRED FOR EACH COLUMN SPIRAL. SPACERS ARE TO BE PLACED ON INSIDE OF SPIRALS. LENGTH AND WEIGHT OF COLUMN SPIRALS DO NOT INCLUDE SPLICES OR SPACERS.
REINFORCING STEEL (GRADE 60) = FY 60,000 PSI.

(SHAPE 35 SHALL BE A DEFORMED OR PLAIN SPIRAL BAR OR WIRE.)

BENDING DIAGRAMS

STATE OF MISSOURI
GREGORY E. SANDERS
NUMBER E-2000162167
REGISTERED PROFESSIONAL ENGINEER

DATE 8-22-02

DETAILED July 2002
CHECKED July 2002

NOTE: THIS DRAWING IS NOT TO SCALE. FOLLOW DIMENSIONS.



JACKSON COUNTY

A09953

barbill_i June 2002

# BILL OF REINFORCING STEEL

| NO. REQ'D. | MARK NO. SIZE | MARK NO. MARK | LOCATION | EPOXY (E) | SHAPE NO. | STIRRUP (S) | SUBSTR. (X) | VARIES (V) | NO. EACH | DIMENSIONS B FT. | B IN. | C FT. | C IN. | D FT. | D IN. | E FT. | E IN. | F FT. | F IN. | H FT. | H IN. | K FT. | K IN. | NOMINAL LENGTH FT. | NOMINAL LENGTH IN. | ACTUAL LENGTH FT. | ACTUAL LENGTH IN. | WEIGHT LBS. |
|---|---|---|---|---|---|---|---|---|---|---|---|---|---|---|---|---|---|---|---|---|---|---|---|---|---|---|---|---|
| | | | (Bridges) | | | | | | | | | | | | | | | | | | | | | | | | | |
| | 6 | | | | | | | | | | | | | | | | | | | | | | | | | | | 174 |
| | | | TOTAL | | | | | | | | | | | | | | | | | | | | | | | | | 174 |
| | | | Safety Barrier Curb | | | | | | | | | | | | | | | | | | | | | | | | | |
| | 4 | | | E | | | | | | | | | | | | | | | | | | | | | | | | 253 |
| | 5 | | | E | | | | | | | | | | | | | | | | | | | | | | | | 7451 |
| | | | TOTAL | | | | | | | | | | | | | | | | | | | | | | | | | 7704 |
| | | | Slip Form Option | | | | | | | | | | | | | | | | | | | | | | | | | |
| | 5 | | | E | | | | | | | | | | | | | | | | | | | | | | | | 559 |
| | | | TOTAL | | | | | | | | | | | | | | | | | | | | | | | | | 559 |

# BILL OF REINFORCING STEEL

| NO. REQ'D. | MARK NO. SIZE | MARK NO. MARK | LOCATION | EPOXY (E) | SHAPE NO. | STIRRUP (S) | SUBSTR. (X) | VARIES (V) | NO. EACH | DIMENSIONS B FT. | B IN. | C FT. | C IN. | D FT. | D IN. | E FT. | E IN. | F FT. | F IN. | H FT. | H IN. | K FT. | K IN. | NOMINAL LENGTH FT. | NOMINAL LENGTH IN. | ACTUAL LENGTH FT. | ACTUAL LENGTH IN. | WEIGHT LBS. |
|---|---|---|---|---|---|---|---|---|---|---|---|---|---|---|---|---|---|---|---|---|---|---|---|---|---|---|---|---|

| State | Proj. No. | Sheet No. |
|---|---|---|
| MO | | B171 |

SHAPE 6 SHAPE 7 SHAPE 8

SHAPE 9 SHAPE 10 SHAPE 11

SHAPE 12 SHAPE 13 SHAPE 14

SHAPE 15 SHAPE 16 SHAPE 17 SHAPE 18 SHAPE 20

SHAPE 19 SHAPE 21 SPOT WELD AASHTO M32 SIZE W5 WIRE (TYP.)

SHAPE 23 SHAPE 24 SHAPE 22

SHAPE 25 SHAPE 26 SHAPE 27

SHAPE 28 SHAPE 29 SHAPE 31

SHAPE 30 SHAPE 32

SHAPE 33

SHAPE 36 SHAPE 35 SHAPE 34 (SHAPE 35 SHALL BE A DEFORMED OR PLAIN SPIRAL BAR OR WIRE.)

BENDING DIAGRAMS

6d FOR #4 AND #5. 12d FOR #6

90° STIRRUP 135° STIRRUP

DETAILED July 2002
CHECKED July 2002

## STIRRUP HOOK DIMENSIONS

GRADES 40 – 50 – 60 KSI

| BAR SIZE | D (IN.) | 90° HOOK HOOK A OR G | 135° HOOK HOOK A OR G | 135° HOOK APPROX. H |
|---|---|---|---|---|
| #4 | 2" | 4-1/2" | 4-1/2" | 3" |
| #5 | 2-1/2" | 6" | 5-1/2" | 3-3/4" |
| #6 | 4-1/2" | 12" | 8" | 4-1/2" |

NOTE: UNLESS OTHERWISE NOTED DIAMETER "D" IS THE SAME FOR ALL BENDS AND HOOKS ON A BAR.

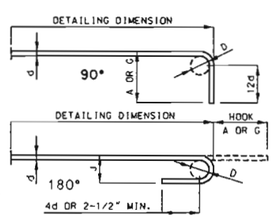


## END HOOK DIMENSIONS

| BAR SIZE | D (IN.) | ALL GRADES 180° HOOKS A OR G | 180° HOOKS J | 90° HOOKS A OR G |
|---|---|---|---|---|
| #3 | 2-1/4" | 5" | 3" | 6" |
| #4 | 3" | 6" | 4" | 8" |
| #5 | 3-3/4" | 7" | 5" | 10" |
| #6 | 4-1/2" | 8" | 6" | 12" |
| #7 | 5-1/4" | 10" | 7" | 14" |
| #8 | 6" | 11" | 8" | 16" |
| #9 | 9-1/2" | 15" | 11-3/4" | 19" |
| #10 | 10-3/4" | 17" | 13-1/4" | 22" |
| #11 | 12" | 19" | 14-3/4" | 2'-0" |
| #14 | 18-1/4" | 2'-3" | 21-3/4" | 2'-7" |

NOTE:
ALL STANDARD HOOKS AND BENDS OTHER THAN 180 DEG. TO BE BENT WITH THE SAME PROCEDURE AS FOR 90 DEG. STD. HOOKS.
HOOKS AND BENDS SHALL BE IN ACCORDANCE WITH THE PROCEDURES AS SHOWN ON THIS SHEET.
E = EPOXY COATED REINFORCEMENT.
S = STIRRUP.
X = BAR IS INCLUDED IN SUBSTRUCTURE QUANTITIES.
V = BAR DIMENSIONS VARY IN EQUAL INCREMENTS BETWEEN DIMENSIONS SHOWN ON THIS LINE AND THE FOLLOWING LINE.
NO. EA. = NUMBER OF BARS OF EACH LENGTH.
NOMINAL LENGTHS ARE BASED ON OUT TO OUT DIMENSIONS SHOWN IN BENDING DIAGRAMS AND ARE LISTED FOR FABRICATOR'S USE (NEAREST INCH).
ACTUAL LENGTHS ARE MEASURED ALONG CENTERLINE BAR TO THE NEAREST INCH.
PAYWEIGHTS ARE BASED ON ACTUAL LENGTHS.
FOUR ANGLE OR CHANNEL SPACERS ARE REQUIRED FOR EACH COLUMN SPIRAL. SPACERS ARE TO BE PLACED ON INSIDE OF SPIRALS. LENGTH AND WEIGHT OF COLUMN SPIRALS DO NOT INCLUDE SPLICES OR SPACERS.
REINFORCING STEEL (GRADE 60) = FY 60,000 PSI.

STATE OF MISSOURI GREGORY E. SANDERS NUMBER E-2000162187 REGISTERED PROFESSIONAL ENGINEER

DATE 8-22-02

NOTE: THIS DRAWING IS NOT TO SCALE. FOLLOW DIMENSIONS.

SHEET NO. 31 OF 31

JACKSON COUNTY A09953

T:\tr-proj\houchg\j400412\a09953\a09953_031.dgn 11:13:12 AM 08.22.2002

# MISSOURI HIGHWAY AND TRANSPORTATION COMMISSION

| State | Proj. No. | Sheet No. |
|---|---|---|
| MO | | B105 |
| SEC/SUR 19 | TWP 49N | RGE 32W |

## U.I.P. (76'-94'-67'-67'-94'-76') CONTINUOUS CONCRETE BOX GIRDER SPANS

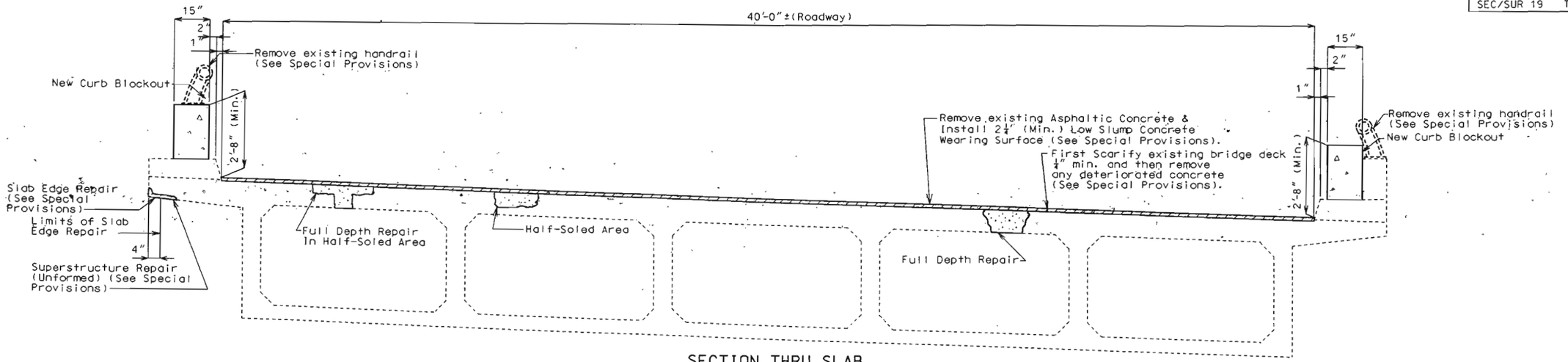


## SECTION THRU SLAB

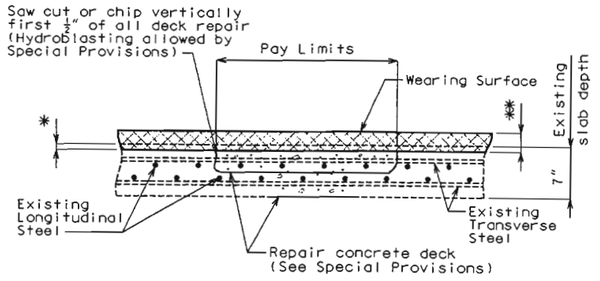


* First Scarify existing bridge deck ¼" min. and then remove any deteriorated concrete. (See Special Provisions)

** 2¼" (min.) Low Slump Concrete Wearing Surface

### HALF-SOLED AREA

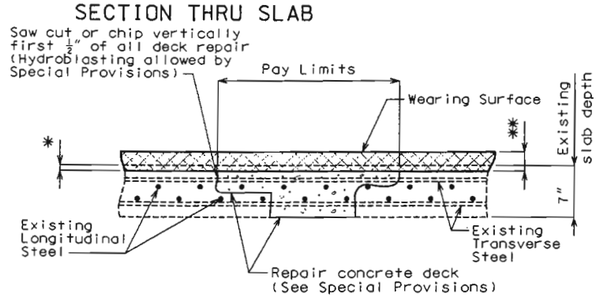


* First Scarify existing bridge deck ¼" min. and then remove any deteriorated concrete. (See Special Provisions)

** 2¼" (min.) Low Slump Concrete Wearing Surface

### FULL DEPTH REPAIR IN HALF-SOLED AREA

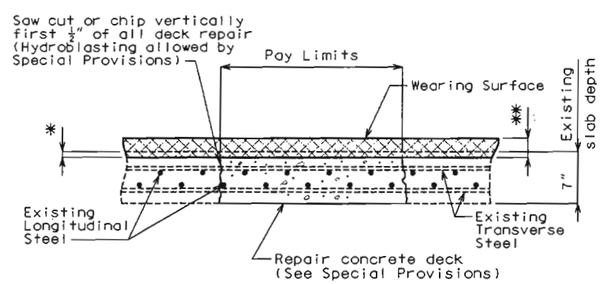


* First Scarify existing bridge deck ¼" min. and then remove any deteriorated concrete. (See Special Provisions)

** 2¼" (min.) Low Slump Concrete Wearing Surface

### FULL DEPTH REPAIR

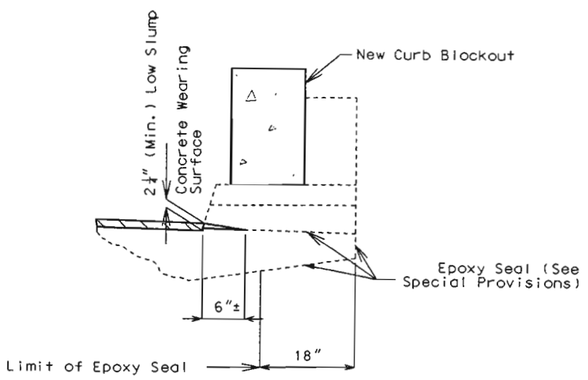


### TYPICAL SECTION THRU CURB OUTLET

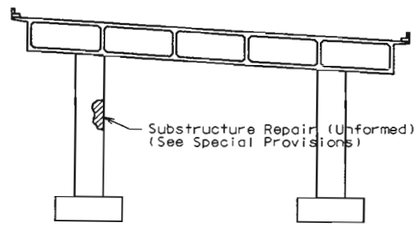


### DETAIL OF INTERMEDIATE BENT SHOWING SUBSTRUCTURE REPAIR AT BENT NOS. 5 & 6

STATE OF MISSOURI
GREGORY E. SANDERS
NUMBER E-2000182187
DATE 8-22-02

Note: For General Notes & Quantities, see sheet no. 2.

REPAIRS TO BRIDGE OVER I-70 & RAMPS "G", "H" & "F"

STATE ROAD FROM RTE. 350 NORTH TO RTE. 40

ABOUT 0.5 MILE SOUTH OF RTE. 40

PROJECT NO. STA. 377+93.16± (match existing)

JOB NO . J4I0712 RTE. I-435 (NBL)

JACKSON COUNTY Date: / /

| | |
|---|---|
| STD. 609.00 | |
| STD. 706.35 | |
| A09933 | REV. |

Designed Mar. 2002
Detailed Mar. 2002
Checked July 2002

Note: This drawing is not to scale. Follow dimensions.



T:\br-proj\robinc1\Misc-A09932\a09933_000front.dgn 9:29:57 AM 08/20/2002

| State | Proj. No. | Sheet No. |
|---|---|---|
| MO | | B106 |

## ESTIMATED QUANTITIES

| ITEM | | TOTAL |
|---|---|---|
| Asphalt Removal (Bridges) | sq. ft. | 18,990 |
| Replacement of Expansion Device and Adjacent Concrete | lin. ft. | 80 |
| Removal of Existing Bridge Rails | lin. ft. | 994 |
| Bridge Approach Slab (Bridge). | sq. yd. | 228 |
| Substructure Repair (Unformed) | sq. ft. | 100 |
| Superstructure Repair (Unformed) | sq. ft. | 150 |
| Protective Coating for Concrete Bents and Concrete Piers under Expansion Devices | lump sum | 1 |
| Curb Blockout | lin. ft. | 1023 |
| Repairing Concrete Deck (Half-Soling) | sq. ft. | 3600 |
| Full Depth Repair | sq. ft. | 600 |
| Slab Edge Repair (Bridges) | lin. ft. | 150 |
| Low Slump Concrete Wearing Surface | sq. yd. | 2110 |
| Strip Seal Expansion Joint System | lin. ft. | 80 |
| | | |
| | | |
| | | |

Notes:

Payment for the removal and replacement of any end posts shall be included in contract unit price for Curb Blockout per lin. ft.

Removal of concrete & reinforcing at End Bent Nos. 1 and 7 shall be completely covered in the contract unit price for Replacement of Expansion Device and Adjacent Concrete per lin. ft. (See Special Provisions).

All concrete & reinforcing required for replacement of backwall, curbs and parapets necessary for placement of strip seal expansion devices at End Bent Nos. 1 & 7 shall be completely covered in the contract unit price for Replacement of Expansion Device and Adjacent Concrete per lin. ft. (See Special Provisions).

Removal of existing Bridge Approach Slabs shall be considered a Roadway Item.

## General Notes:

Design Specifications:
AASHTO - 1996 and Interims thru 2000

Design Unit Stresses:
Class B-1 Concrete (Curb Blockout, Substructure Repair and Deck Repair) f'c = 4,000 psi
Reinforcing Steel (Grade 60, Epoxy Coated) fy = 60,000 psi

Joint Filler:
All joint filler shall meet the requirements of Section 1057.2.4 of the Missouri Standard Specifications, except as noted.

Reinforcing Steel:

Minimum clearance to reinforcing steel shall be 1-1/2", unless otherwise shown.

Bars bonded in old concrete not removed shall be cleanly stripped and embedded into new concrete where possible. If length is available, old bars shall extend into new concrete at least 40 diameters for smooth bars and 30 diameters for deformed bars, unless otherwise noted.

Traffic:
See Roadway plans for traffic control during construction. Bridge work to be performed in 3 stages as shown on sheet no. 3.

Curb Blockouts:
Measurement of Curb Blockout is to the nearest linear foot, measured along outside of slab for left and right curb blockouts. For limits of Curb Blockout, see sheet nos. 9 and 10.

All exposed edges of curb blockout shall have $\frac{1}{2}$" radius or $\frac{1}{8}$" bevel unless otherwise shown.

Payment for concrete, reinforcing steel, resin anchors, and any other work incidental to the Curb Blockout, complete-in-place, shall be included in the contract unit price for Curb Blockout per linear foot.

Cost of any concrete curb and parapet repair shall be considered completely covered in the contract unit price for Curb Blockout.

All reinforcement shall be epoxy coated.

Existing handrail shall be removed and will be considered the property of the contractor.

Resin Anchors:

The contractor shall use one of the resin anchor systems listed in the Job Special Provisions. These anchor systems shall be installed according to the manufacturer's specifications, except as modified by the Job Special Provisions.

Cost of furnishing and installing the anchor system complete in place shall be included in the contract unit price for Curb Blockout.

The $\frac{3}{4}$" diameter resin anchor systems shall have a minimum ultimate pullout strength of 15,500 lbs. in concrete with f'c = 4,000 psi. (See Special Provisions).

An epoxy coated #5 Grade 60 reinforcing bar shall be substituted for the $\frac{3}{4}$"Ø threaded rod stud. For shape and length of reinforcing bar, see sheet nos. 8 and 13 thru 15.

Miscellaneous:
Outline of old work is indicated by dashed lines. Heavy lines indicate new work.

Contractor shall verify all dimensions in field before ordering new material.

Roadway surfacing adjacent to bridge ends to match bridge overlay.

In order to maintain grade and a minimum thickness of overlay as shown on plans, it may be necessary to use additional quantities of overlay at various locations throughout the structure. No payment will be allowed for additional labor, materials or equipment for variations in thickness of overlay.

Contractor shall verify that bottom slab access doors at bottom of box girders and bottom of slab drains are in working condition and that work in this contract does not impair their function (see original plans for details). Cost shall be considered incidental to other pay items.

STATE OF MISSOURI
GREGORY E. SANDERS
NUMBER E-2000016167
ENGINEER
DATE 8-22-02

Detailed Mar. 2002
Checked July 2002

Note: This drawing is not to scale. Follow dimensions.



JACKSON COUNTY A09933 REV.

T:\br-projrobinc1\Misc-A09932\a09933_000misc.dgn 10:30:35 AM 08/20/2002

| State | Proj. No. | Sheet No. |
|---|---|---|
| MO | | B107 |

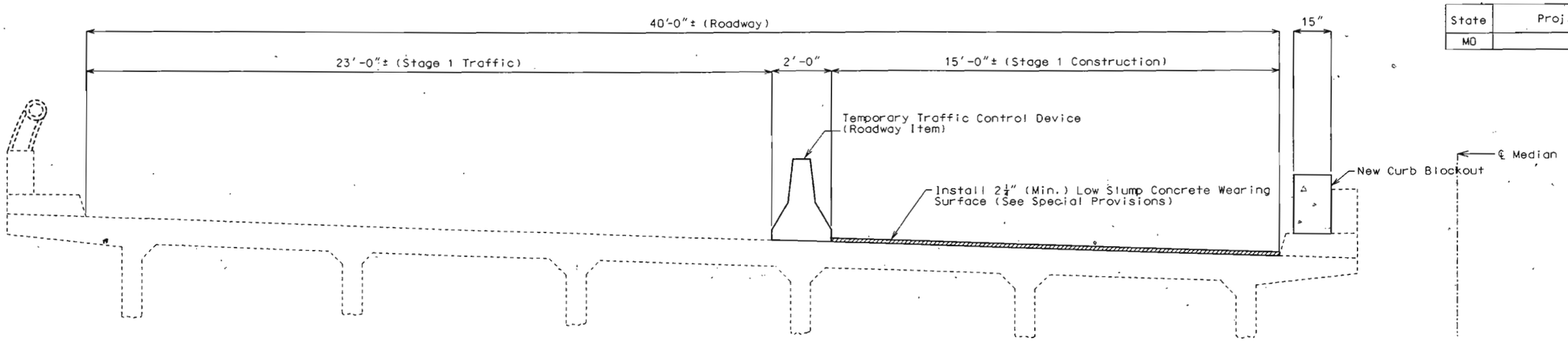


STAGE 1 CONSTRUCTION

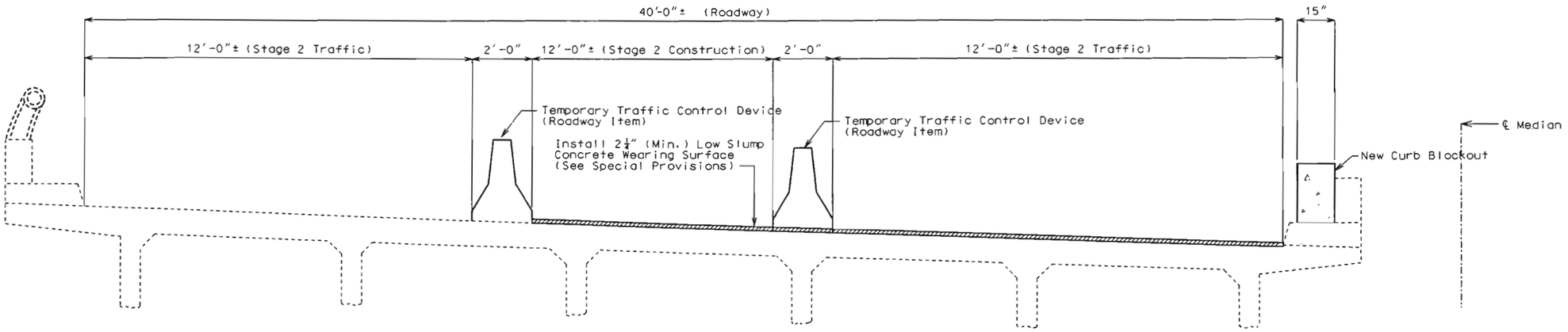


STAGE 2 CONSTRUCTION

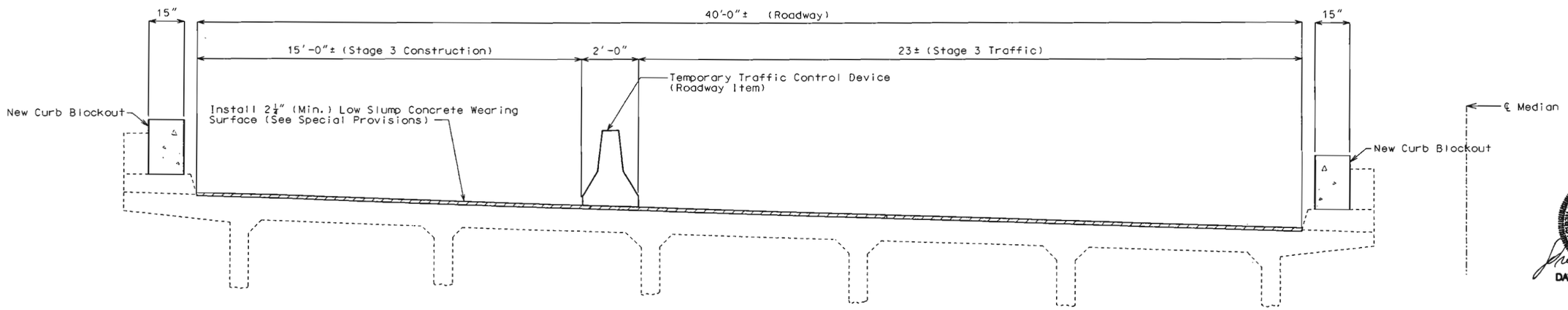


STATE OF MISSOURI
GREGORY E. SANDERS
NUMBER E-2000162167
REGISTERED PROFESSIONAL ENGINEER
DATE 6-22-02

STAGE 3 CONSTRUCTION

Detailed Mar. 2002
Checked July 2002

Note: This drawing is not to scale. Follow dimensions.



JACKSON COUNTY A09933

REV.

T:\br-proj\robinc1\Misc-A09932\a09933_000stage.dgn 9:31:22 AM 08/20/2002

| State | Proj. No. | Sheet No. |
|---|---|---|
| MO | | B108 |

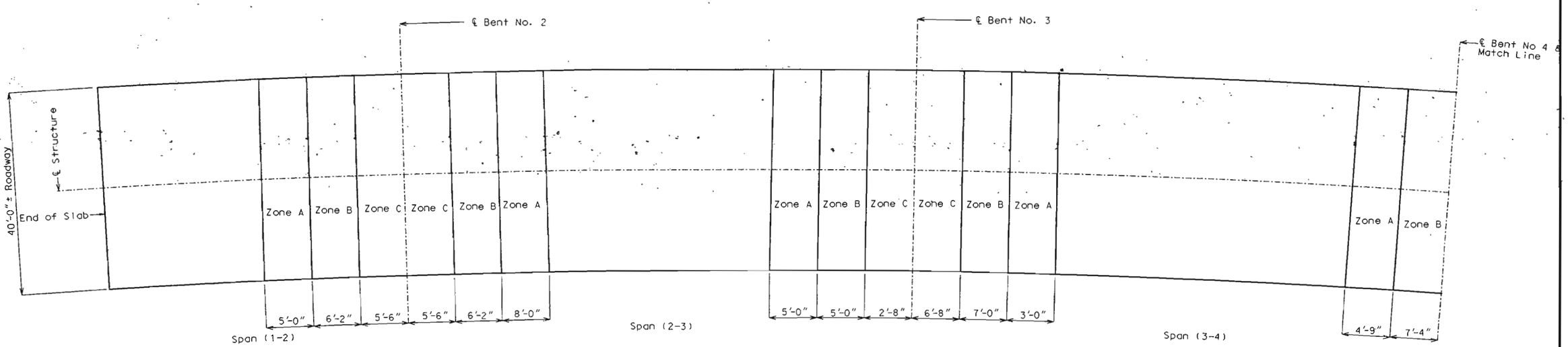


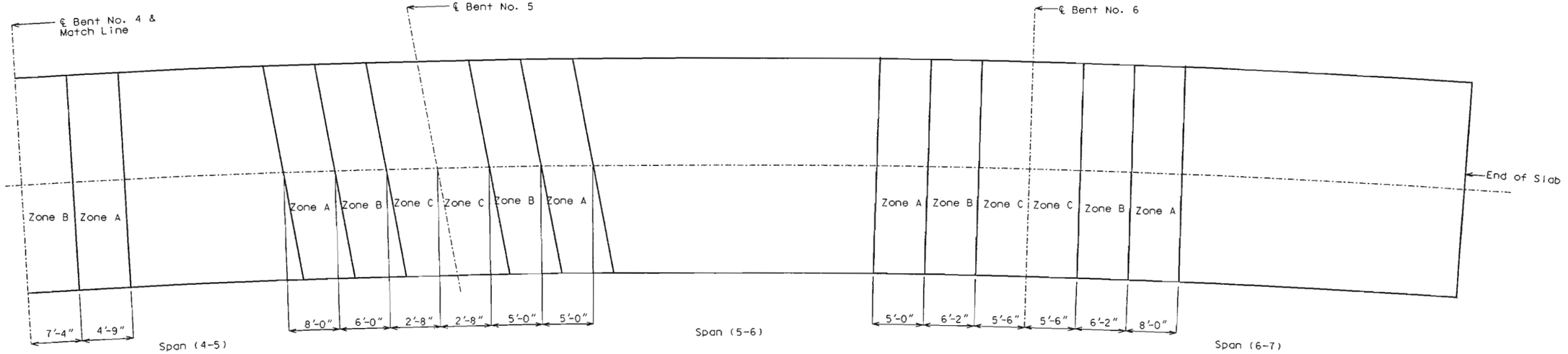


## PLAN OF SLAB SHOWING SPECIAL REPAIR ZONES

Note: Zones with the same letter designation may be repaired at the same time. Sequence of repairs follows Zone A. Zone B then Zone C.
Any repair in the remainder of the bridge that is within 42" of Zone A shall be completed before removing old concrete in Zone A.

STATE OF MISSOURI
GREGORY E. SANDERS
NUMBER E-2000162187
REGISTERED PROFESSIONAL ENGINEER
DATE 8-22-02

Detailed Mar. 2002
Checked July 2002

Note: This drawing is not to scale. Follow dimensions.



JACKSON COUNTY A09933

REV.

T:\br-proj\rcbinc1\Misc-A09932\a09933_000zone.dgn 09:31:45 AM 08/20/2002

| State | Proj. No. | Sheet No. |
|---|---|---|
| MO | | B109 |

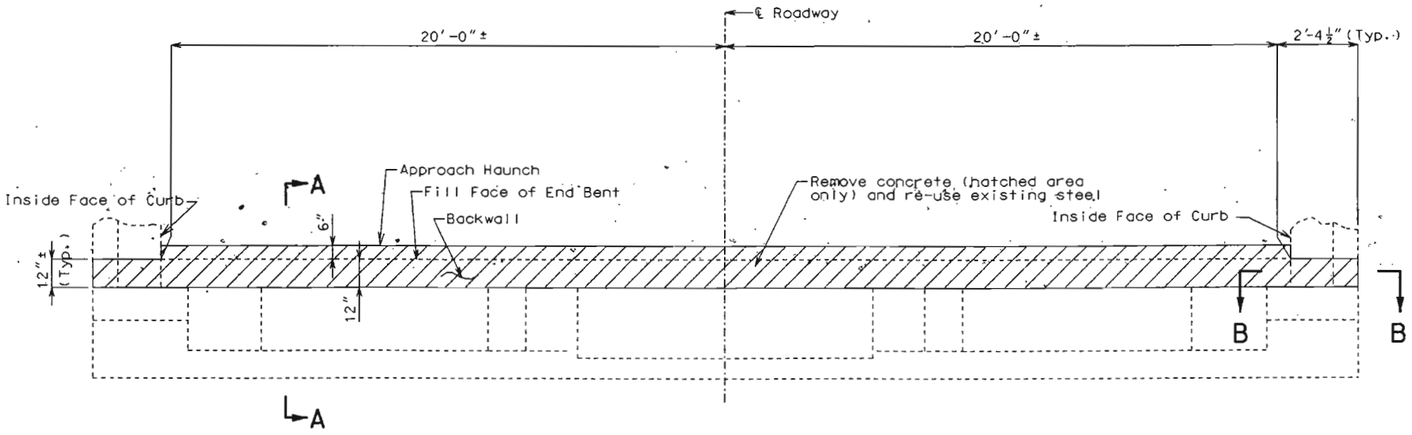


PART PLAN OF END BENT SHOWING EXISTING CONCRETE REMOVAL

(Construction staging is not shown, but shall be consistent with that shown on sheet no. 3)

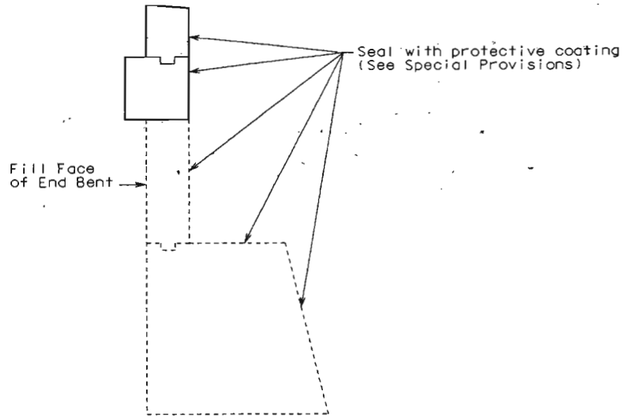


SECTION THRU END BENT
SHOWING PROTECTIVE COATING LIMITS

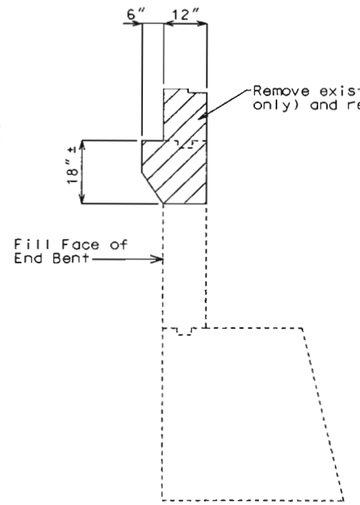


SECTION A-A
(SHOWING EXISTING CONCRETE REMOVAL)

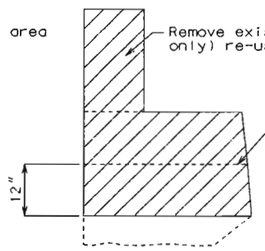


SECTION B-B
(SHOWING EXISTING CONCRETE REMOVAL)

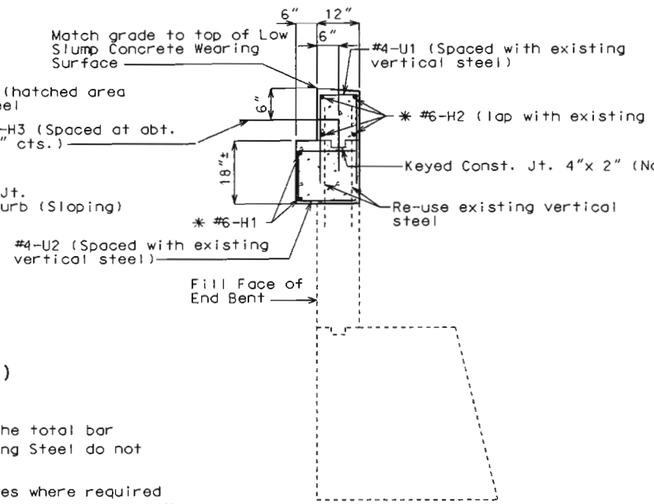


SECTION A-A
(SHOWING CONCRETE REPLACEMENT)

Note: For expansion device placement in backwall, see sheet nos. 6 & 7.

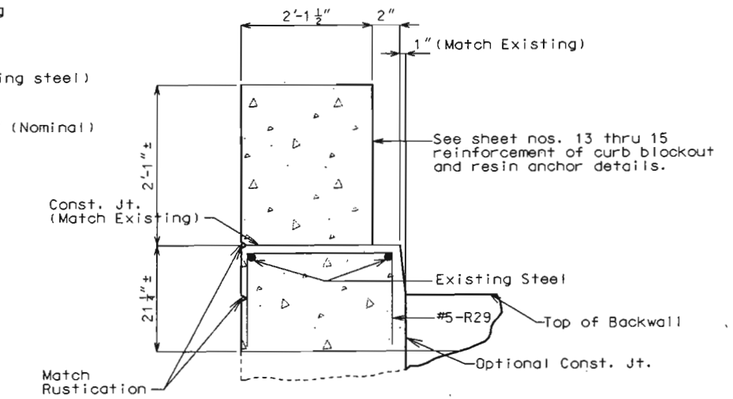


SECTION B-B
(SHOWING CONCRETE REPLACEMENT)

* The H1 and H2 bars shall be segmented bars. the total bar lengths for H-bars shown in Bill of Reinforcing Steel do not allow for staging.

The contractor shall use mechanical bar splices where required for placement of #6-H1 and H2 bars and actual bar segment lengths will be determined based upon manufacturers recommendations of installation and stage construction.

The cost of furnishing and installing the bar splices shall be included in the contract unit price for other items.

See Job Special Provisions for additional requirements of mechanical bar splices. Mechanical bar splices for epoxy coated bars shall be epoxy coated.

Notes: Concrete for replacement shall be Class B-1.
For details of strip seal expansion device replacement, see sheet nos. 6 and 7.

Payment for removal and replacement of curb and parapets shall be completely covered in the contract unit price for Replacement of Expansion Device and Ajacent Concrete (See Special Provisions).

All new reinforcing steel shall be epoxy coated.

STATE OF MISSOURI
GREGORY E. SANDERS
NUMBER E-2000162187
REGISTERED ENGINEER

DATE 8-22-02

# TYPICAL DETAILS FOR END BENT NOS. 1 & 7

Detailed Mar. 2002
Checked July 2002

Note: This drawing is not to scale. Follow dimensions.



JACKSON COUNTY A09933

REV.

T:\tr-proj\robincl\Misc-A09932\a09933_000backw.dgn 09:29:01 AM 08/20/2002

| State | Proj. No. | Sheet No. |
|---|---|---|
| MO | ° | B110 |

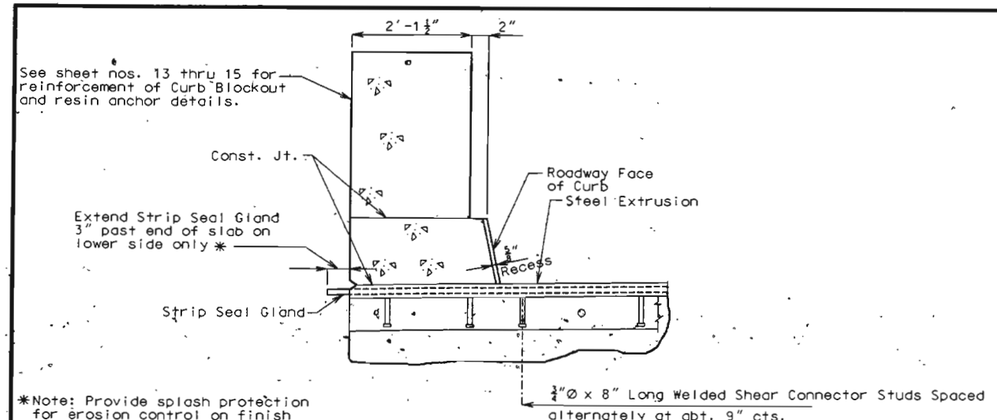


*Note: Provide splash protection for erosion control on finish ground line if required by the engineer (Roadway Item).

PART SECTION D-D

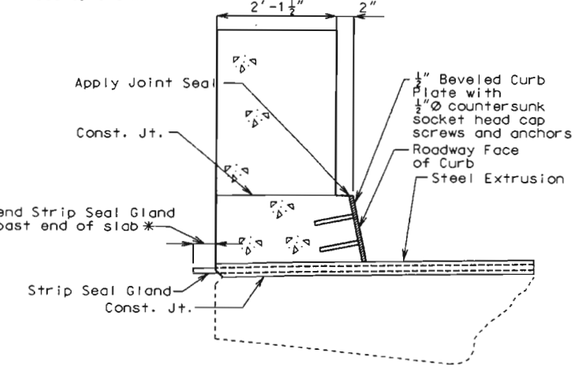


PART SECTION E-E (SHOWING CONCRETE REPLACEMENT)

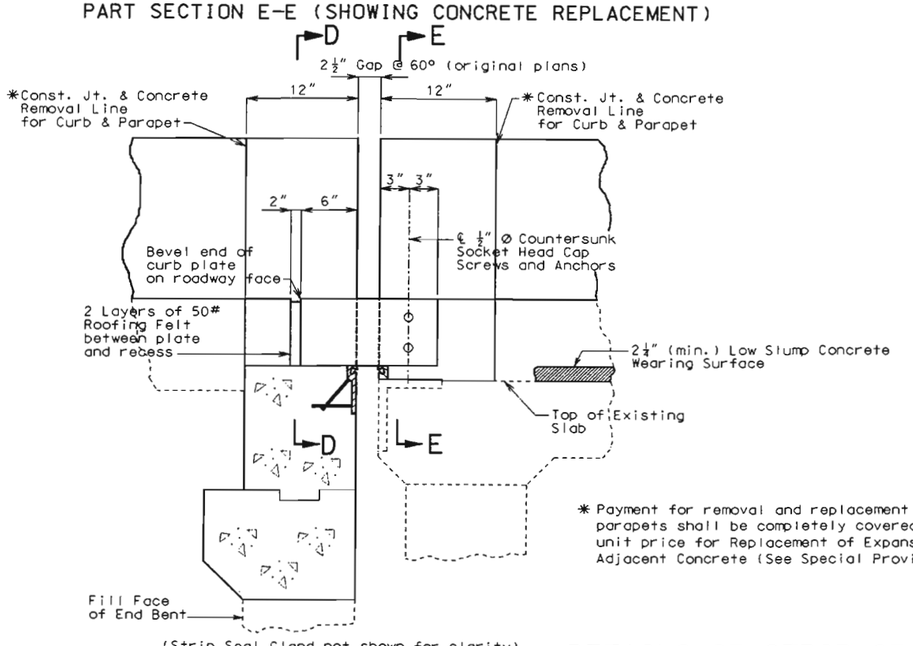


(Strip Seal Gland not shown for clarity)

PART SECTION B-B

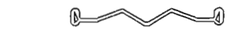

DETAIL OF GLAND

Note: Use single layer gland, no multiple layer glands allowed.

Strip seal gland size = 4"

STRIP SEAL GLAND

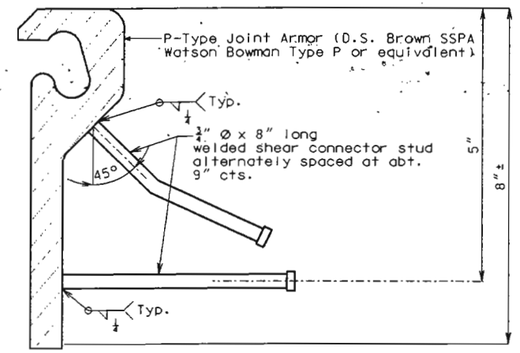


DETAIL OF STEEL EXTRUSION IN BACKWALL OF END BENT

DETAIL OF STEEL EXTRUSION ON EXISTING SLAB

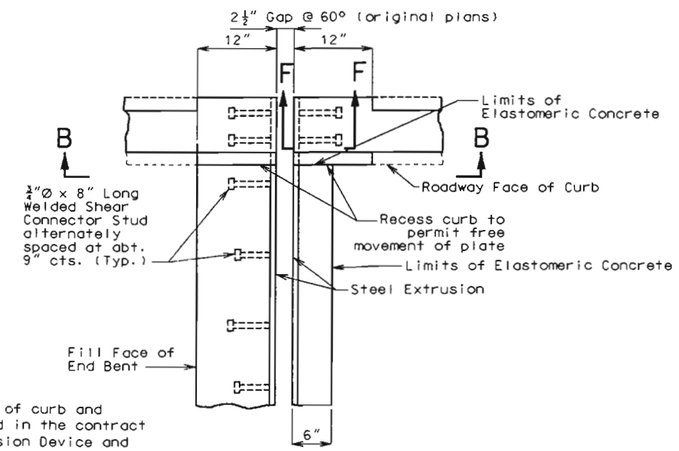


PART PLAN

* Payment for removal and replacement of curb and parapets shall be completely covered in the contract unit price for Replacement of Expansion Device and Adjacent Concrete (See Special Provisions).

NOTE:

The expansion device shall be fabricated and installed in accordance with the recommendations of the manufacturer, and as set forth in the Special Provisions.

The contractor shall verify all dimensions prior to fabrication.

Splices of steel extrusion shall develop full strength.

All steel shall be ASTM A709 Grade 36, except steel extrusions shall be ASTM A709 Grade 50W or Grade 36.

Neoprene Strip Seal shall meet ASTM D-2628.

Anchors for the extrusions or armor shall be approved welded studs, (C1010 thru C1020).

All welds shall conform to Section 712 of the Missouri Standard Specifications.

Concrete shall be forced under and around strip seal extrusions and studs. Proper consolidation of the concrete shall be achieved by localized internal vibration.

Plan dimensions are based on installation at 60°F. The gap shall be increased $\frac{1}{16}$" for each 10° fall in temperature and decreased $\frac{1}{16}$" for each 10° rise in temperature from the installation temperature.

Longitudinal reinforcing steel shall be placed so that ends shall not be more than 1"± from vertical leg of extrusion at Expansion Device.

Structural steel for the expansion device shall be coated with a minimum of two coats of inorganic zinc primer (5 mils minimum). Anchors need not be protected from overspray.

Payment for furnishing, coating and placing steel extrusions, miscellaneous structural steel, and neoprene strip seal shall be made under the contract unit price for Strip Seal Expansion Joint System per lin. ft.

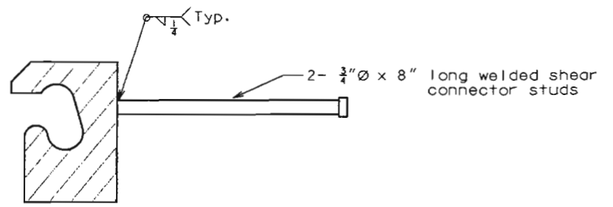


Note: Shift existing reinforcement in curb to clear studs.

PART SECTION F-F

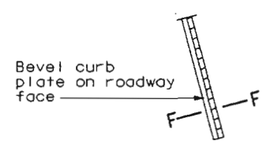


AT END OF BEVELED CURB PLATE

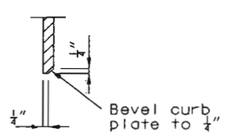


SECTION F-F

STATE OF MISSOURI
GREGORY E. SANDERS NUMBER E-2000162187
PROFESSIONAL ENGINEER
DATE 8-22-02

Detailed Apr. 2002
Checked July 2002

# DETAILS OF STRIP SEAL EXPANSION DEVICE REPLACEMENT AT END BENTS



JACKSON COUNTY A09933

| State | Proj. No. | Sheet No. |
|---|---|---|
| MO | . . . | Bill |

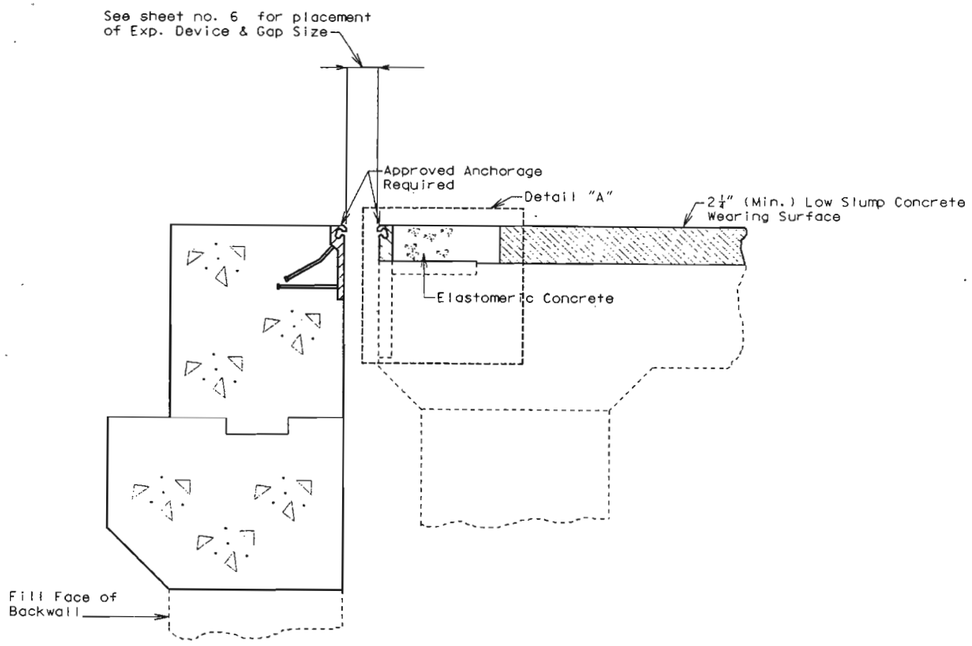


PART SECTION THRU END OF SLAB AT BENT NO. 1

Note: Bent No. 7 similar.

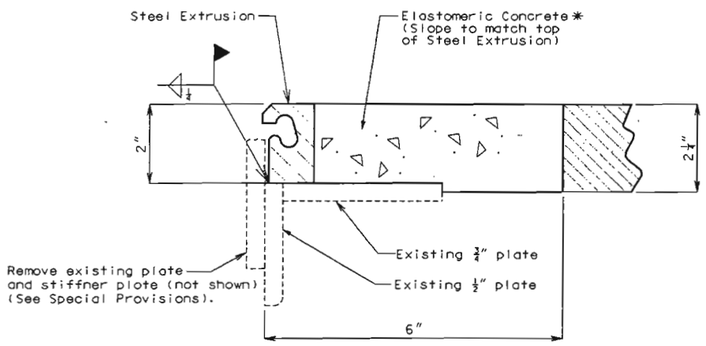


DETAIL "A"

* Submit manufacturer's specifications and installation requirements to the engineer for approval.

STATE OF MISSOURI
GREGORY E. SANDERS
NUMBER E-2000182367
ENGINEER

DATE 8-22-02

# DETAILS OF STRIP SEAL EXPANSION DEVICE AT END BENTS

Detailed Apr. 2002
Checked July 2002

Note: This drawing is not to scale. Follow dimensions.



JACKSON COUNTY A09933 REV.

T:\br-proj\robinc1\Misc-A09932\a09902_000expl.dgn 28-23 4M 08/20/2002

| STATE | PROJ. NO. | SHEET NO. |
|---|---|---|
| MO. | | B112 |

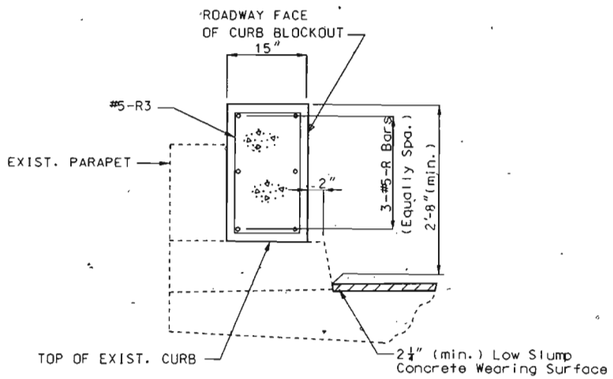


TYPICAL SECTION THRU CURB
BLOCKOUT SHOWING REINFORCEMENT

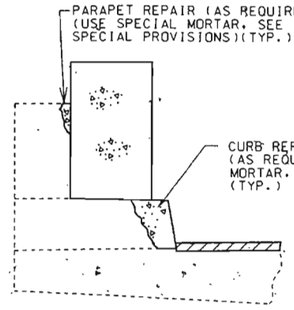


TYPICAL SECTION THRU CURB BLOCKOUT
SHOWING CONCRETE CURB & PARAPET REPAIR

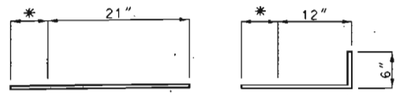


DETAILS OF RESIN ANCHORS
AT 15" CURB BLOCKOUTS

* Manufacturer's embedment depth but no greater than 5" in Exist. Parapet and no greater than 7" in Exist. Curb (4" over curb outlets).

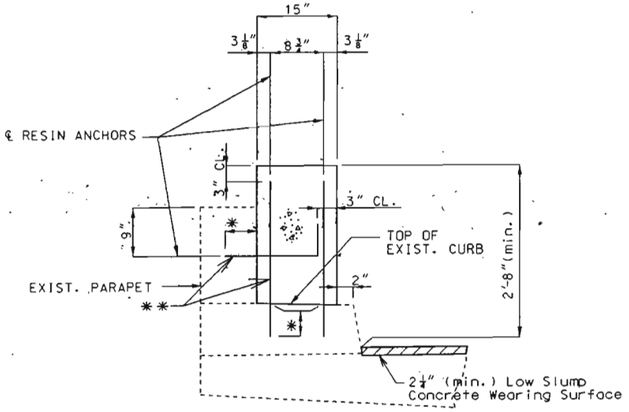


TYPICAL SECTION THRU CURB
BLOCKOUT SHOWING RESIN ANCHORS

** Resin anchors spaced with alternating pattern of abt. 12" cts.

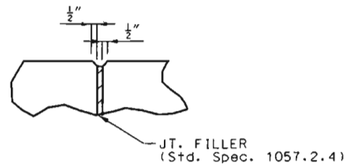


FILLED JOINT DETAIL

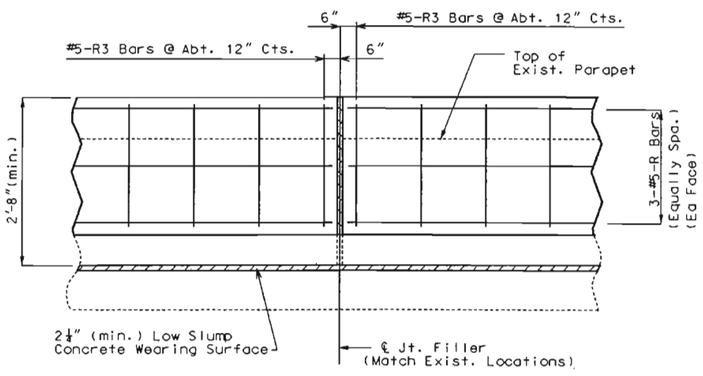


PART ELEVATION OF CURB BLOCKOUT SHOWING REINFORCEMENT

**NOTES FOR CURB BLOCKOUT:**

Concrete in curb blockout shall be Class B-1.

Measurement of the concrete Curb Blockout is to the nearest linear foot, measured along the inside face of existing parapet from end of wing to end of wing.

All exposed edges of curb blockout shall have ½" radius or ⅛" bevel unless otherwise shown.

Payment for concrete, reinforcing steel, resin anchors and any other work incidental to the curb blockout complete in place shall be included in the contract unit price for Curb Blockout.

Cost of any concrete curb & parapet repair shall be considered completely covered in the contract unit price for Curb Blockout.

Use a minimum lap of 3'-0" for #5 horizontal Curb Blockout bars where necessary.

The cross-sectional area of the Curb Blockout above top of existing curb = 2.59± sq. ft.

Provide or maintain access to existing active conduit systems and junction boxes.

Shift reinforcing steel in field where necessary to clear access openings for existing active junction boxes and conduit systems.

Match locations of existing filled joints.

Longitudinal reinforcing steel shall be field cut to required length between filled joints.

All reinforcing shall be epoxy coated.

Contractor shall prevent damage to existing conduit at light support standards or elsewhere on bridge. (See Special Provisions).

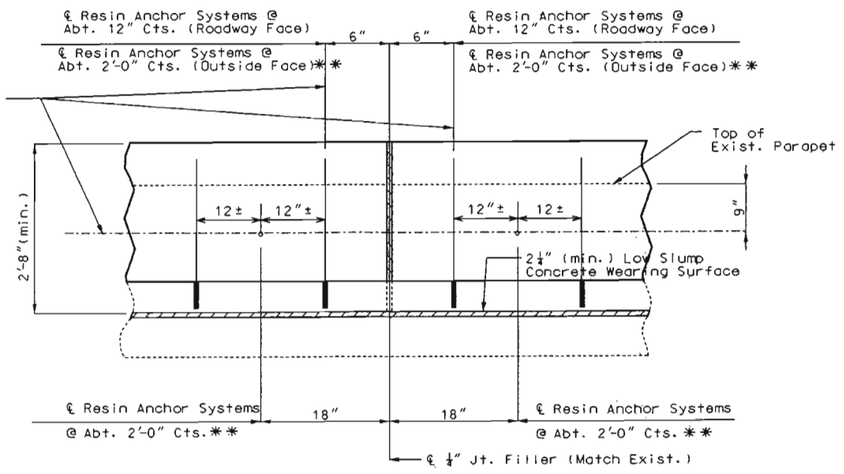


PART SECTION OF CURB BLOCKOUT SHOWING RESIN ANCHORS

STATE OF MISSOURI
GREGORY
E. SANDERS
NUMBER
E-2000142157
REGISTERED PROFESSIONAL ENGINEER
DATE 8-22-02

DETAILED Mar. 2002
CHECKED July 2002

# TYPICAL DETAILS OF CURB BLOCKOUT

NOTE: THIS DRAWING IS NOT TO SCALE. FOLLOW DIMENSIONS.



JACKSON COUNTY

A09933

| STATE | PROJ. NO. | SHEET NO. |
|---|---|---|
| MO. | | B113 |

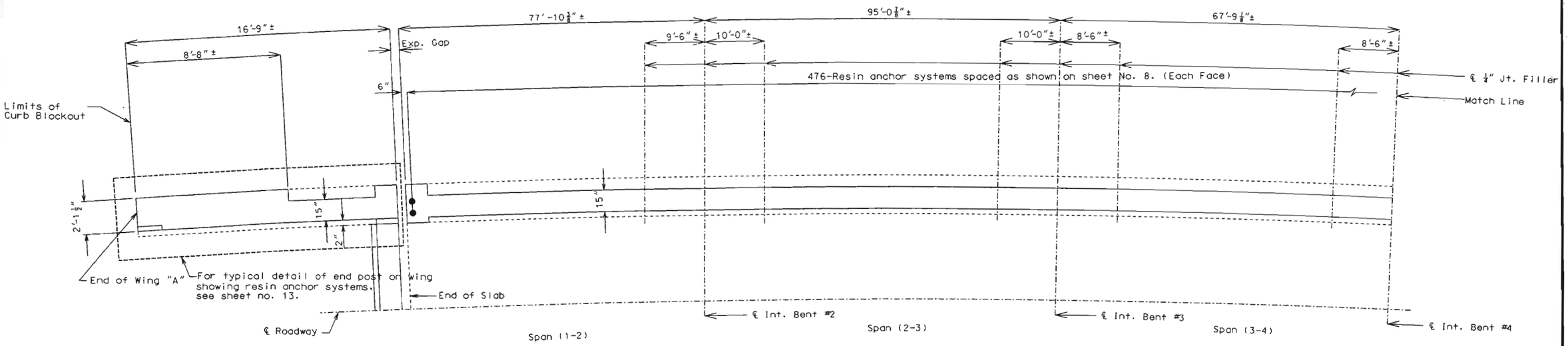


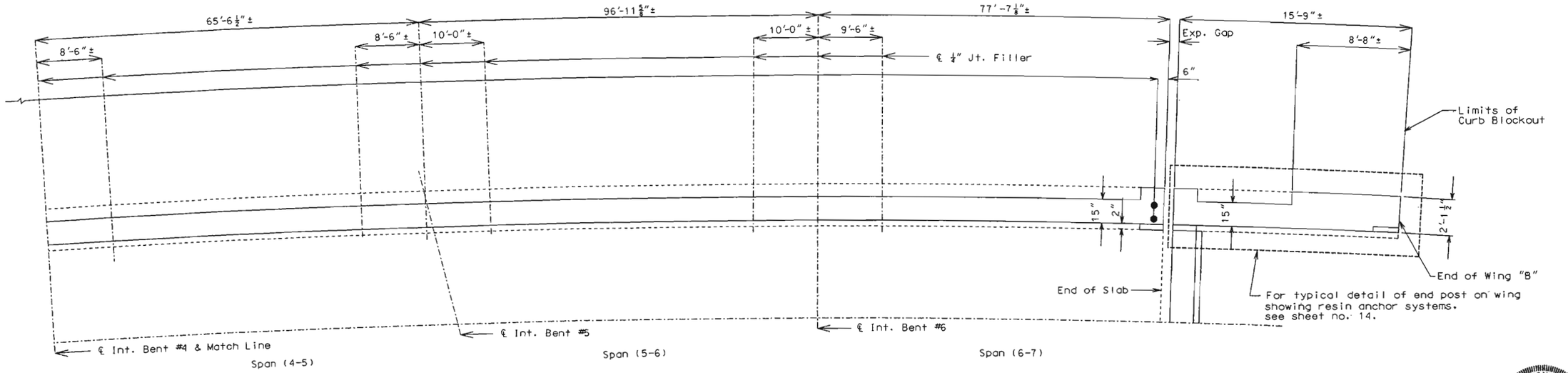


Note: Longitudinal dimensions shown are along ℄ parapet.
Match existing curb joints.
For details of resin anchor systems not shown. see sheet no. 8.

STATE OF MISSOURI
GREGORY E. SANDERS
NUMBER E-2000162167
REGISTERED PROFESSIONAL ENGINEER

DATE 8-22-02

## PLAN OF LEFT CURB BLOCKOUT SHOWING RESIN ANCHOR SPACING

DETAILED MAR. 2002
CHECKED July 2002

NOTE: THIS DRAWING IS NOT TO SCALE. FOLLOW DIMENSIONS.



JACKSON COUNTY A09933

| STATE | PROJ. NO. | SHEET NO. |
|---|---|---|
| MO. | | B14 |

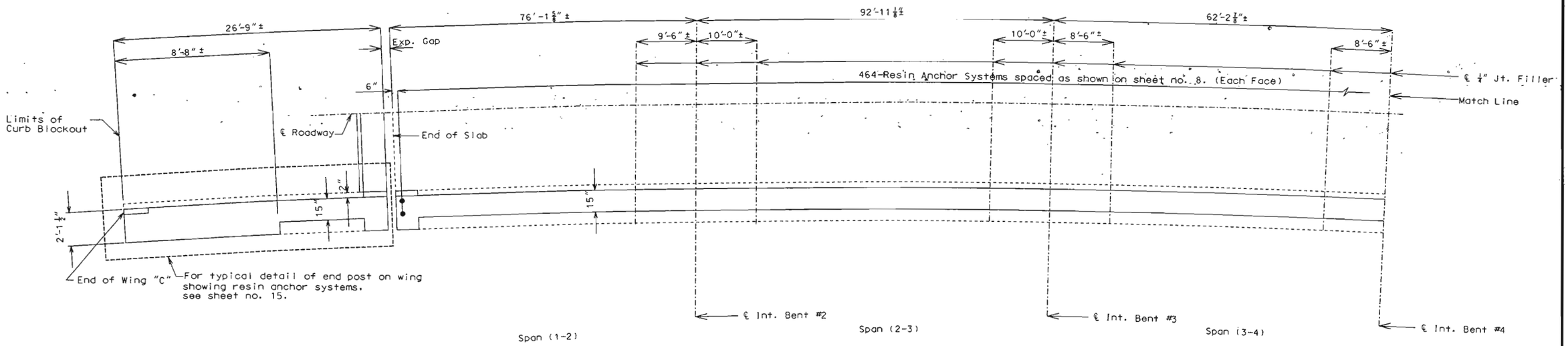


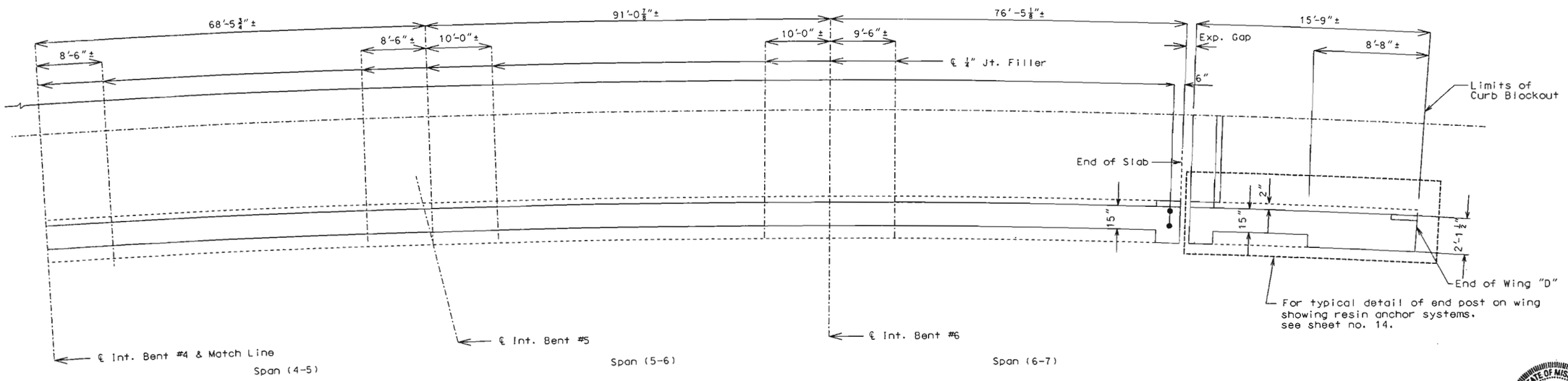


Note: Longitudinal dimensions shown are along ℄ parapet.
Match existing curb joints.
For details of resin anchor systems not shown. see sheet no. 8.

STATE OF MISSOURI
GREGORY E. SANDERS
NUMBER E-2000162157
DATE 7-22-02

## PLAN OF RIGHT CURB BLOCKOUT SHOWING RESIN ANCHOR SPACING

DETAILED MAR. 2002
CHECKED July 2002

NOTE: THIS DRAWING IS NOT TO SCALE. FOLLOW DIMENSIONS.



JACKSON COUNTY A09933

| STATE | PROJ. NO. | SHEET NO. |
|---|---|---|
| MO. | | B15 |

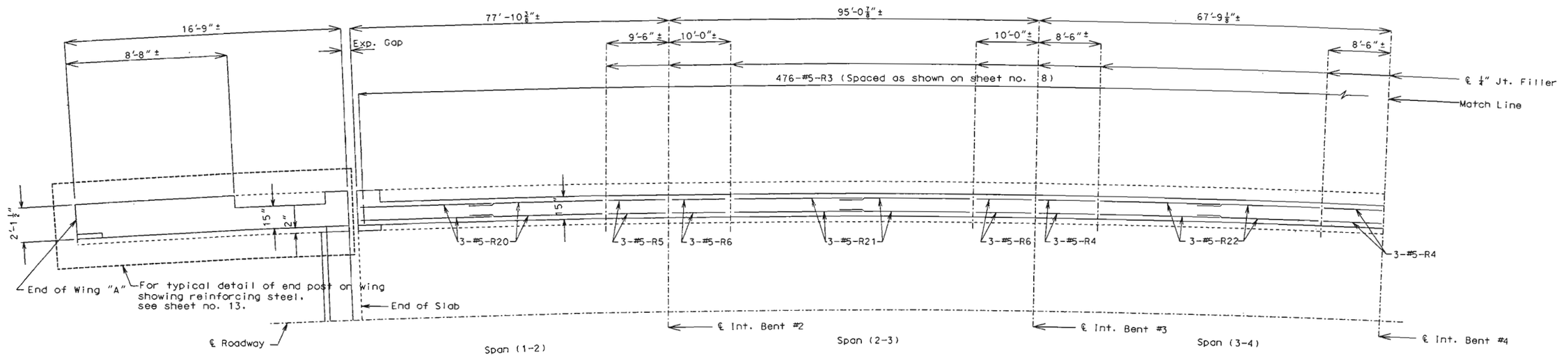


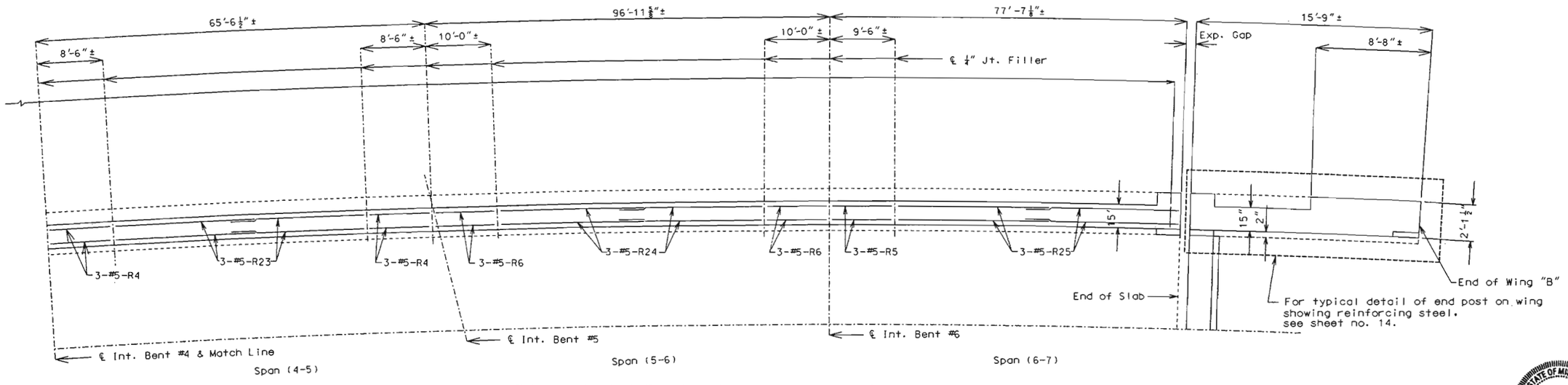


Note: Longitudinal dimensions shown are along ℄ parapet.
Match existing curb joints.
For details of reinforcing steel not shown, see sheet no. 8.
Use a minimum lap of 3'-0" for #5-R horizontal curb blockout bars.

STATE OF MISSOURI
GREGORY E. SANDERS
NUMBER E-2000162167
REGISTERED PROFESSIONAL ENGINEER

DATE 9-22-02

## PLAN OF LEFT CURB BLOCKOUT SHOWING REINFORCING STEEL

DETAILED MAR. 2002
CHECKED July 2002

NOTE: THIS DRAWING IS NOT TO SCALE. FOLLOW DIMENSIONS.



JACKSON COUNTY

A09933

| STATE | PROJ. NO. | SHEET NO. |
|---|---|---|
| MO. | | B116 |

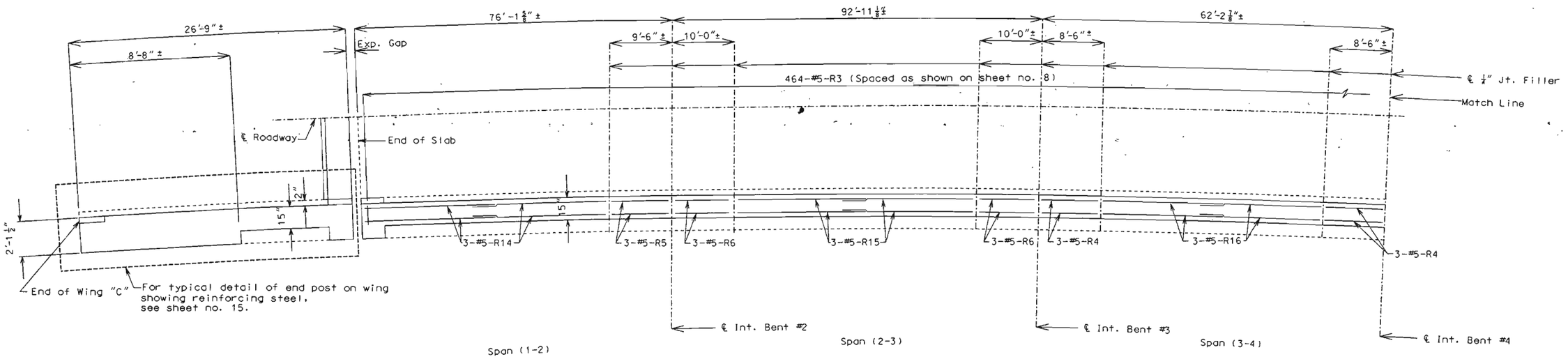


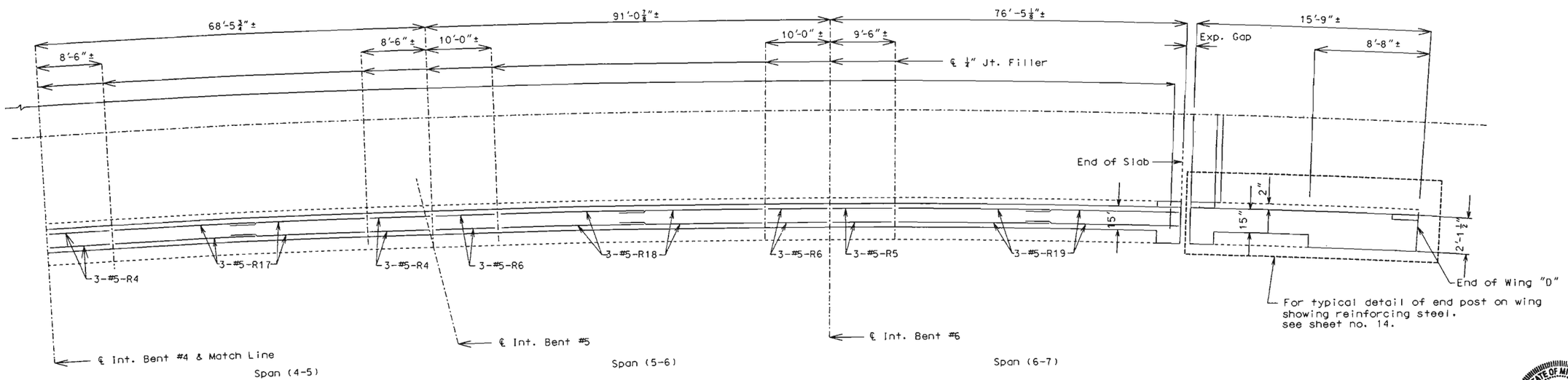


Note: Longitudinal dimensions shown are along ℄ parapet.
Match existing curb joints.
For details of reinforcing steel not shown see sheet no. 8.
Use a minimum lap of 3'-0" for #5-R horizontal curb blockout bars.

blockout bars.

PLAN OF RIGHT CURB BLOCKOUT SHOWING REINFORCING STEEL

STATE OF MISSOURI
GREGORY E. SANDERS
NUMBER E-2000162197
REGISTERED PROFESSIONAL ENGINEER
DATE 8-22-02

DETAILED MAR. 2002
CHECKED July 2002

NOTE: THIS DRAWING IS NOT TO SCALE. FOLLOW DIMENSIONS.



JACKSON COUNTY

A09933

| STATE | PROJ. NO. | SHEET NO. |
|---|---|---|
| MO. | | B117 |

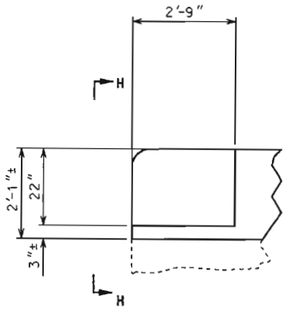


PART ELEVATION

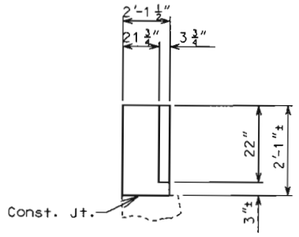


PART ELEVATION H-H

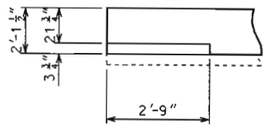


PART PLAN

DETAILS OF GUARD RAIL ATTACHMENT

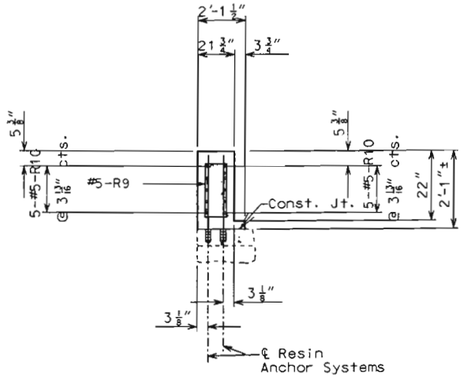


SECTION E-E

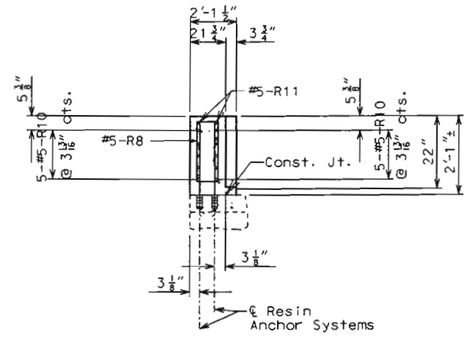


SECTION F-F

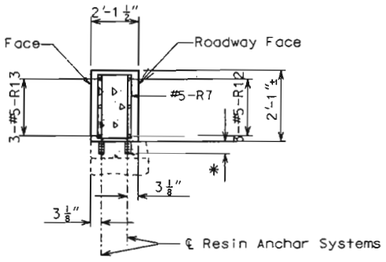


SECTION G-G

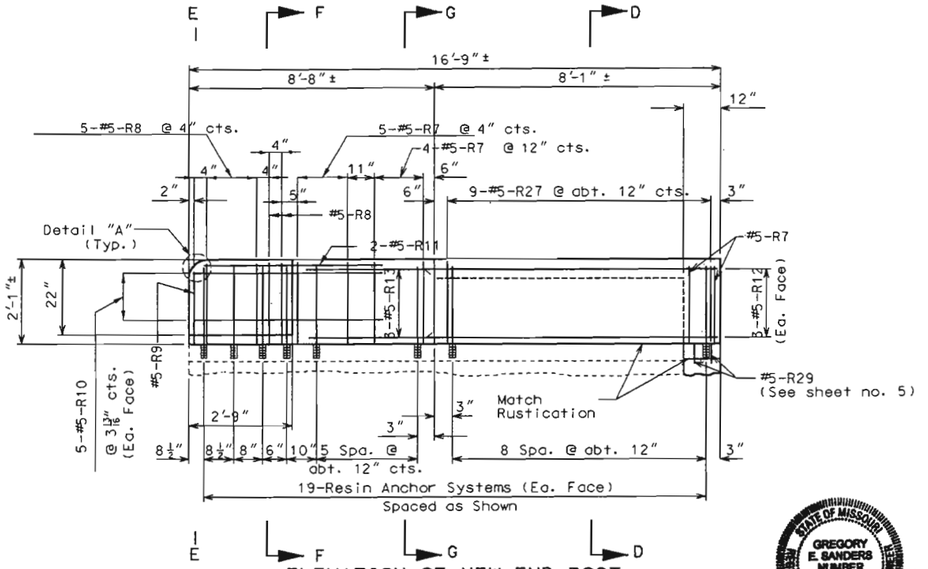


ELEVATION OF NEW END POST ON WING

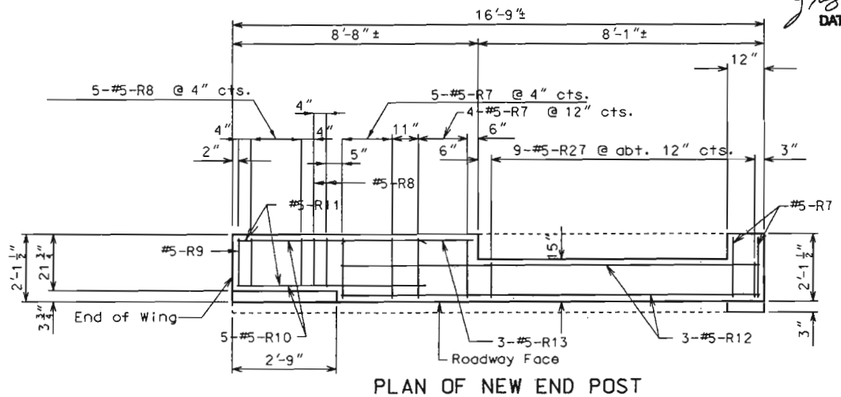


PLAN OF NEW END POST ON WING

Note: Resin anchors not shown in plan for clarity.

* As shown on sheet no. 8 (Typ.)

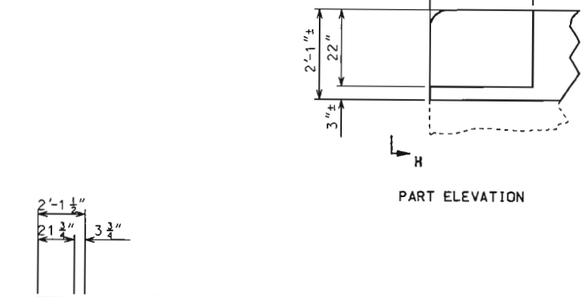


ELEVATION OF EXISTING END POST SHOWING CONCRETE REMOVAL

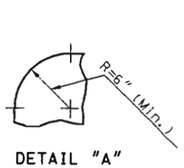


DETAIL "A"

① Use alternating resin anchors in existing parapet & curb as shown on sheet no. 8.

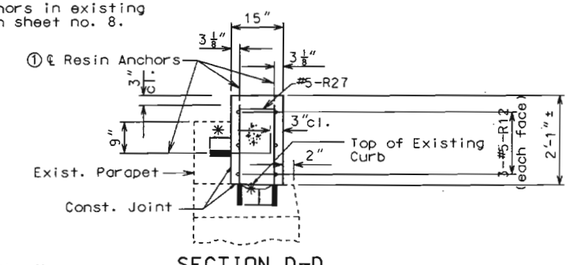


SECTION D-D

Note: For correct orientation, see sheet no. 9.

# TYPICAL DETAILS OF END POST BLOCKOUT ON WING "A"

DETAILED MAR. 2002
CHECKED July 2002

NOTE: THIS DRAWING IS NOT TO SCALE. FOLLOW DIMENSIONS.

SHEET NO. 13 OF 17.

JACKSON COUNTY

A09933

| STATE | PROJ. NO. | SHEET NO. |
|---|---|---|
| MO. | | 8118 |

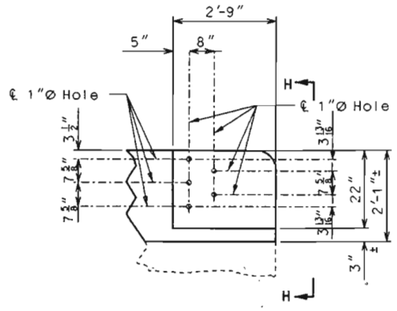


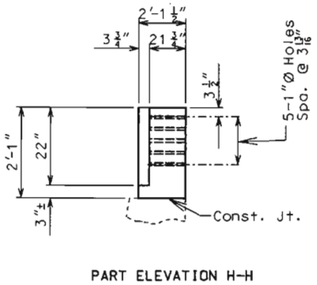


DETAILS OF GUARD RAIL ATTACHMENT

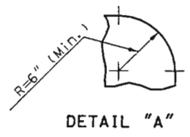


DETAIL "A"

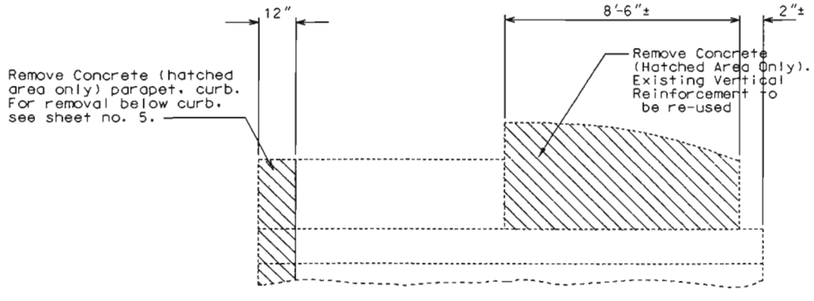


ELEVATION OF EXISTING END POST SHOWING CONCRETE REMOVAL

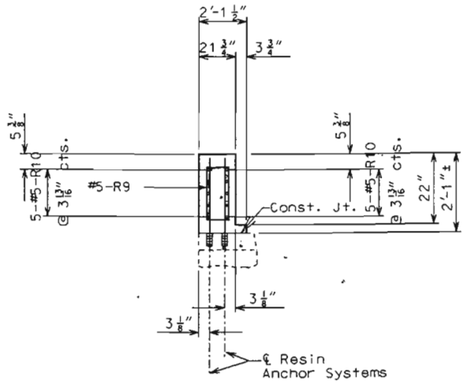


SECTION E-E

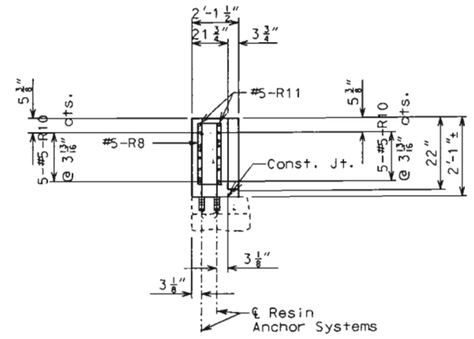


SECTION F-F

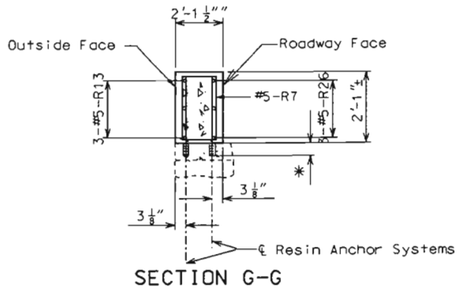


SECTION G-G

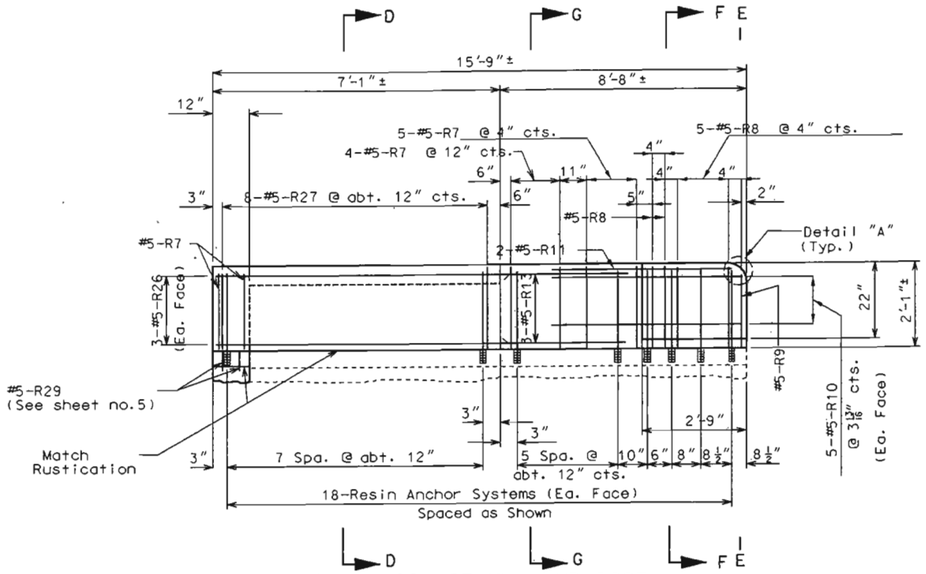


ELEVATION OF NEW END POST ON WING

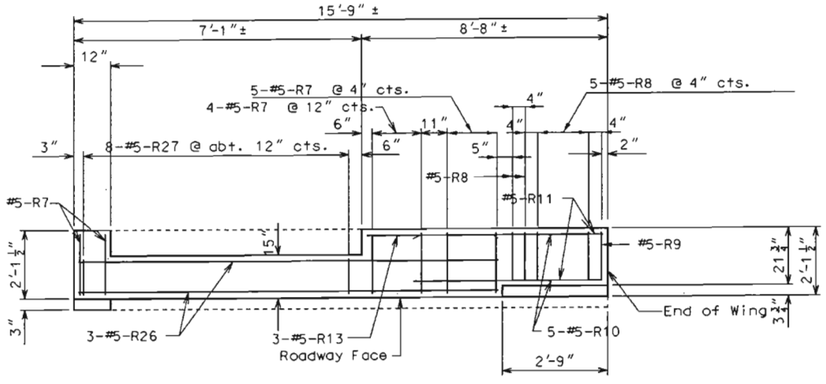


PLAN OF NEW END POST ON WING

Note: Resin anchors not shown in plan for clarity.

* As shown on sheet no. 8 (Typ.)

① Use alternating resin anchors in existing parapet & curb as shown on sheet no. 8.

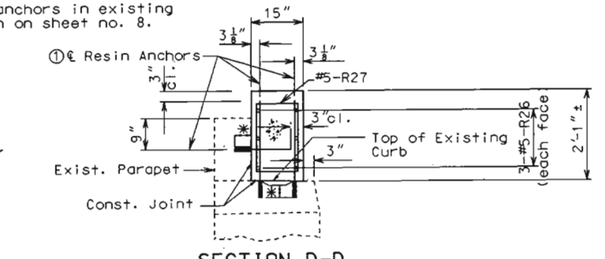


SECTION D-D

Note: For correct orientation, see sheet nos. 9 & 10.

TYPICAL DETAILS OF END POST BLOCKOUT ON WING "B" & "D"

DETAILED MAR. 2002
CHECKED July 2002

NOTE: THIS DRAWING IS NOT TO SCALE. FOLLOW DIMENSIONS.

SHEET NO. 14 OF 17

JACKSON COUNTY

A09933

| STATE | PROJ. NO. | SHEET NO. |
|---|---|---|
| MO. | | 8119 |

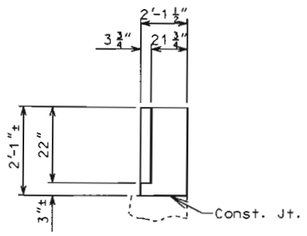


PART ELEVATION H-H

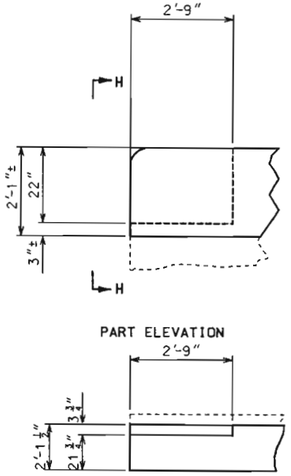


PART PLAN

DETAILS OF GUARD RAIL ATTACHMENT

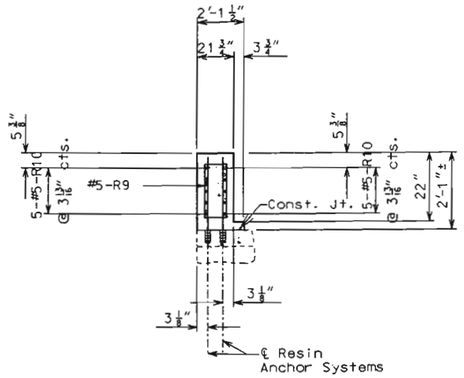


SECTION E-E

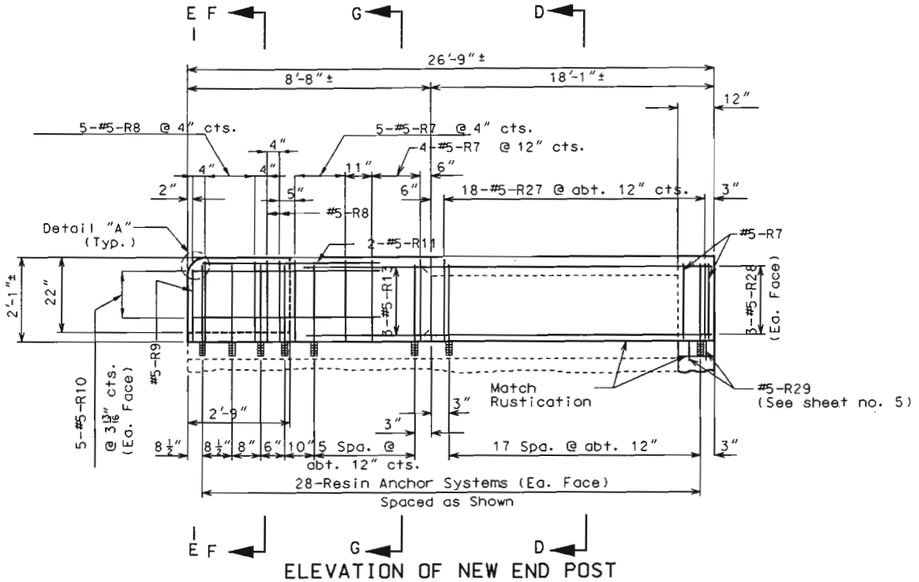


ELEVATION OF NEW END POST ON WING

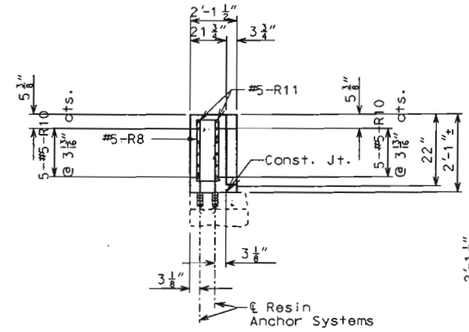


SECTION F-F

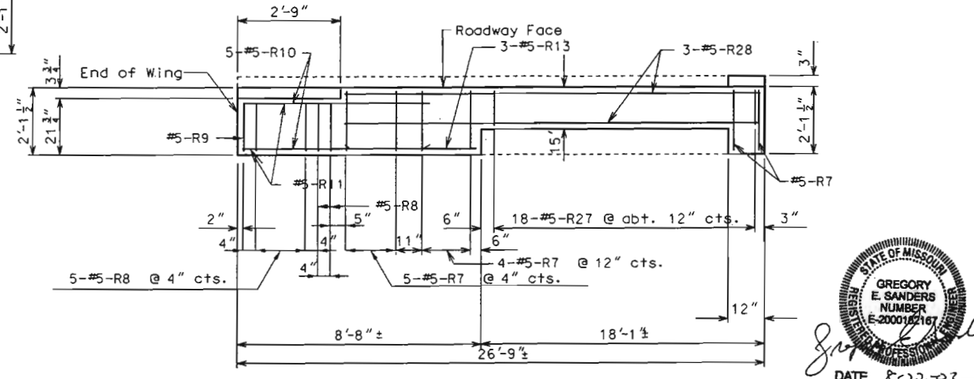


PLAN OF NEW END POST ON WING

Note: Resin anchors not shown in plan for clarity.

* As shown on sheet no. 8 (Typ.)

① Use alternating resin anchors in existing parapet & curb as shown on sheet no. 8.

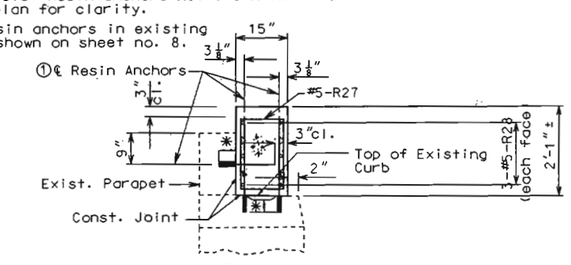


SECTION D-D

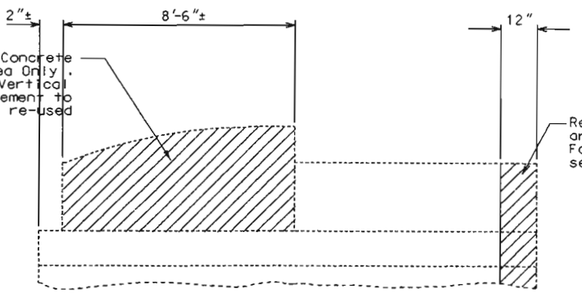


ELEVATION OF EXISTING END POST SHOWING CONCRETE REMOVAL

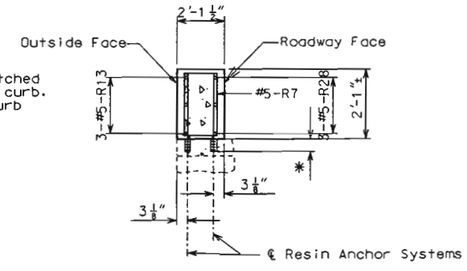


SECTION G-G

DETAIL "A"

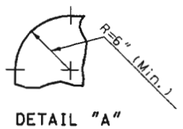


Note: For correct orientation, see sheet no. 10.

# TYPICAL DETAILS OF END POST BLOCKOUT ON WING "C"

DETAILED MAR. 2002
CHECKED July 2002

NOTE: THIS DRAWING IS NOT TO SCALE. FOLLOW DIMENSIONS.



JACKSON COUNTY

A09933

| State | Proj. No. | Sheet No. |
|---|---|---|
| MO | | B120 |

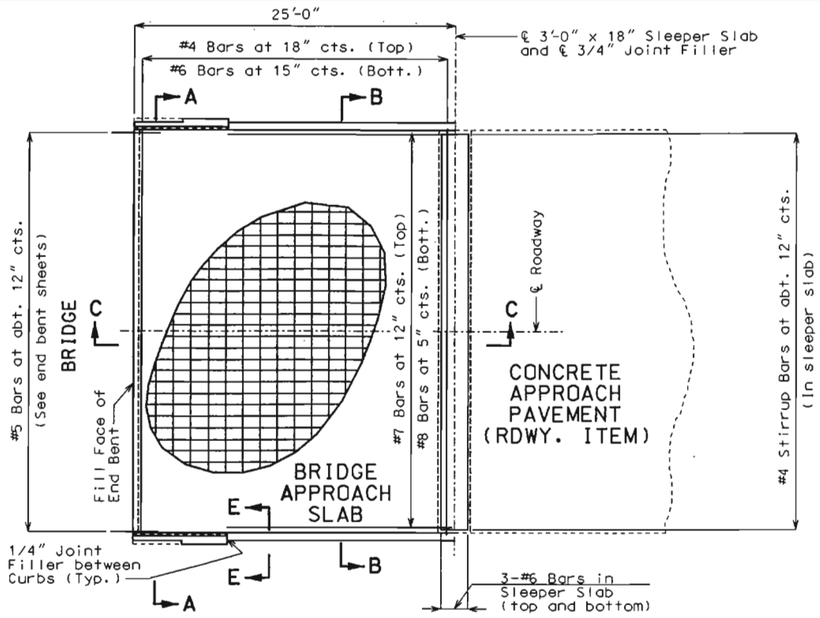


PART PLAN SHOWING REINFORCEMENT

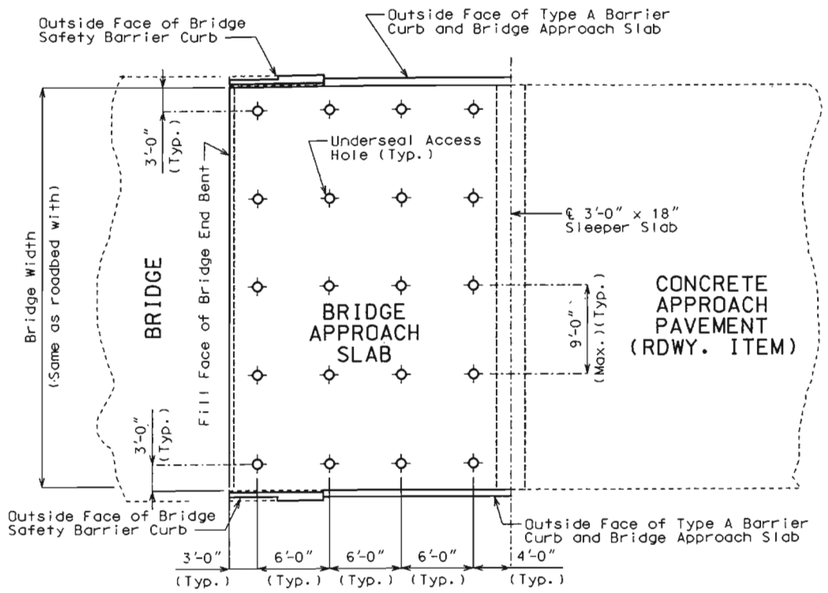


PART PLAN
(SHOWING TYPICAL UNDERSEAL ACCESS HOLE LOCATIONS)

## GENERAL NOTES:

All concrete for the bridge approach slab and sleeper slab shall be in accordance with Section 503 (f'c = 4,000 psi) of the Missouri Standard Specifications.

All joint filler shall meet the requirements of Section 1057.2.5 of the Missouri Standard Specifications, except as noted.

The reinforcing steel in the bridge approach slab and the sleeper slab shall be epoxy coated Grade 60 with Fy = 60,000 psi.

Minimum clearance to reinforcing steel shall be 1-1/2", unless otherwise shown.

The reinforcing steel in the bridge approach slab and the sleeper slab shall be continuous. The transverse reinforcing steel may be made continuous by lap splicing the #4 & #6 bars 18" and 26" respectively.

Mechanical bar splices will be permitted and shall develop at least 125 percent of the specified yield strength of the reinforcing bars being spliced. The contractor shall furnish the Engineer the manufacturer's certification that this requirement is met and is required to follow the manufacturer's recommendation for installation.

Mechanical bar splices shall be epoxy coated in accordance with Section 710 of the Missouri Standard Specifications.

Hooks and bends shall be in accordance with the CRSI Manual of Standard Practice for Detailing Reinforced Concrete Structures. Stirrup and Tie Dimensions.

The contractor shall pour and satisfactorily finish the bridge slab before pouring the bridge approach slabs.

Longitudinal construction joints in approach slab and sleeper slab shall be aligned with longitudinal construction joints in bridge slab.

Payment for furnishing all materials, labor and excavation necessary to construct the approach slab, including the timber header, sleeper slab, underdrain, Type 5 aggregate base and all other appurtenances and incidental work as shown on this sheet, complete in place, shall be considered as completely covered under the contract unit price for Bridge Approach Slab (Bridge), per sq. yd.

For Concrete Approach Pavement details, see roadway plans.

See Missouri Standard Plans Drawing 609.00 for details of Type A Barrier Curb.

When a lap splice is required for the use of a mechanical bar splice, the minimum lap length shall be 40" for transverse approach slab bar splices.

At the contractor's option, Grade 40 reinforcement may be substituted for the Grade 60 #5 dowel bars connecting the bridge approach slab to the bridge abutment. No additional payment will be made for this substitution.

When Grade 40 reinforcement is substituted for the Grade 60 #5 dowel bars connecting the bridge approach slab to the bridge abutment, the reinforcement may be bent up to 90 degrees with a 2" minimum radius near the abutment to allow compaction of the backfill material near the abutment. Damage to epoxy coating shall be repaired according to Section 710.3.3 of the Missouri Standard Specifications.

Drain pipe may be either 6" diameter corrugated metallic-coated pipe underdrain, 4" diameter corrugated polyvinyl chloride (PVC) drain pipe, or 4" diameter corrugated polyethylene (PE) drain pipe.

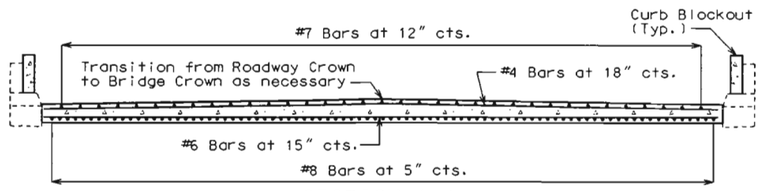


SECTION A-A

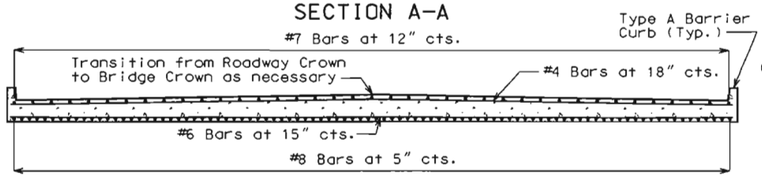


SECTION B-B

Note: With the approval of the Engineer, the contractor may crown the bottom of the approach slab to match the crown of the roadway surface.

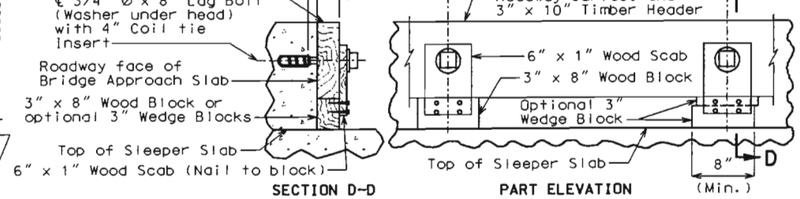


SECTION D-D PART ELEVATION

Note: Remove timber header when concrete pavement is placed.

DETAILS OF TIMBER HEADER

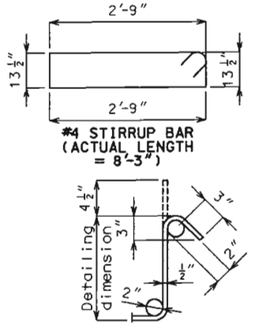


TYPICAL 135° STIRRUP HOOK DIMENSIONS BENDING DIAGRAM

Note: Nominal lengths are based on out to out dimensions shown in bending diagram and are listed for fabricators use (nearest inch).

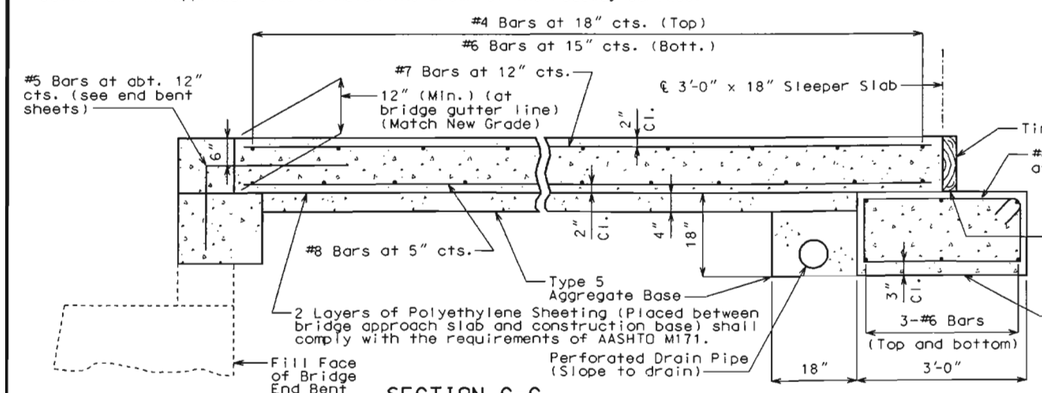


SECTION C-C

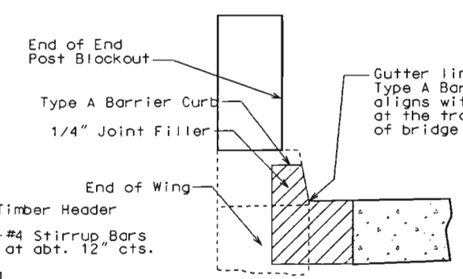


SECTION E-E
(BETWEEN CURBS)

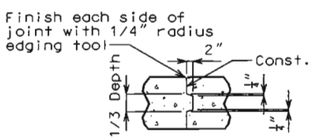


CONST. JOINT DETAIL
(IF REQUIRED)

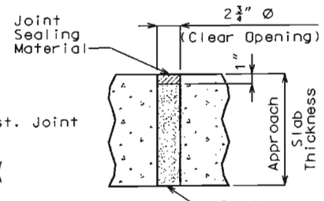


TYPICAL UNDERSEAL ACCESS HOLE DETAIL

STATE OF MISSOURI REGISTERED PROFESSIONAL ENGINEER
GREGORY E. SANDERS NUMBER E-2000122167
DATE 8-22-02

BRIDGE APPROACH SLAB

Detailed Mar. 2002
Checked July 2002

Note: This drawing is not to scale. Follow dimensions.

Sheet No. 16 of 17

JACKSON COUNTY A09933

T:\br-proj\robinc1\Misc-A09932\a09933_000appslab.dgn 8:28:49 AM 08/20/2002

barbill_i June 2002

# BILL OF REINFORCING STEEL

| NO. REQ'D. | MARK NO. SIZE MARK | LOCATION | EPOXY (E) | SHAPE NO. | STIRRUP (S) | SUBSTR. (X) | VARIES (V) | NO. EACH | DIMENSIONS B FT. IN. | C FT. IN. | D FT. IN. | E FT. IN. | F FT. IN. | H FT. IN. | K FT. IN. | NOMINAL LENGTH FT. IN. | ACTUAL LENGTH FT. IN. | WEIGHT LBS. |
|---|---|---|---|---|---|---|---|---|---|---|---|---|---|---|---|---|---|---|
| | | SUPERSTR. | | | | | | | | | | | | | | | | |
| | | END BT 1&7 | | | | | | | | | | | | | | | | |
| *6 | 6 H1 | BACKWALL | E | 20 | | | | | 39 9.000 | | | | | | | 39 9 | 39 9 | 358 |
| 8 | 6 H2 | BACKWALL | E | 20 | | | | | 39 9.000 | | | | | | | 39 9 | 39 9 | 478 |
| 80 | 5 H3 | BACKWALL | E | 19 | | | | | 18.000 | 21.000 | | | | | | 3 3 | 3 2 | 264 |
| 56 | 4 U1 | BACKWALL | E | 10 | S | | | | | 18.000 | 9.000 | | | | | 3 9 | 3 7 | 134 |
| 54 | 4 U2 | BACKWALL | E | 10 | S | | | | | 13.000 | 15.000 | | | | | 3 5 | 3 3 | 117 |
| 940 | 5 R3 | BARRIER CURB | E | 13 | S | | | | 12.000 | 19.750 | 12.000 | 19.750 | | | | 6 3 | 5 11 | 5801 |
| 48 | 5 R4 | BARRIER CURB | E | 20 | | | | | 8 3.000 | | | | | | | 8 3 | 8 3 | 413 |
| 24 | 5 R5 | BARRIER CURB | E | 20 | | | | | 9 3.000 | | | | | | | 9 3 | 9 3 | 232 |
| 48 | 5 R6 | BARRIER CURB | E | 20 | | | | | 9 9.000 | | | | | | | 9 9 | 9 9 | 488 |
| 44 | 5 R7 | BARRIER CURB | E | 13 | S | | | | 22.500 | 22.000 | 22.500 | 22.000 | | | | 8 4 | 8 0 | 367 |
| 28 | 5 R8 | BARRIER CURB | E | 13 | S | | | | 18.750 | 22.000 | 18.750 | 22.000 | | | | 7 9 | 7 5 | 217 |
| 4 | 5 R9 | BARRIER CURB | E | 13 | S | | | | 18.750 | 17.000 | 18.750 | 17.000 | | | | 6 11 | 6 7 | 27 |
| 40 | 5 R10 | BARRIER CURB | E | 20 | | | | | 6 0.000 | | | | | | | 6 0 | 6 0 | 250 |
| 8 | 5 R11 | BARRIER CURB | E | 20 | | | | | 5 9.000 | | | | | | | 5 9 | 5 9 | 48 |
| 6 | 5 R12 | BARRIER CURB | E | 20 | | | | | 13 9.000 | | | | | | | 13 9 | 13 9 | 86 |
| 12 | 5 R13 | BARRIER CURB | E | 20 | | | | | 8 5.000 | | | | | | | 8 5 | 8 5 | 105 |
| 12 | 5 R14 | BARRIER CURB | E | 20 | | | | | 34 9.000 | | | | | | | 34 9 | 34 9 | 435 |
| 12 | 5 R15 | BARRIER CURB | E | 20 | | | | | 37 10.000 | | | | | | | 37 10 | 37 10 | 474 |
| 12 | 5 R16 | BARRIER CURB | E | 20 | | | | | 24 0.000 | | | | | | | 24 0 | 24 0 | 300 |
| 12 | 5 R17 | BARRIER CURB | E | 20 | | | | | 27 2.000 | | | | | | | 27 2 | 27 2 | 340 |
| 12 | 5 R18 | BARRIER CURB | E | 20 | | | | | 36 11.000 | | | | | | | 36 11 | 36 11 | 462 |
| 12 | 5 R19 | BARRIER CURB | E | 20 | | | | | 34 10.000 | | | | | | | 34 10 | 34 10 | 436 |
| 12 | 5 R20 | BARRIER CURB | E | 20 | | | | | 35 7.000 | | | | | | | 35 7 | 35 7 | 445 |
| 12 | 5 R21 | BARRIER CURB | E | 20 | | | | | 38 11.000 | | | | | | | 38 11 | 38 11 | 487 |
| 12 | 5 R22 | BARRIER CURB | E | 20 | | | | | 26 9.000 | | | | | | | 26 9 | 26 9 | 335 |
| 12 | 5 R23 | BARRIER CURB | E | 20 | | | | | 25 8.000 | | | | | | | 25 8 | 25 8 | 321 |
| 12 | 5 R24 | BARRIER CURB | E | 20 | | | | | 39 10.000 | | | | | | | 39 10 | 39 10 | 499 |
| 12 | 5 R25 | BARRIER CURB | E | 20 | | | | | 35 5.000 | | | | | | | 35 5 | 35 5 | 443 |
| *14 | 5 R26 | BARRIER CURB | E | 20 | | | | | 12 9.000 | | | | | | | 12 9 | 12 9 | 186 |
| 43 | 5 R27 | BARRIER CURB | E | 13 | S | | | | 12.000 | 20.500 | 12.000 | 20.500 | | | | 6 4 | 6 0 | 269 |
| 6 | 5 R28 | BARRIER CURB | E | 20 | | | | | 23 9.000 | | | | | | | 23 9 | 23 9 | 149 |
| 8 | 5 R29 | BARRIER CURB | E | 10 | | | | | | 18.000 | 2 1.500 | | | | | 5 2 | 4 11 | 41 |
| | | TOTALS | | | | | | | | | | | | | | | | |
| | 4 | | E | | | | | | | | | | | | | | | 251 |
| | 5 | | E | | | | | | | | | | | | | | | 13920 |
| | 6 | | E | | | | | | | | | | | | | | | 836 |
| | | TOTAL | | | | | | | | | | | | | | | | 0 |
| | | TOTAL | E | | | | | | | | | | | | | | | 15007 |
| | | Slab on Girder | | | | | | | | | | | | | | | | |
| | 4 | | E | | | | | | | | | | | | | | | 251 |
| | 5 | | E | | | | | | | | | | | | | | | 264 |

# BILL OF REINFORCING STEEL

| NO. REQ'D. | MARK NO. SIZE MARK | LOCATION | EPOXY (E) | SHAPE NO. | STIRRUP (S) | SUBSTR. (X) | VARIES (V) | NO. EACH | DIMENSIONS B FT. IN. | C FT. IN. | D FT. IN. | E FT. IN. | F FT. IN. | H FT. IN. | K FT. IN. | NOMINAL LENGTH FT. IN. | ACTUAL LENGTH FT. IN. | WEIGHT LBS. |
|---|---|---|---|---|---|---|---|---|---|---|---|---|---|---|---|---|---|---|
| | 6 | | E | | | | | | | | | | | | | | | 836 |
| | | TOTAL | | | | | | | | | | | | | | | | 1351 |
| | | Safety Barrier Curb | | | | | | | | | | | | | | | | |
| | 5 | | E | | | | | | | | | | | | | | | 13656 |
| | | TOTAL | | | | | | | | | | | | | | | | 13656 |

| State | Proj. No. | Sheet No. |
|---|---|---|
| MO | | B12 |

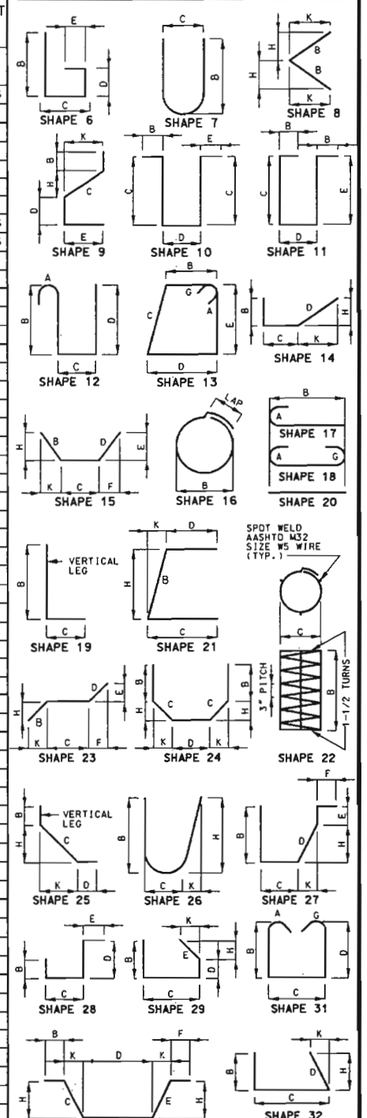


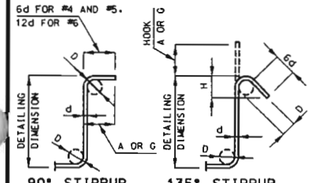


DETAILED JULY 2002
CHECKED JULY 2002

## STIRRUP HOOK DIMENSIONS

GRADES 40 - 50 - 60 KSI

| BAR SIZE | D (IN.) | 90° HOOK HOOK A OR G | 135° HOOK HOOK A OR G | 135° HOOK APPROX. H |
|---|---|---|---|---|
| #4 | 2" | 4-1/2" | 4-1/2" | 3" |
| #5 | 2-1/2" | 6" | 5-1/2" | 3-3/4" |
| #6 | 4-1/2" | 12" | 8" | 4-1/2" |

NOTE: UNLESS OTHERWISE NOTED DIAMETER "D" IS THE SAME FOR ALL BENDS AND HOOKS ON A BAR.

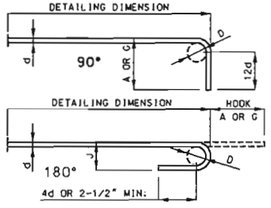


## END HOOK DIMENSIONS

| BAR SIZE | D (IN.) | ALL GRADES 180° HOOKS A OR G | 180° HOOKS J | 90° HOOKS A OR G |
|---|---|---|---|---|
| #3 | 2-1/4" | 5" | 3" | 6" |
| #4 | 3" | 6" | 4" | 8" |
| #5 | 3-3/4" | 7" | 5" | 10" |
| #6 | 4-1/2" | 8" | 6" | 12" |
| #7 | 5-1/4" | 10" | 7" | 14" |
| #8 | 6" | 11" | 8" | 16" |
| #9 | 9-1/2" | 15" | 11-3/4" | 19" |
| #10 | 10-3/4" | 17" | 13-1/4" | 22" |
| #11 | 12" | 19" | 14-3/4" | 2'-0" |
| #14 | 18-1/4" | 2'-3" | 21-3/4" | 2'-7" |

* TWO ADDITIONAL #6H1 & #5R26 ARE INCLUDED IN THE BAR BILL FOR TESTING.

NOTE:
ALL STANDARD HOOKS AND BENDS OTHER THAN 180 DEG. TO BE BENT WITH THE SAME PROCEDURE AS FOR 90 DEG. STD. HOOKS.
HOOKS AND BENDS SHALL BE IN ACCORDANCE WITH THE PROCEDURES AS SHOWN ON THIS SHEET.
E = EPOXY COATED REINFORCEMENT.
S = STIRRUP.
X = BAR IS INCLUDED IN SUBSTRUCTURE QUANTITIES.
V = BAR DIMENSIONS VARY IN EQUAL INCREMENTS BETWEEN DIMENSIONS SHOWN ON THIS LINE AND THE FOLLOWING LINE.
NO. EA. = NUMBER OF BARS OF EACH LENGTH.
NOMINAL LENGTHS ARE BASED ON OUT TO OUT DIMENSIONS SHOWN IN BENDING DIAGRAMS AND ARE LISTED FOR FABRICATOR'S USE (NEAREST INCH).
ACTUAL LENGTHS ARE MEASURED ALONG CENTERLINE BAR TO THE NEAREST INCH.
PAYWEIGHTS ARE BASED ON ACTUAL LENGTHS.
FOUR ANGLE OR CHANNEL SPACERS ARE REQUIRED FOR EACH COLUMN SPIRAL. SPACERS ARE TO BE PLACED ON INSIDE OF SPIRALS. LENGTH AND WEIGHT OF COLUMN SPIRALS DO NOT INCLUDE SPLICES OR SPACERS.
REINFORCING STEEL (GRADE 60) = FY 60.000 PSI.

STATE OF MISSOURI
GREGORY E. SANDERS
NUMBER E-2000162187
REGISTERED PROFESSIONAL ENGINEER
DATE 8-22-02

NOTE: THIS DRAWING IS NOT TO SCALE. FOLLOW DIMENSIONS.

SHEET NO. 17 OF 17

JACKSON COUNTY A09933

T:\br-proj\robinc\Misc-A09932\A09932bb_01.dgn 09:28:40 AM 08/20/2002

# MISSOURI HIGHWAY AND TRANSPORTATION COMMISSION

| State | Proj. No. | Sheet No. |
|---|---|---|
| MO | J4I0712 | B49 |
| 021115-407 | I-435-1(277) | |
| SEC/SUR 19 | TWP 49N RGE 32W | |

## U.I.P. (76'-94'-67'-67'-94'-76') CONTINUOUS CONCRETE BOX GIRDER SPANS

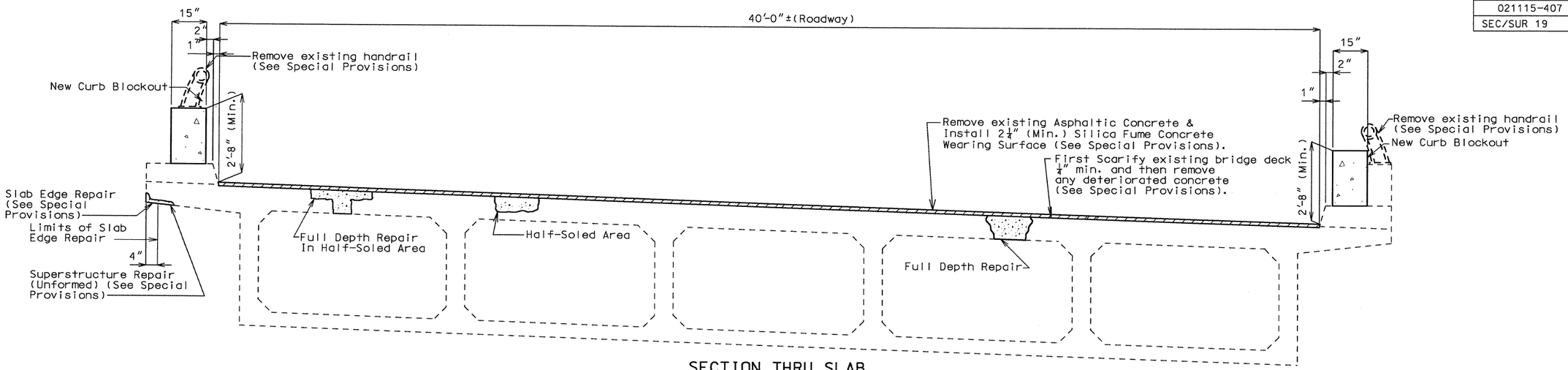


## SECTION THRU SLAB

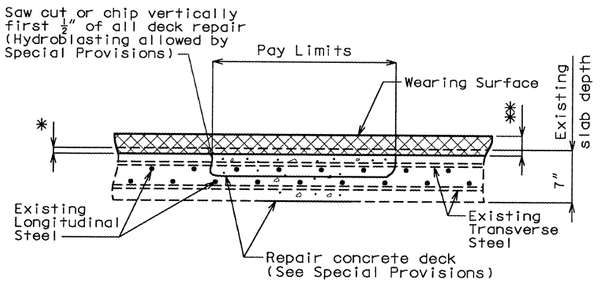


* First Scarify existing bridge deck ¼" min. and then remove any deteriorated concrete. (See Special Provisions)

** 2¼" (min.) Low Slump Concrete Wearing Surface

HALF-SOLED AREA

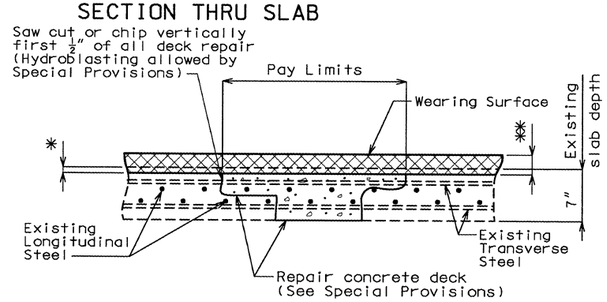


* First Scarify existing bridge deck ¼" min. and then remove any deteriorated concrete. (See Special Provisions)

** 2¼" (min.) Low Slump Concrete Wearing Surface

FULL DEPTH REPAIR IN HALF-SOLED AREA

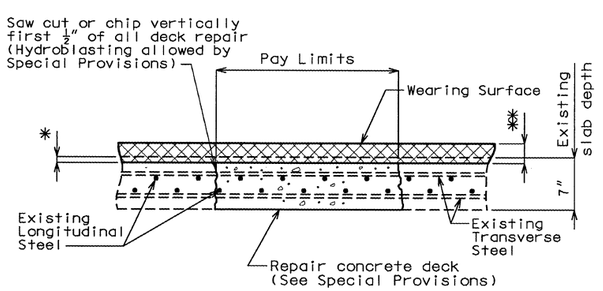


* First Scarify existing bridge deck ¼" min. and then remove any deteriorated concrete. (See Special Provisions)

** 2¼" (min.) Low Slump Concrete Wearing Surface

FULL DEPTH REPAIR

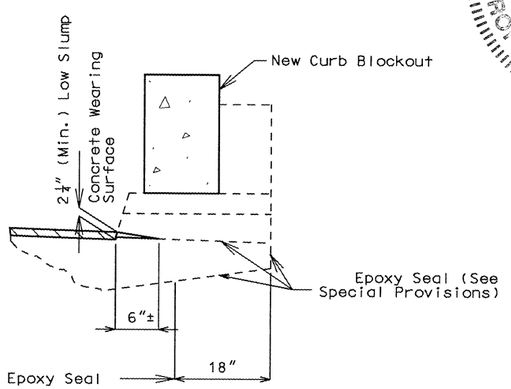


TYPICAL SECTION THRU CURB OUTLET

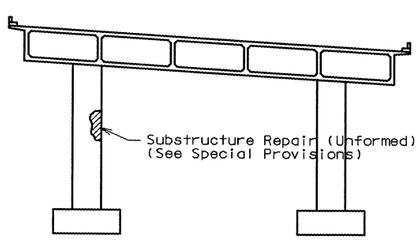


DETAIL OF INTERMEDIATE BENT SHOWING SUBSTRUCTURE REPAIR AT BENT NOS. 5 & 6

STATE OF MISSOURI
KIRSTEN MUNCK
4-25-05
NUMBER PE-2003001076
PROFESSIONAL ENGINEER

FINAL PLANS

I CERTIFY THAT THIS PLAN SHEET ACCURATELY DEPICTS THE CONFIGURATION AND LOCATION OF THE ROADWAY AND ALL ITS APPURTENANT FEATURES, TO THE BEST OF MY KNOWLEDGE, AS I AND MY STAFF HAVE OBSERVED THE CONTRACTOR'S CONSTRUCTION OF THIS PROJECT. I SPECIFICALLY DISCLAIM ANY RESPONSIBILITY FOR THE DESIGN OF THIS PROJECT, EXCEPT AS I AND MY STAFF MAY HAVE MODIFIED OR AUTHORIZED THE MODIFICATION OF THE PROJECT DESIGN DURING ITS CONSTRUCTION; AND I DISCLAIM RESPONSIBILITY FOR THE CONTRACTOR'S ACTUAL CONSTRUCTION OF THE PROJECT, EXCEPT AS I AND MY STAFF MAY HAVE DIRECTED OR ORDERED THAT THE PROJECT BE CONSTRUCTED.

Kirsten Munck — SIGNATURE
4-25-05 — DATE

Note: For General Notes & Quantities, see sheet no. 2.

REPAIRS TO BRIDGE OVER I-70 & RAMPS "G", "H" & "F"

STATE ROAD FROM RTE. 350 NORTH TO RTE. 40

ABOUT 0.5 MILE SOUTH OF RTE. 40

PROJECT NO. STA. 377+93.16± (match existing)

JOB NO . J4I0712 RTE. I-435 (NBL)

JACKSON COUNTY

Date: / /

| STD. 609.00 |
|---|
| STD. 706.35 |
| A09933 |

REV.

Designed Mar. 2002
Detailed Mar. 2002
Checked July 2002

Note: This drawing is not to scale. Follow dimensions.

Sheet No. 1 of 17



J:\PROJECTS\J4I0712\MicroStation\Bridge\J4I0712\A09933\a09933_001.dgn 12:51:57 PM 02/28/2005

| State | Proj. No. | Sheet No. |
|---|---|---|
| MO | J410712 | B50 |
| 021115-407 | I-435-1(277) | |

## FINAL QUANTITIES

| ITEM | | TOTAL |
|---|---|---|
| Asphalt Removal (Bridges) | sq. ft. | 18,990 |
| Replacement of Expansion Device and Adjacent Concrete | lin. ft. | 80 |
| Removal of Existing Bridge Rails | lin. ft. | 994 |
| Bridge Approach Slab (Bridge) | sq. yd. | 228 |
| Substructure Repair (Unformed) | sq. ft. | 28 |
| Superstructure Repair (Unformed) | sq. ft. | 2 |
| Protective Coating for Concrete Bents and Concrete Piers under Expansion Devices | lump sum | 1 |
| Curb Blockout | lin. ft. | 1023 |
| Repairing Concrete Deck (Half-Soling) | sq. ft. | 8643 |
| Full Depth Repair | sq. ft. | 342 |
| Slab Edge Repair (Bridges) | lin. ft. | 13 |
| Silica Fume Concrete Wearing Surface | sq. yd. | 2110 |
| Strip Seal Expansion Joint System | lin. ft. | 80 |
| | | |
| | | |
| | | |

Notes:

Payment for the removal and replacement of any end posts shall be included in contract unit price for Curb Blockout per lin. ft.

Removal of concrete & reinforcing at End Bent Nos. 1 and 7 shall be completely covered in the contract unit price for Replacement of Expansion Device and Adjacent Concrete per lin. ft. (See Special Provisions).

All concrete & reinforcing required for replacement of backwall, curbs and parapets necessary for placement of strip seal expansion devices at End Bent Nos. 1 & 7 shall be completely covered in the contract unit price for Replacement of Expansion Device and Adjacent Concrete per lin. ft. (See Special Provisions).

Removal of existing Bridge Approach Slabs shall be considered a Roadway Item.

FINAL PLANS

I CERTIFY THAT THIS PLAN SHEET ACCURATELY DEPICTS THE CONFIGURATION AND LOCATION OF THE ROADWAY AND ALL ITS APPURTENANT FEATURES, TO THE BEST OF MY KNOWLEDGE, AS I AND MY STAFF HAVE OBSERVED THE CONTRACTOR'S CONSTRUCTION OF THIS PROJECT. I SPECIFICALLY DISCLAIM ANY RESPONSIBILITY FOR THE DESIGN OF THIS PROJECT, EXCEPT AS I AND MY STAFF MAY HAVE MODIFIED OR AUTHORIZED THE MODIFICATION OF THE PROJECT DESIGN DURING ITS CONSTRUCTION; AND I DISCLAIM RESPONSIBILITY FOR THE CONTRACTOR'S ACTUAL CONSTRUCTION OF THE PROJECT, EXCEPT AS I AND MY STAFF MAY HAVE DIRECTED OR ORDERED THAT THE PROJECT BE CONSTRUCTED.

SIGNATURE 4-25-05 DATE

STATE OF MISSOURI
KIRSTEN MUNCK
NUMBER PE-2003001076
PROFESSIONAL ENGINEER

Detailed Mar. 2002
Checked July 2002

## General Notes:

Design Specifications:
AASHTO - 1996 and Interims thru 2000

Design Unit Stresses:
Class B-1 Concrete (Curb Blockout, Substructure Repair and Deck Repair) f'c = 4,000 psi
Reinforcing Steel (Grade 60, Epoxy Coated) fy = 60,000 psi

Joint Filler:
All joint filler shall meet the requirements of Section 1057.2.4 of the Missouri Standard Specifications, except as noted.

Reinforcing Steel:

Minimum clearance to reinforcing steel shall be 1-1/2", unless otherwise shown.

Bars bonded in old concrete not removed shall be cleanly stripped and embedded into new concrete where possible. If length is available, old bars shall extend into new concrete at least 40 diameters for smooth bars and 30 diameters for deformed bars, unless otherwise noted.

Traffic:
See Roadway plans for traffic control during construction. Bridge work to be performed in 3 stages as shown on sheet no. 3.

Curb Blockouts:
Measurement of Curb Blockout is to the nearest linear foot, measured along outside of slab for left and right curb blockouts. For limits of Curb Blockout, see sheet nos. 9 and 10.

All exposed edges of curb blockout shall have $\frac{1}{2}$" radius or $\frac{3}{8}$" bevel unless otherwise shown.

Payment for concrete, reinforcing steel, resin anchors, and any other work incidental to the Curb Blockout, complete-in-place, shall be included in the contract unit price for Curb Blockout per linear foot.

Cost of any concrete curb and parapet repair shall be considered completely covered in the contract unit price for Curb Blockout.

All reinforcement shall be epoxy coated.

Existing handrail shall be removed and will be considered the property of the contractor.

Resin Anchors:

The contractor shall use one of the resin anchor systems listed in the Job Special Provisions. These anchor systems shall be installed according to the manufacturer's specifications, except as modified by the Job Special Provisions.

Cost of furnishing and installing the anchor system complete in place shall be included in the contract unit price for Curb Blockout.

The $\frac{5}{8}$" diameter resin anchor systems shall have a minimum ultimate pullout strength of 15,500 lbs. in concrete with f'c = 4,000 psi. (See Special Provisions).

An epoxy coated #5 Grade 60 reinforcing bar shall be substituted for the $\frac{5}{8}$"Ø threaded rod stud. For shape and length of reinforcing bar, see sheet nos. 8 and 13 thru 15.

Miscellaneous:
Outline of old work is indicated by dashed lines. Heavy lines indicate new work.

Contractor shall verify all dimensions in field before ordering new material.

Roadway surfacing adjacent to bridge ends to match bridge overlay.

In order to maintain grade and a minimum thickness of overlay as shown on plans, it may be necessary to use additional quantities of overlay at various locations throughout the structure. No payment will be allowed for additional labor, materials or equipment for variations in thickness of overlay.

Contractor shall verify that bottom slab access doors at bottom of box girders and bottom of slab drains are in working condition and that work in this contract does not impair their function (see original plans for details). Cost shall be considered incidental to other pay items.



Note: This drawing is not to scale. Follow dimensions.



JACKSON COUNTY A09933 REV.

| State | Proj. No. | Sheet No. |
|---|---|---|
| MO | J4I0712 | B51 |
| 021115-407 | I-435-1(277) | |

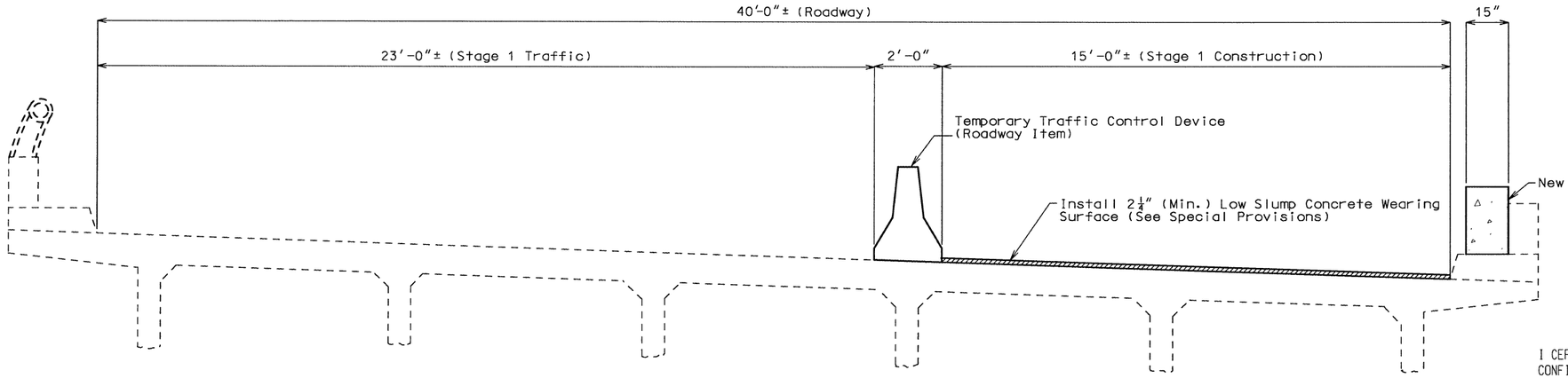


STAGE 1 CONSTRUCTION

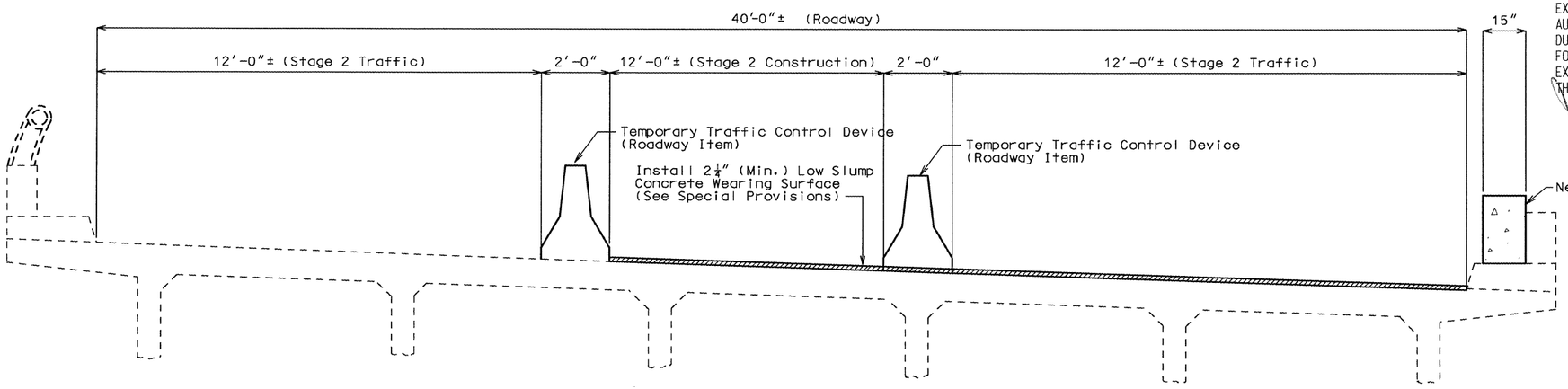


STAGE 2 CONSTRUCTION

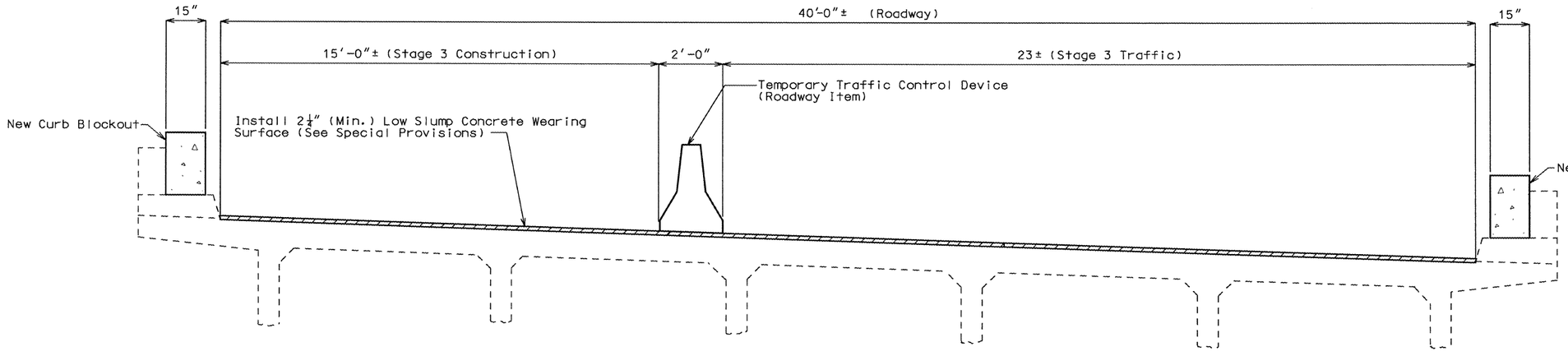


STAGE 3 CONSTRUCTION

## FINAL PLANS

I CERTIFY THAT THIS PLAN SHEET ACCURATELY DEPICTS THE CONFIGURATION AND LOCATION OF THE ROADWAY AND ALL ITS APPURTENANT FEATURES, TO THE BEST OF MY KNOWLEDGE, AS I AND MY STAFF HAVE OBSERVED THE CONTRACTOR'S CONSTRUCTION OF THIS PROJECT. I SPECIFICALLY DISCLAIM ANY RESPONSIBILITY FOR THE DESIGN OF THIS PROJECT, EXCEPT AS I AND MY STAFF MAY HAVE MODIFIED OR AUTHORIZED THE MODIFICATION OF THE PROJECT DESIGN DURING ITS CONSTRUCTION; AND I DISCLAIM RESPONSIBILITY FOR THE CONTRACTOR'S ACTUAL CONSTRUCTION OF THE PROJECT, EXCEPT AS I AND MY STAFF MAY HAVE DIRECTED OR ORDERED THAT THE PROJECT BE CONSTRUCTED.

SIGNATURE

4-25-05
DATE

STATE OF MISSOURI
KIRSTEN MUNCK
4-25-05
NUMBER PE-2003001076
PROFESSIONAL ENGINEER

Detailed Mar. 2002
Checked July 2002

Note: This drawing is not to scale. Follow dimensions.



JACKSON COUNTY A09933

REV.



J:\PROJECTS\J4I0712\MicroStation\Bridge\J4I0712\A09933\a09933_003.dgn 07:43:43 AM 02/28/2005

| State | Proj. No. | Sheet No. |
|---|---|---|
| MO | J4I0712 | B52 |
| 021115-407 | I-435-1(277) | |

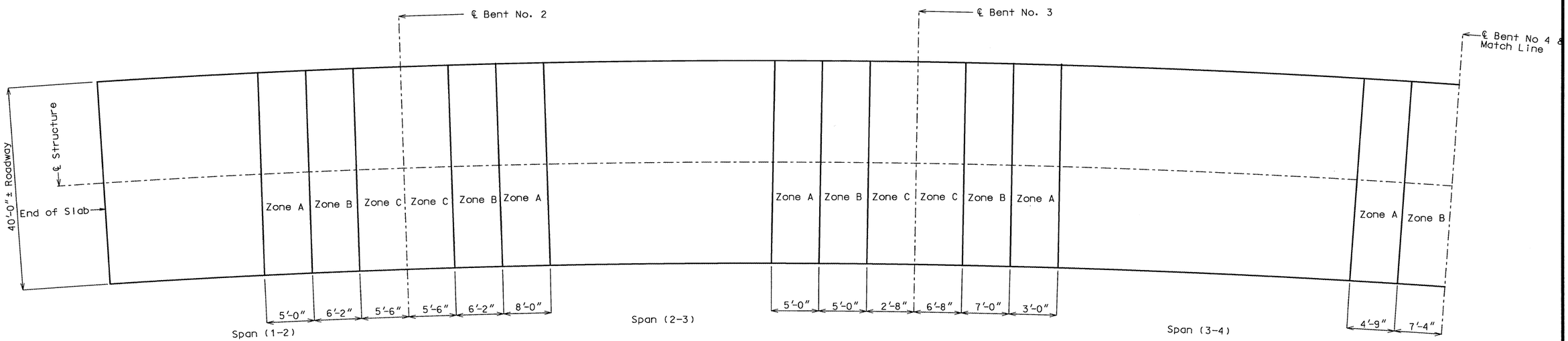


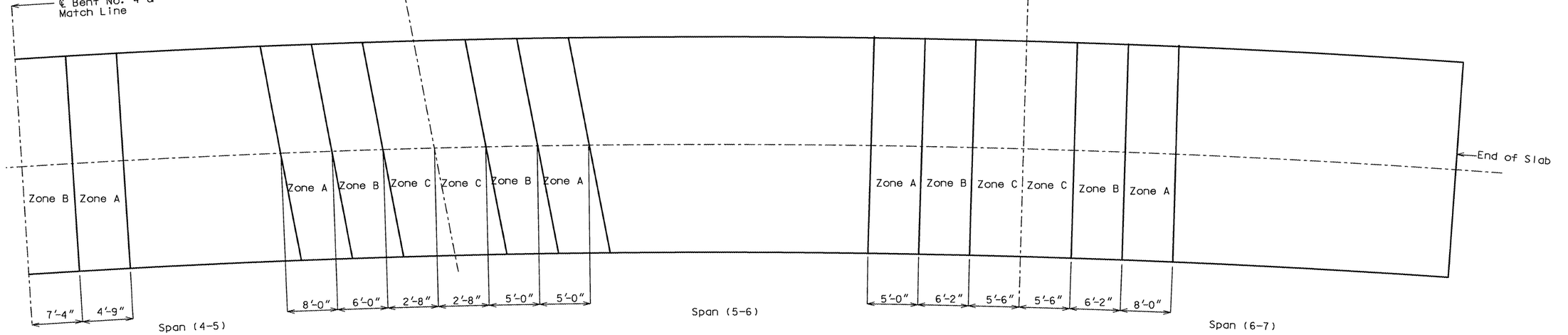


## PLAN OF SLAB SHOWING SPECIAL REPAIR ZONES

Note: Zones with the same letter designation may be repaired at the same time. Sequence of repairs follows Zone A, Zone B then Zone C.
Any repair in the remainder of the bridge that is within 42" of Zone A shall be completed before removing old concrete in Zone A.

STATE OF MISSOURI
KIRSTEN MUNCK
NUMBER PE-2003001076
PROFESSIONAL ENGINEER

FINAL PLANS

I CERTIFY THAT THIS PLAN SHEET ACCURATELY DEPICTS THE CONFIGURATION AND LOCATION OF THE ROADWAY AND ALL ITS APPURTENANT FEATURES, TO THE BEST OF MY KNOWLEDGE, AS I AND MY STAFF HAVE OBSERVED THE CONTRACTOR'S CONSTRUCTION OF THIS PROJECT. I SPECIFICALLY DISCLAIM ANY RESPONSIBILITY FOR THE DESIGN OF THIS PROJECT, EXCEPT AS I AND MY STAFF MAY HAVE MODIFIED OR AUTHORIZED THE MODIFICATION OF THE PROJECT DESIGN DURING ITS CONSTRUCTION; AND I DISCLAIM RESPONSIBILITY FOR THE CONTRACTOR'S ACTUAL CONSTRUCTION OF THE PROJECT, EXCEPT AS I AND MY STAFF MAY HAVE DIRECTED OR ORDERED THAT THE PROJECT BE CONSTRUCTED.

SIGNATURE 42305 DATE



Detailed Mar. 2002
Checked July 2002

Note: This drawing is not to scale. Follow dimensions.



JACKSON COUNTY A09933 REV.

J:\PROJECTS\J4I0712\MicroStation\Bridge\J4I0712\A09933\a09933_004.dgn 07:43:44 AM 02/28/2005

| State | Proj. No. | | Sheet No. |
|---|---|---|---|
| MO | J4I0712 | | B53 |
| 021115-407 | | I-435-1(277) | |

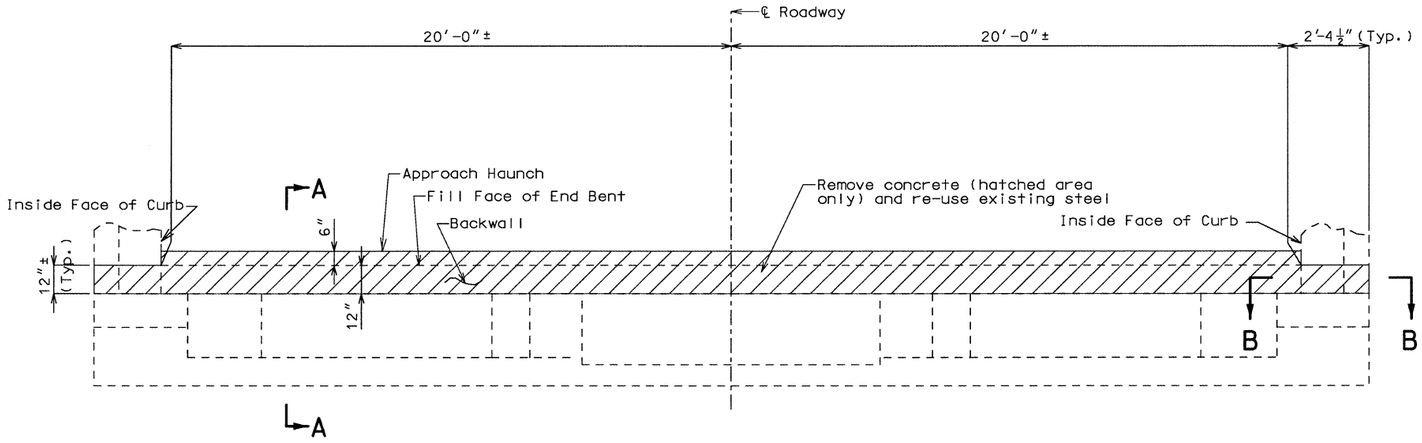


PART PLAN OF END BENT SHOWING EXISTING CONCRETE REMOVAL

(Construction staging is not shown, but shall be consistent with that shown on sheet no. 3)

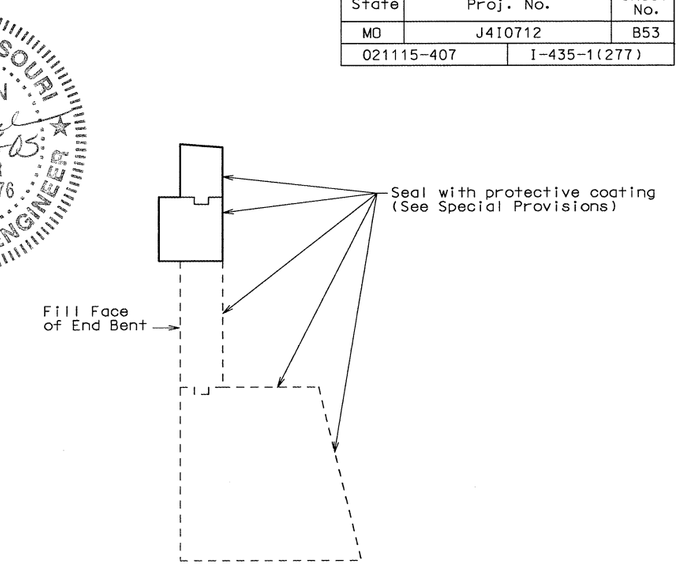


SECTION THRU END BENT SHOWING PROTECTIVE COATING LIMITS

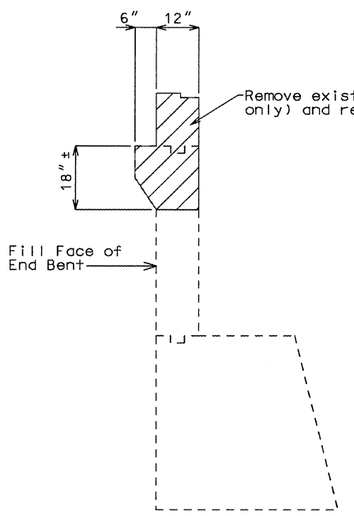


SECTION A–A
(SHOWING EXISTING CONCRETE REMOVAL)

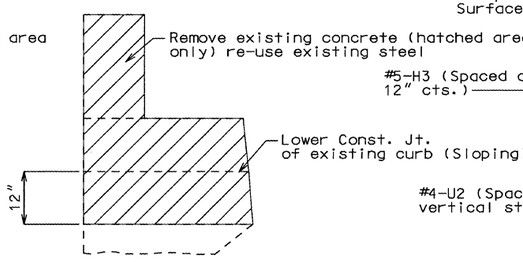


SECTION B–B
(SHOWING EXISTING CONCRETE REMOVAL)

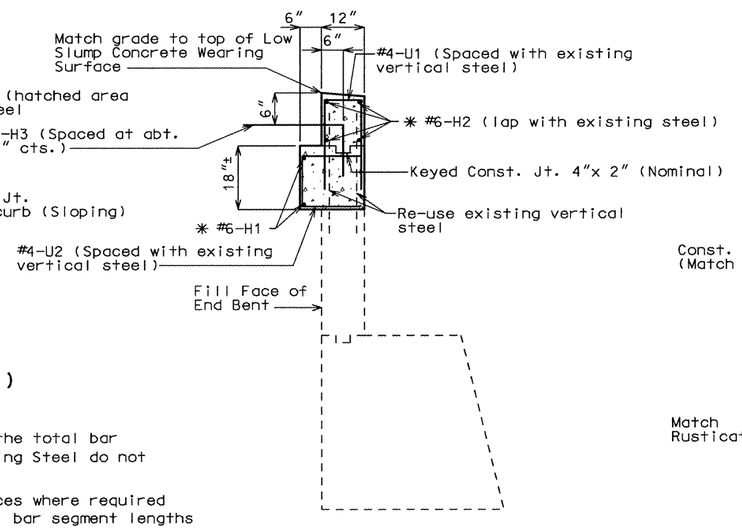


SECTION A–A
(SHOWING CONCRETE REPLACEMENT)

Note: For expansion device placement in backwall, see sheet nos. 6 & 7.

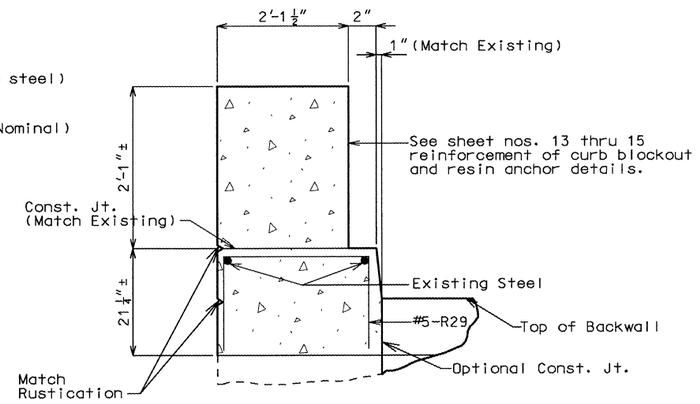


SECTION B–B
(SHOWING CONCRETE REPLACEMENT)

✱ The H1 and H2 bars shall be segmented bars. the total bar lengths for H-bars shown in Bill of Reinforcing Steel do not allow for staging.

The contractor shall use mechanical bar splices where required for placement of #6-H1 and H2 bars and actual bar segment lengths will be determined based upon manufacturers recommendations of installation and stage construction.

The cost of furnishing and installing the bar splices shall be included in the contract unit price for other items.

See Job Special Provisions for additional requirements of mechanical bar splices. Mechanical bar splices for epoxy coated bars shall be epoxy coated.

Notes: Concrete for replacement shall be Class B-1.
For details of strip seal expansion device replacement, see sheet nos. 6 and 7.

Payment for removal and replacement of curb and parapets shall be completely covered in the contract unit price for Replacement of Expansion Device and Ajacent Concrete (See Special Provisions).

All new reinforcing steel shall be epoxy coated.

FINAL PLANS

I CERTIFY THAT THIS PLAN SHEET ACCURATELY DEPICTS THE CONFIGURATION AND LOCATION OF THE ROADWAY AND ALL ITS APPURTENANT FEATURES, TO THE BEST OF MY KNOWLEDGE, AS I AND MY STAFF HAVE OBSERVED THE CONTRACTOR'S CONSTRUCTION OF THIS PROJECT. I SPECIFICALLY DISCLAIM ANY RESPONSIBILITY FOR THE DESIGN OF THIS PROJECT, EXCEPT AS I AND MY STAFF MAY HAVE MODIFIED OR AUTHORIZED THE MODIFICATION OF THE PROJECT DESIGN DURING ITS CONSTRUCTION; AND I DISCLAIM RESPONSIBILITY FOR THE CONTRACTOR'S ACTUAL CONSTRUCTION OF THE PROJECT, EXCEPT AS I AND MY STAFF MAY HAVE DIRECTED OR ORDERED THAT THE PROJECT BE CONSTRUCTED.

SIGNATURE 4-25-05 DATE

STATE OF MISSOURI KIRSTEN MUNOK NUMBER PE-2003001076 PROFESSIONAL ENGINEER

# TYPICAL DETAILS FOR END BENT NOS. 1 & 7

Detailed Mar. 2002
Checked July 2002

Note: This drawing is not to scale. Follow dimensions.



J:\PROJECTS\J410712\MicroStation\Bridge\J410712\A09933\a09933_005.dgn 07:43:44 AM 02/28/2005

| State | Proj. No. | Sheet No. |
|---|---|---|
| MO | J4I0712 | B54 |
| 021115-407 | I-435-1(277) | |

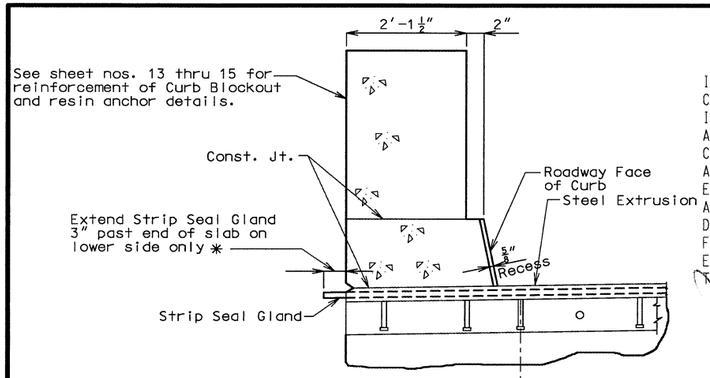


*Note: Provide splash protection for erosion control on finish ground line if required by the engineer (Roadway Item).

¾"Ø x 8" Long Welded Shear Connector Studs Spaced alternately at abt. 9" cts.

## PART SECTION D-D

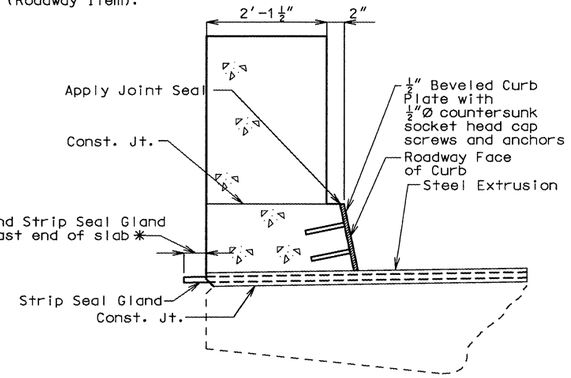


## PART SECTION E-E (SHOWING CONCRETE REPLACEMENT)

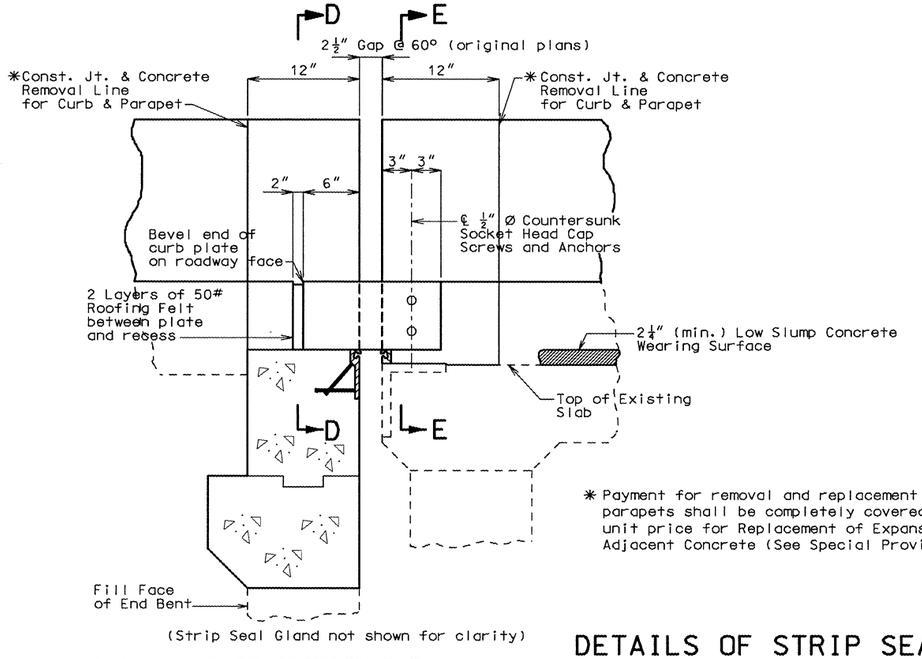


(Strip Seal Gland not shown for clarity)

## PART SECTION B-B


FINAL PLANS

I CERTIFY THAT THIS PLAN SHEET ACCURATELY DEPICTS THE CONFIGURATION AND LOCATION OF THE ROADWAY AND ALL ITS APPURTENANT FEATURES, TO THE BEST OF MY KNOWLEDGE, AS I AND MY STAFF HAVE OBSERVED THE CONTRACTOR'S CONSTRUCTION OF THIS PROJECT. I SPECIFICALLY DISCLAIM ANY RESPONSIBILITY FOR THE DESIGN OF THIS PROJECT, EXCEPT AS I AND MY STAFF MAY HAVE MODIFIED OR AUTHORIZED THE MODIFICATION OF THE PROJECT DESIGN DURING ITS CONSTRUCTION; AND I DISCLAIM RESPONSIBILITY FOR THE CONTRACTOR'S ACTUAL CONSTRUCTION OF THE PROJECT, EXCEPT AS I AND MY STAFF MAY HAVE DIRECTED OR ORDERED THAT THE PROJECT BE CONSTRUCTED.

SIGNATURE 4-25-05 DATE


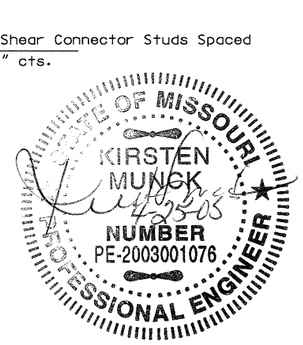

## DETAIL OF GLAND

Note: Use single layer gland, no multiple layer glands allowed.

Strip seal gland size = 4"

## STRIP SEAL GLAND

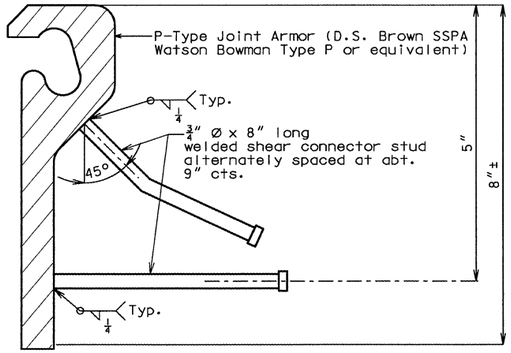


## DETAIL OF STEEL EXTRUSION IN BACKWALL OF END BENT

## DETAIL OF STEEL EXTRUSION ON EXISTING SLAB

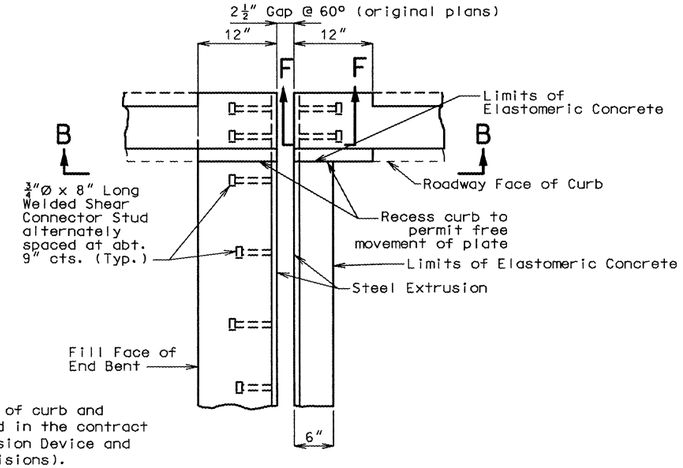


* Payment for removal and replacement of curb and parapets shall be completely covered in the contract unit price for Replacement of Expansion Device and Adjacent Concrete (See Special Provisions).

## PART PLAN

## NOTE:

The expansion device shall be fabricated and installed in accordance with the recommendations of the manufacturer, and as set forth in the Special Provisions.

The contractor shall verify all dimensions prior to fabrication.

Splices of steel extrusion shall develop full strength.

All steel shall be ASTM A709 Grade 36, except steel extrusions shall be ASTM A709 Grade 50W or Grade 36.

Neoprene Strip Seal shall meet ASTM D-2628.

Anchors for the extrusions or armor shall be approved welded studs (C1010 thru C1020).

All welds shall conform to Section 712 of the Missouri Standard Specifications.

Concrete shall be forced under and around strip seal extrusions and studs. Proper consolidation of the concrete shall be achieved by localized internal vibration.

Plan dimensions are based on installation at 60°F. The gap shall be increased $\frac{1}{16}$" for each 10° fall in temperature and decreased $\frac{1}{16}$" for each 10° rise in temperature from the installation temperature.

Longitudinal reinforcing steel shall be placed so that ends shall not be more than 1"± from vertical leg of extrusion at Expansion Device.

Structural steel for the expansion device shall be coated with a minimum of two coats of inorganic zinc primer (5 mils minimum). Anchors need not be protected from overspray.

Payment for furnishing, coating and placing steel extrusions, miscellaneous structural steel, and neoprene strip seal shall be made under the contract unit price for Strip Seal Expansion Joint System per lin. ft.

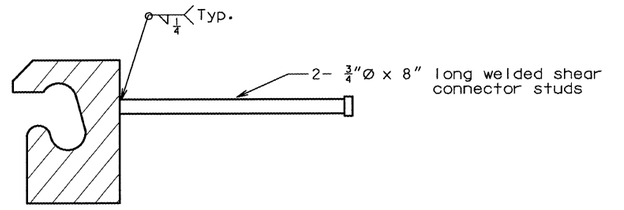


Note: Shift existing reinforcement in curb to clear studs.

## PART SECTION F-F

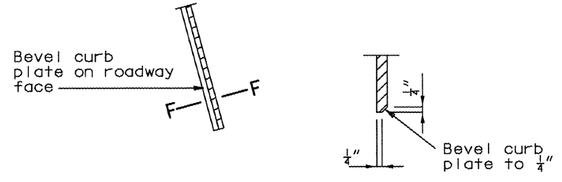


AT END OF BEVELED CURB PLATE

SECTION F-F

Detailed Apr. 2002
Checked July 2002

# DETAILS OF STRIP SEAL EXPANSION DEVICE REPLACEMENT AT END BENTS

| State | Proj. No. | Sheet No. |
|---|---|---|
| MO | J4I0712 | B55 |
| 021115-407 | I-435-1(277) | |

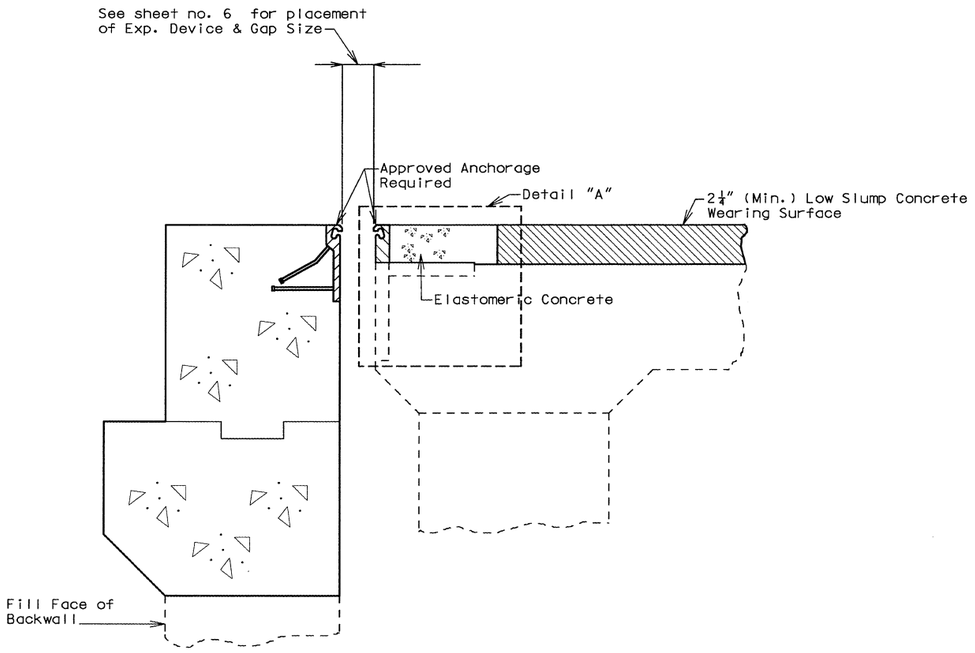


PART SECTION THRU END OF SLAB
AT BENT NO. 1

Note: Bent No. 7 similar.

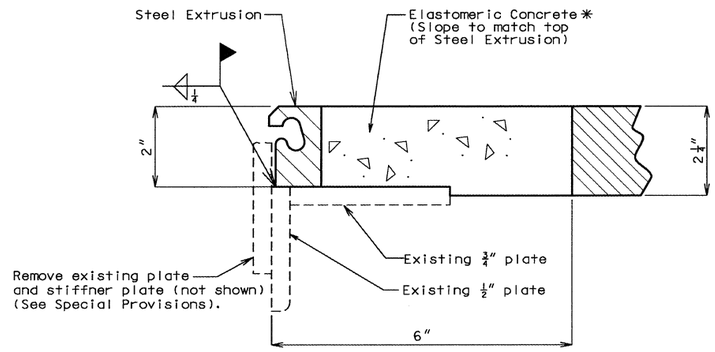


DETAIL "A"

* Submit manufacturer's specifications and installation requirements to the engineer for approval.

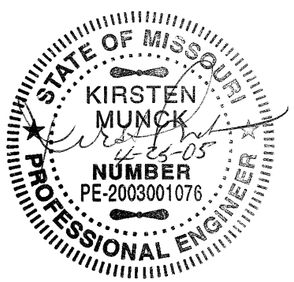


FINAL PLANS

I CERTIFY THAT THIS PLAN SHEET ACCURATELY DEPICTS THE CONFIGURATION AND LOCATION OF THE ROADWAY AND ALL ITS APPURTENANT FEATURES, TO THE BEST OF MY KNOWLEDGE, AS I AND MY STAFF HAVE OBSERVED THE CONTRACTOR'S CONSTRUCTION OF THIS PROJECT. I SPECIFICALLY DISCLAIM ANY RESPONSIBILITY FOR THE DESIGN OF THIS PROJECT, EXCEPT AS I AND MY STAFF MAY HAVE MODIFIED OR AUTHORIZED THE MODIFICATION OF THE PROJECT DESIGN DURING ITS CONSTRUCTION; AND I DISCLAIM RESPONSIBILITY FOR THE CONTRACTOR'S ACTUAL CONSTRUCTION OF THE PROJECT, EXCEPT AS I AND MY STAFF MAY HAVE DIRECTED OR ORDERED THAT THE PROJECT BE CONSTRUCTED.

SIGNATURE 4-25-05 DATE

# DETAILS OF STRIP SEAL EXPANSION DEVICE AT END BENTS

Detailed Apr. 2002
Checked July 2002

Note: This drawing is not to scale. Follow dimensions.



JACKSON COUNTY A09933

REV.



J:\PROJECTS\J4I0712\MicroStation\Bridge\J4I0712\A09933\a09933_007.dgn 07:43:46 AM 02/28/2005

| STATE | PROJ. NO. | SHEET NO. |
|---|---|---|
| MO | J4I0712 | B56 |
| 021115-407 | I-435-1(277) | |

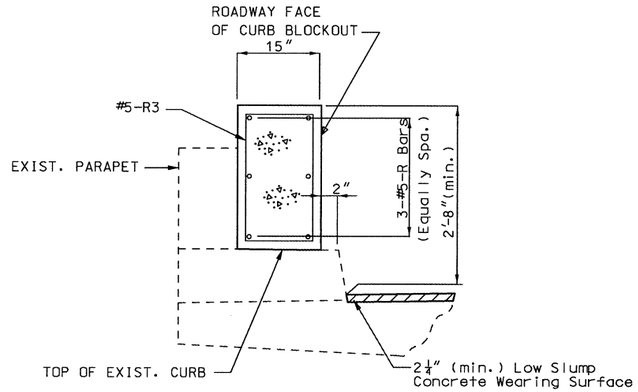


TYPICAL SECTION THRU CURB
BLOCKOUT SHOWING REINFORCEMENT

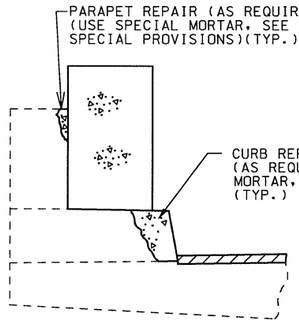


TYPICAL SECTION THRU CURB BLOCKOUT
SHOWING CONCRETE CURB & PARAPET REPAIR

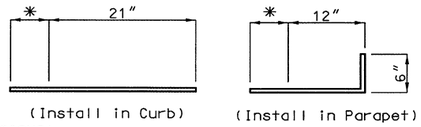


## DETAILS OF RESIN ANCHORS AT 15" CURB BLOCKOUTS

* Manufacturer's embedment depth but no greater than 5" in Exist. Parapet and no greater than 7" in Exist. Curb (4" over curb outlets).

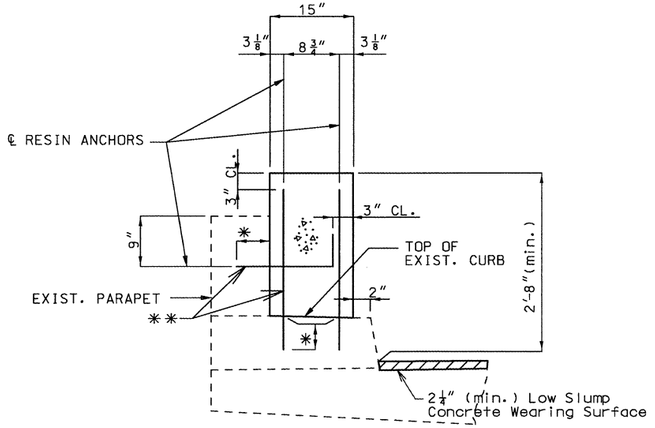


TYPICAL SECTION THRU CURB
BLOCKOUT SHOWING RESIN ANCHORS

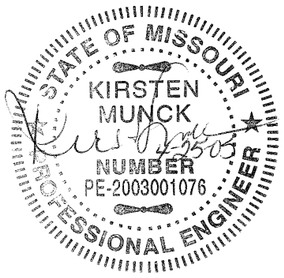


FINAL PLANS

I CERTIFY THAT THIS PLAN SHEET ACCURATELY DEPICTS THE CONFIGURATION AND LOCATION OF THE ROADWAY AND ALL ITS APPURTENANT FEATURES, TO THE BEST OF MY KNOWLEDGE, AS I AND MY STAFF HAVE OBSERVED THE CONTRACTOR'S CONSTRUCTION OF THIS PROJECT. I SPECIFICALLY DISCLAIM ANY RESPONSIBILITY FOR THE DESIGN OF THIS PROJECT, EXCEPT AS I AND MY STAFF MAY HAVE MODIFIED OR AUTHORIZED THE MODIFICATION OF THE PROJECT DESIGN DURING ITS CONSTRUCTION; AND I DISCLAIM RESPONSIBILITY FOR THE CONTRACTOR'S ACTUAL CONSTRUCTION OF THE PROJECT, EXCEPT AS I AND MY STAFF MAY HAVE DIRECTED OR ORDERED THAT THE PROJECT BE CONSTRUCTED.

SIGNATURE 4-25-05 DATE

** Resin anchors spaced with alternating pattern of abt. 12" cts.

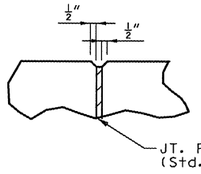


FILLED JOINT DETAIL

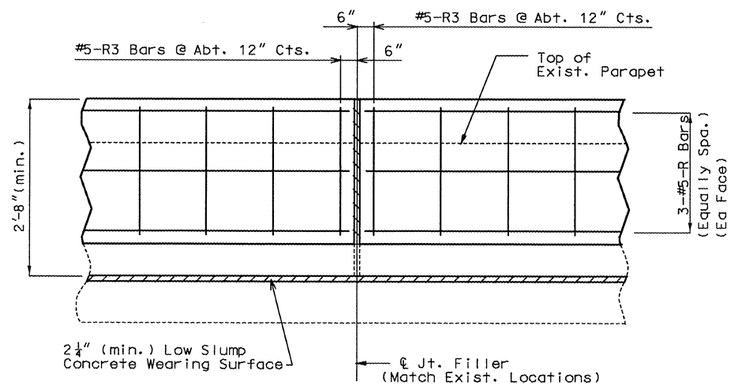


PART ELEVATION OF CURB BLOCKOUT SHOWING REINFORCEMENT

**NOTES FOR CURB BLOCKOUT:**

Concrete in curb blockout shall be Class B-1.

Measurement of the concrete Curb Blockout is to the nearest linear foot, measured along the inside face of existing parapet from end of wing to end of wing.

All exposed edges of curb blockout shall have ½" radius or ⅜" bevel unless otherwise shown.

Payment for concrete, reinforcing steel, resin anchors and any other work incidental to the curb blockout complete in place shall be included in the contract unit price for Curb Blockout.

Cost of any concrete curb & parapet repair shall be considered completely covered in the contract unit price for Curb Blockout.

Use a minimum lap of 3'-0" for #5 horizontal Curb Blockout bars where necessary.

The cross-sectional area of the Curb Blockout above top of existing curb = 2.59± sq. ft.

Provide or maintain access to existing active conduit systems and junction boxes.

Shift reinforcing steel in field where necessary to clear access openings for existing active junction boxes and conduit systems.

Match locations of existing filled joints.

Longitudinal reinforcing steel shall be field cut to required length between filled joints.

All reinforcing shall be epoxy coated.

Contractor shall prevent damage to existing conduit at light support standards or elsewhere on bridge. (See Special Provisions).

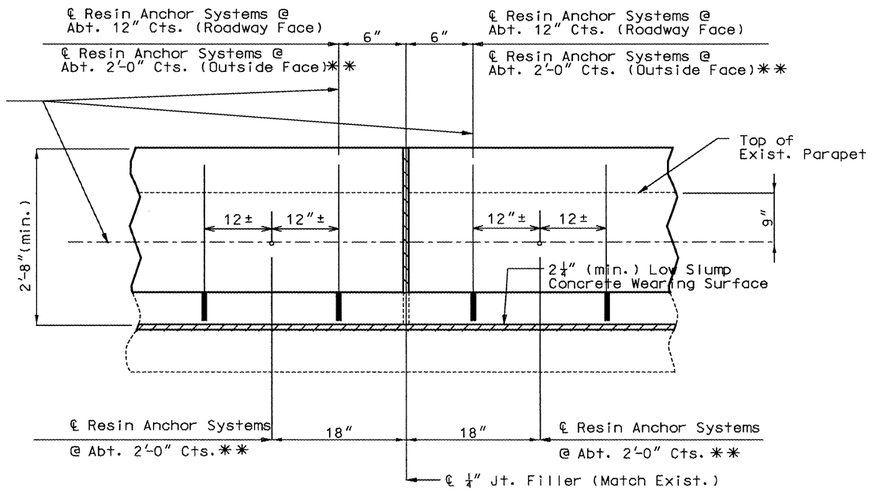


PART SECTION OF CURB BLOCKOUT SHOWING RESIN ANCHORS

# TYPICAL DETAILS OF CURB BLOCKOUT

DETAILED Mar. 2002
CHECKED July 2002

NOTE: THIS DRAWING IS NOT TO SCALE. FOLLOW DIMENSIONS.

SHEET NO. 8 OF 17

JACKSON COUNTY

A09933

| STATE | PROJ. NO. | SHEET NO. |
|---|---|---|
| MO | J4I0712 | B57 |
| 021115-407 | I-435-1(277) | |

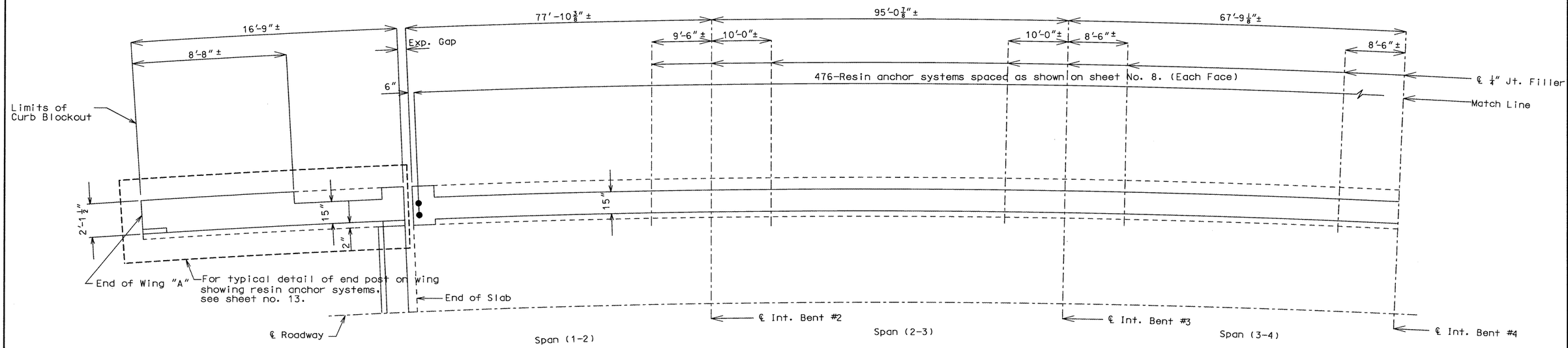


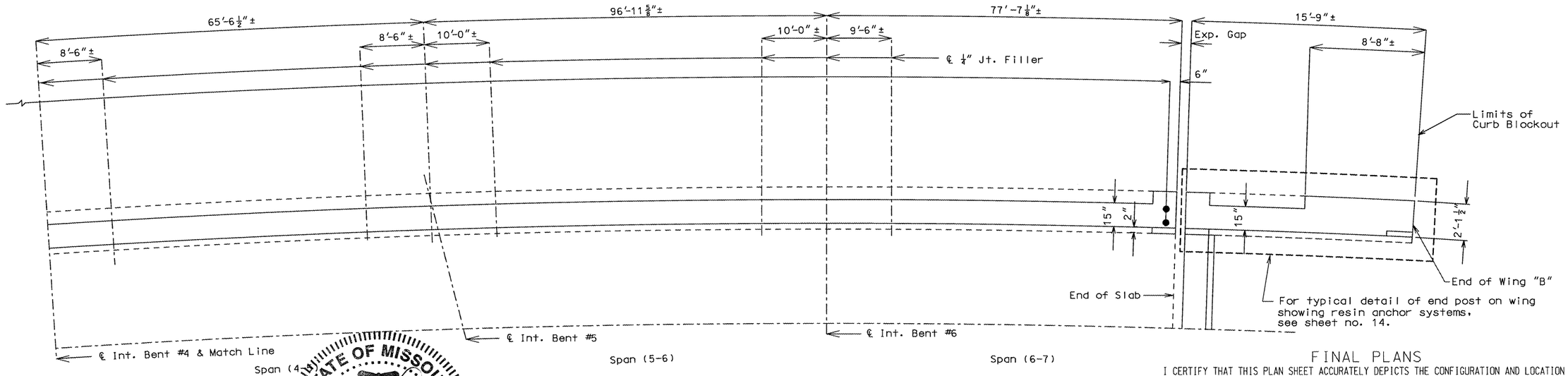


Note: Longitudinal dimensions shown are along ℄ parapet.
Match existing curb joints.
For details of resin anchor systems not shown, see sheet no. 8.

## PLAN OF LEFT CURB BLOCKOUT SHOWING RESIN ANCHOR SPACING

STATE OF MISSOURI
KIRSTEN MUNCK
NUMBER PE-2003001076
PROFESSIONAL ENGINEER

### FINAL PLANS

I CERTIFY THAT THIS PLAN SHEET ACCURATELY DEPICTS THE CONFIGURATION AND LOCATION OF THE ROADWAY AND ALL ITS APPURTENANT FEATURES, TO THE BEST OF MY KNOWLEDGE, AS I AND MY STAFF HAVE OBSERVED THE CONTRACTOR'S CONSTRUCTION OF THIS PROJECT. I SPECIFICALLY DISCLAIM ANY RESPONSIBILITY FOR THE DESIGN OF THIS PROJECT, EXCEPT AS I AND MY STAFF MAY HAVE MODIFIED OR AUTHORIZED THE MODIFICATION OF THE PROJECT DESIGN DURING ITS CONSTRUCTION; AND I DISCLAIM RESPONSIBILITY FOR THE CONTRACTOR'S ACTUAL CONSTRUCTION OF THE PROJECT, EXCEPT AS I AND MY STAFF MAY HAVE DIRECTED OR ORDERED THAT THE PROJECT BE CONSTRUCTED.

Kurt Druck 4-25-03
SIGNATURE DATE



DETAILED MAR. 2002
CHECKED July 2002

NOTE: THIS DRAWING IS NOT TO SCALE. FOLLOW DIMENSIONS.



JACKSON COUNTY

A09933

| STATE | PROJ. NO. | SHEET NO. |
|---|---|---|
| MO | J4I0712 | B58 |
| 021115-407 | I-435-1(277) | |

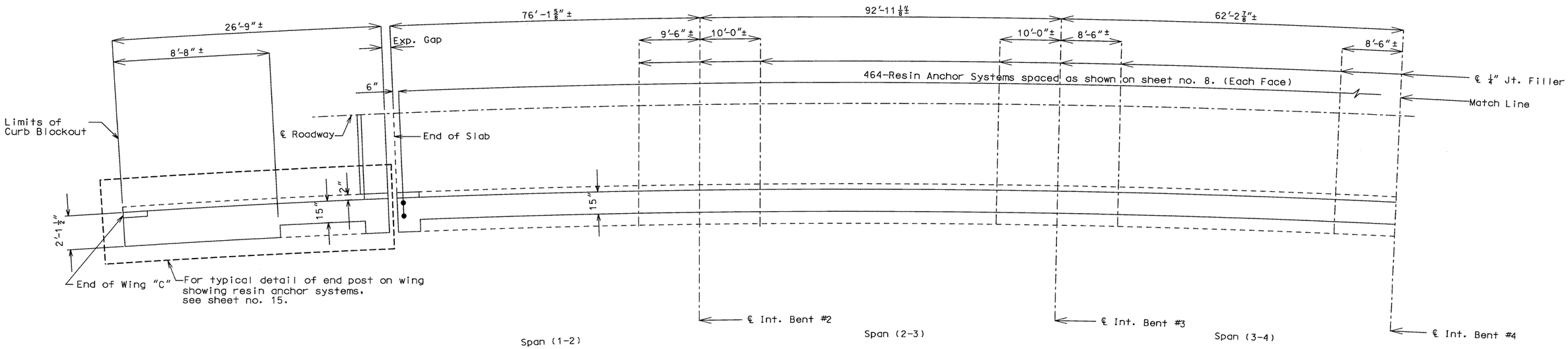


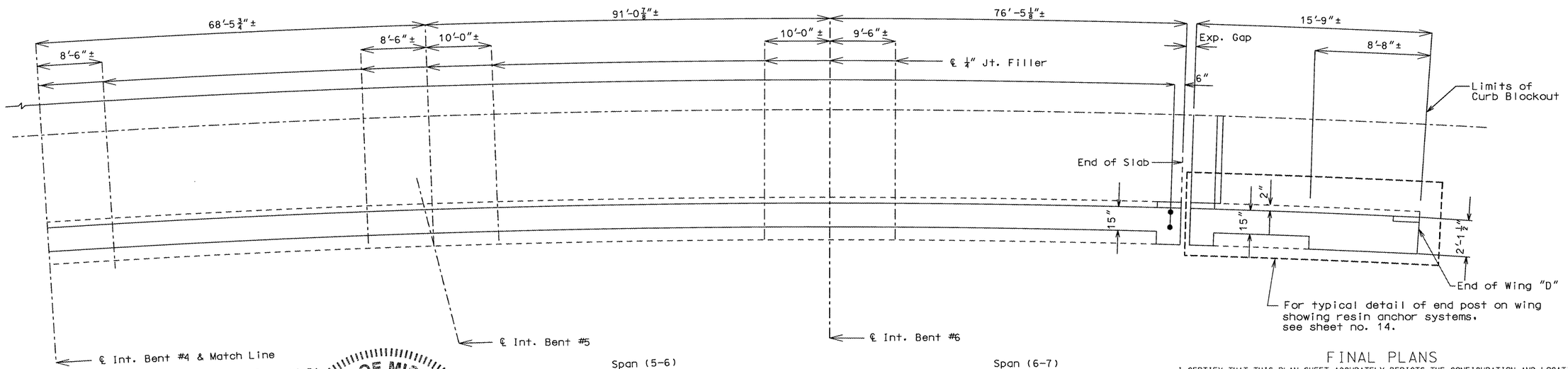


Note: Longitudinal dimensions shown are along ℄ parapet.
Match existing curb joints.
For details of resin anchor systems not shown, see sheet no. 8.

## PLAN OF RIGHT CURB BLOCKOUT SHOWING RESIN ANCHOR SPACING

FINAL PLANS

I CERTIFY THAT THIS PLAN SHEET ACCURATELY DEPICTS THE CONFIGURATION AND LOCATION OF THE ROADWAY AND ALL ITS APPURTENANT FEATURES, TO THE BEST OF MY KNOWLEDGE, AS I AND MY STAFF HAVE OBSERVED THE CONTRACTOR'S CONSTRUCTION OF THIS PROJECT. I SPECIFICALLY DISCLAIM ANY RESPONSIBILITY FOR THE DESIGN OF THIS PROJECT, EXCEPT AS I AND MY STAFF MAY HAVE MODIFIED OR AUTHORIZED THE MODIFICATION OF THE PROJECT DESIGN DURING ITS CONSTRUCTION; AND I DISCLAIM RESPONSIBILITY FOR THE CONTRACTOR'S ACTUAL CONSTRUCTION OF THE PROJECT, EXCEPT AS I AND MY STAFF MAY HAVE DIRECTED OR ORDERED THAT THE PROJECT BE CONSTRUCTED.

SIGNATURE 4-25-05 DATE

STATE OF MISSOURI
KIRSTEN MUNCK
NUMBER PE-2003001076
PROFESSIONAL ENGINEER



DETAILED MAR. 2002
CHECKED July 2002

NOTE: THIS DRAWING IS NOT TO SCALE. FOLLOW DIMENSIONS.



JACKSON COUNTY

A09933

| STATE | PROJ. NO. | SHEET NO. |
|---|---|---|
| MO | J4I0712 | B59 |
| 021115-407 | I-435-1(277) | |

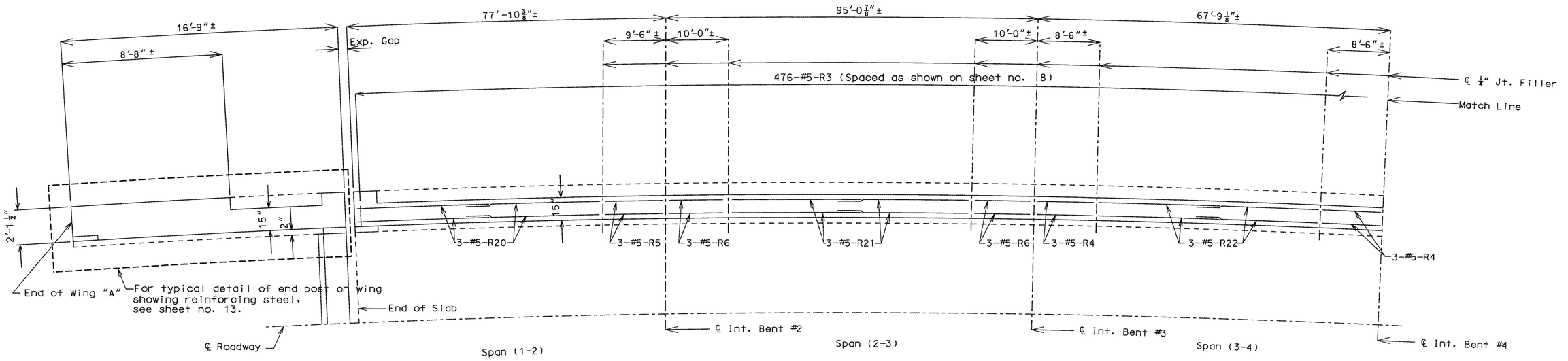


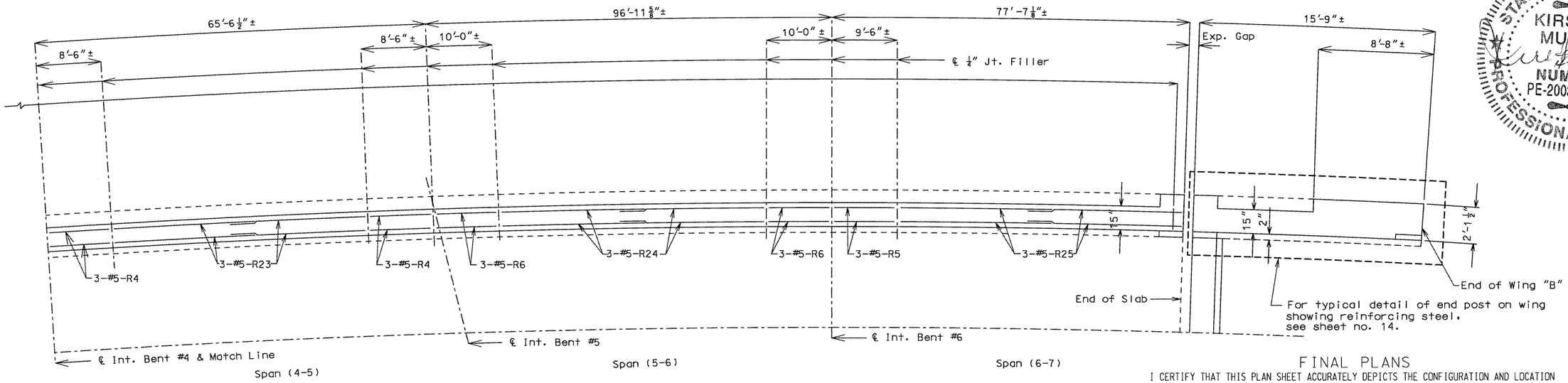


Note: Longitudinal dimensions shown are along ℄ parapet.
Match existing curb joints.
For details of reinforcing steel not shown, see sheet no. 8.
Use a minimum lap of 3'-0" for #5-R horizontal curb blockout bars.

## PLAN OF LEFT CURB BLOCKOUT SHOWING REINFORCING STEEL

STATE OF MISSOURI
KIRSTEN MUNCK
4-25-15
NUMBER PE-2003001076
PROFESSIONAL ENGINEER

FINAL PLANS

I CERTIFY THAT THIS PLAN SHEET ACCURATELY DEPICTS THE CONFIGURATION AND LOCATION OF THE ROADWAY AND ALL ITS APPURTENANT FEATURES, TO THE BEST OF MY KNOWLEDGE, AS I AND MY STAFF HAVE OBSERVED THE CONTRACTOR'S CONSTRUCTION OF THIS PROJECT. I SPECIFICALLY DISCLAIM ANY RESPONSIBILITY FOR THE DESIGN OF THIS PROJECT, EXCEPT AS I AND MY STAFF MAY HAVE MODIFIED OR AUTHORIZED THE MODIFICATION OF THE PROJECT DESIGN DURING ITS CONSTRUCTION; AND I DISCLAIM RESPONSIBILITY FOR THE CONTRACTOR'S ACTUAL CONSTRUCTION OF THE PROJECT, EXCEPT AS I AND MY STAFF MAY HAVE DIRECTED OR ORDERED THAT THE PROJECT BE CONSTRUCTED.

SIGNATURE 4/25/15 DATE



DETAILED MAR. 2002
CHECKED July 2002

NOTE: THIS DRAWING IS NOT TO SCALE. FOLLOW DIMENSIONS.



JACKSON COUNTY

A09933

| STATE | PROJ. NO. | SHEET NO. |
|---|---|---|
| MO | J4I0712 | B60 |
| 021115-407 | I-435-1(277) | |

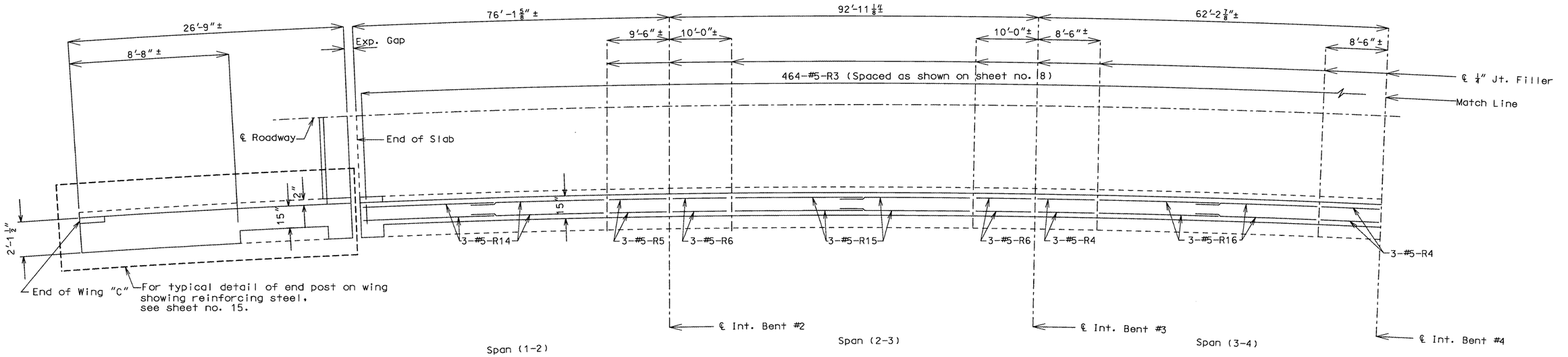


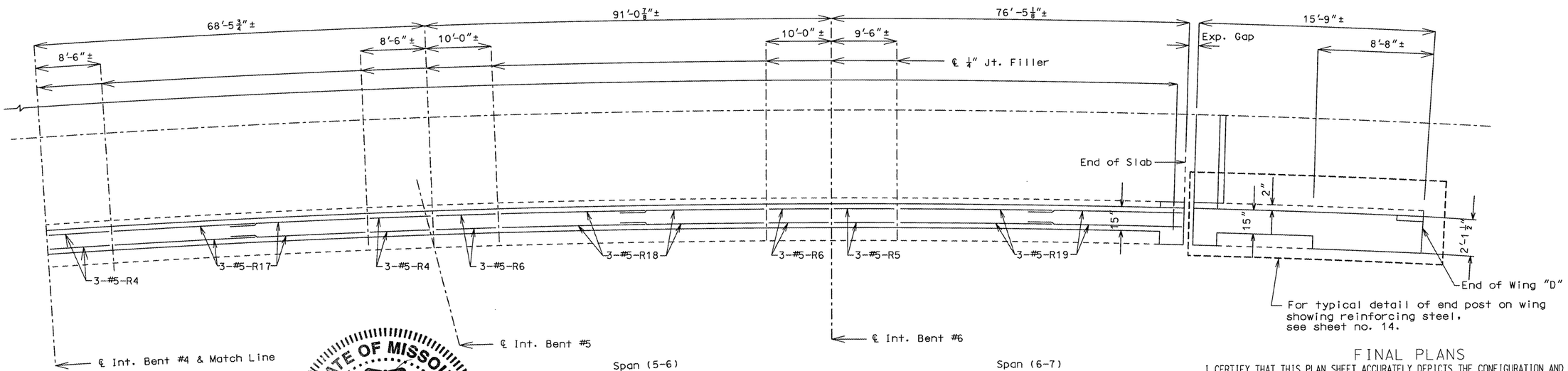


Note: Longitudinal dimensions shown are along ℄ parapet.
Match existing curb joints.
For details of reinforcing steel not shown see sheet no. 8.
Use a minimum lap of 3'-0" for #5-R horizontal curb blockout bars.

blockout bars.

PLAN OF RIGHT CURB BLOCKOUT SHOWING REINFORCING STEEL

STATE OF MISSOURI
KIRSTEN MUNCK
4-25-05
NUMBER PE-2003001076
PROFESSIONAL ENGINEER

FINAL PLANS

I CERTIFY THAT THIS PLAN SHEET ACCURATELY DEPICTS THE CONFIGURATION AND LOCATION OF THE ROADWAY AND ALL ITS APPURTENANT FEATURES. TO THE BEST OF MY KNOWLEDGE, AS I AND MY STAFF HAVE OBSERVED THE CONTRACTOR'S CONSTRUCTION OF THIS PROJECT. I SPECIFICALLY DISCLAIM ANY RESPONSIBILITY FOR THE DESIGN OF THIS PROJECT. EXCEPT AS I AND MY STAFF MAY HAVE MODIFIED OR AUTHORIZED THE MODIFICATION OF THE PROJECT DESIGN DURING ITS CONSTRUCTION; AND I DISCLAIM RESPONSIBILITY FOR THE CONTRACTOR'S ACTUAL CONSTRUCTION OF THE PROJECT, EXCEPT AS I AND MY STAFF MAY HAVE DIRECTED OR ORDERED THAT THE PROJECT BE CONSTRUCTED.

SIGNATURE 4-25-05 DATE



DETAILED MAR. 2002
CHECKED July 2002

NOTE: THIS DRAWING IS NOT TO SCALE. FOLLOW DIMENSIONS.



JACKSON COUNTY A09933

FINAL PLANS

I CERTIFY THAT THIS PLAN SHEET ACCURATELY DEPICTS THE CONFIGURATION AND LOCATION OF THE ROADWAY AND ALL ITS APPURTENANT FEATURES, TO THE BEST OF MY KNOWLEDGE, AS I AND MY STAFF HAVE OBSERVED THE CONTRACTOR'S CONSTRUCTION OF THIS PROJECT. I SPECIFICALLY DISCLAIM ANY RESPONSIBILITY FOR THE DESIGN OF THIS PROJECT, EXCEPT AS I AND MY STAFF MAY HAVE MODIFIED OR AUTHORIZED THE MODIFICATION OF THE PROJECT DESIGN DURING ITS CONSTRUCTION; AND I DISCLAIM RESPONSIBILITY FOR THE CONTRACTOR'S ACTUAL CONSTRUCTION OF THE PROJECT, EXCEPT AS I AND MY STAFF MAY HAVE DIRECTED OR ORDERED THAT THE PROJECT BE CONSTRUCTED.

SIGNATURE 4/25/05 DATE

STATE OF MISSOURI
KIRSTEN MUNCK
4/25/05
NUMBER PE-2003001076
PROFESSIONAL ENGINEER

| STATE | PROJ. NO. | SHEET NO. |
|---|---|---|
| MO | J4I0712 | B61 |
| 021115-407 | I-435-1(277) | |

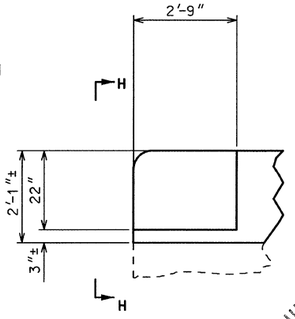


PART ELEVATION

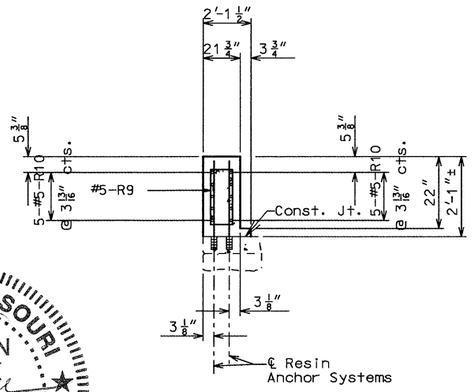


SECTION E-E

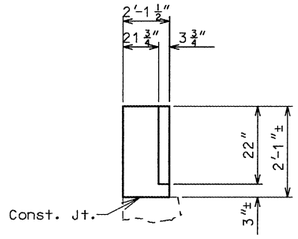


PART ELEVATION H-H

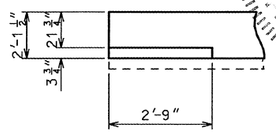


PART PLAN

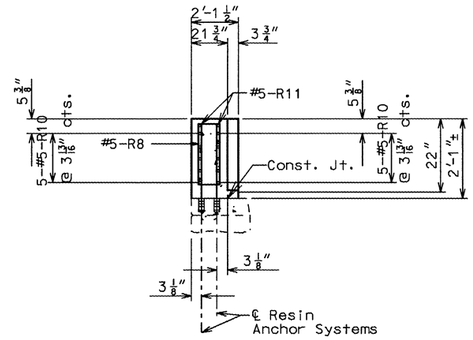


SECTION F-F

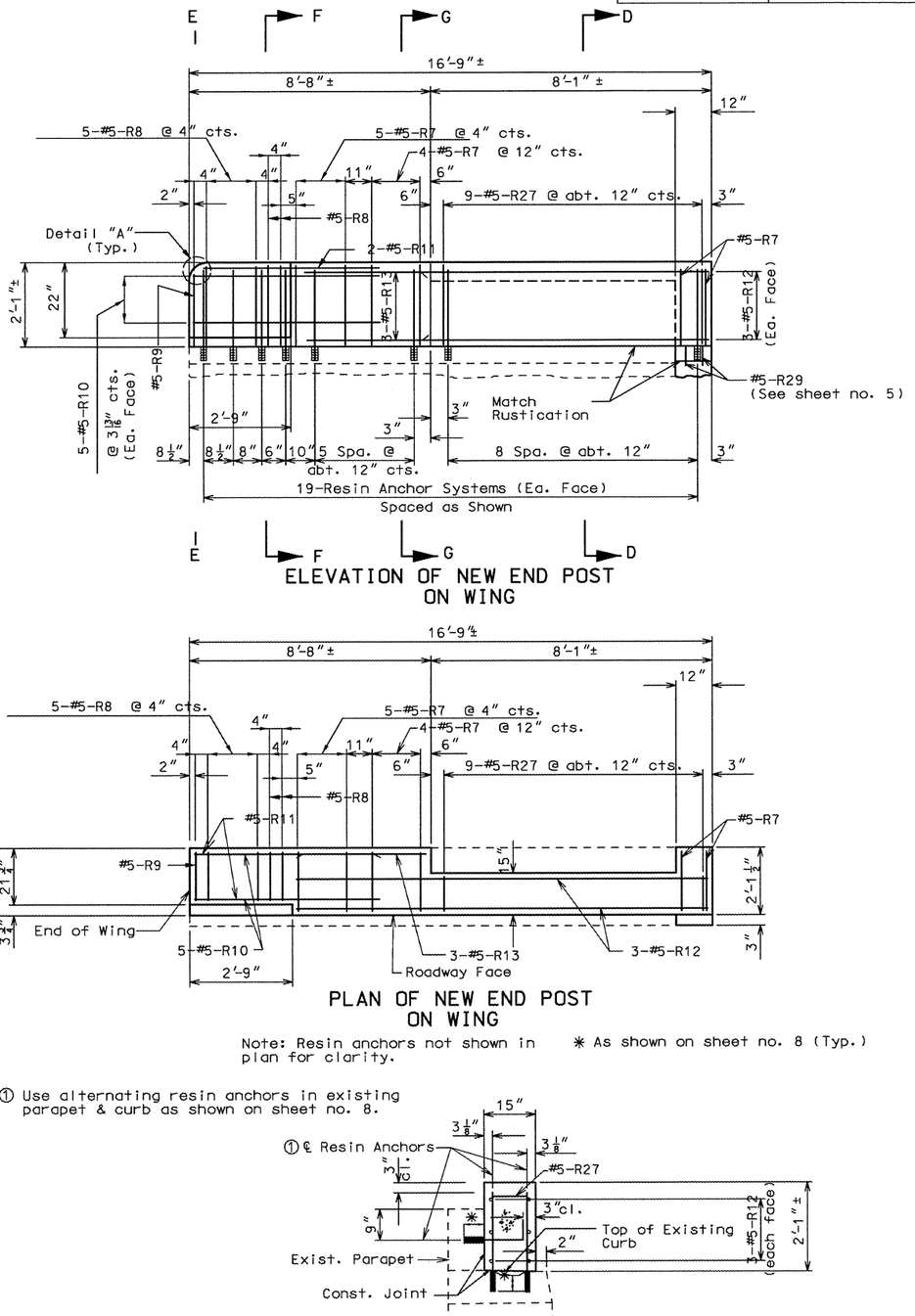


ELEVATION OF NEW END POST ON WING

## DETAILS OF GUARD RAIL ATTACHMENT

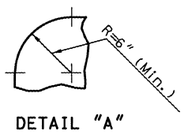


DETAIL "A"




PLAN OF NEW END POST ON WING

Note: Resin anchors not shown in plan for clarity.

✳ As shown on sheet no. 8 (Typ.)

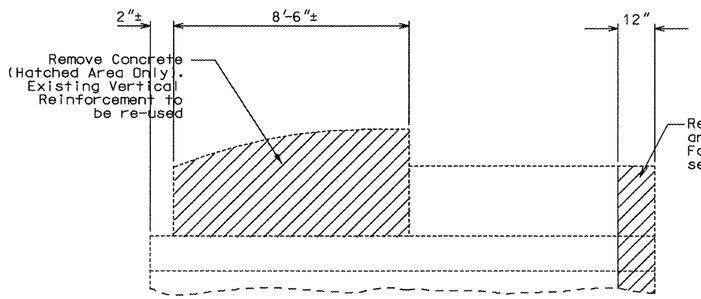


ELEVATION OF EXISTING END POST SHOWING CONCRETE REMOVAL

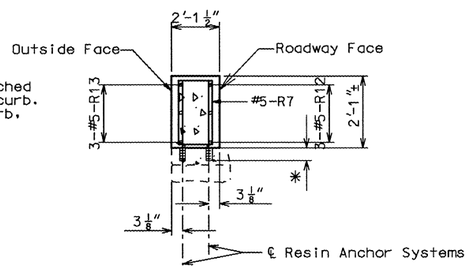


SECTION G-G

① Use alternating resin anchors in existing parapet & curb as shown on sheet no. 8.




SECTION D-D

Note: For correct orientation, see sheet no. 9.

## TYPICAL DETAILS OF END POST BLOCKOUT ON WING "A"

DETAILED MAR. 2002
CHECKED July 2002

NOTE: THIS DRAWING IS NOT TO SCALE. FOLLOW DIMENSIONS.

SHEET NO. 13 OF 17.

JACKSON COUNTY

A09933

| STATE | PROJ. NO. | SHEET NO. |
|---|---|---|
| MO | J4I0712 | B62 |
| 021115-407 | I-435-1(277) | |

FINAL PLANS

I CERTIFY THAT THIS PLAN SHEET ACCURATELY DEPICTS THE CONFIGURATION AND LOCATION OF THE ROADWAY AND ALL ITS APPURTENANT FEATURES, TO THE BEST OF MY KNOWLEDGE, AS I AND MY STAFF HAVE OBSERVED THE CONTRACTOR'S CONSTRUCTION OF THIS PROJECT. I SPECIFICALLY DISCLAIM ANY RESPONSIBILITY FOR THE DESIGN OF THIS PROJECT, EXCEPT AS I AND MY STAFF MAY HAVE MODIFIED OR AUTHORIZED THE MODIFICATION OF THE PROJECT DESIGN DURING ITS CONSTRUCTION; AND I DISCLAIM RESPONSIBILITY FOR THE CONTRACTOR'S ACTUAL CONSTRUCTION OF THE PROJECT, EXCEPT AS I AND MY STAFF MAY HAVE DIRECTED OR ORDERED THAT THE PROJECT BE CONSTRUCTED.

SIGNATURE _____ DATE 4/25/05

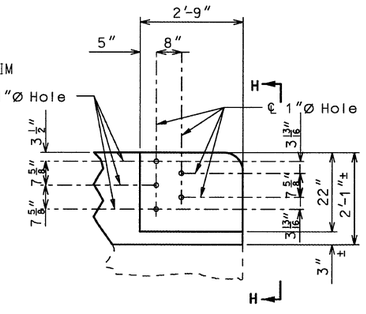


PART ELEVATION

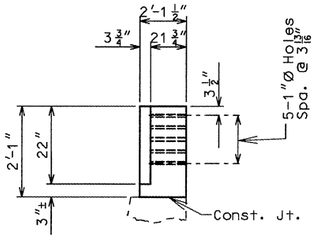


PART ELEVATION H-H

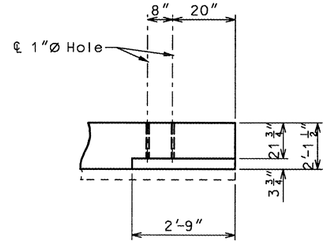


PART PLAN

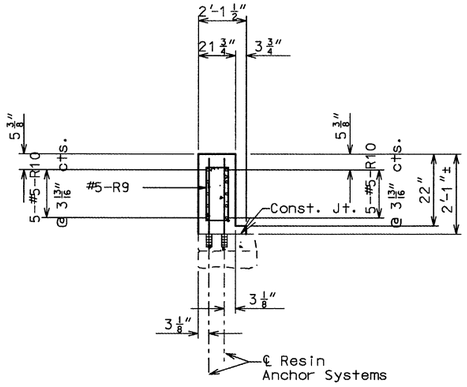


SECTION E-E

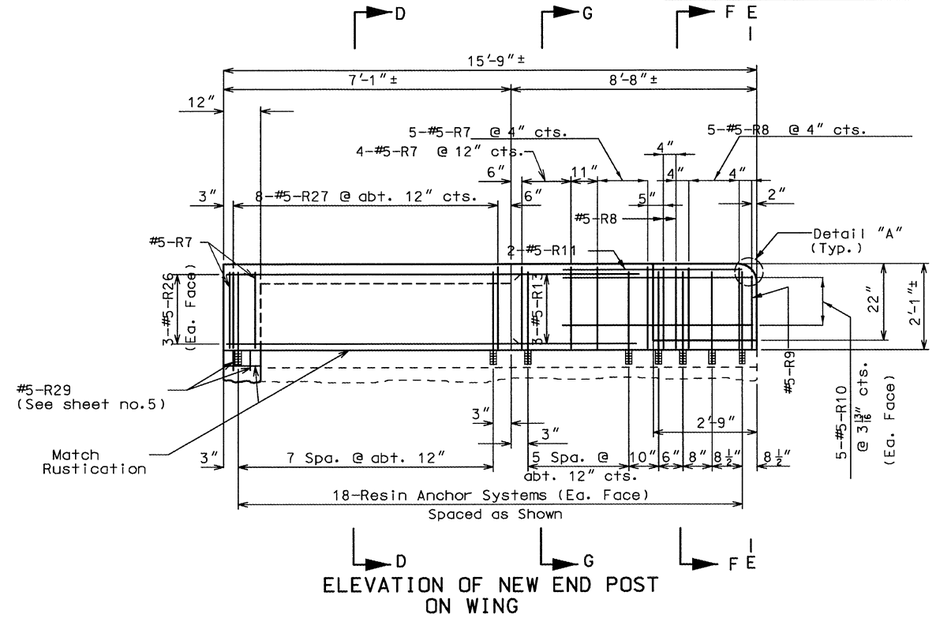


ELEVATION OF NEW END POST ON WING

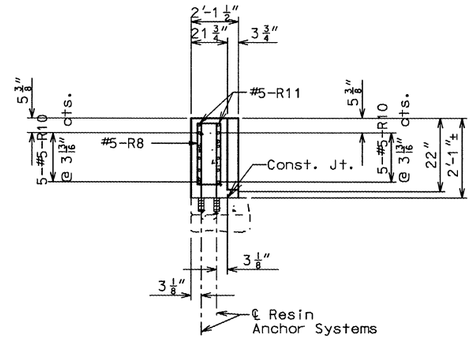


SECTION F-F

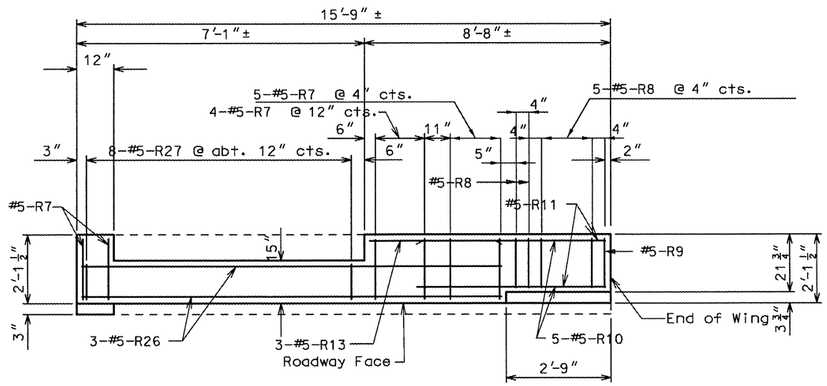


PLAN OF NEW END POST ON WING

Note: Resin anchors not shown in plan for clarity.

✱ As shown on sheet no. 8 (Typ.)

DETAILS OF GUARD RAIL ATTACHMENT

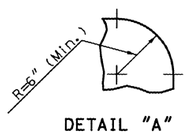


DETAIL "A"

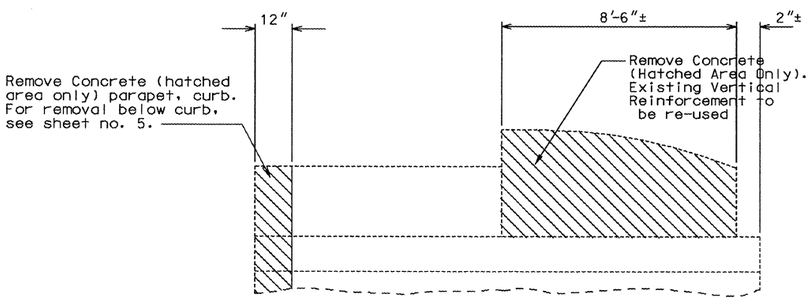


ELEVATION OF EXISTING END POST SHOWING CONCRETE REMOVAL

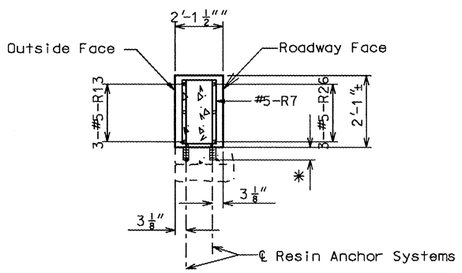


SECTION G-G

① Use alternating resin anchors in existing parapet & curb as shown on sheet no. 8.

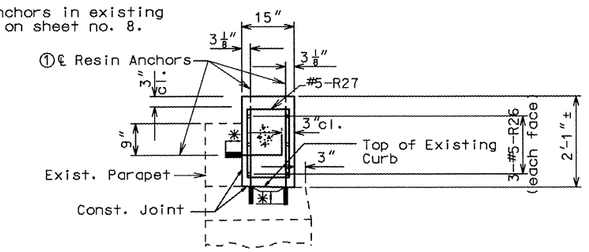


SECTION D-D

Note: For correct orientation, see sheet nos. 9 & 10.

TYPICAL DETAILS OF END POST BLOCKOUT ON WING "B" & "D"

DETAILED MAR. 2002
CHECKED July 2002

NOTE: THIS DRAWING IS NOT TO SCALE. FOLLOW DIMENSIONS.

SHEET NO. 14 OF 17

JACKSON COUNTY

A09933

| STATE | PROJ. NO. | SHEET NO. |
|---|---|---|
| MO | J4I0712 | B63 |
| 021115-407 | I-435-1(277) | |

FINAL PLANS

I CERTIFY THAT THIS PLAN SHEET ACCURATELY DEPICTS THE CONFIGURATION AND LOCATION OF THE ROADWAY AND ALL ITS APPURTENANT FEATURES, TO THE BEST OF MY KNOWLEDGE, AS I AND MY STAFF HAVE OBSERVED THE CONTRACTOR'S CONSTRUCTION OF THIS PROJECT. I SPECIFICALLY DISCLAIM ANY RESPONSIBILITY FOR THE DESIGN OF THIS PROJECT, EXCEPT AS I AND MY STAFF MAY HAVE MODIFIED OR AUTHORIZED THE MODIFICATION OF THE PROJECT DESIGN DURING ITS CONSTRUCTION, AND I DISCLAIM RESPONSIBILITY FOR THE CONTRACTOR'S ACTUAL CONSTRUCTION OF THE PROJECT, EXCEPT AS I AND MY STAFF MAY HAVE DIRECTED OR ORDERED THAT THE PROJECT BE CONSTRUCTED.

SIGNATURE 4/25/05 DATE

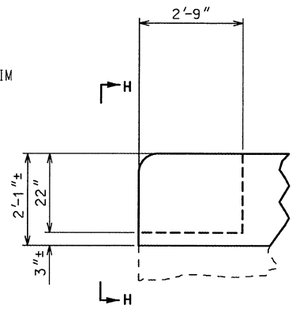


PART ELEVATION

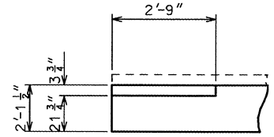


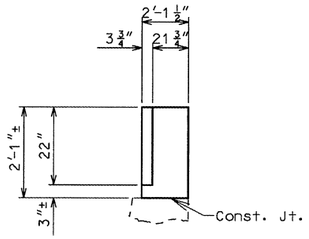


PART ELEVATION H-H

PART PLAN

DETAILS OF GUARD RAIL ATTACHMENT

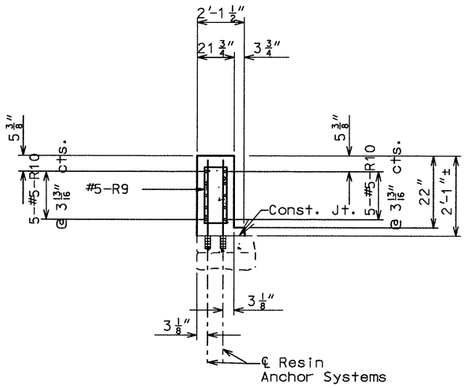


SECTION E-E

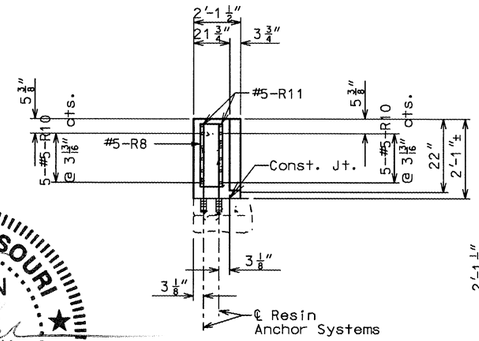


SECTION F-F

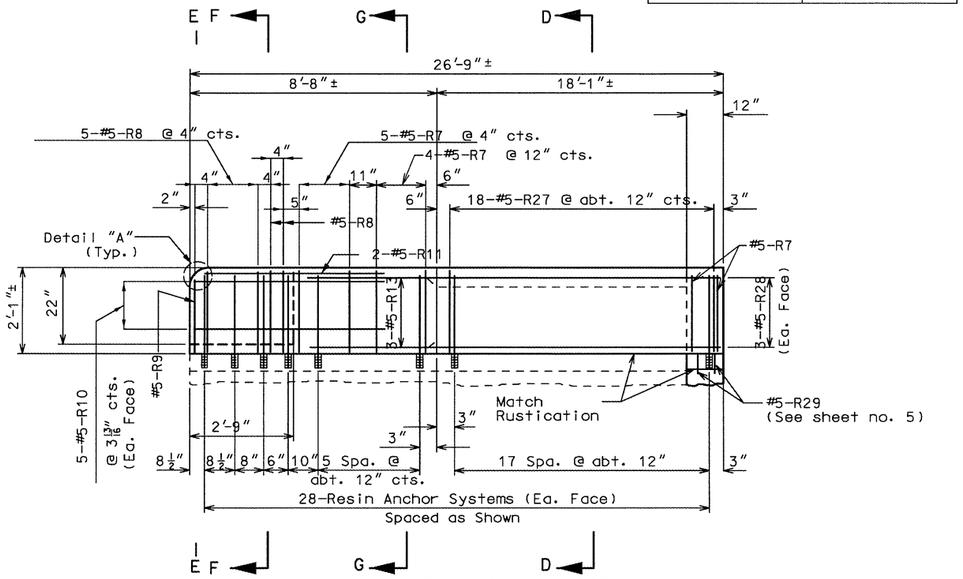


ELEVATION OF NEW END POST ON WING

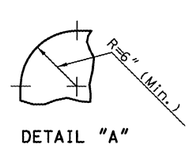


DETAIL "A"

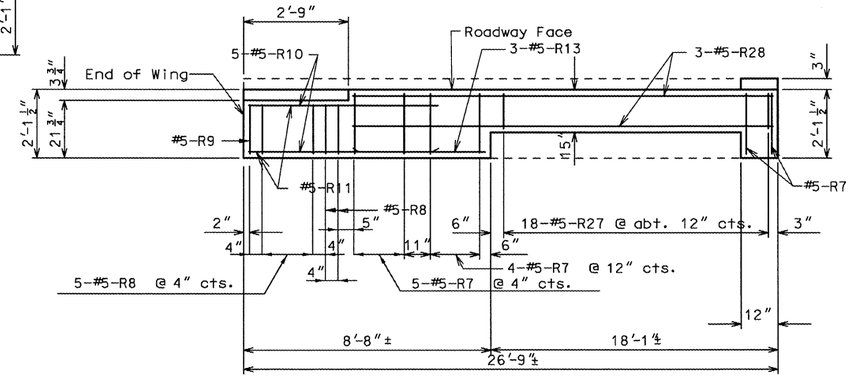


PLAN OF NEW END POST ON WING

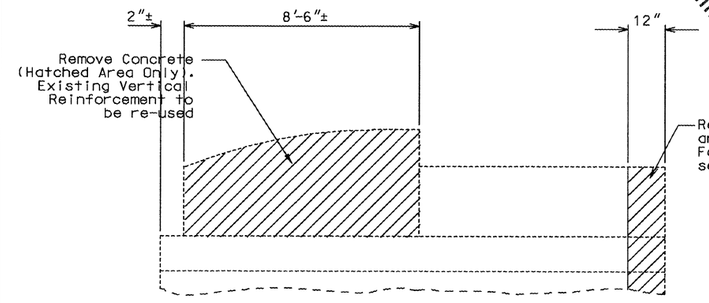


ELEVATION OF EXISTING END POST SHOWING CONCRETE REMOVAL

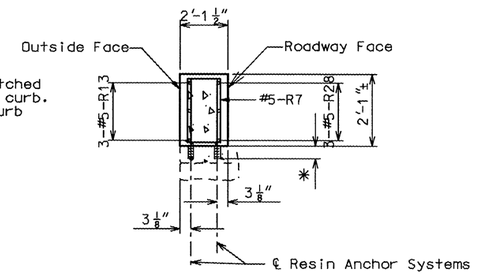


SECTION G-G

Note: Resin anchors not shown in plan for clarity.

* As shown on sheet no. 8 (Typ.)

① Use alternating resin anchors in existing parapet & curb as shown on sheet no. 8.

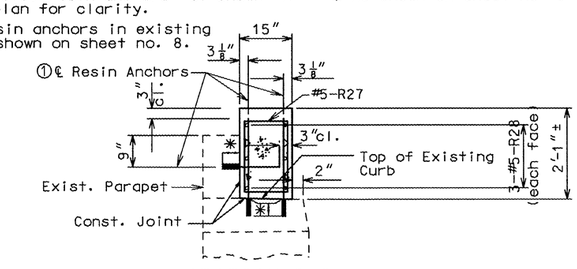


SECTION D-D

Note: For correct orientation, see sheet no. 10.

TYPICAL DETAILS OF END POST BLOCKOUT ON WING "C"

DETAILED MAR. 2002
CHECKED July 2002

NOTE: THIS DRAWING IS NOT TO SCALE. FOLLOW DIMENSIONS.

SHEET NO. 15 OF 17

JACKSON COUNTY

A09933

153

| State | Proj. No. | Sheet No. |
|---|---|---|
| MO | J4I0712 | B64 |
| 021115-407 | I-435-1(277) | |

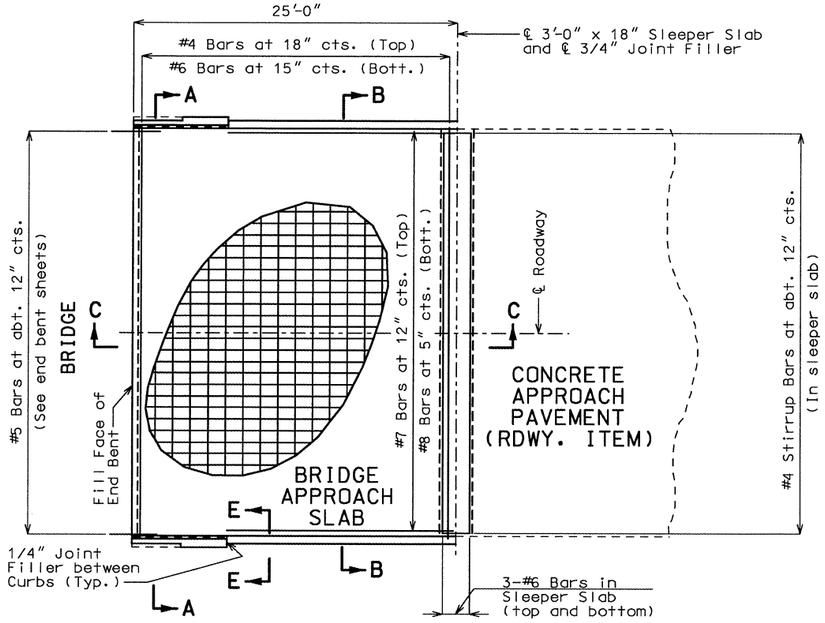


PART PLAN SHOWING REINFORCEMENT

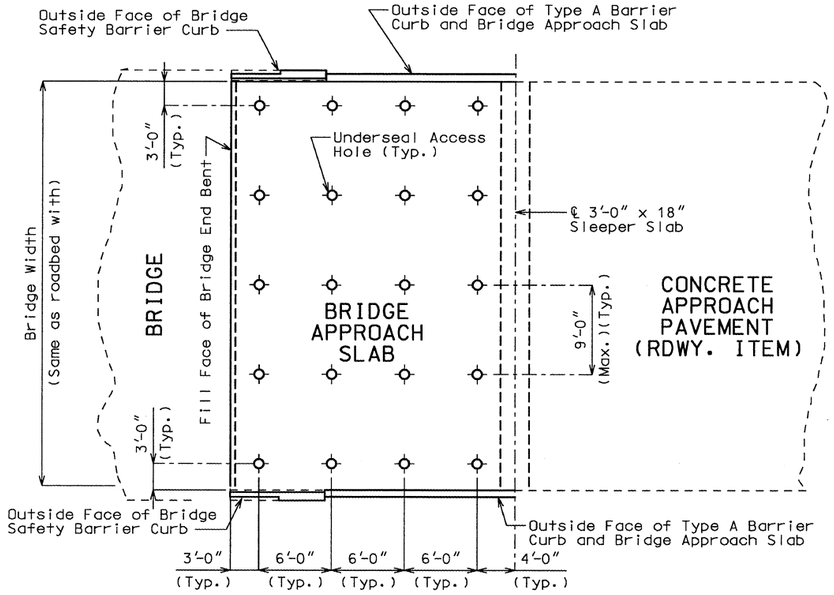


PART PLAN
(SHOWING TYPICAL UNDERSEAL ACCESS HOLE LOCATIONS)

## GENERAL NOTES:

All concrete for the bridge approach slab and sleeper slab shall be in accordance with Section 503 (f'c = 4,000 psi) of the Missouri Standard Specifications.

All joint filler shall meet the requirements of Section 1057.2.5 of the Missouri Standard Specifications, except as noted.

The reinforcing steel in the bridge approach slab and the sleeper slab shall be epoxy coated Grade 60 with Fy = 60,000 psi.

Minimum clearance to reinforcing steel shall be 1-1/2", unless otherwise shown.

The reinforcing steel in the bridge approach slab and the sleeper slab shall be continuous. The transverse reinforcing steel may be made continuous by lap splicing the #4 & #6 bars 18" and 26" respectively.

Mechanical bar splices will be permitted and shall develop at least 125 percent of the specified yield strength of the reinforcing bars being spliced. The contractor shall furnish the Engineer the manufacturer's certification that this requirement is met and is required to follow the manufacturer's recommendation for installation.

Mechanical bar splices shall be epoxy coated in accordance with Section 710 of the Missouri Standard Specifications.

Hooks and bends shall be in accordance with the CRSI Manual of Standard Practice for Detailing Reinforced Concrete Structures, Stirrup and Tie Dimensions.

The contractor shall pour and satisfactorily finish the bridge slab before pouring the bridge approach slabs.

Longitudinal construction joints in approach slab and sleeper slab shall be aligned with longitudinal construction joints in bridge slab.

Payment for furnishing all materials, labor and excavation necessary to construct the approach slab, including the timber header, sleeper slab, underdrain, Type 5 aggregate base and all other appurtenances and incidental work as shown on this sheet, complete in place, shall be considered as completely covered under the contract unit price for Bridge Approach Slab (Bridge), per sq. yd.

For Concrete Approach Pavement details, see roadway plans.

See Missouri Standard Plans Drawing 609.00 for details of Type A Barrier Curb.

When a lap splice is required for the use of a mechanical bar splice, the minimum lap length shall be 40" for transverse approach slab bar splices.

At the contractor's option, Grade 40 reinforcement may be substituted for the Grade 60 #5 dowel bars connecting the bridge approach slab to the bridge abutment. No additional payment will be made for this substitution.

When Grade 40 reinforcement is substituted for the Grade 60 #5 dowel bars connecting the bridge approach slab to the bridge abutment, the reinforcement may be bent up to 90 degrees with a 2" minimum radius near the abutment to allow compaction of the backfill material near the abutment. Damage to epoxy coating shall be repaired according to Section 710.3.3 of the Missouri Standard Specifications.

Drain pipe may be either 6" diameter corrugated metallic-coated pipe underdrain, 4" diameter corrugated polyvinyl chloride (PVC) drain pipe, or 4" diameter corrugated polyethylene (PE) drain pipe.

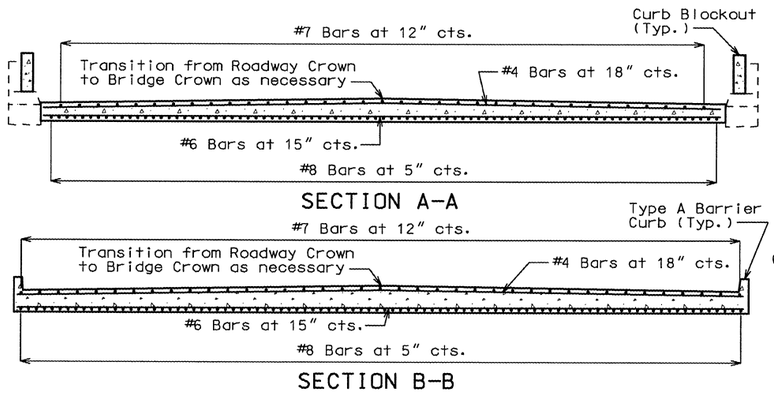


SECTION A-A




SECTION B-B

Note: With the approval of the Engineer, the contractor may crown the bottom of the approach slab to match the crown of the roadway surface.

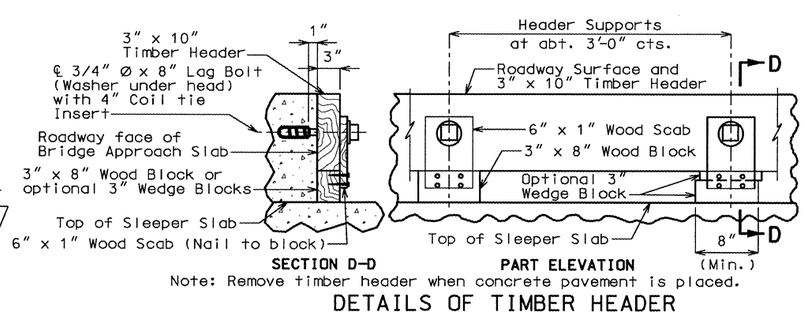


SECTION D-D PART ELEVATION

Note: Remove timber header when concrete pavement is placed.

DETAILS OF TIMBER HEADER

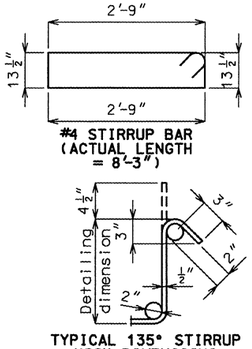


TYPICAL 135° STIRRUP HOOK DIMENSIONS BENDING DIAGRAM

Note: Nominal lengths are based on out to out dimensions shown in bending diagram and are listed for fabricators use (nearest inch).

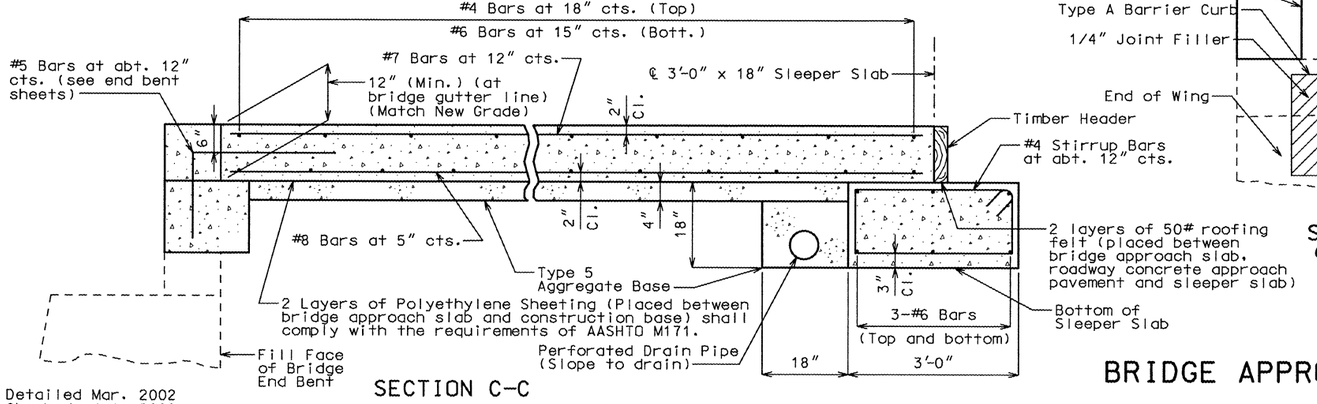


SECTION C-C

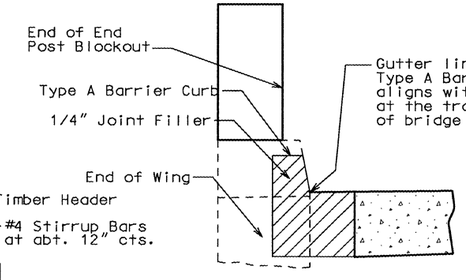


SECTION E-E
(BETWEEN CURBS)

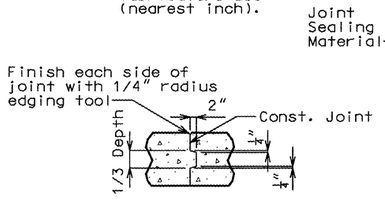


CONST. JOINT DETAIL
(IF REQUIRED)

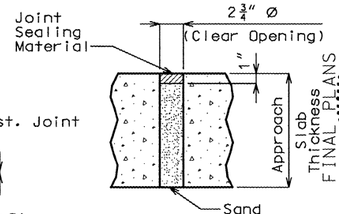


TYPICAL UNDERSEAL ACCESS HOLE DETAIL

BRIDGE APPROACH SLAB

Detailed Mar. 2002
Checked July 2002

Note: This drawing is not to scale. Follow dimensions.

Sheet No. 16 of 17

I CERTIFY THAT THIS PLAN SHEET ACCURATELY DEPICTS THE BRIDGE APPROACH SLAB AND ALL ASSOCIATED WORK TO THE BEST OF MY KNOWLEDGE AND ABILITY. ANY RESPONSIBILITY FOR ERRORS OR OMISSIONS ON THIS PLAN SHEET IS NOT ASSUMED BY, OR IMPLIED FOR, THE CONTRACTOR'S DESIGN ENGINEER OF RECORD OR ANY OF THEIR STAFF MEMBERS. I DO NOT ASSUME RESPONSIBILITY FOR CONSTRUCTION SAFETY, CONSTRUCTION MEANS AND METHODS, OR ANY OTHER ACTIVITIES ASSOCIATED WITH THIS PROJECT. I ALSO CERTIFY THAT THE DESIGN SHOWN ON THIS PLAN SHEET IS IN CONFORMANCE WITH THE DESIGN CONCEPT AS SHOWN ON THE APPROVED PLANS AND SPECIFICATIONS FOR THIS PROJECT, EXCEPT AS NOTED OTHERWISE. I AM AUTHORIZED TO AND DO HEREBY GRANT PERMISSION TO THE CONTRACTOR TO MAKE MINOR CHANGES IN THE CONFIGURATION OF THE BRIDGE APPROACH SLAB AND ITS APPURTENANCES DURING CONSTRUCTION AS I AND MY REPRESENTATIVES MAY DEEM NECESSARY OR DESIRABLE, EXCEPT THAT THE PROJECT SHALL BE CONSTRUCTED FOR THE CONTRACT UNIT PRICE BID FOR THE WORK.

STATE OF MISSOURI
KIRSTEN MUNCK
NUMBER PE-2003018076
PROFESSIONAL ENGINEER
SIGNATURE

JACKSON COUNTY A09933

# BILL OF REINFORCING STEEL

| NO. REQ'D. | MARK NO. SIZE | MARK | LOCATION | (E) EPOXY | SHAPE NO. | STIRRUP (S) | SUBSTR. (X) | VARIES (V) | NO. EACH | DIMENSIONS B FT. | B IN. | C FT. | C IN. | D FT. | D IN. | E FT. | E IN. | F FT. | F IN. | H FT. | H IN. | K FT. | K IN. | NOMINAL LENGTH FT. | NOMINAL LENGTH IN. | ACTUAL LENGTH FT. | ACTUAL LENGTH IN. | WEIGHT LBS. |
|---|---|---|---|---|---|---|---|---|---|---|---|---|---|---|---|---|---|---|---|---|---|---|---|---|---|---|---|---|
| | | | SUPERSTR. | | | | | | | | | | | | | | | | | | | | | | | | | |
| | | | END BT 1&7 | | | | | | | | | | | | | | | | | | | | | | | | | |
| * 6 | 6 | H1 | BACKWALL | E | 20 | | | | | 39 | 9.000 | | | | | | | | | | | | | 39 | 9 | 39 | 9 | 358 |
| 8 | 6 | H2 | BACKWALL | E | 20 | | | | | 39 | 9.000 | | | | | | | | | | | | | 39 | 9 | 39 | 9 | 478 |
| 80 | 5 | H3 | BACKWALL | E | 19 | | | | | | 18.000 | 21.000 | | | | | | | | | | | | 3 | 3 | 3 | 2 | 264 |
| 56 | 4 | U1 | BACKWALL | E | 10 | S | | | | | | 18.000 | | 9.000 | | | | | | | | | | 3 | 9 | 3 | 7 | 134 |
| 54 | 4 | U2 | BACKWALL | E | 10 | S | | | | | | 13.000 | | 15.000 | | | | | | | | | | 3 | 5 | 3 | 3 | 117 |
| 940 | 5 | R3 | BARRIER CURB | E | 13 | S | | | | | 12.000 | 19.750 | | 12.000 | | 19.750 | | | | | | | | 6 | 3 | 5 | 11 | 5801 |
| 48 | 5 | R4 | BARRIER CURB | E | 20 | | | | | 8 | 3.000 | | | | | | | | | | | | | 8 | 3 | 8 | 3 | 413 |
| 24 | 5 | R5 | BARRIER CURB | E | 20 | | | | | 9 | 3.000 | | | | | | | | | | | | | 9 | 3 | 9 | 3 | 232 |
| 48 | 5 | R6 | BARRIER CURB | E | 20 | | | | | 9 | 9.000 | | | | | | | | | | | | | 9 | 9 | 9 | 9 | 488 |
| 44 | 5 | R7 | BARRIER CURB | E | 13 | S | | | | | 22.500 | 22.000 | | 22.500 | | 22.000 | | | | | | | | 8 | 4 | 8 | 0 | 367 |
| 28 | 5 | R8 | BARRIER CURB | E | 13 | S | | | | | 18.750 | 22.000 | | 18.750 | | 22.000 | | | | | | | | 7 | 9 | 7 | 5 | 217 |
| 4 | 5 | R9 | BARRIER CURB | E | 13 | S | | | | | 18.750 | 17.000 | | 18.750 | | 17.000 | | | | | | | | 6 | 11 | 6 | 7 | 27 |
| 40 | 5 | R10 | BARRIER CURB | E | 20 | | | | | 6 | 0.000 | | | | | | | | | | | | | 6 | 0 | 6 | 0 | 250 |
| 8 | 5 | R11 | BARRIER CURB | E | 20 | | | | | 5 | 9.000 | | | | | | | | | | | | | 5 | 9 | 5 | 9 | 48 |
| 6 | 5 | R12 | BARRIER CURB | E | 20 | | | | | 13 | 9.000 | | | | | | | | | | | | | 13 | 9 | 13 | 9 | 86 |
| 12 | 5 | R13 | BARRIER CURB | E | 20 | | | | | 8 | 5.000 | | | | | | | | | | | | | 8 | 5 | 8 | 5 | 105 |
| 12 | 5 | R14 | BARRIER CURB | E | 20 | | | | | 34 | 9.000 | | | | | | | | | | | | | 34 | 9 | 34 | 9 | 435 |
| 12 | 5 | R15 | BARRIER CURB | E | 20 | | | | | 37 | 10.000 | | | | | | | | | | | | | 37 | 10 | 37 | 10 | 474 |
| 12 | 5 | R16 | BARRIER CURB | E | 20 | | | | | 24 | 0.000 | | | | | | | | | | | | | 24 | 0 | 24 | 0 | 300 |
| 12 | 5 | R17 | BARRIER CURB | E | 20 | | | | | 27 | 2.000 | | | | | | | | | | | | | 27 | 2 | 27 | 2 | 340 |
| 12 | 5 | R18 | BARRIER CURB | E | 20 | | | | | 36 | 11.000 | | | | | | | | | | | | | 36 | 11 | 36 | 11 | 462 |
| 12 | 5 | R19 | BARRIER CURB | E | 20 | | | | | 34 | 10.000 | | | | | | | | | | | | | 34 | 10 | 34 | 10 | 436 |
| 12 | 5 | R20 | BARRIER CURB | E | 20 | | | | | 35 | 7.000 | | | | | | | | | | | | | 35 | 7 | 35 | 7 | 445 |
| 12 | 5 | R21 | BARRIER CURB | E | 20 | | | | | 38 | 11.000 | | | | | | | | | | | | | 38 | 11 | 38 | 11 | 487 |
| 12 | 5 | R22 | BARRIER CURB | E | 20 | | | | | 26 | 9.000 | | | | | | | | | | | | | 26 | 9 | 26 | 9 | 335 |
| 12 | 5 | R23 | BARRIER CURB | E | 20 | | | | | 25 | 8.000 | | | | | | | | | | | | | 25 | 8 | 25 | 8 | 321 |
| 12 | 5 | R24 | BARRIER CURB | E | 20 | | | | | 39 | 10.000 | | | | | | | | | | | | | 39 | 10 | 39 | 10 | 499 |
| 12 | 5 | R25 | BARRIER CURB | E | 20 | | | | | 35 | 5.000 | | | | | | | | | | | | | 35 | 5 | 35 | 5 | 443 |
| * 14 | 5 | R26 | BARRIER CURB | E | 20 | | | | | 12 | 9.000 | | | | | | | | | | | | | 12 | 9 | 12 | 9 | 186 |
| 43 | 5 | R27 | BARRIER CURB | E | 13 | S | | | | | 12.000 | 20.500 | | 12.000 | | 20.500 | | | | | | | | 6 | 4 | 6 | 0 | 269 |
| 6 | 5 | R28 | BARRIER CURB | E | 20 | | | | | 23 | 9.000 | | | | | | | | | | | | | 23 | 9 | 23 | 9 | 149 |
| 8 | 5 | R29 | BARRIER CURB | E | 10 | | | | | | | 18.000 | | 2 1.500 | | | | | | | | | | 5 | 2 | 4 | 11 | 41 |
| | | | TOTALS | | | | | | | | | | | | | | | | | | | | | | | | | |
| | 4 | | | E | | | | | | | | | | | | | | | | | | | | | | | | 251 |
| | 5 | | | E | | | | | | | | | | | | | | | | | | | | | | | | 13920 |
| | 6 | | | E | | | | | | | | | | | | | | | | | | | | | | | | 836 |
| | | | TOTAL | | | | | | | | | | | | | | | | | | | | | | | | | 0 |
| | | | TOTAL | E | | | | | | | | | | | | | | | | | | | | | | | | 15007 |
| | | | Slab on | | | | | | | | | | | | | | | | | | | | | | | | | |
| | | | Girder | | | | | | | | | | | | | | | | | | | | | | | | | |
| | 4 | | | E | | | | | | | | | | | | | | | | | | | | | | | | 251 |
| | 5 | | | E | | | | | | | | | | | | | | | | | | | | | | | | 264 |

# BILL OF REINFORCING STEEL

| NO. REQ'D. | MARK NO. SIZE | MARK | LOCATION | (E) EPOXY | SHAPE NO. | STIRRUP (S) | SUBSTR. (X) | VARIES (V) | NO. EACH | DIMENSIONS B FT. | B IN. | C FT. | C IN. | D FT. | D IN. | E FT. | E IN. | F FT. | F IN. | H FT. | H IN. | K FT. | K IN. | NOMINAL LENGTH FT. | NOMINAL LENGTH IN. | ACTUAL LENGTH FT. | ACTUAL LENGTH IN. | WEIGHT LBS. |
|---|---|---|---|---|---|---|---|---|---|---|---|---|---|---|---|---|---|---|---|---|---|---|---|---|---|---|---|---|
| | 6 | | | E | | | | | | | | | | | | | | | | | | | | | | | | 836 |
| | | | TOTAL | | | | | | | | | | | | | | | | | | | | | | | | | 1351 |
| | | | Safety | | | | | | | | | | | | | | | | | | | | | | | | | |
| | | | Barrier | | | | | | | | | | | | | | | | | | | | | | | | | |
| | | | Curb | | | | | | | | | | | | | | | | | | | | | | | | | |
| | 5 | | | E | | | | | | | | | | | | | | | | | | | | | | | | 13656 |
| | | | TOTAL | | | | | | | | | | | | | | | | | | | | | | | | | 13656 |

| State | Proj. No. | Sheet No. |
|---|---|---|
| MO | J410712 | B65 |
| 021115-407 | I-435-1(277) | |

SHAPE 6 · SHAPE 7 · SHAPE 8 · SHAPE 9 · SHAPE 10 · SHAPE 11 · SHAPE 12 · SHAPE 13 · SHAPE 14 · SHAPE 15 · SHAPE 16 · SHAPE 17 · SHAPE 18 · SHAPE 20 · SHAPE 19 · SHAPE 21 · SHAPE 23 · SHAPE 24 · SHAPE 22 · SHAPE 25 · SHAPE 26 · SHAPE 27 · SHAPE 28 · SHAPE 29 · SHAPE 31 · SHAPE 30 · SHAPE 32 · SHAPE 33 · SHAPE 34 · SHAPE 35 · SHAPE 36

SPOT WELD AASHTO M32 SIZE W5 WIRE (TYP.)

VERTICAL LEG

3" PITCH

1-1/2 TURNS

LAP

135° HOOK

C PITCH

STATE OF MISSOURI
KIRSTEN MUNCK
NUMBER PE-2003001076
PROFESSIONAL ENGINEER

## FINAL PLANS

I CERTIFY THAT THIS PLAN SHEET ACCURATELY DEPICTS THE CONFIGURATION AND LOCATION OF THE ROADWAY AND ALL STRUCTURAL FEATURES TO BE CONSTRUCTED ON THIS PROJECT AS PLANNED AND AS OBSERVED BY THE CONTRACTOR'S AUTHORIZED THE MODIFICATION OF THE PROJECT DESIGN DURING ITS CONSTRUCTION; AND I DISCLAIM RESPONSIBILITY FOR THE CONTRACTOR'S ACTUAL CONSTRUCTION OF THE PROJECT EXCEPT AS I AND MY STAFF MAY HAVE MODIFIED OR ANY RESPONSIBILITY FOR THE DESIGN OF THIS PROJECT. I SPECIFICALLY DISCLAIM CONSTRUCTION OF THIS PROJECT. I AND MY STAFF HAVE OBSERVED THE CONTRACTOR'S ACTUAL CONSTRUCTION OF THE PROJECT. I CERTIFY THAT THE PROJECT BE CONSTRUCTED.

SIGNATURE

4-25-05
DATE

## BENDING DIAGRAMS

6d FOR #4 AND #5, 12d FOR #6 · HOOK A OR G · DETAILING DIMENSION · 90° STIRRUP · 135° STIRRUP

DETAILED JULY 2002
CHECKED JULY 2002

| STIRRUP HOOK DIMENSIONS GRADES 40 - 50 - 60 KSI | | | | |
|---|---|---|---|---|
| BAR SIZE | D (IN.) | 90° HOOK A OR G | 135° HOOK A OR G | 135° HOOK APPROX. H |
| #4 | 2" | 4-1/2" | 4-1/2" | 3" |
| #5 | 2-1/2" | 6" | 5-1/2" | 3-3/4" |
| #6 | 4-1/2" | 12" | 8" | 4-1/2" |

NOTE: UNLESS OTHERWISE NOTED DIAMETER "D" IS THE SAME FOR ALL BENDS AND HOOKS ON A BAR.

DETAILING DIMENSION · 90° · A OR G · 12d · HOOK · 180° · 4d OR 2-1/2" MIN.

| END HOOK DIMENSIONS | | | | |
|---|---|---|---|---|
| BAR SIZE | D (IN.) | ALL GRADES 180° HOOKS A OR G | 180° HOOKS J | 90° HOOKS A OR G |
| #3 | 2-1/4" | 5" | 3" | 6" |
| #4 | 3" | 6" | 4" | 8" |
| #5 | 3-3/4" | 7" | 5" | 10" |
| #6 | 4-1/2" | 8" | 6" | 12" |
| #7 | 5-1/4" | 10" | 7" | 14" |
| #8 | 6" | 11" | 8" | 16" |
| #9 | 9-1/2" | 15" | 11-3/4" | 19" |
| #10 | 10-3/4" | 17" | 13-1/4" | 22" |
| #11 | 12" | 19" | 14-3/4" | 2'-0" |
| #14 | 18-1/4" | 2'-3" | 21-3/4" | 2'-7" |

* TWO ADDITIONAL #6H1 & #5R26 ARE INCLUDED IN THE BAR BILL FOR TESTING.

**NOTE:**
ALL STANDARD HOOKS AND BENDS OTHER THAN 180 DEG. TO BE BENT WITH THE SAME PROCEDURE AS FOR 90 DEG. STD. HOOKS.
HOOKS AND BENDS SHALL BE IN ACCORDANCE WITH THE PROCEDURES AS SHOWN ON THIS SHEET.
E = EPOXY COATED REINFORCEMENT.
S = STIRRUP.
X = BAR IS INCLUDED IN SUBSTRUCTURE QUANTITIES.
V = BAR DIMENSIONS VARY IN EQUAL INCREMENTS BETWEEN DIMENSIONS SHOWN ON THIS LINE AND THE FOLLOWING LINE.
NO. EA. = NUMBER OF BARS OF EACH LENGTH.
NOMINAL LENGTHS ARE BASED ON OUT TO OUT DIMENSIONS SHOWN IN BENDING DIAGRAMS AND ARE LISTED FOR FABRICATOR'S USE (NEAREST INCH).
ACTUAL LENGTHS ARE MEASURED ALONG CENTERLINE BAR TO THE NEAREST INCH.
PAYWEIGHTS ARE BASED ON ACTUAL LENGTHS.
FOUR ANGLE OR CHANNEL SPACERS ARE REQUIRED FOR EACH COLUMN SPIRAL. SPACERS ARE TO BE PLACED ON INSIDE OF SPIRALS. LENGTH AND WEIGHT OF COLUMN SPIRALS DO NOT INCLUDE SPLICES OR SPACERS.
REINFORCING STEEL (GRADE 60) = FY 60,000 PSI.

NOTE: THIS DRAWING IS NOT TO SCALE. FOLLOW DIMENSIONS.

SHEET NO. 17 OF 17

JACKSON COUNTY A09933