MISSOURI STATE HIGHWAY DEPARTMENT

FED. ROAD DIV. NO.	STATE	FEDERAL PROJECT NO. & SEC.	FISCAL YEAR	SHEET NO.	TOTAL SHEETS
5	MO			5	
DIST. NO.	COUNTY		ROUTE	SEC.	
4	JACKSON				

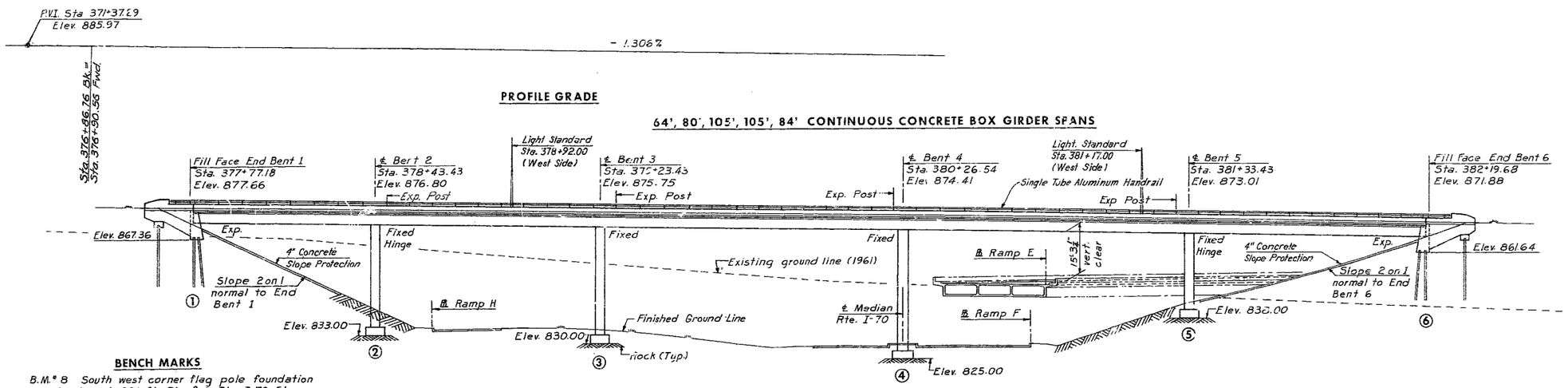

GENERAL ELEVATION

BENCH MARKS

B.M.# 8 South west corner flag pole foundation in school yard 221 ft. Rt. of ℄ Rte I-70 Sta. 313+49, Elev. 854.31.

B.M.#9 Nail in power pole 270 ft. Lt of Rte. I-70 Sta. 322+00, Elev. 870.89.

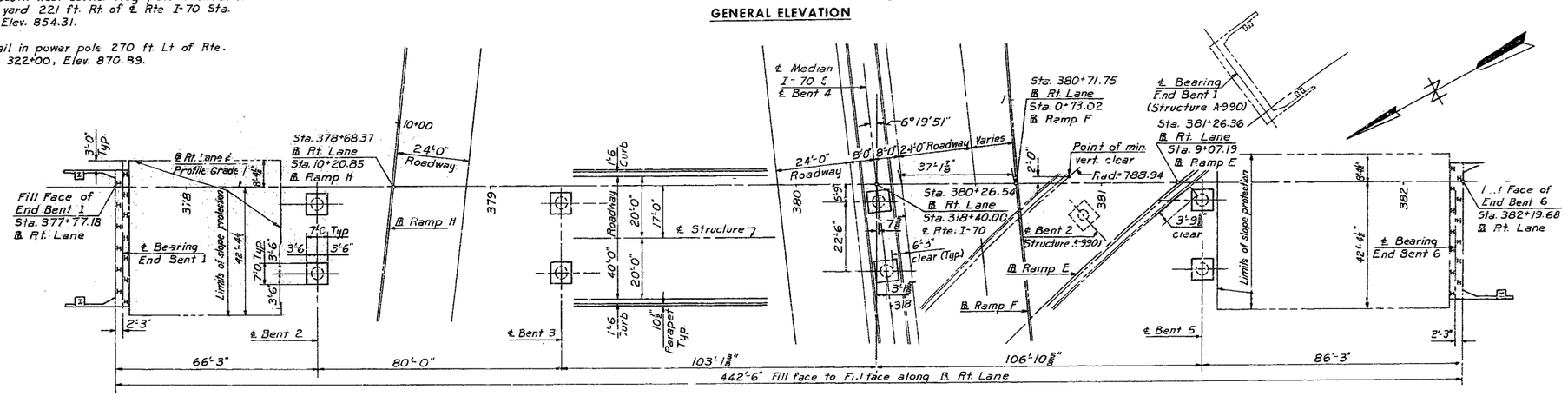

PLAN

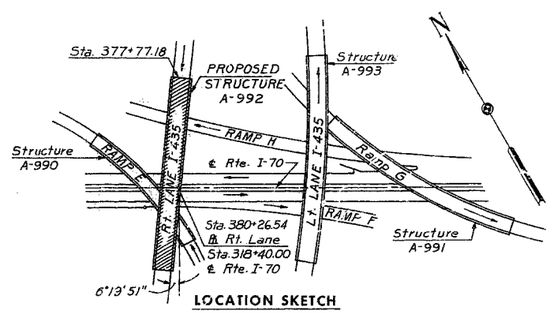

LOCATION SKETCH

Note
Roadway excavation shall be completed adjacent to this site before structure is started. See Special Provisions.
Concrete slope protection on front slopes at end bents to be included under road contract. Provide ½" filler between slope protection pavement and end bents. Concrete slope protection shall be extended a minimum of 6" into rock or soil. Joints shall consist of material conforming to section 157.1.7 of the Standard Specifications.
Compacted roadway fill (full roadway width) shall be placed up to elevation of bottom of concrete beam in front of and not less than 25'-0" in back of End Bent No. 6 before steel piles are driven for bent No. 6.
For location of piles in End Bents see Sheets 5 and 7.
All dimensions shown are horizontal.

SUBMITTED BY R. S. Bergendoff
REGISTERED PROFESSIONAL ENGINEER
MISSOURI NO. E-253

BRIDGE: RT. LANE RTE I-435 OVER RAMPS "H" "E" & "F" & RTE. I-70

STATE ROAD - ROUTES I-435 & I-70 INTERCHANGE
FROM ROUTE 40 TO LEEDS ROAD
PROJECT NO. I-435-1(24)(RTE. I-435) STA 380+26.54(RT. LANE)

JACKSON COUNTY

SUBMITTED BY C. A. Jenkins DATE 7/23/62
BRIDGE ENGINEER
APPROVED BY J. J. Corbett DATE 7/23/62
CHIEF ENGINEER

STD. 54.00
A-992

SHEET 1 OF 15

HOWARD, NEEDLES, TAMMEN, & BERGENDOFF
CONSULTING ENGINEERS
KANSAS CITY NEW YORK

MADE LWL	DATE 2-19-62	TRACED	DATE
CHECKED JLW	DATE 3-13-62	SCALE	

NOTE: This drawing is not to scale. Follow dimensions.

322

SEE FINAL PLANS BID PROPOSAL

MISSOURI STATE HIGHWAY DEPARTMENT

FED. ROAD DIV. NO.	STATE	FEDERAL PROJECT NO. & SEC.	FISCAL YEAR	SHEET NO.	TOTAL SHEETS
5	MO			57	
DIST. NO.	COUNTY		ROUTE	SEC.	
4	JACKSON				

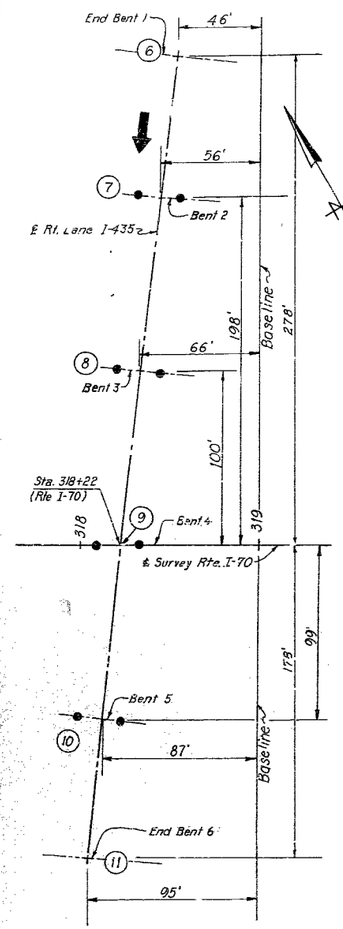

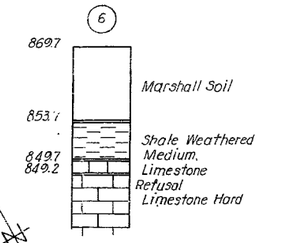

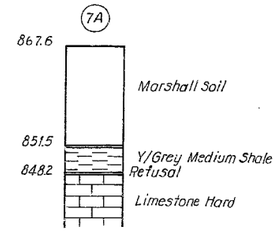

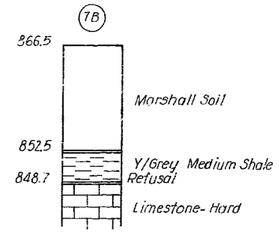

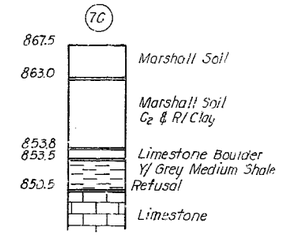

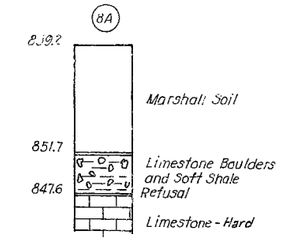

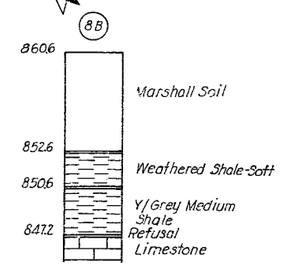

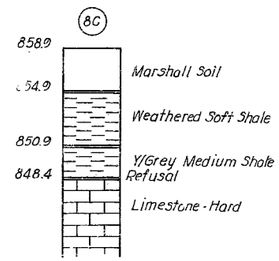

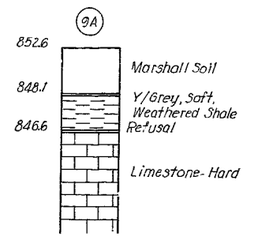

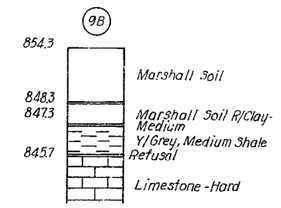

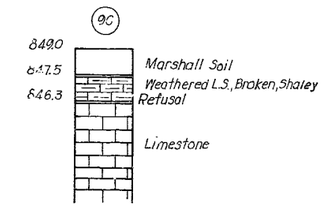

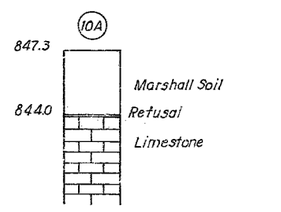

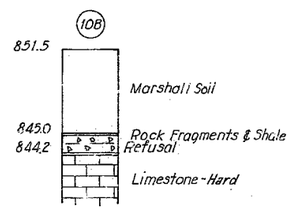

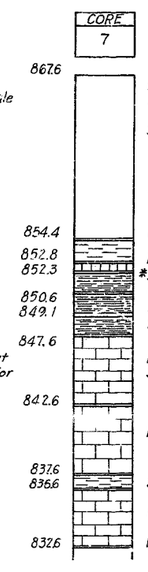

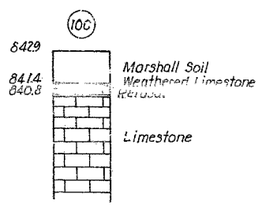

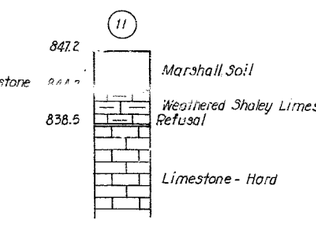

LOG OF SOUNDINGS

Note:
Soundings with Subscript "A" are on ℄ of Roadway.
Soundings with Subscript "B" are 35' Rt. of ℄.
Soundings with Subscript "C" are 35' Lt. of ℄.

* Std. Penetration Test at 16.2' Depth. 119 Blows for 1' Penetration.

Note:
All soundings are made with power auger except as noted for number 7.

ESTIMATED QUANTITIES

ITEM	UNIT	SUBSTR.	SUPERSTR.	TOTAL
Class 1 Excavation for Structures	Cu. Yd.	190		190
Steel Piles in Place (10BP42)	Lin. Ft.	675		675
Steel Pile Cut-offs (10BP42)	Lin. Ft.	90		90
Class B Concrete (Substructure)	Cu. Yd.	155.2		155.2
Class B1 Concrete	Cu. Yd.		1,434.5	1,434.5
Reinforcing Steel	Lbs.	15,730	510,930	526,660
Fabricated Structural Carbon Steel	Lbs.		8,130	8,130
Bridge Rail (Single Tube Type)	Lin. Ft.		917	917
Conduit System	L. S.			1

Quantity Notes

Class 1 Excavation for Structures will be measured from the existing ground line or from the lower limits of roadway excavation, whichever is lower, regardless of the sequence of operations or method of removal.
All excavation for bridge will be paid for as Class 1 Excavation for Structures. No payment for excavation will be allowed at End Bent 6.

All concrete and reinforcement at intermediate bents above top of footing are included in superstructure quantities.
Estimated quantity of Class B concrete substructure includes all concrete in End Bents and intermediate bent footings. All other concrete is included in estimated quantity of Class B1 concrete.
Weight of bearings is included in weight of Fabricated Structural Carbon Steel.
Estimated quantities of steel piles in place shown on plans are based on the following lengths: 15 at 23' (End Bent 1) and 15 at 28' (End Bent 6). These indicated lengths are approximate only. Proper lengths to give required bearing and/or penetration will be authorized by the engineer.

GENERAL NOTES

Design Specifications

A.A.S.H.O. 1961.

Design Loading

H20-S16-44 with 15#/sq.ft. future wearing surface. (Modified 24,000# Tandem Axles.)

Concrete

Concrete Stress - Class B1 fc = 1,600 p.s.i.
Class B fc = 1,200 p.s.i.
Concrete for superstructure shall be Class B1 air-entrained. Concrete for substructure shall be Class B air-entrained.

Reinforcing Steel

Allowable stress 20,000 p.s.i. All splices in reinforcing steel shall be 32 bar diameters.
Bar sizes are designated on the plans by numbers.
The first digit after the letter in three digit marks and the first two digits after the letter in four digit marks indicate the size of bar.
Dimensions shown on the plans from the reinforcing steel to outside edge of concrete are all clear dimensions.
All bending dimensions are from "out to out" of bars.

Joint Filler

Where joint filler is specified on the plans it shall conform with the requirements for gray sponge rubber compound joints as given in Section 157.2.4 of the Standard Specifications.

Metal Conduits

Expansion fittings shall be required in steel conduit at all expansion joints. Expansion fittings shall be O. Z. Electrical Manufacturing Company Type AX-125 with AJ bonding jumper or equal.

Sealing of Decks

Superstructure deck to be surface sealed.
See Special Provisions.

Welding

Qualification of welding operators will be required.

Utilities

All utilities, unless shown otherwise, shall be removed or relocated by others. The Contractor will notify the owner of the utilities of his work schedule sufficiently in advance to allow time for the disposition of utilities.

Shipping

Permits must be obtained for all truck loads over legal length.

Piling

All piles shall be 10BP42 and shall conform with details and notes shown on Sheet No. 5 . All piles shall be driven to or into solid rock, boulders, shale or cemented gravel, or to not less than full length authorized, and to sustain a load of at least 37 tons per pile for 10BP42.
All piles shall be driven with a power hammer.
See Section 52.47 of Standard Specifications, for required painting of steel piles.

Excavation to Rock

All loose, shelly or disintegrated rock shall be removed and footings placed on hard, solid, undisturbed rock. If soft rock or shale is encountered, the footings shall be carried at least 18" into and cast against vertical faces of same. In no case shall the footings be placed higher than elevations shown. Bearing of 12 tons per sq.ft. was used in design of footings.

GENERAL NOTES (CONT'D)

Painting

Paint: Shop none, except as noted for bearings; Field, three coats of red lead for surfaces inaccessible after erection. All other exposed surfaces except as noted for bearings first coat red lead, second coat brown, third coat aluminum except that final coat on access doors and frames shall be gray. Payment for paint, cleaning and painting such surfaces shall be included in the unit price bid for Fabricated Structural Carbon Steel.

HOWARD, NEEDLES, TAMMEN & BERGENDOFF
CONSULTING ENGINEERS
KANSAS CITY NEW YORK

MADE JLW	DATE 2-14-62	TRACED	DATE
CHECK LJR	DATE 3-15-62	SCALE	

NOTE: This drawing is not to scale. Follow dimensions.

BRIDGE: RT. LANE RTE. I-435 OVER RAMPS "H," "E" & "F" & RTE. I-70

STATE-ROAD - ROUTES I-435 & I-70 INTERCHANGE
FROM ROUTE 40 TO LEEDS ROAD
PROJECT NO. I-435-1(24)(RTE. I-435) STA. 380+26.54 (RT. LANE)

JACKSON COUNTY

SHEET 2 OF 15

A-992

323

SEE FINAL PLANS BROWN-LINES

MISSOURI STATE HIGHWAY DEPARTMENT

FED. ROAD DIV. NO.	STATE	FEDERAL PROJECT NO. & SEC.	FISCAL YEAR	SHEET NO.	TOTAL SHEETS
5	MO			56	
DIST. NO.	COUNTY			ROUTE	SEC.
4	JACKSON				

BILL OF REINFORCEMENT

NO.	MARK	LENGTH	SHAPE	LOCATION
		SUBSTRUCTURE		
		END BENT 1		
4	H401	9'-0"	⊓	Maskwall
6	H402	7'-5"	⊓	Maskwall
8	H501	17'-3"	Str.	Wingwall
4	H502	8'-2"	Str.	End Post
4	H503	6'-6"	Str.	End Post
20	H601	44'-5"	Str.	Beam & Backwall
2	H602	11'-8"		Beam
4	H603	13'-0"		Beam
6	H604	17'-5"		Wingwall
6	H605	17'-9"		
4	H606	5'-9"		
2	H607	14'-7"		
2	H608	12'-9"		
2	H609	16'-0"		
2	H610	6'-6"		
2	H611	9'-6"		
2	H612	6'-9"		
2	H613	4'-0"		Wingwall
12	H614	8'-0"		Fillet
4	H615	15'-6"	Str.	Wingwall
16	H801	2'-8"	Str.	Footing
10	V401	6'-8"	Str.	Maskwall
18	V402	5'-11"	⊓	Wingwall
54	V501	8'-0"	Str.	Backwall
34	V502	15'-6"	⊓	Beam
6	V503	13'-10"	⊓	Beam
18	V504	9'-7"	⊓	End Post
2	V505	9'-10"	Str.	Wingwall
4	V506	9'-1"		Wingwall & Fillet
4	V507	8'-4"		Wingwall & Fillet
4	V508	7'-7"		Wingwall
4	V509	6'-10"		
4	V510	6'-2"		
4	V511	5'-5"		
4	V512	4'-9"		
4	V513	4'-6"		
4	V514	4'-3"		
4	V515	3'-9"		
4	V516	3'-3"	Str.	
26	V517	7'-3"	⊓	Wingwall
4	V601	6'-11"	(	Counterfort
		END BENT 6		
4	H401	9'-0"	⊓	Maskwall
6	H402	7'-5"	⊓	Maskwall
8	H501	17'-3"	Str.	Wingwall
4	H502	8'-2"	Str.	End Post
4	H503	6'-6"	Str.	End Post
20	H601	44'-5"	Str.	Beam & Backwall
2	H602	11'-8"		Beam
4	H603	13'-0"		Beam
6	H604	17'-5"		Wingwall
6	H605	17'-9"		
4	H606	5'-9"		
2	H607	14'-7"		
2	H608	12'-9"	Str.	Wingwall

BILL OF REINFORCEMENT

NO.	MARK	LENGTH	SHAPE	LOCATION
2	H609	16'-0"	Str.	Wingwall
2	H610	6'-6"		
2	H611	9'-6"		
2	H612	6'-9"		
2	H613	4'-0"		Wingwall
12	H614	8'-0"		Fillet
4	H615	15'-6"	Str.	Wingwall
16	H801	2'-8"	Str.	Footing
10	V401	6'-8"	Str.	Maskwall
18	V402	5'-11"	⊓	Wingwall
54	V501	8'-0"	Str.	Backwall
34	V502	15'-6"	⊓	Beam
6	V503	13'-10"	⊓	Beam
18	V504	9'-7"	⊓	End Post
2	V505	9'-10"	Str.	Wingwall
4	V506	9'-1"		Wingwall & Fillet
4	V507	8'-4"		Wingwall & Fillet
4	V508	7'-7"		Wingwall
4	V509	6'-10"		
4	V510	6'-2"		
4	V511	5'-5"		
4	V512	4'-9"		
4	V513	4'-6"		
4	V514	4'-3"		
4	V515	3'-9"		
4	V516	3'-3"	Str.	
26	V517	7'-3"	⊓	Wingwall
4	V601	6'-11"	(	Counterfort

BILL OF REINFORCEMENT

NO.	MARK	LENGTH	SHAPE	LOCATION
		SUBSTRUCTURE		
		INT. BENT 2		
76	F721	6'-8"	Str.	Footing
12	F821	9'-6"	⊓	Footing
12	F1121	8'-5"	L	Footing
		INT. BENT 3		
52	F731	6'-8"	Str.	Footing
24	F1031	7'-3"	L	Footing
		INT. BENT 4		
52	F741	6'-8"	Str.	Footing
24	F1041	7'-3"	L	Footing
		INT. BENT 5		
76	F751	6'-8"	Str.	Footing
12	F851	9'-6"	⊓	Footing
12	F1151	8'-5"	L	Footing

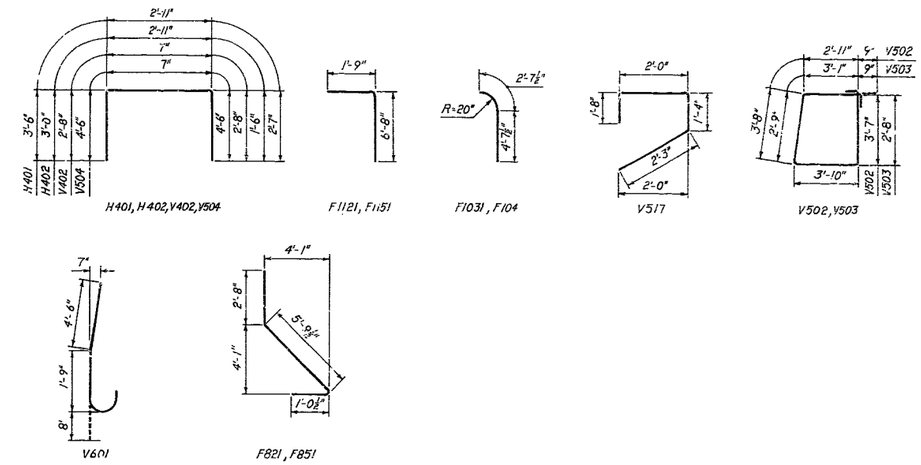

BENDING DIAGRAMS

Note
Hooks and bends shall be in accordance with ACI Manual of Standard Practice for Detailing Reinforced Concrete Structures. (ACI-315-57)

BRIDGE: RT. LANE RTE. I-435 OVER RAMPS "H," "E" & "F" & RTE. I-70

STATE ROAD - ROUTES I-435 & I-70 INTERCHANGE
FROM ROUTE 40 TO LEEDS ROAD
PROJECT NO. I-435-1(24)(RTE. I-435) STA. 380+26.54 (RT. LANE)

JACKSON COUNTY

HOWARD, NEEDLES, TAMMEN & BERGENDOFF
CONSULTING ENGINEERS
KANSAS CITY NEW YORK

MADE LJRE SAL DATE 3-12-62
CHECKED JLW & SAL DATE 3-12-62
TRACED DATE
SCALE

SHEET 3 OF 15

A-992

NO CONSTRUCTION CHANGES

324

MISSOURI STATE HIGHWAY DEPARTMENT

FED. ROAD DIV. NO.	STATE	FEDERAL PROJECT NO. & SEC.	FISCAL YEAR	SHEET NO.	TOTAL SHEETS
5	MO			9	
DIST. NO.	COUNTY		ROUTE	SEC.	
4	JACKSON				

BILL OF REINFORCEMENT

NO.	MARK	LENGTH	SHAPE	LOCATION
		SUPERSTRUCTURE		
220	D501	12'-6"		Int. Diaph.
8	D502	13'-8"		Spec. Diaph.
54	D601	37'-8"	Str.	End & Int. Diaph.
64	D602	14'-3"		End Diaph.
16	D603	17'-3"		End Diaph.
8	D604	9'-1"		Spec. Diaph.
4	D605	44'-4"	Str.	End Diaph.
469	G401	30'-0"	Str.	Girder Web
36	G402	16'-0"		
36	G403	15'-4"		
36	G404	20'-4"		
36	G405	19'-0"	Str.	Girder Web
870	G501	8'-7"		Girder Web
4356	G502	8'-7"		Girder Web
60	G801	60'-0"	Str.	Girder Web
12	G802	17'-0"		
12	G803	45'-4"		
12	G804	50'-4"		
12	G805	48'-0"	Str.	Girder Web
40	P501	30'-0"	Str.	Parapet
8	P502	28'-4"		
16	P503	30'-8"		
8	P504	25'-7"		
8	P505	30'-5"		
8	P506	7'-8"		
56	P507	9'-8"		
16	P508	38'-2"	Str.	Parapet
2	P509	6'-6"		Lt. Std. Support
2	P510	6'-3"		
2	P511	6'-0"		
6	P512	7'-8"		
4	P513	2'-4"	Str.	
2	P514	5'-9"		Lt. Std. Support
826	S401	6'-1"		Curb
992	S501	6'-0"	Str.	Top of Top Slab
990	S502	40'-0"		
2	S503	37'-9"		
10	S504	39'-9"		Top of Top Slab
610	S505	40'-0"		Bot. of Top Slab
61	S506	6'-4"		
61	S507	10'-4"		
61	S508	30'-0"		
61	S509	14'-8"		
967	S510	11'-10"		
987	S511	34'-3"		
10	S512	39'-11"		Bot. of Top Slab
496	S513	37'-8"		Bottom Slab
2	S514	32'-0"		
2	S515	24'-6"		
2	S516	16'-0"		
2	S517	8'-6"	Str.	Bottom Slab

BILL OF REINFORCEMENT

NO.	MARK	LENGTH	SHAPE	LOCATION
23	S601	51'-0"	Str.	Bottom Slab
22	S602	29'-0"	Str.	Bottom Slab
40	S603	[illegible]	Str.	Bottom Slab
46	S701	39'-9"	Str.	Bottom Slab
46	S812	46'-9"		
46	S813	56'-9"		
46	S814	51'-9"		
46	S705	8'-0"	Str.	Bottom Slab
54	S801	53'-6"	Str.	Top of Top Slab
54	S802	53'-4"		
162	S803	60'-0"		
54	S804	14'-0"		
54	S805	15'-0"		
54	S806	16'-3"		Top of Top Slab
22	S807	29'-0"		Bottom Slab
46	S808	42'-0"		Bottom Slab
23	S809	49'-0"	Str.	Bottom Slab
54	S810	13'-8"	Str.	Top of Top Slab
54	S811	10'-8"	Str.	Top of Top Slab
54	S1001	33'-0"	Str.	Top of Top Slab
27	S1002	16'-0"		Top of Top Slab
46	S1003	46'-6"		Bottom Slab
22	S1110	44'-0"		
46	S1005	60'-0"		
46	S1006	57'-0"		
23	S1113	17'-3"		
22	S1008	36'-0"		
46	S1009	55'-0"		
23	S1010	12'-3"		
23	S1011	11'-[illegible]		
22	S1012	39'-0"	Str.	Bottom Slab
27	S1101	40'-0"	Str.	Top of Top Slab
54	S1102	26'-0"		
26	S1103	15'-0"		
54	S1104	31'-0"		
27	S1105	44'-0"		
26	S1106	20'-0"		
27	S1107	43'-0"		
54	S1108	28'-0"		
26	S1109	18'-0"		Top of Top Slab
23	S1111	60'-0"		Bottom Slab
46	S1112	57'-0"		Bottom Slab
96	W401	30'-0"		Curb
8	W402	7'-4"		
8	W403	22'-4"		
8	W404	16'-3"		
8	W405	21'-[illegible]"		
8	W406	27'-4"	Str.	
826	W407	6'-5"		
40	W408	5'-9"		
40	W409	2'-0"	Str.	Curb

BILL OF REINFORCEMENT

NO.	MARK	LENGTH	SHAPE	LOCATION
		SUPERSTRUCTURE		
		INT. BENT 2		
52	B521	14'-0"		Beam
12	B522	3'-6"	Str.	
6	B621	37'-8"		
8	B1121	41'-1"		
4	B1122	17'-3"		
4	B1123	37'-8"	Str.	Beam
2	C421	1586'-4"		Column
24	C1021	40'-6"		Column
		INT. BENT 3		
52	B531	14'-1"		Beam
12	B532	3'-6"	Str.	
6	B631	37'-8"		
8	B1131	41'-1"		
10	B1132	17'-3"		
4	B1133	37'-8"		
1	B1134	16'-0"	Str.	Beam
2	C431	1672'-5"		Column
24	C1031	42'-6"		Column
		INT. BENT 4		
52	B541	14'-1"		Beam
12	B542	3'-6"	Str.	
6	B641	37'-10"		
8	B1141	41'-3"		
10	B1142	17'-4"		
4	B1143	37'-10"		
1	B1144	16'-0"	Str.	Beam
1	C441	1832'-10"		Column
1	C442	1831'-5"		Column
24	C1041	46'-1"		Column
		INT. BENT 5		
52	B551	14'-1"		Beam
12	B552	3'-6"	Str.	
6	B651	37'-8"		
8	B1151	41'-1"		
10	B1152	17'-3"		
4	B1153	37'-8"		
1	B1154	16'-0"	Str.	Beam
2	C451	1200'-2"		Column
24	C1051	31'-8"		Column

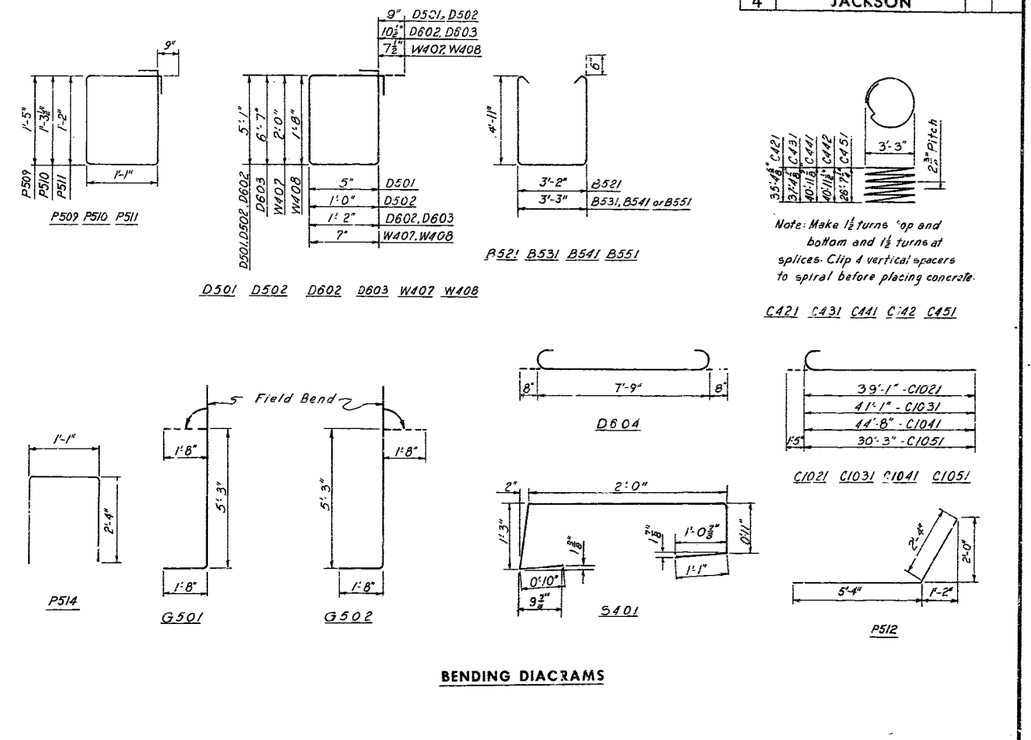

BENDING DIAGRAMS

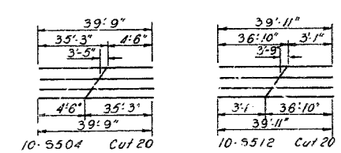

CUTTING DIAGRAM

Note
Hooks and bends shall be in accordance with ACI Manual of Standard Practice for Detailing Reinforced Concrete Structures. (ACI-315-57)

HOWARD, NEEDLES, TAMMEN & BERGENDOFF
CONSULTING ENGINEERS
KANSAS CITY NEW YORK

MADE G.L.C.	DATE 3-8-62	TRACED	DATE
CHECKED L.J.R.	DATE 4-17-62	SCALE	

BRIDGE: RT. LANE RTE. I-435 OVER RAMPS "H," "E" & "F" & RTE. I-70

STATE ROAD - ROUTES I-435 & I-70 INTERCHANGE
FROM ROUTE 40 TO LEEDS ROAD
PROJECT NO. I-435-1(24)(RTE. I-435) STA. 380+26.54 (RT. LANE)

JACKSON COUNTY

SHEET 4 OF 15

A-992

NO CONSTRUCTION CHANGES

325

MISSOURI STATE HIGHWAY DEPARTMENT

FED. ROAD DIV. NO.	STATE	FEDERAL PROJECT NO. & SEC.	FISCAL YEAR	SHEET NO.	TOTAL SHEETS
5	MO			60	
DIST. NO.	COUNTY		ROUTE		SEC.
4	JACKSON				

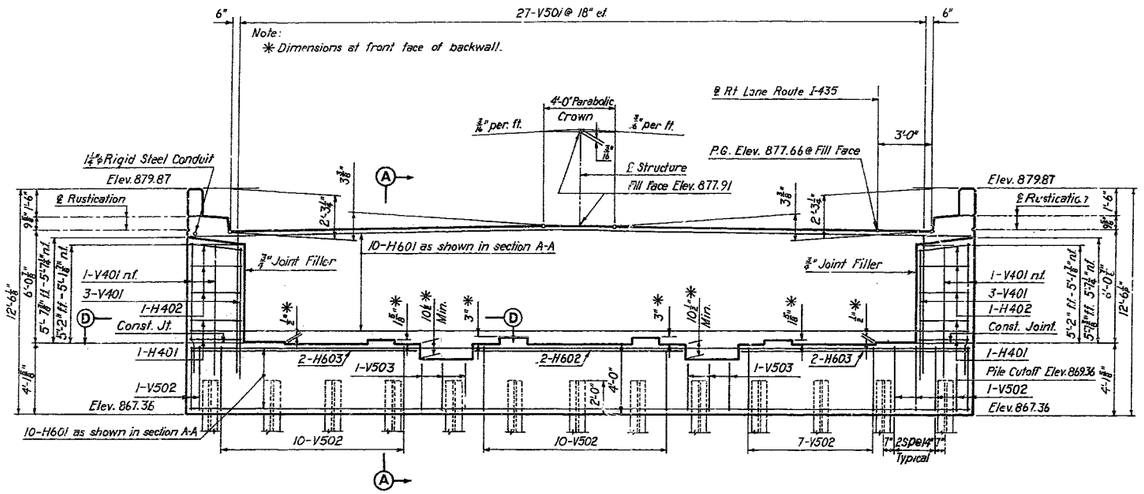

ELEVATION

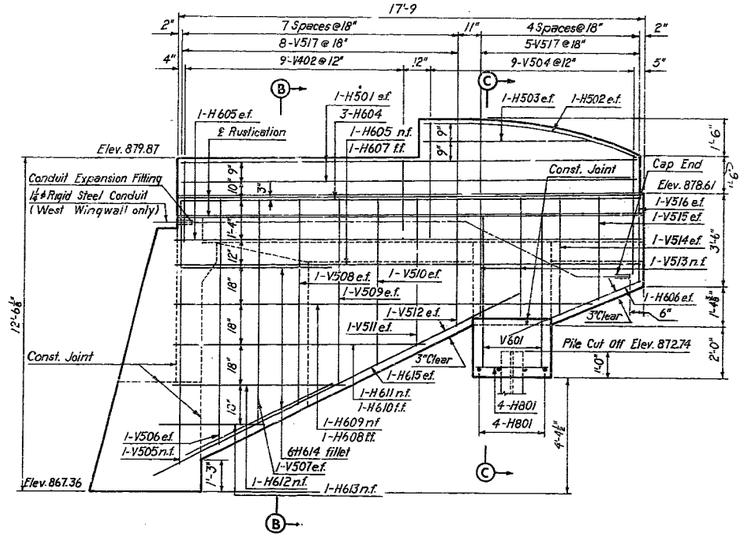

EAST WINGWALL ELEVATION
(West Wingwall Similar Except as Noted)

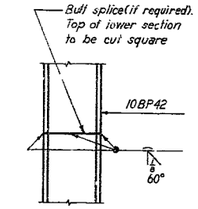

STEEL PILE SPLICE DETAIL

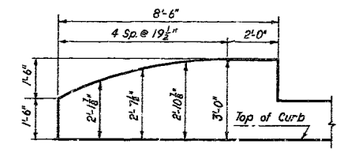

END POST ORDINATES

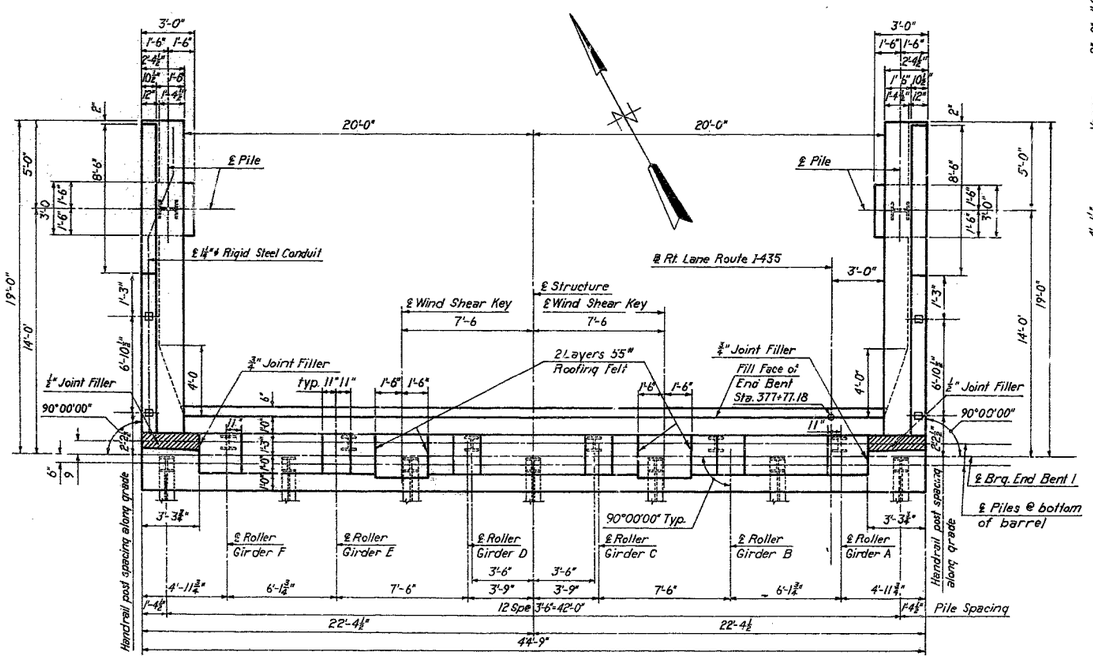

PLAN

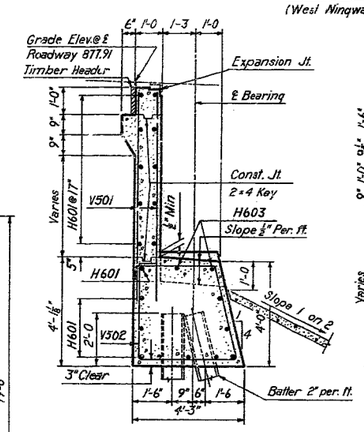

SECTION A-A

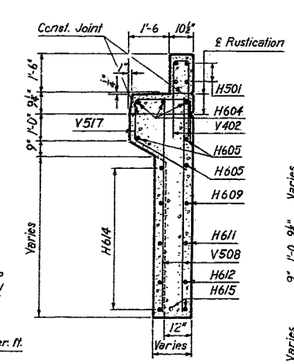

SECTION B-B

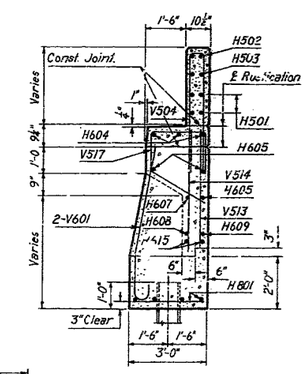

SECTION C-C

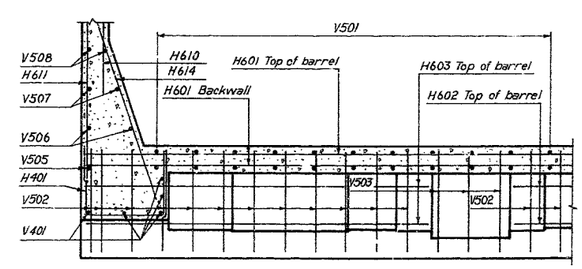

SECTION D-D

LEGEND
n.f. = Near face
f.f. = Far face
e.f. = Each face

Note:
All piles are 10BP42
Dimensions to surfaces receiving joint filler are to face of concrete.

BRIDGE: RT. LANE RTE. I-435 OVER RAMPS "H," "E" & "F" & RTE. I-70

STATE ROAD - ROUTES I-435 & I-70 INTERCHANGE
FROM ROUTE 40 TO LEEDS ROAD
PROJECT NO. I-435-1(24)(RTE. I-435) STA. 380+26.54 (RT. LANE)

JACKSON COUNTY

HOWARD, NEEDLES, TAMMEN & BERGENDOFF
CONSULTING ENGINEERS
KANSAS CITY — NEW YORK

MADE L.J.R.	DATE 1-23-62	TRACED	DATE
CHECKED S.H.L.	DATE 3-1-62	SCALE	

NOTE: This drawing is not to scale. Follow dimensions.

DETAILS OF END BENT 1

SHEET 5 OF 15

A-992

326

NO CONSTRUCTION STANDARD

MISSOURI STATE HIGHWAY DEPARTMENT

FED. ROAD DIV. NO.	STATE	FEDERAL PROJECT NO. & SEC.	FISCAL YEAR	SHEET NO.	TOTAL SHEETS
5	MO			61	
DIST. NO.	COUNTY		ROUTE	SEC.	
4	JACKSON				

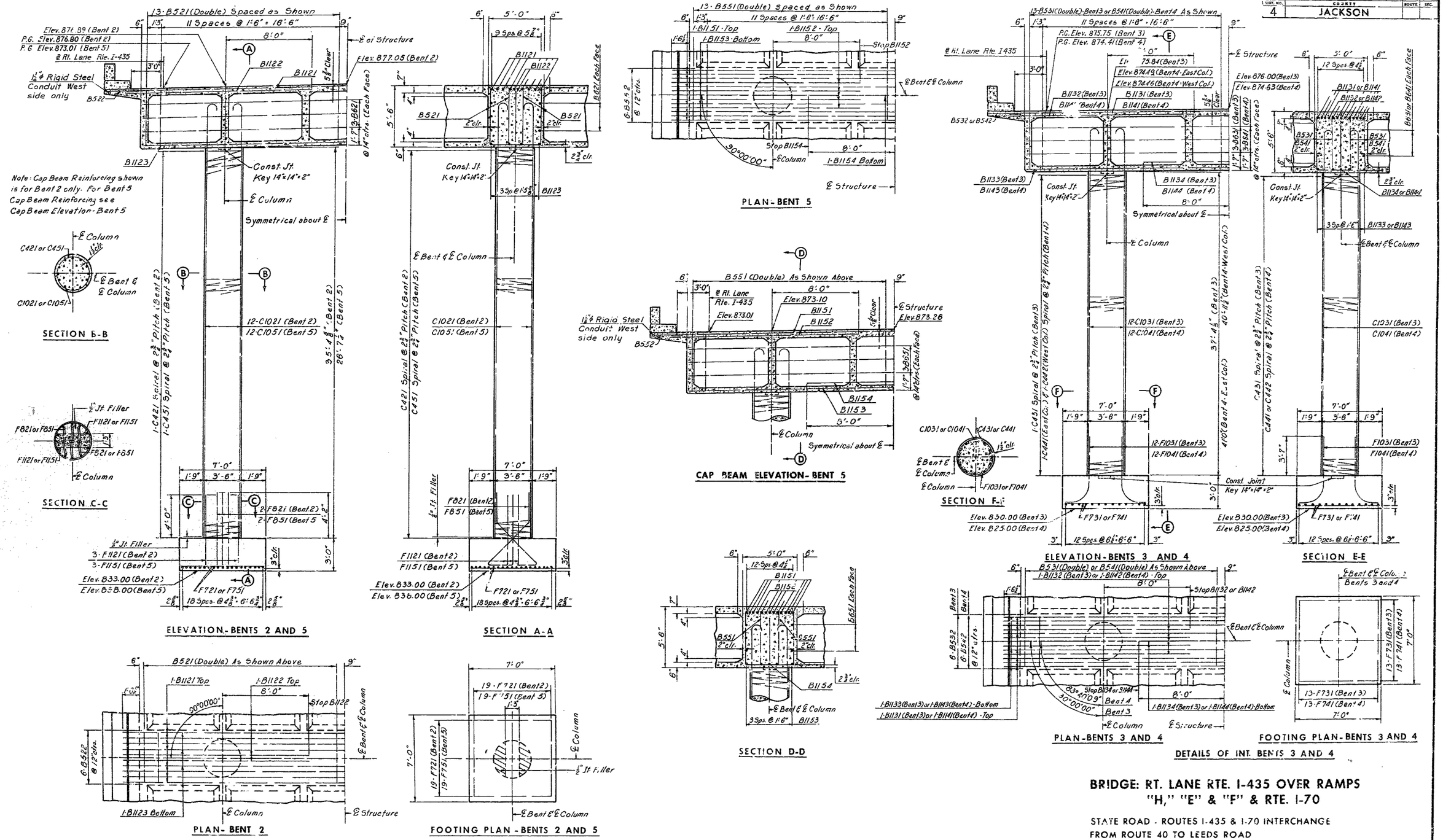

HOWARD, NEEDLES, TAMMEN & BERGENDOFF
CONSULTING ENGINEERS
KANSAS CITY NEW YORK

MADE S.R.L.	DATE 1-16-62	TRACED	DATE
CHECKED J.L.W.	DATE 2-28-62	SCALE	

NOTE This drawing is not to scale. Follow dimensions.

BRIDGE: RT. LANE RTE. I-435 OVER RAMPS "H," "E" & "F" & RTE. I-70

STATE ROAD - ROUTES I-435 & I-70 INTERCHANGE
FROM ROUTE 40 TO LEEDS ROAD
PROJECT NO. I-435-1(24)(RTE. I-435) STA. 380+26.54 (RT. LANE)

JACKSON COUNTY

SHEET 6 OF 15

A-992

327

MISSOURI STATE HIGHWAY DEPARTMENT

FED. ROAD DIV. NO.	STATE	FEDERAL PROJECT NO. & SEC.	FISCAL YEAR	SHEET NO.	TOTAL SHEETS
5	MO			62	
DIST. NO.	COUNTY			ROUTE	SEC.
4	JACKSON				

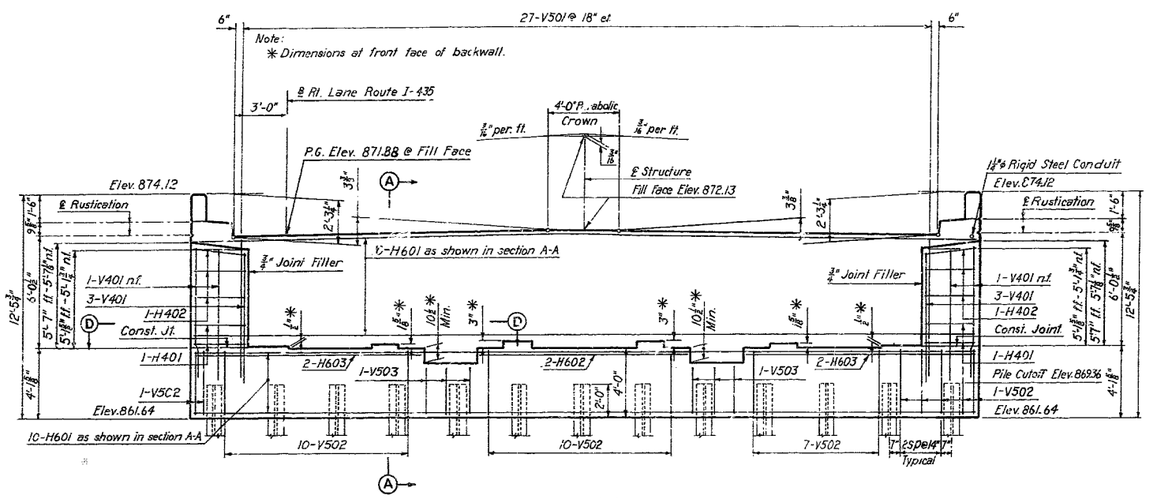

ELEVATION

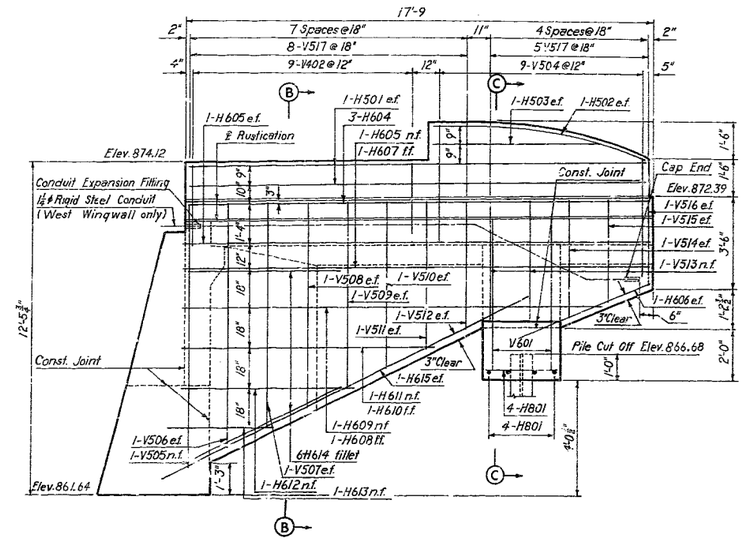

WEST WINGWALL ELEVATION

(East Wingwall Similar Except as Noted)

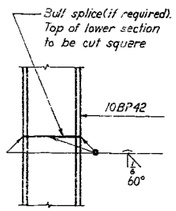

STEEL PILE SPLICE DETAIL

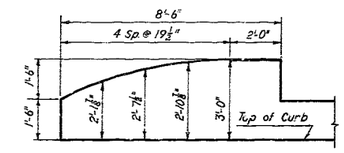

END POST ORDINATES

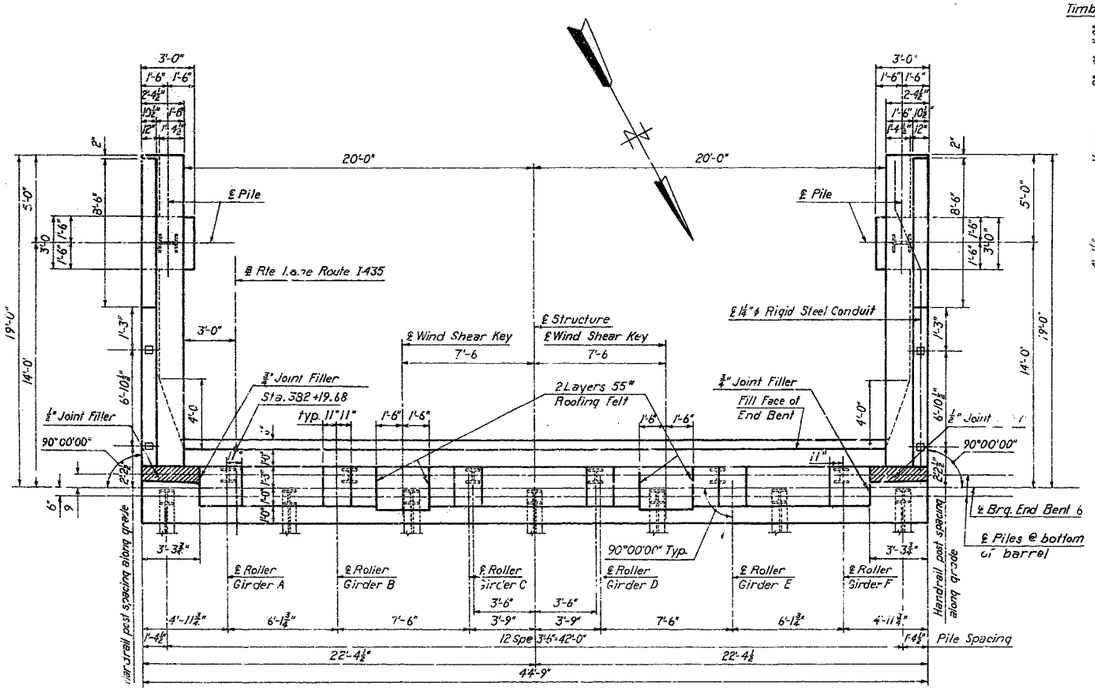

PLAN

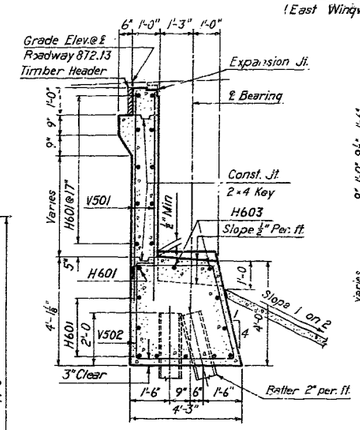

SECTION A-A

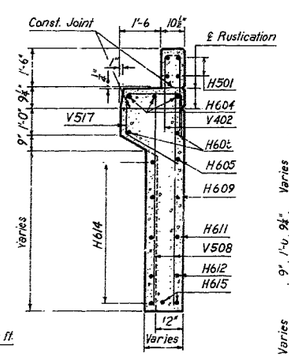

SECTION B-B

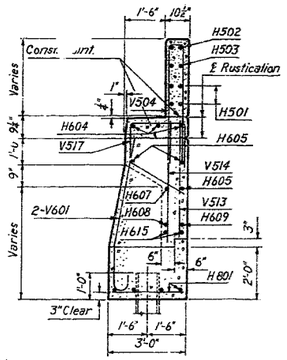

SECTION C-C

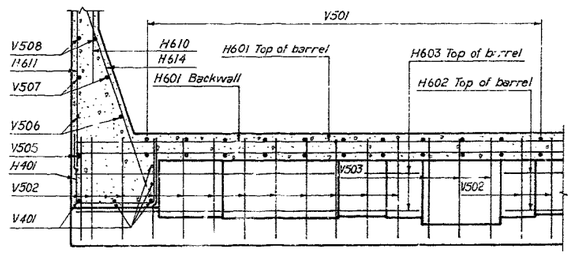

SECTION D-D

LEGEND

n.f. = Near face
f.f. = Far face
e.f. = Each face

Note:
All piles are 10BP42
Dimensions to surfaces receiving joint filler are to face of concrete.

BRIDGE: RT. LANE RTE. I-435 OVER RAMPS "H," "E" & "F" & RTE. I-70

STATE ROAD - ROUTES I-435 & I-70 INTERCHANGE
FROM ROUTE 40 TO LEEDS ROAD
PROJECT NO. I-435-1(24) (RTE. I-435) STA. 390+26.54 (RT. LANE)

JACKSON COUNTY

A-992

HOWARD, NEEDLES, TAMMEN & BERGENDOFF
CONSULTING ENGINEERS
KANSAS CITY — NEW YORK

MADE L.J.R.	DATE 1-23-62	TRACED	DATE
CHECKED S.A.L.	DATE 3-1-62	SCALE	

NOTE: This drawing is not to scale. Follow dimensions.

DETAILS OF END BENT 6

SHEET 7 OF 15

328

MISSOURI STATE HIGHWAY DEPARTMENT

FED. ROAD DIV. NO.	STATE	FEDERAL PROJECT NO. & SEC.	FISCAL YEAR	SHEET NO.	TOTAL SHEETS
5	MO			63	
DIST. NO.	COUNTY		ROUTE	SEC.	
4	JACKSON				

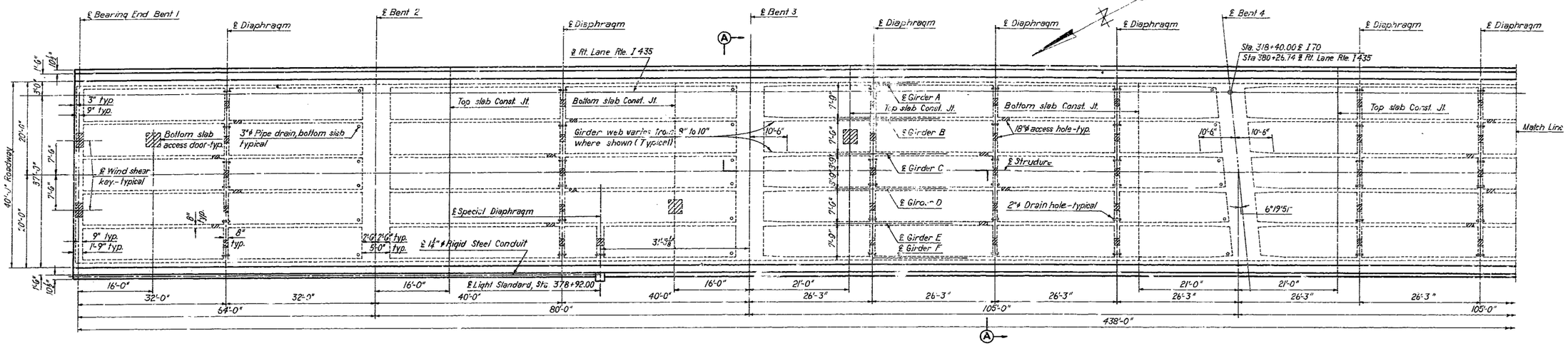

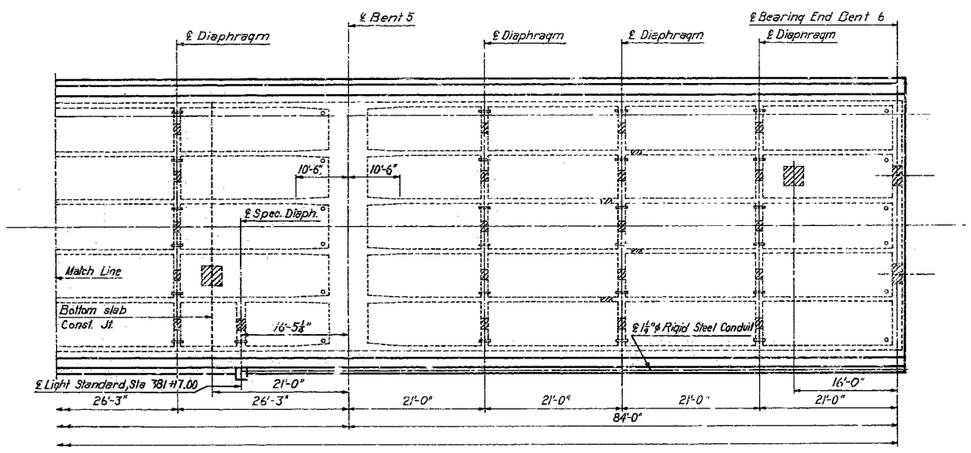

FRAMING PLAN

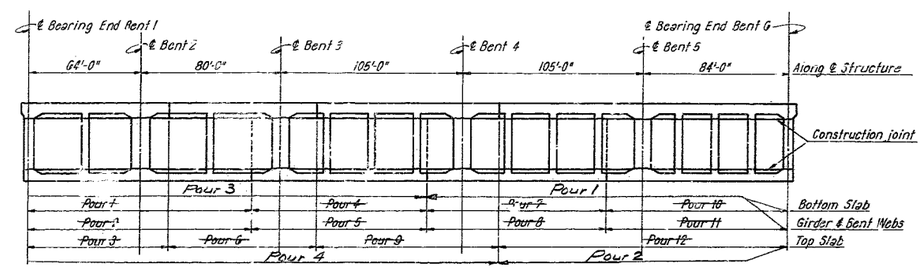

POURING SEQUENCE

Pouring Roadway Slabs

No longitudinal construction joints will be permitted unless shown on plans. The contractor shall use an approved oscillating screed type, self-propelled mechanical finisher ~~and shall observe the basic pouring sequence unless he can demonstrate to the satisfaction of the engineer that he is equipped to pour and satisfactorily finish the roadway slabs at a rate which will permit the combining of such of the basic pours as may be specifically designated by the engineer and not required for design reasons.~~ With use of forms and falsework meeting the approval of the engineer, the girder webs and diaphragms ~~may~~ be poured with the bottom slab sections on which they bear.

Note:
All forms are to be removed from the interior of box girders except top slab forms as indicated in Section 53.4.2.4 of the Standard Specifications.
All dimensions are horizontal.

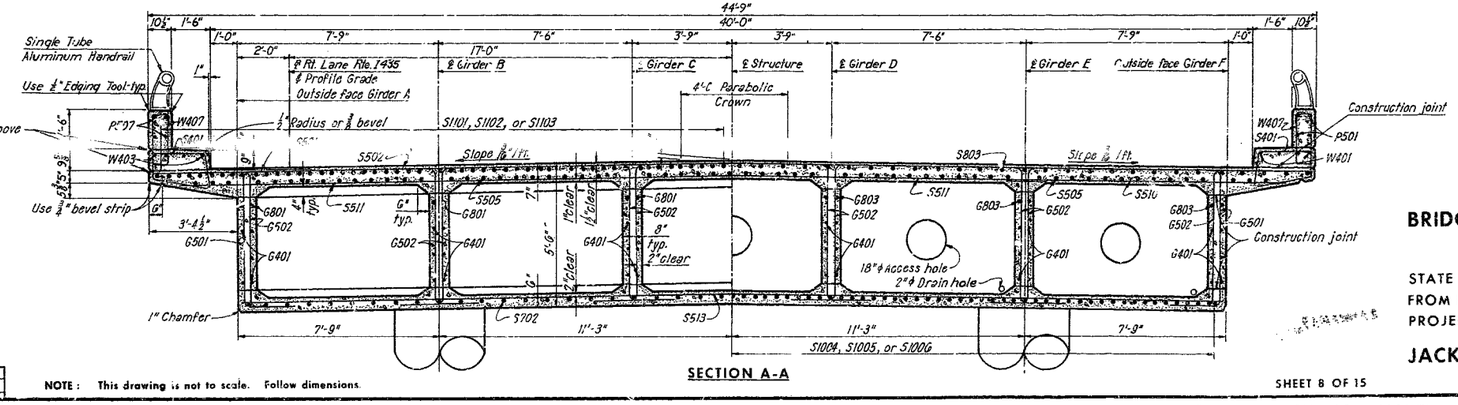

SECTION A-A

HOWARD NEEDLES, TAMMEN & BERGENDOFF
CONSULTING ENGINEERS
KANSAS CITY NEW YORK

MADE L.J.R. & G.L.C.	DATE 2-19-62	TRACED	DATE
CHECKED J.W.L.	DATE 3-23-62	SCALE	

NOTE: This drawing is not to scale. Follow dimensions.

BRIDGE: RT. LANE RTE. I-435 OVER RAMPS "H," "E" & "F" & RTE I-70

STATE ROAD - ROUTES I-435 & I-70 INTERCHANGE
FROM ROUTE 40 TO LEEDS ROAD
PROJECT NO. I-435-1(24)(RTE. I-435) STA. 380+26.54 (RT. LANE)

JACKSON COUNTY

SHEET 8 OF 15

A-992

329

CONSTRUCTION CHANGES NOTED HEREON

MISSOURI STATE HIGHWAY DEPARTMENT

FED. ROAD DIV. NO.	STATE	FEDERAL PROJECT NO. & SEC.	FISCAL YEAR	SHEET NO.	TOTAL SHEETS
5	MO			64	
DIST. NO.	COUNTY			MONTH	SEC.
4	JACKSON				

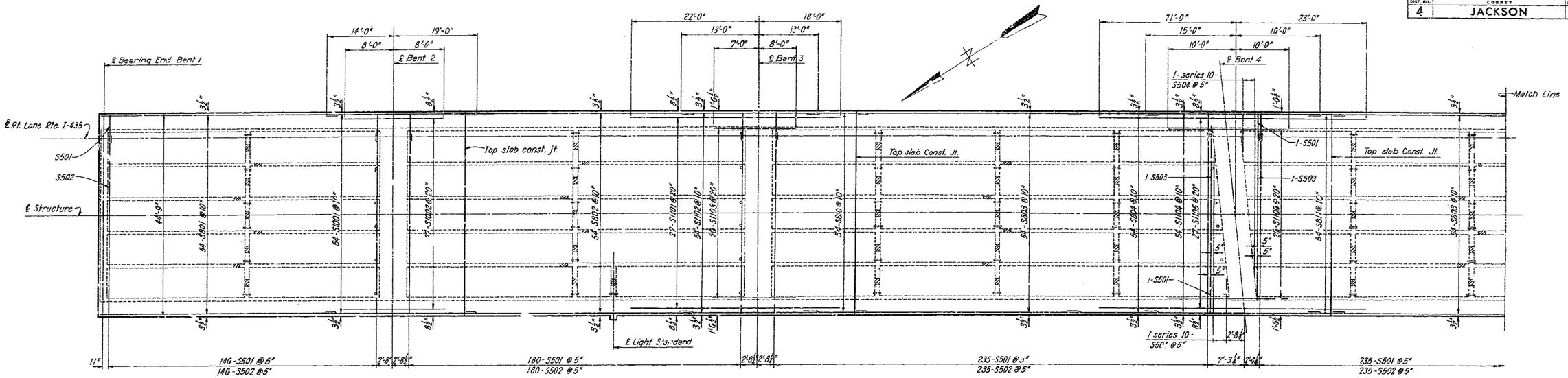

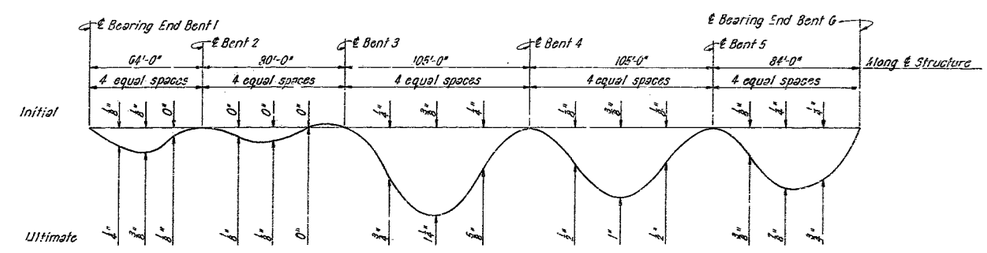

DEAD LOAD DEFLECTION DIAGRAM

Note:
All dimensions are horizontal.

Forms shall be constructed for ultimate deflection.

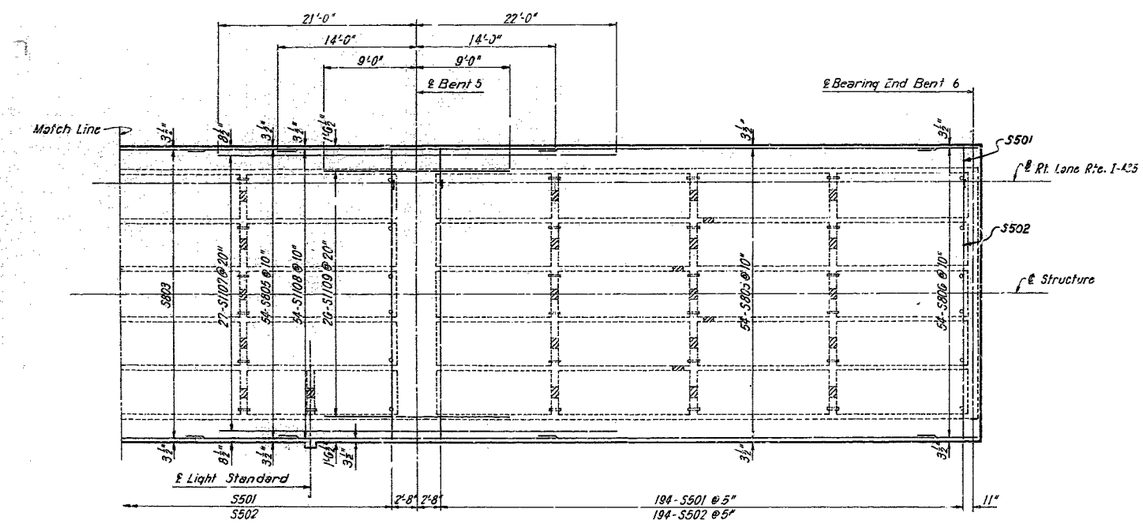

TOP OF TOP SLAB REINFORCEMENT

BRIDGE: RT. LANE RTE. I-435 OVER RAMPS "H," "E" & "F" & RTE. I-70

STATE ROAD - ROUTES I-435 & I-70 INTERCHANGE
FROM ROUTE 40 TO LEEDS ROAD
PROJECT NO. I-435-1(27)(RTE. I-435) STA. 380+26.54 (RT. LANE)

JACKSON COUNTY

A-992

HOWARD, NEEDLES, TAMMEN & BERGENDOFF
CONSULTING ENGINEERS
KANSAS CITY NEW YORK

MADE GLC	DATE 1-15-62	TRACED	DATE
CHECKED CGP	DATE 2-2-62	SCALE	

NOTE: This drawing is not to scale. Follow dimensions.

SHEET 9 OF 15

330

NO CONSTRUCTION CHANGES

MISSOURI STATE HIGHWAY DEPARTMENT

FED. ROAD DIV. NO.	STATE	FEDERAL PROJECT NO. & SEC.	FISCAL YEAR	SHEET NO.	TOTAL SHEETS
5	MO			6	
DIST. NO. 4	COUNTY JACKSON		ROUTE	SEC.	

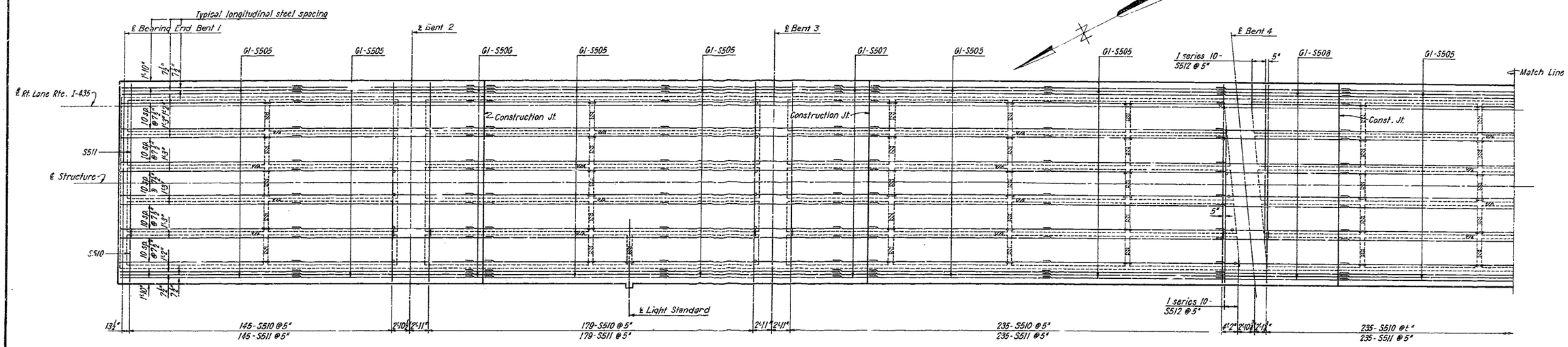

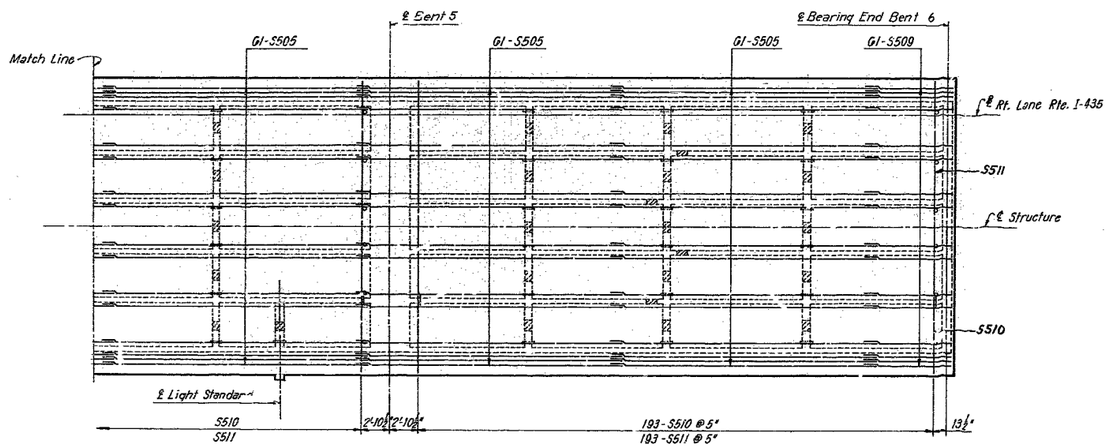

BOTTOM OF TOP SLAB REINFORCEMENT

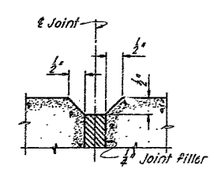

DEFLECTION JOINT DETAILS

Note: All reinforcement shall stop 2" clear of joints.

Note: All dimensions are horizontal.

BRIDGE: RT. LANE RTE. I-435 OVER RAMPS "H," "E" & "F" & RTE. I-70

STATE ROAD - ROUTES I-435 & I-70 INTERCHANGE
FROM ROUTE 40 TO LEEDS ROAD
PROJECT NO. I-435-1(24)(RTE. I-435) STA. 380+26.54 (RT. LANE)

JACKSON COUNTY

HOWARD, NEEDLES, TAMMEN & BERGENDOFF
CONSULTING ENGINEERS
KANSAS CITY NEW YORK

MADE GLL	DATE 1-17-62	TRACED	DATE
CHECKED CGP	DATE 3-21-62	SCALE	

NOTE: This drawing is not to scale. Follow dimensions.

SHEET 10 OF 15

A-992

NO CONSTRUCTION CHANGES

331

MISSOURI STATE HIGHWAY DEPARTMENT

FED. ROAD DIV. NO.	STATE	FEDERAL PROJECT NO. & SEC.	FISCAL YEAR	SHEET NO.	TOTAL SHEETS
5	MO			36	
DIST. NO.	COUNTY		ROUTE	SEC.	
4	JACKSON				

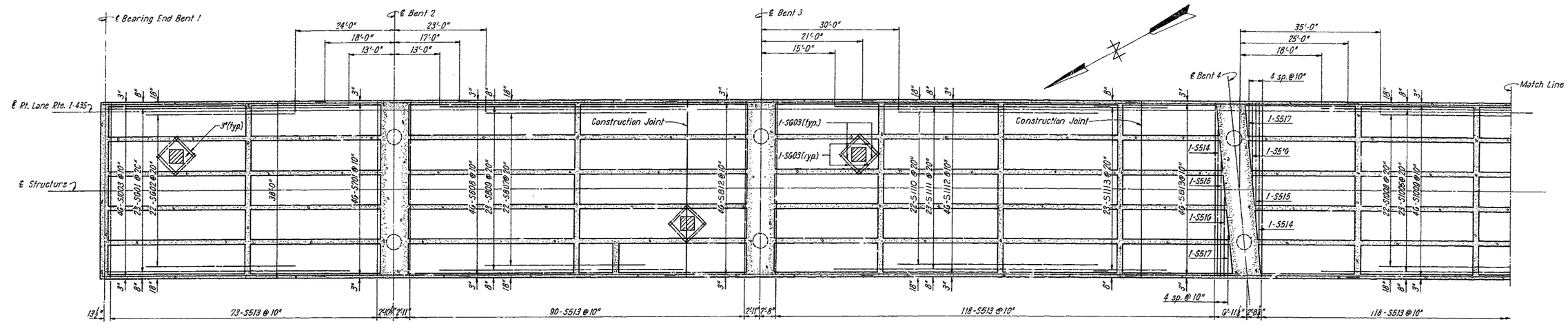

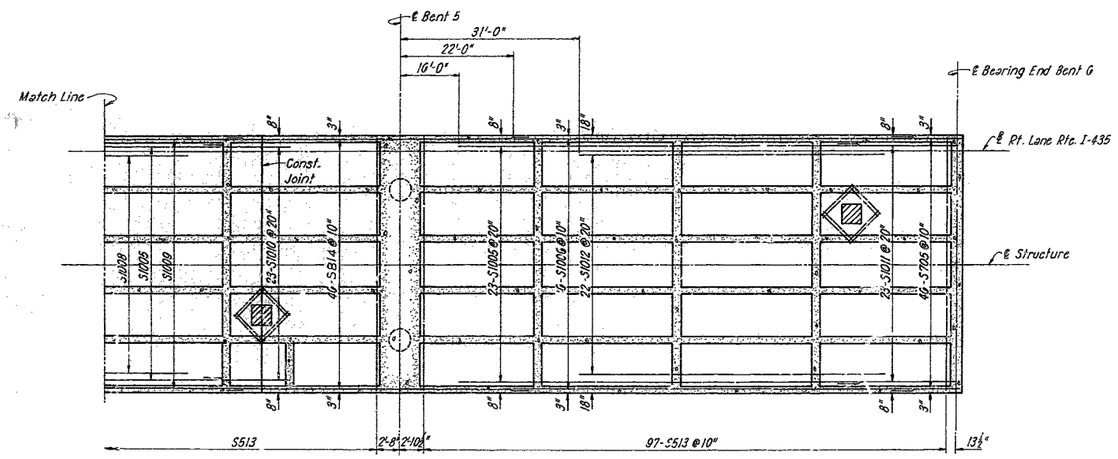

BOTTOM SLAB REINFORCEMENT

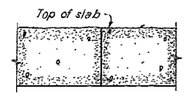

UNDER CURB

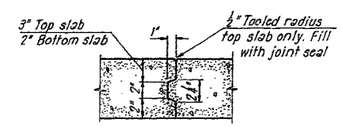

TRANSVERSE SLAB

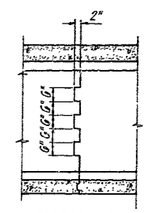

GIRDER WEB

CONSTRUCTION JOINT DETAILS

Note:
Cut or bend reinforcement in field to miss access doors.
All dimensions are horizontal.

332

BRIDGE: RT. LANE RTE. I-435 OVER RAMPS "H," "E" & "F" & RTE. I-70

STATE ROAD - ROUTES I-435 & I-70 INTERCHANGE
FROM ROUTE 40 TO LEEDS ROAD
PROJECT NO. I-435-1(24)(RTE. I-435) STA. 380+26.54 (RT. LANE)

JACKSON COUNTY

HOWARD, NEEDLES, TAMMEN & BERGENDOFF
CONSULTING ENGINEERS
KANSAS CITY NEW YORK

MADE BLC	DATE 1-18-62	TRACED	DATE
CHECKED CGP	DATE 3-8-62	SCALE	

NOTE: This drawing is not to scale. Follow dimensions.

SHEET 11 OF 15

A-992

MISSOURI STATE HIGHWAY DEPARTMENT

FED. ROAD DIST. NO.	STATE	FEDERAL PROJECT NO. & SEC.	FISCAL YEAR	SHEET NO.	TOTAL SHEETS
5	MO			67	
DIST. NO.	COUNTY			ROUTE	SEC.
4	JACKSON				

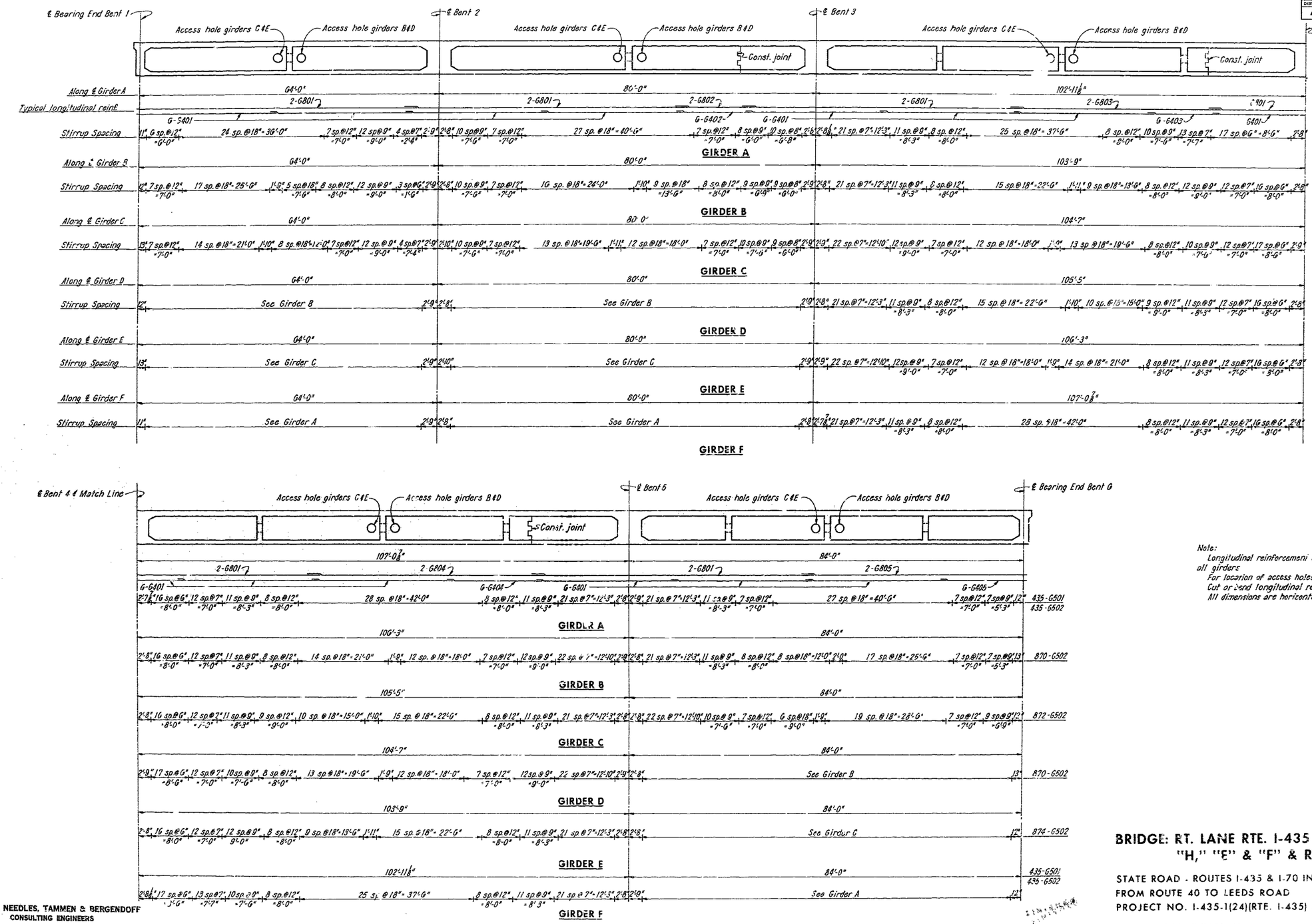

Note:
Longitudinal reinforcement shown for girder A is typical for all girders
For location of access holes and construction joints, see sheets 11 and 14.
Cut or bend longitudinal reinforcement in field to miss access holes.
All dimensions are horizontal.

GIRDER WEB REINFORCEMENT

NOTE: This drawing is not to scale. Follow dimensions.

HOWARD, NEEDLES, TAMMEN & BERGENDOFF
CONSULTING ENGINEERS
KANSAS CITY NEW YORK

MADE SLC DATE 1-22-62 TRACED DATE
CHECKED CGF DATE 3-8-62 SCALE

BRIDGE: RT. LANE RTE. I-435 OVER RAMPS "H," "E" & "F" & RTE. I-70

STATE ROAD - ROUTES I-435 & I-70 INTERCHANGE
FROM ROUTE 40 TO LEEDS ROAD
PROJECT NO. I-435-1(24)(RTE. I-435) STA. 380+26.54 (RT. LANE)

JACKSON COUNTY

SHEET 12 OF 15

NO CONSTRUCTION CHANGES

A-992

333

MISSOURI STATE HIGHWAY DEPARTMENT

FED. ROAD DIST. NO.	STATE	FEDERAL PROJECT NO. & SEC.	FISCAL YEAR	SHEET NO.	TOTAL SHEETS
5	MO			66	
DIST. NO.	COUNTY		ROUTE	SEC.	
4	JACKSON				

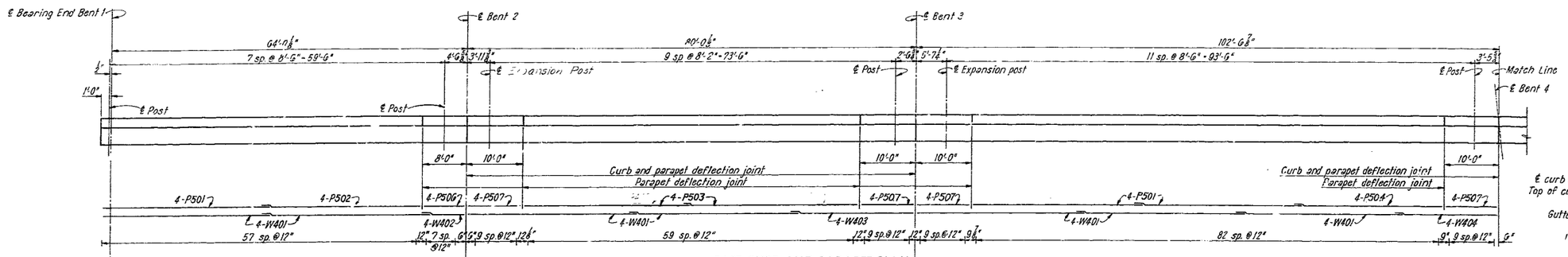

EAST CURB AND PARAPET PLAN

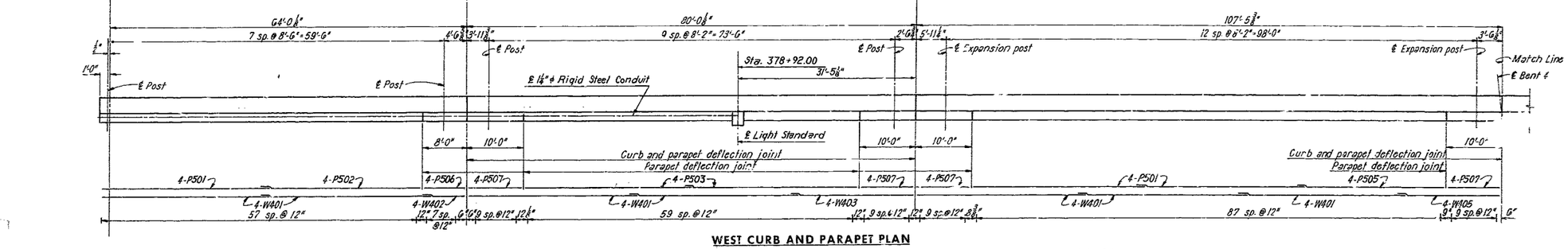

WEST CURB AND PARAPET PLAN

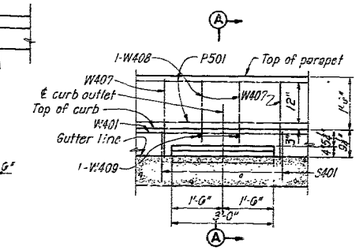

CURB OUTLET ELEVATION

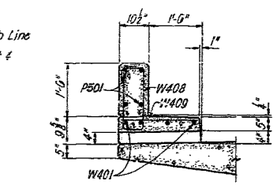

SECTION A-A

CURB OUTLET DETAILS

20 Curb outlets required

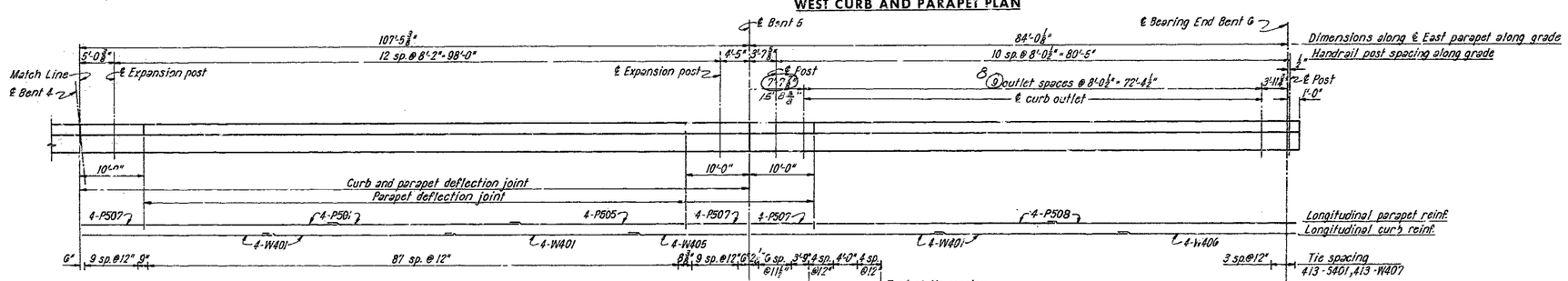

EAST CURB AND PARAPET PLAN

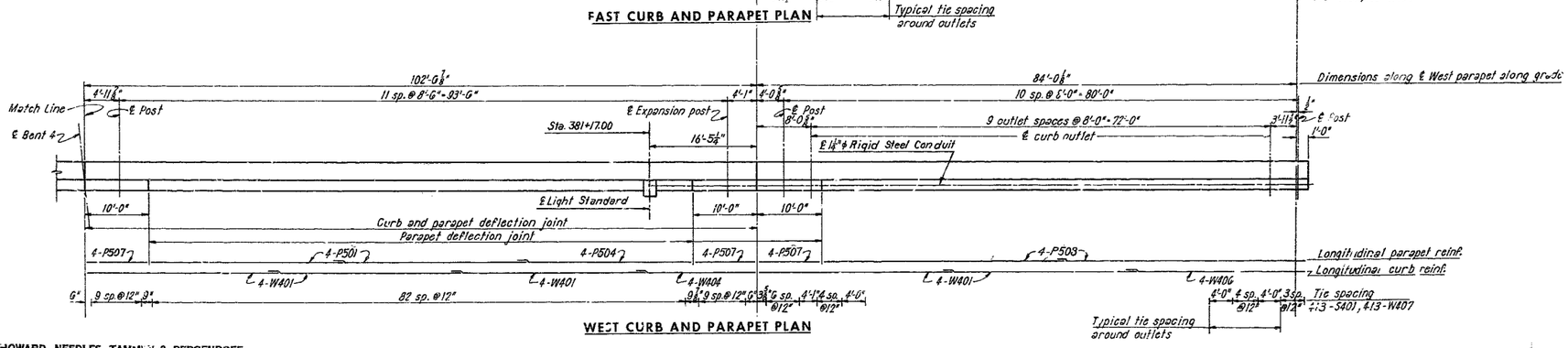

WEST CURB AND PARAPET PLAN

Note:
For continuation of handrail post spacing on End Bents, see sheets 5 and 7.

BRIDGE: RT. LANE RTE. I-435 OVER RAMPS "H," "E" & "F" & RTE. I-70

STATE ROAD - ROUTES I-435 & I-70 INTERCHANGE
FROM ROUTE 40 TO LEEDS ROAD
PROJECT NO. I-435-1(24)(RTE. I-435) STA. 380+26.54 (RT. LANE)

JACKSON COUNTY

HOWARD, NEEDLES, TAMMEN & BERGENDOFF
CONSULTING ENGINEERS
KANSAS CITY NEW YORK

LANE GLC	DATE 1-23-62	TRACED	DATE
CHECKED CCP	DATE 3-8-62	SCALE	

NOTE: This drawing is not to scale. Follow dimensions.

SHEET 13 OF 15

A-992

334

CONSTRUCT... SEE NOTES HEREON

MISSOURI STATE HIGHWAY DEPARTMENT

FED. ROAD DIV. NO.	STATE	FEDERAL PROJECT NO. & SEC.	FISCAL YEAR	SHEET NO.	TOTAL SHEETS
5	MO			69	
DIST. NO.	COUNTY		ROUTE	SEC.	
4	JACKSON				

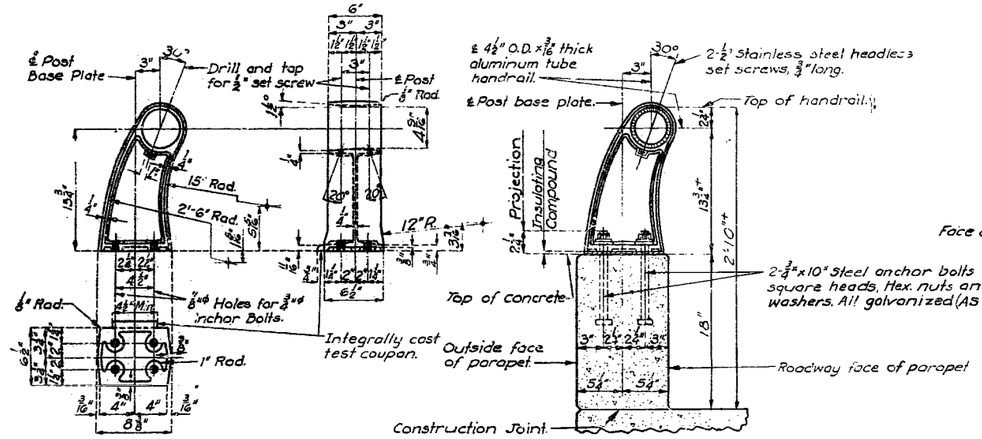

HANDRAIL POST

SECTION THRU HANDRAIL

SINGLE TUBE ALUMINUM RAILING

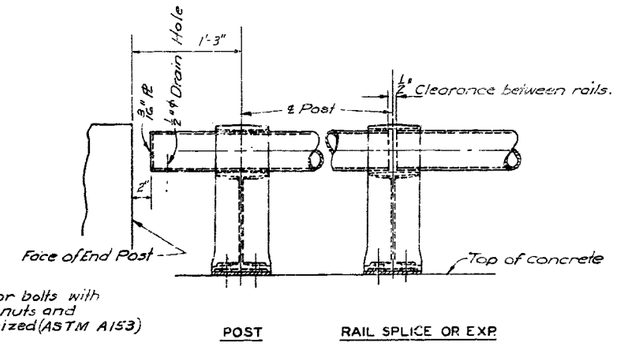

POST

RAIL SPLICE OR EXP.

TYPICAL HANDRAIL DETAILS

Note: All handrail posts shall be set normal to grade.

Aluminum tube handrail shall be bent to conform to vertical and horizontal alignment of parapet.

Aluminum washer shims between top of parapet and post base may be used for adjusting handrail alignment. Maximum thickness of shims to be ⅛". Where more tilting of post is required for proper alignment, concrete bearing areas shall be ground down.

All parts of handrail, except anchor bolts, nuts, washers, and set screws are to be of aluminum material.

The contract unit price per linear foot of "Bridge Rail (Single Tube Type)" shall include furnishing and erecting the handrail complete with anchor bolts, shims and Insulating Compound.

All fillets ¼" except as noted.

All draft 3° except as noted.

Pipe rail to be fabricated in two or three panel lengths unless otherwise approved.

Omit set screw on side near filled joint in parapet at all expansion posts.

Top of curbs and parapets to be built parallel to grade. Vertical faces of end posts to be vertical.

All exposed edges of end posts and parapets to be beveled ½".

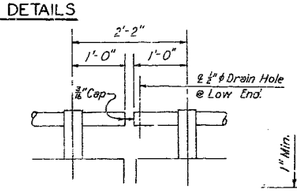

AT EXPANSION JOINT

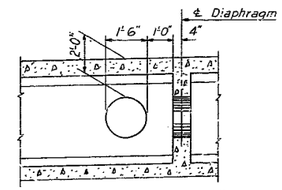

GIRDER WEB ACCESS HOLE

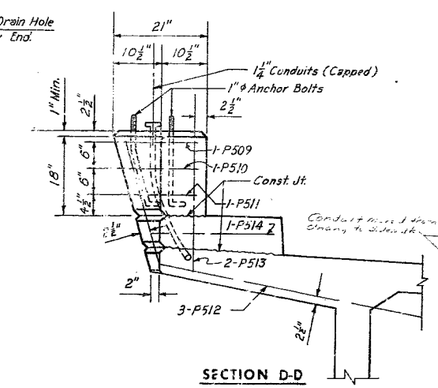

SECTION D-D

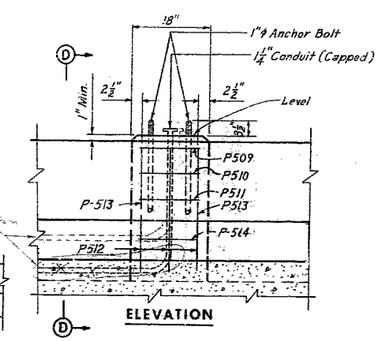

ELEVATION

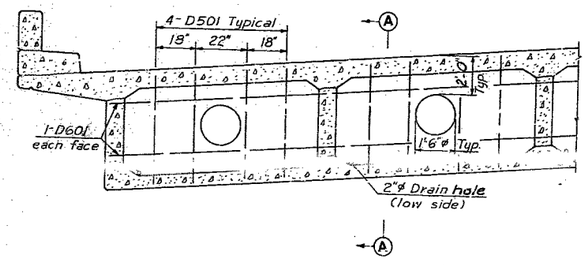

DIAPHRAGM DETAILS

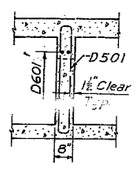

SECTION A-A

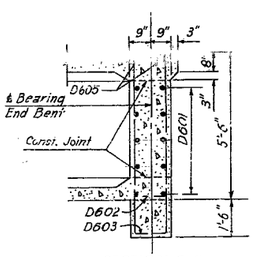

SECTION C-C

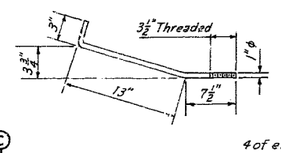

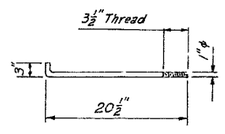

4 of each type required

ANCHOR BOLTS

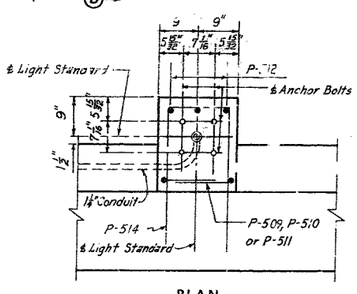

PLAN

Note:
Bolts shall be furnished complete with 2 Standard Hex. Nuts and Washers, all galvanized. Payment for furnishing and installing bolts shall be included in price bid for other items.

DETAILS OF LIGHT STANDARD SUPPORT

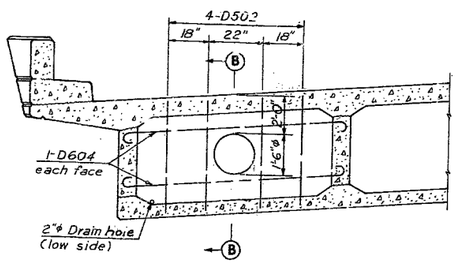

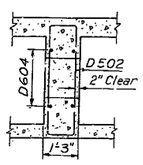

SECTION B-B

SPECIAL DIAPHRAGM

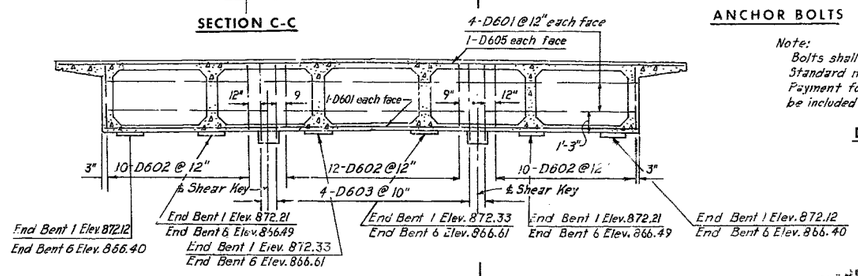

END DIAPHRAGMS

HOWARD, NEEDLES, TAMMEN & BERGENDOFF
CONSULTING ENGINEERS
KANSAS CITY NEW YORK

MADE JLW	DATE 2-20-62	TRACED	DATE
CHECKED LJR	DATE 3-15-62	SCALE	

NOTE: This drawing is not to scale. Follow dimensions.

SHEET 14 OF 15

BRIDGE: RT. LANE RTE. I-435 OVER RAMPS "H," "E" & "F" & RTE. I-70

STATE ROAD - ROUTES I-435 & I-70 INTERCHANGE
FROM ROUTE 40 TO LEEDS ROAD
PROJECT NO. I-435-1(24)(RTE. I-435) STA. 380+26.54 (RT. LANE)

JACKSON COUNTY

A-992

335

CONSTRUCTION CHANGES NOTED HEREON (22 Mar 64)

MISSOURI STATE HIGHWAY DEPARTMENT

FED. ROAD STA. NO.	STATE	FEDERAL PROJECT No. & SEC.	FISCAL YEAR	SHEET NO.	TOTAL SHEETS
5	MO			70	
DIST. NO.	COUNTY		ROUTE	SEC.	
4					

Note:

Approved stud welded anchors may be used in lieu of #5 bars shown.

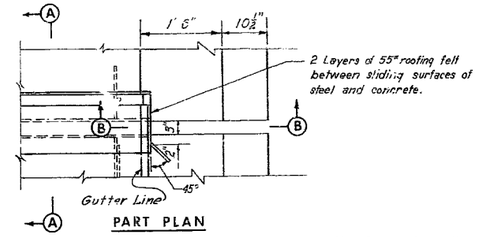

PART PLAN

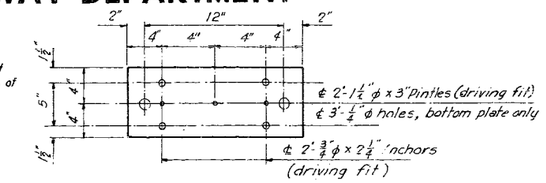

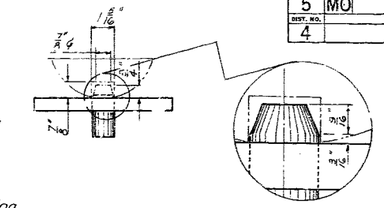

No. of expansion rollers required:
End bent #1 = 6
End bent #6 = 6

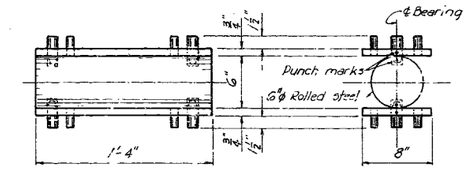

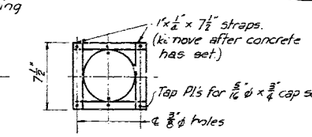

Note:
Top and bottom plates to be U55 T-1 Alloy or equivalent. Materials for pintles and rollers shall be cold finished carbon steel A151 = C1042 or C1045 (turned and polished).
All bearing plates shall be straightened to plane surfaces.
E 6015 or E 6016 welding electrodes shall be used.
Paint: Shop: One coat red lead except top surface of top plate and bottom surface of bottom plate.
Field: All exposed surfaces first coat brown, second coat aluminum.

EXPANSION ROLLER

¼ϕ bolts @ 6'-0 ctrs. Jack weld nut to bottom of angle. Remove bolts within two hours after top slab is poured.

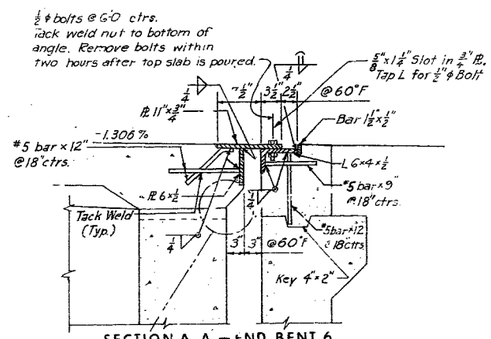

SECTION A-A — END BENT 6
(End Bent 1 Similar)

Note: #5 bars used as Expansion Joint anchors to be structural grade steel.

Note: Backwall to be poured and forms to be removed prior to pouring of top slab of box girder.

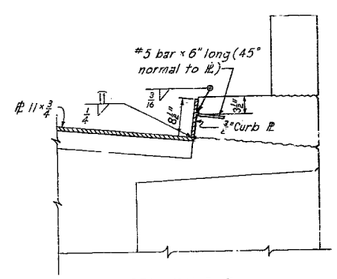

SECTION B-B

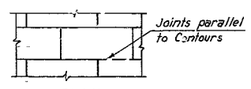

PLAN

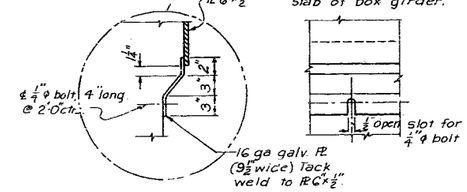

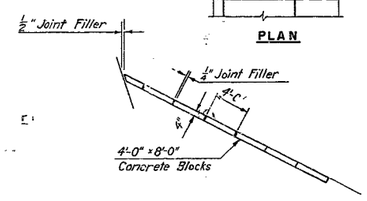

SLOPE PROTECTION

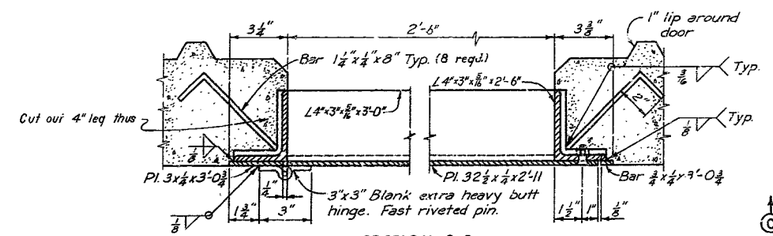

SECTION C-C

Note:
Access Doors to be assembled and in place while slab is being poured.
Bottom surface of door to be flush with bottom of slab.

Payment for furnishing and placing access doors and frames shall be made and considered fully covered under price bid for Fabricated Structural Carbon Steel.

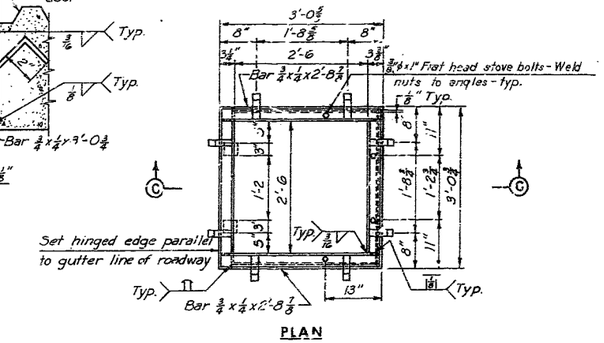

PLAN

BOTTOM SLAB ACCESS DOOR DETAILS

No. of doors required - 5
Note: Weight of one door and frame is approximately 181 lbs.

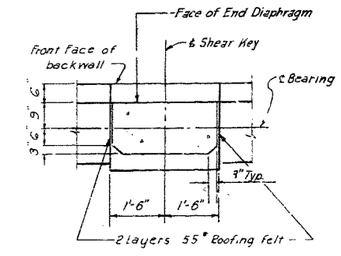

SHEAR KEY DETAIL

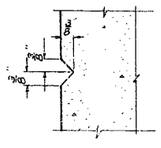

RUSTICATION DETAIL

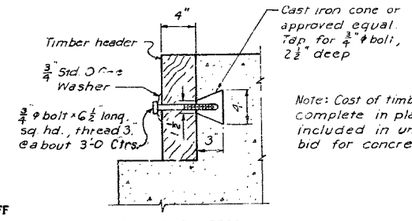

Note: Cost of timber headers, complete in place, to be included in unit price bid for concrete.

TIMBER HEADER DETAIL

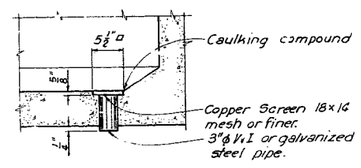

Note:
If galvanized steel pipe is used, the screen shall be aluminum.
Cost of furnishing and placing pipe, screen, and caulking compound shall be included in price bid for other items of work.

BOTTOM SLAB DRAIN

BRIDGE: RT. LANE RTE. I-435 OVER RAMPS "H," "E" & "F" & RTE. I-70

STATE ROAD - ROUTES I-435 & I-70 INTERCHANGE
FROM ROUTE 40 TO LEEDS ROAD
PROJECT NO. I-435-1(24)(RTE. I-435) STA. 380+26.54 (RT. LANE)

JACKSON COUNTY

A-992

HOWARD, NEEDLES, TAMMEN & BERGENDOFF
CONSULTING ENGINEERS
KANSAS CITY NEW YORK

MADE JLW	DATE 2-20-62	TRACED	DATE
CHECKED L.J.R.	DATE 3-12-62	SCALE	

NOTE: This drawing is not to scale. Follow dimensions.

SHEET 15 OF 15

NO CONSTRUCTION CHANGES

336

MISSOURI STATE HIGHWAY DEPARTMENT

FED. ROAD DIV. NO.	STATE	FEDERAL PROJECT NO. & SEC.	FISCAL YEAR	SHEET NO.	TOTAL SHEETS
5	MO	I-435-1(24)18		5	
DIST. NO.	COUNTY			ROUTE	SEC.
4	JACKSON			I-435	

FINAL PLANS

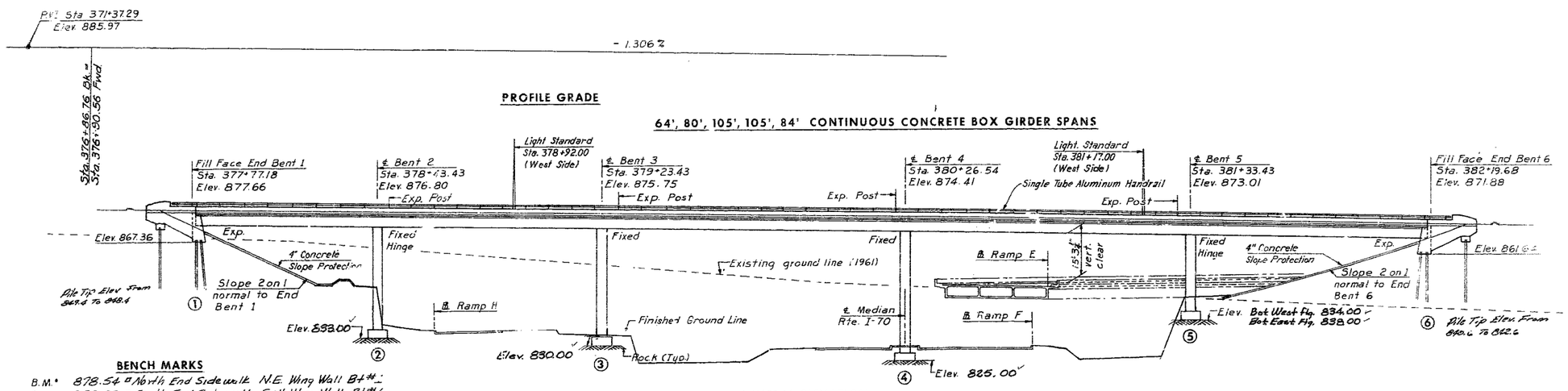

Note Roadway excavation was completed adjacent to this site before structure was started. See Special Provisions.
Concrete slope protection on front slopes at end bents was included under road contract. Provide ½" filler between slope protection pavement and end bents. Concrete slope protection was extended a minimum of 6" into rock or shale. Joints did consist of material conforming to section 157.1.7 of the Standard Specifications.
Compacted roadway fill (full roadway width) was placed up to elevation of bottom of concrete beam in front of and not less than 25'-0" in back of End Bent No. 6 before steel piles driven for Bent No. 6.
For location of piles in End Bents see Sheets 5 and 7.
All dimensions shown are horizontal.

SUBMITTED BY R. N. Bergendoff
REGISTERED PROFESSIONAL ENGINEER
MISSOURI NO. E-253

FINISHED

BRIDGE: RT. LANE RTE I-435 OVER RAMPS "H" "E" & "F" & RTE. I-70

STATE ROAD - ROUTES I-435 & I-70 INTERCHANGE
FROM ROUTE 40 TO LEEDS ROAD
PROJECT NO. I-435-1(24)(RTE. I-435) STA 380+26.54(RT. LANE)

JACKSON COUNTY

SUBMITTED BY R. N. Bergendoff DATE 3/23/62 FINISHED
BRIDGE ENGINEER
APPROVED BY H. Covell DATE 3/23/62
CHIEF ENGINEER

FINISHED

SHEET 15 OF 53

STD. 54.00
A-992

HOWARD, NEEDLES, TAMMEN, & BERGENDOFF
CONSULTING ENGINEERS
KANSAS CITY NEW YORK

MADE J. WL.	DATE 2-19-62	TRACED	DATE
CHECKED J.L.W.	DATE 2-13-62	SCALE	

NOTE: This drawing is not to scale. Follow dimensions.

FINAL PLANS

337

MISSOURI STATE HIGHWAY DEPARTMENT

FED. ROAD DIV. NO.	STATE	FEDERAL PROJECT NO. & SEC.	FISCAL YEAR	SHEET NO.	TOTAL SHEETS
5	MO	I-435-1(24)18		57	
DIST. NO.		COUNTY		ROUTE	SEC.
4		JACKSON		I-435	

FINAL PLANS

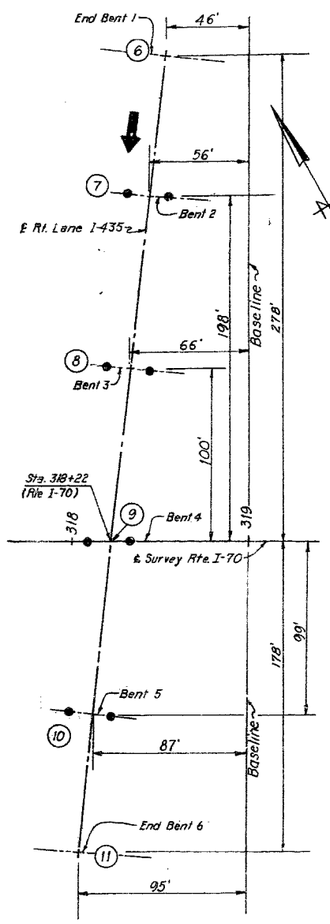

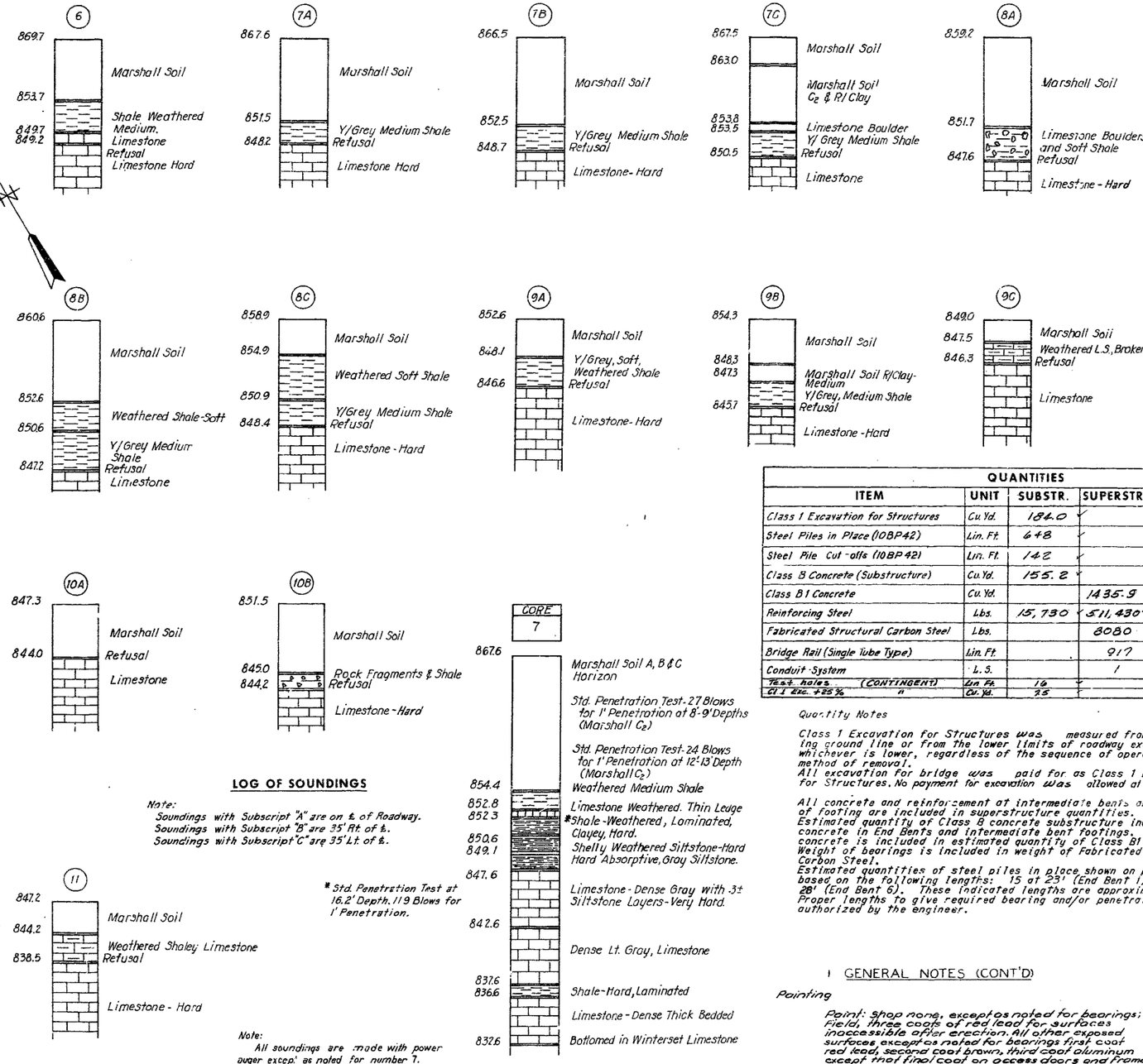

LOG OF SOUNDINGS

Note:
Soundings with Subscript "A" are on ℄ of Roadway.
Soundings with Subscript "B" are 35' Rt. of ℄.
Soundings with Subscript "C" are 35' Lt. of ℄.

* Std. Penetration Test at 16.2' Depth. 119 Blows for 1" Penetration.

Note:
All soundings are made with power auger except as noted for number 7.

GENERAL NOTES

Design Specifications

A.A.S.H.O. 1961.

Design Loading

H20-S16-44 with 15 #/sq.ft. future wearing surface. (Modified 24,000# Tandem Axles.)

Concrete

Concrete Stress - Class B1 fc = 1,600 p.s.i.
Class B fc = 1,200 p.s.i.
Concrete for superstructure was Class B1 air-entrained. Concrete for substructure was Class B air-entrained.

Reinforcing Steel

Allowable stress 20,000 p.s.i. All splices in reinforcing steel were 32 bar diameters.
Bar sizes are designated on the plans by numbers. The first digit after the letter in three digit marks and the first two digits after the letter in four digit marks indicate the size of bar.
Dimensions shown on the plans from the reinforcing steel to outside edge of concrete are all clear dimensions.
All bending dimensions are from "out to out" of bars.

Joint Filler

Where joint filler is specified on the plans it did conform with the requirements for gray sponge rubber compound joints as given in Section 157.2.4 of the Standard Specifications.

Metal Conduits

Expansion fittings required in steel conduit at all expansion joints. Expansion fittings O. Z. Electrical Manufacturing Company Type AX-125 with AJ bonding jumper or equal.

Sealing of Decks

Superstructure deck was surface sealed. See Special Provisions.

Welding

Qualification of welding operators required.

Utilities

All utilities, unless shown otherwise, were removed or relocated by others. The Contractor did notify the owner of the utilities of his work schedule sufficiently in advance to allow time for the disposition of utilities.

Shipping

Permits were obtained for all truck loads over legal length.

Piling

All piles were 10BP42 and did conform with details and notes shown on Sheet No. 5 . All piles were driven to or into solid rock, boulders, shale or cemented gravel, or to not less than full length authorized, and to sustain a load of at least 37 tons per pile for 10BP42.
All piles were driven with a power hammer. See Section 52.47 of Standard Specifications, for required painting of steel piles.

Excavation to Rock

All loose, shelly or disintegrated rock was removed and footings placed on hard, solid, undisturbed rock. If soft rock or shale is encountered, the footings were carried at least 18" into and cast against vertical faces of same. In no case were the footings placed higher than elevations shown. Bearing of 12 tons per sq.ft. was used in design of footings.

QUANTITIES

ITEM	UNIT	SUBSTR.	SUPERSTR.	TOTAL
Class 1 Excavation for Structures	Cu.Yd.	184.0		184.0
Steel Piles in Place (10BP42)	Lin. Ft.	648		648
Steel Pile Cut-offs (10BP42)	Lin. Ft.	142		142
Class B Concrete (Substructure)	Cu.Yd.	155.2		155.2
Class B1 Concrete	Cu.Yd.		1435.9	1435.9
Reinforcing Steel	Lbs.	15,730	511,430	527,160
Fabricated Structural Carbon Steel	Lbs.		8080	8080
Bridge Rail (Single Tube Type)	Lin. Ft.		917	917
Conduit System	L.S.		1	1
Test holes (CONTINGENT)	Lin. Ft.	16		16
Cl 1 Exc. +25% "	Cu. Yd.	7.5		7.5

Quantity Notes

Class 1 Excavation for Structures was measured from the existing ground line or from the lower limits of roadway excavation, whichever is lower, regardless of the sequence of operations or method of removal.
All excavation for bridge was paid for as Class 1 Excavation for Structures. No payment for excavation was allowed at End Bent 6.

All concrete and reinforcement at intermediate bents above top of footing are included in superstructure quantities.
Estimated quantity of Class B concrete substructure includes all concrete in End Bents and intermediate bent footings. All other concrete is included in estimated quantity of Class B1 concrete.
Weight of bearings is included in weight of Fabricated Structural Carbon Steel.
Estimated quantities of steel piles in place shown on plans are based on the following lengths: 15 at 23' (End Bent 1) and 15 at 28' (End Bent 6). These indicated lengths are approximate only. Proper lengths to give required bearing and/or penetration authorized by the engineer.

GENERAL NOTES (CONT'D)

Painting

Paint: Shop none, except as noted for bearings; Field, three coats of red lead for surfaces inaccessible after erection. All other exposed surfaces, except as noted for bearings first coat red lead, second coat brown, third coat aluminum except that final coat on access doors and frames was gray. Payment for paint, cleaning and painting such surfaces was included in the unit price bid for Fabricated Structural Carbon Steel.

FINISHED

SHEET 2A - 3

FINISHED

FINISHED

BRIDGE: RT. LANE RTE. I-435 OVER RAMPS "H," "E" & "F" & RTE. I-70

STATE-ROAD - ROUTES I-435 & I-70 INTERCHANGE
FROM ROUTE 40 TO LEEDS ROAD
PROJECT NO. I-435-1(24)(RTE. I-435) STA. 380+26.54 (RT. LANE)

JACKSON COUNTY

A-992

HOWARD, NEEDLES, TAMMEN & BERGENDOFF
CONSULTING ENGINEERS
KANSAS CITY NEW YORK

MADE JLW	DATE 2-14-62	TRACED	DATE
CHECKED LJR	DATE 3-15-62	SCALE	

NOTE: This drawing is not to scale. Follow dimensions.

338

FINAL PLANS

MISSOURI STATE HIGHWAY DEPARTMENT

FED. ROAD DIV. NO.	STATE	FEDERAL PROJECT NO. & S.C.	FISCAL YEAR	SHEET NO.	TOTAL SHEETS
5	MO	I-435-1(24)8		61	
DIST. NO.	COUNTY			ROUTE	SEC.
4	JACKSON			I-435	

FINAL PLANS

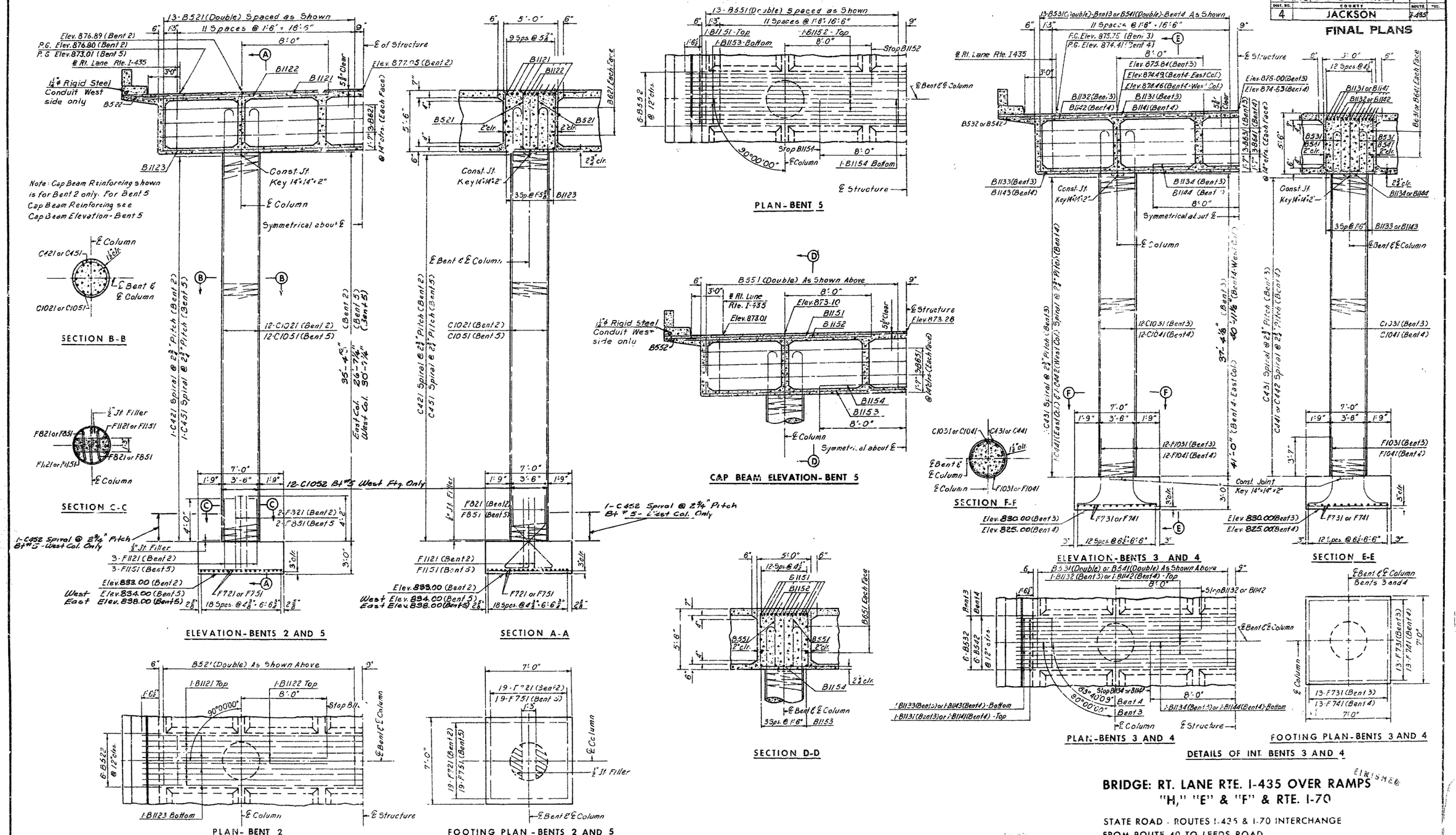

BRIDGE: RT. LANE RTE. I-435 OVER RAMPS "H," "E" & "F" & RTE. I-70

STATE ROAD - ROUTES I-435 & I-70 INTERCHANGE
FROM ROUTE 40 TO LEEDS ROAD
PROJECT NO. I-435-1(24)(RTE. I-435) STA. 380+26.54 (RT. LANE)

JACKSON COUNTY

HOWARD, NEEDLES, TAMMEN & BERGENDOFF
CONSULTING ENGINEERS
KANSAS CITY — NEW YORK

MADE S.H.L.	DATE 1-16-62	TRACED	DATE
CHECKED J.L.W.	DATE 2-28-62	SCALE	

NOTE: This drawing is not to scale. Follow dimensions.

FINISHED

SHEET A-3

A-992

339

FINAL PLANS

MISSOURI STATE HIGHWAY DEPARTMENT

FED. ROAD DIST. NO.	STATE	FED. AID PROJ. NO.	FISCAL YEAR	SHEET NO.	TOTAL SHEETS
5	MO.		19		

(1)

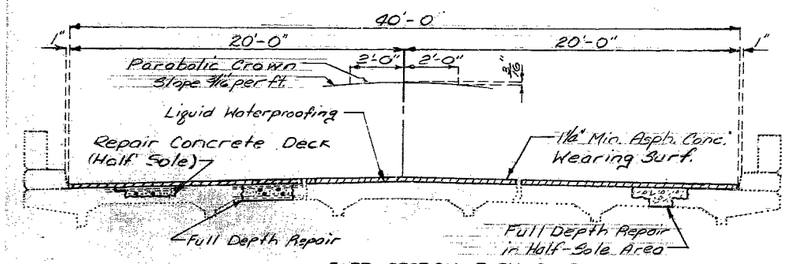

PART SECTION THRU SLAB

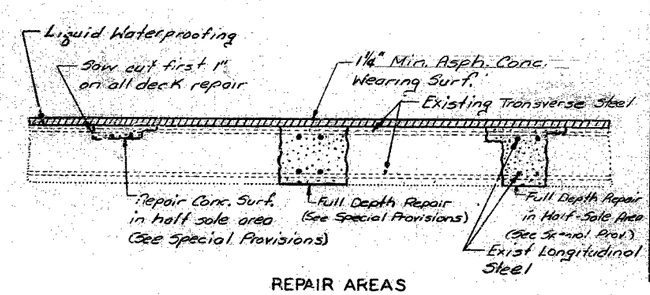

REPAIR AREAS

ESTIMATED QUANTITIES		TOTAL
Repairing Conc. Deck (Half Soling)	Sq. Ft.	352
Full Depth Repair	Sq. Ft.	176
Bridge Deck Waterproofing (Liquid)	Sq. Yd.	1356
Asph. Cement (Asph. Conc.) 60-70 or AC-20	Ton	6.8
Mineral Aggr. (Asph. Conc.) (Type A Mix)	Ton	128
Preformed Compression Expansion Jt. Seal (2) In.	L.F.	40
Preformed Compression Expansion Jt. Seal (2½) In.	L.F.	40

△2½

Note: Outline of old work is indicated by light dotted lines. Heavy lines indicate new work

BRIDGE: RT. LANE RTE. I-435 OVER RAMPS "H" "E" & "F" RTE. I-70

JOB NO. 4-I-435-514

△Revised: 6-8-83 PROJ. NO. IR-4 ;(165)

Sheet No. 1 of 4 JACKSON COUNTY A-992R

90

B.M.

BRIDGE

STATE ROAD

ABOUT

PROJECT NO. IR-435-1(165) **STA.**

JOB NO. 4-I-435-514 **RTE** I-435

Jackson **COUNTY**

DATE

STD.
STD.
A-992R

DESIGNED 19

DETAILED 19

CHECKED 19

Note: This drawing is not to scale. Follow dimensions.

Sheet No. 1 of 4 . SEE FINAL PLATS

MISSOURI STATE HIGHWAY DEPARTMENT

FED. ROAD DIST. NO.	STATE	FED. AID PROJ. NO.	FISCAL YEAR	SHEET NO.	TOTAL SHEETS
5	MO.		19		

(2)

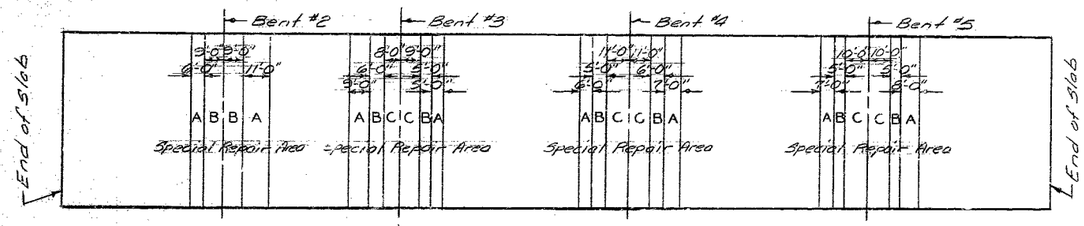

PLAN OF EXISTING SLAB

Note: Any concrete removal for Half-Sole or Full Depth Repair in areas designated "A", "B" & "C" shall be repaired in alphabetical order. (See Special Provisions)

Sheet No. 2 of 4 JACKSON COUNTY A-992R

B.M.

BRIDGE

STATE ROAD

ABOUT

PROJECT NO. IR-435-1(165) **STA.**

JOB NO. 4-I-435-514 **RTE** I-435

Jackson **COUNTY**

DATE

STD.	
STD.	
A-992R	

DESIGNED 19

DETAILED 19

CHECKED 19

Note: This drawing is not to scale. Follow dimensions.

Sheet No. 2 **of** 4 .

91

MISSOURI STATE HIGHWAY DEPARTMENT

FED. ROAD DIST. NO.	STATE	FED. AID PROJ. NO.	FISCAL YEAR	SHEET NO.	TOTAL SHEETS
5	MO.		19		

(3)

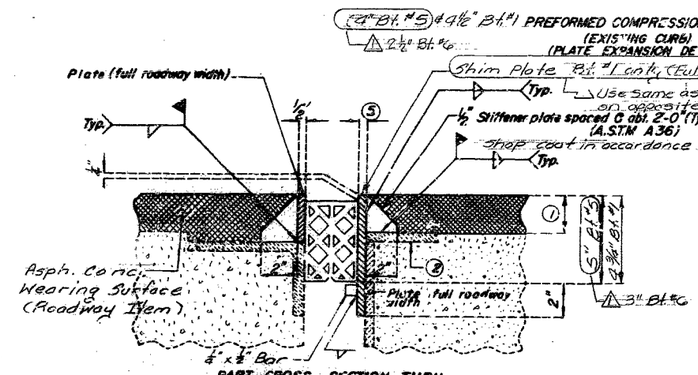

PART CROSS SECTION THRU EXPANSION JOINT

Note: Use ½" shim plate Bt. #1 only. See (2) or Bt. #5 — Omit

1. 1½" Asphalt Concrete Wearing Surface.
2. Cut and smooth existing expansion device plate flush with existing expansion gap.
3. Curb plate (A.S.T.M. A36) shall be galvanized in accordance with A.S.T.M. A123 and A.S.T.M. A153.
4. Concrete anchors shall be the cone expansion type for hot-dip galvanized bolts or Cast-In-Place Conc. Anchors
5. If Plate thickness is less than a ¼" then a ½" wide plate shall be used with the height measured from top of existing expansion device plate to top of wearing surface.

For location of (3) and (2) see Sh. No. 4

TABLE OF TRANSVERSE SEAL TOLERANCES
(INCHES)

TYPE	"A" (WIDTH)	"B" (HEIGHT)	"C" (SHELL)	"D" (WEBS)	"E"(B3 ONLY) (SMALL WEBS)	
AI OR B3	2.500 +.250 −.000	2.750 +.125 −.125	0.187 +.046 −.015	0.093 +.031 −.015	0.062 +.031 −.031	Bt. #6
AI OR B3	3.000 +.250 −.000	3.408 +.187 −.187	0.187 +.046 −.015	0.125 +.046 −.015	0.075 +.046 −.031	
AI OR B3	3.500 +.250 −.000	3.500 +.187 −.187	0.187 +.046 −.015	0.125 +.046 −.015	0.097 +.046 −.031	
AI OR B3	4.000 +.312 −.000	4.718 +.250 −.250	AI: 0.250 +.046 −.031; B3: 0.235 +.046 −.031	0.187 +.046 −.015	0.111 +.046 −.031	Bt. #5 — Omit
AI OR B3	4.500 +.312 −.000	4.500 +.250 −.250	0.250 +.046 −.031	0.187 +.046 −.015	0.111 +.046 −.031	Bt. #1

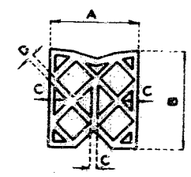

TYPE AI

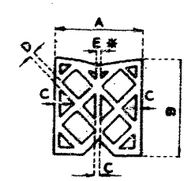

TYPE B3

* OPTIONAL "C"

Revised 10-8-83

Note: Plan dimensions are based on right angles.
See Special Provisions for requirements of the compression seal.
Sheet No. 3 of 4

JACKSON COUNTY A-992R

B.M.

BRIDGE

STATE ROAD

ABOUT

PROJECT NO. IR-435-1(165) STA.

JOB NO. 4-I-435-514 RTE. I-435

Jackson COUNTY

DATE

STD.	
STD.	
A-992R	

DESIGNED 19
DETAILED 19
CHECKED 19

Note: This drawing is not to scale. Follow dimensions.

Sheet No. 3 of 4.

92

MISSOURI STATE HIGHWAY DEPARTMENT

FED. ROAD DIST. NO.	STATE	FED. AID PROJ. NO.	FISCAL YEAR	SHEET NO.	TOTAL SHEETS
5	MO.		19		

Note: For ①, ③ and ④, see sh No. 3

4

Compression seal and Plates shall be bent to conform to new crown and grade of roadway.
2-layers of 50# roofing felt shall be placed between curb plate and recess in curb.

See Special Provisions for modification of expansion device and installation of seal and curb plates

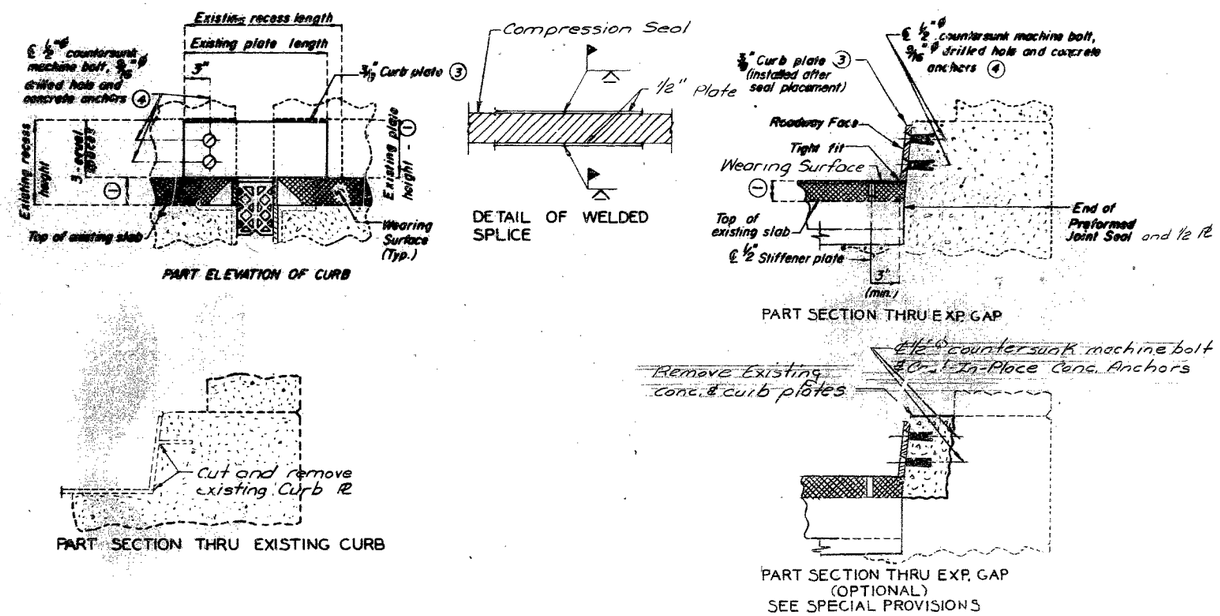

Sheet No. 4 of 4

JACKSON COUNTY A-992R

B.M.

BRIDGE

STATE ROAD

ABOUT

PROJECT NO. IR-435-1(165) **STA.**

JOB NO. 4-I-435-514 **RTE**

Jackson **COUNTY**

STD.	
STD.	
A-992R	

DATE

DESIGNED	19
DETAILED	19
CHECKED	19

Note: This drawing is not to scale. Follow dimensions.

Sheet No. 4 of 4

93

MISSOURI STATE HIGHWAY DEPARTMENT

FED. ROAD DIST. NO.	STATE	FED. AID PROJ. NO.	FISCAL YEAR	SHEET NO.	TOTAL SHEETS
5	MO.		19		

(1)

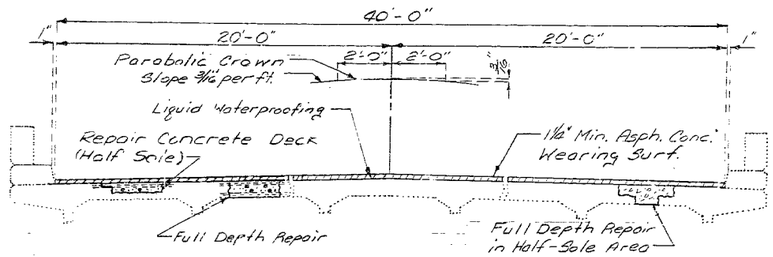

PART SECTION THRU SLAB

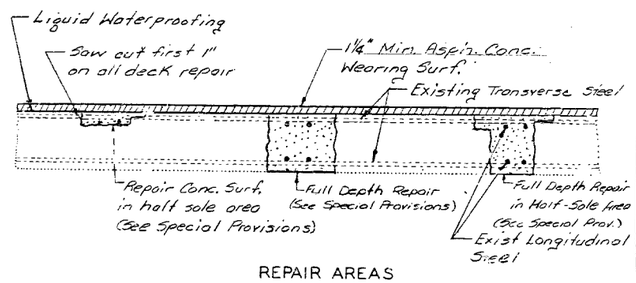

REPAIR AREAS

ESTIMATED QUANTITIES		TOTAL
Repairing Conc. Deck (Half Soling)	Sq. Ft.	20[illegible]
Full Depth Repair	Sq. Ft.	[illegible]
Bridge Deck Waterproofing (Liquid)	Sq. Yd.	19.56
Asph. Cement (Asph. Conc.) 60-70 or AC-20	Ton	[illegible]
Mineral Aggr. (Asph. Conc.) (Type A Mix)	Ton	[illegible]
Preformed Compression Expansion Jt. Seal (~~3/4~~) In	L.F.	0
Preformed Compression Expansion Jt. Seal (0 1/2) In	L.F.	90
~~SDZ.01~~ Preformed Compression Expansion Jt. Seal (2.5) In.	L.F.	40

Note: Outline of old work is indicated by light dotted lines. Heavy lines indicate new work

Sheet No. 1 of 4

BRIDGE: RT. LANE RTE. I-435 OVER
RAMPS "H" "E" & "F" RTE. I-70

JOB NO. 4-I-435-514
PROJ. NO. IR-435-1(165)
JACKSON COUNTY A-992R

94

B.M.

BRIDGE

STATE ROAD

ABOUT

PROJECT NO. IR-435-1(165) **STA.**

JOB NO. 4-I-435-514 **RTE** I-435

Jackson **COUNTY**

DATE

STD.	
STD.	
A-992R	

DESIGNED 19
DETAILED 19
CHECKED 19

Note: This drawing is not to scale. Follow dimensions.

Sheet No. A of [illegible]

MISSOURI HIGHWAY AND TRANSPORTATION COMMISSION

U.I.P. (64'-80'-105'-105'-84') CONTINUOUS CONCRETE BOX GIRDER SPANS

State	Proj. No.	Sheet No.
MO		B73
SEC/SUR 19	TWP 49N	RGE 32W

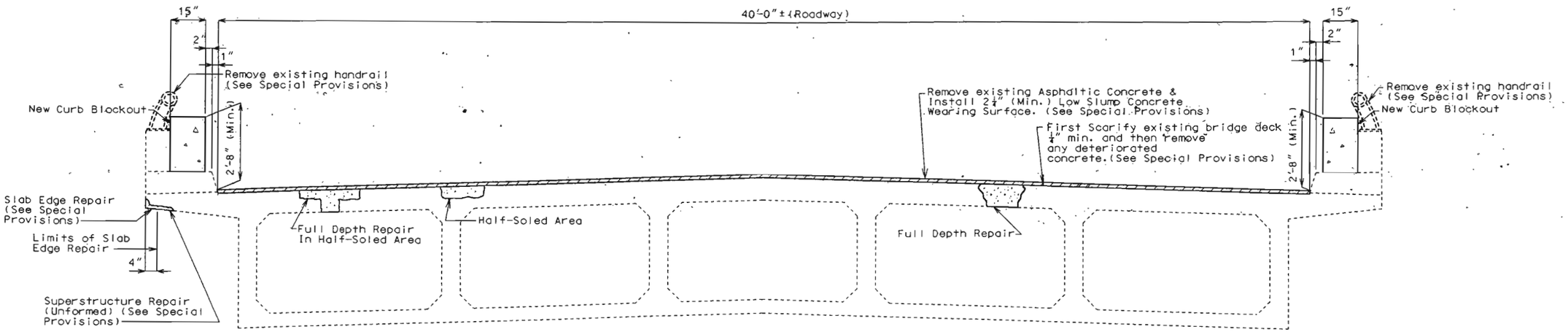

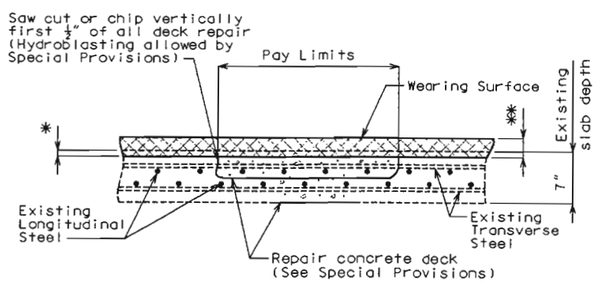

* First Scarify existing bridge deck ¼" min. and then remove any deteriorated concrete. (See Special Provisions)

** 2¼" (min.) Low Slump Concrete Wearing Surface

HALF-SOLED AREA

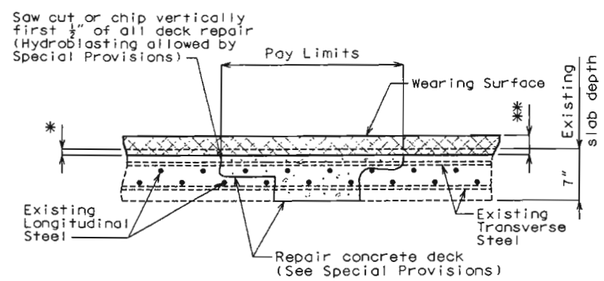

* First Scarify existing bridge deck ¼" min. and then remove any deteriorated concrete. (See Special Provisions)

** 2¼" (min.) Low Slump Concrete Wearing Surface

FULL DEPTH REPAIR IN HALF-SOLED AREA

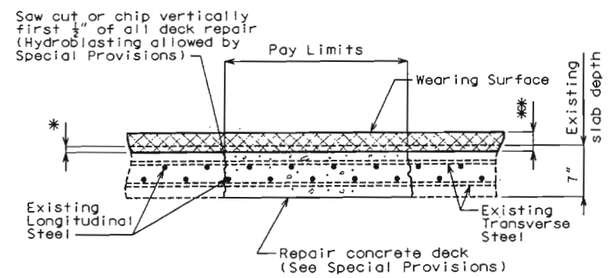

* First Scarify existing bridge deck ¼" min. and then remove any deteriorated concrete. (See Special Provisions)

** 2¼" (min.) Low Slump Concrete Wearing Surface

FULL DEPTH REPAIR

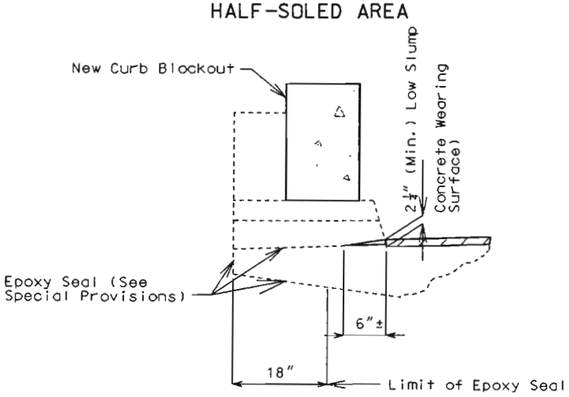

TYPICAL SECTION THRU CURB OUTLET

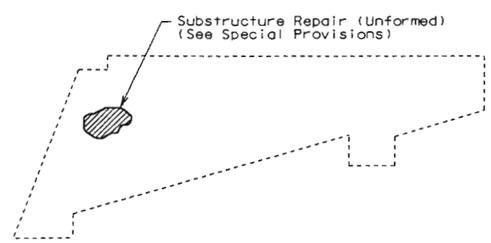

DETAIL OF END BENT WING SHOWING SUBSTRUCTURE REPAIR AT BENT NOS. 1 & 6

STATE OF MISSOURI
GREGORY E. SANDERS
NUMBER E-2000162107
DATE 8-22-02

Note: For General Notes & Quantities, see sheet no. 2.

REPAIRS TO BRIDGE OVER I-70 & RAMPS "E", "F" & "H"

STATE ROAD FROM RTE. 350 NORTH TO RTE. 40

ABOUT 0.5 MILE SOUTH OF RTE. 40

PROJECT NO. STA. 377+77.18± (match existing)

JOB NO . J4I0712 RTE. I-435 (SBL)

JACKSON COUNTY

Date: / /

STD. 609.00
STD. 706.35
A09922

REV.

Designed Mar. 2002
Detailed Mar. 2002
Checked July 2002

Note: This drawing is not to scale. Follow dimensions.

T:\br-proj\robincl\Misc-A09922\a09922_000front.dgn 10:26 AM 08/20/2002

State	Proj. No.	Sheet No.
MO		374

ESTIMATED QUANTITIES

ITEM		TOTAL
Asphalt Removal (Bridges)	sq. ft.	17,700
Replacement of Expansion Device and Adjacent Concrete	lin. ft.	80
Removal of Existing Bridge Rails	lin. ft.	918
Bridge Approach Slab (Bridge)	sq. yd.	224
Substructure Repair (Unformed)	sq. ft.	80
Superstructure Repair (Unformed)	sq. ft.	300
Protective Coating for Concrete Bents and Concrete Piers under Expansion Devices	lump sum	1
Curb Blockout	lin. ft.	951
Repairing Concrete Deck (Half-Soling)	sq. ft.	7000
Full Depth Repair	sq. ft.	1000
Slab Edge Repair (Bridges)	lin. ft.	300
Low Slump Concrete Wearing Surface	sq. yd.	1967
Strip Seal Expansion Joint System	lin. ft.	80

Notes:

Payment for the removal and replacement of any end posts shall be included in contract unit price for Curb Blockout per lin. ft.

Removal of concrete & reinforcing at End Bent Nos. 1 and 6 shall be completely covered in the contract unit price for Replacement of Expansion Device and Adjacent Concrete per lin. ft. (See Special Provisions).

All concrete & reinforcing required for replacement of backwall, curbs and parapets, necessary for placement of strip seal expansion devices at End Bent Nos. 1 and 6 shall be completely covered in the contract unit price for Replacement of Expansion Device and Adjacent Concrete per lin. ft. (See Special Provisions).

Removal of existing Bridge Approach Slabs shall be considered a Roadway Item.

General Notes:

Design Specifications:
AASHTO - 1996 and Interims thru 2000

Design Unit Stresses:
Class B-1 Concrete (Curb Blockout, Substructure Repair and Deck Repair) f'c = 4,000 psi

Reinforcing Steel (Grade 60, Epoxy Coated) fy = 60,000 psi

Joint Filler:

All joint filler shall meet the requirements of Section 1057.2.4 of the Missouri Standard Specifications, except as noted.

Reinforcing Steel:

Minimum clearance to reinforcing steel shall be 1-1/2", unless otherwise shown.

Bars bonded in old concrete not removed shall be cleanly stripped and embedded into new concrete where possible. If length is available, old bars shall extend into new concrete at least 40 diameters for smooth bars and 30 diameters for deformed bars, unless otherwise noted.

Traffic:
See roadway plans for traffic control during construction. Bridge work to be performed in 3 stages as shown on sheet no. 3.

Curb Blockouts:
Measurement of Curb Blockout is to the nearest linear foot, measured along outside of slab for left and right Curb Blockout.

For limits of Curb Blockout, see sheet nos. 9 and 10.

All exposed edges of curb blockout shall have ½" radius or ⅛" bevel unless otherwise shown.

Payment for concrete, reinforcing steel, resin anchors, and any other work incidental to the curb blockouts, complete-in-place, shall be included in the contract unit price for Curb Blockout per linear foot.

Cost of any concrete curb and parapet repair shall be considered completely covered in the contract unit price for Curb Blockout.

All reinforcement shall be epoxy coated.

Existing handrail shall be removed and will be considered the property of the contractor.

Resin Anchors:

The contractor shall use one of the resin anchor systems listed in the job special provisions. These anchor systems shall be installed according to the manufacturer's specifications, except as modified by the Job Special Provisions.

Cost of furnishing and installing the anchor system complete in place shall be included in the contract unit price for Curb Blockout.

The ⅝" diameter resin anchor systems shall have a minimum ultimate pullout strength of 15,500 lbs. in concrete with f'c = 4,000 psi. (See Special Provisions).

An epoxy coated #5 Grade 60 reinforcing bar shall be substituted for the ⅝"Ø threaded rod stud. For shape and length of reinforcing bar, see sheet nos. 8 and 13.

Miscellaneous:

Outline of old work is indicated by dashed lines. Heavy lines indicate new work.

Contractor shall verify all dimensions in field before ordering new material.

Roadway surfacing adjacent to bridge ends to match bridge overlay.

In order to maintain grade and a minimum thickness of overlay as shown on plans, it may be necessary to use additional quantities of overlay at various locations throughout the structure. No payment will be allowed for additional labor, materials or equipment for variations in thickness of overlay.

Contractor shall verify that bottom slab access doors at bottom of box girders and bottom of slab drains are in working condition and that work in this contract does not impair their function (see original plans for details). Cost shall be considered incidental to other pay items.

STATE OF MISSOURI
GREGORY E. SANDERS
NUMBER E-20001621167

DATE 8-22-02

Detailed Mar. 2002
Checked July 2002

Note: This drawing is not to scale. Follow dimensions.

JACKSON COUNTY

A09922

REV.

T:\br-proj\robinc1\Misc-A09922\a09922_000misc.dgn 9:21:05 AM 08/20/2002

State	Proj. No.	Sheet No.
MO		B75

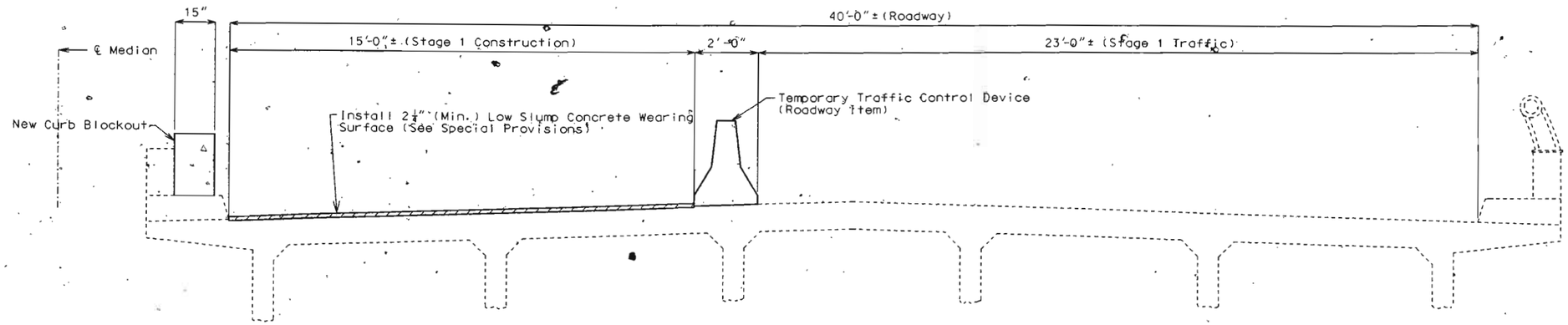

STAGE 1 CONSTRUCTION

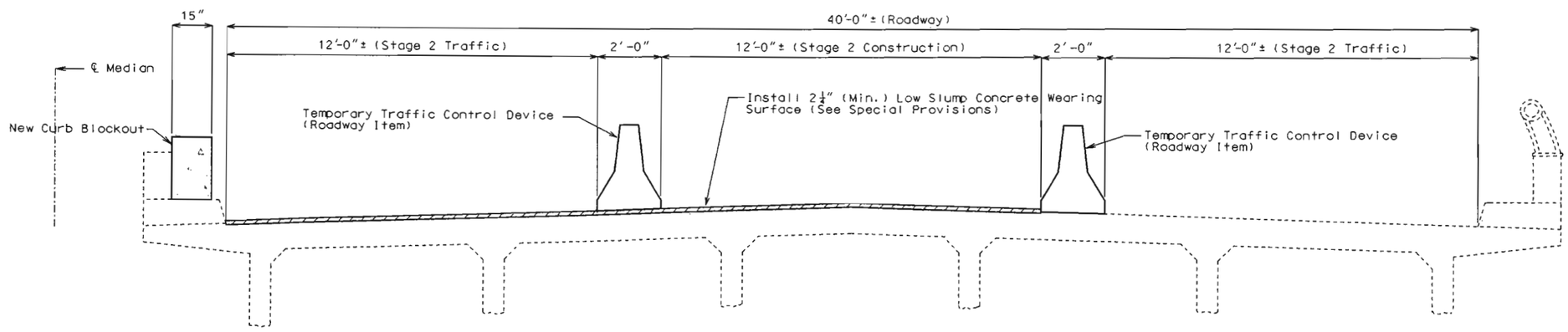

STAGE 2 CONSTRUCTION

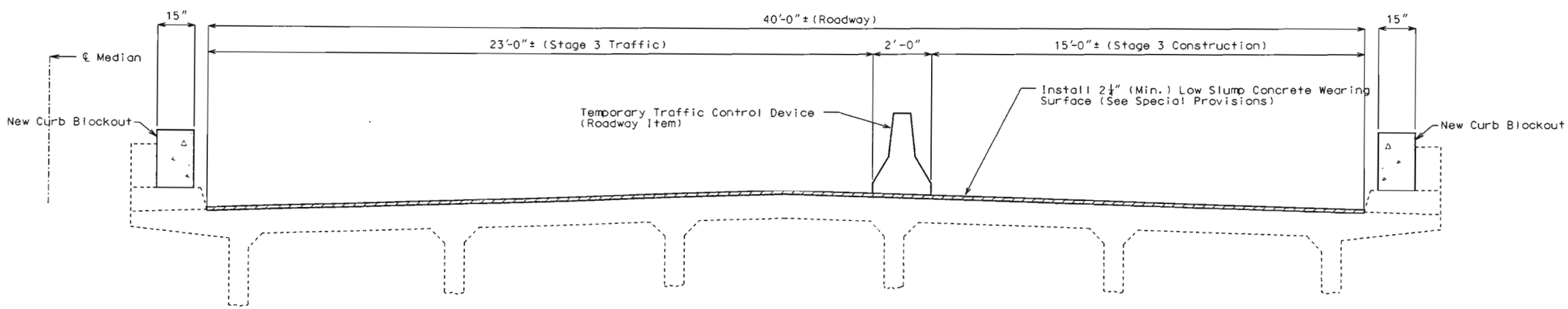

STATE OF MISSOURI
GREGORY E. SANDERS
NUMBER E-20007182167
DATE 8-22-02

STAGE 3 CONSTRUCTION

Detailed Mar. 2002
Checked July 2002

Note: This drawing is not to scale. Follow dimensions.

JACKSON COUNTY

A09922

REV.

T:\br-proj\robinc1\Misc-A09922\a09922_000stage.dgn 9:21:46 AM 08/20/2002

State	Proj. No.	Sheet No.
MO		B76

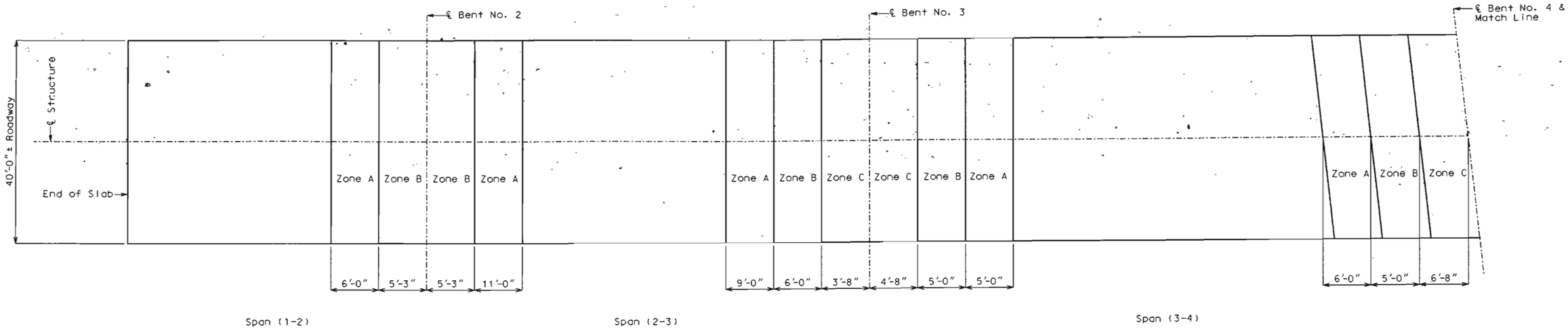

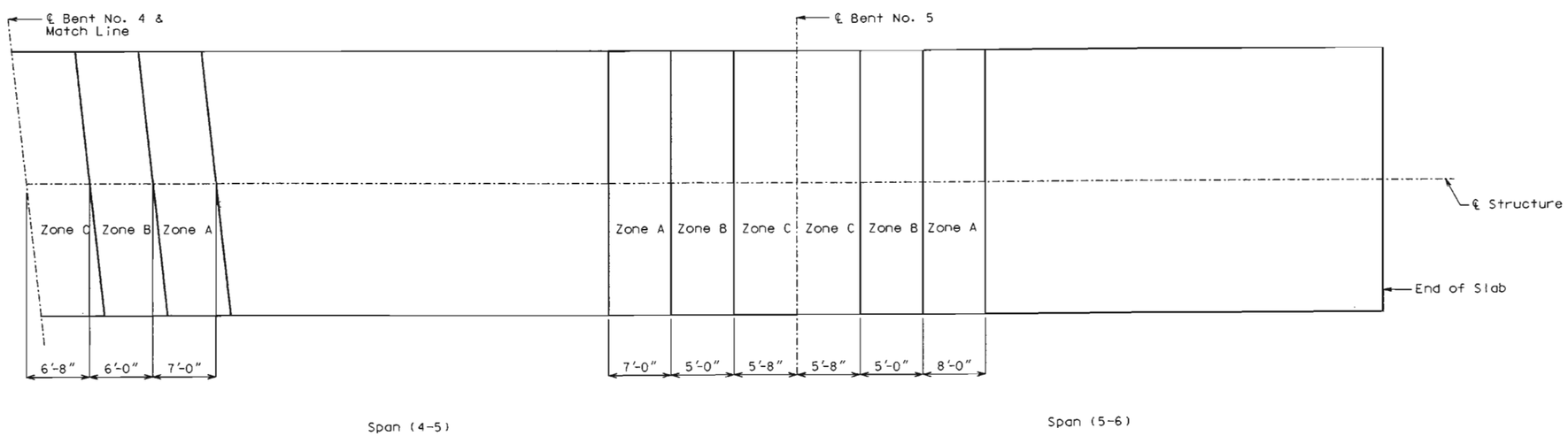

PLAN OF SLAB SHOWING SPECIAL REPAIR ZONES

Note:

Zones with the same letter designation may be repaired at the same time. Sequence of repairs follows Zone A. Zone B then Zone C.

Any repair in the remainder of the bridge that is within 42" of Zone A shall be completed before removing old concrete in Zone A.

STATE OF MISSOURI
GREGORY E. SANDERS
NUMBER E-20001602167
REGISTERED PROFESSIONAL ENGINEER

DATE 8-22-02

Detailed Mar. 2002
Checked July 2002

Note: This drawing is not to scale. Follow dimensions.

JACKSON COUNTY A09922

REV.

T:\br-proj\robinc1\Misc-A09922\a09922_000zone.dgn 09:22:11 AM 08/20/2002

State	Proj. No.	Sheet No.
MO		B77

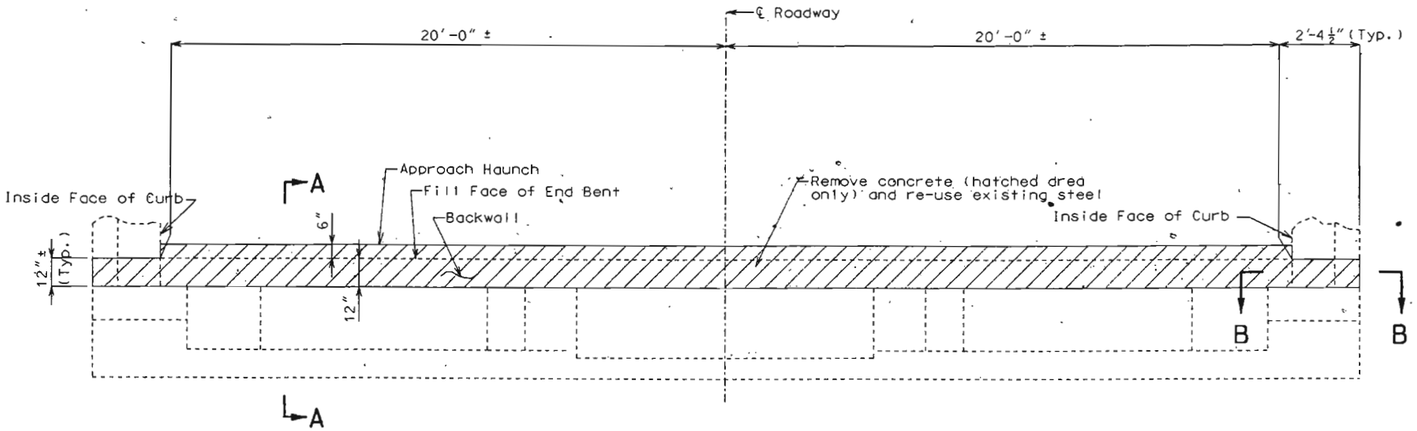

PART PLAN OF END BENT SHOWING EXISTING CONCRETE REMOVAL

(Construction staging is not shown, but shall be consistent with that shown on sheet no. 3)

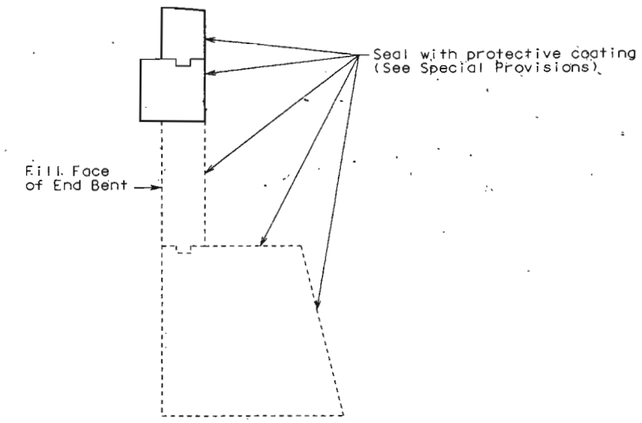

SECTION THRU END BENT
SHOWING PROTECTIVE COATING LIMITS

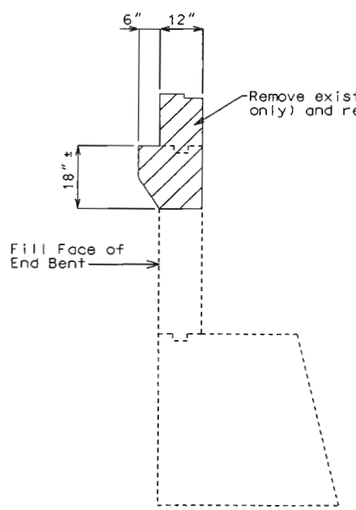

SECTION A-A
(SHOWING EXISTING CONCRETE REMOVAL)

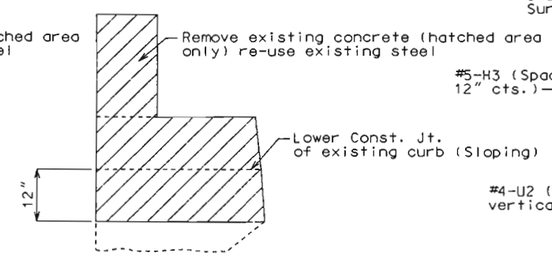

SECTION B-B
(SHOWING EXISTING CONCRETE REMOVAL)

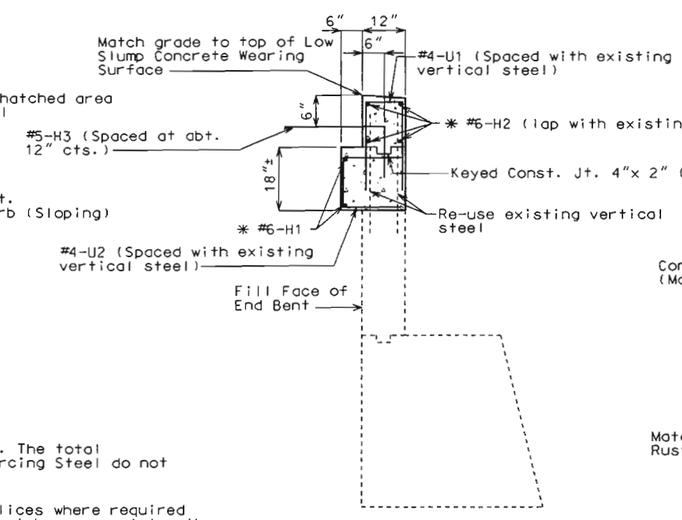

SECTION A-A
(SHOWING CONCRETE REPLACEMENT)

Note: For expansion device placement in backwall, see sheet nos. 6 & 7.

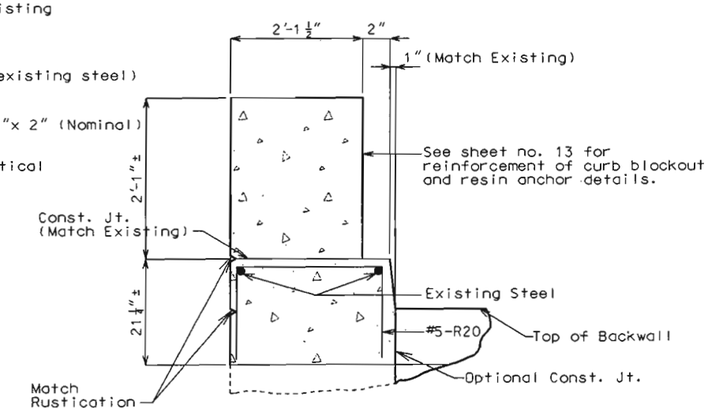

SECTION B-B
(SHOWING CONCRETE REPLACEMENT)

STATE OF MISSOURI
GREGORY E. SANDERS
NUMBER E-2001042187
REGISTERED PROFESSIONAL ENGINEER
DATE 8-22-02

* The H1 and H2 bars shall be segmented bars. The total lengths for H-bars shown in bill of Reinforcing Steel do not allow for staging.

The contractor shall use mechanical bar splices where required for placement of #6-H1 and H2 bars and actual bar segment lengths will be determined based upon manufacturers recommendations of installation and stage construction.

The cost of furnishing and installing the bar splices shall be included in the contract unit price for other items.

See Job Special Provisions for additional requirements of mechanical bar splices. Mechanical bar splices for epoxy coated bars shall be epoxy coated.

Notes: Concrete for replacement shall be Class B-1. For details of strip seal expansion device replacement, see sheet nos. 6 and 7.

Payment for removal and replacement of curb and parapets shall be completely covered in the contract unit price for Replacement of Expansion Device and Ajacent Concrete (See Special Provisions).

All new reinforcing steel shall be epoxy coated.

TYPICAL DETAILS FOR END BENT NOS. 1 & 6

Detailed Mar. 2002
Checked July 2002

Note: This drawing is not to scale. Follow dimensions.

JACKSON COUNTY A09922 REV.

T:\br-proj\robinct\Misc-A09922\a09922_000backw.dgn 09:19:50 AM 08/20/2002

State	Proj. No.	Sheet No.
MO		878

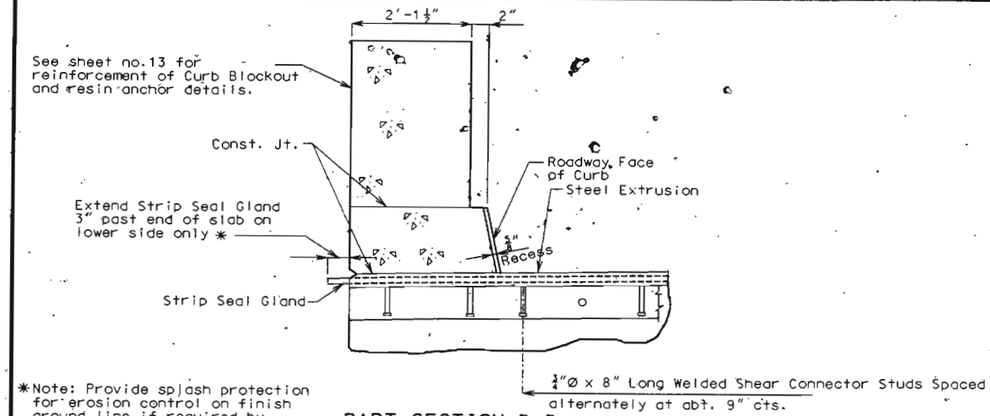

*Note: Provide splash protection for erosion control on finish ground line if required by the engineer (Roadway Item).

PART SECTION D-D

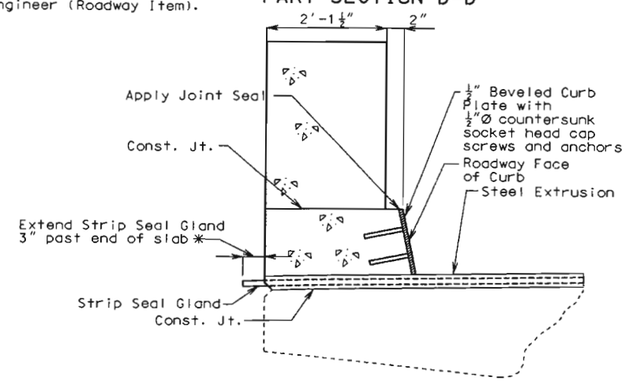

PART SECTION E-E (SHOWING CONCRETE REPLACEMENT)

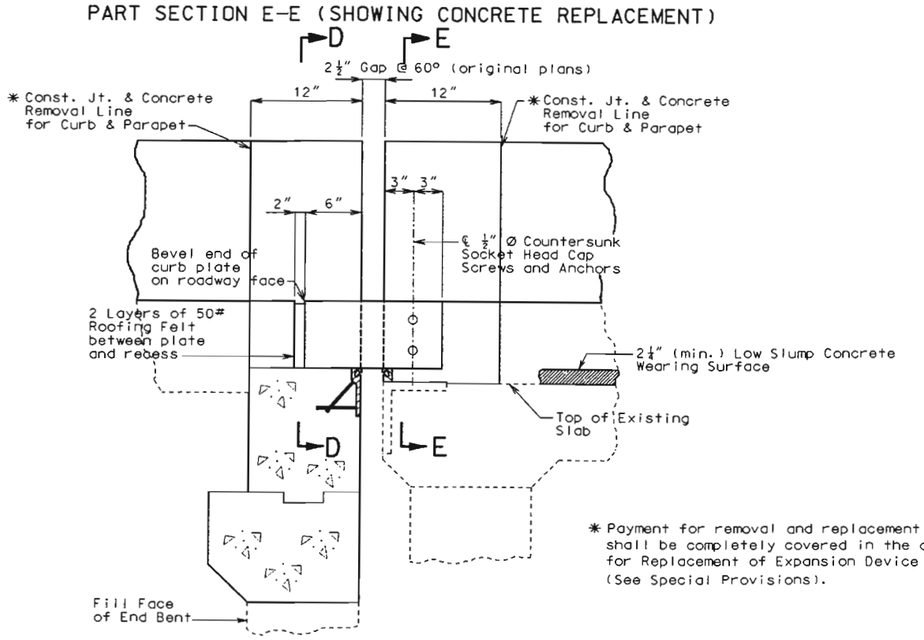

(Strip Seal Gland not shown for clarity)

PART SECTION B-B

* Payment for removal and replacement of curb and parapets shall be completely covered in the contract unit price for Replacement of Expansion Device and Adjacent Concrete (See Special Provisions).

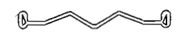

DETAIL OF GLAND

Note: Use single layer gland, no multiple layer glands allowed.

Strip seal gland size = 4"

STRIP SEAL GLAND

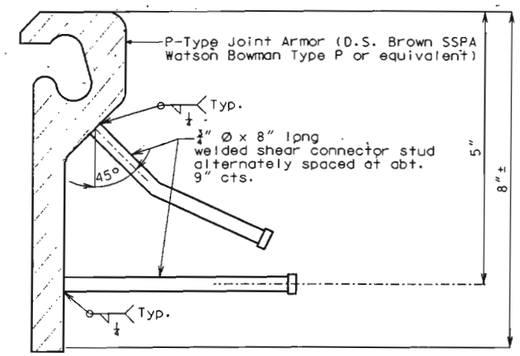

DETAIL OF STEEL EXTRUSION IN BACKWALL OF END BENT

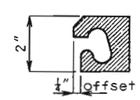

DETAIL OF STEEL EXTRUSION ON EXISTING SLAB

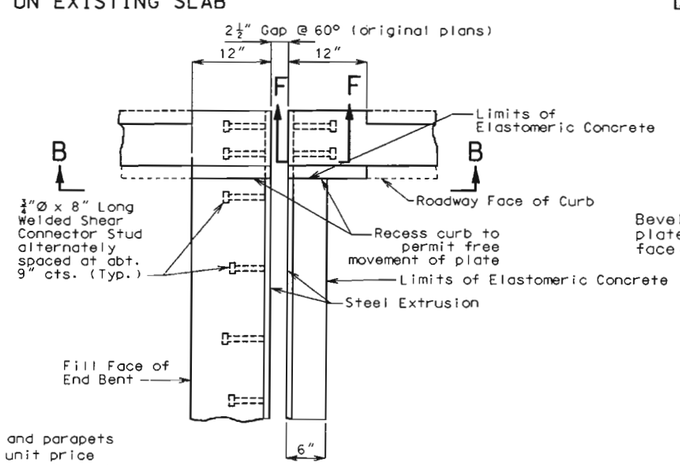

PART PLAN

NOTE:

The expansion device shall be fabricated and installed in accordance with the recommendations of the manufacturer, and as set forth in the Special Provisions.

The contractor shall verify all dimensions prior to fabrication.

Splices of steel extrusion shall develop full strength.

All steel shall be ASTM A709 Grade 36, except steel extrusions shall be ASTM A709 Grade 50W or Grade 36.

Neoprene Strip Seal shall meet ASTM D-2628.

Anchors for the extrusions or armor shall be approved welded studs (C1010 thru C1020).

All welds shall conform to Section 712 of the Missouri Standard Specifications.

Concrete shall be forced under and around strip seal extrusions and studs. Proper consolidation of the concrete shall be achieved by localized internal vibration.

Plan dimensions are based on installation at 60°F. The gap shall be increased 1/16" for each 10° fall in temperature and decreased 1/16" for each 10° rise in temperature from the installation temperature.

Longitudinal reinforcing steel shall be placed so that ends shall not be more than 1"± from vertical leg of extrusion at Expansion Device.

Structural steel for the expansion device shall be coated with a minimum of two coats of inorganic zinc primer (5 mils minimum). Anchors need not be protected from overspray.

Payment for furnishing, coating and placing steel extrusions, miscellaneous structural steel, and neoprene strip seal shall be made under the contract unit price for Strip Seal Expansion Joint System per lin. ft.

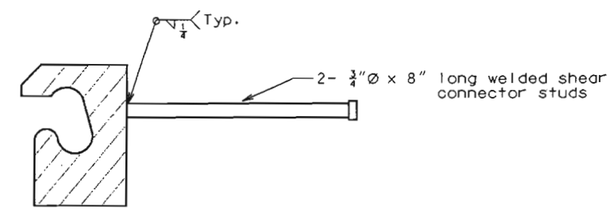

Note: Shift existing reinforcement in curb to clear studs.

PART SECTION F-F

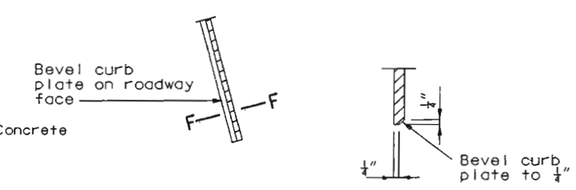

AT END OF BEVELED CURB PLATE

SECTION F-F

STATE OF MISSOURI GREGORY E. SANDERS NUMBER E-20001 REGISTERED PROFESSIONAL ENGINEER

DATE 8-22-02

DETAILS OF STRIP SEAL EXPANSION DEVICE REPLACEMENT AT END BENTS

Detailed Apr. 2002
Checked July 2002

JACKSON COUNTY

A09922

State	Proj. No.	Sheet No.
MO		B79

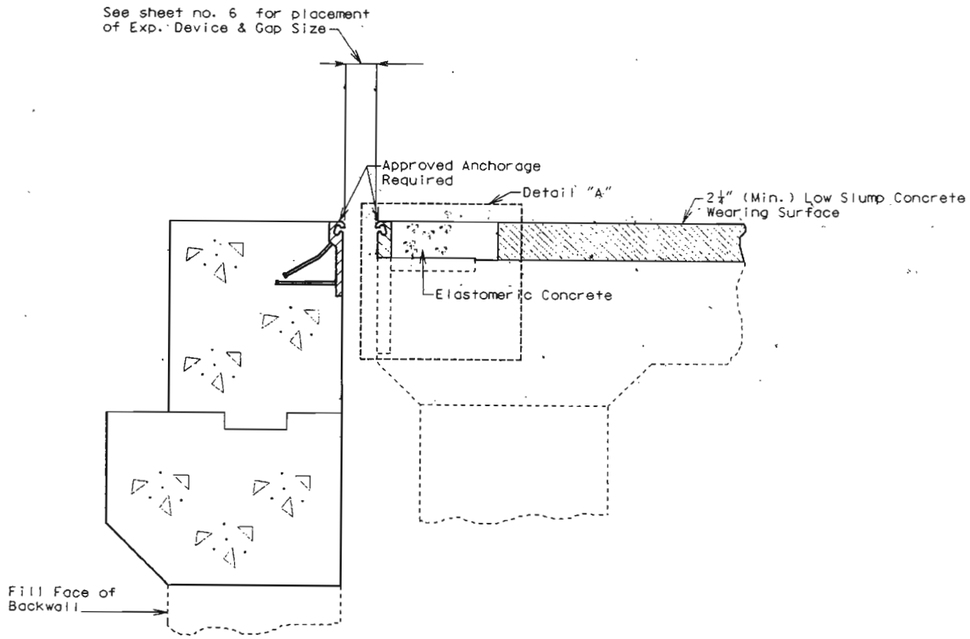

PART SECTION THRU END OF SLAB AT BENT NO. 1

Note: Bent No. 6 similar.

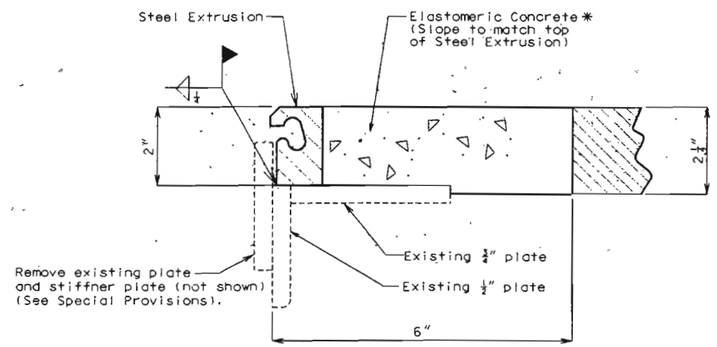

DETAIL "A"

* Submit manufacturer's specifications and installation requirements to the engineer for approval.

STATE OF MISSOURI
GREGORY E. SANDERS
NUMBER E-2000102167
DATE 8-22-02

DETAILS OF STRIP SEAL EXPANSION DEVICE AT END BENTS

Detailed Apr. 2002
Checked July 2002

Note: This drawing is not to scale. Follow dimensions.

Sheet No. 7 of 15

JACKSON COUNTY A09922

REV.

T:\br-proj\robinc1\Misc-A09922\a09902_000exp1.dgn 9:19:20 AM 08/20/2002

STATE	PROJ. NO.	SHEET NO.
MO.		880

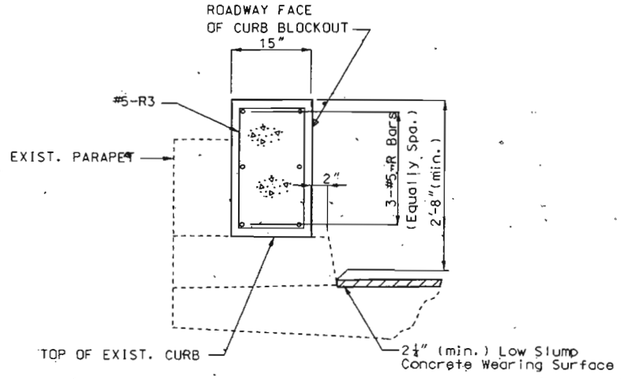

TYPICAL SECTION THRU CURB BLOCKOUT SHOWING REINFORCEMENT

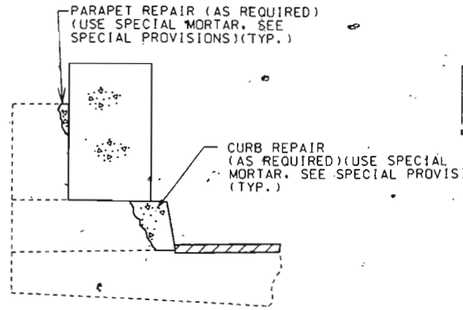

TYPICAL SECTION THRU CURB BLOCKOUT SHOWING CONCRETE CURB & PARAPET REPAIR

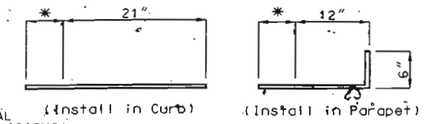

DETAILS OF RESIN ANCHORS AT 15" CURB BLOCKOUTS

* Manufacturer's embedment depth but no greater than 5" in Exist. Parapet and no greater than 7" in Exist. Curb (4" over curb outlets).

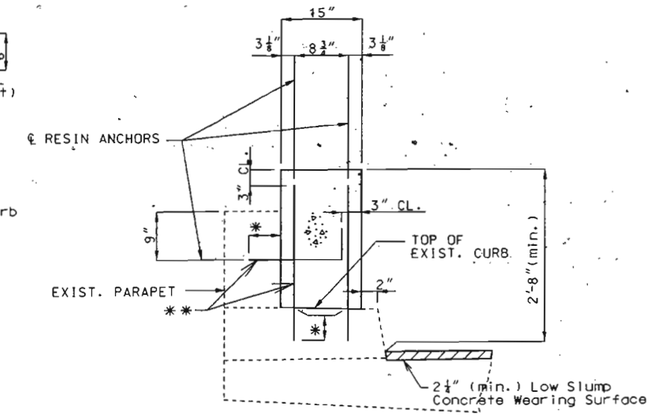

TYPICAL SECTION THRU CURB BLOCKOUT SHOWING RESIN ANCHORS

** Resin anchors spaced with alternating pattern at abt. 12" cts.

STATE OF MISSOURI
GREGORY E. SANDERS
NUMBER E-2000162167
REGISTERED PROFESSIONAL ENGINEER
DATE 8-22-02

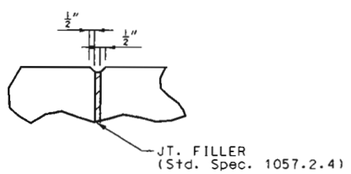

FILLED JOINT DETAIL

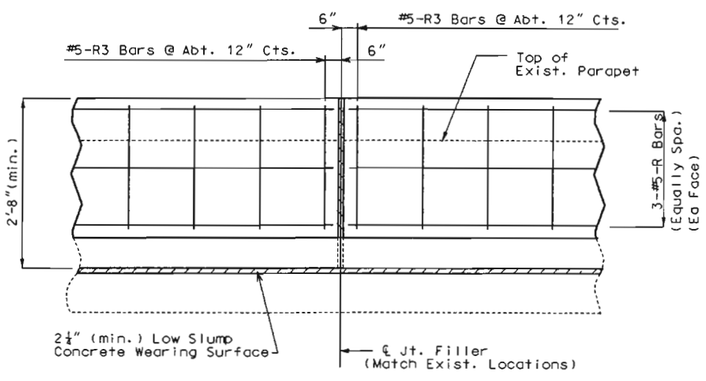

PART ELEVATION OF CURB BLOCKOUT SHOWING REINFORCEMENT

NOTES FOR CURB BLOCKOUT:

Concrete in curb blockout shall be Class B-1.

Measurement of the concrete Curb Blockout is to the nearest linear foot, measured along the inside face of existing parapet from end of wing to the end of wing.

All exposed edges of curb blockout shall have ½" radius or ⅜" bevel unless otherwise shown.

Payment for concrete, reinforcing steel, resin anchors and any other work incidental to the curb blockout complete in place shall be included in the contract unit price for Curb Blockout.

Cost of any concrete curb & parapet repair shall be considered completely covered in the contract unit price for Curb Blockout.

Use a minimum lap of 3'-0" for #5 horizontal Curb Blockout bars where necessary.

The cross-sectional area of the Curb Blockout above top of existing curb = 2.59± sq. ft.

Provide or maintain access to existing active conduit systems and junction boxes.

Shift reinforcing steel in field where necessary to clear access openings for existing active junction boxes and conduit systems.

Match locations of existing filled joints.

Longitudinal reinforcing steel shall be field cut to required length between filled joints.

All reinforcing shall be epoxy coated.

Contractor shall prevent damage to existing conduit at light support standards and elsewhere on bridge (See Special Provisions).

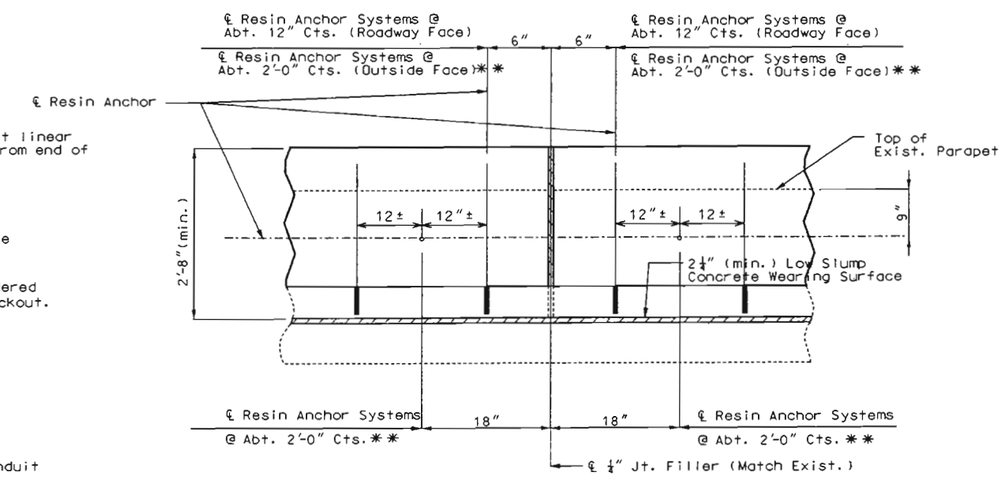

PART SECTION OF CURB BLOCKOUT SHOWING RESIN ANCHORS

DETAILED Mar. 2002
CHECKED July 2002

TYPICAL DETAILS OF CURB BLOCKOUT

NOTE: THIS DRAWING IS NOT TO SCALE. FOLLOW DIMENSIONS.

JACKSON COUNTY

A09922

STATE	PROJ. NO.	SHEET NO.
MO.		881

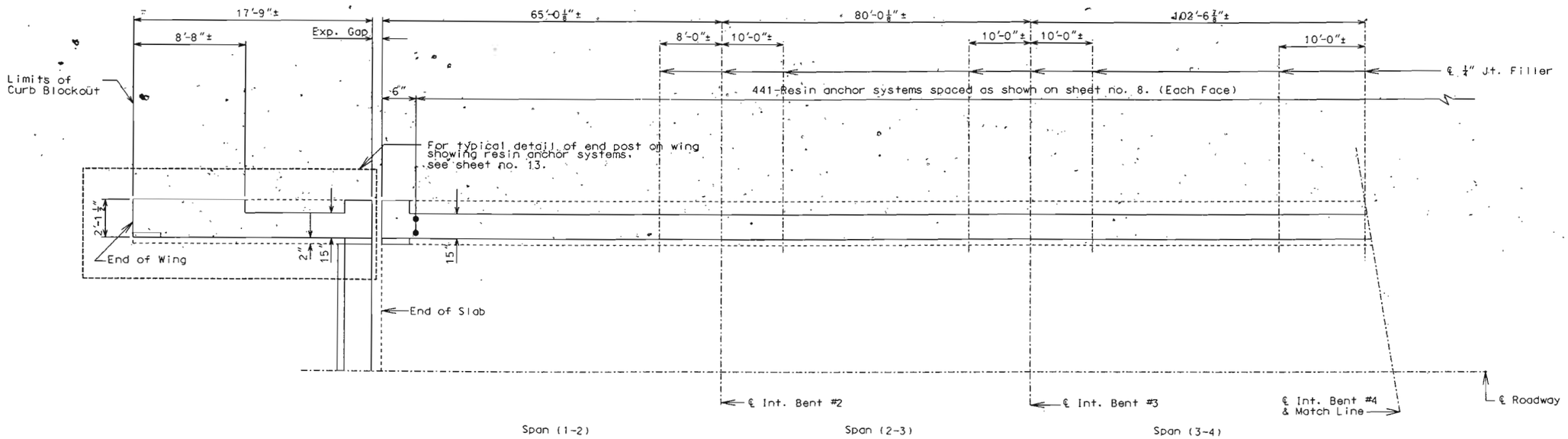

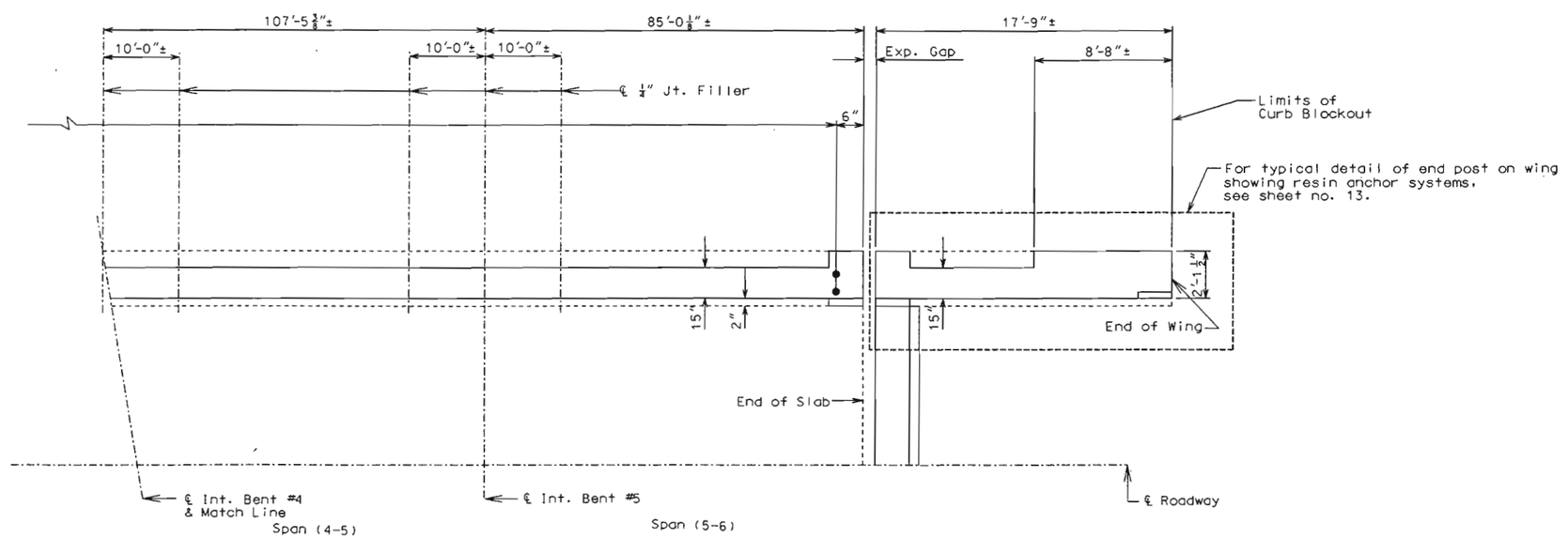

Note: Longitudinal dimensions shown are along ℄ parapet.
Match existing curb joints.
For details of resin anchor systems not shown, see sheet no. 8.

PLAN OF LEFT CURB BLOCKOUT SHOWING RESIN ANCHOR SPACING

STATE OF MISSOURI
GREGORY E. SANDERS
NUMBER E-20001620167
DATE 8-22-02

DETAILED MAR. 2002
CHECKED July 2002

NOTE: THIS DRAWING IS NOT TO SCALE. FOLLOW DIMENSIONS.

JACKSON COUNTY

A09922

STATE	PROJ. NO.	SHEET NO.
MO.		882

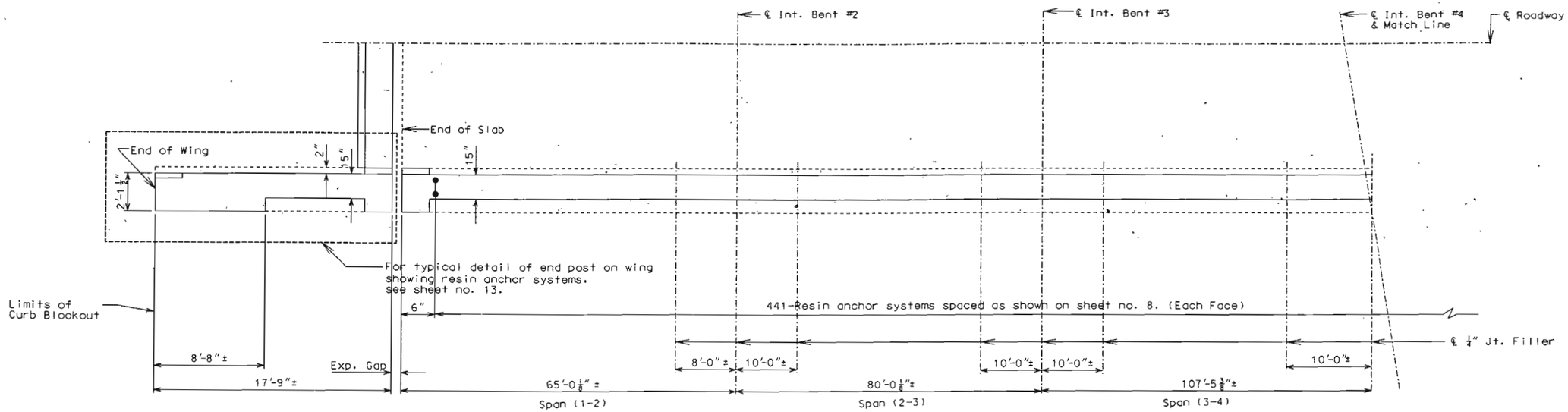

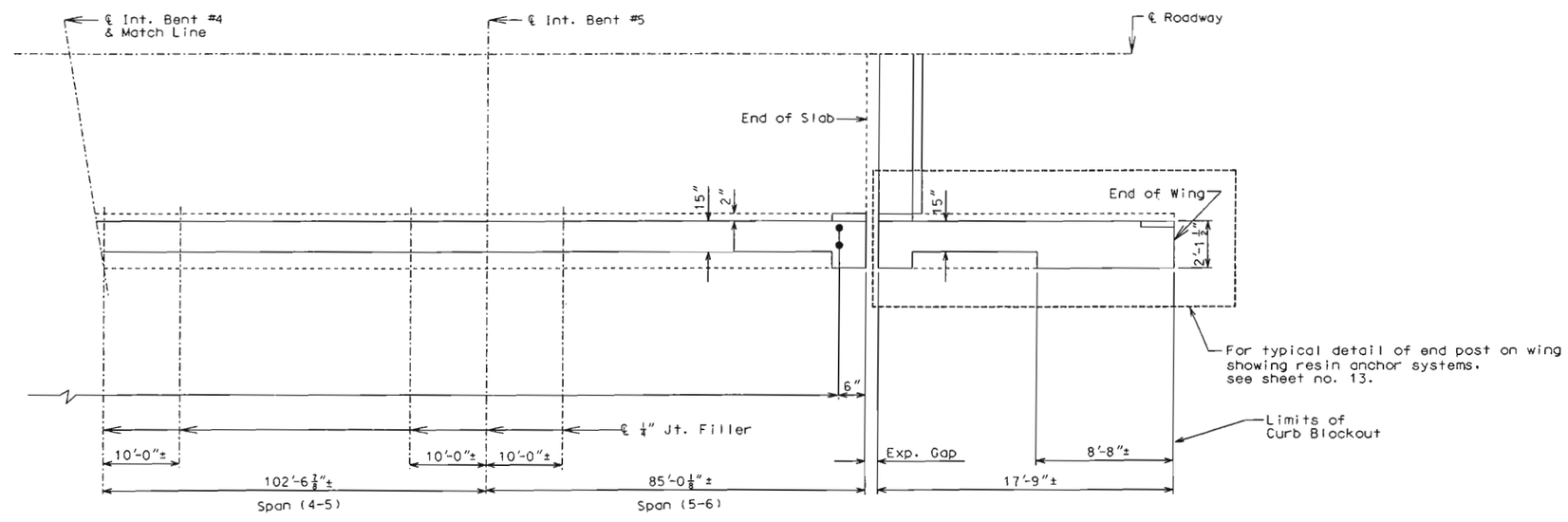

Note: Longitudinal dimensions shown are along ℄ parapet.
Match existing curb joints.
For details of resin anchor systems not shown. see sheet no. 8.

STATE OF MISSOURI
GREGORY E. SANDERS
NUMBER E-2000162167
REGISTERED PROFESSIONAL ENGINEER
DATE 8-22-02

PLAN OF RIGHT CURB BLOCKOUT SHOWING RESIN ANCHOR SPACING

DETAILED MAR. 2002
CHECKED July 2002

NOTE: THIS DRAWING IS NOT TO SCALE. FOLLOW DIMENSIONS.

JACKSON COUNTY

A09922

STATE	PROJ. NO.	SHEET NO.
MO.		883

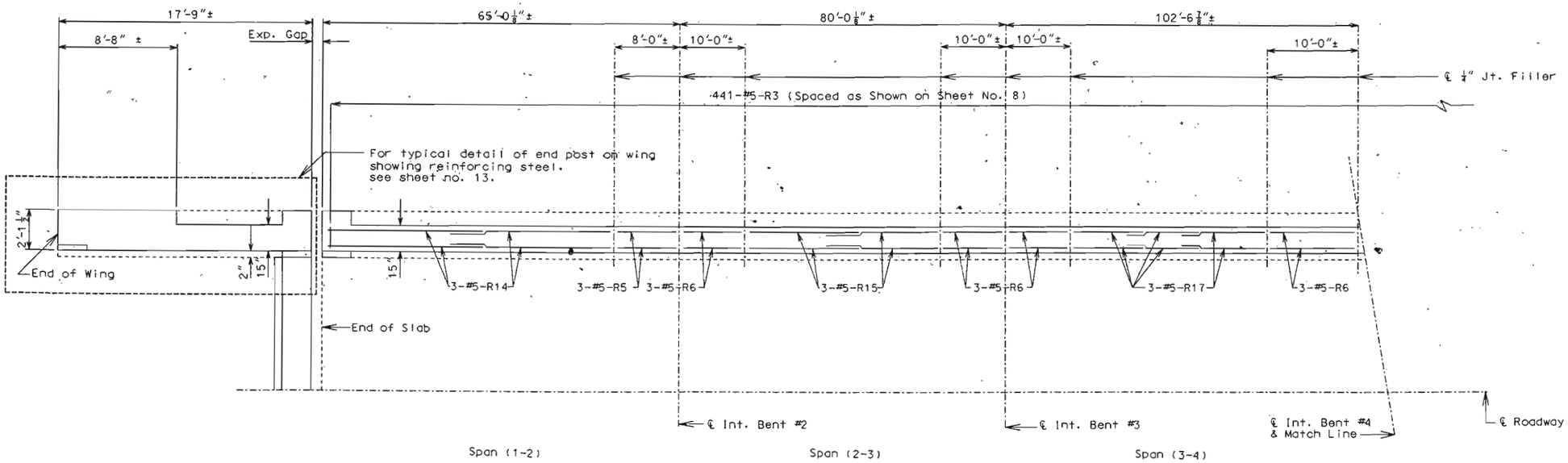

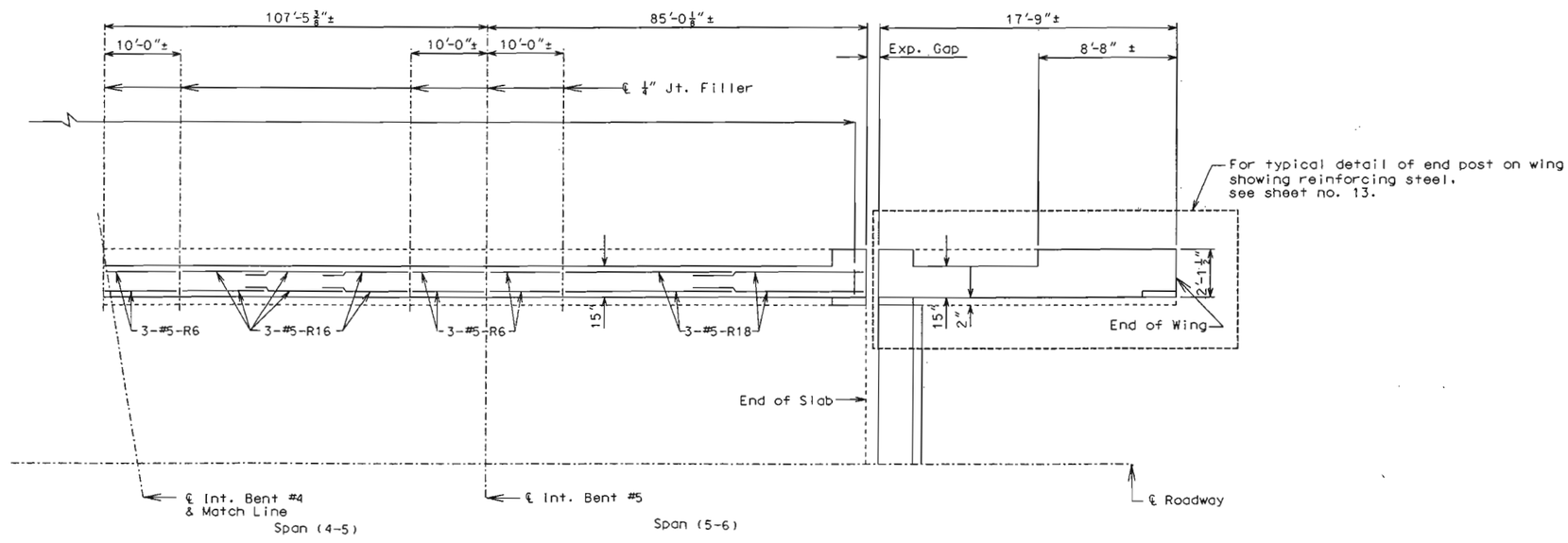

Note: Longitudinal dimensions shown are along ℄ parapet.
Match existing curb joints.
For details of reinforcing steel not shown, see sheet no. 8.
Use a minimum lap of 3'-0" for #5-R horizontal curb blockout bars.

STATE OF MISSOURI
GREGORY E. SANDERS
NUMBER E-2000162187
REGISTERED PROFESSIONAL ENGINEER
DATE 8-22-02

PLAN OF LEFT CURB BLOCKOUT SHOWING REINFORCING STEEL

DETAILED MAR. 2002
CHECKED July 2002

NOTE: THIS DRAWING IS NOT TO SCALE. FOLLOW DIMENSIONS.

JACKSON COUNTY

A09922

STATE	PROJ. NO.	SHEET NO.
MO.		8A

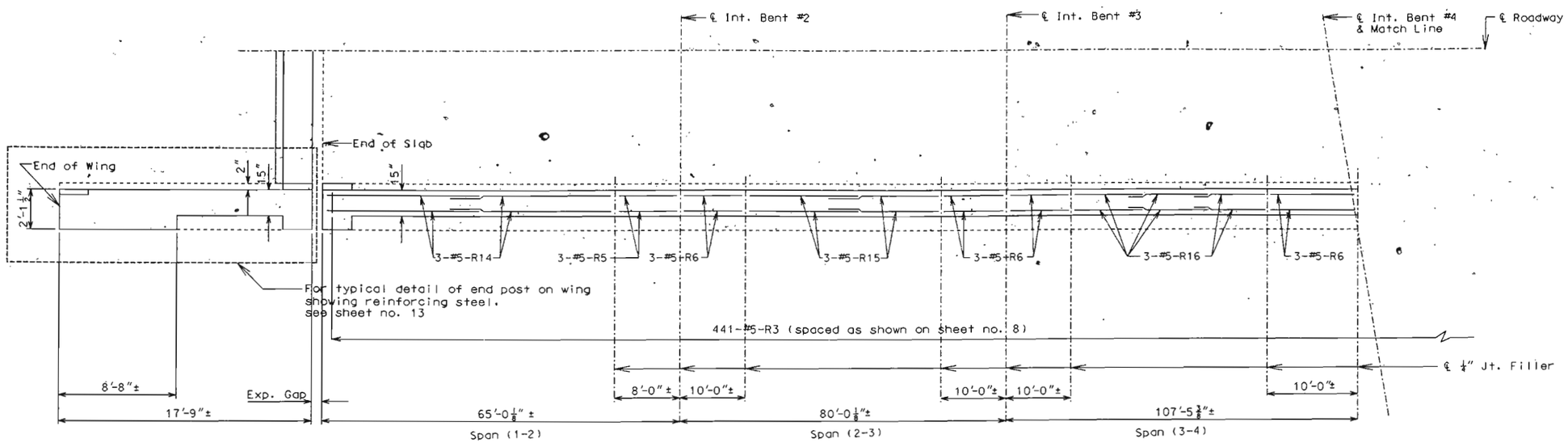

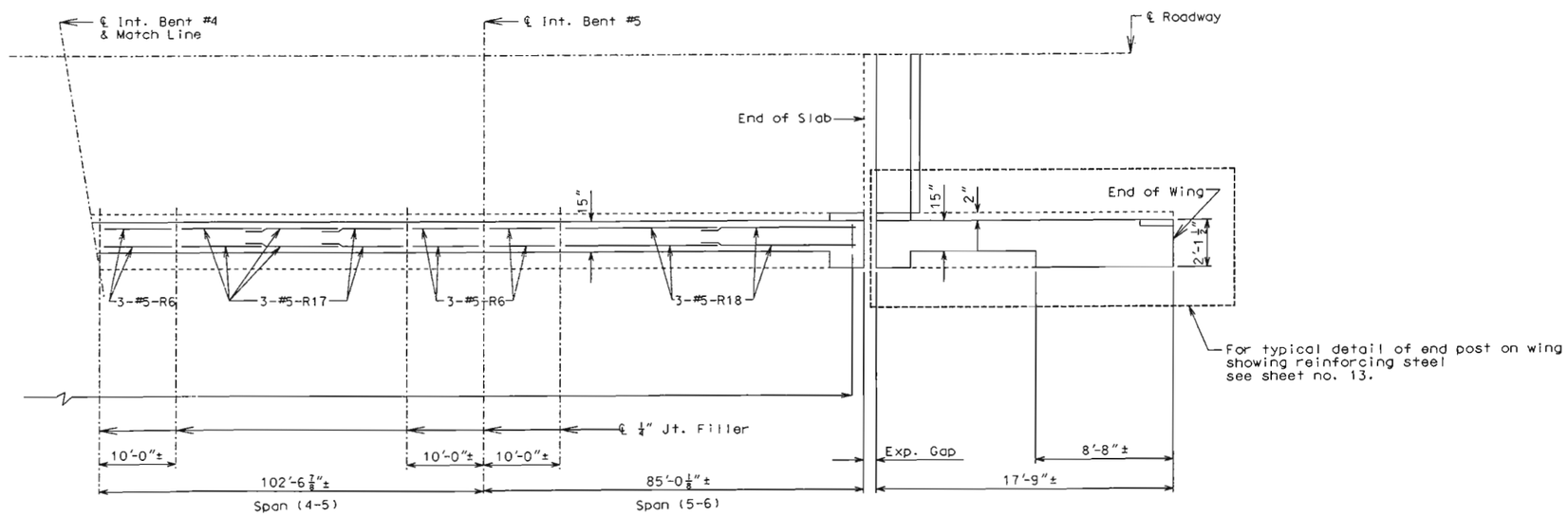

Note: Longitudinal dimensions shown are along ℄ parapet.
Match existing curb joints.
For details of reinforcing steel not shown, see sheet no. 8.
Use a minimum lap of 3'-0" for #5-R horizontal curb blockout bars.

STATE OF MISSOURI
GREGORY E. SANDERS
NUMBER E-2006142167
REGISTERED PROFESSIONAL ENGINEER

DATE 8-22-02

PLAN OF RIGHT CURB BLOCKOUT SHOWING REINFORCING STEEL

DETAILED MAR. 2002
CHECKED July 2002

NOTE: THIS DRAWING IS NOT TO SCALE. FOLLOW DIMENSIONS.

JACKSON COUNTY

A09922

STATE	PROJ. NO.	SHEET NO.
MO.		885

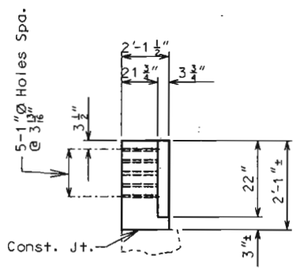

PART ELEVATION H-H

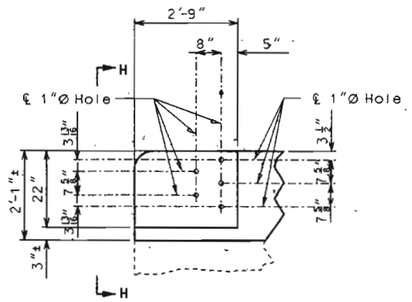

PART ELEVATION

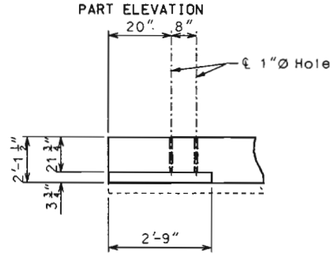

PART PLAN

DETAILS OF GUARD RAIL ATTACHMENT

(Except Bent No. 6 left wing - 1" Ø holes are not required.)

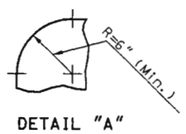

DETAIL "A"

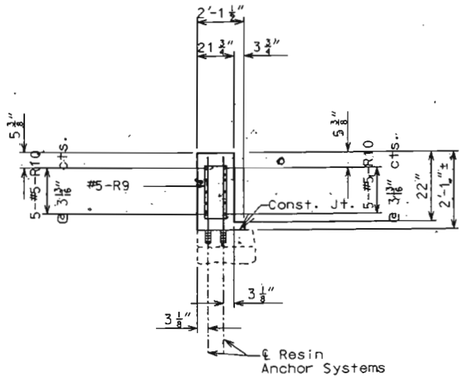

SECTION E-E

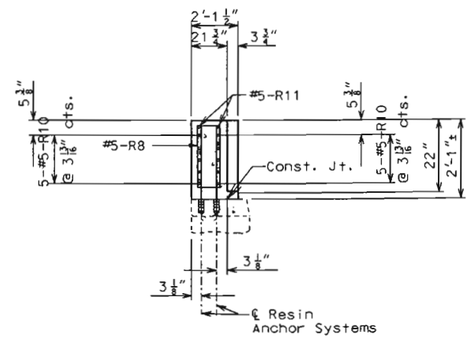

SECTION F-F

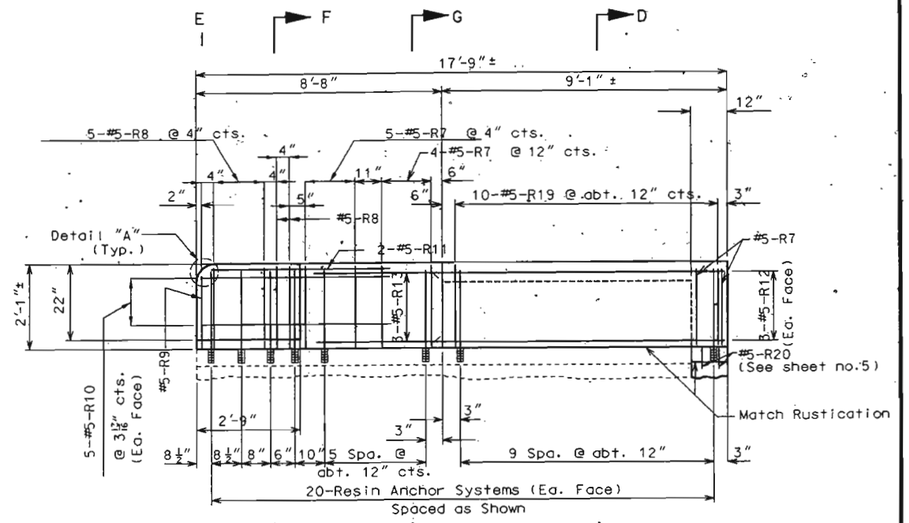

ELEVATION OF NEW END POST ON WING

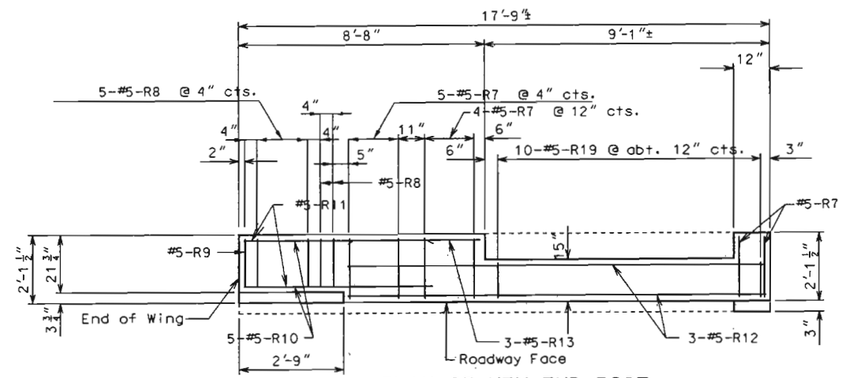

PLAN OF NEW END POST ON WING

Note: Resin anchors not shown in plan for clarity.

✱ As shown on sheet no.7 (Typ.)

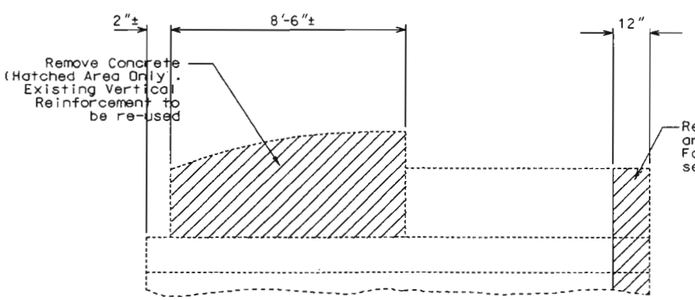

ELEVATION OF EXISTING END POST SHOWING CONCRETE REMOVAL

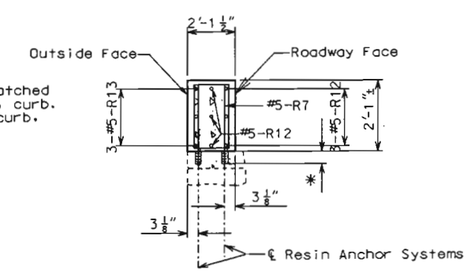

SECTION G-G

① Use alternating resin anchors in existing parapet & curb as shown on sheet no. 8.

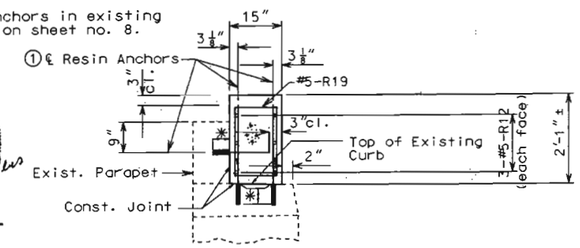

SECTION D-D

STATE OF MISSOURI
GREGORY E. SANDERS
NUMBER E-2000021877
REGISTERED PROFESSIONAL ENGINEER
DATE 8-12-02

TYPICAL DETAILS OF END POST BLOCKOUT ON WINGS

DETAILED MAR. 2002
CHECKED July 2002

NOTE: THIS DRAWING IS NOT TO SCALE. FOLLOW DIMENSIONS.

SHEET NO. 13 OF 15

JACKSON COUNTY

A09922

State	Proj. No.	Sheet No.
MO		866

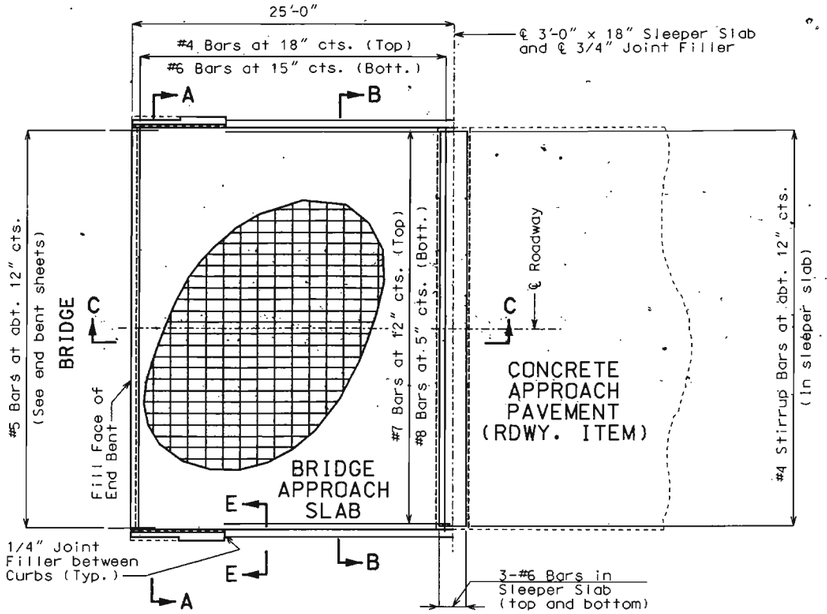

PART PLAN SHOWING REINFORCEMENT

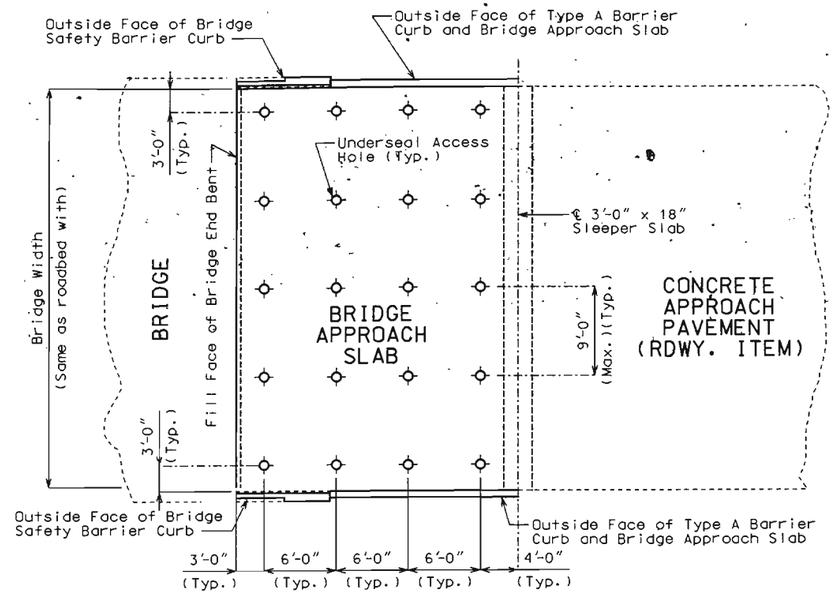

PART PLAN
(SHOWING TYPICAL UNDERSEAL ACCESS HOLE LOCATIONS)

GENERAL NOTES:

All concrete for the bridge approach slab and sleeper slab shall be in accordance with Section 503 (f'c = 4,000 psi) of the Missouri Standard Specifications.

All joint filler shall meet the requirements of Section 1057.2.5 of the Missouri Standard Specifications, except as noted.

The reinforcing steel in the bridge approach slab and the sleeper slab shall be epoxy coated Grade 60 with Fy = 60,000 psi.

Minimum clearance to reinforcing steel shall be 1-1/2", unless otherwise shown.

The reinforcing steel in the bridge approach slab and the sleeper slab shall be continuous. The transverse reinforcing steel may be made continuous by lap splicing the #4 & #6 bars 18" and 26" respectively.

Mechanical bar splices will be permitted and shall develop at least 125 percent of the specified yield strength of the reinforcing bars being spliced. The contractor shall furnish the Engineer the manufacturer's certification that this requirement is met and is required to follow the manufacturer's recommendation for installation.

Mechanical bar splices shall be epoxy coated in accordance with Section 710 of the Missouri Standard Specifications.

Hooks and bends shall be in accordance with the CRSI Manual of Standard Practice for Detailing Reinforced Concrete Structures, Stirrup and Tie Dimensions.

The contractor shall pour and satisfactorily finish the bridge slab before pouring the bridge approach slabs.

Longitudinal construction joints in approach slab and sleeper slab shall be aligned with longitudinal construction joints in bridge slab.

Payment for furnishing all materials, labor and excavation necessary to construct the approach slab, including the timber header, sleeper slab, underdrain, Type 5 aggregate base and all other appurtenances and incidental work as shown on this sheet, complete in place, shall be considered as completely covered under the contract unit price for Bridge Approach Slab (Bridge), per sq. yd.

For Concrete Approach Pavement details, see roadway plans.

See Missouri Standard Plans Drawing 609.00 for details of Type A Barrier Curb.

When a lap splice is required for the use of a mechanical bar splice, the minimum lap length shall be 40" for transverse approach slab bar splices.

At the contractor's option, Grade 40 reinforcement may be substituted for the Grade 60 #5 dowel bars connecting the bridge approach slab to the bridge abutment. No additional payment will be made for this substitution.

When Grade 40 reinforcement is substituted for the Grade 60 #5 dowel bars connecting the bridge approach slab to the bridge abutment, the reinforcement may be bent up to 90 degrees with a 2" minimum radius near the abutment to allow compaction of the backfill material near the abutment. Damage to epoxy coating shall be repaired according to Section 710.3.3 of the Missouri Standard Specifications.

Drain pipe may be either 6" diameter corrugated metallic-coated pipe underdrain, 4" diameter corrugated polyvinyl chloride (PVC) drain pipe, or 4" diameter corrugated polyethylene (PE) drain pipe.

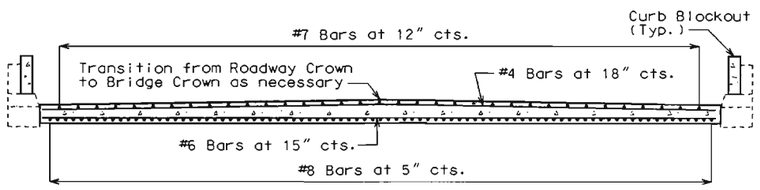

SECTION A-A

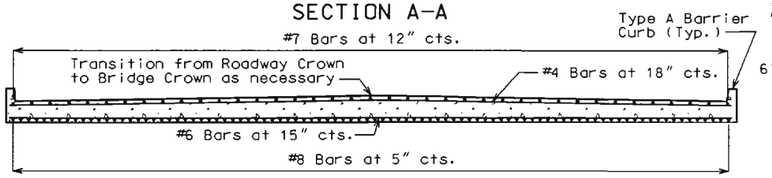

SECTION B-B

Note: With the approval of the Engineer, the contractor may crown the bottom of the approach slab to match the crown of the roadway surface.

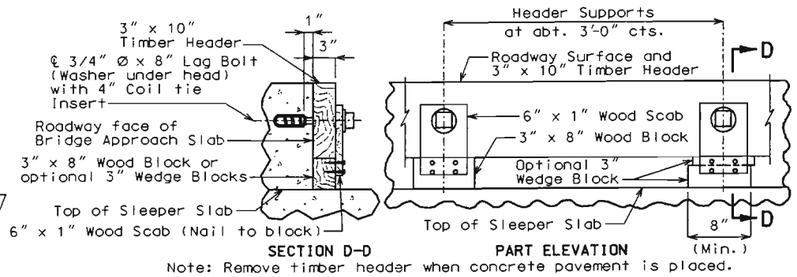

SECTION D-D PART ELEVATION

Note: Remove timber header when concrete pavement is placed.

DETAILS OF TIMBER HEADER

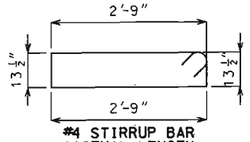

#4 STIRRUP BAR (ACTUAL LENGTH = 8'-3")

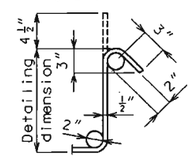

TYPICAL 135° STIRRUP HOOK DIMENSIONS BENDING DIAGRAM

Note: Nominal lengths are based on out to out dimensions shown in bending diagram and are listed for fabricators use (nearest inch).

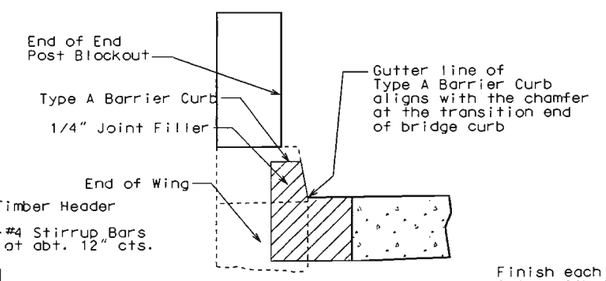

SECTION E-E
(BETWEEN CURBS)

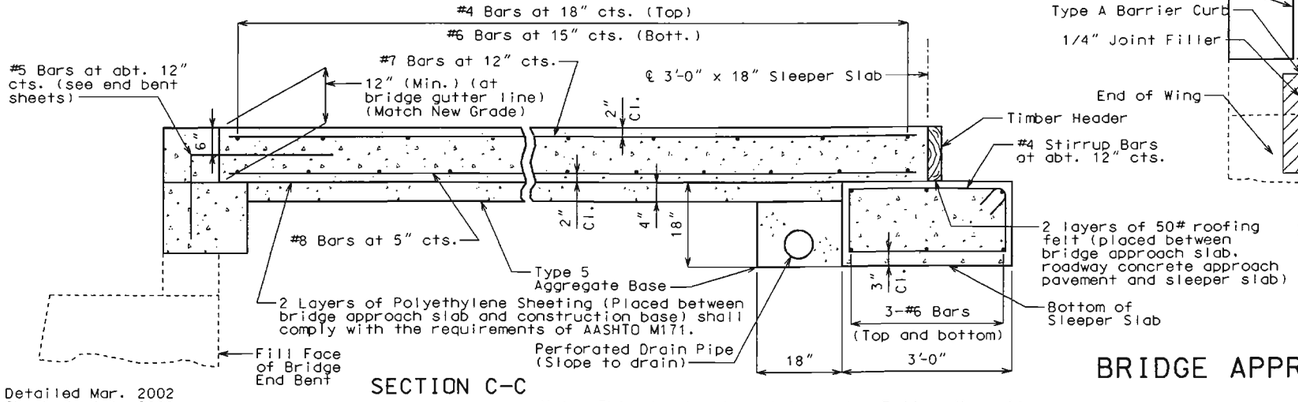

SECTION C-C

BRIDGE APPROACH SLAB

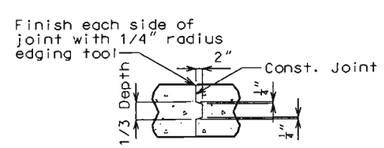

CONST. JOINT DETAIL
(IF REQUIRED)

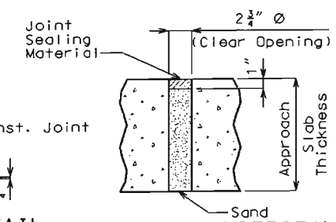

TYPICAL UNDERSEAL ACCESS HOLE DETAIL

STATE OF MISSOURI GREGORY E. SANDERS NUMBER E-20001621 REGISTERED PROFESSIONAL ENGINEER

DATE 8-22-02

Detailed Mar. 2002
Checked July 2002

Note: This drawing is not to scale. Follow dimensions.

Sheet No. 14 of 15

JACKSON COUNTY A09922

BILL OF REINFORCING STEEL

NO. REQ'D.	MARK NO. SIZE MARK	LOCATION	EPOXY (E)	SHAPE NO.	STIRRUP (S)	SUBSTR. (X)	VARIES (V)	NO. EACH	B FT. IN.	C FT. IN.	D FT. IN.	E FT. IN.	F FT. IN.	H FT. IN.	K FT. IN.	NOMINAL LENGTH FT. IN.	ACTUAL LENGTH FT. IN.	WEIGHT LBS.
		SUPERSTR.																
		END BT. 1&6																
* 6	6 H1	BACKWALL	E	20					39 9.000							39 9	39 9	358
8	6 H2	BACKWALL	E	20					39 9.000							39 9	39 9	478
80	5 H3	BACKWALL	E	19					21.000	18.000						3 3	3 2	264
56	4 U1	BACKWALL	E	10	S					18.000	9.000					3 9	3 7	134
54	4 U2	BACKWALL	E	10	S					13.000	15.000					3 5	3 3	117
882	5 R3	BARRIER CURB	E	13	S				12.000	19.750	12.000	19.750				6 3	5 11	5443
12	5 R5	BARRIER CURB	E	20					7 9.000							7 9	7 9	97
84	5 R6	BARRIER CURB	E	20					9 9.000							9 9	9 9	854
44	5 R7	BARRIER CURB	E	13	S				22.500	22.000	22.500	22.000				8 4	8 0	367
28	5 R8	BARRIER CURB	E	13	S				18.750	22.000	18.750	22.000				7 9	7 5	217
4	5 R9	BARRIER CURB	E	13	S				18.750	17.000	18.750	17.000				6 11	6 7	27
40	5 R10	BARRIER CURB	E	20					6 0.000							6 0	6 0	250
8	5 R11	BARRIER CURB	E	20					5 9.000							5 9	5 9	48
* 26	5 R12	BARRIER CURB	E	20					14 9.000							14 9	14 9	400
12	5 R13	BARRIER CURB	E	20					8 5.000							8 5	8 5	105
24	5 R14	BARRIER CURB	E	20					29 11.000							29 11	29 11	749
24	5 R15	BARRIER CURB	E	20					31 5.000							31 5	31 5	786
36	5 R16	BARRIER CURB	E	20					31 1.000							31 1	31 1	1167
36	5 R17	BARRIER CURB	E	20					29 5.000							29 5	29 5	1105
24	5 R18	BARRIER CURB	E	20					38 10.000							38 10	38 10	972
40	5 R19	BARRIER CURB	E	13	S				12.000	20.500	12.000	20.500				6 4	6 0	250
8	5 R20	BARRIER CURB	E	10						18.000	2 1.500					5 2	4 11	41
		TOTALS																
	4		E															251
	5		E															13142
	6		E															836
		TOTAL																0
		TOTAL	E															14229
		Slab on Girder																
	4		E															251
	5		E															264
	6		E															836
		TOTAL																1351
		Safety Barrier Curb																
	5		E															12878
		TOTAL																12878

BILL OF REINFORCING STEEL

NO. REQ'D.	MARK NO. SIZE MARK	LOCATION	EPOXY (E)	SHAPE NO.	STIRRUP (S)	SUBSTR. (X)	VARIES (V)	NO. EACH	B FT. IN.	C FT. IN.	D FT. IN.	E FT. IN.	F FT. IN.	H FT. IN.	K FT. IN.	NOMINAL LENGTH FT. IN.	ACTUAL LENGTH FT. IN.	WEIGHT LBS.

State	Proj. No.	Sheet No.
MO		887

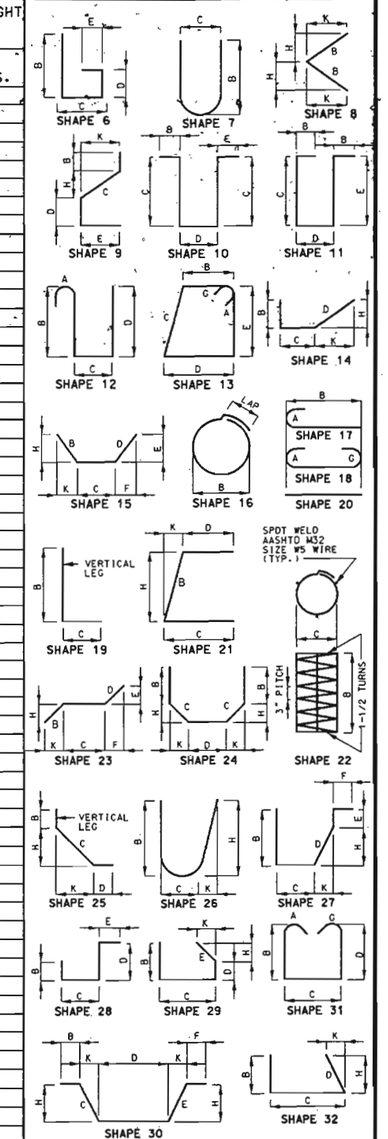

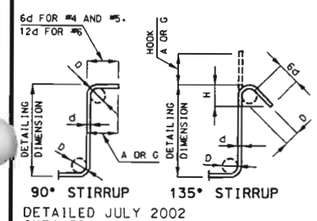

DETAILED JULY 2002
CHECKED JULY 2002

STIRRUP HOOK DIMENSIONS				
GRADES 40 - 50 - 60 KSI				
BAR SIZE	D (IN.)	90° HOOK	135° HOOK	
		HOOK A OR G	HOOK A OR G	APPROX. H
#4	2"	4-1/2"	4-1/2"	3"
#5	2-1/2"	6"	5-1/2"	3-3/4"
#6	4-1/2"	12"	8"	4-1/2"

NOTE: UNLESS OTHERWISE NOTED DIAMETER "D" IS THE SAME FOR ALL BENDS AND HOOKS ON A BAR.

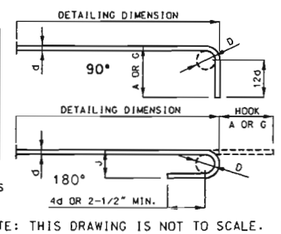

END HOOK DIMENSIONS				
BAR SIZE	D (IN.)	ALL GRADES		
		180° HOOKS		90° HOOKS
		A OR G	J	A OR G
#3	2-1/4"	5"	3"	6"
#4	3"	6"	4"	8"
#5	3-3/4"	7"	5"	10"
#6	4-1/2"	8"	6"	12"
#7	5-1/4"	10"	7"	14"
#8	6"	11"	8"	16"
#9	9-1/2"	15"	11-3/4"	19"
#10	10-3/4"	17"	13-1/4"	22"
#11	12"	19"	14-3/4"	2'-0"
#14	18-1/4"	2'-3"	21-3/4"	2'-7"

* TWO ADDITIONAL #6H1 & #5R12 ARE INCLUDED IN THE BAR BILL FOR TESTING.

NOTE:
ALL STANDARD HOOKS AND BENDS OTHER THAN 180 DEG. TO BE BENT WITH THE SAME PROCEDURE AS FOR 90 DEG. STD. HOOKS.
HOOKS AND BENDS SHALL BE IN ACCORDANCE WITH THE PROCEDURES AS SHOWN ON THIS SHEET.
E = EPOXY COATED REINFORCEMENT.
S = STIRRUP.
X = BAR IS INCLUDED IN SUBSTRUCTURE QUANTITIES.
V = BAR DIMENSIONS VARY IN EQUAL INCREMENTS BETWEEN DIMENSIONS SHOWN ON THIS LINE AND THE FOLLOWING LINE.
NO. EA. = NUMBER OF BARS OF EACH LENGTH.
NOMINAL LENGTHS ARE BASED ON OUT TO OUT DIMENSIONS SHOWN IN BENDING DIAGRAMS AND ARE LISTED FOR FABRICATOR'S USE (NEAREST INCH).
ACTUAL LENGTHS ARE MEASURED ALONG CENTERLINE BAR TO THE NEAREST INCH.
PAYWEIGHTS ARE BASED ON ACTUAL LENGTHS.
FOUR ANGLE OR CHANNEL SPACERS ARE REQUIRED FOR EACH COLUMN SPIRAL. SPACERS ARE TO BE PLACED ON INSIDE OF SPIRALS. LENGTH AND WEIGHT OF COLUMN SPIRALS DO NOT INCLUDE SPLICES OR SPACERS.
REINFORCING STEEL (GRADE 60) = FY 60,000 PSI.

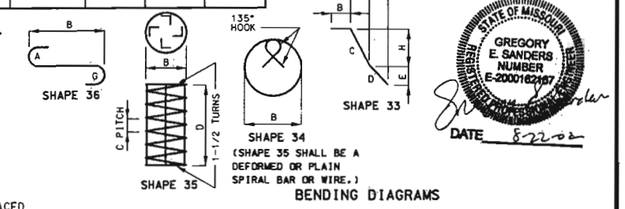

BENDING DIAGRAMS

STATE OF MISSOURI
GREGORY E. SANDERS
NUMBER E-2000162487
DATE 8-22-02

NOTE: THIS DRAWING IS NOT TO SCALE. FOLLOW DIMENSIONS.

SHEET NO. 15 OF 15

JACKSON COUNTY

A09922

MISSOURI HIGHWAY AND TRANSPORTATION COMMISSION

U.I.P. (64'-80'-105'-105'-84') CONTINUOUS CONCRETE BOX GIRDER SPANS

State	Proj. No.	Sheet No.
MO	J4I0712	B34
021115-407	I-435-1(277)	
SEC/SUR 19 TWP 49N RGE 32W		

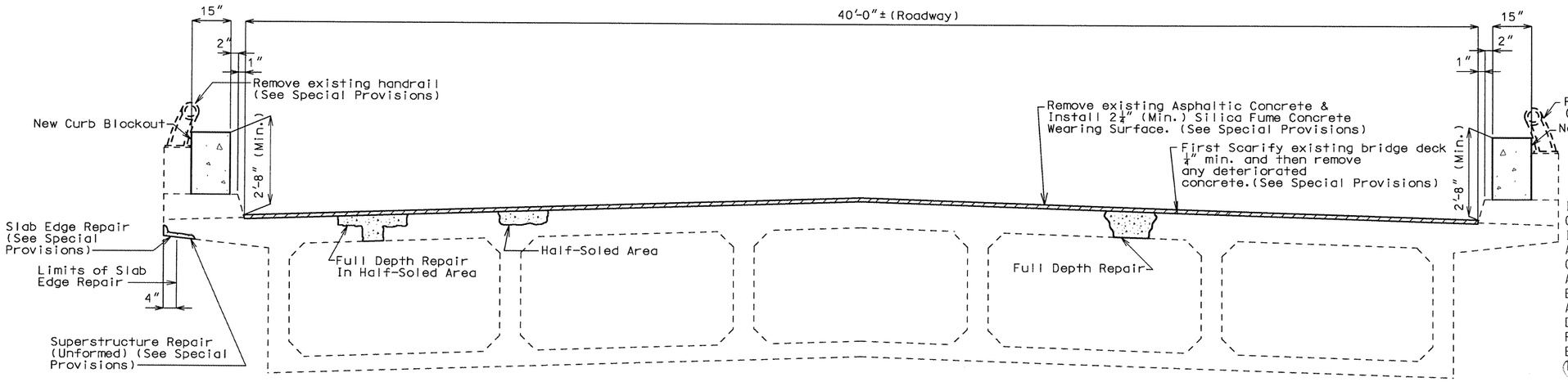

FINAL PLANS

I CERTIFY THAT THIS PLAN SHEET ACCURATELY DEPICTS THE CONFIGURATION AND LOCATION OF THE ROADWAY AND ALL ITS APPURTENANT FEATURES, TO THE BEST OF MY KNOWLEDGE, AS I AND MY STAFF HAVE OBSERVED THE CONTRACTOR'S CONSTRUCTION OF THIS PROJECT. I SPECIFICALLY DISCLAIM ANY RESPONSIBILITY FOR THE DESIGN OF THIS PROJECT, EXCEPT AS I AND MY STAFF MAY HAVE MODIFIED OR AUTHORIZED THE MODIFICATION OF THE PROJECT DESIGN DURING ITS CONSTRUCTION; AND I DISCLAIM RESPONSIBILITY FOR THE CONTRACTOR'S ACTUAL CONSTRUCTION OF THE PROJECT, EXCEPT AS I AND MY STAFF MAY HAVE DIRECTED OR ORDERED THAT THE PROJECT BE CONSTRUCTED.

SIGNATURE 4-25-05 DATE

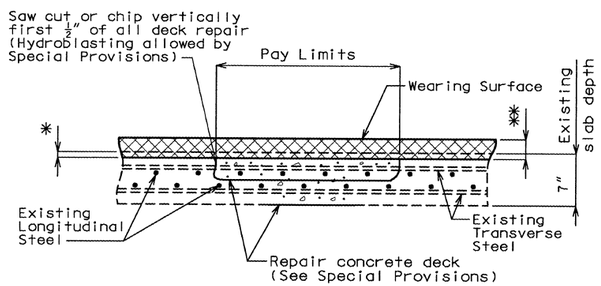

* First Scarify existing bridge deck ¼" min. and then remove any deteriorated concrete. (See Special Provisions)

** 2¼" (min.) Low Slump Concrete Wearing Surface

HALF-SOLED AREA

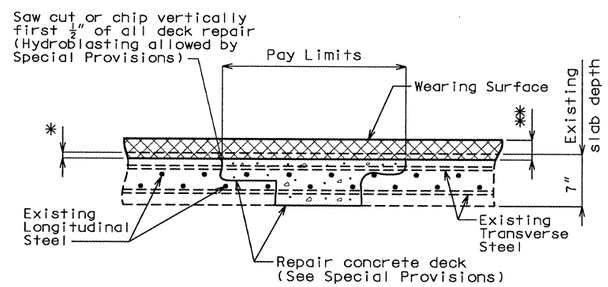

* First Scarify existing bridge deck ¼" min. and then remove any deteriorated concrete. (See Special Provisions)

** 2¼" (min.) Low Slump Concrete Wearing Surface

FULL DEPTH REPAIR IN HALF-SOLED AREA

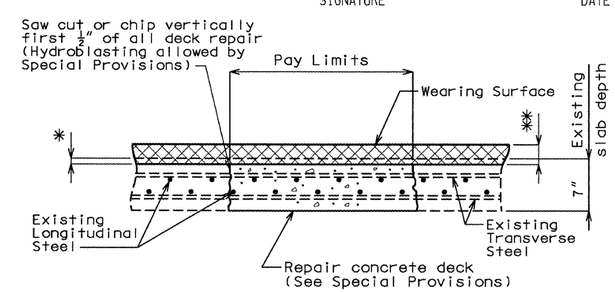

* First Scarify existing bridge deck ¼" min. and then remove any deteriorated concrete. (See Special Provisions)

** 2¼" (min.) Low Slump Concrete Wearing Surface

FULL DEPTH REPAIR

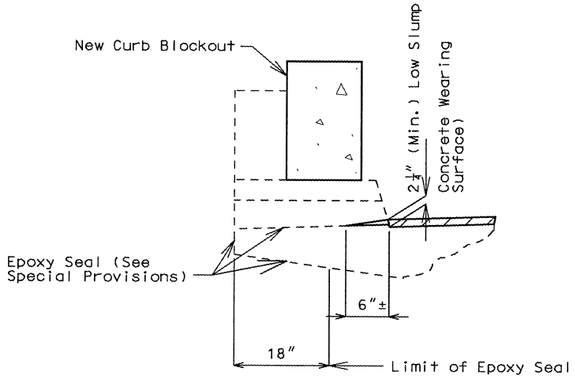

TYPICAL SECTION THRU CURB OUTLET

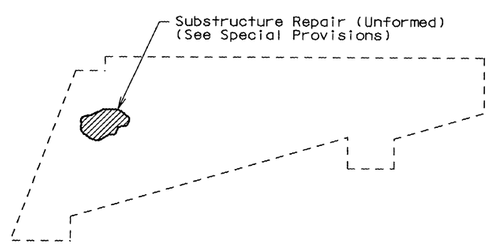

DETAIL OF END BENT WING SHOWING SUBSTRUCTURE REPAIR AT BENT NOS. 1 & 6

Note: For General Notes & Quantities, see sheet no. 2.

STATE OF MISSOURI
KIRSTEN MUNCK
4-25-05
NUMBER PE-2003001076
PROFESSIONAL ENGINEER

REPAIRS TO BRIDGE OVER I-70 & RAMPS "E", "F" & "H"

STATE ROAD FROM RTE. 350 NORTH TO RTE. 40

ABOUT 0.5 MILE SOUTH OF RTE. 40

PROJECT NO. STA. 377+77.18± (match existing)

JOB NO . J4I0712 RTE. I-435 (SBL)

JACKSON COUNTY

Date: / /

STD. 609.00
STD. 706.35
A09922

REV.

Designed Mar. 2002
Detailed Mar. 2002
Checked July 2002

Note: This drawing is not to scale. Follow dimensions.

Sheet No. 1 of 15

J:\PROJECTS\J4I0712\MicroStation\Bridge\J4I0712\A09922\a09922_001.dgn 12:45:33 PM 02/28/2005

State	Proj. No.	Sheet No.
MO	J4I0712	B35
021115-407	I-435-1(277)	

FINAL QUANTITIES

ITEM		TOTAL
Asphalt Removal (Bridges)	sq. ft.	17,700
Replacement of Expansion Device and Adjacent Concrete	lin. ft.	80
Removal of Existing Bridge Rails	lin. ft.	918
Bridge Approach Slab (Bridge)	sq. yd.	224
Substructure Repair (Unformed)	sq. ft.	33
Superstructure Repair (Unformed)	sq. ft.	29
Protective Coating for Concrete Bents and Concrete Piers under Expansion Devices	lump sum	1
Curb Blockout	lin. ft.	951
Repairing Concrete Deck (Half-Soling)	sq. ft.	11185
Full Depth Repair	sq. ft.	1208
Slab Edge Repair (Bridges)	lin. ft.	103
Silica Fume Concrete Wearing Surface	sq. yd.	1967
Strip Seal Expansion Joint System	lin. ft.	80

Notes:

Payment for the removal and replacement of any end posts shall be included in contract unit price for Curb Blockout per lin. ft.

Removal of concrete & reinforcing at End Bent Nos. 1 and 6 shall be completely covered in the contract unit price for Replacement of Expansion Device and Adjacent Concrete per lin. ft. (See Special Provisions).

All concrete & reinforcing required for replacement of backwall, curbs and parapets, necessary for placement of strip seal expansion devices at End Bent Nos. 1 and 6 shall be completely covered in the contract unit price for Replacement of Expansion Device and Adjacent Concrete per lin. ft. (See Special Provisions).

Removal of existing Bridge Approach Slabs shall be considered a Roadway Item.

General Notes:

Design Specifications:
AASHTO - 1996 and Interims thru 2000

Design Unit Stresses:
Class B-1 Concrete (Curb Blockout, Substructure Repair and Deck Repair) f'c = 4,000 psi

Reinforcing Steel (Grade 60, Epoxy Coated) fy = 60,000 psi

Joint Filler:

All joint filler shall meet the requirements of Section 1057.2.4 of the Missouri Standard Specifications, except as noted.

Reinforcing Steel:

Minimum clearance to reinforcing steel shall be 1-1/2", unless otherwise shown.

Bars bonded in old concrete not removed shall be cleanly stripped and embedded into new concrete where possible. If length is available, old bars shall extend into new concrete at least 40 diameters for smooth bars and 30 diameters for deformed bars, unless otherwise noted.

Traffic:
See roadway plans for traffic control during construction. Bridge work to be performed in 3 stages as shown on sheet no. 3.

Curb Blockouts:
Measurement of Curb Blockout is to the nearest linear foot, measured along outside of slab for left and right Curb Blockout.

For limits of Curb Blockout, see sheet nos. 9 and 10.

All exposed edges of curb blockout shall have $\frac{1}{2}$" radius or $\frac{3}{8}$" bevel unless otherwise shown.

Payment for concrete, reinforcing steel, resin anchors, and any other work incidental to the curb blockouts, complete-in-place, shall be included in the contract unit price for Curb Blockout per linear foot.

Cost of any concrete curb and parapet repair shall be considered completely covered in the contract unit price for Curb Blockout.

All reinforcement shall be epoxy coated.

Existing handrail shall be removed and will be considered the property of the contractor.

Resin Anchors:

The contractor shall use one of the resin anchor systems listed in the job special provisions. These anchor systems shall be installed according to the manufacturer's specifications, except as modified by the Job Special Provisions.

Cost of furnishing and installing the anchor system complete in place shall be included in the contract unit price for Curb Blockout.

The $\frac{5}{8}$" diameter resin anchor systems shall have a minimum ultimate pullout strength of 15,500 lbs. in concrete with f'c = 4,000 psi. (See Special Provisions).

An epoxy coated #5 Grade 60 reinforcing bar shall be substituted for the $\frac{5}{8}$"Ø threaded rod stud. For shape and length of reinforcing bar, see sheet nos. 8 and 13.

Miscellaneous:
Outline of old work is indicated by dashed lines. Heavy lines indicate new work.

Contractor shall verify all dimensions in field before ordering new material.

Roadway surfacing adjacent to bridge ends to match bridge overlay.

In order to maintain grade and a minimum thickness of overlay as shown on plans, it may be necessary to use additional quantities of overlay at various locations throughout the structure. No payment will be allowed for additional labor, materials or equipment for variations in thickness of overlay.

Contractor shall verify that bottom slab access doors at bottom of box girders and bottom of slab drains are in working condition and that work in this contract does not impair their function (see original plans for details). Cost shall be considered incidental to other pay items.

FINAL PLANS

I CERTIFY THAT THIS PLAN SHEET ACCURATELY DEPICTS THE CONFIGURATION AND LOCATION OF THE ROADWAY AND ALL ITS APPURTENANT FEATURES, TO THE BEST OF MY KNOWLEDGE, AS I AND MY STAFF HAVE OBSERVED THE CONTRACTOR'S CONSTRUCTION OF THIS PROJECT. I SPECIFICALLY DISCLAIM ANY RESPONSIBILITY FOR THE DESIGN OF THIS PROJECT, EXCEPT AS I AND MY STAFF MAY HAVE MODIFIED OR AUTHORIZED THE MODIFICATION OF THE PROJECT DESIGN DURING ITS CONSTRUCTION; AND I DISCLAIM RESPONSIBILITY FOR THE CONTRACTOR'S ACTUAL CONSTRUCTION OF THE PROJECT, EXCEPT AS I AND MY STAFF MAY HAVE DIRECTED OR ORDERED THAT THE PROJECT BE CONSTRUCTED.

SIGNATURE DATE 4-25-05

STATE OF MISSOURI
KIRSTEN MUNCK
NUMBER
PE-2003001076
PROFESSIONAL ENGINEER

4-25-05

Detailed Mar. 2002
Checked July 2002

Note: This drawing is not to scale. Follow dimensions.

JACKSON COUNTY

A09922

REV.

J:\PROJECTS\J4I0712\MicroStation\Bridge\J4I0712\A09922\a09922_002.dgn 12:48:54 PM 02/28/2005

State	Proj. No.	Sheet No.
MO	J4I0712	B36
021115-407	I-435-1(277)	

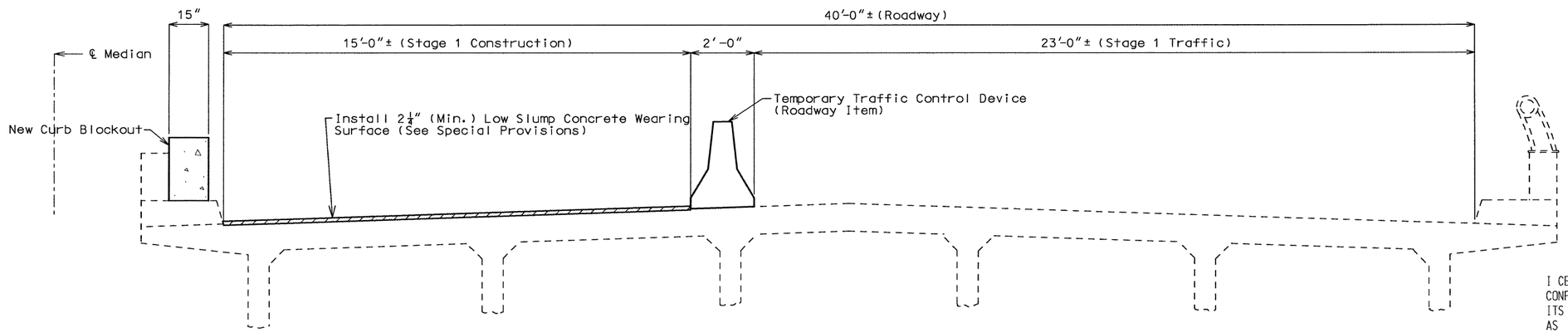

STAGE 1 CONSTRUCTION

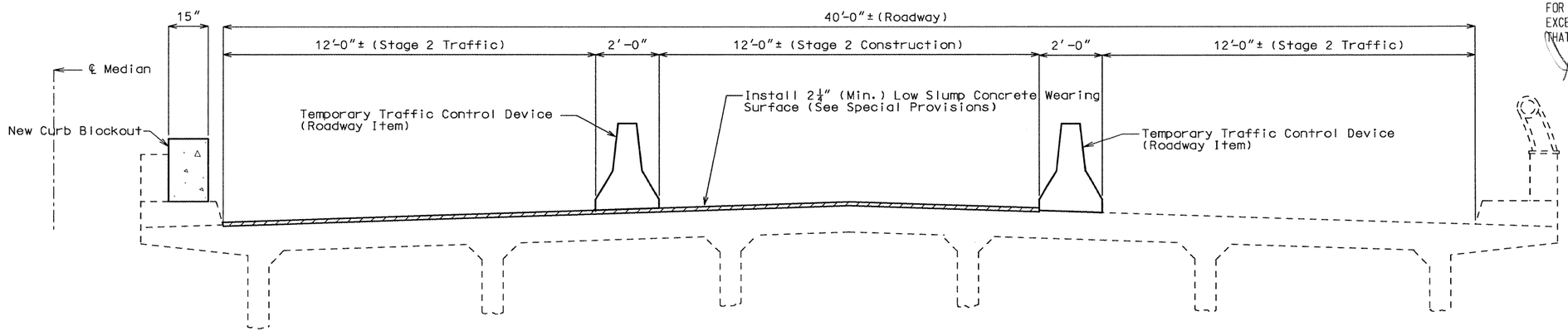

STAGE 2 CONSTRUCTION

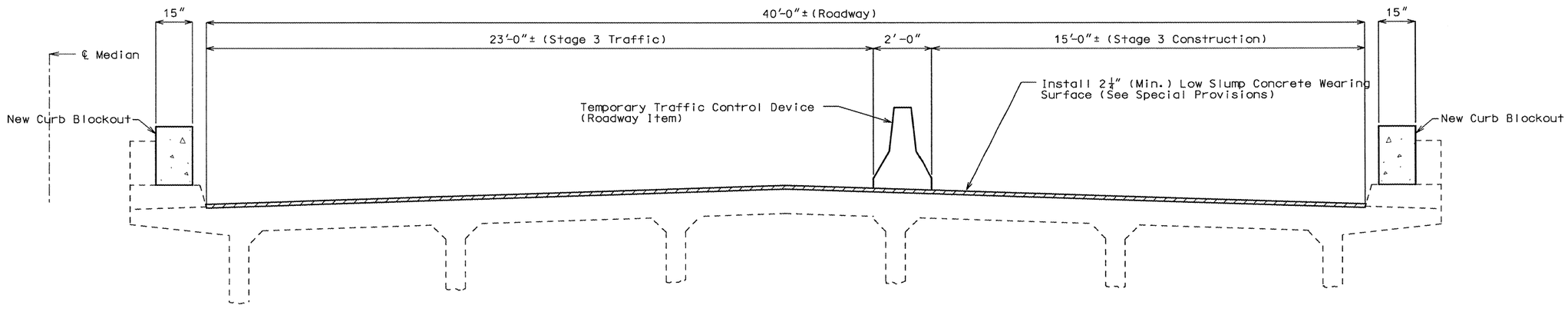

STAGE 3 CONSTRUCTION

FINAL PLANS

I CERTIFY THAT THIS PLAN SHEET ACCURATELY DEPICTS THE CONFIGURATION AND LOCATION OF THE ROADWAY AND ALL ITS APPURTENANT FEATURES, TO THE BEST OF MY KNOWLEDGE, AS I AND MY STAFF HAVE OBSERVED THE CONTRACTOR'S CONSTRUCTION OF THIS PROJECT. I SPECIFICALLY DISCLAIM ANY RESPONSIBILITY FOR THE DESIGN OF THIS PROJECT, EXCEPT AS I AND MY STAFF MAY HAVE MODIFIED OR AUTHORIZED THE MODIFICATION OF THE PROJECT DESIGN DURING ITS CONSTRUCTION; AND I DISCLAIM RESPONSIBILITY FOR THE CONTRACTOR'S ACTUAL CONSTRUCTION OF THE PROJECT, EXCEPT AS I AND MY STAFF MAY HAVE DIRECTED OR ORDERED THAT THE PROJECT BE CONSTRUCTED.

SIGNATURE 4-25-05 DATE

STATE OF MISSOURI
KIRSTEN MUNCK
4-25-05
NUMBER PE-2003001076
PROFESSIONAL ENGINEER

Detailed Mar. 2002
Checked July 2002

Note: This drawing is not to scale. Follow dimensions.

Sheet No. 3 of 15

JACKSON COUNTY

A09922

REV.

J:\PROJECTS\J410712\MicroStation\Bridge\J410712\A09922\a09922_003.dgn 02:58:08 PM 02/25/2005

State	Proj. No.	Sheet No.
MO	J4I0712	B37
021115-407	I-435-1(277)	

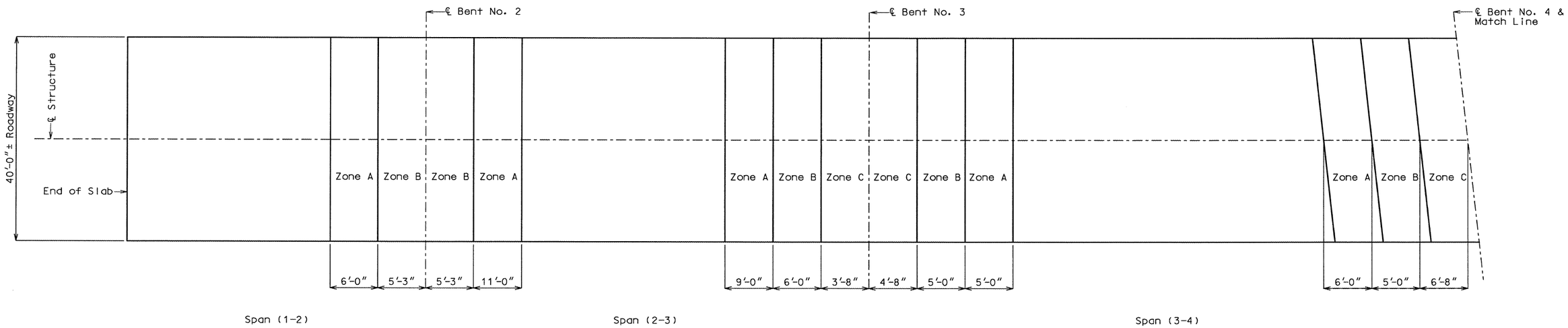

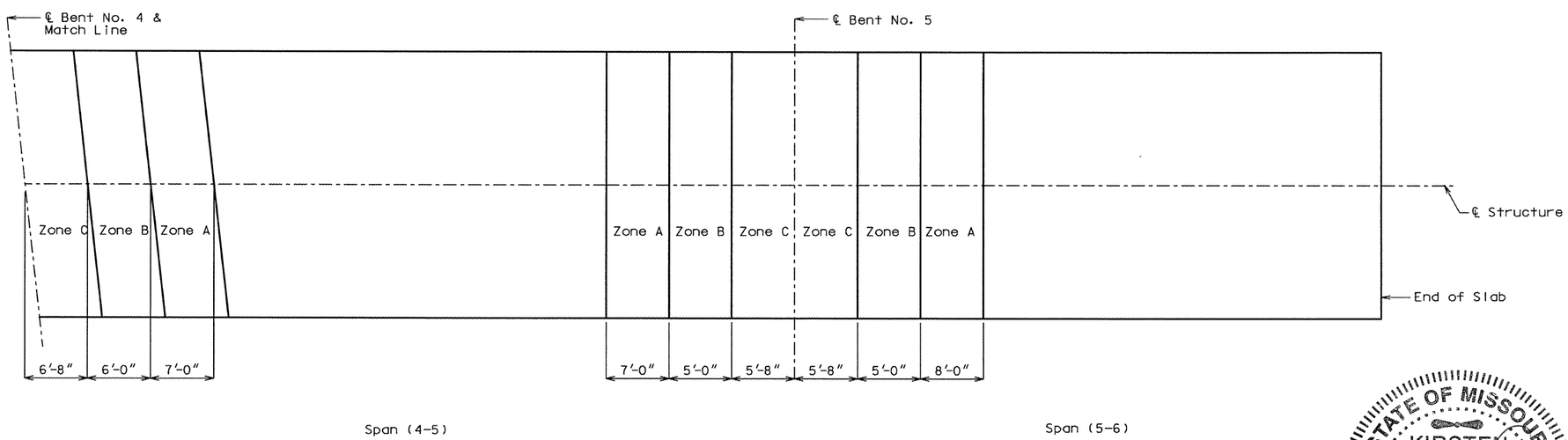

PLAN OF SLAB SHOWING SPECIAL REPAIR ZONES

Note:

Zones with the same letter designation may be repaired at the same time. Sequence of repairs follows Zone A, Zone B then Zone C.

Any repair in the remainder of the bridge that is within 42" of Zone A shall be completed before removing old concrete in Zone A.

STATE OF MISSOURI
KIRSTEN MUNCK
NUMBER PE-2003001076
PROFESSIONAL ENGINEER
4-25-05

FINAL PLANS

I CERTIFY THAT THIS PLAN SHEET ACCURATELY DEPICTS THE CONFIGURATION AND LOCATION OF THE ROADWAY AND ALL ITS APPURTENANT FEATURES, TO THE BEST OF MY KNOWLEDGE, AS I AND MY STAFF HAVE OBSERVED THE CONTRACTOR'S CONSTRUCTION OF THIS PROJECT. I SPECIFICALLY DISCLAIM ANY RESPONSIBILITY FOR THE DESIGN OF THIS PROJECT, EXCEPT AS I AND MY STAFF MAY HAVE MODIFIED OR AUTHORIZED THE MODIFICATION OF THE PROJECT DESIGN DURING ITS CONSTRUCTION; AND I DISCLAIM RESPONSIBILITY FOR THE CONTRACTOR'S ACTUAL CONSTRUCTION OF THE PROJECT, EXCEPT AS I AND MY STAFF MAY HAVE DIRECTED OR ORDERED THAT THE PROJECT BE CONSTRUCTED.

SIGNATURE 4-25-05 DATE

Detailed Mar. 2002
Checked July 2002

Note: This drawing is not to scale. Follow dimensions.

JACKSON COUNTY A09922

REV.

State	Proj. No.	Sheet No.
MO	J4I0712	B38
021115-407	I-435-1(277)	

FINAL PLANS

I CERTIFY THAT THIS PLAN SHEET ACCURATELY DEPICTS THE CONFIGURATION AND LOCATION OF THE ROADWAY AND ALL ITS APPURTENANT FEATURES, TO THE BEST OF MY KNOWLEDGE, AS I AND MY STAFF HAVE OBSERVED THE CONTRACTOR'S CONSTRUCTION OF THIS PROJECT. I SPECIFICALLY DISCLAIM ANY RESPONSIBILITY FOR THE DESIGN OF THIS PROJECT, EXCEPT AS I AND MY STAFF MAY HAVE MODIFIED OR AUTHORIZED THE MODIFICATION OF THE PROJECT DESIGN DURING ITS CONSTRUCTION, AND I DISCLAIM RESPONSIBILITY FOR THE CONTRACTOR'S ACTUAL CONSTRUCTION OF THE PROJECT, EXCEPT AS I AND MY STAFF MAY HAVE DIRECTED OR ORDERED THAT THE PROJECT BE CONSTRUCTED.

SIGNATURE DATE 4-25-05

STATE OF MISSOURI KIRSTEN MUNCK 4-25-05 NUMBER PE-2003001076 PROFESSIONAL ENGINEER

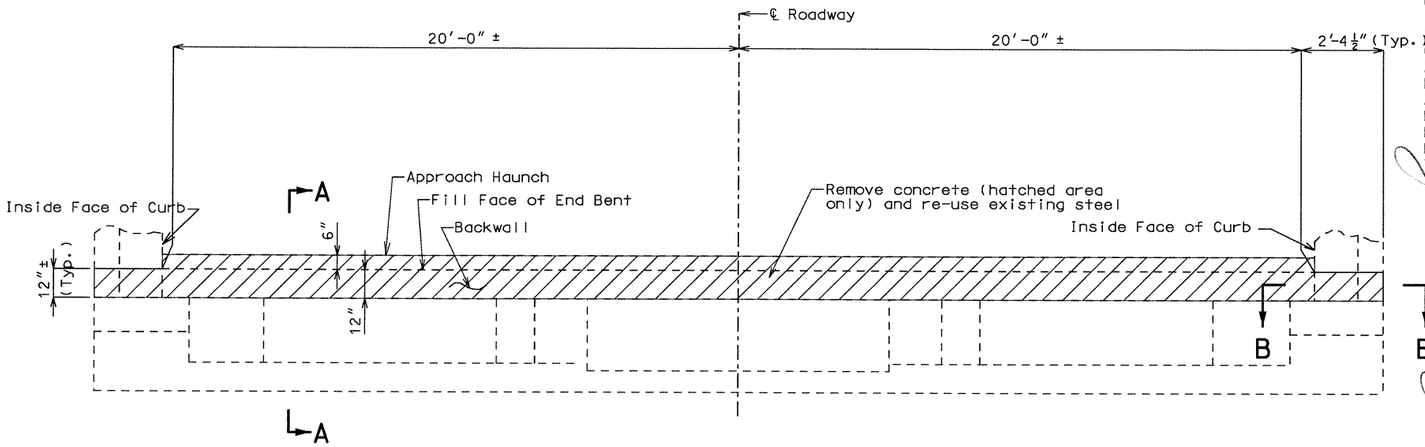

PART PLAN OF END BENT SHOWING EXISTING CONCRETE REMOVAL

(Construction staging is not shown, but shall be consistent with that shown on sheet no. 3)

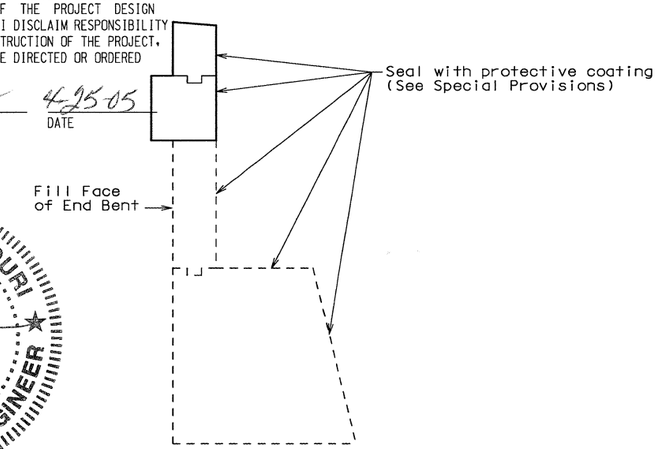

SECTION THRU END BENT SHOWING PROTECTIVE COATING LIMITS

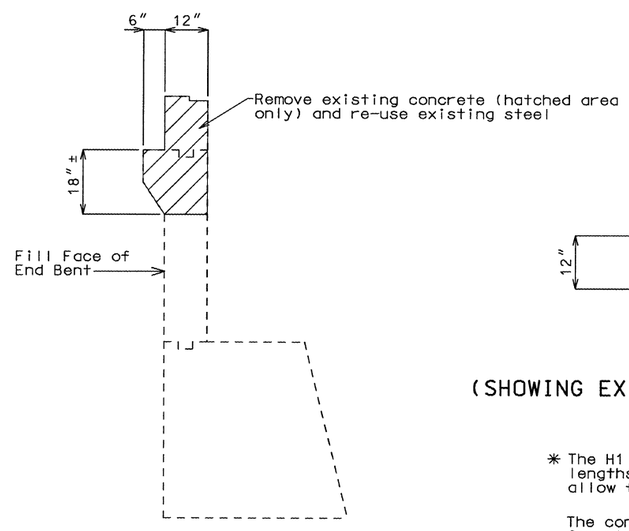

SECTION A-A

(SHOWING EXISTING CONCRETE REMOVAL)

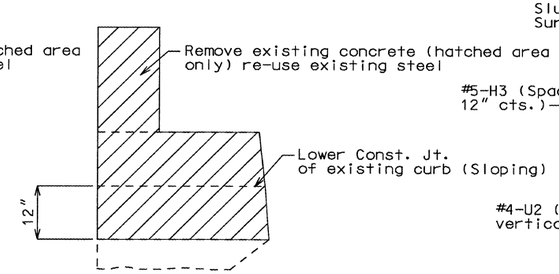

SECTION B-B

(SHOWING EXISTING CONCRETE REMOVAL)

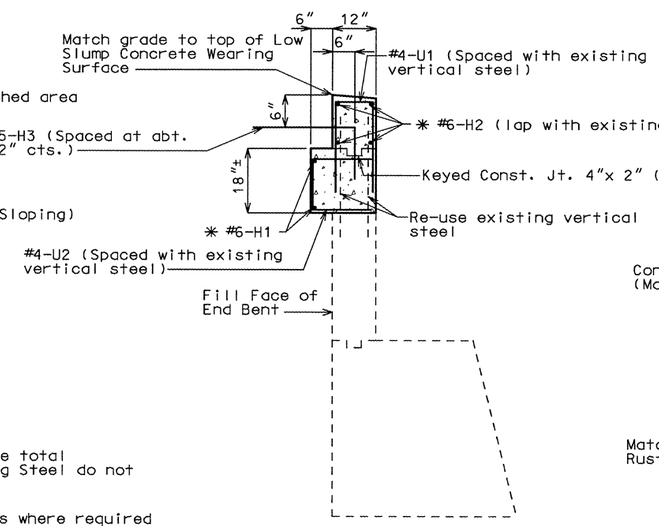

SECTION A-A

(SHOWING CONCRETE REPLACEMENT)

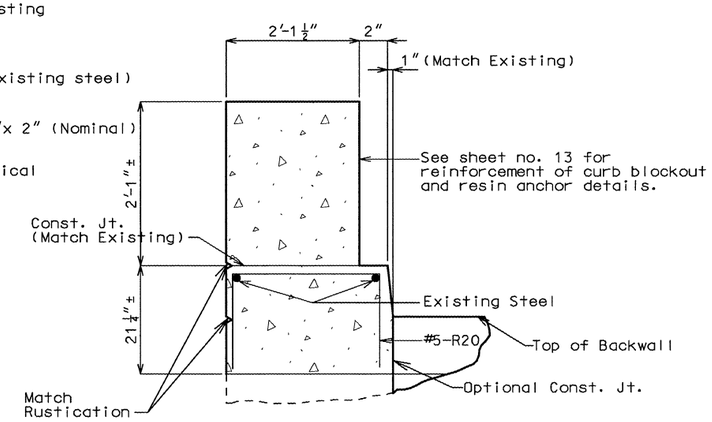

SECTION B-B

(SHOWING CONCRETE REPLACEMENT)

* The H1 and H2 bars shall be segmented bars. The total lengths for H-bars shown in bill of Reinforcing Steel do not allow for staging.

The contractor shall use mechanical bar splices where required for placement of #6-H1 and H2 bars and actual bar segment lengths will be determined based upon manufacturers recommendations of installation and stage construction.

The cost of furnishing and installing the bar splices shall be included in the contract unit price for other items.

See Job Special Provisions for additional requirements of mechanical bar splices. Mechanical bar splices for epoxy coated bars shall be epoxy coated.

Note: For expansion device placement in backwall, see sheet nos. 6 & 7.

Notes: Concrete for replacement shall be Class B-1. For details of strip seal expansion device replacement, see sheet nos. 6 and 7.

Payment for removal and replacement of curb and parapets shall be completely covered in the contract unit price for Replacement of Expansion Device and Ajacent Concrete (See Special Provisions).

All new reinforcing steel shall be epoxy coated.

TYPICAL DETAILS FOR END BENT NOS. 1 & 6

State	Proj. No.	Sheet No.
MO	J410712	B39
021115-407	I-435-1(277)	

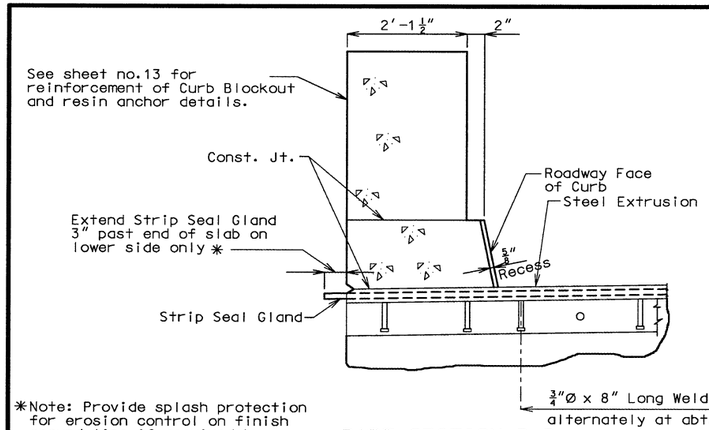

✱Note: Provide splash protection for erosion control on finish ground line if required by the engineer (Roadway Item).

PART SECTION D-D

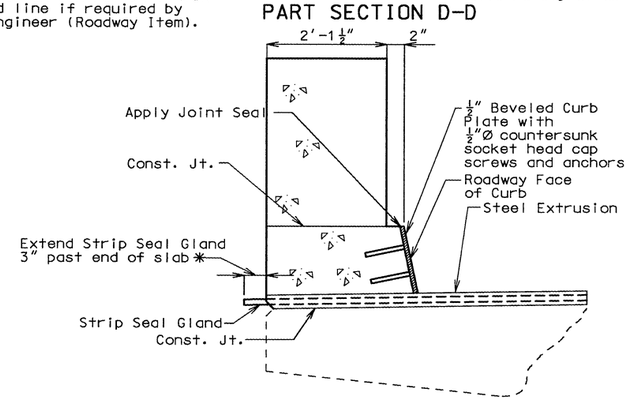

PART SECTION E-E (SHOWING CONCRETE REPLACEMENT)

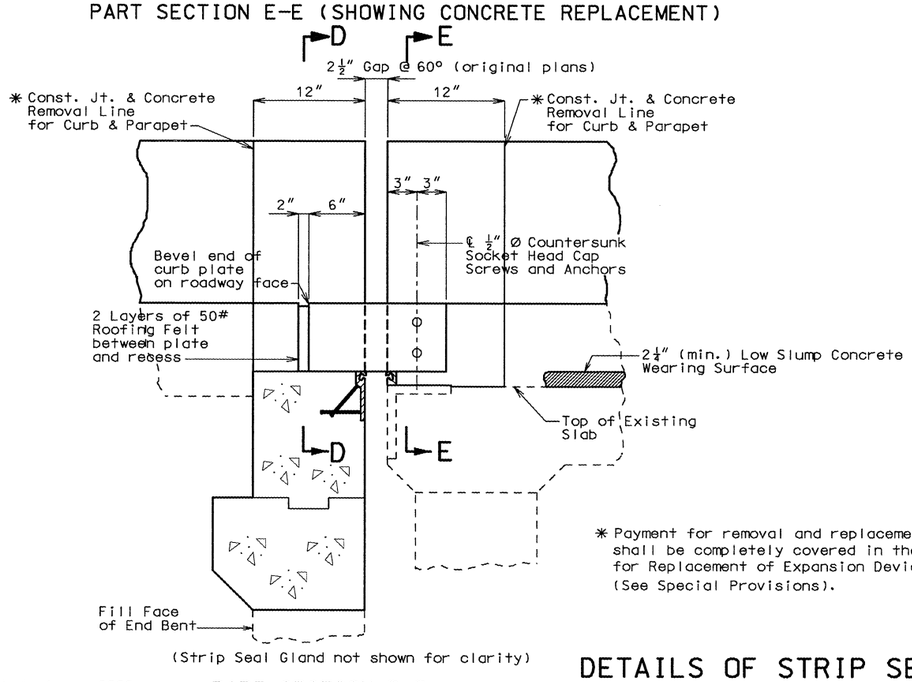

PART SECTION B-B

✱ Payment for removal and replacement of curb and parapets shall be completely covered in the contract unit price for Replacement of Expansion Device and Adjacent Concrete (See Special Provisions).

FINAL PLANS

I CERTIFY THAT THIS PLAN SHEET ACCURATELY DEPICTS THE CONFIGURATION AND LOCATION OF THE ROADWAY AND ALL ITS APPURTENANT FEATURES, TO THE BEST OF MY KNOWLEDGE, AS I AND MY STAFF HAVE OBSERVED THE CONTRACTOR'S CONSTRUCTION OF THIS PROJECT. I SPECIFICALLY DISCLAIM ANY RESPONSIBILITY FOR THE DESIGN OF THIS PROJECT, EXCEPT AS I AND MY STAFF MAY HAVE MODIFIED OR AUTHORIZED THE MODIFICATION OF THE PROJECT DESIGN DURING ITS CONSTRUCTION; AND I DISCLAIM RESPONSIBILITY FOR THE CONTRACTOR'S ACTUAL CONSTRUCTION OF THE PROJECT, EXCEPT AS I AND MY STAFF MAY HAVE DIRECTED OR ORDERED THAT THE PROJECT BE CONSTRUCTED.

SIGNATURE — DATE 4/25/05

STATE OF MISSOURI
KIRSTEN MUNCK
4-25-05
NUMBER PE-2003001076
PROFESSIONAL ENGINEER

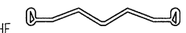

DETAIL OF GLAND

Note: Use single layer gland, no multiple layer glands allowed.

Strip seal gland size = 4"

STRIP SEAL GLAND

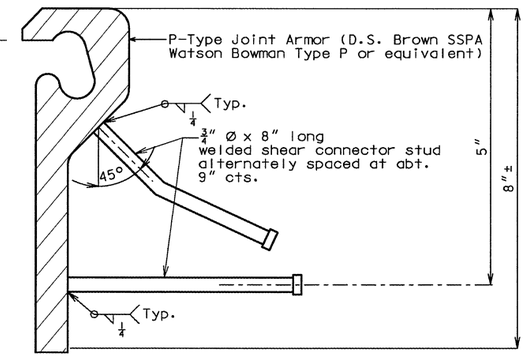

DETAIL OF STEEL EXTRUSION IN BACKWALL OF END BENT

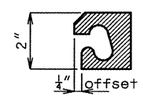

DETAIL OF STEEL EXTRUSION ON EXISTING SLAB

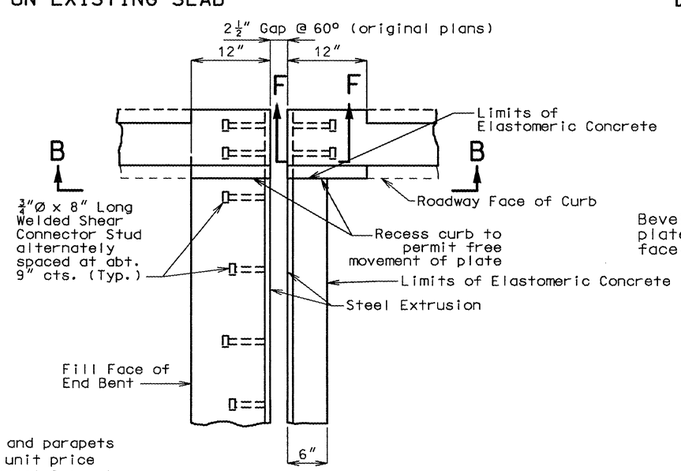

PART PLAN

NOTE:

The expansion device shall be fabricated and installed in accordance with the recommendations of the manufacturer, and as set forth in the Special Provisions.

The contractor shall verify all dimensions prior to fabrication.

Splices of steel extrusion shall develop full strength.

All steel shall be ASTM A709 Grade 36, except steel extrusions shall be ASTM A709 Grade 50W or Grade 36.

Neoprene Strip Seal shall meet ASTM D-2628.

Anchors for the extrusions or armor shall be approved welded studs (C1010 thru C1020).

All welds shall conform to Section 712 of the Missouri Standard Specifications.

Concrete shall be forced under and around strip seal extrusions and studs. Proper consolidation of the concrete shall be achieved by localized internal vibration.

Plan dimensions are based on installation at 60°F. The gap shall be increased 1/16" for each 10° fall in temperature and decreased 1/16" for each 10° rise in temperature from the installation temperature.

Longitudinal reinforcing steel shall be placed so that ends shall not be more than 1"± from vertical leg of extrusion at Expansion Device.

Structural steel for the expansion device shall be coated with a minimum of two coats of inorganic zinc primer (5 mils minimum). Anchors need not be protected from overspray.

Payment for furnishing, coating and placing steel extrusions, miscellaneous structural steel, and neoprene strip seal shall be made under the contract unit price for Strip Seal Expansion Joint System per lin. ft.

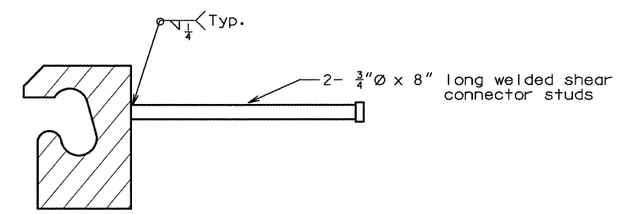

Note: Shift existing reinforcement in curb to clear studs.

PART SECTION F-F

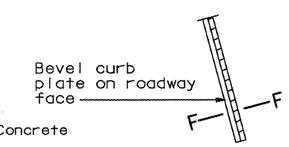

AT END OF BEVELED CURB PLATE

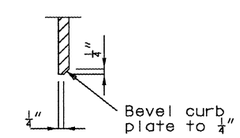

SECTION F-F

DETAILS OF STRIP SEAL EXPANSION DEVICE REPLACEMENT AT END BENTS

Detailed Apr. 2002
Checked July 2002

Sheet No. 6 of 15

JACKSON COUNTY

A09922

State	Proj. No.	Sheet No.
MO	J4I0712	B40
021115-407	I-435-1(277)	

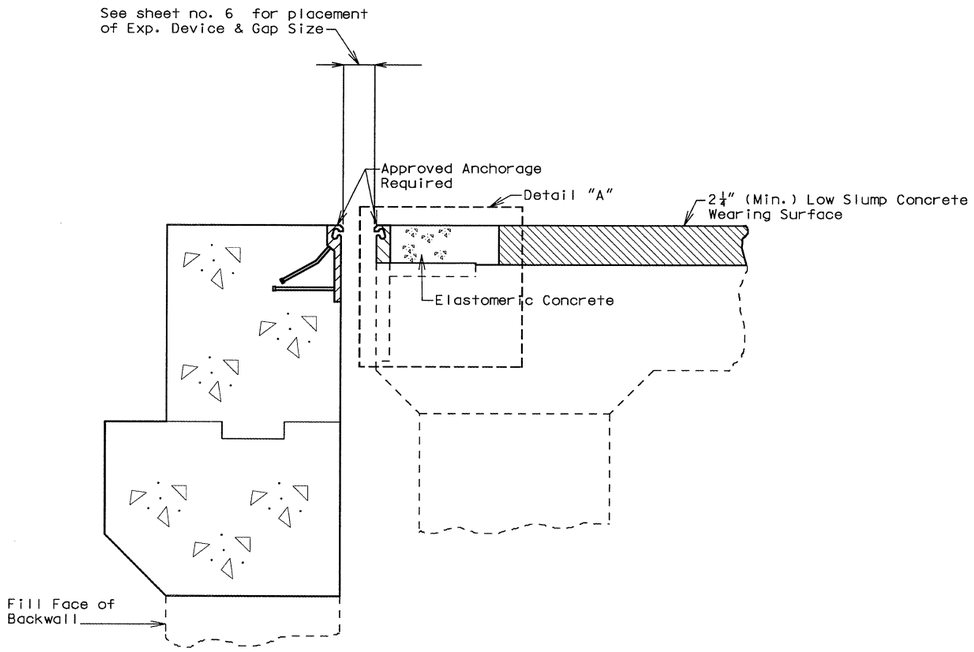

PART SECTION THRU END OF SLAB
AT BENT NO. 1

Note: Bent No. 6 similar.

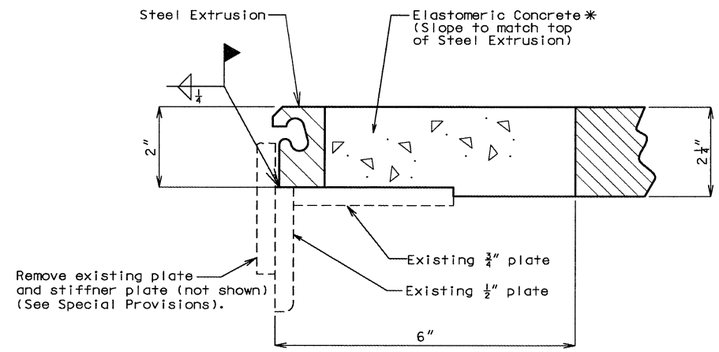

DETAIL "A"

✱ Submit manufacturer's specifications and installation requirements to the engineer for approval.

STATE OF MISSOURI
KIRSTEN MUNCK
4-25-05
NUMBER
PE-2003001076
PROFESSIONAL ENGINEER

FINAL PLANS

I CERTIFY THAT THIS PLAN SHEET ACCURATELY DEPICTS THE CONFIGURATION AND LOCATION OF THE ROADWAY AND ALL ITS APPURTENANT FEATURES, TO THE BEST OF MY KNOWLEDGE, AS I AND MY STAFF HAVE OBSERVED THE CONTRACTOR'S CONSTRUCTION OF THIS PROJECT. I SPECIFICALLY DISCLAIM ANY RESPONSIBILITY FOR THE DESIGN OF THIS PROJECT, EXCEPT AS I AND MY STAFF MAY HAVE MODIFIED OR AUTHORIZED THE MODIFICATION OF THE PROJECT DESIGN DURING ITS CONSTRUCTION; AND I DISCLAIM RESPONSIBILITY FOR THE CONTRACTOR'S ACTUAL CONSTRUCTION OF THE PROJECT, EXCEPT AS I AND MY STAFF MAY HAVE DIRECTED OR ORDERED THAT THE PROJECT BE CONSTRUCTED.

SIGNATURE 4-25-05 DATE

DETAILS OF STRIP SEAL EXPANSION DEVICE AT END BENTS

Detailed Apr. 2002
Checked July 2002

Note: This drawing is not to scale. Follow dimensions.

JACKSON COUNTY A09922 REV.

J:\PROJECTS\J4I0712\MicroStation\Bridge\J4I0712\A09922\a09922_007.dgn 02:58:11 PM 02/25/2005

STATE	PROJ. NO.	SHEET NO.
MO	J4I0712	B41
021115-407	I-435-1(277)	

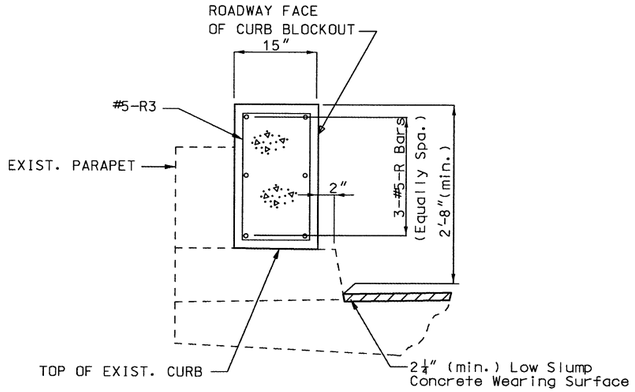

TYPICAL SECTION THRU CURB
BLOCKOUT SHOWING REINFORCEMENT

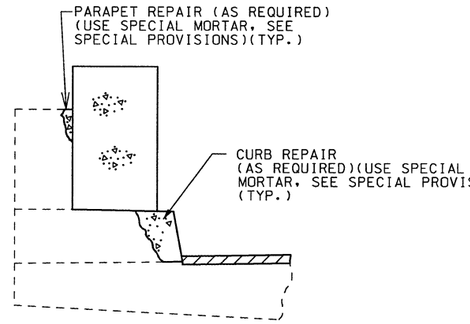

TYPICAL SECTION THRU CURB BLOCKOUT
SHOWING CONCRETE CURB & PARAPET REPAIR

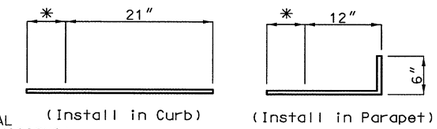

DETAILS OF RESIN ANCHORS
AT 15" CURB BLOCKOUTS

* Manufacturer's embedment depth but no greater than 5" in Exist. Parapet and no greater than 7" in Exist. Curb (4" over curb outlets).

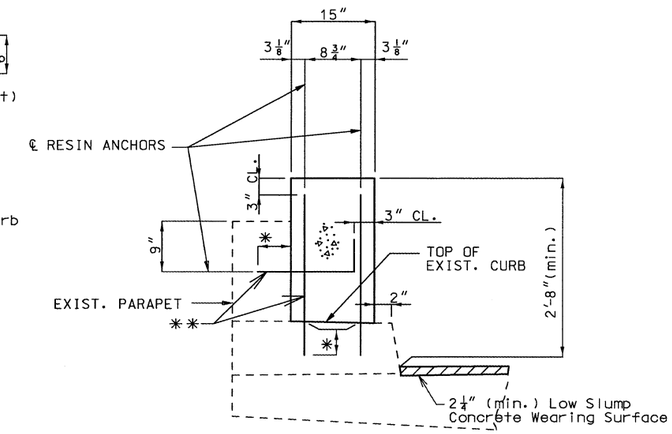

TYPICAL SECTION THRU CURB
BLOCKOUT SHOWING RESIN ANCHORS

FINAL PLANS

I CERTIFY THAT THIS PLAN SHEET ACCURATELY DEPICTS THE CONFIGURATION AND LOCATION OF THE ROADWAY AND ALL ITS APPURTENANT FEATURES, TO THE BEST OF MY KNOWLEDGE, AS I AND MY STAFF HAVE OBSERVED THE CONTRACTOR'S CONSTRUCTION OF THIS PROJECT. I SPECIFICALLY DISCLAIM ANY RESPONSIBILITY FOR THE DESIGN OF THIS PROJECT, EXCEPT AS I AND MY STAFF MAY HAVE MODIFIED OR AUTHORIZED THE MODIFICATION OF THE PROJECT DESIGN DURING ITS CONSTRUCTION; AND I DISCLAIM RESPONSIBILITY FOR THE CONTRACTOR'S ACTUAL CONSTRUCTION OF THE PROJECT, EXCEPT AS I AND MY STAFF MAY HAVE DIRECTED OR ORDERED THAT THE PROJECT BE CONSTRUCTED.

SIGNATURE DATE 4-25-05

STATE OF MISSOURI
KIRSTEN MUNCK
4-25-05
NUMBER PE-2003001076
PROFESSIONAL ENGINEER

** Resin anchors spaced with alternating pattern at abt. 12" cts.

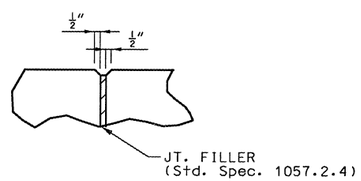

FILLED JOINT DETAIL

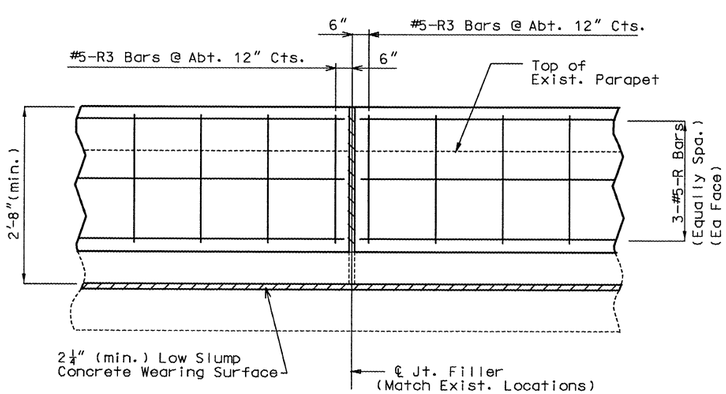

PART ELEVATION OF CURB BLOCKOUT SHOWING REINFORCEMENT

NOTES FOR CURB BLOCKOUT:

Concrete in curb blockout shall be Class B-1.

Measurement of the concrete Curb Blockout is to the nearest linear foot, measured along the inside face of existing parapet from end of wing to the end of wing.

All exposed edges of curb blockout shall have ½" radius or ⅜" bevel unless otherwise shown.

Payment for concrete, reinforcing steel, resin anchors and any other work incidental to the curb blockout complete in place shall be included in the contract unit price for Curb Blockout.

Cost of any concrete curb & parapet repair shall be considered completely covered in the contract unit price for Curb Blockout.

Use a minimum lap of 3'-0" for #5 horizontal Curb Blockout bars where necessary.

The cross-sectional area of the Curb Blockout above top of existing curb = 2.59± sq. ft.

Provide or maintain access to existing active conduit systems and junction boxes.

Shift reinforcing steel in field where necessary to clear access openings for existing active junction boxes and conduit systems.

Match locations of existing filled joints.

Longitudinal reinforcing steel shall be field cut to required length between filled joints.

All reinforcing shall be epoxy coated.

Contractor shall prevent damage to existing conduit at light support standards and elsewhere on bridge (See Special Provisions).

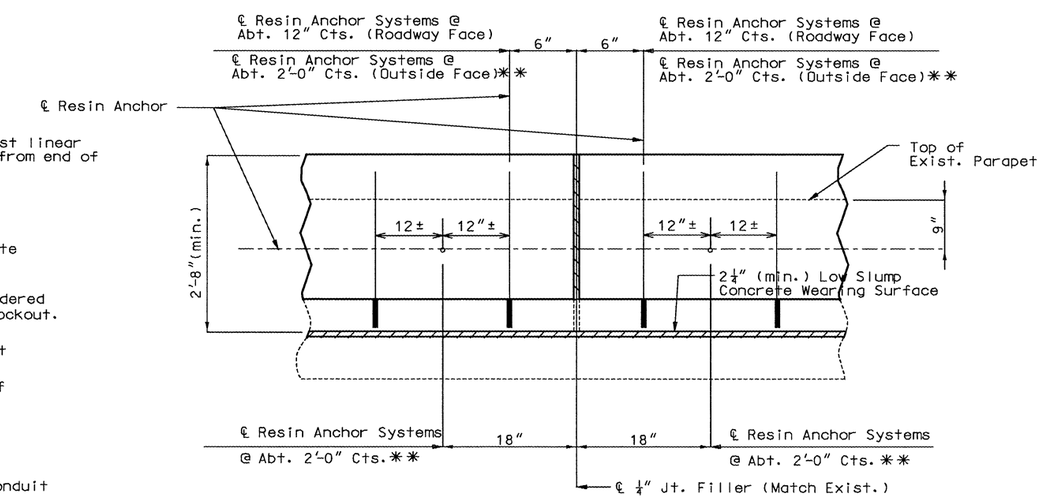

PART SECTION OF CURB BLOCKOUT SHOWING RESIN ANCHORS

DETAILED Mar. 2002
CHECKED July 2002

TYPICAL DETAILS OF CURB BLOCKOUT

NOTE: THIS DRAWING IS NOT TO SCALE. FOLLOW DIMENSIONS.

SHEET NO. 8 OF 15

JACKSON COUNTY

A09922

STATE	PROJ. NO.	SHEET NO.
MO	J4I0712	B42
021115-407	I-435-1(277)	

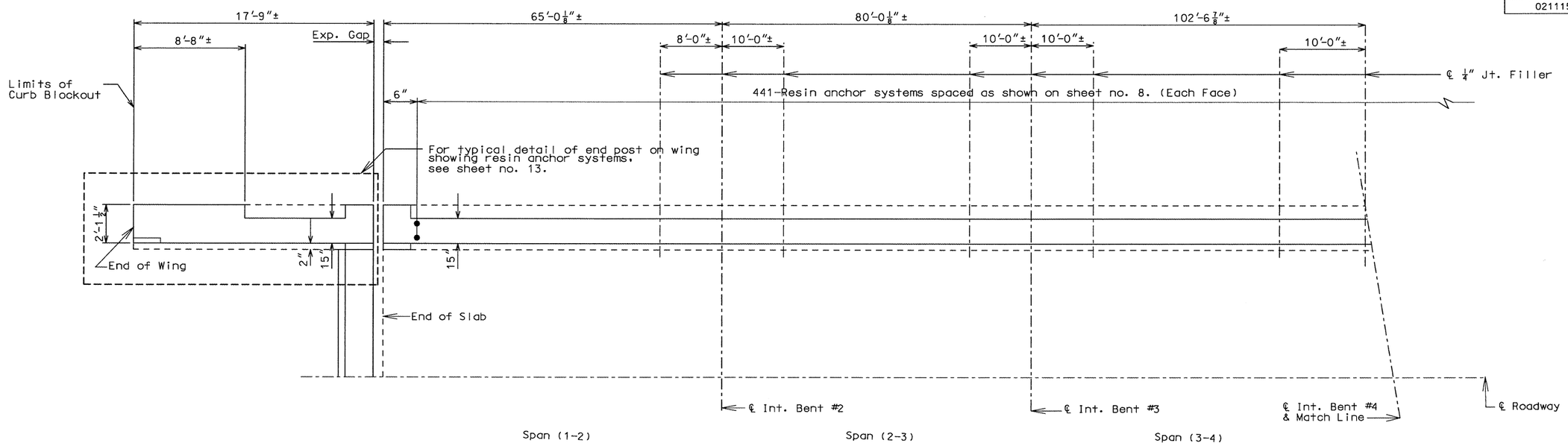

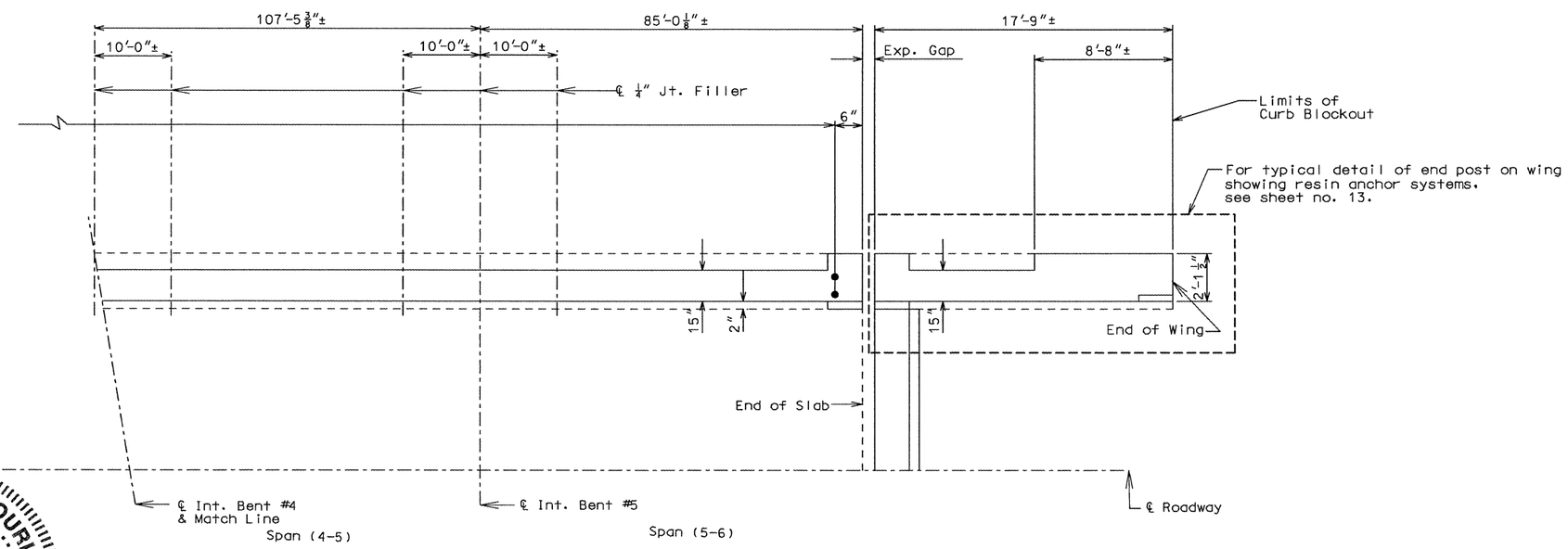

Note: Longitudinal dimensions shown are along ℄ parapet.
Match existing curb joints.
For details of resin anchor systems not shown, see sheet no. 8.

PLAN OF LEFT CURB BLOCKOUT SHOWING RESIN ANCHOR SPACING

FINAL PLANS

I CERTIFY THAT THIS PLAN SHEET ACCURATELY DEPICTS THE CONFIGURATION AND LOCATION OF THE ROADWAY AND ALL ITS APPURTENANT FEATURES, TO THE BEST OF MY KNOWLEDGE, AS I AND MY STAFF HAVE OBSERVED THE CONTRACTOR'S CONSTRUCTION OF THIS PROJECT. I SPECIFICALLY DISCLAIM ANY RESPONSIBILITY FOR THE DESIGN OF THIS PROJECT, EXCEPT AS I AND MY STAFF MAY HAVE MODIFIED OR AUTHORIZED THE MODIFICATION OF THE PROJECT DESIGN DURING ITS CONSTRUCTION; AND I DISCLAIM RESPONSIBILITY FOR THE CONTRACTOR'S ACTUAL CONSTRUCTION OF THE PROJECT, EXCEPT AS I AND MY STAFF MAY HAVE DIRECTED OR ORDERED THAT THE PROJECT BE CONSTRUCTED.

SIGNATURE 4-25-05 DATE

STATE OF MISSOURI
KIRSTEN MUNCK
NUMBER PE-2003001076
PROFESSIONAL ENGINEER

DETAILED MAR. 2002
CHECKED July 2002

NOTE: THIS DRAWING IS NOT TO SCALE. FOLLOW DIMENSIONS.

SHEET NO. 9 OF 15.

JACKSON COUNTY

A09922

STATE	PROJ. NO.	SHEET NO.
MO	J4I0712	B43
021115-407	I-435-1(277)	

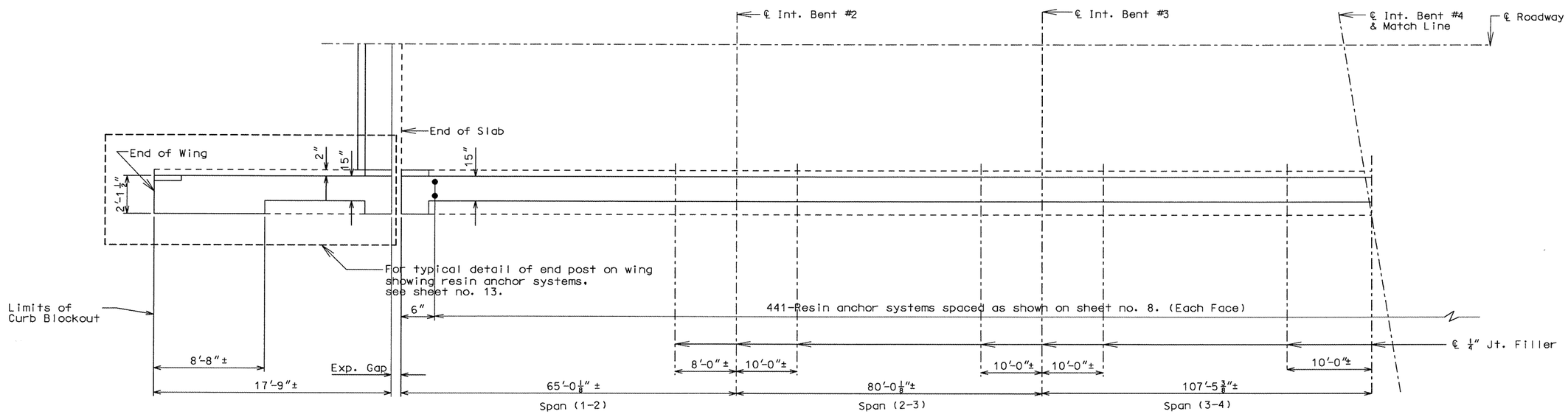

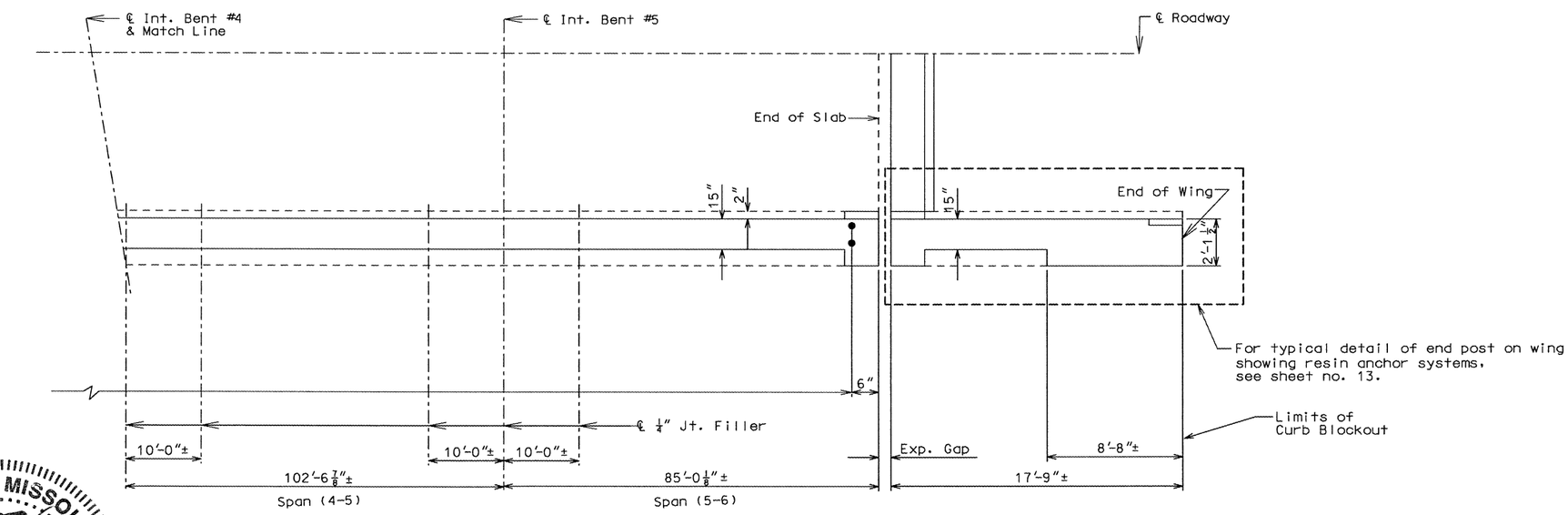

Note: Longitudinal dimensions shown are along ℄ parapet.
Match existing curb joints.
For details of resin anchor systems not shown, see sheet no. 8.

PLAN OF RIGHT CURB BLOCKOUT SHOWING RESIN ANCHOR SPACING

FINAL PLANS

I CERTIFY THAT THIS PLAN SHEET ACCURATELY DEPICTS THE CONFIGURATION AND LOCATION OF THE ROADWAY AND ALL ITS APPURTENANT FEATURES, TO THE BEST OF MY KNOWLEDGE, AS I AND MY STAFF HAVE OBSERVED THE CONTRACTOR'S CONSTRUCTION OF THIS PROJECT. I SPECIFICALLY DISCLAIM ANY RESPONSIBILITY FOR THE DESIGN OF THIS PROJECT, EXCEPT AS I AND MY STAFF MAY HAVE MODIFIED OR AUTHORIZED THE MODIFICATION OF THE PROJECT DESIGN DURING ITS CONSTRUCTION; AND I DISCLAIM RESPONSIBILITY FOR THE CONTRACTOR'S ACTUAL CONSTRUCTION OF THE PROJECT, EXCEPT AS I AND MY STAFF MAY HAVE DIRECTED OR ORDERED THAT THE PROJECT BE CONSTRUCTED.

SIGNATURE 4-25-05 DATE

STATE OF MISSOURI
KIRSTEN MUNCK
4-25-05
NUMBER
PE-2003001076
PROFESSIONAL ENGINEER

DETAILED MAR. 2002
CHECKED July 2002

NOTE: THIS DRAWING IS NOT TO SCALE. FOLLOW DIMENSIONS.

SHEET NO. 10 OF 15.

JACKSON COUNTY

A09922

STATE	PROJ. NO.	SHEET NO.
MO	J4I0712	B44
021115-407	I-435-1(277)	

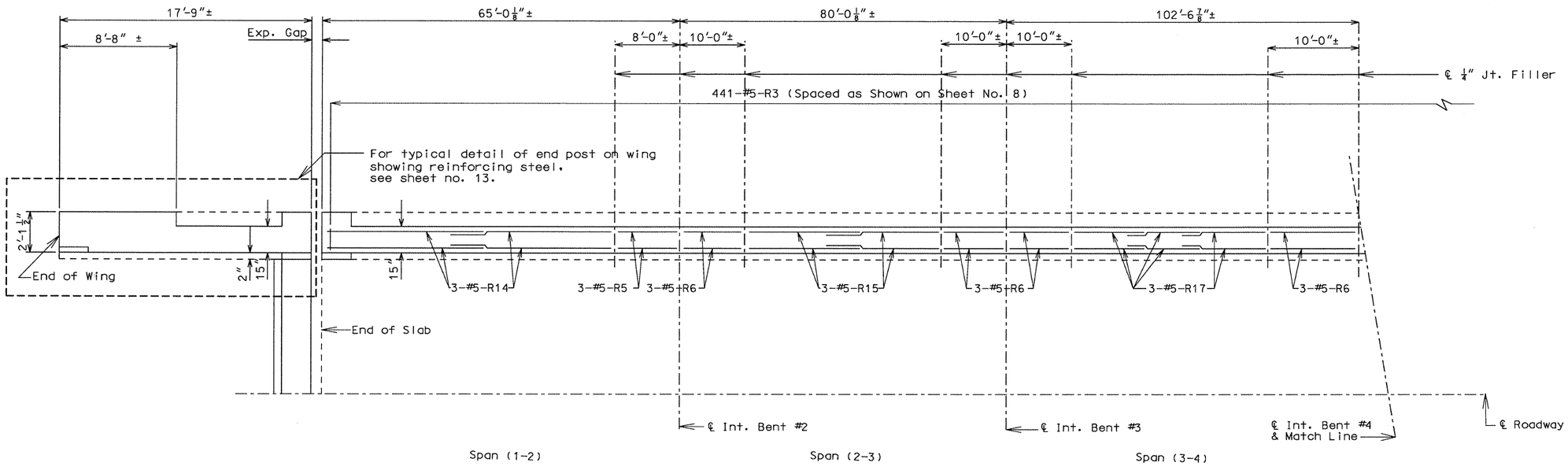

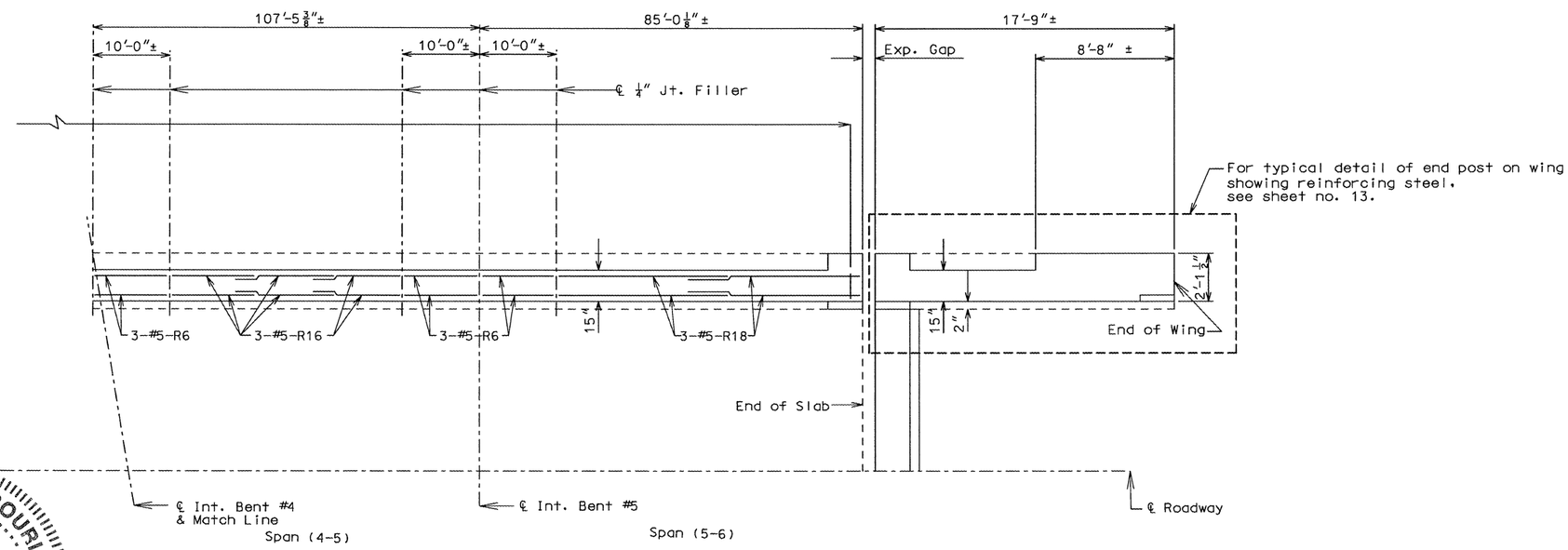

FINAL PLANS

I CERTIFY THAT THIS PLAN SHEET ACCURATELY DEPICTS THE CONFIGURATION AND LOCATION OF THE ROADWAY AND ALL ITS APPURTENANT FEATURES, TO THE BEST OF MY KNOWLEDGE, AS I AND MY STAFF HAVE OBSERVED THE CONTRACTOR'S CONSTRUCTION OF THIS PROJECT. I SPECIFICALLY DISCLAIM ANY RESPONSIBILITY FOR THE DESIGN OF THIS PROJECT, EXCEPT AS I AND MY STAFF MAY HAVE MODIFIED OR AUTHORIZED THE MODIFICATION OF THE PROJECT DESIGN DURING ITS CONSTRUCTION; AND I DISCLAIM RESPONSIBILITY FOR THE CONTRACTOR'S ACTUAL CONSTRUCTION OF THE PROJECT, EXCEPT AS I AND MY STAFF MAY HAVE DIRECTED OR ORDERED THAT THE PROJECT BE CONSTRUCTED.

SIGNATURE 4-25-05 DATE

STATE OF MISSOURI
KIRSTEN MUNCK
NUMBER PE-2003001076
PROFESSIONAL ENGINEER

Note: Longitudinal dimensions shown are along ℄ parapet.
Match existing curb joints.
For details of reinforcing steel not shown, see sheet no. 8.
Use a minimum lap of 3'-0" for #5-R horizontal curb blockout bars.

PLAN OF LEFT CURB BLOCKOUT SHOWING REINFORCING STEEL

DETAILED MAR. 2002
CHECKED July 2002

NOTE: THIS DRAWING IS NOT TO SCALE. FOLLOW DIMENSIONS.

SHEET NO. 11 OF 15.

JACKSON COUNTY

A09922

STATE	PROJ. NO.	SHEET NO.
MO	J4I0712	B45
021115-407	I-435-1(277)	

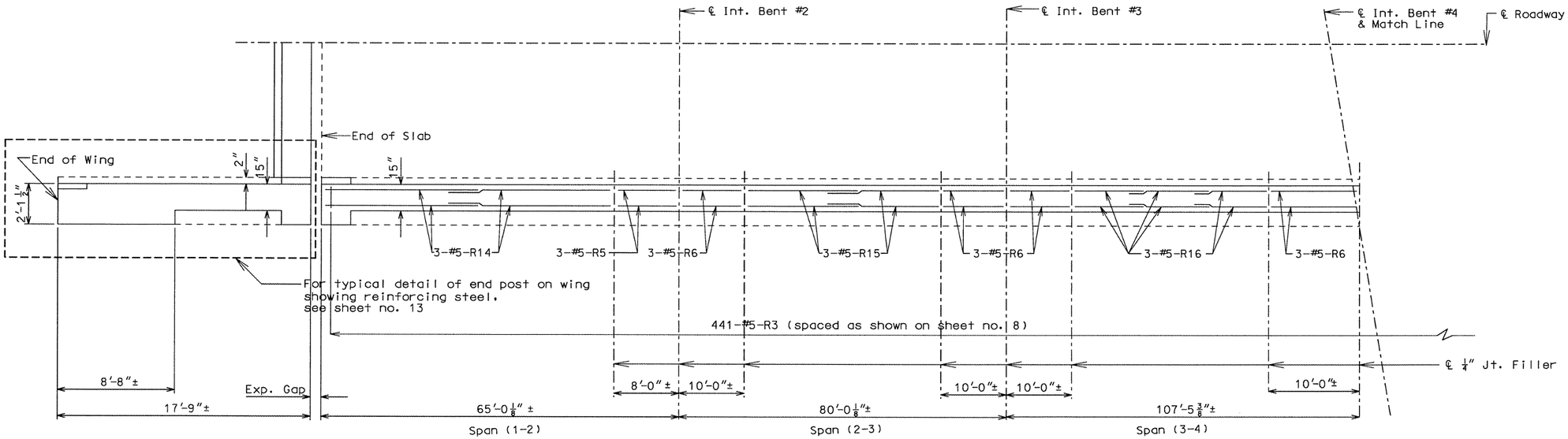

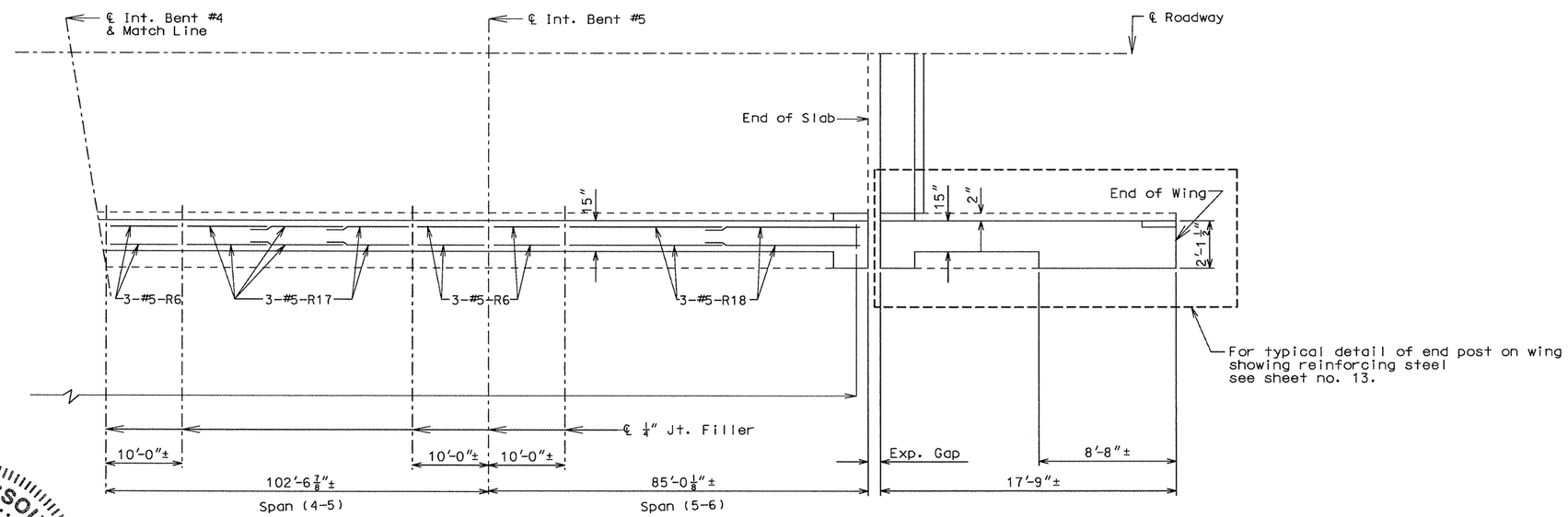

Note: Longitudinal dimensions shown are along ℄ parapet.
Match existing curb joints.
For details of reinforcing steel not shown, see sheet no. 8.
Use a minimum lap of 3'-0" for #5-R horizontal curb blockout bars.

PLAN OF RIGHT CURB BLOCKOUT SHOWING REINFORCING STEEL

FINAL PLANS

I CERTIFY THAT THIS PLAN SHEET ACCURATELY DEPICTS THE CONFIGURATION AND LOCATION OF THE ROADWAY AND ALL ITS APPURTENANT FEATURES, TO THE BEST OF MY KNOWLEDGE, AS I AND MY STAFF HAVE OBSERVED THE CONTRACTOR'S CONSTRUCTION OF THIS PROJECT. I SPECIFICALLY DISCLAIM ANY RESPONSIBILITY FOR THE DESIGN OF THIS PROJECT, EXCEPT AS I AND MY STAFF MAY HAVE MODIFIED OR AUTHORIZED THE MODIFICATION OF THE PROJECT DESIGN DURING ITS CONSTRUCTION; AND I DISCLAIM RESPONSIBILITY FOR THE CONTRACTOR'S ACTUAL CONSTRUCTION OF THE PROJECT, EXCEPT AS I AND MY STAFF MAY HAVE DIRECTED OR ORDERED THAT THE PROJECT BE CONSTRUCTED.

SIGNATURE 4/25/06 DATE

STATE OF MISSOURI
KIRSTEN MUNCK
NUMBER PE-2003001076
PROFESSIONAL ENGINEER

DETAILED MAR. 2002
CHECKED July 2002

NOTE: THIS DRAWING IS NOT TO SCALE. FOLLOW DIMENSIONS.

SHEET NO. 12 OF 15.

JACKSON COUNTY

A09922

STATE	PROJ. NO.	SHEET NO.
MO	J4I0712	B46
021115-407	I-435-1(277)	

FINAL PLANS

I CERTIFY THAT THIS PLAN SHEET ACCURATELY DEPICTS THE CONFIGURATION AND LOCATION OF THE ROADWAY AND ALL ITS APPURTENANT FEATURES, TO THE BEST OF MY KNOWLEDGE, AS I AND MY STAFF HAVE OBSERVED THE CONTRACTOR'S CONSTRUCTION OF THIS PROJECT. I SPECIFICALLY DISCLAIM ANY RESPONSIBILITY FOR THE DESIGN OF THIS PROJECT, EXCEPT AS I AND MY STAFF MAY HAVE MODIFIED OR AUTHORIZED THE MODIFICATION OF THE PROJECT DESIGN DURING ITS CONSTRUCTION; AND I DISCLAIM RESPONSIBILITY FOR THE CONTRACTOR'S ACTUAL CONSTRUCTION OF THE PROJECT, EXCEPT AS I AND MY STAFF MAY HAVE DIRECTED OR ORDERED THAT THE PROJECT BE CONSTRUCTED.

SIGNATURE DATE 4-25-05

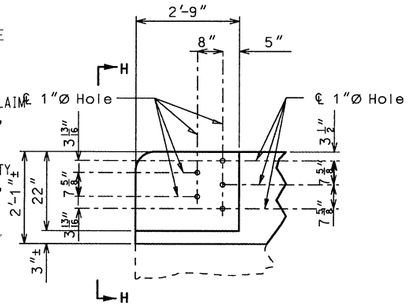

PART ELEVATION

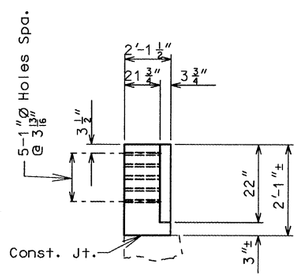

PART ELEVATION H-H

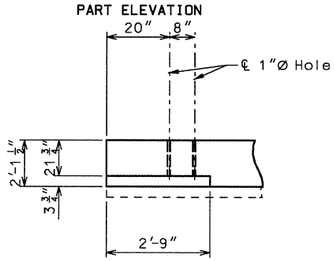

PART PLAN

DETAILS OF GUARD RAIL ATTACHMENT

(Except Bent No. 6 left wing - 1" Ø holes are not required.)

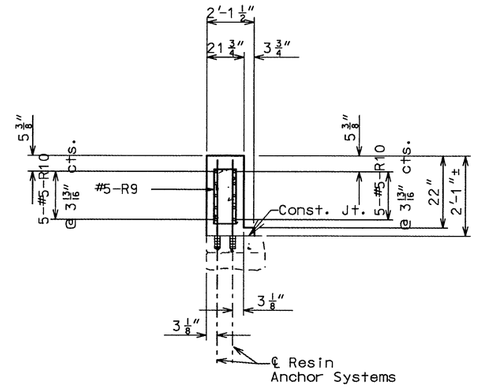

SECTION E-E

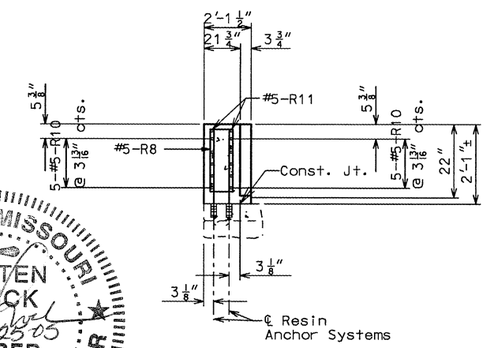

SECTION F-F

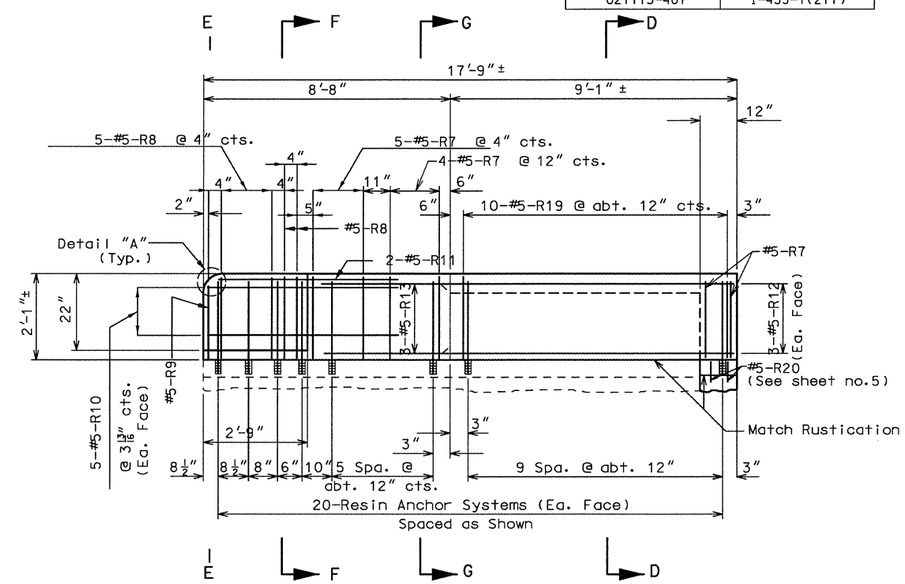

ELEVATION OF NEW END POST ON WING

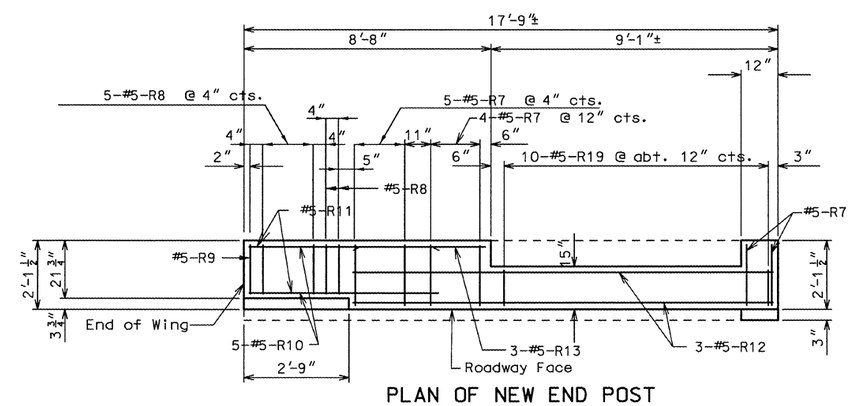

PLAN OF NEW END POST ON WING

Note: Resin anchors not shown in plan for clarity.

✱ As shown on sheet no.7 (Typ.)

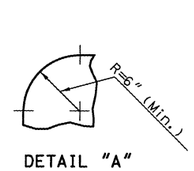

DETAIL "A"

STATE OF MISSOURI KIRSTEN MUNCK NUMBER PE-2003001076 PROFESSIONAL ENGINEER 4-25-05

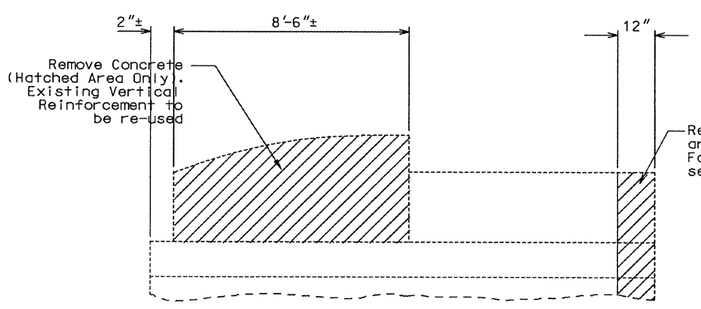

ELEVATION OF EXISTING END POST SHOWING CONCRETE REMOVAL

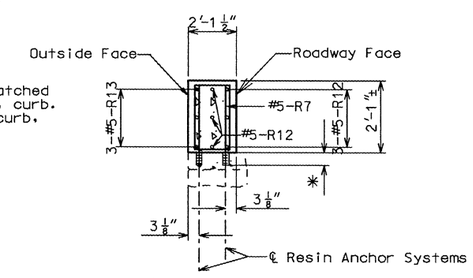

SECTION G-G

① Use alternating resin anchors in existing parapet & curb as shown on sheet no. 8.

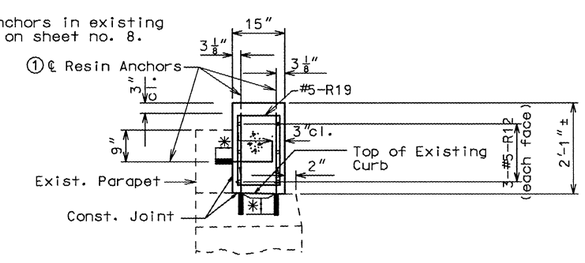

SECTION D-D

TYPICAL DETAILS OF END POST BLOCKOUT ON WINGS

DETAILED MAR. 2002
CHECKED July 2002

NOTE: THIS DRAWING IS NOT TO SCALE. FOLLOW DIMENSIONS.

SHEET NO. 13 OF 15

JACKSON COUNTY

A09922

State	Proj. No.	Sheet No.
MO	J4I0712	B47
021115-407	I-435-1(277)	

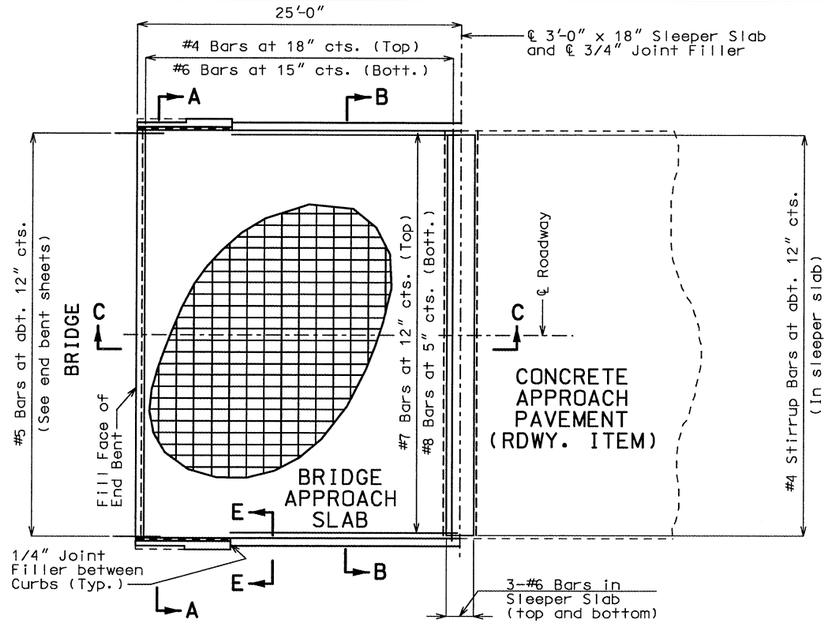

PART PLAN SHOWING REINFORCEMENT

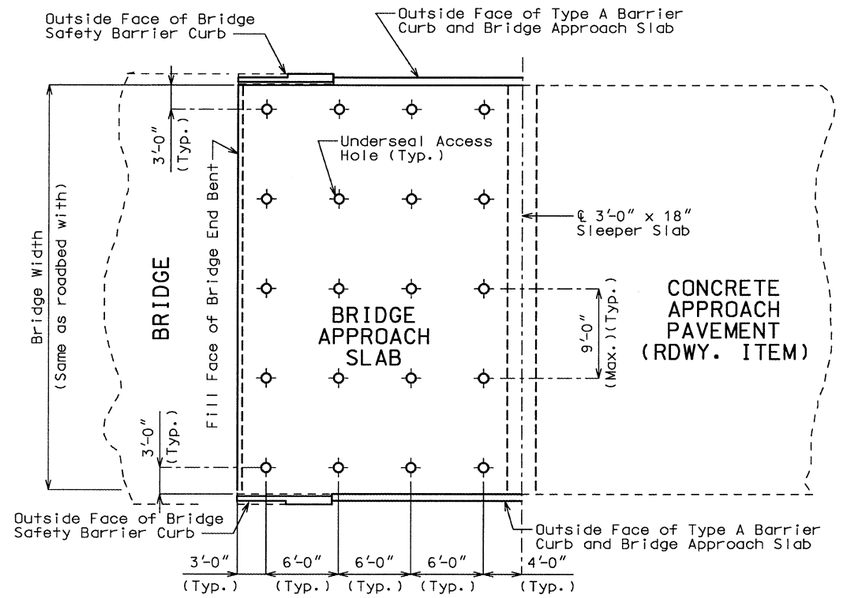

PART PLAN
(SHOWING TYPICAL UNDERSEAL ACCESS HOLE LOCATIONS)

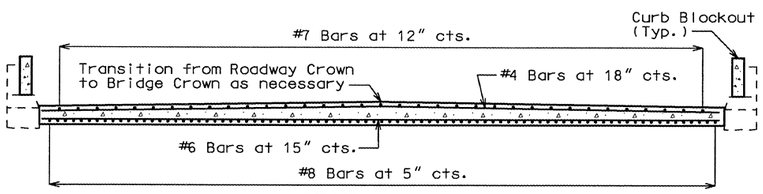

SECTION A-A

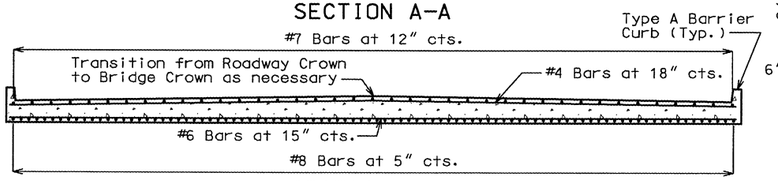

SECTION B-B

Note: With the approval of the Engineer, the contractor may crown the bottom of the approach slab to match the crown of the roadway surface.

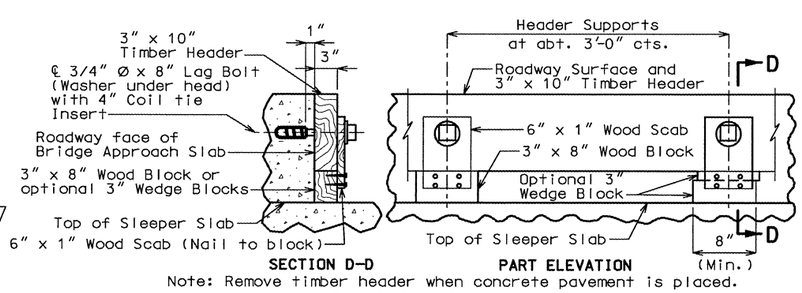

SECTION D-D PART ELEVATION

Note: Remove timber header when concrete pavement is placed.

DETAILS OF TIMBER HEADER

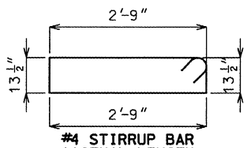

#4 STIRRUP BAR (ACTUAL LENGTH = 8'-3")

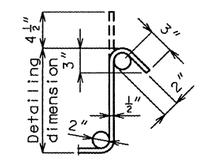

TYPICAL 135° STIRRUP HOOK DIMENSIONS BENDING DIAGRAM

Note:
Nominal lengths are based on out to out dimensions shown in bending diagram and are listed for fabricators use (nearest inch).

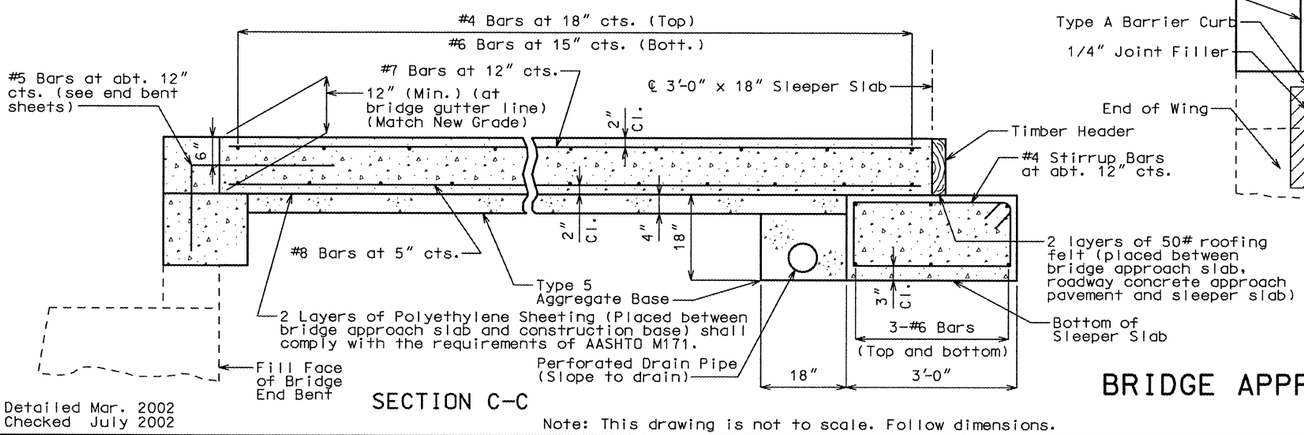

SECTION C-C

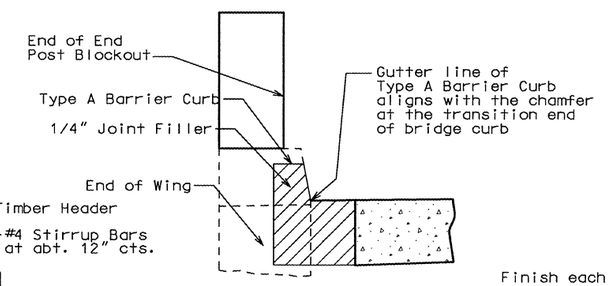

SECTION E-E
(BETWEEN CURBS)

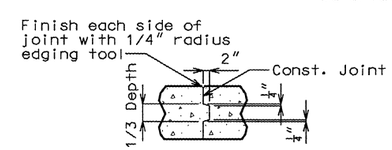

CONST. JOINT DETAIL
(IF REQUIRED)

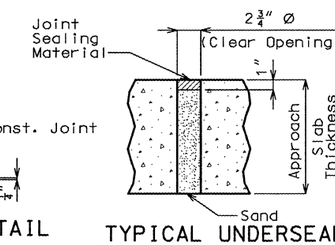

TYPICAL UNDERSEAL ACCESS HOLE DETAIL

BRIDGE APPROACH SLAB

GENERAL NOTES:

All concrete for the bridge approach slab and sleeper slab shall be in accordance with Section 503 (f'c = 4,000 psi) of the Missouri Standard Specifications.

All joint filler shall meet the requirements of Section 1057.2.5 of the Missouri Standard Specifications, except as noted.

The reinforcing steel in the bridge approach slab and the sleeper slab shall be epoxy coated Grade 60 with Fy = 60,000 psi.

Minimum clearance to reinforcing steel shall be 1-1/2", unless otherwise shown.

The reinforcing steel in the bridge approach slab and the sleeper slab shall be continuous. The transverse reinforcing steel may be made continuous by lap splicing the #4 & #6 bars 18" and 26" respectively.

Mechanical bar splices will be permitted and shall develop at least 125 percent of the specified yield strength of the reinforcing bars being spliced. The contractor shall furnish the Engineer the manufacturer's certification that this requirement is met and is required to follow the manufacturer's recommendation for installation.

Mechanical bar splices shall be epoxy coated in accordance with Section 710 of the Missouri Standard Specifications.

Hooks and bends shall be in accordance with the CRSI Manual of Standard Practice for Detailing Reinforced Concrete Structures, Stirrup and Tie Dimensions.

The contractor shall pour and satisfactorily finish the bridge slab before pouring the bridge approach slabs.

Longitudinal construction joints in approach slab and sleeper slab shall be aligned with longitudinal construction joints in bridge slab.

Payment for furnishing all materials, labor and excavation necessary to construct the approach slab, including the timber header, sleeper slab, underdrain, Type 5 aggregate base and all other appurtenances and incidental work as shown on this sheet, complete in place, shall be considered as completely covered under the contract unit price for Bridge Approach Slab (Bridge), per sq. yd.

For Concrete Approach Pavement details, see roadway plans.

See Missouri Standard Plans Drawing 609.00 for details of Type A Barrier Curb.

When a lap splice is required for the use of a mechanical bar splice, the minimum lap length shall be 40" for transverse approach slab bar splices.

At the contractor's option, Grade 40 reinforcement may be substituted for the Grade 60 #5 dowel bars connecting the bridge approach slab to the bridge abutment. No additional payment will be made for this substitution.

When Grade 40 reinforcement is substituted for the Grade 60 #5 dowel bars connecting the bridge approach slab to the bridge abutment, the reinforcement may be bent up to 90 degrees with a 2" minimum radius near the abutment to allow compaction of the backfill material near the abutment. Damage to epoxy coating shall be repaired according to Section 710.3.3 of the Missouri Standard Specifications.

Drain pipe may be either 6" diameter corrugated metallic-coated pipe underdrain, 4" diameter corrugated polyvinyl chloride (PVC) drain pipe, or 4" diameter corrugated polyethylene (PE) drain pipe.

I CERTIFY THAT THIS PLAN SHEET ACCURATELY DEPICTS THE CONFIGURATION AND LOCATION OF THE HIGHWAY AND ALL ITS APPURTENANCES TO THE BEST OF MY KNOWLEDGE, AS I AND MY STAFF HAVE OBSERVED THE CONTRACTOR'S CONSTRUCTION OF THE PROJECT. I SEEK NO AUTHORITY TO MAKE ANY RESPONSIBLE DESIGN DECISIONS ON BEHALF OF THE DESIGN OF THE PROJECT. EXCEPT AS NOTED, I AM NOT AUTHORIZED TO ACCEPT ANY DEVIATIONS FROM THE DESIGN OR SPECIFICATIONS DURING THE CONSTRUCTION OF THE PROJECT. EXCEPT AS NOTED, I AM NOT AUTHORIZED TO ACCEPT ANY MATERIALS OR PERFORM ANY WORK ON THE PROJECT. I FURTHER CERTIFY THAT THE PROJECT WAS CONSTRUCTED IN ACCORDANCE WITH THE PLANS, EXCEPT AS NOTED.

FINAL PLANS

SIGNATURE DATE

JACKSON COUNTY A09922

Detailed Mar. 2002
Checked July 2002

Note: This drawing is not to scale. Follow dimensions.

Sheet No. 14 of 15

BILL OF REINFORCING STEEL

NO. REQ'D.	MARK NO. (SIZE MARK)	LOCATION	EPOXY (E)	SHAPE NO.	STIRRUP (S)	SUBSTR. (X)	VARIES (V)	NO. EACH	B FT. IN.	C FT. IN.	D FT. IN.	E FT. IN.	F FT. IN.	H FT. IN.	K FT. IN.	NOMINAL LENGTH FT. IN.	ACTUAL LENGTH FT. IN.	WEIGHT LBS.
		SUPERSTR.																
		END BT. 1&6																
* 6	6 H1	BACKWALL	E	20					39 9.000							39 9	39 9	358
8	6 H2	BACKWALL	E	20					39 9.000							39 9	39 9	478
80	5 H3	BACKWALL	E	19					21.000	18.000						3 3	3 2	264
56	4 U1	BACKWALL	E	10	S					18.000	9.000					3 9	3 7	134
54	4 U2	BACKWALL	E	10	S					13.000	15.000					3 5	3 3	117
882	5 R3	BARRIER CURB	E	13	S				12.000	19.750	12.000	19.750				6 3	5 11	5443
12	5 R5	BARRIER CURB	E	20					7 9.000							7 9	7 9	97
84	5 R6	BARRIER CURB	E	20					9 9.000							9 9	9 9	854
44	5 R7	BARRIER CURB	E	13	S				22.500	22.000	22.500	22.000				8 4	8 0	367
28	5 R8	BARRIER CURB	E	13	S				18.750	22.000	18.750	22.000				7 9	7 5	217
4	5 R9	BARRIER CURB	E	13	S				18.750	17.000	18.750	17.000				6 11	6 7	27
40	5 R10	BARRIER CURB	E	20					6 0.000							6 0	6 0	250
8	5 R11	BARRIER CURB	E	20					5 9.000							5 9	5 9	48
* 26	5 R12	BARRIER CURB	E	20					14 9.000							14 9	14 9	400
12	5 R13	BARRIER CURB	E	20					8 5.000							8 5	8 5	105
24	5 R14	BARRIER CURB	E	20					29 11.000							29 11	29 11	749
24	5 R15	BARRIER CURB	E	20					31 5.000							31 5	31 5	786
36	5 R16	BARRIER CURB	E	20					31 1.000							31 1	31 1	1167
36	5 R17	BARRIER CURB	E	20					29 5.000							29 5	29 5	1105
24	5 R18	BARRIER CURB	E	20					38 10.000							38 10	38 10	972
40	5 R19	BARRIER CURB	E	13	S				12.000	20.500	12.000	20.500				6 4	6 0	250
8	5 R20	BARRIER CURB	E	10						18.000	2 1.500					5 2	4 11	41
		TOTALS																
	4		E															251
	5		E															13142
	6		E															836
		TOTAL																0
		TOTAL	E															14229
		Slab on Girder																
	4		E															251
	5		E															264
	6		E															836
		TOTAL																1351
		Safety Barrier Curb																
	5		E															12878
		TOTAL																12878

BILL OF REINFORCING STEEL

NO. REQ'D.	MARK NO. (SIZE MARK)	LOCATION	EPOXY (E)	SHAPE NO.	STIRRUP (S)	SUBSTR. (X)	VARIES (V)	NO. EACH	B FT. IN.	C FT. IN.	D FT. IN.	E FT. IN.	F FT. IN.	H FT. IN.	K FT. IN.	NOMINAL LENGTH FT. IN.	ACTUAL LENGTH FT. IN.	WEIGHT LBS.

State	Proj. No.	Sheet No.
MO	J4I0712	B48
021115-407	I-435-1(277)	

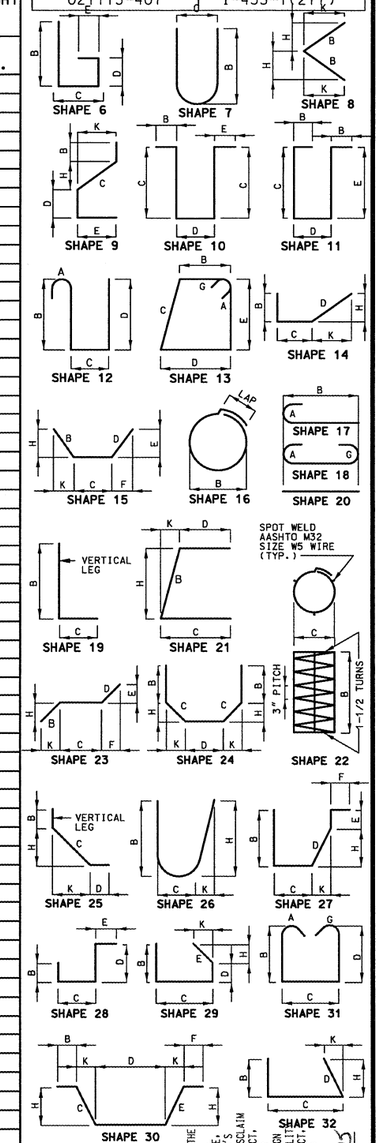

STATE OF MISSOURI
KIRSTEN MUNCK
NUMBER
PE 2003001076
PROFESSIONAL ENGINEER

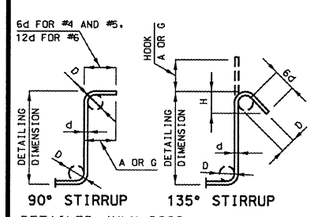

DETAILED JULY 2002
CHECKED JULY 2002

STIRRUP HOOK DIMENSIONS				
GRADES 40 - 50 - 60 KSI				
BAR SIZE	D (IN.)	90° HOOK	135° HOOK	
		HOOK A OR G	HOOK A OR G	APPROX. H
#4	2"	4-1/2"	4-1/2"	3"
#5	2-1/2"	6"	5-1/2"	3-3/4"
#6	4-1/2"	12"	8"	4-1/2"

NOTE: UNLESS OTHERWISE NOTED DIAMETER "D" IS THE SAME FOR ALL BENDS AND HOOKS ON A BAR.

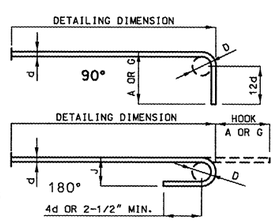

END HOOK DIMENSIONS				
BAR SIZE	D (IN.)	ALL GRADES		
		180° HOOKS		90° HOOKS
		A OR G	J	A OR G
#3	2-1/4"	5"	3"	6"
#4	3"	6"	4"	8"
#5	3-3/4"	7"	5"	10"
#6	4-1/2"	8"	6"	12"
#7	5-1/4"	10"	7"	14"
#8	6"	11"	8"	16"
#9	9-1/2"	15"	11-3/4"	19"
#10	10-3/4"	17"	13-1/4"	22"
#11	12"	19"	14-3/4"	2'-0"
#14	18-1/4"	2'-3"	21-3/4"	2'-7"

✳ TWO ADDITIONAL #6H1 & #5R12 ARE INCLUDED IN THE BAR BILL FOR TESTING.

NOTE:
ALL STANDARD HOOKS AND BENDS OTHER THAN 180 DEG. TO BE BENT WITH THE SAME PROCEDURE AS FOR 90 DEG. STD. HOOKS.
HOOKS AND BENDS SHALL BE IN ACCORDANCE WITH THE PROCEDURES AS SHOWN ON THIS SHEET.
E = EPOXY COATED REINFORCEMENT.
S = STIRRUP.
X = BAR IS INCLUDED IN SUBSTRUCTURE QUANTITIES.
V = BAR DIMENSIONS VARY IN EQUAL INCREMENTS BETWEEN DIMENSIONS SHOWN ON THIS LINE AND THE FOLLOWING LINE.
NO. EA. = NUMBER OF BARS OF EACH LENGTH.
NOMINAL LENGTHS ARE BASED ON OUT TO OUT DIMENSIONS SHOWN IN BENDING DIAGRAMS AND ARE LISTED FOR FABRICATOR'S USE (NEAREST INCH).
ACTUAL LENGTHS ARE MEASURED ALONG CENTERLINE BAR TO THE NEAREST INCH.
PAYWEIGHTS ARE BASED ON ACTUAL LENGTHS.
FOUR ANGLE OR CHANNEL SPACERS ARE REQUIRED FOR EACH COLUMN SPIRAL. SPACERS ARE TO BE PLACED ON INSIDE OF SPIRALS. LENGTH AND WEIGHT OF COLUMN SPIRALS DO NOT INCLUDE SPLICES OR SPACERS.
REINFORCING STEEL (GRADE 60) = FY 60,000 PSI.

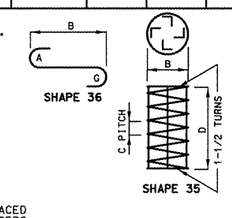

BENDING DIAGRAMS

FINAL PLANS

I CERTIFY THAT THIS PLAN SHEET ACCURATELY DEPICTS THE CONFIGURATION AND LOCATION OF THE ROADWAY AND ALL ITEMS PROPOSED TO BE CONSTRUCTED ON THE STATE HIGHWAY SYSTEM AS I AND MY STAFF HAVE OBSERVED THE CONTRACTOR'S CONSTRUCTION OF THIS PROJECT. I SPECIFICALLY DISCLAIM ANY RESPONSIBILITY FOR THE DESIGN OF THIS PROJECT, EXCEPT AS I AND MY STAFF MAY HAVE MODIFIED OR AUTHORIZED THE MODIFICATION OF THE PROJECT DESIGN DURING ITS CONSTRUCTION; AND I DISCLAIM RESPONSIBILITY FOR THE CONTRACTOR'S ACTUAL CONSTRUCTION OF THE PROJECT, EXCEPT AS I AND MY STAFF MAY HAVE DIRECTED OR ORDERED THAT THE PROJECT BE CONSTRUCTED.

4-25-05
DATE

SIGNATURE

NOTE: THIS DRAWING IS NOT TO SCALE. FOLLOW DIMENSIONS.

SHEET NO. 15 OF 15

JACKSON COUNTY

A09922