MISSOURI STATE HIGHWAY DEPARTMENT

FED. ROAD DIST. NO.	STATE	FEDERAL PROJECT NO. & SEC.	FISCAL YEAR	SHEET NO.	TOTAL SHEETS
5	MO			37	
DIST. NO.	COUNTY			ROUTE	SEC.
4	JACKSON				

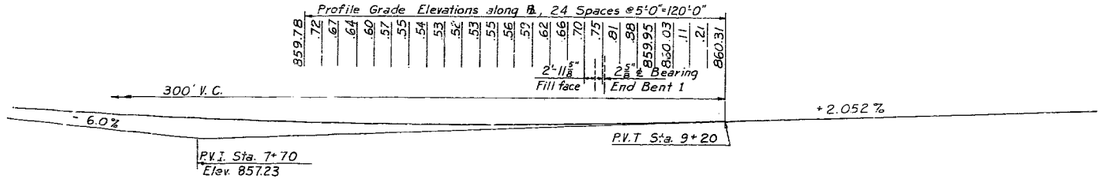

BENCH MARKS

B.M. No. 8
S.W. Cor. Flag Pole Foundation
in School Yard 221' Rt. Rte. I-70
Sta. 313+49. Elev. 854.31

B.M. No. 9
Nail in P.P. 270' Lt. Rte. I-70
Sta. 322+00. Elev. 870.89

PROFILE GRADE

75', 85', 85', 100', 75', 60' CONTINUOUS CONCRETE BOX GIRDER SPANS

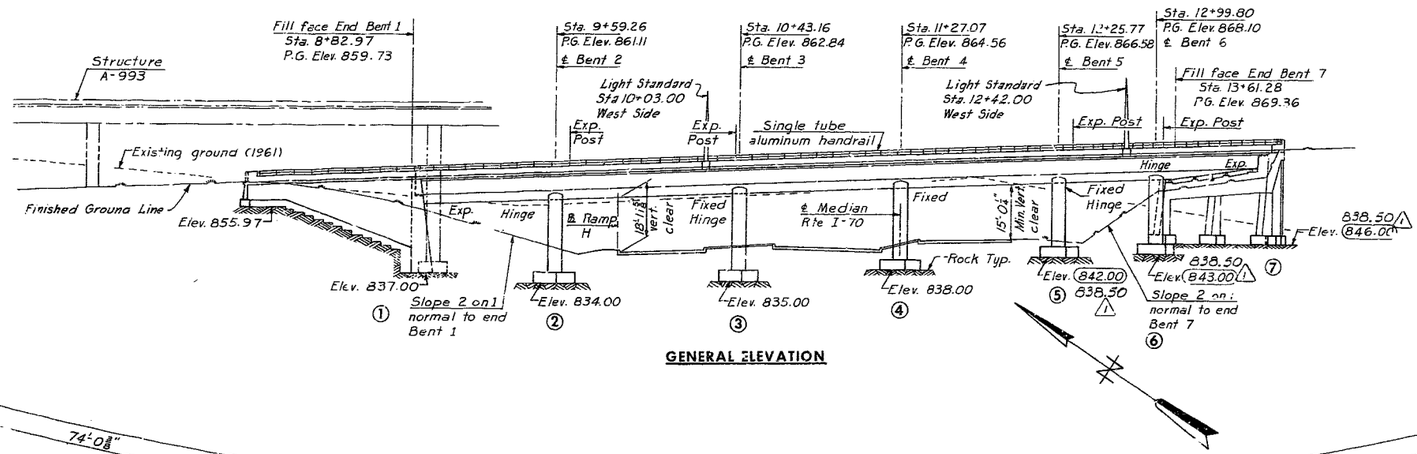

GENERAL ELEVATION

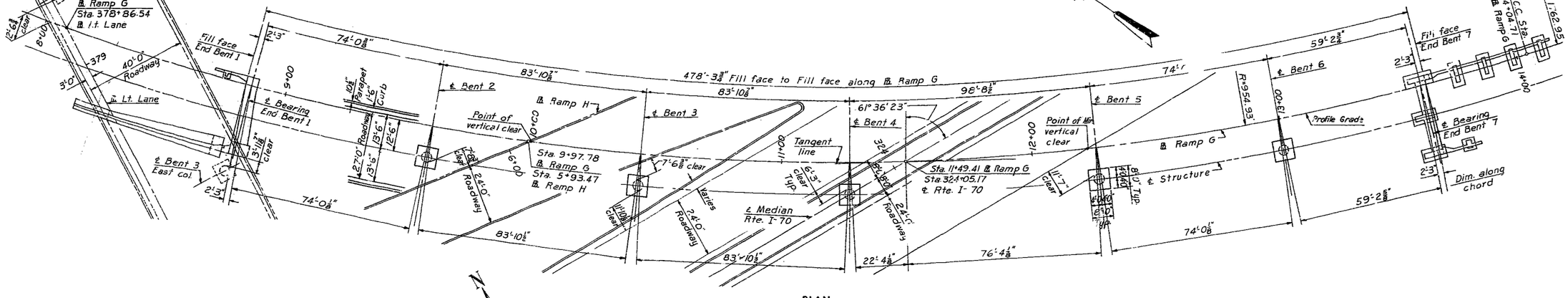

PLAN

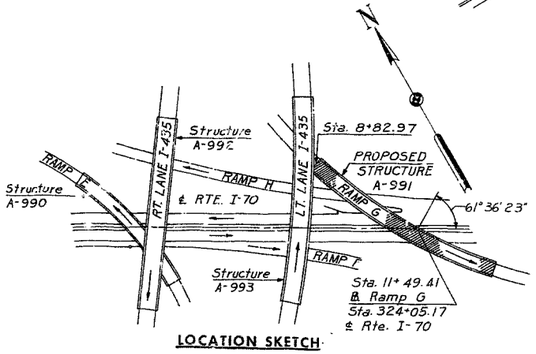

LOCATION SKETCH

CURVE DATA ℄ RAMP G

P.I. Sta. 9+32.01	P.I. Sta. 17+34.50
Δ 64° 32' 33.5"	Δ 21° 11' 28.5"
D 6°	D 3° 15"
T 603.01	T 329.79
L 1075.71	L 652.04
R 954.93	R 1762.95
SE .08'/ft.	SE .06'/ft.

Notes:

Bents cannot be located from the reference point on the tangent by conventional survey methods based on 100' chords.

All dimensions shown are horizontal.

Roadway excavation shall be completed adjacent to this site before substructure is started. See Special Provisions.

SUBMITTED BY:
L. L. Bergendoff
REGISTERED PROFESSIONAL ENGINEER
MISSOURI NO. E-253

BRIDGE: RAMP "G" OVER RTE. I-70 & RAMP "H"

STATE ROAD - ROUTES I-435 & I-70 INTERCHANGE
FROM ROUTE 40 TO LEEDS ROAD
PROJECT NO. I-435-1(24)(RTE. I-435) STA.11+49.41(℄ RAMP "G")

JACKSON COUNTY

SUBMITTED BY O B Jenkins BRIDGE ENGINEER DATE 7/23/62
APPROVED BY Jim Cobert CHIEF ENGINEER DATE 7/23/62

HOWARD, NEEDLES, TAMMEN & BERGENDOFF
CONSULTING ENGINEERS
KANSAS CITY NEW YORK

MADE LWL	DATE 2-21-62	TRACED	DATE
CHECKED JLW	DATE 3-21-62	SCALE	

NOTE: This drawing is not to scale. Follow dimensions.

△1 Rev. 4-22-63

SHEET 1 OF 19

STD. 54.00
A-991

291

MISSOURI STATE HIGHWAY DEPARTMENT

FED. ROAD DIV. NO.	STATE	FEDERAL PROJECT NO. & SEC.	FISCAL YEAR	SHEET NO.	TOTAL SHEETS
5	MO			38	
DIST. NO.	COUNTY			ROUTE	SEC
4	JACKSON				

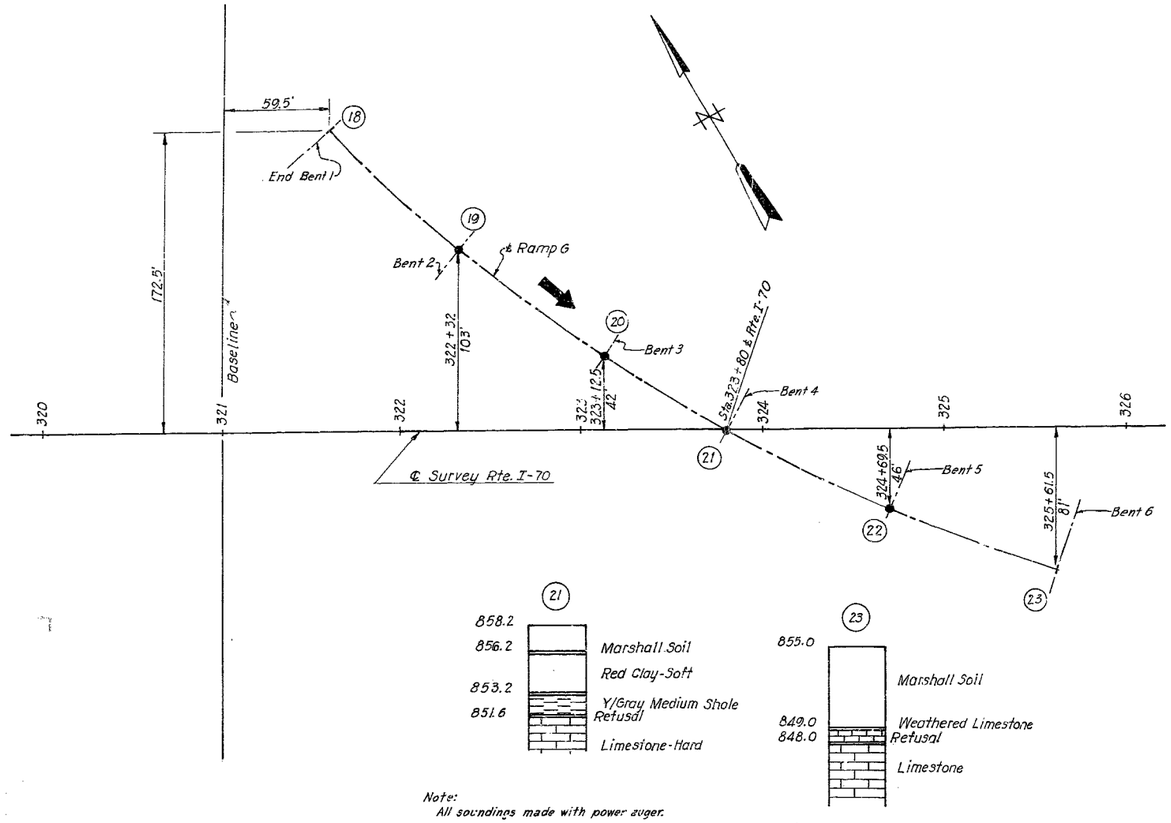

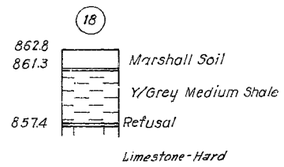

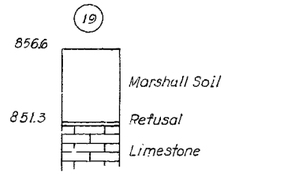

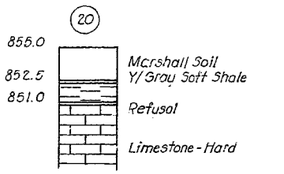

Note:
All soundings made with power auger.

LOG OF SOUNDINGS

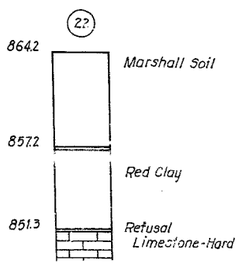

ESTIMATED QUANTITIES

ITEM	UNIT	SUBSTR.	SUPERSTR.	TOTAL	
Class 1 Excavation for Structures	Cu. Yd.	500	800 ⚠1	500	800 ⚠1
Class B Concrete	Cu. Yd.	332.7	370.6 ⚠1	332.7	370.6 ⚠1
Class B1 Concrete	Cu. Yd.		1,010.2	1,010.2	
Reinforcing Steel	Lbs.	39,930	464,350	504,330	512,850 ⚠1
Fabricated Structural Carbon Steel	Lbs.	48,500 ⚠1	5,970	5,970	
Bridge Rail (Single Tube Type)	Lin. Ft.		1,086	1,086	
Conduit System	L. S.			1	

GENERAL NOTES

Design Specifications

A.A.S.H.O. 1961.

Design Loading

H20-S16-44 with 15#/sq.ft. future wearing surface. (Modified 24,000# Tandem Axles.)

Concrete

Concrete Stress - Class B1 fc = 1,600 p.s.i.
Class B fc = 1,200 p.s.i.
Concrete for superstructure shall be Class B1 air-entrained. Concrete for substructure shall be Class B air-entrained.

Reinforcing Steel

Allowable stress 20,000 p.s.i. All splices in reinforcing steel shall be 32 bar diameters.
Bar sizes are designated on the plans by numbers. The first digit after the letter in three digit marks and the first two digits after the letter in four digit marks indicate the size of bar.
Dimensions shown on the plans from the reinforcing steel to outside edge of concrete are all clear dimensions.
All bending dimensions are from "out to out" of bars.

Joint Filler

Where joint filler is specified on the plans it shall conform with the requirements for gray sponge rubber compound joints as given in Section 157.2.4 of the Standard Specifications.

Metal Conduits

Expansion fitting shall be required in steel conduit at all expansion joints. Expansion fittings shall be O. Z. Electrical Manufacturing Company Type AX-125 with AJ bonding jumper or equal.

Sealing of Decks

Superstructure deck to be surface sealed. See Special Provisions.

Utilities

All utilities, unless shown otherwise, shall be removed or relocated by others. The Contractor will notify the owner of the utilities of his work schedule sufficiently in advance to allow time for the disposition of utilities.

Shipping

Permits must be obtained for all truck loads over legal length.

Excavation to Rock

All loose, shelly or disintegrated rock shall be removed and footings placed on hard, solid, undisturbed rock. If soft rock or shale is encountered, the footings shall be carried at least 18" into and cast against vertical faces of same. In no case shall the footings be placed higher than elevations shown. Bearing of 12 tons per sq.ft. was used in design of footings.

Plastic Waterstop

Plastic Waterstop shall be in accordance with Section 157.2.1 of the Standard Specifications.

Painting

Paint: Shop none, except as noted for bearings; Field, three coats of red lead for surfaces inaccessible after erection. All other exposed surfaces except as noted for bearings first coat red lead, second coat brown, third coat aluminum except that final coat on access doors and frames shall be gray. Payment for paint, cleaning and painting such surfaces shall be included in unit price bid for Fabricated Structural Carbon Steel.

Quantity Notes

Class 1 Excavation for Structures will be measured from the existing ground line or from the lower limits of roadway excavation, whichever is lower, regardless of the sequence of operations or method of removal.
All excavation for bridge will be paid for as Class 1 Excavation for Structures. Sketches show limits of excavation for pay purposes.
All concrete and reinforcement at intermediate bents above top of footing are included in superstructure quantities.
Estimated quantity of Class B concrete substructure includes all concrete in End Bents and intermediate bent footings. All other concrete is included in estimated quantity of Class B1 concrete.
Weight of bearings is included in weight of Fabricated Structural Carbon Steel.

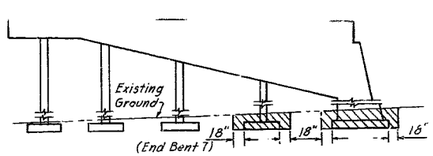

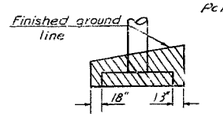

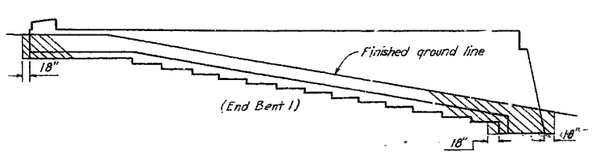

BRIDGE: RAMP "G" OVER RTE. I-70 & RAMP "H"

STATE ROAD - ROUTES I-435 & I-70 INTERCHANGE
FROM ROUTE 40 TO LEEDS ROAD
PROJECT NO. I-435-1(24)(RTE. I-435) STA. 11+49.41 (℄ RAMP "G")

JACKSON COUNTY

292

HOWARD, NEEDLES, TAMMEN & BERGENDOFF
CONSULTING ENGINEERS
KANSAS CITY NEW YORK

MADE JLW	DATE 3-6-62	TRACED	DATE
CHECKED LJR	DATE 3-9-62	SCALE	

NOTE: This drawing is not to scale. Follow dimensions.

⚠1 Rev. 4-22-63

SHEET 2 OF 19

A-991

MISSOURI STATE HIGHWAY DEPARTMENT

FED. ROAD DIV. NO.	STATE	FEDERAL PROJECT NO. & SEC.	FISCAL YEAR	SHEET NO.	TOTAL SHEETS
5	MO			39	
DIST. NO.	COUNTY			ROUTE	SEC.
4	JACKSON				

BILL OF REINFORCEMENT

NO.	MARK *	LENGTH	SHAPE	LOCATION
	SUBSTRUCTURE			
	END BENT 1			
8	F601	2'-8"	Str.	Footing
6	F602	10'-5"		Footing
4	H401	9'-0"		Maskwall
4	H402	8'-8"		Maskwall
7	H403	6'-7"		Counterfort
15	H501	4'-0"		Wingwall
13	H502	32'-5"	Str.	
2	H503	21'-0"	Str.	
2	H504	13'-0"		
2	H505	7'-9"		
2	H506	3'-6"		
19	H507	31'-8"		
2	H508	28'-6"		
2	H509	23'-3"		
2	H510	17'-6"		
2	H511	12'-3"		
2	H512	6'-3"		
2	H513	32'-10"	Str.	
5	H514	24'-0"		
4	H515	16'-3"	Str.	Wingwall
4	H516	8'-2"		End Post
4	H517	6'-6"		End Post
4	H518	3'-8"	Str.	Beam
1	H601	17'-8"		Beam
1	H602	17'-4"		
1	H603	17'-0"		
1	H604	16'-8"		
1	H605	16'-3"		
1	H606	12'-9"		
1	H607	12'-5"		
1	H608	12'-0"		
1	H609	11'-8"		
1	H610	11'-3"		
1	H611	10'-11"		
1	H612	10'-6"		
1	H613	10'-2"		
2	H614	7'-7"		
2	H615	9'-4"		
5	H616	5'-0"	Str.	
8	H617	6'-6"		
3	H618	5'-1"		Beam
34	H619	3'-8"	Str.	Beam and Wingwall
16	H620	4'-8"	Str.	Beam and Wingwall
7	H621	6'-4"		Beam and Wingwall
3	H622	10'-0"		Beam
6	H623	14'-0"		
2	H624	17'-3"		
2	H625	21'-0"		
2	H626	24'-6"		
3	H627	19'-0"		Beam
14	H628	31'-6"		Beam and Backwall
1	H629	10'-8"		Beam
3	H630	6'-10"	Str.	Beam and Wingwall
11	H631	7'-1"		Beam
2	H632	7'-3"		Beam
4	H633	27'-6"	Str.	Beam
6	H634	16'-5"		Wingwall
1	H635	13'-6"		
2	H636	15'-3"		
5	H637	8'-0"		
2	H638	7'-6"		
1	H639	9'-6"	Str.	Wingwall

BILL OF REINFORCEMENT

NO.	MARK *	LENGTH	SHAPE	LOCATION
15	H640	8'-4"		Wingwall
23	H641	11'-3"	Str.	
23	H642	9'-2"		
18	H643	15'-0"		
13	H644	42'-0"	Str.	Wingwall
5	H645	19'-4"		Beam
1	H646	10'-9"		Beam
8	V401	6'-3"	Str.	Maskwall
69	V402	5'-11"		Wingwall & Beam
38	V501	7'-2"	Str.	Backwall
6	V502	3'-1"		Wingwall
2	V503	3'-4"		
2	V504	4'-0"		
2	V505	4'-8"		
2	V506	5'-6"		
2	V507	6'-3"		
3	V508	7'-0"		
2	V509	7'-8"	Str.	Wingwall
18	V510	9'-7"		End Post
59	V511	7'-6"		Wingwall
15	V512	6'-1"	Str.	
9	V513	17'-3"		
16	V514	26'-10"		
2	V515	17'-9"		
2	V516	14'-2"		
32	V517	4'-0"	Str.	Wingwall
3	V601	7'-1"	Str.	Beam
7	V602	25'-2"		
1	V603	31'-2"		
2	V604	19'-1"		
1	V605	13'-0"		
1	V606	6'-9"	Str.	
4	V607	22'-2"		
2	V608	21'-0"		
2	V609	13'-2"	Str.	
2	V610	12'-6"		
2	V611	11'-8"		
2	V612	11'-0"		
2	V613	10'-2"		
2	V614	9'-6"		
2	V615	7'-10"		
2	V616	7'-4"		
2	V617	6'-8"		
2	V618	5'-10"	Str.	
1	V619	20'-3"		
1	V620	15'-9"		
5	V621	18'-0"		Beam
15	V622	7'-0"		Wingwall
9	V623	19'-1"		
16	V624	26'-10"	Str.	
10	V625	15'-7"		
32	V626	5'-0"		
6	V627	17'-2"		Wingwall

BILL OF REINFORCEMENT

NO.	MARK *	LENGTH	SHAPE	LOCATION
	SUBSTRUCTURE			
	END BENT 7			
62 (43)	F6101	4'-3"	Str.	Footing
2	F6102	5'-9"	Str.	Footing
5	F8101	11'-0"	Str.	Footing
19 (10)	F8102	9'-0"	Str.	
104 (88)	F8103	4'-6"	Str.	
8	F8104	6'-3"		
32	F8105	9'-6"	Str.	Footing
37 (42)	F10101	7'-3"		Footing
54	V4101	5'-11"		Wingwall
19	H4102	9'-11"		Counterfort
3	H4103	8'-8"		Counterfort
38	V5101	7'-1"	Str.	Backwall
5	V5102	5'-8"		Maskwall
5	V5103	5'-10"		Maskwall
4	V5104	4'-2"		Wingwall
2	V5105	4'-10"		
4	V5106	5'-8"		
2	V5107	6'-4"		
2	V5108	7'-2"		
2	V5109	7'-10"		
4	V5110	8'-5"		
18	V5111	3'-0"	Str.	Wingwall
18	V5112	9'-7"		End Post
50	V5113	7'-6"		Wingwall
5	V5114	9'-0"	Str.	
28	V5115	12'-2"		
3	V5116	2'-3"		
3	V5117	11'-0"	Str.	Wingwall
2	H5101	6'-9"		Maskwall
2	H5102	7'-5"		
2	H5103	8'-1"		
1	H5104	8'-9"		Maskwall
4	H5105	16'-3"	Str.	Wingwall
4	H5106	2'-2"		
4	H5107	40'-0"		
4	H5108	12'-4"	Str.	Wingwall
32	H5109	7'-11"		Counterfort
4	H5110	8' 2"	Str.	End Post
4	H5111	6 -6"	Str.	End Post
20	V6101	15'-9"		Beam
8	V6102	14'-3"		Beam
4	V6103	15'-8"	Str.	Pedestal
2	V6104	11'-6"		
2	V5105	5'-3"		
4	V6106	13'-2"		
2	V6107	12'-0"		
2	V6108	6'-0"		
1	V6109	14'-0"		
1	V6110	11'-10"		
12	V6111	14'-3"		
2	V6112	9'-8"		
8	V6113	12'-6"		
16 (8)	V6114	6'-6"	Str.	Pedestal

BILL OF REINFORCEMENT

NO.	MARK *	LENGTH	SHAPE	LOCATION
	SUBSTRUCTURE			
	END BENT 7 (Cont'd)			
8	H6101	31'-5"	Str.	Backwall
6	H6102	31'-3"		Beam
4	H6103	14'-0"		Beam
3	H6104	16'-5"		Wingwall
3	H6105	17'-6"		
2	H6106	13'-6"		
1	H6107	9'-6"		
1	H6108	8'-9"		
1	H6109	4'-9"		
1	H6110	5'-9"		
2	H6111	14'-3"	Str.	
5	H6112	8'-3"		Wingwall
2	H6113	13'-1"		Pedestal
2	H6114	13'-10"		
2	H6115	14'-7"		
2	H6116	15'-4"		
2	H6117	16'-1"		
2	H6118	16'-10"		
2	H6119	17'-7"		
2	H6120	18'-4"		
2	H6121	19'-1"		
2 (1)	H6122	19'-10"		Pedestal
7	H6123	6'-2"		Wingwall
14	H6124	4'-2"		
3	H6125	2'-2"	Str.	
4	H6126	3'-3"	Str.	Wingwall
14 (9)	H6127	12'-1"		Pedestal
1	H6128	11'-10"		
1	H6129	12'-7"		
1	H6130	13'-4"		
1	H6131	14'-1"		
1	H6132	14'-10"		
1	H6133	15'-7"		
1	H6134	16'-4"		
1	H6135	17'-1"		Pedestal
7	H6136	7'-10"		Wingwall
2	H6137	43'-6"	Str.	
7	H6138	40'-0"		
7	H6139	12'-10"		
2	H6140	30'-4"		
2	H6141	20'-9"		
2	H6142	11'-9"	Str.	Wingwall
4	H6143	9'-8"		Pedestal
4	H6144	10'-5"		
4	H6145	11'-2"		
4	H6146	11'-11"		
4	H6147	12'-8"		
4	H6148	13'-5"		
4	H6149	14'-2"		
4	H6150	14'-11"		
4	H6151	15'-8"		
4	H6152	16'-5"		Pedestal
6	V8101	23'-1"		Counterfort
2	V8102	23'-0"	Str.	
8	V8103	13'-6"		
8	V8104	12'-2"		
8	V8105	11'-0"		
8	V8106	10'-9"	Str.	Counterfort

BILL OF REINFORCEMENT

NO.	MARK *	LENGTH	SHAPE	LOCATION
	SUBSTRUCTURE			
	END BENT 7 (Cont'd)			
3	V10101	17'-0"	Str.	Pedestal
3	V10102	17'-6"		
3	V10103	14'-10"		
3	V10104	11'-10"		
6	V10105	15'-8"		
12	V10106	14'-8"		
12	V10107	14'-3"	Str.	Pedestal
6	H10101	12'-0"	Str	Beam
5	H10102	31'-3"	St.	Beam
	SUBSTRUCTURE			
	INT. BENT 2			
32	F1121	7'-8"	Str.	Footing
10	F1421	10'-3"		Footing
	INT. BENT 3			
32	F1131	7'-8"	Str.	Footing
10	F1431	10'-0"		Footing
	INT. BENT 4			
32	F1141	7'-8"	Str.	Footing
18	F1441	9'-9"		Footing
	INT. BENT 5			
32	F1151	7'-8"	Str.	Footing
10	F1451	10'-0"		Footing
	INT. BENT 6			
32	F1161	7'-8"	Str.	Footing
10	F1461	10'-3"		Footing

Note Hooks and bends shall be in accordance with ACI Manual of Standard Practice for Detailing Reinforced Concrete Structures. (ACI-315-57)

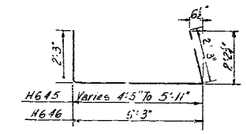

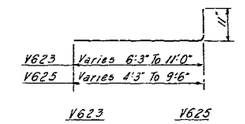

BENDING DIAGRAMS

Note: For bending diagrams not shown see sheet 4.

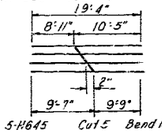

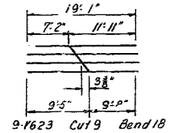

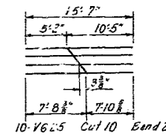

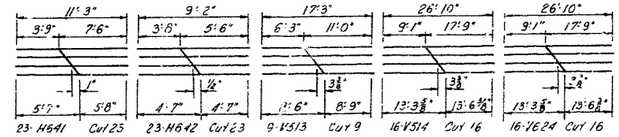

⚠ Note: For additional bars required for End Bent 7, see Sheet 3 of 3, A-991A

CUTTING DIAGRAMS

BRIDGE: RAMP "G" OVER RTE. I-70 & RAMP "H"

STATE ROAD - ROUTES I-435 & I-70 INTERCHANGE
FROM ROUTE 40 TO LEEDS ROAD
PROJECT NO. I-435-1(24)(RTE. I-435) STA. 11+49.41 (℄ RAMP "G")

JACKSON COUNTY

HOWARD, NEEDLES, TAMMEN & BERGENDOFF
CONSULTING ENGINEERS
KANSAS CITY NEW YORK

MADE IJR& GLC	DATE 3-17-62	TRACED	DATE
CHECKED SAL	DATE 3-18-62	SCALE	

* The first digit after the letter in the three and four digit marks in End Bents 1 and 7 indicate the size of bar. The first digit after the letter in the three digit marks and the first two digits after the letter in the four digit marks in the Interior Bents indicate the size of bar.

NOTE: This drawing is not to scale. Follow dimensions.

⚠ Rev. 4-22-63

SHEET 3 OF 19

A-991

293

MISSOURI STATE HIGHWAY DEPARTMENT

FED. ROAD DIV. NO.	STATE	FEDERAL PROJECT NO. & SEC.	FISCAL YEAR	SHEET NO.	TOTAL SHEETS
5	MO			40	
DIST. NO.	COUNTY		ROUTE	SEC.	
4	JACKSON				

BILL OF REINFORCEMENT

NO.	MARK	LENGTH	SHAPE	LOCATION
		SUPERSTRUCTURE		
144	D501	10'-6"		Diaphragm
8	D502	11'-8"		Special Diaph.
64	D601	24'-8"	Str.	End & Int. Diaph.
44	D602	12'-3"		End Diaph.
8	D603	15'-1"		End Diaph.
8	D604	9'-9"		Spec. Diaph.
4	D605	31'-5"	Str.	End Diaph.
256	G401	30'-0"	Str.	All Girders
4	2	16'-6"	Str.	Girder A
4	3	21'-0"	Str.	" B & D
4	4	25'-0"	Str.	" C
4	G405	29'-0"	Str.	Girder D
540	G501	7'-7"		Girder A
1631	2	7'-7"		" A,B,C
1643	3	7'-7"		" B,C,D
552	G504	7'-7"		Girder D
64	G801	60'-0"	Str.	All Girders
2	2	16'-6"	Str.	Girder A
2	3	21'-0"	Str.	" B
2	4	25'-0"	Str.	" C
2	G805	29'-0"	Str.	Girder D
458	P401	6'-9"		Parapet See Bending Diagrams
495	P402	6'-1"		Parapet
16	P403	5'-11"		Parapet
		5'-4"		
8	P501	33'-4"	Str.	Parapet
16	P502	32'-6"		
24	P503	4'-2"		
48	P504	9'-8"		
8	P505	40'-0"		
20	P506	28'-3"		
8	P507	7'-2"		
8	P508	27'-0"		
8	P509	34'-6"		
16	P510	34'-0"		
8	P511	23'-4"		
8	P512	28'-0"	Str.	Parapet
2	P513	6'-6"		Lt. Std. Support
2	P514	6'-3"		
2	P515	6'-0"		
6	P516	7'-8"		
4	P517	2'-4"	Str.	
2	P518	5'-9"		Lt. Std. Support
561	S501	40'-0"	Str.	Bot. of Top Slab
51	S502	19'-9"		Bot. of Top Slab
546	S503	24'-6"		Bottom Slab
51	S504	7'-9"		Bot. of Top Slab
51	S505	10'-6"		
51	S506	11'-2"		
51	S507	16'-0"	Str.	Bot. of Top Slab

BILL OF REINFORCEMENT

NO.	MARK	LENGTH	SHAPE	LOCATION
913	S601	31'-5"	Str.	Top of top slab
907	S602	28'-6"	Str.	Bot. " "
48	S603	5'-9"	Str.	Bot. slab
38	S901	19'-0"	Str.	Top of top slab
114	2	60'-0"		
76	3	31'-5"		
76	4	34'-3"		
38	5	18'-0"		
38	6	24'-3"		
37	7	24'-0"		
76	8	26'-5"		Top of top slab
30	9	49'-3"		Bot. slab
30	10	45'-3"		
30	11	50'-9"		
30	12	32'-0"		
30	13	60'-0"		
29	14	45'-0"		
30	15	30'-0"	Str.	Bot. slab
38	16	11'-6"	Str.	Top of top slab
38	S917	8'-0"	Str.	Top of top slab
36	S1001	16'-0"	Str.	Top of top slab
36	2	24'-0"		
18	3	18'-0"		
19	4	32'-0"		Top of top slab
30	5	47'-0"		Bot. slab
29	6	57'-0"		
30	7	41'-0"		
29	8	53'-0"		
29	9	43'-0"		
30	S1010	45'-6"	Str.	Bot. slab
19	S1101	36'-0"	Str.	Top of top slab
38	2	24'-0"		
19	3	40'-0"		
38	4	30'-0"		
38	5	26'-0"		
19	6	38'-0"		Top of top slab
30	7	58'-6"		Bot. slab
45	8	60'-0"		
14	9	41'-0"		
30	S1110	8'-0"	Str.	Bot. slab
18	S1401	20'-0"	Str.	Top of top slab
15	2	19'-0"		Bot. slab
15	3	60'-0"		" "
14	SM04	50'-0"	Str.	Bot. slab
12	W401	17'-6"	Str.	E & W Cu. b
96	2	30'-0"		" " "
4	3	12'-6"		East Curb
12	4	16'-6"		" "
4	5	15'-6"	Str.	West "
458	6	6'-3"		East "
16	7	2'-0"	Str.	" "
495	8	5'-10"		West "
8	9	26'-6"	Str.	East "
4	10	20'-0"		West "
8	11	29'-0"		" "
4	W412	18'-9"	Str.	West "

BILL OF REINFORCEMENT

NO.	MARK	LENGTH	SHAPE	LOCATION
		SUPERSTRUCTURE		
		INT. BENT 2		
14	B521	3'-6"	Str.	Beam
6	B621	24'-8"	Str.	
62	B622	12'-8"		
14	B1421	27'-7"	Str.	
8	B1422	24'-8"	"	
16	B1423	15'-0"	Str.	Beam
1	C421	790'-9"		Column
20	C1421	20'-4"	Str.	Column
10	C1422	10'-1"		Column
		INT. BENT 3		
14	B531	3'-6"	Str.	Beam
6	B631	24'-8"	Str.	
62	B632	12'-8"		
14	B1431	27'-7"	Str.	
8	B1432	24'-8"	"	
16	B1433	15'-0"	Str.	Beam
1	C431	817'-6"		Column
20	C1431	26'-4"		Column
		INT. BENT 4		
14	B541	3'-6"	Str.	Beam
6	B641	24'-8"	Str.	
70	B642	12'-9"		
15	B1441	27'-7"	Str.	
7	B1442	24'-8"	"	
18	B1443	15'-0"	Str.	Beam
1	C441	912'-0"		Column
18	C1441	25'-0"		Column
		INT. BENT 5		
14	B551	3'-6"	Str.	Beam
6	B651	24'-8"	Str.	
62	B652	12'-8"		
14	B1451	27'-7"	Str.	
8	B1452	24'-8"	"	
16	B1453	15'-0"	Str.	Beam
1	C451	696'-10"		Column
20	C1451	23'-1"		Column
1	C452	155'-5"		Column
20	C1452	8'-2"	Str.	Column
		INT. BENT 6		
14	B561	3'-6"	Str.	Beam
6	B661	24'-8"	Str.	
50	B662	12'-4"		
8	B1461	27'-7"	Str.	
14	B1462	24'-8"	Str.	Beam
1	C461	716'-2"		Column
20	C1461	18'-5"	Str.	Column
10	C1462	10'-1"		Column
1	C462	192'-7"		Column
20	C1463	9'-2"	Str.	Column

Note
Hooks and bends shall be in accordance with ACI Manual of Standard Practice for Detailing Reinforced Concrete Structures. (ACI-315-57)

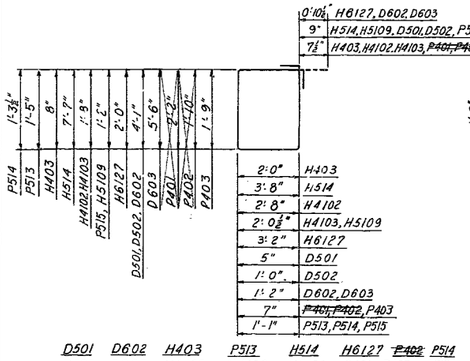

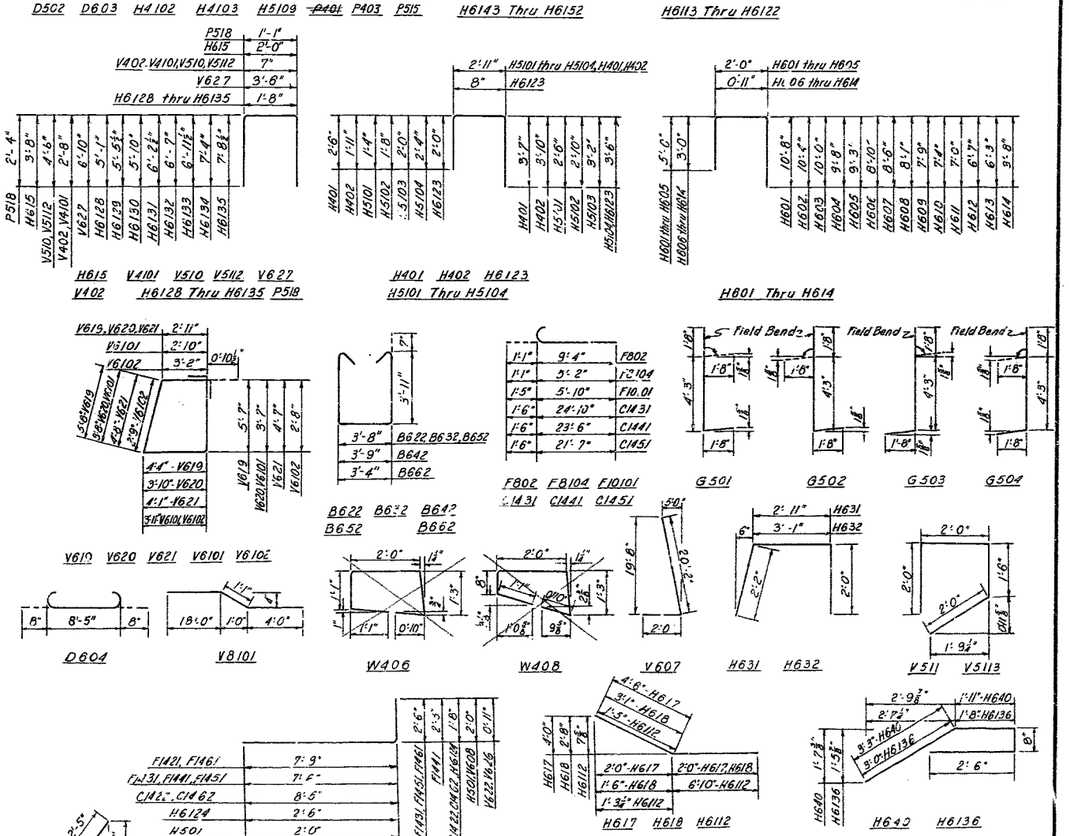

BRIDGE: RAMP "G" OVER RTE. I-70 & RAMP "H"

STATE ROAD - ROUTES I-435 & I-70 INTERCHANGE
FROM ROUTE 40 TO LEEDS ROAD
PROJECT NO. I-435-1(24)(RTE. I-435) STA. 11+49.41 (℄ RAMP "G")

JACKSON COUNTY

SHEET 4 OF 19 Rev. 4-22-63

A-991

HOWARD, NEEDLES, TAMMEN & BERGENDOFF
CONSULTING ENGINEERS
KANSAS CITY NEW YORK

MADE LWL SHT	DATE 3-14-62	TRACED	DATE
CHECKED LJR	DATE 3-16-62	SCALE	

294

CONSTRUCTION CHANGES NOTED HEREON

MISSOURI STATE HIGHWAY DEPARTMENT

FED. ROAD DIV. NO.	STATE	FEDERAL PROJECT NO. & SEC.	FISCAL YEAR	SHEET NO.	TOTAL SHEETS
5	MO			41	
DIST. NO.	COUNTY		SOUTH	SEC.	
4	JACKSON				

ELEVATION

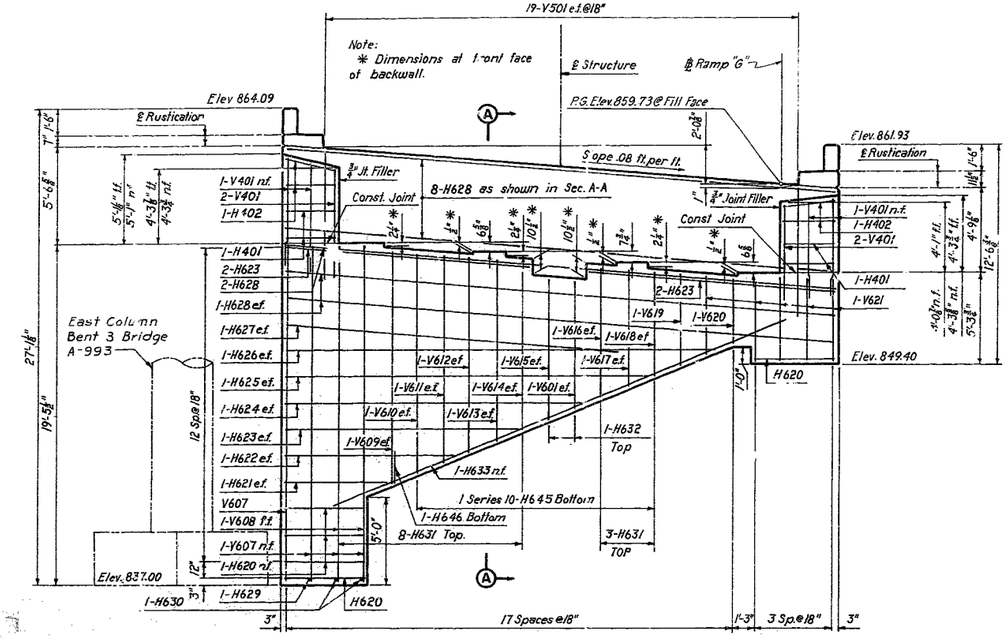

PLAN

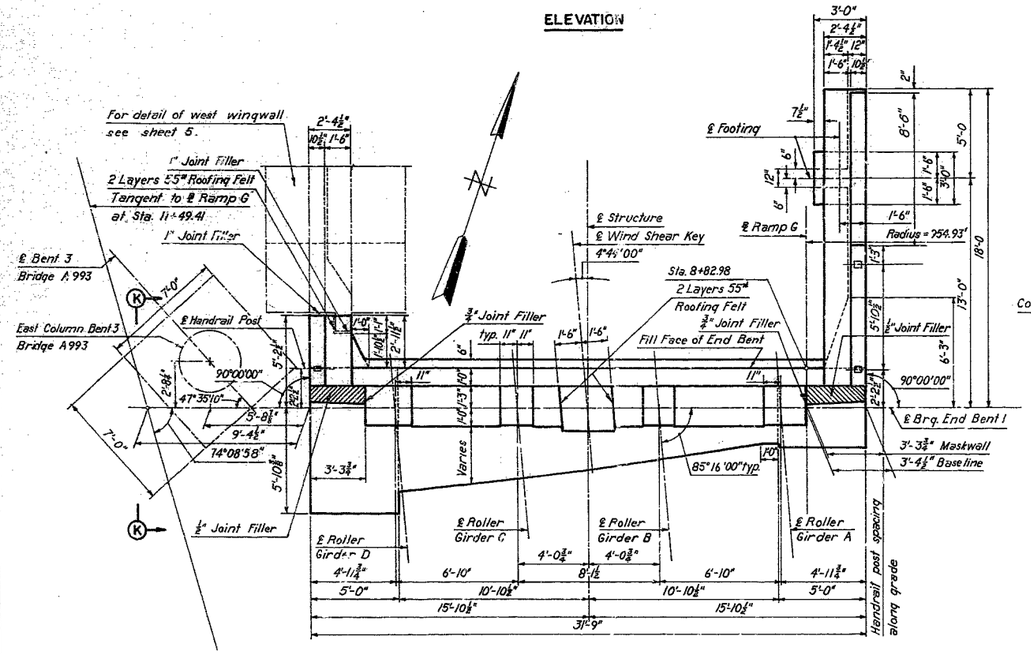

ELEVATION K-K

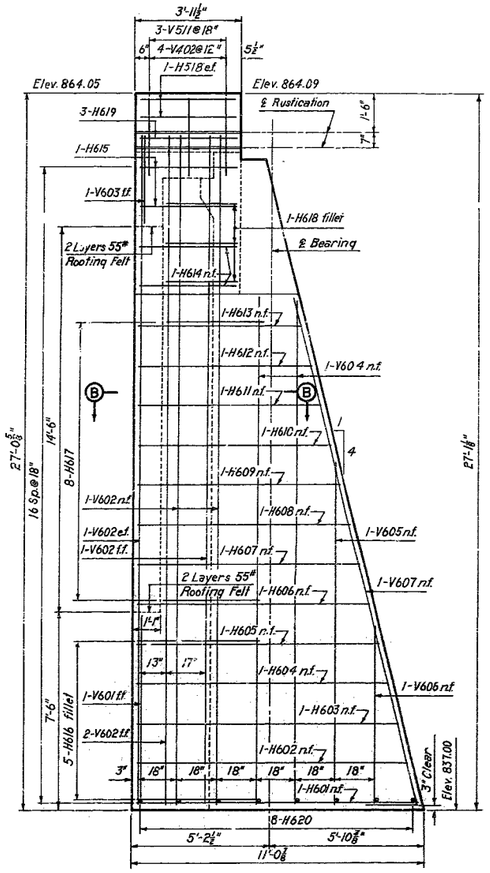

ELEVATION K-K

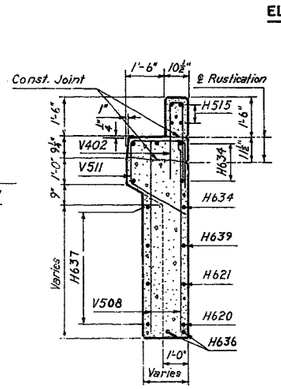

SECTION C-C

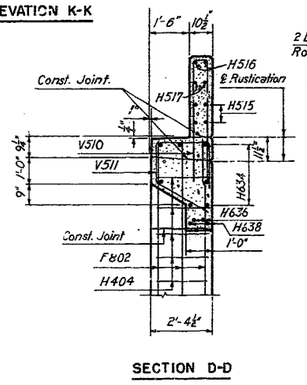

SECTION D-D

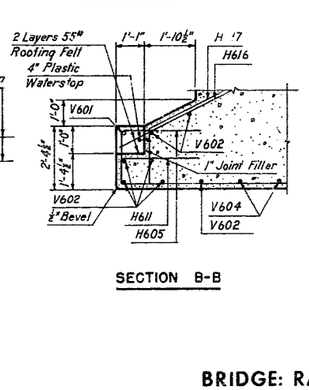

SECTION B-B

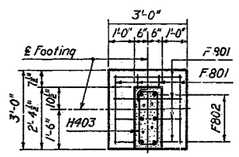

SECTION E-E

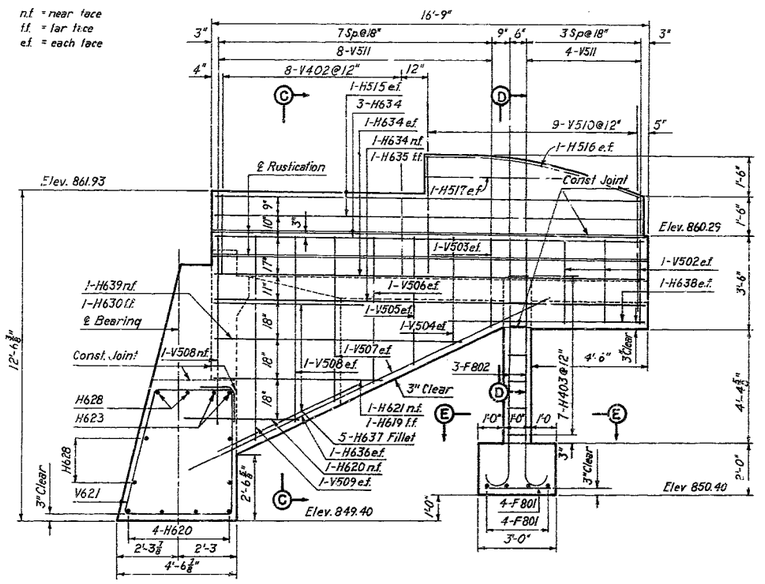

EAST WINGWALL ELEVATION

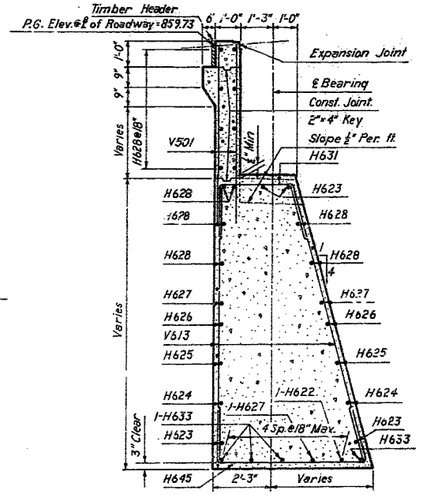

SECTION A-A

Note:
Dimensions to surfaces receiving joint filler are to face of concrete.

BRIDGE: RAMP "G" OVER RTE. I-70 & RAMP "H"

STATE ROAD - ROUTES I-435 & I-70 INTERCHANGE
FROM ROUTE 40 TO LEEDS ROAD
PROJECT NO. I-435-1(24)(RTE. I-435) STA. 11+49.41 (℄ RAMP "G")

JACKSON COUNTY

A-991

HOWARD, NEEDLES, TAMMEN & BERGENDOFF
CONSULTING ENGINEERS
KANSAS CITY NEW YORK

MADE L.J.R.	DATE 2-19-62	TRACED	DATE
CHECKED S.A.L.	DATE 3-6-62	SCALE	

NOTE: This drawing is not to scale. Follow dimensions.

DETAILS END BENT 1

SHEET 5 OF 19

295

SEE FINAL PLANS FOR FINISHED LINES

MISSOURI STATE HIGHWAY DEPARTMENT

FED. ROAD DIV. NO.	STATE	FEDERAL PROJECT NO. & SEC.	FISCAL YEAR	SHEET NO.	TOTAL SHEETS
5	MO			42	
DIST. NO.	COUNTY		ROUTE	SEC.	
4	JACKSON				

Note:
Cost of coarse aggregate shall be included in price bid for other items of work.

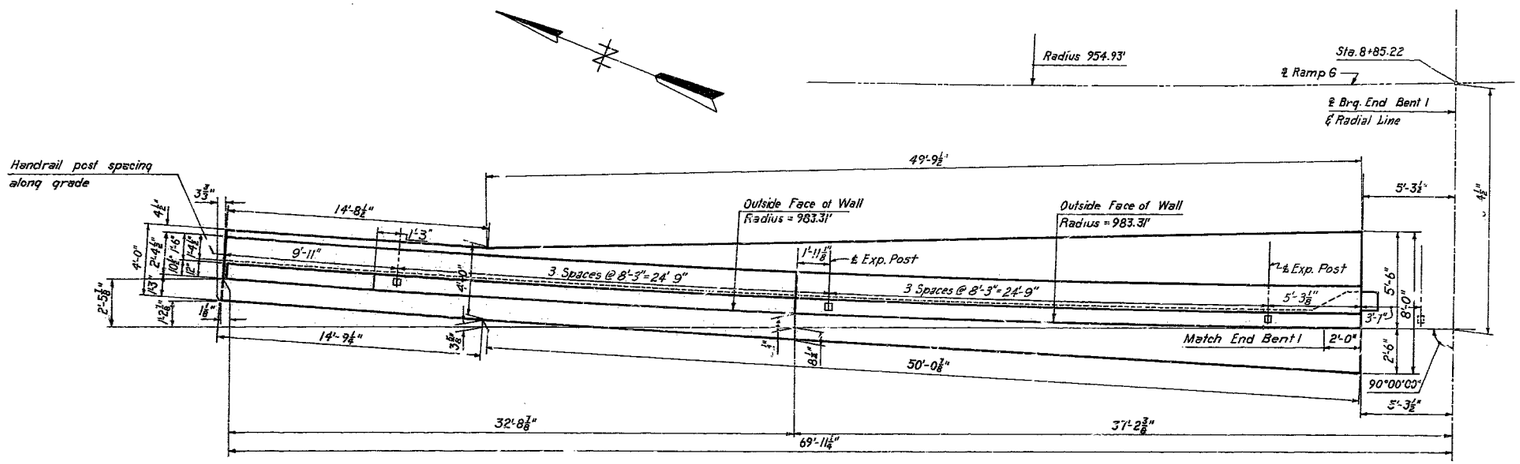

WEST WINGWALL FOOTING PLAN

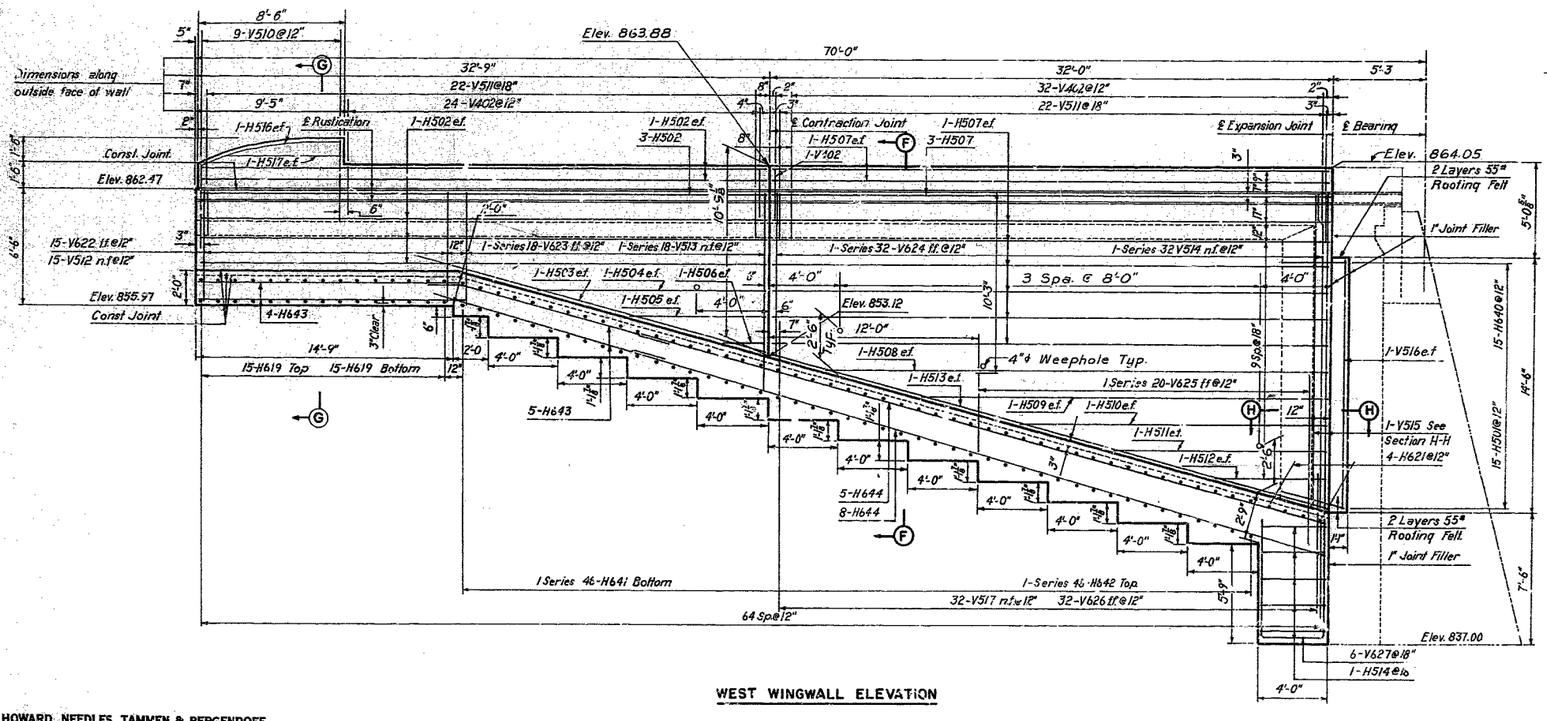

WEST WINGWALL ELEVATION

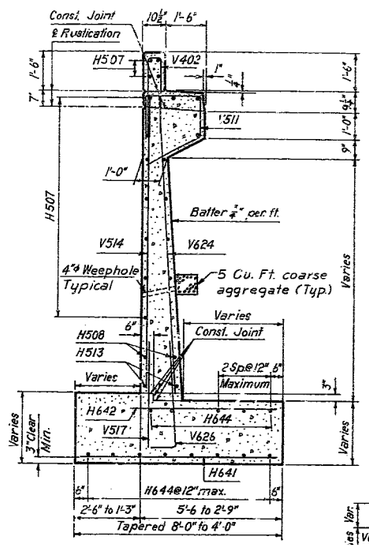

SECTION F-F

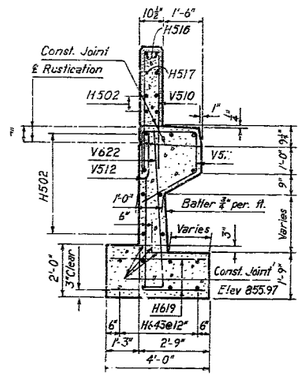

SECTION G-G

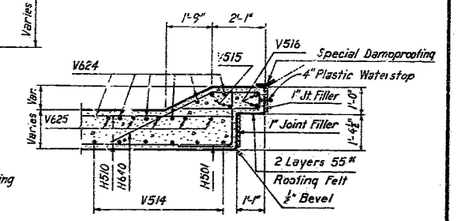

SECTION H-H

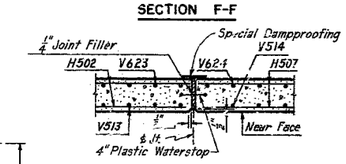

DETAIL OF CONTRACTION JOINT

Note:
Special Dampproofing to extend from bottom of wall to 1'-9" below top of curb.
Plastic Waterstop to extend from bottom of wall to 6" below top of curb. Cost of furnishing and placing waterstop to be included in the unit price bid for concrete.

Note:
Dimensions to surfaces receiving joint filler are to face of concrete unless noted otherwise.
4" Plastic waterstop shall be placed in 14'-6" key and in top section of wall to 6" below top of curb.
Cost of furnishing and placing waterstop shall be included in unit price bid for concrete.
--Special dampproofing to extend from bottom of wall to 1'-9" below top of curb.

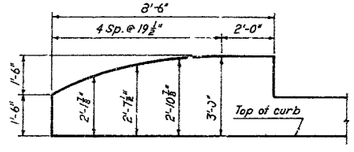

END POST ORDINATES

LEGEND
n.f. = near face
f.f. = far face
e.f. = each face

HOWARD, NEEDLES, TAMMEN & BERGENDOFF
CONSULTING ENGINEERS
KANSAS CITY NEW YORK

MADE	L.J.R.	DATE	2-21-62	TRACED		DATE	
CHECKED	S.H.L.	DATE	3-6-62	SCALE			

NOTE: This drawing is not to scale. Follow dimensions.

DETAILS END BENT 1

SHEET 6 OF 19

A-991

BRIDGE: RAMP "G" OVER RTE. I-70 & RAMP "H"

STATE ROAD - ROUTES I-435 & I-70 INTERCHANGE
FROM ROUTE 40 TO LEEDS ROAD
PROJECT NO. I-435-1(24)(RTE. I-435) STA. 11+49.41 (℄ RAMP "G")

JACKSON COUNTY

296

SEE FINAL PLATE BIDDING

MISSOURI STATE HIGHWAY DEPARTMENT

FED. ROAD DIV. NO.	STATE	FEDERAL PROJECT NO. & SEC.	FISCAL YEAR	SHEET NO.	TOTAL SHEETS
5	MO			12	
DIST. NO.	COUNTY		ROUTE	SEC.	
4	JACKSON				

Note:
Cost of coarse aggregate shall be included in price bid for other items of work.

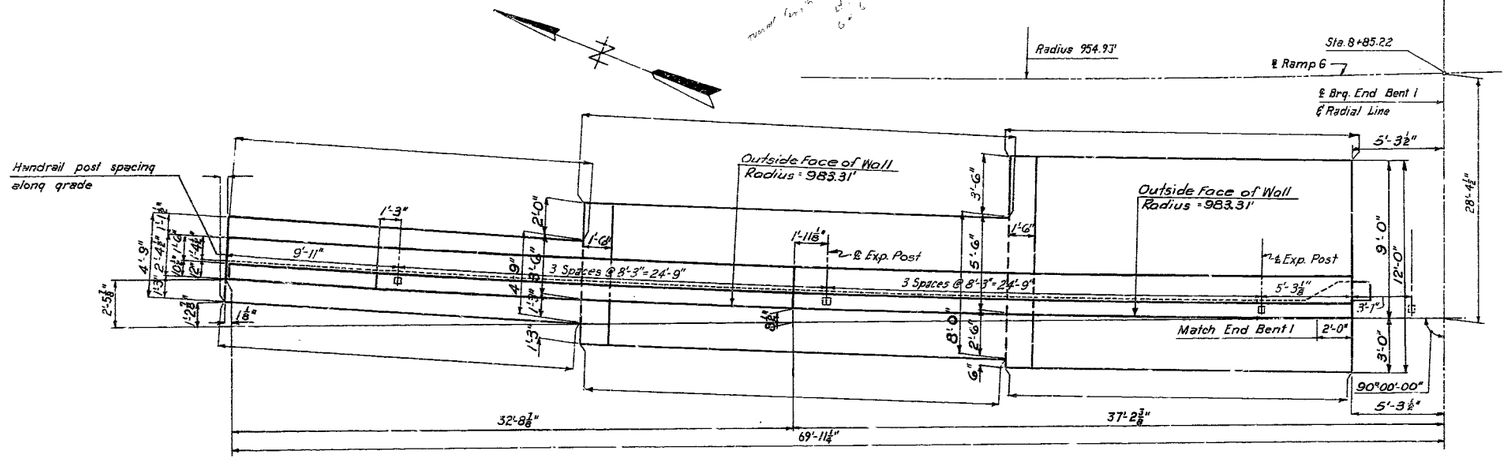

WEST WINGWALL FOOTING PLAN

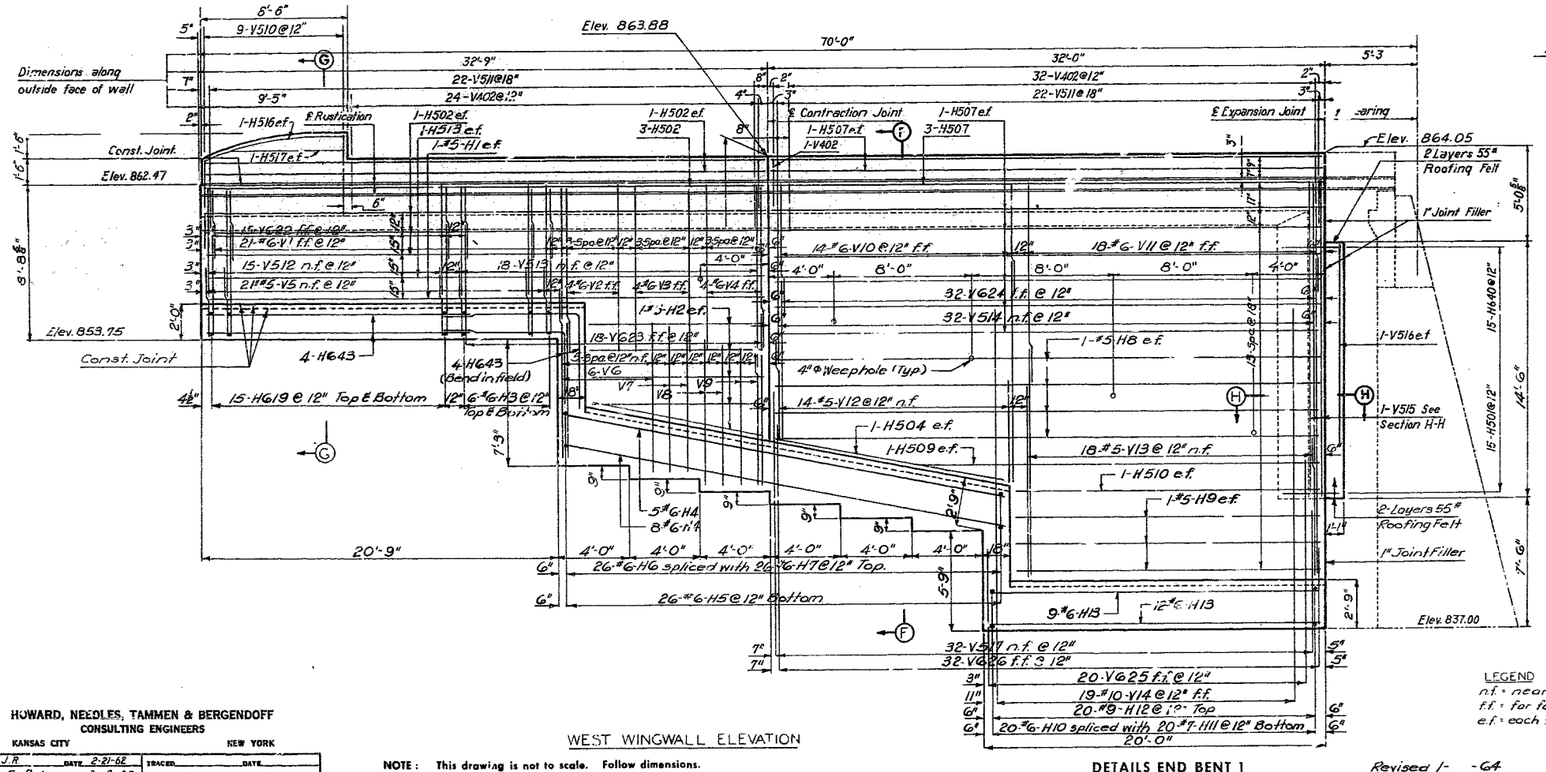

WEST WINGWALL ELEVATION

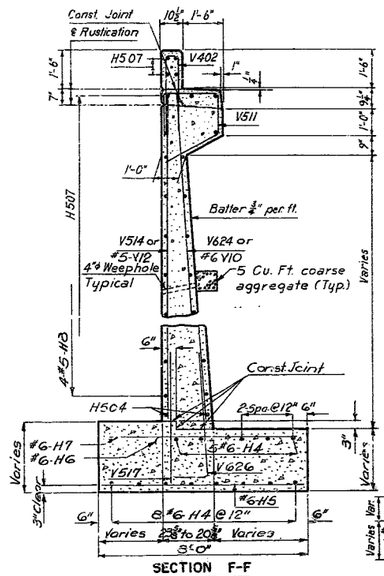

SECTION F-F

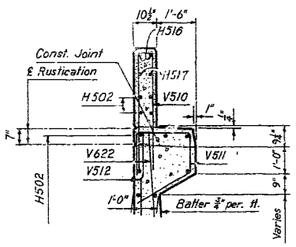

SECTION G-G

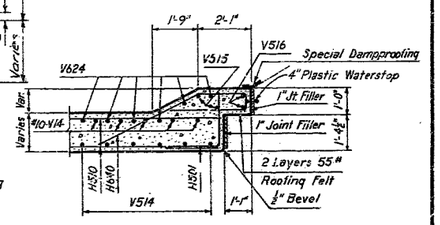

SECTION H-H

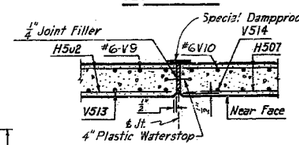

DETAIL OF CONTRACTION JOINT

Note:
Special Dampproofing to extend from bottom of wall to 1'-9" below top of curb.
Plastic Waterstop to extend from bottom of wall to 6" below top of curb. Cost of furnishing and placing waterstop to be included in the unit price bid for concrete.

Note:
Dimensions to surfaces receiving joint filler are to face of concrete unless noted otherwise.
4" Plastic waterstop shall be placed in 14'-6" key and in top section of wall to 6" below top of curb.
Cost of furnishing and placing waterstop shall be included in unit price bid for concrete.
Special dampproofing to extend from bottom of wall to 1'-9" below top of curb.

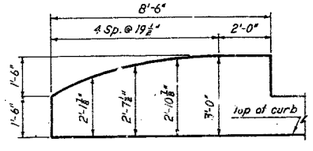

END POST ORDINATES

LEGEND
n.f. = near face
f.f. = far face
e.f. = each face

Void

BRIDGE: RAMP "G" OVER RTE. I-70 & RAMP "H"

STATE ROAD - ROUTES I-435 & I-70 INTERCHANGE
FROM ROUTE 40 TO LEEDS ROAD
PROJECT NO. I-435-1(24)(RTE. I-435) STA. 11+49.41 (℄ RAMP "G")

JACKSON COUNTY

A-991

HOWARD, NEEDLES, TAMMEN & BERGENDOFF
CONSULTING ENGINEERS
KANSAS CITY NEW YORK

MADE L.J.R.	DATE 2-21-62	TRACED	DATE
CHECKED S.A.L.	DATE 3-6-62	SCALE	

NOTE: This drawing is not to scale. Follow dimensions.

DETAILS END BENT 1

Revised 1- -64

SHEET 6 OF 19

182

Void

MISSOURI STATE HIGHWAY DEPARTMENT

FED. ROAD DIV. NO.	STATE	FEDERAL PROJECT NO. & SEC.	FISCAL YEAR	SHEET NO.	TOTAL SHEETS
5	MO			43	
DIST. NO.	COUNTY		ROUTE	SEC.	
4	JACKSON				

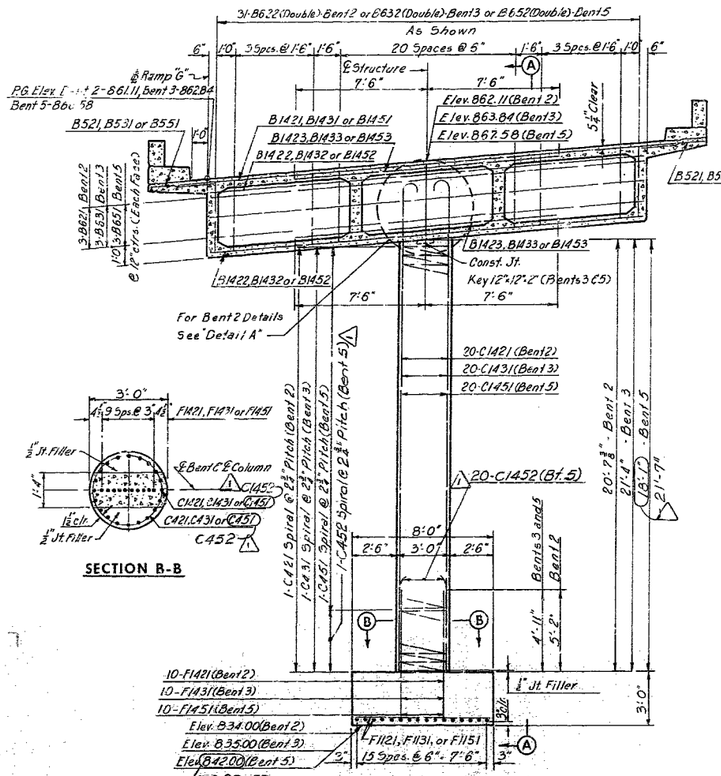

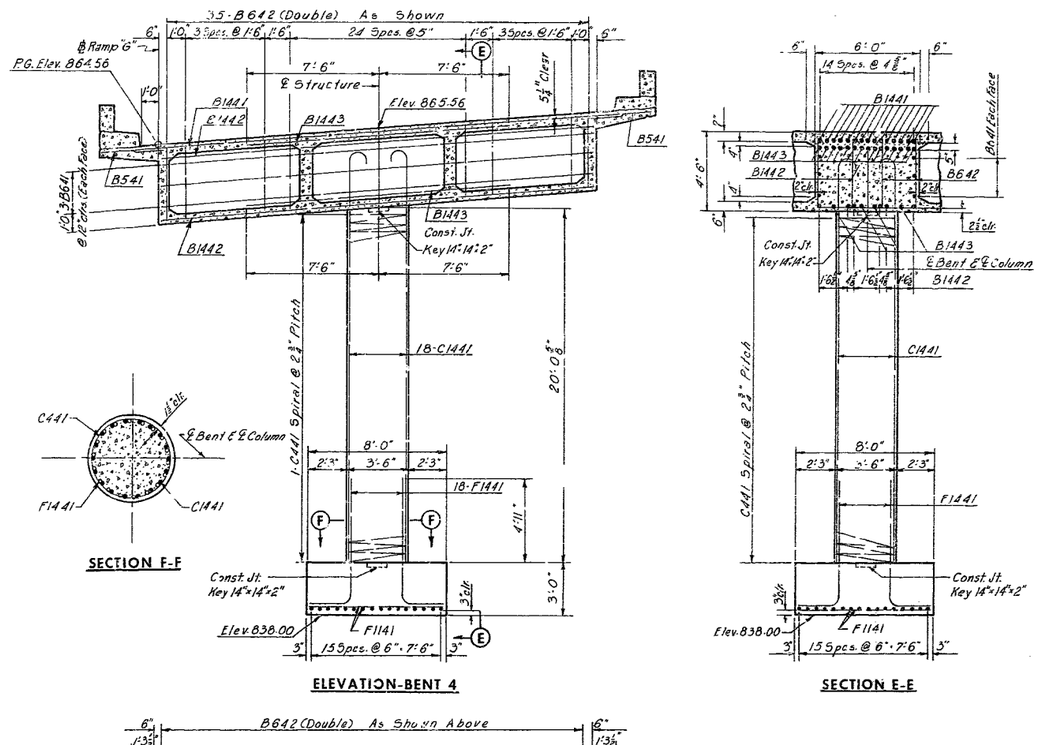

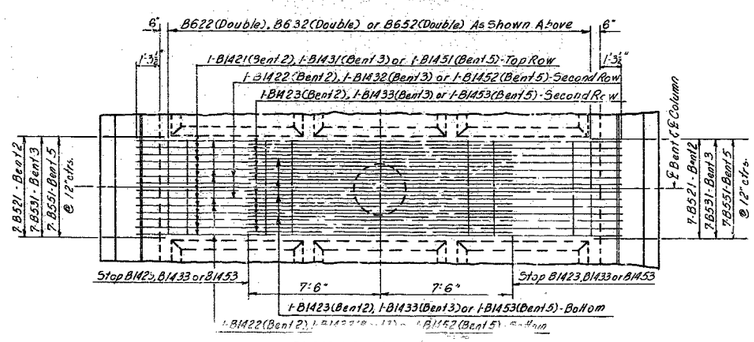

BRIDGE: RAMP "G" OVER RTE. I-70 & RAMP "H"

STATE ROAD - ROUTES I-435 & I-70 INTERCHANGE
FROM ROUTE 40 TO LEEDS ROAD
PROJECT NO. I-435-1(24)(RTE. I-435) STA. 11+49.41 (℄ RAMP "G")

JACKSON COUNTY

HOWARD, NEEDLES, TAMMEN & BERGENDOFF
CONSULTING ENGINEERS
KANSAS CITY NEW YORK

MADE S.A.L.	DATE 2-6-62	TRACED	DATE
CHECKED J.L.W.	DATE 3-20-62	SCALE	

NOTE: This drawing is not to scale. Follow dimensions.

Rev. 4-22-63

SHEET 7 OF 19

A-991

298

SEE FINAL PLANS DROWING NOS

MISSOURI STATE HIGHWAY DEPARTMENT

FED. ROAD DIV. NO.	STATE	FEDERAL PROJECT NO. & SEC.	FISCAL YEAR	SHEET NO.	TOTAL SHEETS
5	MO			44	
DIST. NO.	COUNTY		ROUTE	SEC.	
4	JACKSON				

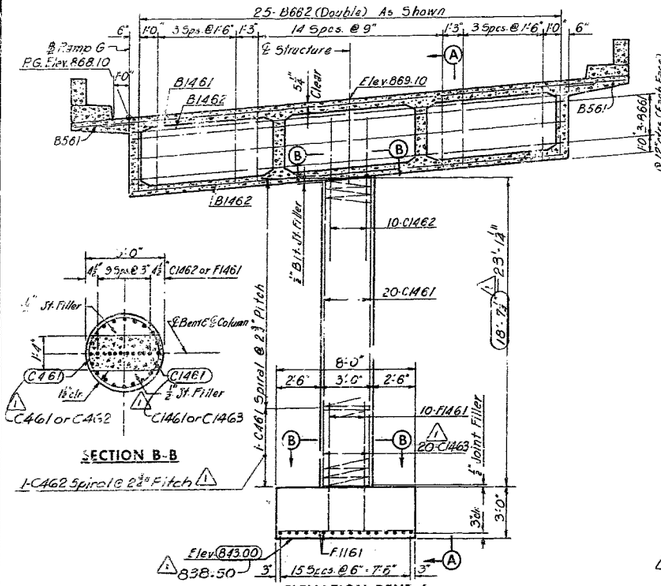

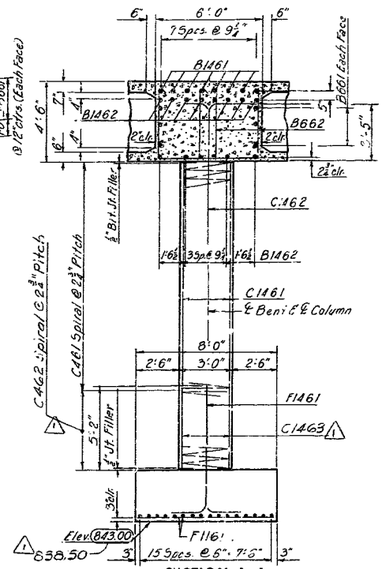

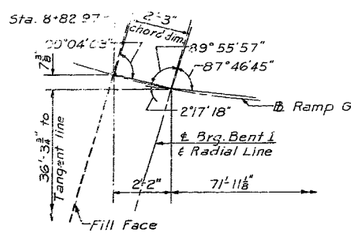

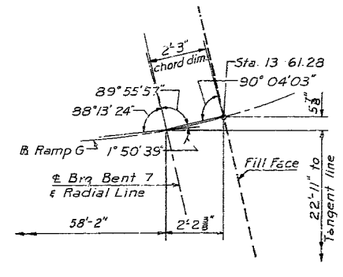

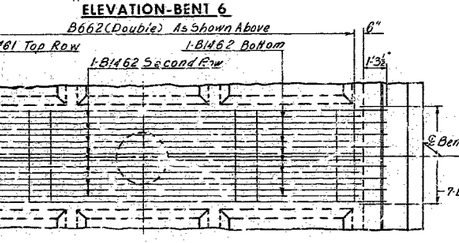

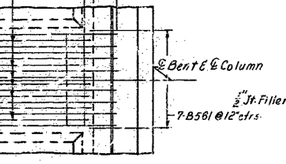

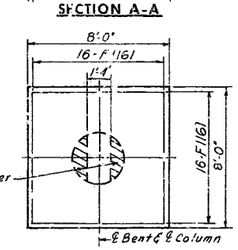

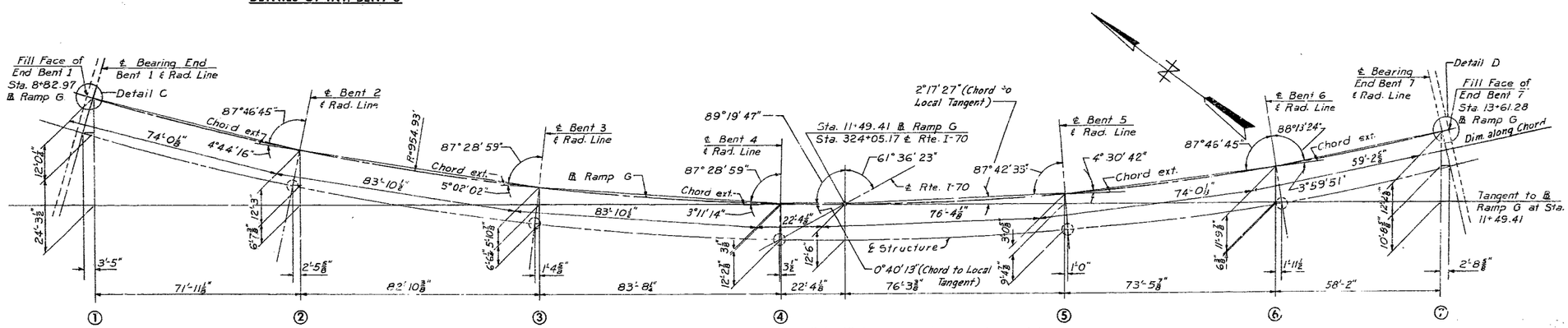

Note: All dimensions shown are horizontal

LAYOUT DATA FOR SUBSTRUCTURE

BRIDGE: RAMP "G" OVER RTE. I-70 & RAMP "H"

STATE ROAD - ROUTES I-435 & I-70 INTERCHANGE
FROM ROUTE 40 TO LEEDS ROAD
PROJECT NO. I-435-1(24)(RTE. I-435) STA. 11+49.41 (℄ RAMP "G")

JACKSON COUNTY

HOWARD, NEEDLES, TAMMEN & BERGENDOFF
CONSULTING ENGINEERS
KANSAS CITY NEW YORK

MADE SAL CLWL DATE 2-8-62	TRACED DATE
CHECKED JLW DATE 3-20-62	SCALE

NOTE: This drawing is not to scale. Follow dimensions.

Rev. 4-22-63

SHEET 8 OF 19

A-991

SEE FINAL PLANS SHOWN-LINES

299

MISSOURI STATE HIGHWAY DEPARTMENT

FED. ROAD DIST. NO.	STATE	FEDERAL PROJECT NO. & SEC.	FISCAL YEAR	SHEET NO.	TOTAL SHEETS
5	MO			45	
DIST. NO.	COUNTY		ROUTE	SEC.	
4	JACKSON				

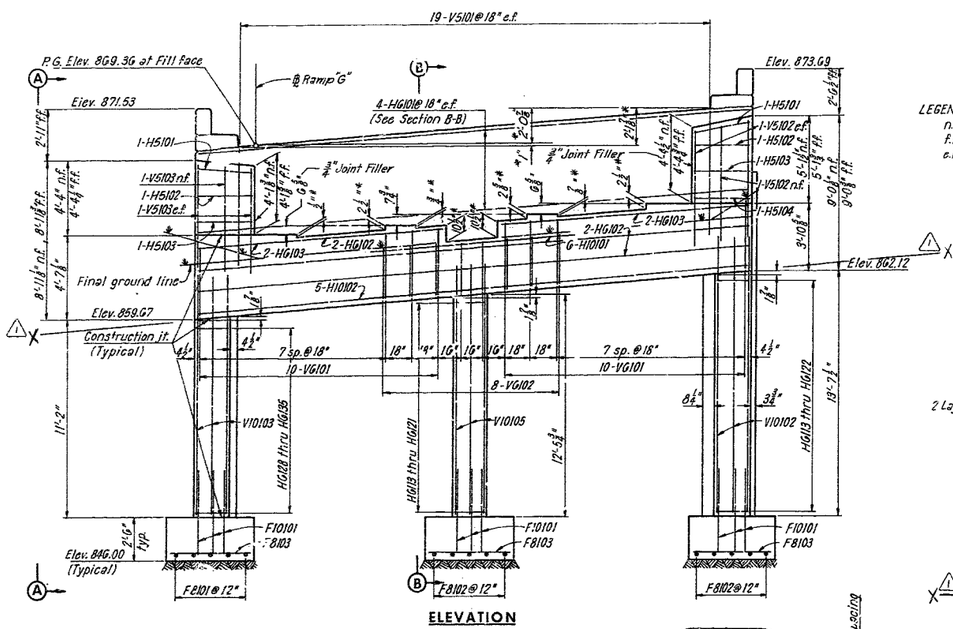

ELEVATION

Note:
Dimensions with * are given at front face of backwall.

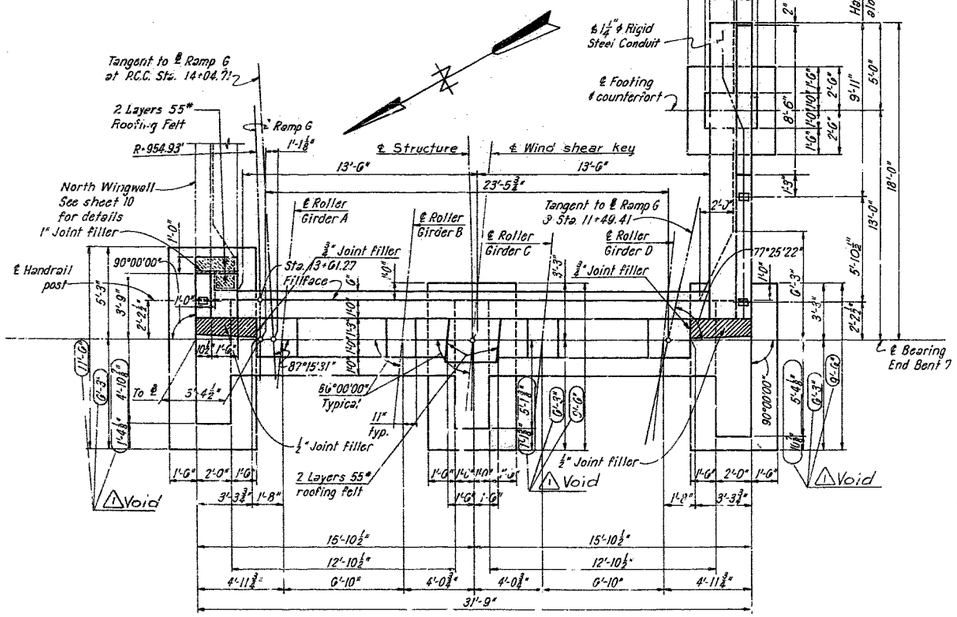

PLAN

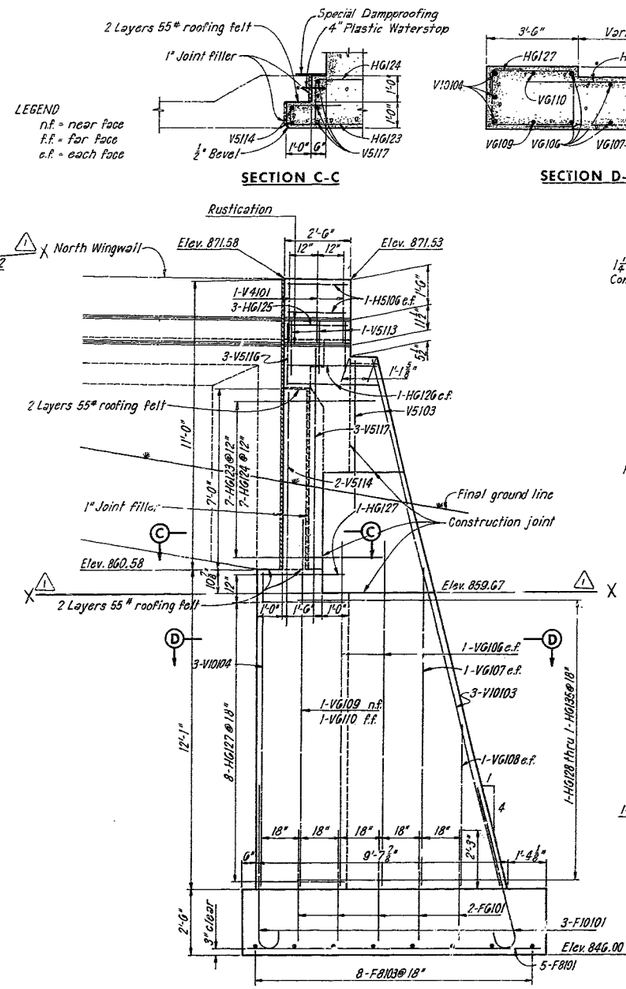

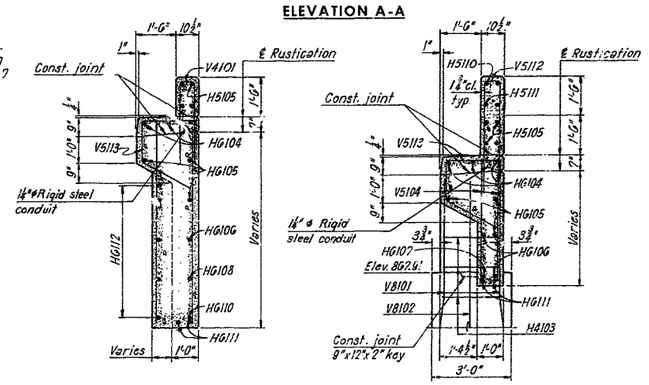

Note:
Dimensions to surfaces receiving joint filler are to face of concrete.
Use 2" clear on all reinforcement unless otherwise shown.
For End Bent 7 details not shown, see sheet 10.

⚠1 Note: Details below line X-X are void, see Sheet 1 of 3, A-991A.

HOWARD, NEEDLES, TAMMEN & BERGENDOFF
CONSULTING ENGINEERS
KANSAS CITY NEW YORK

MADE GLC	DATE 2-12-62	TRACED	DATE
CHECKED S.A.L.	DATE 3-12-62	SCALE	

NOTE: This drawing is not to scale. Follow dimensions.

DETAILS OF END BENT 7

⚠1 Rev. 4-22-63

SHEET 9 OF 19

BRIDGE: RAMP "G" OVER RTE. I-70 & RAMP "H"

STATE ROAD - ROUTES I-435 & I-70 INTERCHANGE
FROM ROUTE 40 TO LEEDS ROAD
PROJECT NO. I-435-1(24)(RTE. I-435) STA. 11+49.41 (℄ RAMP "G")

JACKSON COUNTY

A-991

300

SEE FINAL PLANS BROWN-LINES

MISSOURI STATE HIGHWAY DEPARTMENT

FED. ROAD DIV. NO.	STATE	FEDERAL PROJECT NO. & SEC.	FISCAL YEAR	SHEET NO.	TOTAL SHEETS
5	MO			AC	
DIST. NO.	COUNTY			ROUTE	SEC.
4	JACKSON				

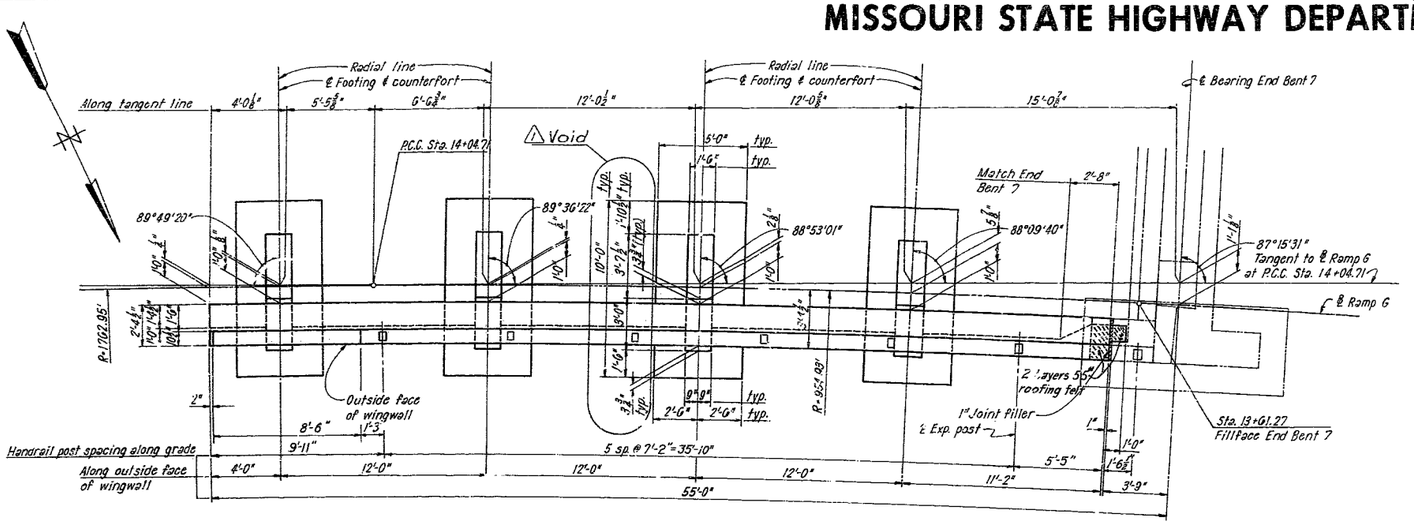

NORTH WINGWALL PLAN

Note: Baseline offsets from the tangent are given along radial lines.

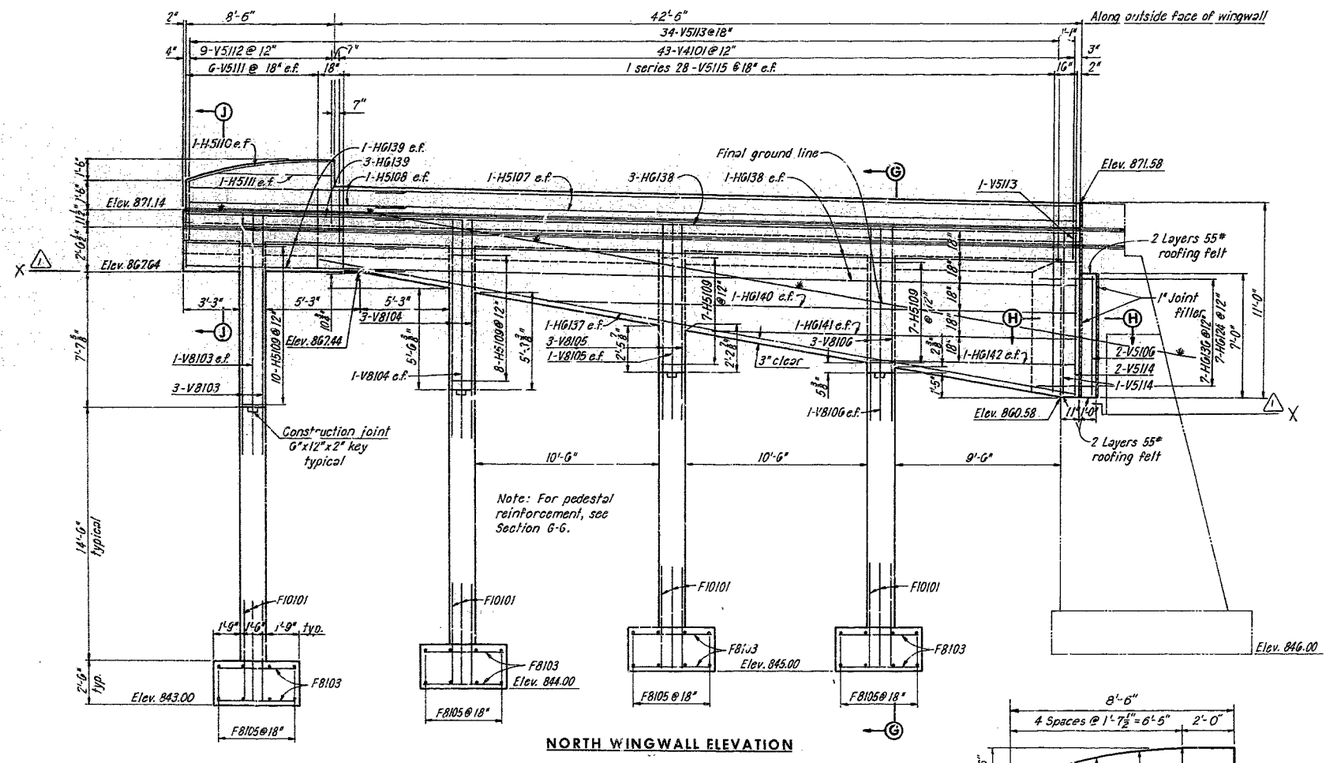

NORTH WINGWALL ELEVATION

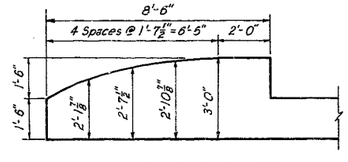

END POST ORDINATES

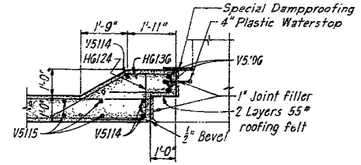

SECTION H-H

Notes:
4" Plastic waterstop shall be placed in 7'-0" key and in top section of wall to 6" below top of curb.
Cost of furnishing and placing waterstop shall be included in unit price bid for concrete.
Special dampproofing is to extend from bottom of key to 1'-9" below top of curb.

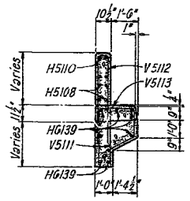

SECTION J-J

SECTION G-G

(All pedestals similar)

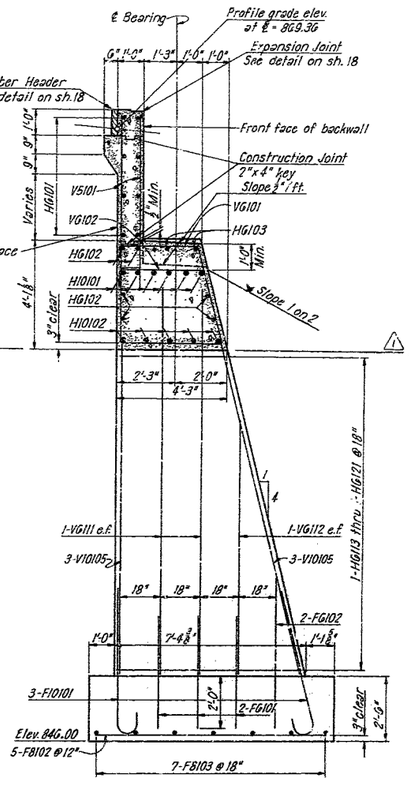

SECTION B-B

Note:
For End Bent 7 details not shown, see sheet 9.

⚠1 Note: Details below line X-X are void, see Sheet 2 of 3, A-991A

BRIDGE: RAMP "G" OVER RTE. I-70 & RAMP "H"

STATE ROAD - ROUTES I-435 & I-70 INTERCHANGE
FROM ROUTE 40 TO LEEDS ROAD
PROJECT NO. I-435-1(24)(RTE. I-435) STA. 11+49.41 (℄ RAMP "G")

JACKSON COUNTY

HOWARD, NEEDLES, TAMMEN & BERGENDOFF
CONSULTING ENGINEERS
KANSAS CITY NEW YORK

MADE GLC DATE 2-28-62 TRACED DATE
CHECKED S.A.L. DATE 3-12-62 SCALE

NOTE: This drawing is not to scale. Follow dimensions.

DETAILS OF END BENT 7

⚠1 Rev. 4-22-63.

SHEET 10 OF 19

A-991

301

SEE FINAL PLANS BROWN LINES

MISSOURI STATE HIGHWAY DEPARTMENT

FED. ROAD DIV. NO.	STATE	FEDERAL PROJECT (NO. & SEC.	FISCAL YEAR	SHEET NO.	TOTAL SHEETS
5	MO			47	
DIST. NO.	COUNTY			ROUTE	JOB.
4	JACKSON				

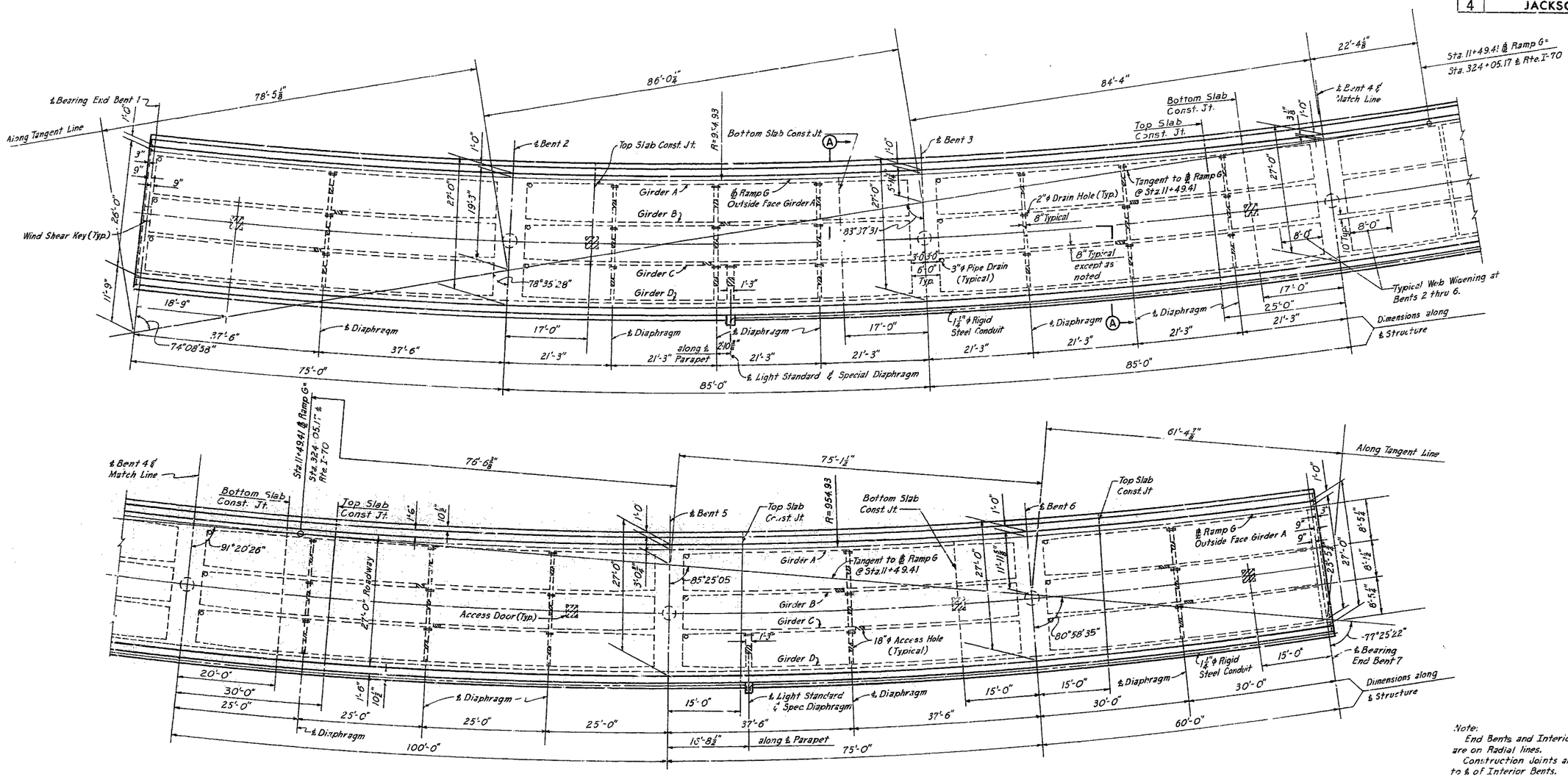

FRAMING PLAN

Note:
End Bents and Interior Bents are on Radial lines.
Construction Joints are parallel to ℄ of Interior Bents.

302

HOWARD, NEEDLES, TAMMEN & BERGENDOFF
CONSULTING ENGINEERS
KANSAS CITY NEW YORK

MADE	JLW	DATE	12-4-61	TRACED		DATE	
CHECKED	LWL	DATE	4-20-62	SCALE			

NOTE: This drawing is not to scale. Follow dimensions.

BRIDGE: RAMP "G" OVER RTE. I-70 & RAMP "H"

STATE ROAD - ROUTES I-435 & I-70 INTERCHANGE
FROM ROUTE 40 TO LEEDS ROAD
PROJECT NO. I-435-1(24)(RTE. I-435) STA. 11+49.41 (℄ RAMP "G")

JACKSON COUNTY

SHEET 11 OF 19

A-991

MISSOURI STATE HIGHWAY DEPARTMENT

FED. ROAD DIV. NO.	STATE	FEDERAL PROJECT NO. & SEC.	FISCAL YEAR	SHEET NO.	TOTAL SHEETS
5	MO			48	
DIST. NO.	COUNTY		ROUTE	SEC.	
4	JACKSON				

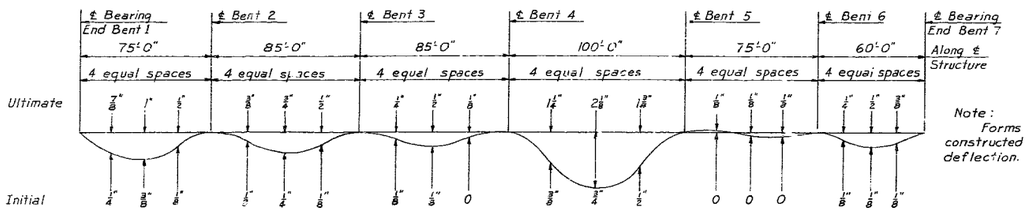

DEAD LOAD DEFLECTION DIAGRAM

Note:
Forms shall be constructed for ultimate deflection.

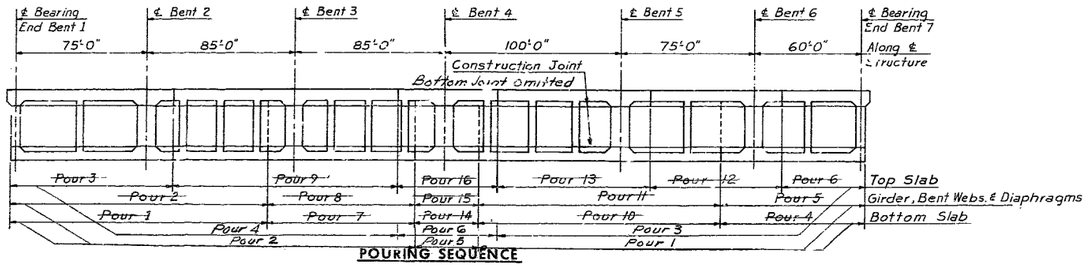

POURING SEQUENCE

Note:
Pour No. 14 shall be made 14 days after Pour No. 10.
Pour No. 15 shall be made 14 days after Pour No. 11.
Pour No. 16 shall be made 14 days after Pour No. 13.

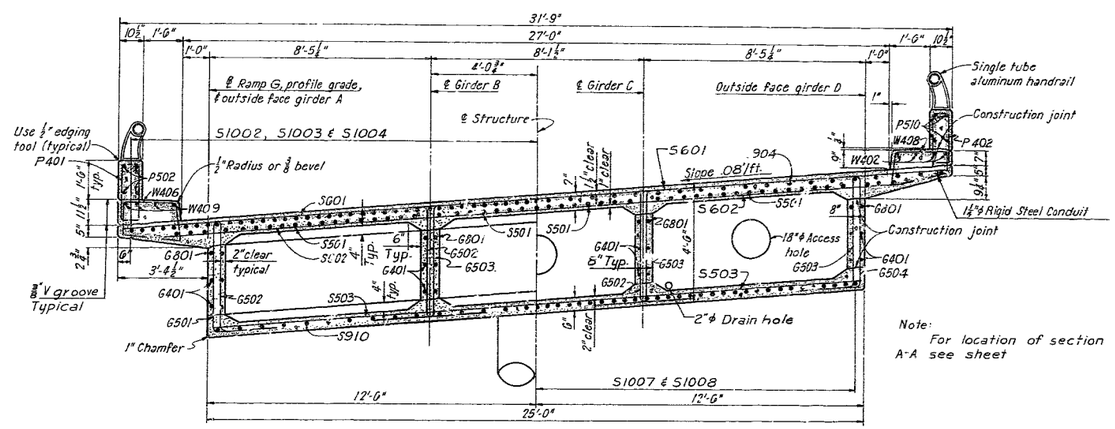

SECTION A-A

Note:
For location of section A-A see sheet

Pouring Roadway Slabs

No longitudinal construction joints will be permitted unless shown on plans. The contractor ~~shall~~ use an approved oscillating screed type, self-propelled mechanical finisher ~~and shall observe the basic pouring sequence unless he can demonstrate to the satisfaction of the engineer that he is equipped to pour and satisfactorily finish the roadway slabs at a rate which will permit the combining of such of the basic pours as may be specifically designated by the engineer and not required for design reasons.~~ With use of forms and falsework meeting the approval of the engineer, the girder webs and diaphragms may be poured with the bottom slab sections on which they bear.

Note:
All forms are to be removed from the interior of box girders above top slab forms as indicated in section 53.4.5.4 of the Standard Specification.

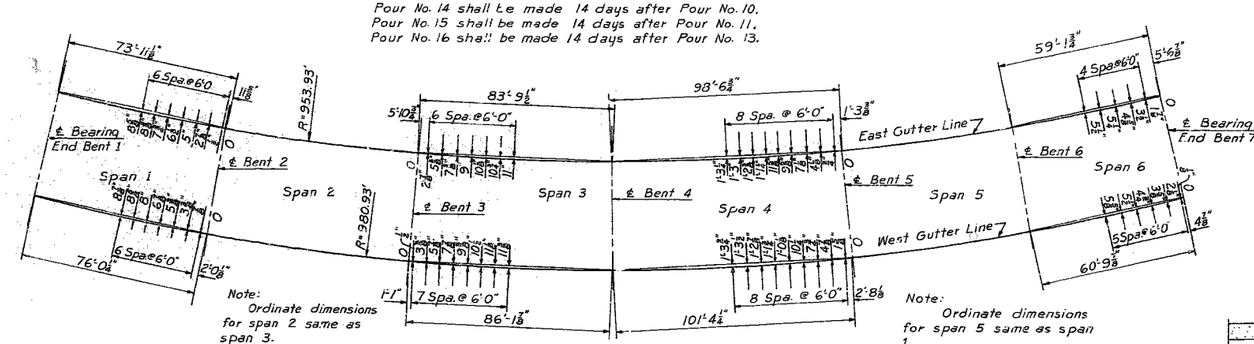

PLAN OF SLAB SHOWING CURVE OFFSETS

Note:
Ordinate dimensions for span 2 same as span 3.

Note:
Ordinate dimensions for span 5 same as span 1.

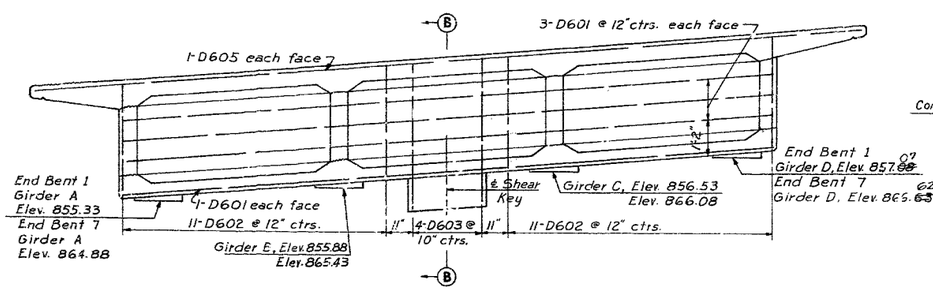

END BENT WEB REINFORCEMENT

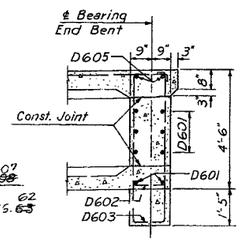

SECTION B-B

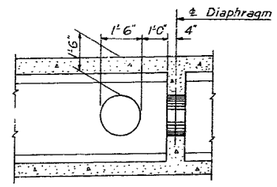

GIRDER WEB ACCESS HOLE

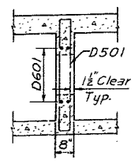

SECTION C-C

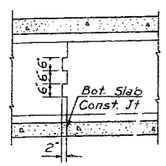

GIRDER WEB CONSTRUCTION JOINT

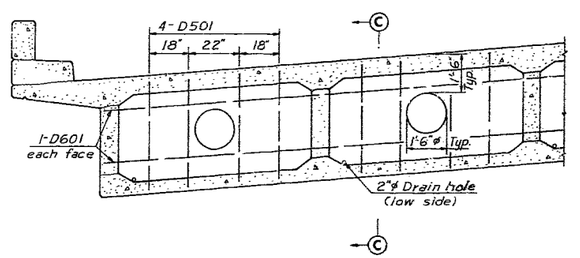

DIAPHRAGM DETAILS

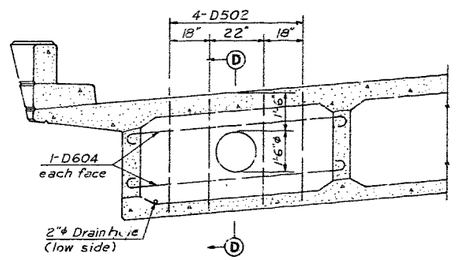

SPECIAL DIAPHRAGM

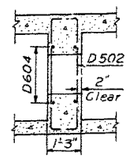

SECTION D-D

Note:
End Bent 7 shown End Bent 1 similar but opposite hand, except as shown.

NOTE: This drawing is not to scale. Follow dimensions.

HOWARD, NEEDLES, TAMMEN & BERGENDOFF
CONSULTING ENGINEERS
KANSAS CITY NEW YORK

MADE LWL DATE 2-22-62 TRACED DATE
CHECKED CGP DATE 3-7-62 SCALE

BRIDGE: RAMP "G" OVER RTE. I-70 & RAMP "H"

STATE ROAD - ROUTES I-435 & I-70 INTERCHANGE
FROM ROUTE 40 TO LEEDS ROAD
PROJECT NO. I-435-1(24)(RTE. I-435) STA. 11+49.41 (℄ RAMP "G")

JACKSON COUNTY

SHEET 12 OF 19

A-991

303

CONSTRUCTION CHANGES NOTED HEREON

MISSOURI STATE HIGHWAY DEPARTMENT

FED. ROAD DIV. NO.	STATE	FEDERAL PROJECT NO. & SEC.	FISCAL YEAR	SHEET NO.	TOTAL SHEETS
5	MO			49	
DIST. NO.	COUNTY			ROUTE	SEC.
4	JACKSON				

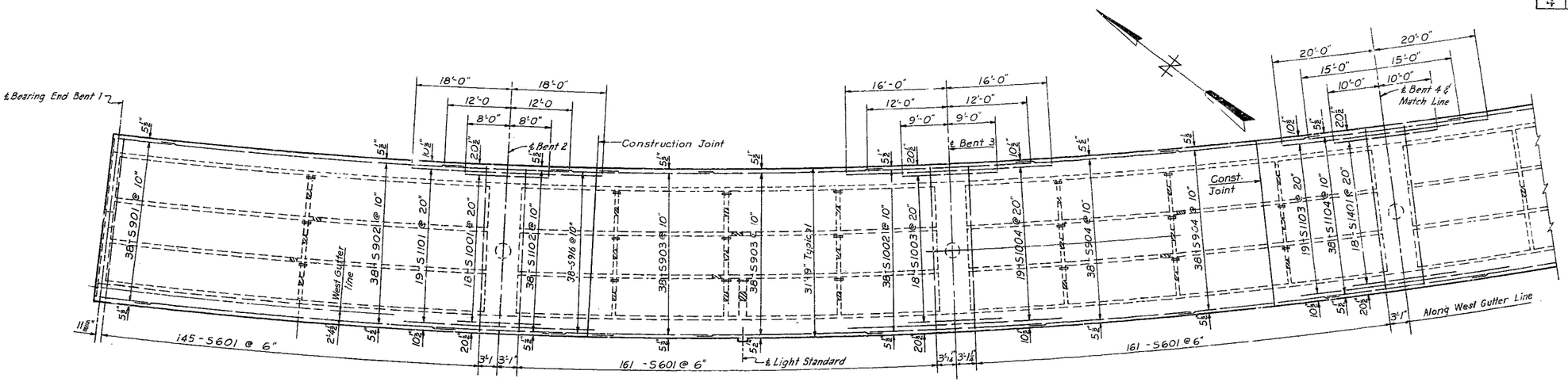

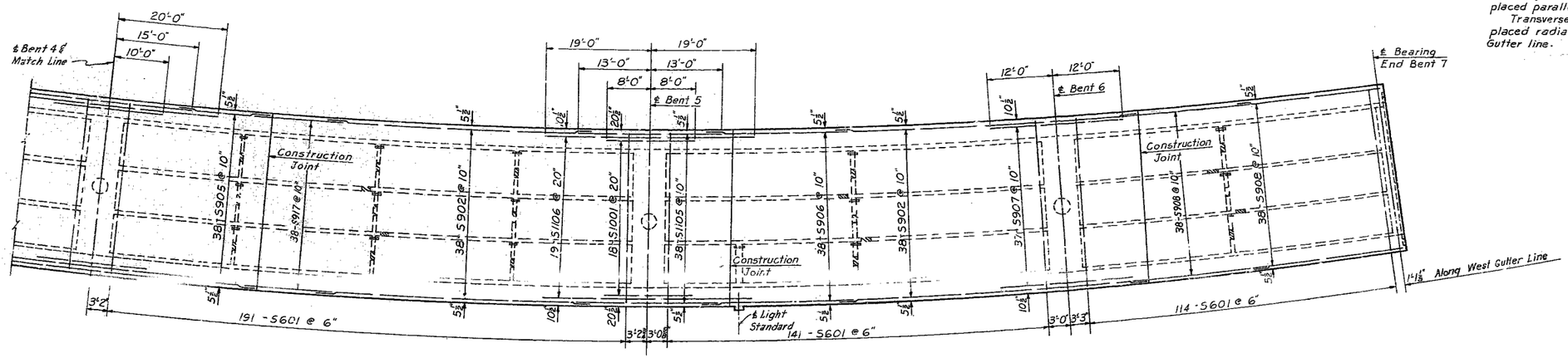

Notes:
For location of construction joints see sheet 11.
Longitudinal reinforcement shall be placed parallel to ℄ girders.
Transverse reinforcement shall be placed radially, spaced along West Gutter line.

PLAN OF TOP SLAB SHOWING TOP SLAB REINFORCEMENT

304

HOWARD, NEEDLES, TAMMEN & BERGENDOFF
CONSULTING ENGINEERS
KANSAS CITY NEW YORK

DRAWN LWL	DATE 2-24-62	TRACED	DATE
CHECKED CGP	DATE 3-9-62	SCALE	

NOTE: This drawing is not to scale. Follow dimensions.

BRIDGE: RAMP "G" OVER RTE. I-70 & RAMP "H"

STATE ROAD - ROUTES I-435 & I-70 INTERCHANGE
FROM ROUTE 40 TO LEEDS ROAD
PROJECT NO. I-435-1(24)(RTE. I-435) STA. 11+49.41 (℄ RAMP "G")

JACKSON COUNTY

SHEET 13 OF 19

A-991

MISSOURI STATE HIGHWAY DEPARTMENT

FED. ROAD DIV. NO.	STATE	FEDERAL PROJECT NO. & SEC.	FISCAL YEAR	SHEET NO.	TOTAL SHEETS
5	MO			50	
DIST. NO.	COUNTY		ROUTE	SEC.	
4	JACKSON				

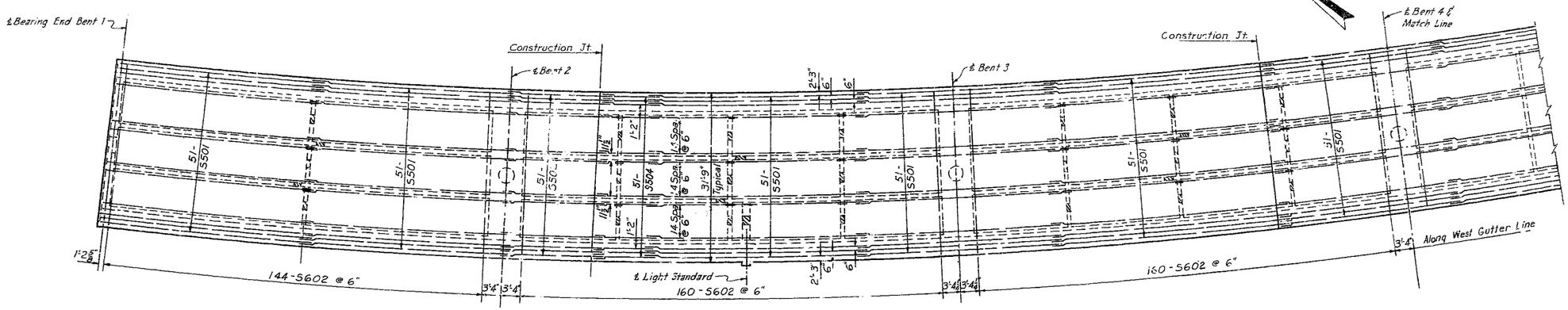

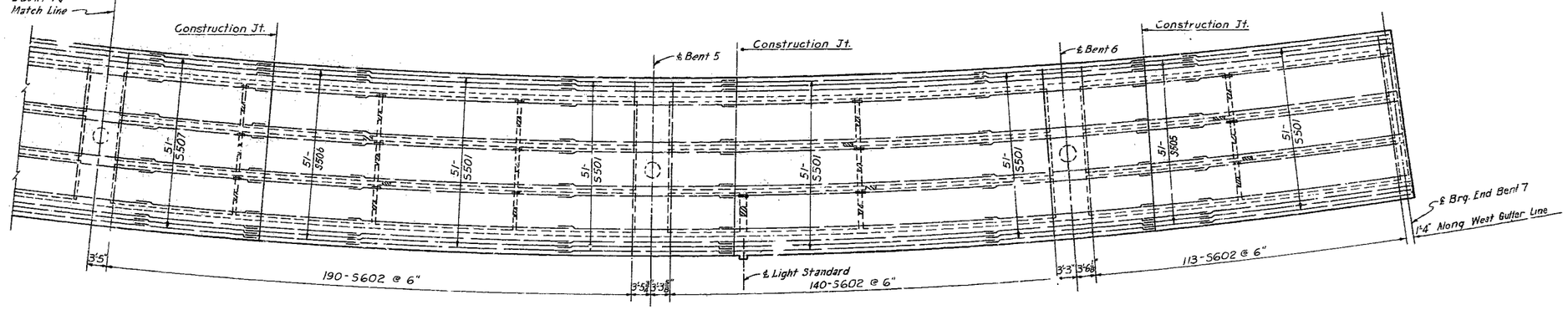

Notes:
For location of construction joint see sheet 11.
Longitudinal reinforcement shall be placed parallel to ℄ girders.
Transverse reinforcement shall be placed radially, spaced along West Gutter line.
For web widening at Interior Bents see sheet 11.

PLAN OF TOP SLAB SHOWING BOTTOM OF TOP SLAB REINFORCEMENT

305

HOWARD, NEEDLES, TAMMEN & BERGENDOFF
CONSULTING ENGINEERS
KANSAS CITY NEW YORK

MADE L.W.L.	DATE 2-26-62	TRACED	DATE
CHECKED C.G.P.	DATE 3-9-62	SCALE	

NOTE: This drawing is not to scale. Follow dimensions.

BRIDGE: RAMP "G" OVER RTE. I-70 & RAMP "H"

STATE ROAD - ROUTES I-435 & I-70 INTERCHANGE
FROM ROUTE 40 TO LEEDS ROAD
PROJECT NO. I-435-1(24)(RTE. I-435) STA. 11+49.41 (℄ RAMP "G")

JACKSON COUNTY

A-991

MISSOURI STATE HIGHWAY DEPARTMENT

FED. ROAD DIV. NO.	STATE	FEDERAL PROJECT NO. & SEC.	FISCAL YEAR	SHEET NO.	TOTAL SHEETS
5	MO			51	
DIST. NO.	COUNTY		ROUTE	SEC.	
4	JACKSON				

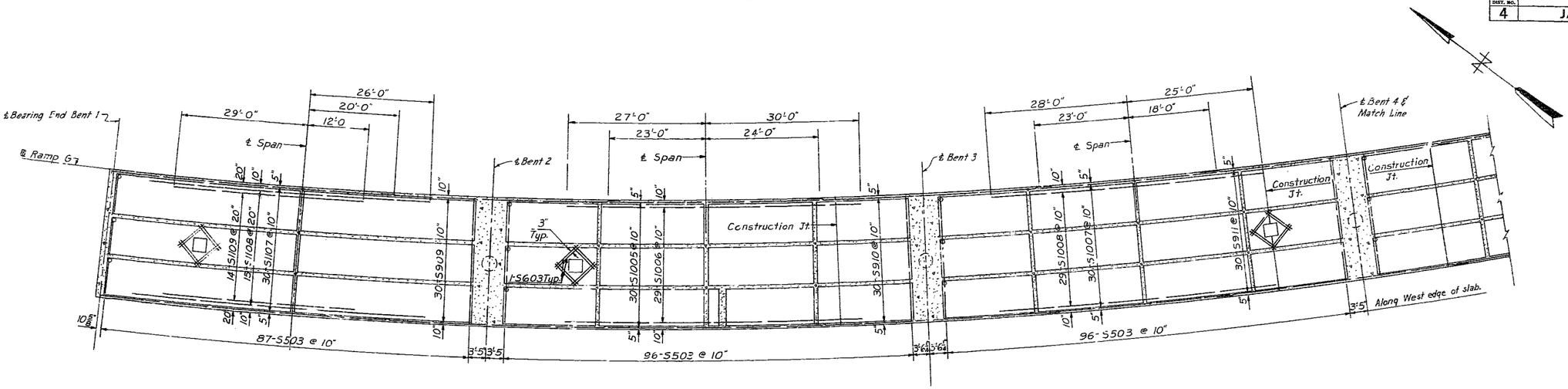

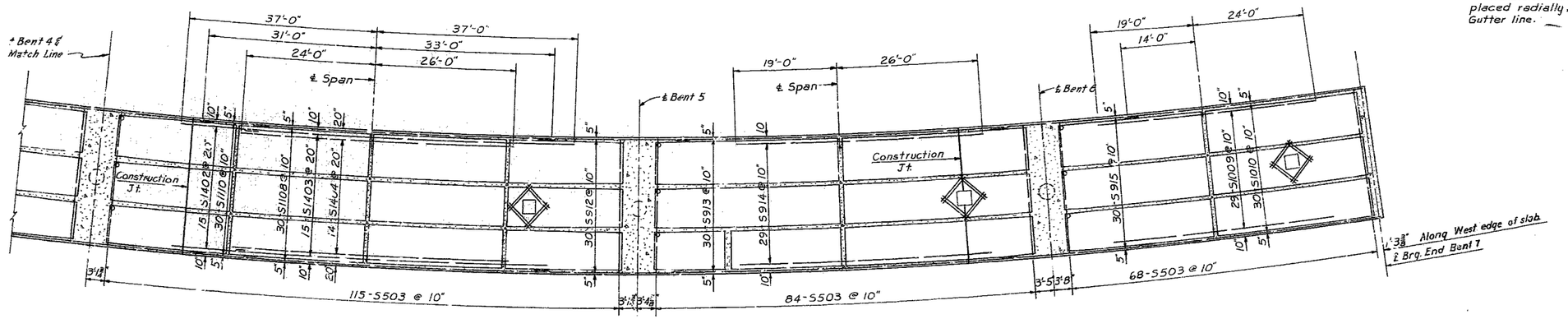

Notes:
Cut or bend reinforcement in field to clear access doors.
Longitudinal reinforcement shall be placed parallel to ℄ girders.
Transverse reinforcement shall be placed radially, spaced along West Gutter line.

PLAN OF BOTTOM SLAB SHOWING BOTTOM SLAB REINFORCEMENT

306

HOWARD, NEEDLES, TAMMEN & BERGENDOFF
CONSULTING ENGINEERS
KANSAS CITY NEW YORK

MADE L.W.L.	DATE 2-28-62	TRACED	DATE
CHECKED C.G.P.	DATE 3-9-62	SCALE	

NOTE: This drawing is not to scale. Follow dimensions.

BRIDGE: RAMP "G" OVER RTE. I-70 & RAMP "H"

STATE ROAD - ROUTES I-435 & I-70 INTERCHANGE
FROM ROUTE 40 TO LEEDS ROAD
PROJECT NO. I-435-1(24)(RTE. I-435) STA. 11+49.41 (℄ RAMP "G")

JACKSON COUNTY

A-991

MISSOURI STATE HIGHWAY DEPARTMENT

FED. ROAD DIV. NO.	STATE	FEDERAL PROJECT NO. & SEC.	FISCAL YEAR	SHEET NO.	TOTAL SHEETS
5	MO			52	
DIST. NO.	COUNTY			ROUTE	SEC.
4	JACKSON				

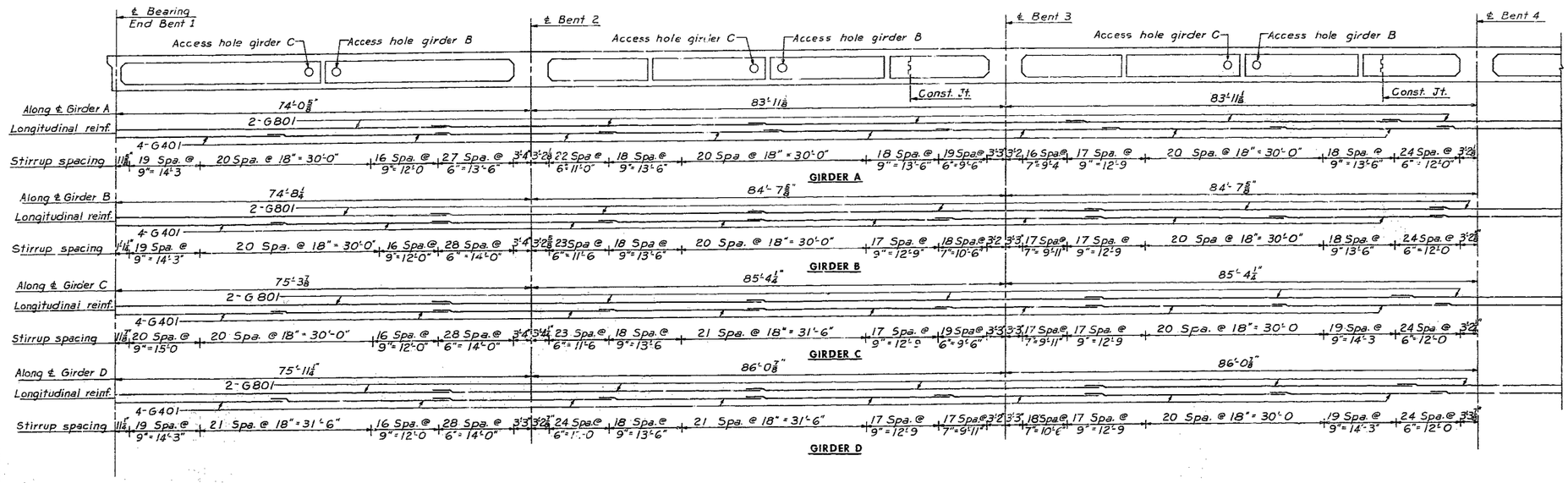

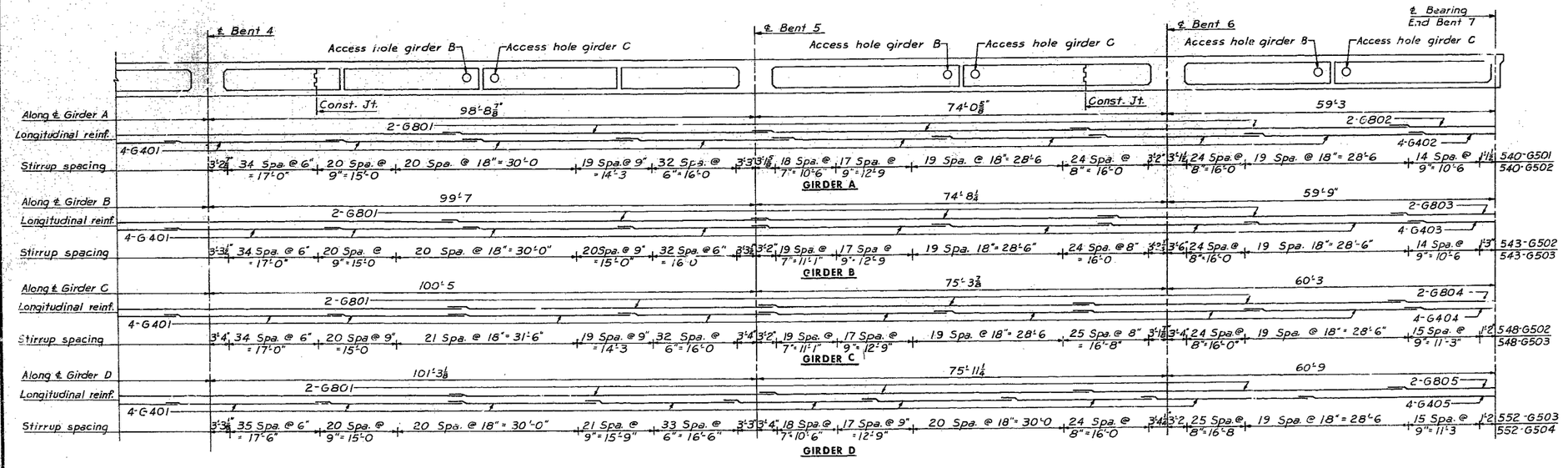

Notes:
Longitudinal dimensions shown are horizontal.
Longitudinal reinforcement shall be placed parallel to ℄ girder.
Transverse reinforcement shall be placed radially along ℄ girder.
Stirrups in interior girder webs shall be adjusted in the field to clear access holes.

GIRDER WEB REINFORCEMENT

BRIDGE: RAMP "G" OVER RTE. I-70 & RAMP "H"

STATE ROAD - ROUTES I-435 & I-70 INTERCHANGE
FROM ROUTE 40 TO LEEDS ROAD
PROJECT NO. I-435-1(24)(RTE. I-435) STA. 11+49.41 (℄ RAMP "G")

JACKSON COUNTY

A-991

HOWARD, NEEDLES, TAMMEN & BERGENDOFF
CONSULTING ENGINEERS
KANSAS CITY NEW YORK

MADE LWL	DATE 3-1-62	TRACED	DATE
CHECKED CGP	DATE 3-9-62	SCALE	

NOTE: This drawing is not to scale. Follow dimensions.

SHEET 16 OF 19

NO CONSTRUCTION CHANGES

30.7

MISSOURI STATE HIGHWAY DEPARTMENT

FED. ROAD DIV. NO.	STATE	FEDERAL PROJECT NO. & SEC.	FISCAL YEAR	SHEET NO.	TOTAL SHEETS
5	MO			53	
DIST. NO.	COUNTY			ROUTE	SEC.
4	JACKSON				

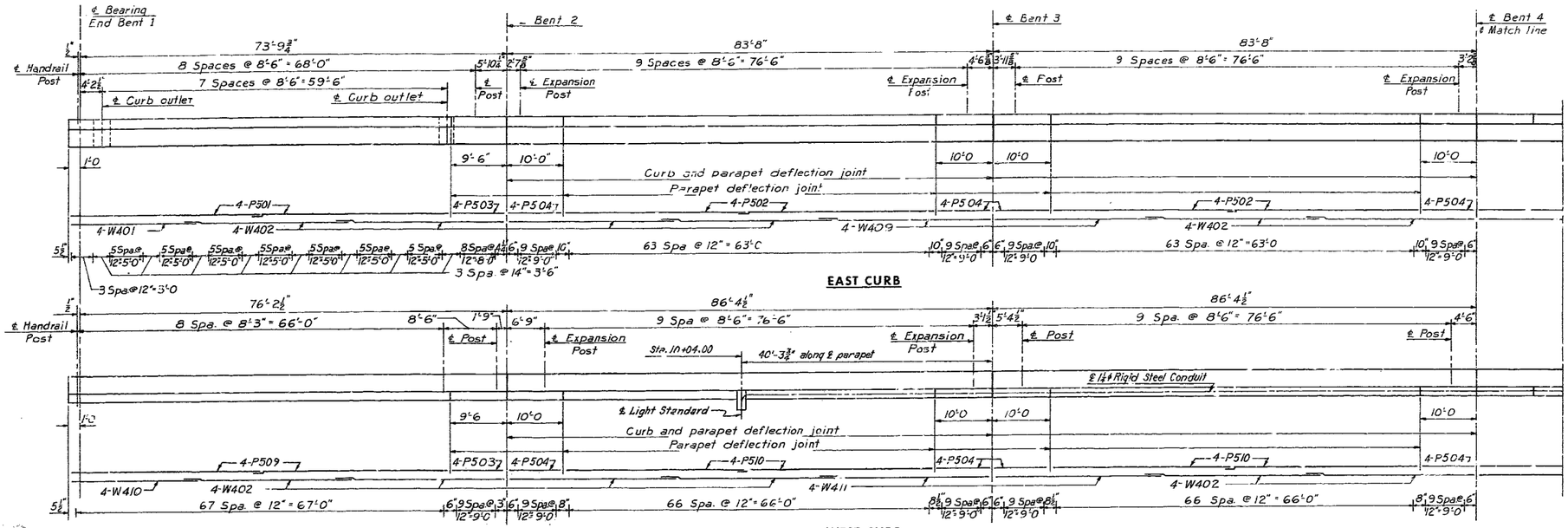

CURB AND PARAPET

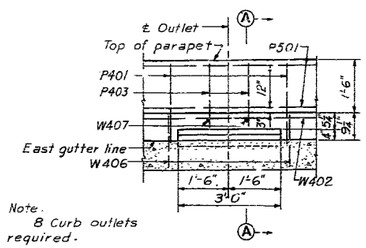

Note.
8 Curb outlets required.

ELEVATION

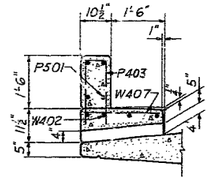

SECTION A-A

CURB OUTLET DETAILS EAST CURB

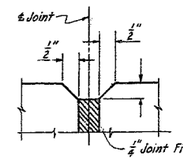

DEFLECTION JOINT DETAILS

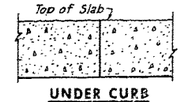

UNDER CURB

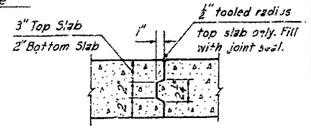

TRANSVERSE SLAB

CONSTRUCTION JOINTS

308

HOWARD, NEEDLES, TAMMEN & BERGENDOFF
CONSULTING ENGINEERS
KANSAS CITY NEW YORK

MADE LWL	DATE 3-5-62	TRACED	DATE
CHECKED CGP	DATE 3-9-62	SCALE	

NOTE: This drawing is not to scale. Follow dimensions.

BRIDGE: RAMP "G" OVER RTE. I-70 & RAMP "H"

STATE ROAD - ROUTES I-435 & I-70 INTERCHANGE
FROM ROUTE 40 TO LEEDS ROAD
PROJECT NO. I-435-1(24)(RTE. I-435) STA. 11+49.41 (℄ RAMP "G")

JACKSON COUNTY

SHEET 17 OF 19

A-991

NO CONSTRUCTION CHANGES

MISSOURI STATE HIGHWAY DEPARTMENT

FED. ROAD DIV. NO.	STATE	FEDERAL PROJECT NO. & SEC.	FISCAL YEAR	SHEET NO.	TOTAL SHEETS
5	MO			54	
DIST. NO.	COUNTY		ROUTE	SEC.	
4					

Note.

~~Approved stud welded anchors may be used in lieu of #5 bars shown.~~

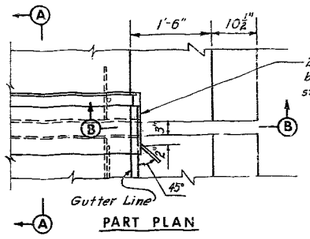

PART PLAN

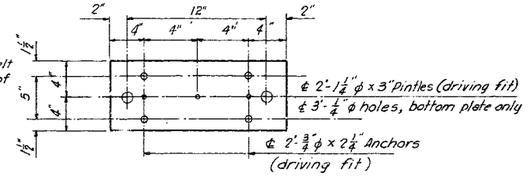

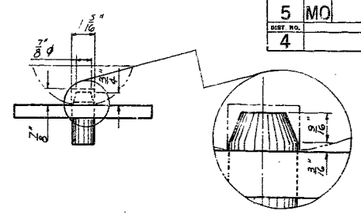

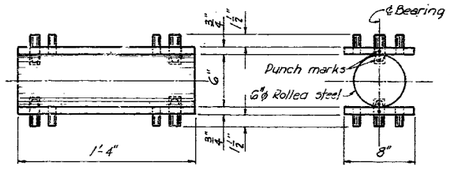

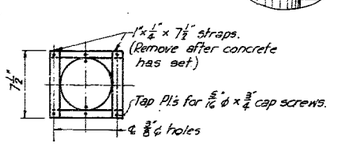

Note:
Top and bottom plates to be U55 T-1 Alloy or equivalent. Materials for pintles and rollers shall be cold finished carbon steel A151 - C1042 or C1045 (turned and polished).
All bearing plates shall be straightened to plane surfaces.
E 6015 or E 6016 welding electrodes shall be used.
Paint: Shop: One coat red lead except top surface of top plate and bottom surface of bottom plate.
Field: All exposed surfaces first coat brown, second coat aluminum.

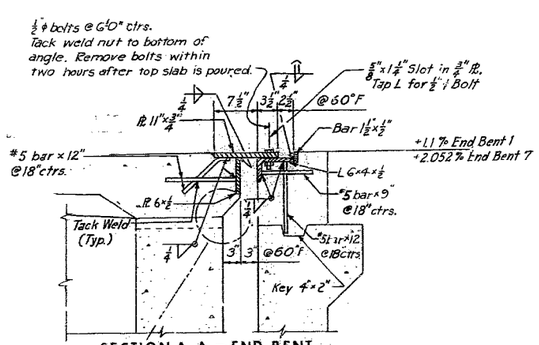

SECTION A-A – END BENT
(End Bent 1 Similar)

Note: #5 bars used as Expansion joint anchors to be structural grade steel.

Note: Backwall to be poured and forms to be removed prior to pouring of top slab of box girder.

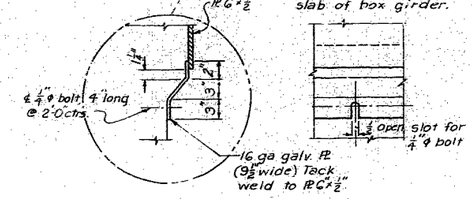

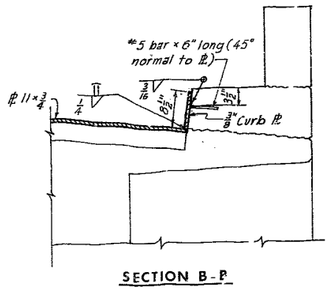

SECTION B-B

EXPANSION ROLLER

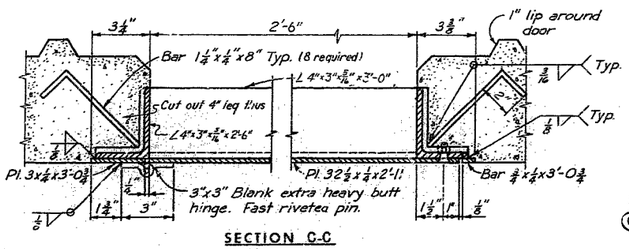

SECTION C-C

Note:
Access Doors to be assembled and in place while slab is being poured.
Bottom surface of door to be flush with bottom of slab.

Payment for furnishing and placing access doors and frames shall be made and considered fully covered under price bid for Fabricated Structural Carbon Steel.

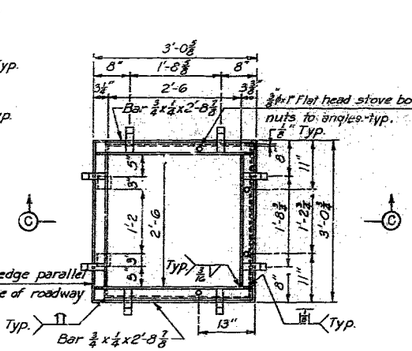

PLAN

BOTTOM SLAB ACCESS DOOR DETAILS

No. of doors required (6)
Note: Weight of one door and frame is approximately 181 lbs.

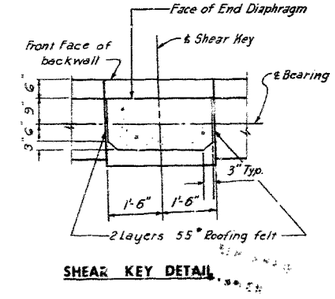

SHEAR KEY DETAIL

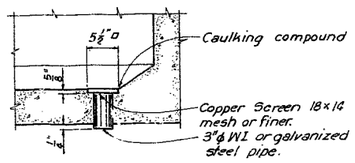

Note:
If galvanized steel pipe is used, the screen shall be aluminum.
Cost of furnishing and placing pipe, screen, and caulking compound shall be included in price bid for other items of work.

BOTTOM SLAB DRAIN

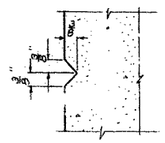

RUSTICATION DETAIL

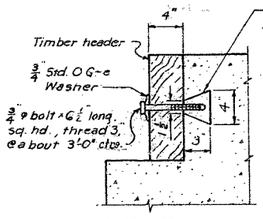

Note: Cost of timber headers, complete in place, to be included in unit price bid for concrete.

TIMBER HEADER DETAIL

HOWARD, NEEDLES, TAMMEN & BERGENDOFF
CONSULTING ENGINEERS
KANSAS CITY NEW YORK

BASE	JEW	DATE 11-25-41	TRACED		DATE
CHECKED	LJR	DATE 11-25-41	SCALE		

NOTE: This drawing is not to scale. Follow dimensions.

SHEET 18 OF 19

BRIDGE: RAMP "G" OVER RTE. I-70 & RAMP "H"

STATE ROAD - ROUTES I-435 & I-70 INTERCHANGE
FROM ROUTE 40 TO LEEDS ROAD
PROJECT NO. I-435-1(24)(RTE. I-435) STA. 11+49.41 (℄ RAMP "G")

JACKSON COUNTY

A-991

309

MISSOURI STATE HIGHWAY DEPARTMENT

FED. ROAD DIST. NO.	STATE	FEDERAL PROJECT NO. & SEC.	FISCAL YEAR	SHEET NO.	TOTAL SHEETS
5	MO.			55	
DIST. NO.	COUNTY		ROUTE	SEC.	
4	JACKSON				

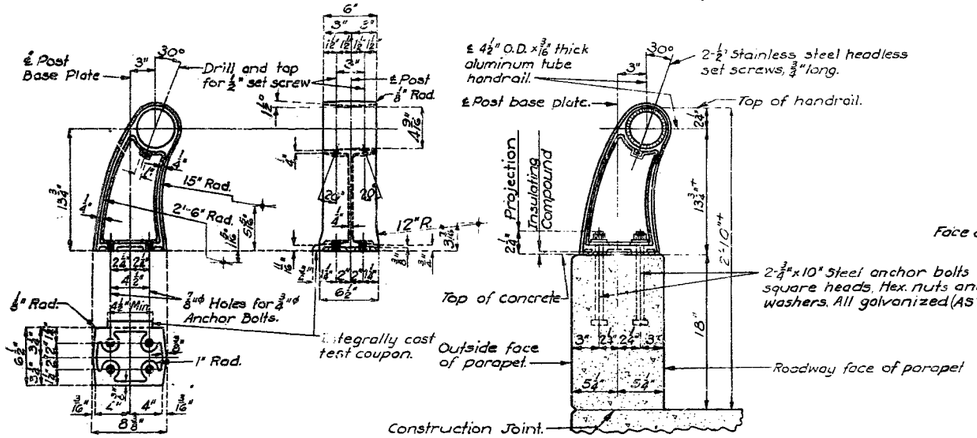

HANDRAIL POST

SECTION THRU HANDRAIL

SINGLE TUBE ALUMINUM RAILING

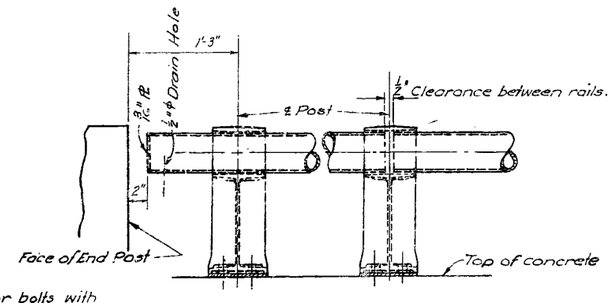

POST RAIL SPLICE OR EXP.

TYPICAL HANDRAIL DETAILS

Note: All handrail posts shall be set normal to grade.

Aluminum tube handrail shall be bent to conform to vertical and horizontal alignment of parapet.

Aluminum washer shims between top of parapet and post base may be used for adjusting handrail alignment. Maximum thickness of shims to be ⅛". Where more fitting of post is required for proper alignment, concrete bearing areas shall be ground down.

All parts of handrail, except anchor bolts, nuts, washers, and set screws are to be of aluminum material.

The contract unit price per linear foot of "Bridge Rail (Single Tube Type)" shall include furnishing and erecting the handrail complete with anchor bolts, shims and Insulating Compound.

All fillets ¼" except as noted.

All draft 3° except as noted.

Pipe rail to be fabricated in two or three panel lengths unless otherwise approved.

Omit set screw on side near filled joint in parapet at all expansion posts.

Top of curbs and parapets to be built parallel to grade. Vertical faces of end posts to be vertical.

All exposed edges of end posts and parapets to be beveled ½".

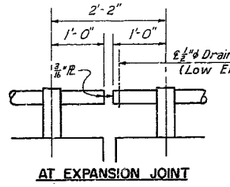

AT EXPANSION JOINT

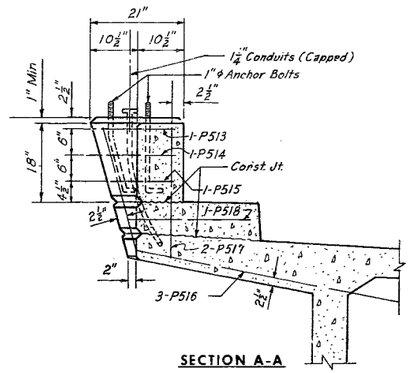

SECTION A-A

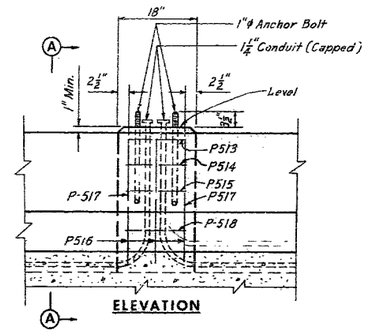

ELEVATION

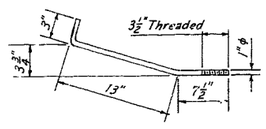

4 of each type required

ANCHOR BOLTS

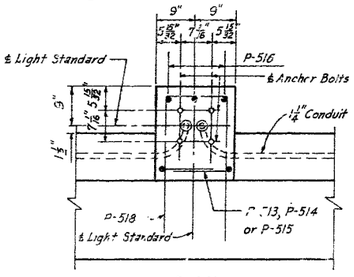

PLAN

Note:
Bolts shall be furnished complete with 2 Standard Hex. Nuts and Washers, all galvanized. Payment for furnishing and installing bolts shall be included in price bid for other items.

DETAILS OF LIGHT STANDARD SUPPORT

BRIDGE: RAMP "G" OVER RTE. I-70 & RAMP "H"

STATE ROAD - ROUTES I-435 & I-70 INTERCHANGE
FROM ROUTE 40 TO LEEDS ROAD
PROJECT NO. I-435-1(24)(RTE. I-435; STA. 11+49.41 (℄ RAMP "G")

JACKSON COUNTY

A-991

HOWARD, NEEDLES, TAMMEN & BERGENDOFF
CONSULTING ENGINEERS
KANSAS CITY NEW YORK

MADE JLW	DATE 3-6-62	TRACED	DATE
CHECKED LJR	DATE 3-9-62	SCALE	

NOTE: This drawing is not to scale. Follow dimensions.

SHEET 19 OF 19

310

MISSOURI STATE HIGHWAY DEPARTMENT

FED. ROAD DIV. NO.	STATE	FEDERAL PROJECT NO. & SEC.	FISCAL YEAR	SHEET NO.	TOTAL SHEETS
5	MO	I-435-1(24)18		37	
DIST. NO.	COUNTY				SEC.
4	JACKSON			2405	

FINAL PLANS

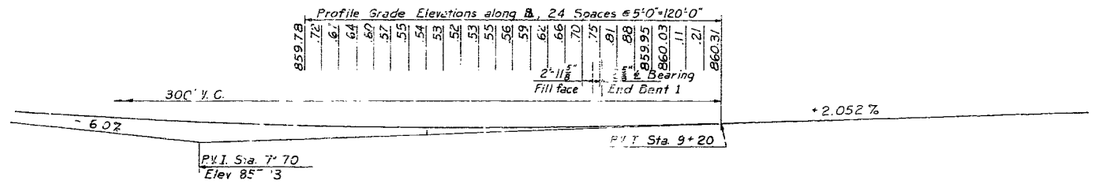

BENCH MARKS

B.M. 871.16 ⌀ on E. End N. Wing Sidewalk Bt #7
B.M. 862.46 ⌀ on N. End W. Wing Sidewalk Bt #1

PROFILE GRADE

75', 85', 85', 100', 75', 60' CONTINUOUS CONCRETE BOX GIRDER SPANS

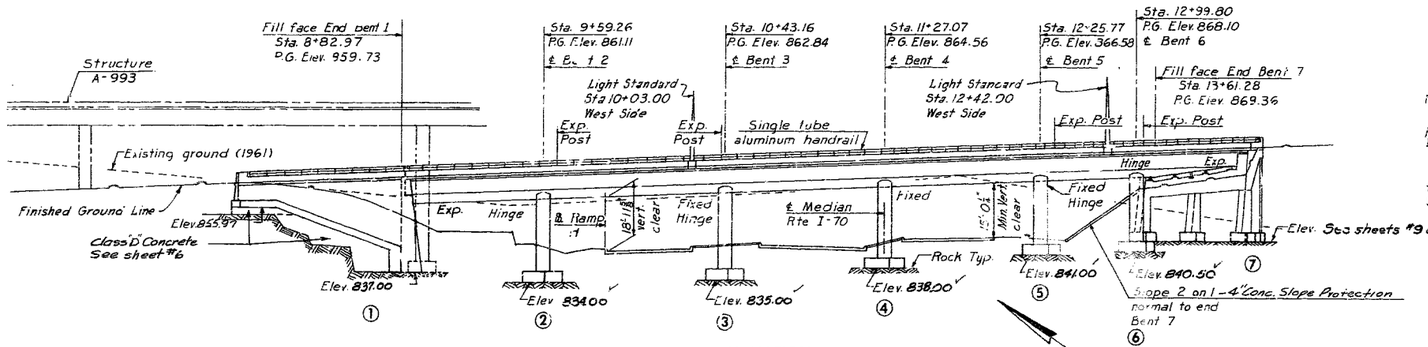

GENERAL ELEVATION

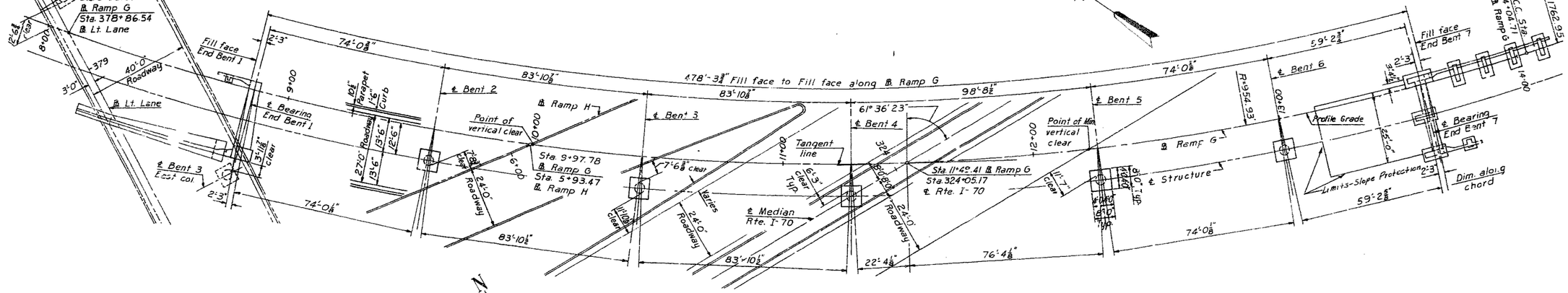

PLAN

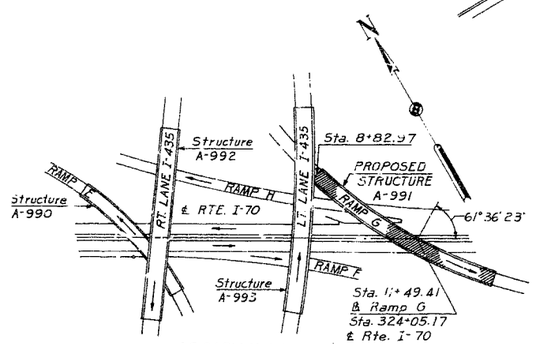

LOCATION SKETCH

CURVE DATA ℄ RAMP G

P.I. Sta. 9+32.01	P.I. Sta. 17+34.50
Δ 64° 32' 33.5"	Δ 21° 11' 28.5"
D 6°	D 3° 15"
T 603.01	T 329.79
L 1075.71	L 652.04
R 954.93	R 1762.95
SE .08'/ft.	SE .06'/ft.

Notes:
Bents **were not** located from the reference point on the tangent by conventional survey methods based on 100' chords.
All dimensions shown are horizontal.
Roadway excavation **was** completed adjacent to this site before substructure is started. See Special Provisions.

SUBMITTED BY: [signature]
REGISTERED PROFESSIONAL ENGINEER
MISSOURI NO. E-253

FINISHED

BRIDGE: RAMP "G" OVER RTE. I-70 & RAMP "H"

STATE ROAD - ROUTES I-435 & I-70 INTERCHANGE
FROM ROUTE 40 TO LEEDS ROAD
PROJECT NO. I-435-1(24)(RTE. I-435) STA. 11+49.41 (℄ RAMP "G")

JACKSON COUNTY

FINISHED

SUBMITTED BY [signature] BRIDGE ENGINEER DATE 7-22-63
APPROVED BY [signature] CHIEF ENGINEER DATE 7-22-63

STD. 54.00
A-991

HOWARD, NEEDLES, TAMMEN & BERGENDOFF
CONSULTING ENGINEERS
KANSAS CITY NEW YORK

MADE LWL	DATE 2-21-62	TRACED	DATE
CHECKED JLW	DATE 2-21-62	SCALE	

NOTE: This drawing is not to scale. Follow dimensions.

SHEET NO. 8 OF 8

311

FINAL PLANS

MISSOURI STATE HIGHWAY DEPARTMENT

FED. ROAD SYS. NO.	STATE	FEDERAL PROJECT NO. & SEC.	FISCAL YEAR	SHEET NO.	TOTAL SHEETS
5	MO	I-435-1(24)18		38	
DIST. NO.	COUNTY			ROUTE	SEC.
4	JACKSON			I-435	

FINAL PLANS

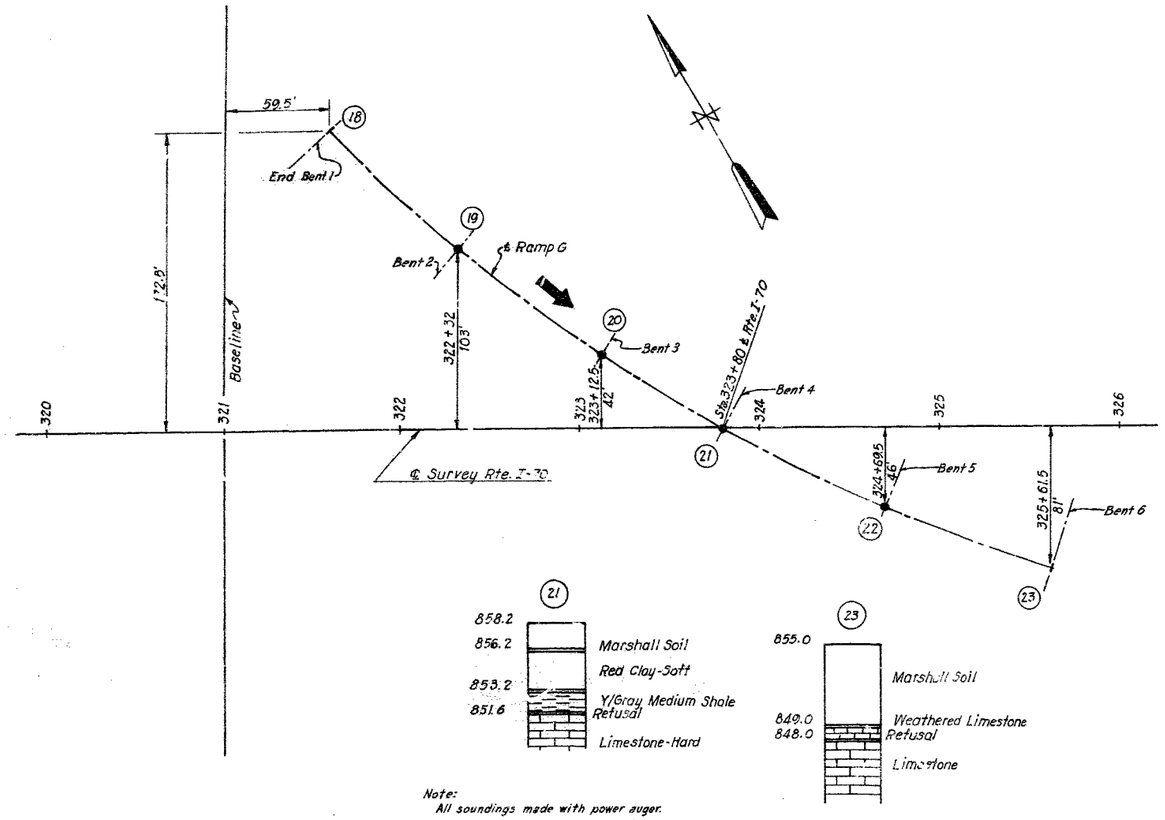

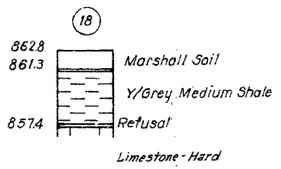

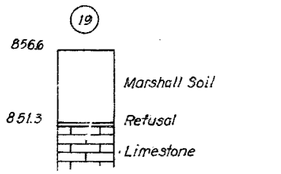

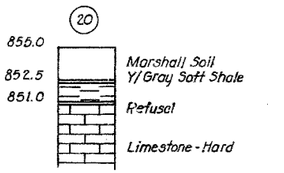

Note:
All soundings made with power auger.

LOG OF SOUNDINGS

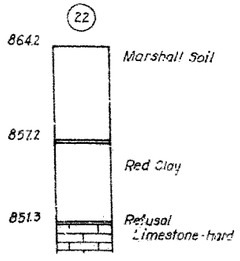

QUANTITIES				
ITEM	UNIT	SUBSTR.	SUPERSTR.	TOTAL
Class 1 Excavation for Structures	Cu. Yd.	576.0		576.0
Class B Concrete	Cu. Yd.	349.6		349.6
Class B1 Concrete	Cu. Yd.		1011.1	1011.1
Reinforcing Steel	Lbs.	45,460	466,030	511,550
Fabricated Structural Carbon Steel	Lbs.		5940	5940
Bridge Rail (Single Tube Type)	Lin. Ft.		1086	1086
Conduit System	L. S.		1	1
Test holes (CONTINGENT)	Lin Ft.	134		134
Class 1 +25% "	Cu. Yd.	159.5		159.5
Class D Conc. "	Cu yd.	8.1		8.1

GENERAL NOTES

Design Specifications

A.A.S.H.O. 1961.

Design Loading

H20-S16-44 with 15#/sq.ft. future wearing surface. (Modified 24,000# Tandem Axles.)

Concrete

Concrete Stress - Class B1 fc = 1,600 p.s.i.
Class B fc = 1,200 p.s.i.
Concrete for superstructure was Class B1 air-entrained. Concrete for substructure was Class B air-entrained.

Reinforcing Steel

Allowable stress 20.000 p.s.i. All splices in reinforcing steel were #32 bar diameters.
Bar sizes are designated on the plans by numbers. The first digit after the letter in three digit marks and the first two digits after the letter in four digit marks indicate the size of bar.
Dimensions shown on the plans from the reinforcing steel to outside edge of concrete are all clear dimensions.
All bending dimensions are from "out to out" of bars.

Joint Filler

Where joint filler is specified on the plans it did conform with the requirements for grey sponge rubber compound joints as given in Section 157.2.4 of the Standard Specifications.

Metal Conduits

Expansion fittings were required in steel conduit at all expansion joints. Expansion fittings were O. Z. Electrical Manufacturing Company type AX-125 with AJ bonding jumper.

Sealing of Decks

Superstructure deck was surface sealed. See Special Provisions.

Utilities

All utilities, unless shown otherwise, were removed or relocated by others. The Contractor did notify the owner of the utilities of his work schedule sufficiently in advance to allow time for the disposition of utilities.

Shipping

Permits were obtained for all truck loads over legal length.

Excavation in Rock

All loose, shelly or disintegrated rock was removed and footings placed on hard, solid, undisturbed rock. If soft rock or shale was encountered, the footings were carried at least 18" into and cast against vertical faces of same. In no case were the footings placed higher than elevations shown. Bearing of 12 tons per sq.ft. was used in design of footings.

Plastic Waterstop

Plastic Waterstop was in accordance with Section 157.2.1 of the Standard Specifications.

Painting

Paint: Shop none, except as noted for bearings; Field, three coats of red lead for surfaces inaccessible after erection. All other exposed surfaces except as noted for bearings first coat red lead, second coat brown, third coat aluminum except that final coat on access doors and frames were gray. Payment for paint, cleaning and painting such surfaces was included in unit price bid for Fabricated Structural Carbon Steel.

FINISHED

Quantity Notes

Class 1 Excavation for Structures was measured from the existing ground line or from the lower limits of roadway excavation, whichever is lower, regardless of the sequence of operations or method of removal.
All excavation for bridge was paid for as Class 1 Excavation for Structures. Sketches show limits of excavation for pay purposes.
All concrete and reinforcement at intermediate bents above top of footing are included in superstructure quantities.
Estimated quantity of Class B concrete substructure includes all concrete in End Bents and intermediate bent footings. All other concrete is included in estimated quantity of Class B1 concrete.
Weight of bearings is included in weight of Fabricated Structural Carbon Steel.

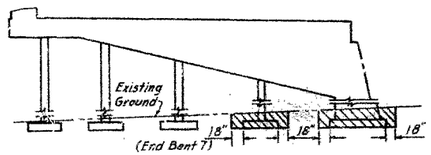

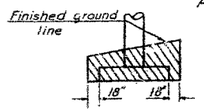

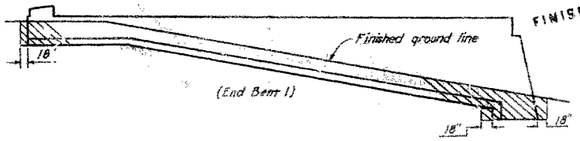

FINISHED

BRIDGE: RAMP "G" OVER RTE. I-70 & RAMP "H"

STATE ROAD - ROUTES I-435 & I-70 INTERCHANGE
FROM ROUTE 40 TO LEEDS ROAD
PROJECT NO. I-435-1(24)(RTE. I-435) STA. 11+49.41 (℄ RAMP "G")

JACKSON COUNTY FINISHED

A-991

HOWARD, NEEDLES, TAMMEN & BERGENDOFF
CONSULTING ENGINEERS
KANSAS CITY NEW YORK

DRAWN JGW DATE 3-6-62 | TRACED DATE
CHECKED LJR DATE 3-9-62 | SCALE

NOTE: This drawing is not to scale. Follow dimensions.

SHEET 2A

3/2

FINAL PLANS

MISSOURI STATE HIGHWAY DEPARTMENT

FED. ROAD DIST. NO.	STATE	FEDERAL PROJECT NO. & SEC.	FISCAL YEAR	SHEET NO.	TOTAL SHEETS
5	MO	F-435-1(24)18		41	
DIST. NO.	COUNTY		ROUTE	SEC.	
4	JACKSON		F-435		

FINAL PLANS

313

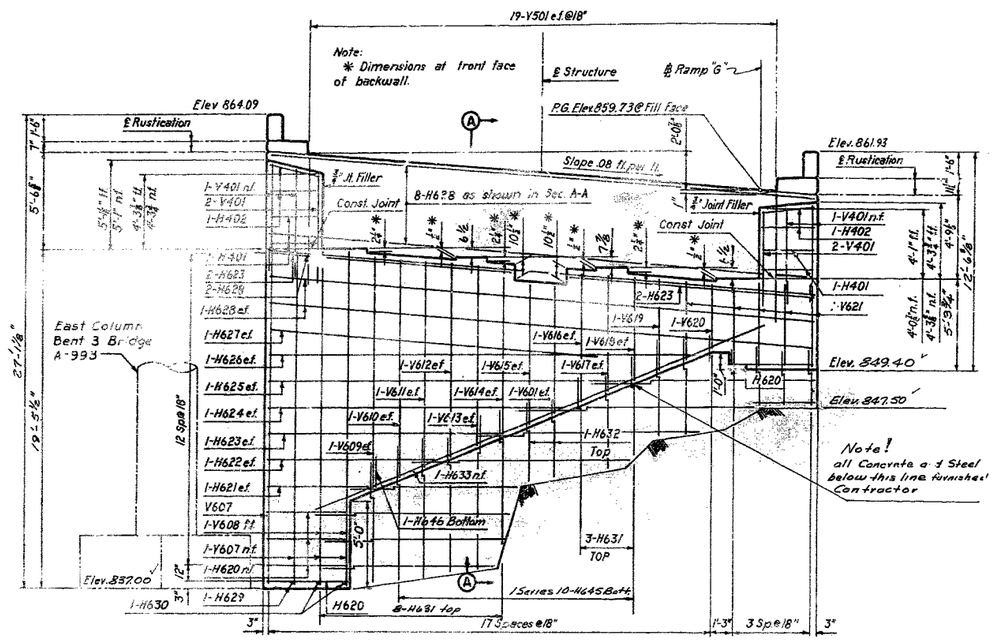

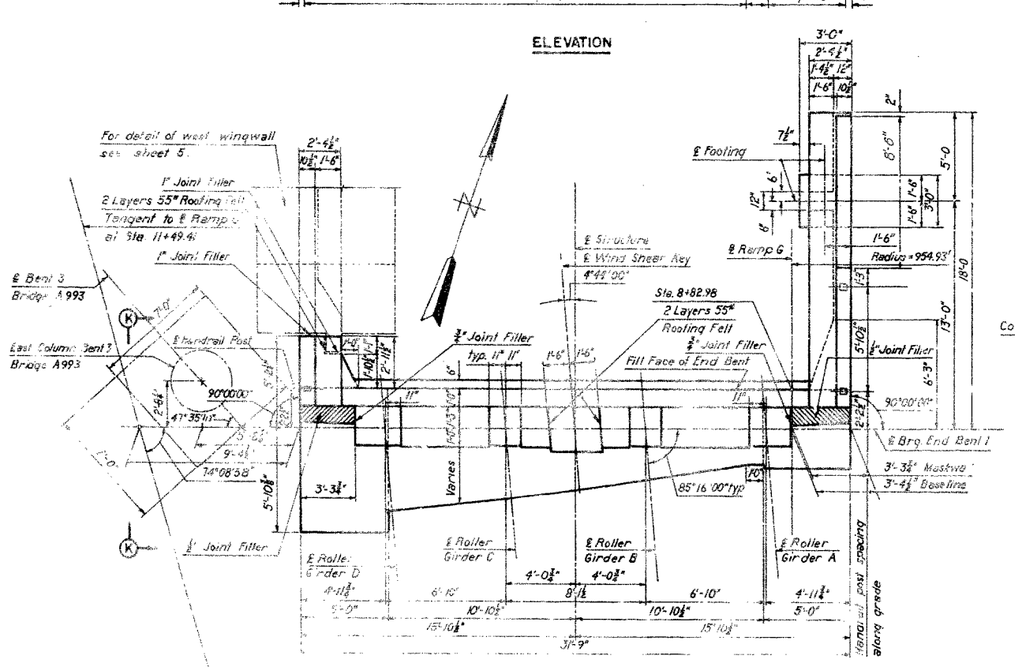

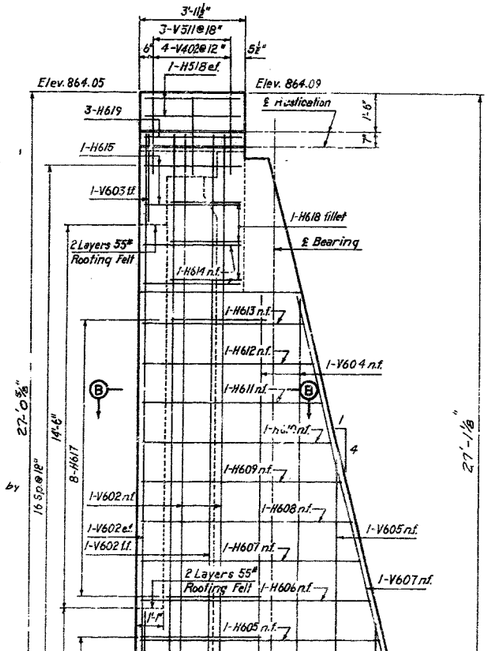

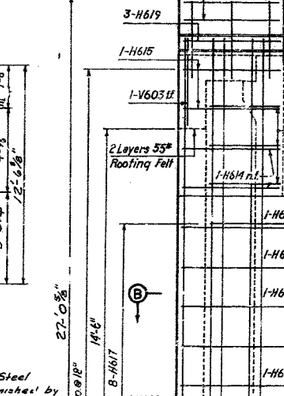

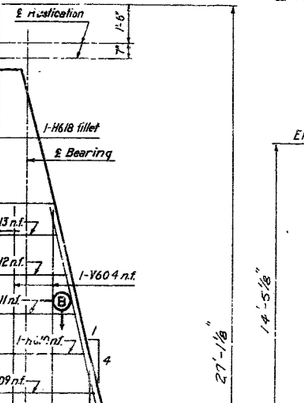

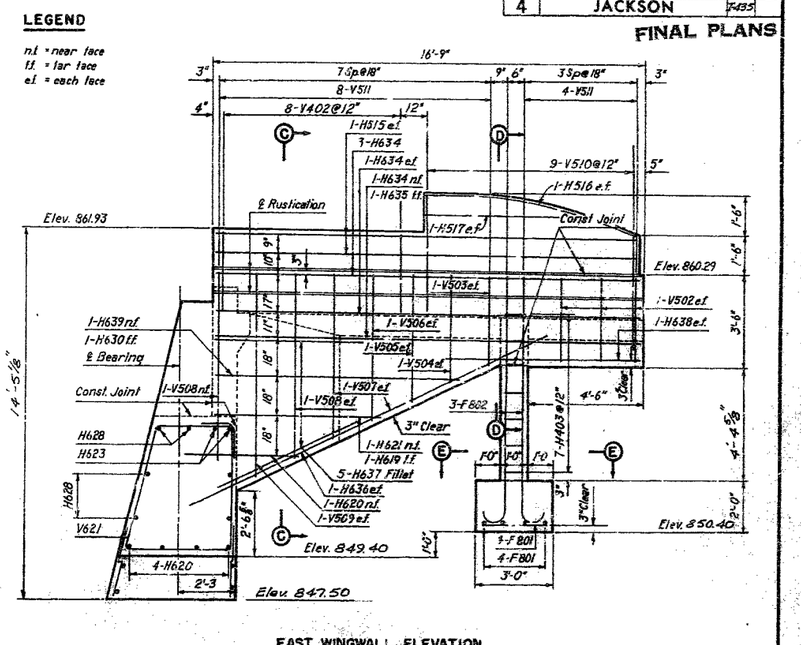

HOWARD, NEEDLES, TAMMEN & BERGENDOFF
CONSULTING ENGINEERS
KANSAS CITY

NOTE: This drawing is not to scale. Figured dimensions govern.

DETAILS END BENT 1

SHEET 5A OF 8

FINISHED

BRIDGE: RAMP "G" OVER RTE. I-70 & RAMP "H"

STATE ROAD - ROUTES I-435 & I-70 INTERCHANGE
FROM ROUTE 40 TO LEEDS ROAD
PROJECT NO. I-435-1(24)18 RTE. I-435 STA. 11+49.41 ℄ RAMP G

JACKSON COUNTY

FINISHED

FINAL PLANS

MISSOURI STATE HIGHWAY DEPARTMENT

FED. HIGHWAY PROJ. NO.	STATE	FEDERAL PROJECT NO. & SEC.	FISCAL YEAR	SHEET NO.	TOTAL SHEETS
5	MO	I-435-1(24)18		42	
DIST. NO.	COUNTY			ROUTE	SEC.
4	JACKSON			I-435	

Note:
Cost of coarse aggregate was included in price bid for other items of work.

FINAL PLANS

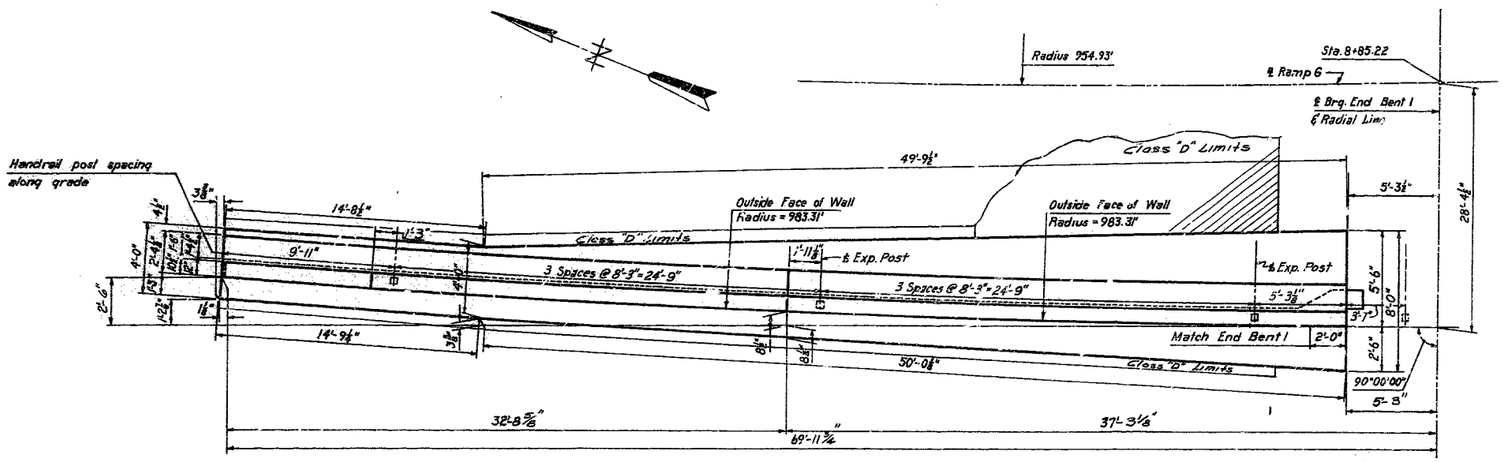

WEST WINGWALL FOOTING PLAN

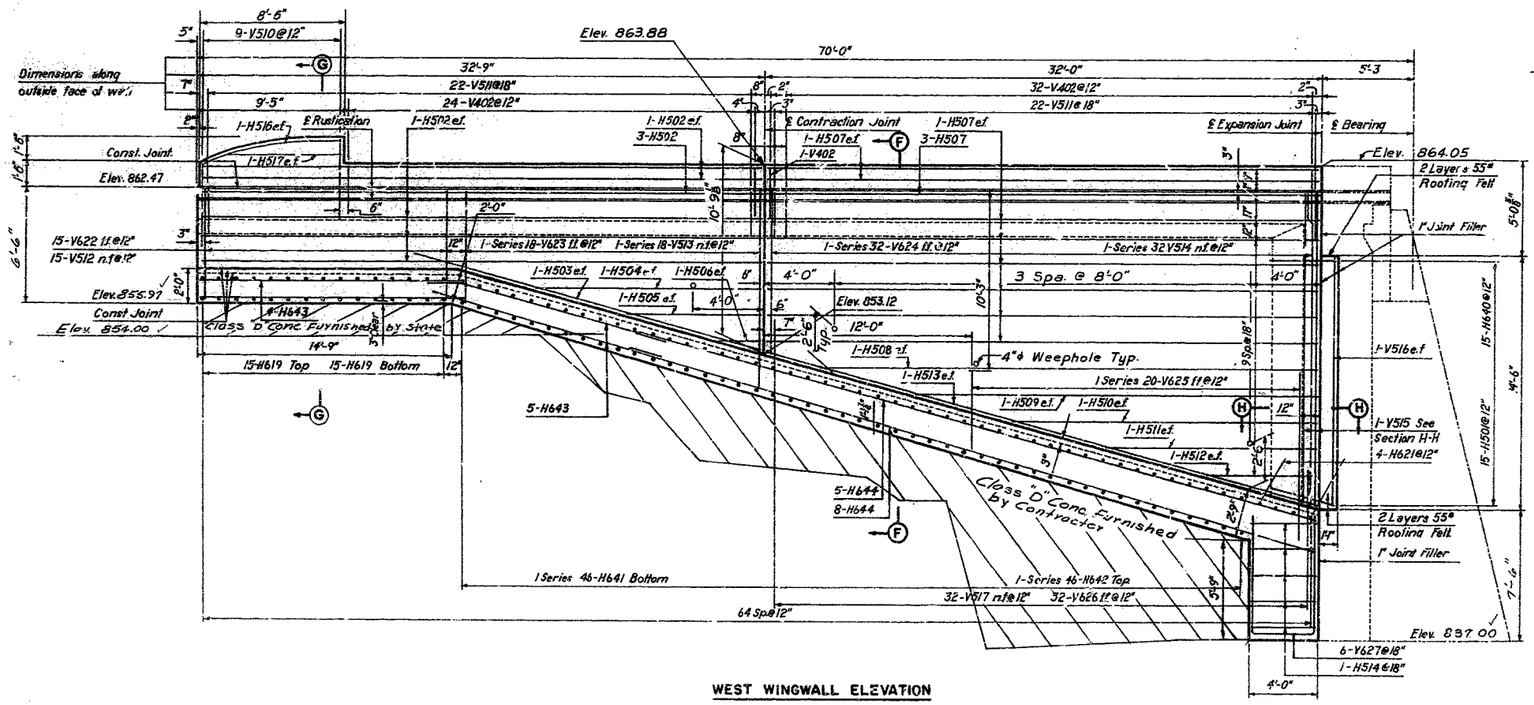

WEST WINGWALL ELEVATION

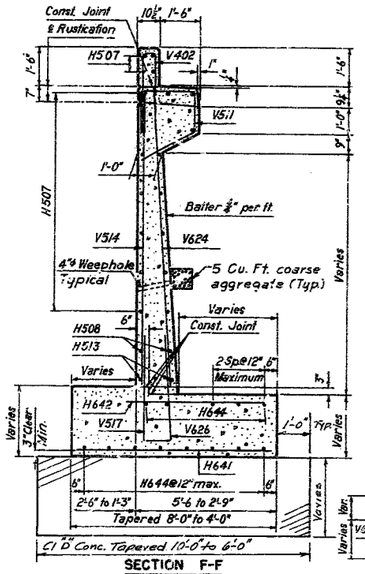

SECTION F-F

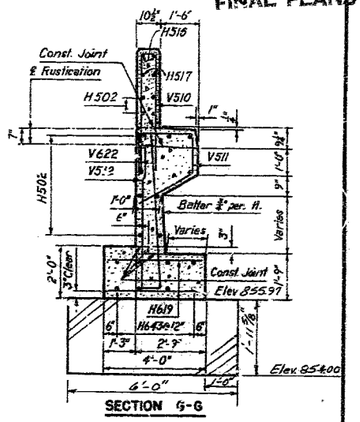

SECTION G-G

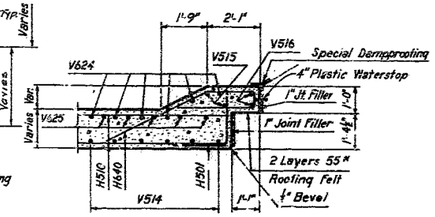

SECTION H-H

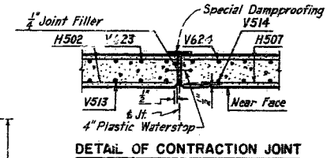

DETAIL OF CONTRACTION JOINT

Note:
Special Dampproofing did extend from bottom of wall to 1'-9" below top of curb.
Plastic Waterstop did extend from bottom of wall to 6" below top of curb. Cost of furnishing and placing waterstop included in the unit price bid for concrete.

Note:
Dimensions to surfaces receiving joint filler are to face of concrete unless noted otherwise.
4" Plastic waterstop was placed in 14'-6" key and in top section of wall to 6" below top of curb.
Cost of furnishing and placing waterstop included in unit price bid for concrete.
Special dampproofing did extend from bottom of wall to 1'-9" below top of curb.

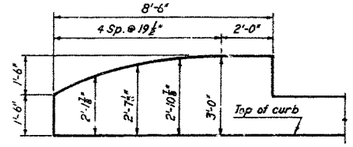

END POST ORDINATES

LEGEND
n.f. = near face
f.f. = far face
e.f. = each face

FINISHED

BRIDGE: RAMP "G" OVER RTE. I-70 & RAMP "H"

STATE ROAD - ROUTES I-435 & I-70 INTERCHANGE
FROM ROUTE 40 TO LEEDS ROAD
PROJECT NO. I-435-1(24)(RTE. I-435) STA. 11+49.41 (℄ RAMP "G")
JACKSON COUNTY

FINISHED

HOWARD, NEEDLES, TAMMEN & BERGENDOFF
CONSULTING ENGINEERS
KANSAS CITY NEW YORK

MADE	I.J.R.	DATE	2-21-62	TRACED		DATE	
CHECKED	S.A.L.	DATE	3-6-62	SCALE			

NOTE: This drawing is not to scale. Follow dimensions.

DETAILS END BENT 1

SHEET 14 OF 8

A-991

3/14

FINAL PLANS

MISSOURI STATE HIGHWAY DEPARTMENT

FED. ROAD DIV. NO.	STATE	FEDERAL PROJECT NO. & SEC.	FISCAL YEAR	PROJECT NO.	TOTAL SHEETS
5	MO	I-435-1(24)18		43	
DIST. NO.	COUNTY		ROUTE	SEC.	
4	JACKSON		I-435		

FINAL PLANS

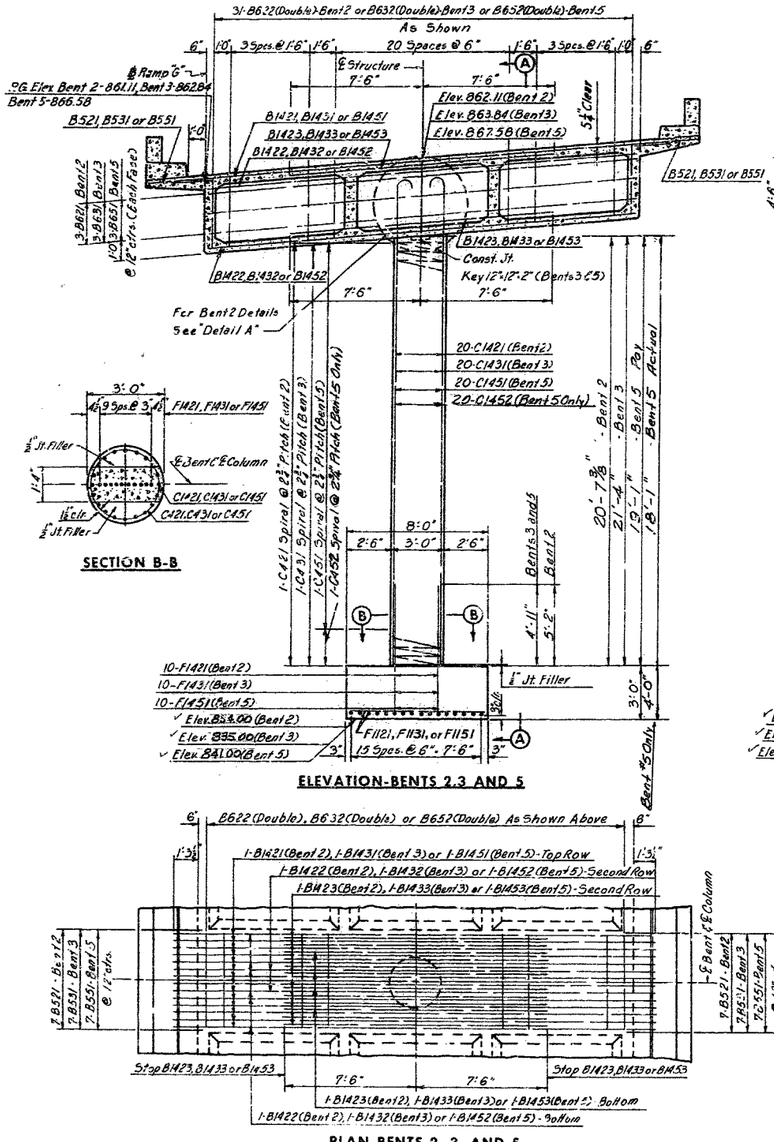

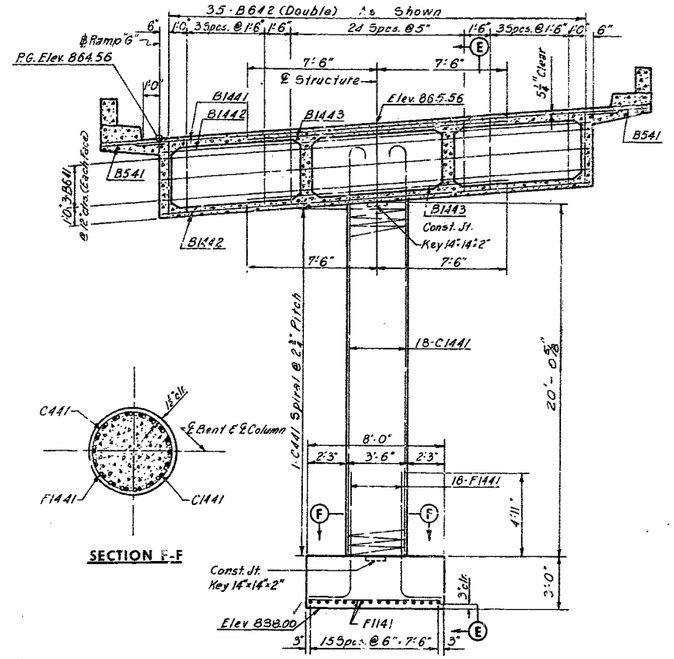

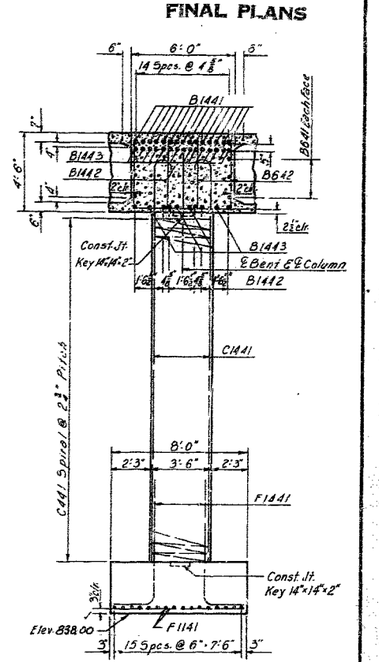

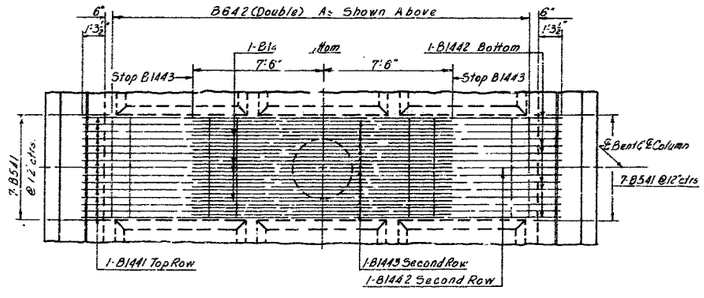

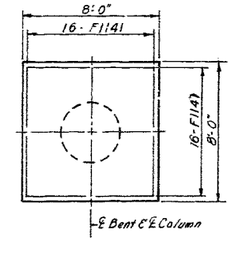

DETAILS OF INT. BENT 4

HOWARD, NEEDLES, TAMMEN & BERGENDOFF
CONSULTING ENGINEERS
KANSAS CITY NEW YORK

MADE S.A.L.	DATE 3-6-62	TRACED	DATE
CHECKED J.L.W.	DATE 3-20-62	SCALE	

FINISHED

BRIDGE: RAMP "G" OVER RTE. I-70 & RAMP "H"

STATE ROAD - ROUTES I-435 & I-70 INTERCHANGE
FROM ROUTE 40 TO LEEDS ROAD
PROJECT NO. I-435-1(24)(RTE. I-435) STA. 11+49.41 (℄ RAMP "G")

JACKSON COUNTY

FINISHED

FINISHED

SHEET 8 OF 8

A-991

315

FINAL PLANS

MISSOURI STATE HIGHWAY DEPARTMENT

FED. ROAD DIV. NO.	STATE	FEDERAL PROJECT NO. & SEC.	FISCAL YEAR	SPLIT NO.	TOTAL SHEETS
5	MO	I-435-1(24)18			44
DIST. NO.	COUNTY			STATE	SEC.
4	JACKSON			I-435	

FINAL PLANS

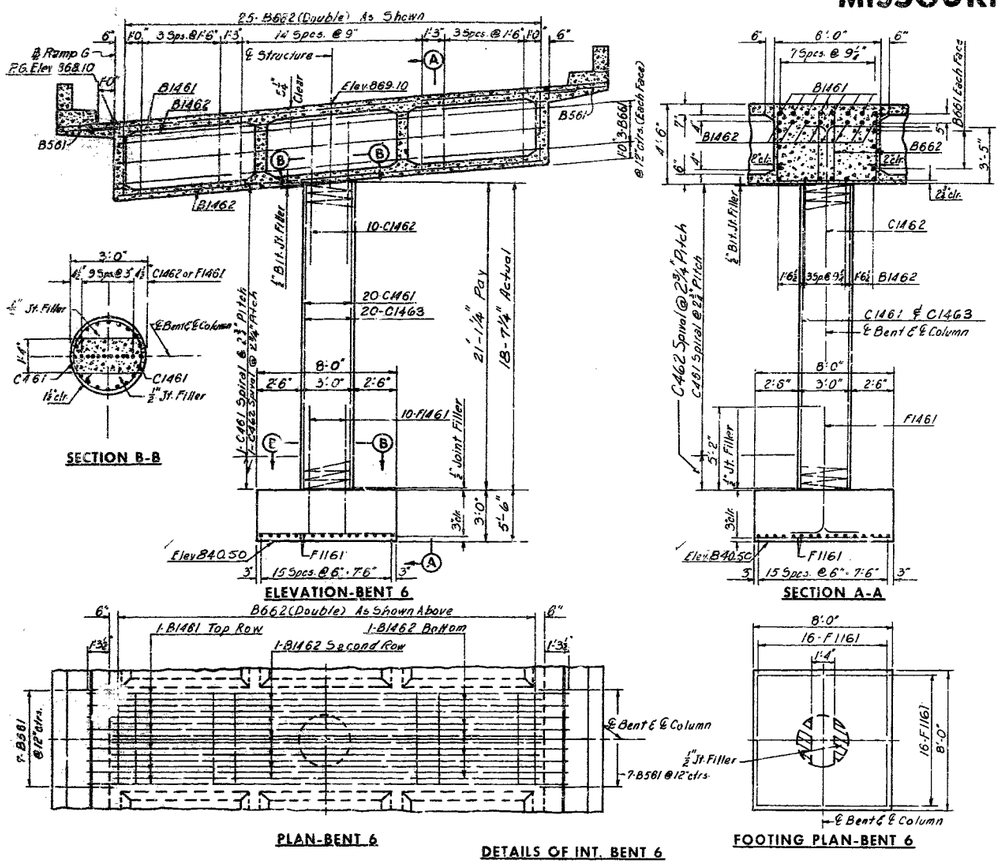

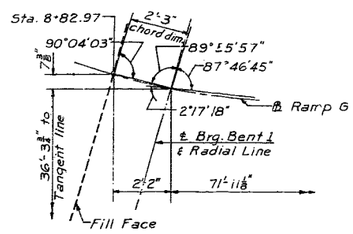

DETAIL C

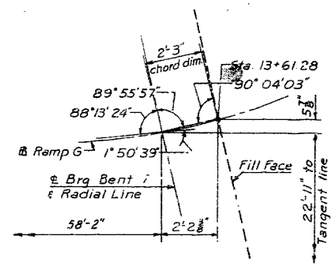

DETAIL D

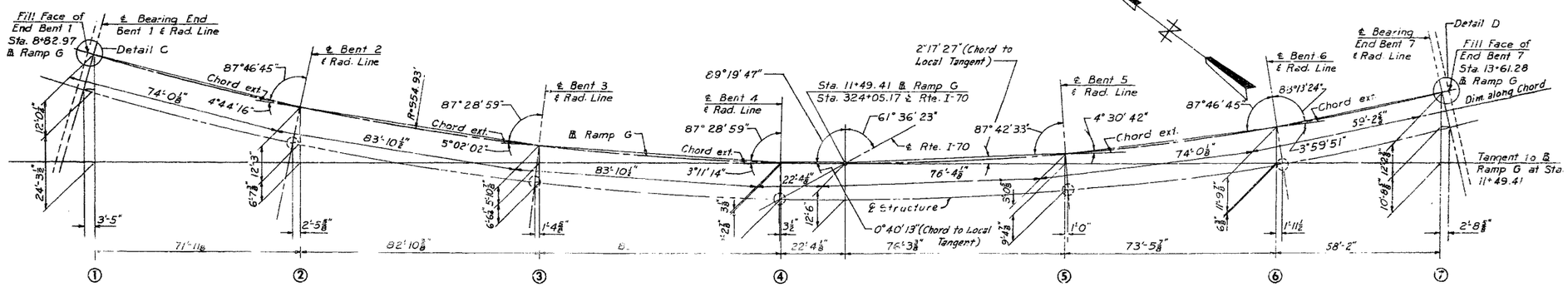

Note: All dimensions shown are horizontal

LAYOUT DATA FOR SUBSTRUCTURE

FINISHED

BRIDGE: RAMP "G" OVER RTE. I-70 & RAMP "H"

STATE ROAD - ROUTES I-435 & I-70 INTERCHANGE
FROM ROUTE 40 TO LEEDS ROAD
PROJECT NO. I-435-1(24)(RTE. I-435) STA. 11+49.41 (℄ RAMP "G")

JACKSON COUNTY

FINISHED

A-991

HOWARD, NEEDLES, TAMMEN & BERGENDOFF
CONSULTING ENGINEERS
KANSAS CITY NEW YORK

MADE	SAI CLWL	DATE	2-8-62	TRACED		DATE	
CHECKED	JHW	DATE	3-20-62	SCALE			

NOTE: This drawing is not to scale. Follow dimensions.

SHEET 8A OF 8

FINISHED

FINAL PLANS

316

MISSOURI STATE HIGHWAY DEPARTMENT

FED. ROAD DIST. NO.	STATE	FEDERAL PROJECT NO. & SEC.	FISCAL YEAR	SHEET NO.	TOTAL SHEETS
5	MO	I-435-1(24)18		45	
DIST. NO.	COUNTY			ROUTE	SEC.
4	JACKSON			I-435	

FINAL PLANS

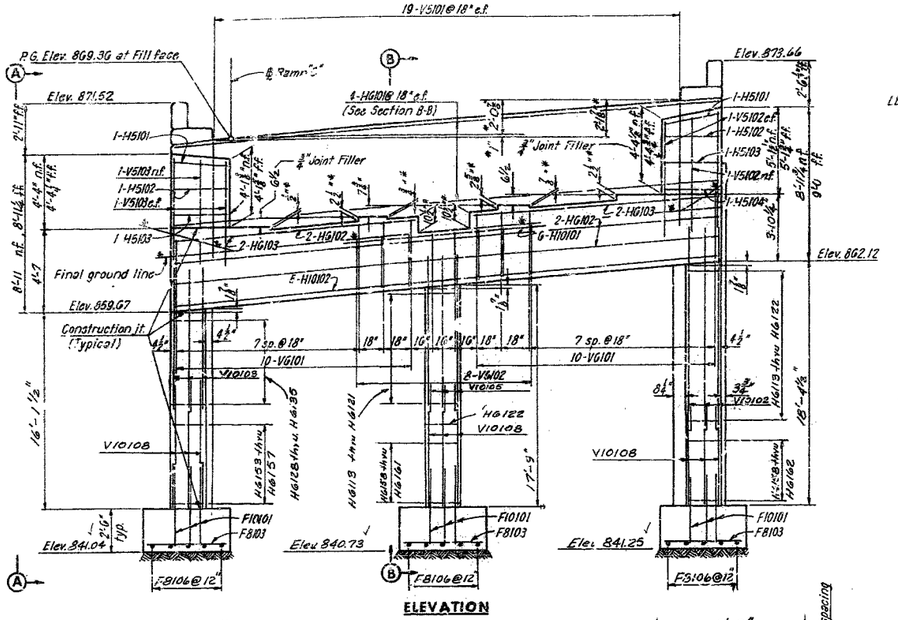

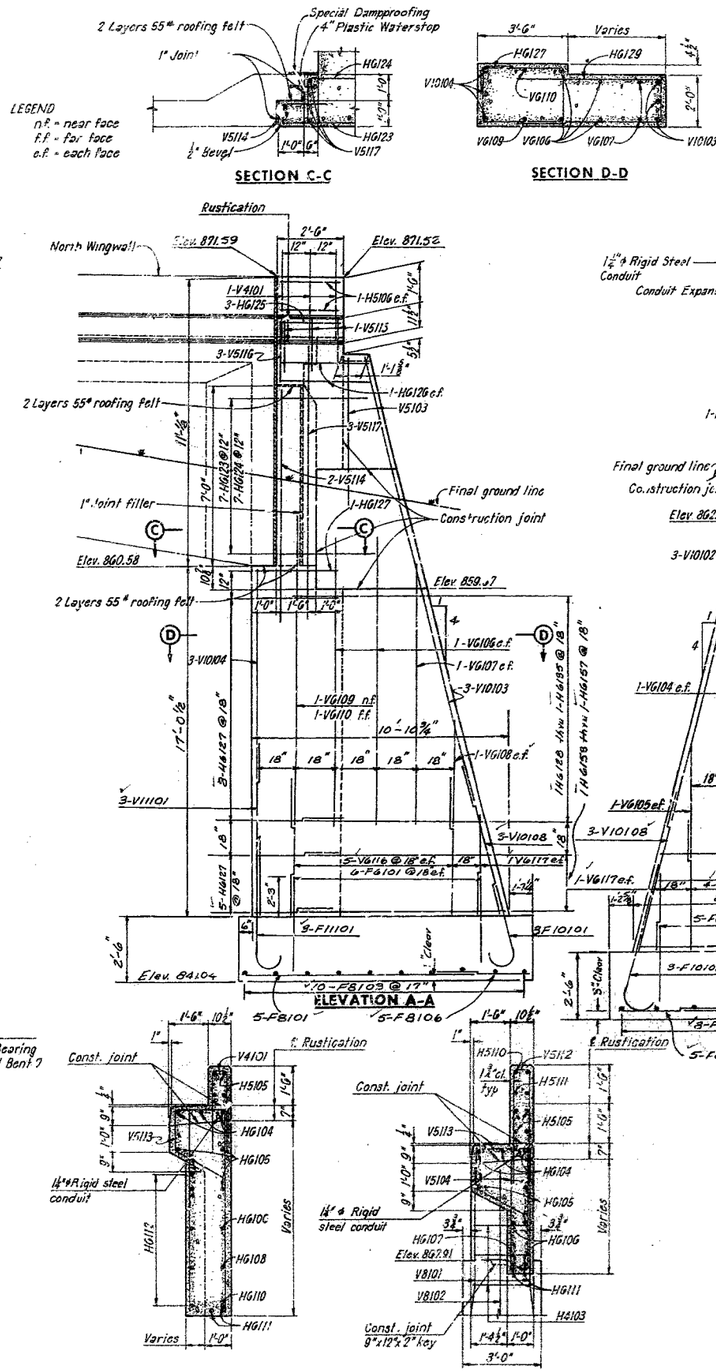

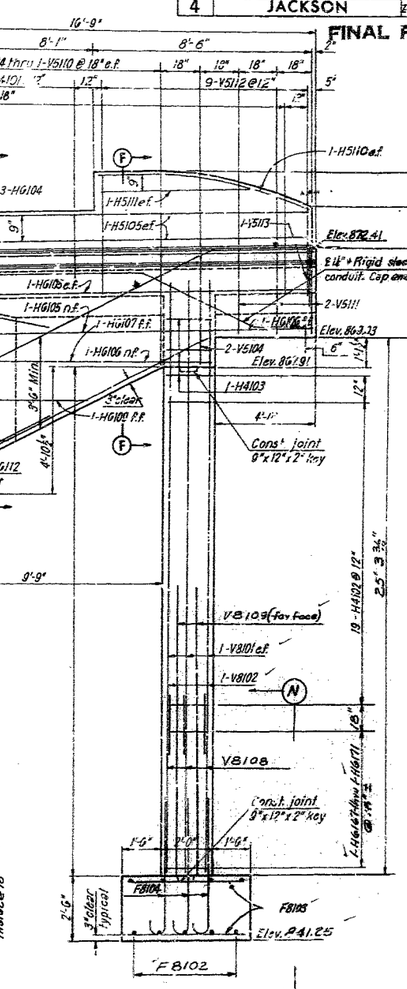

317

HOWARD, NEEDLES, TAMMEN & BERGENDOFF
CONSULTING ENGINEERS
KANSAS CITY NEW YORK

MADE GLC	DATE 2-12-62	TRACED	DATE
CHECKED S.H.L.	DATE 3-12-62	SCALE	

NOTE: This drawing is not to scale. Follow dimensions.

DETAILS OF END BENT 7

SECTION E-E

SECTION F-F

FINISHED

BRIDGE: RAMP "G" OVER RTE. I-70 & RAMP "H"

STATE ROAD - ROUTES I-435 & I-70 INTERCHANGE
FROM ROUTE 40 TO LEEDS ROAD
PROJECT NO. I-435-1(24), RTE. I-435, STA. 11+49.41 (℄ RAMP "G")

JACKSON COUNTY

FINISHED

A-991

FINAL PLANS

MISSOURI STATE HIGHWAY DEPARTMENT

FED. ROAD DIST. NO.	STATE	FEDERAL PROJECT NO. & SEC.	FISCAL YEAR	SHEET NO.	TOTAL SHEETS
5	MO	I-435-1(24)18		4C	
CONT. SEC.	COUNTY			ROUTE	SEC.
4	JACKSON			I-435	

FINAL PLANS

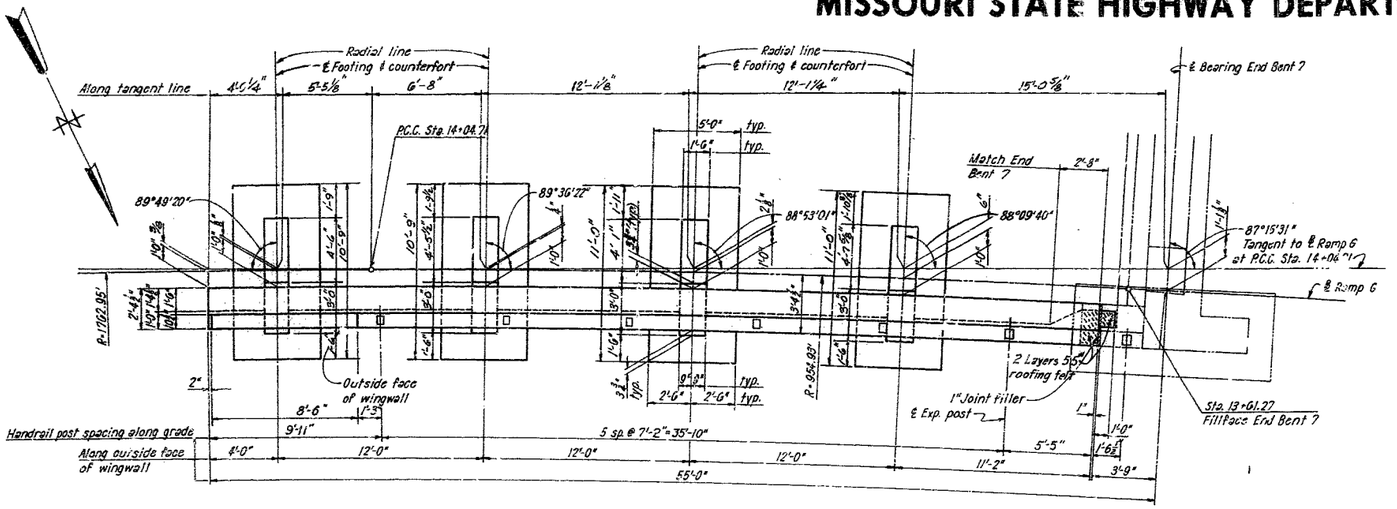

NORTH WINGWALL PLAN

Note: Baseline offsets from the tangent are given along radial lines.

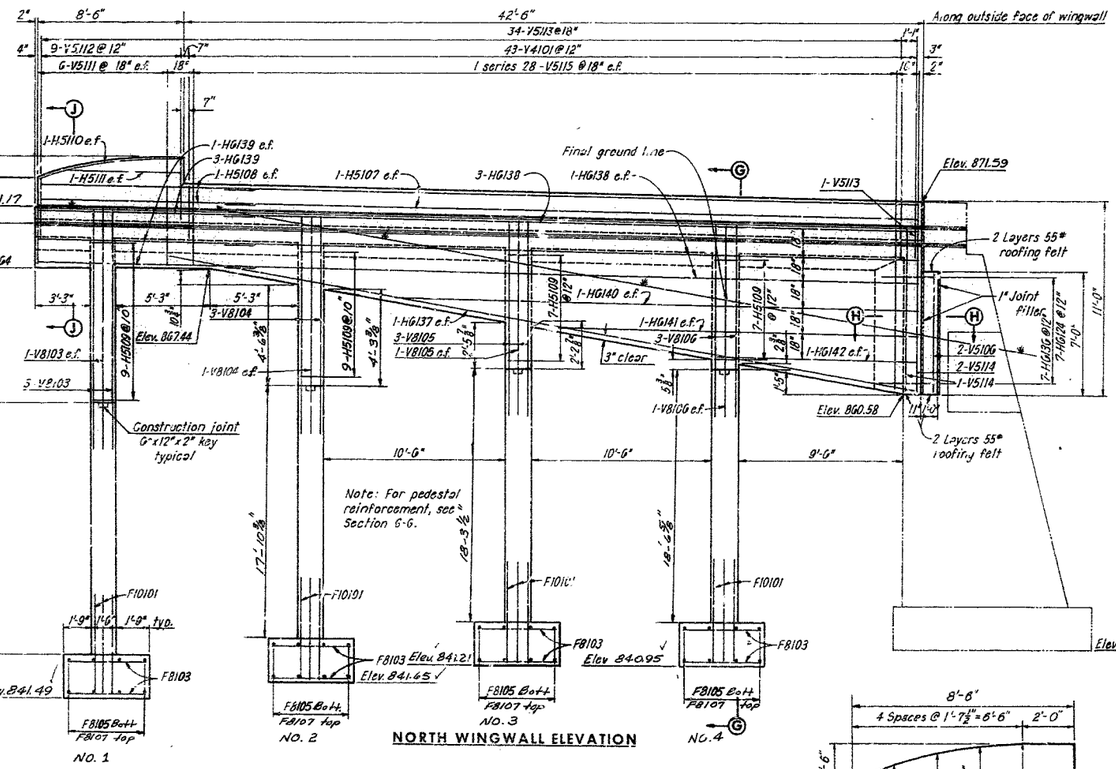

NORTH WINGWALL ELEVATION

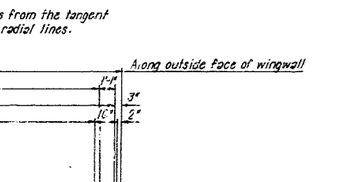

END POST ORDINATES

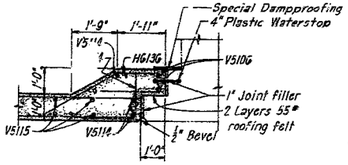

SECTION H-H

Notes:
4" Plastic waterstop was placed in 7'-0" key and in top section of wall to 6" below top of curb.
Cost of furnishing and placing waterstop was included in unit price bid for concrete.
Special dampproofing did extend from bottom of key to 1'-9" below top of curb.

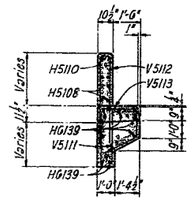

SECTION J-J

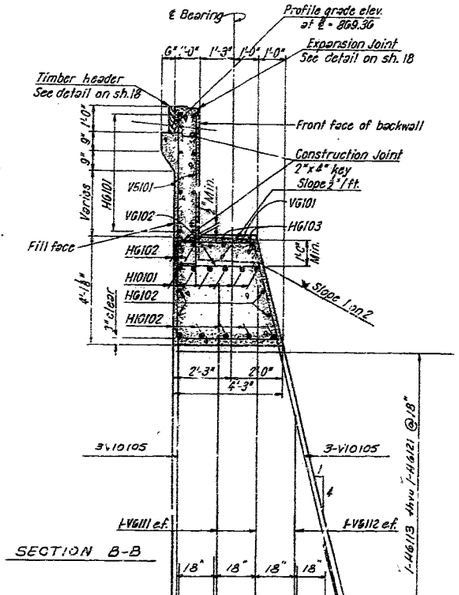

SECTION B-B

SECTION N-N

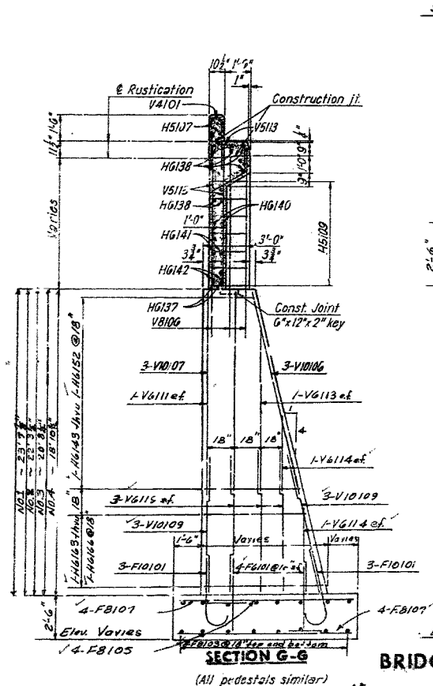

Note:
for End Bent 7 details not shown, see sheet 9

FINISHED

BRIDGE: RAMP "G" OVER RTE. I-70 & RAMP "H"

STATE ROAD - ROUTES I-435 & I 70 INTERCHANGE
FROM ROUTE 40 TO LEEDS ROAD
PROJECT NO. I-435-1(24)(RTE. I-435) STA. 11+40.41 (℄ RAMP "G")

JACKSON COUNTY

FINISHED

A-991

HOWARD, NEEDLES, TAMMEN & BERGENDOFF
CONSULTING ENGINEERS
KANSAS CITY NEW YORK

MADE	GLC	DATE	2-28-62	TRACED		DATE	
CHECKED	S.A.I.	DATE	3-12-62	SCALE			

NOTE: This drawing is not to scale. Follow dimensions.

DETAILS OF END BENT 7

SHEET 10A OF 6

FINAL PLANS

318

MISSOURI STATE HIGHWAY DEPARTMENT

FED. ROAD DIV. NO.	STATE	FEDERAL PROJECT NO.	FISCAL YEAR	SHEET NO.	TOTAL SHEETS
5	MO.				
DIST. NO.	COUNTY		ROUTE	SEC.	
4	JACKSON				

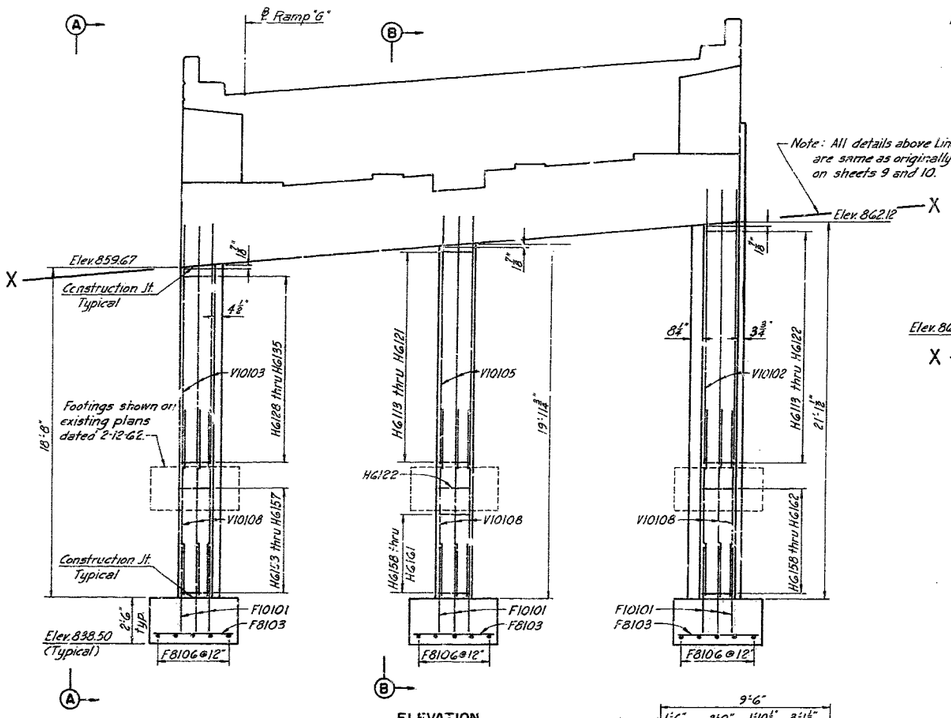

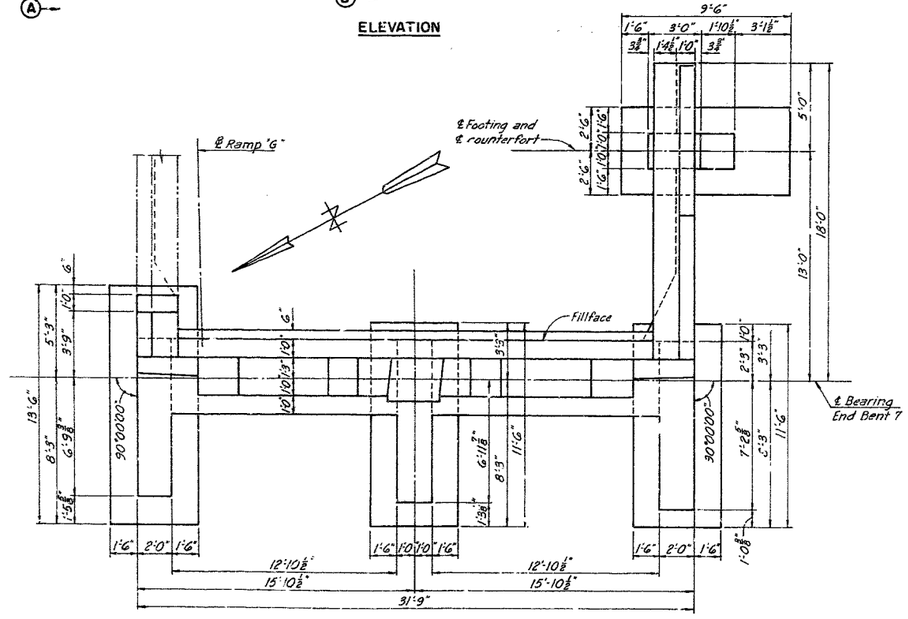

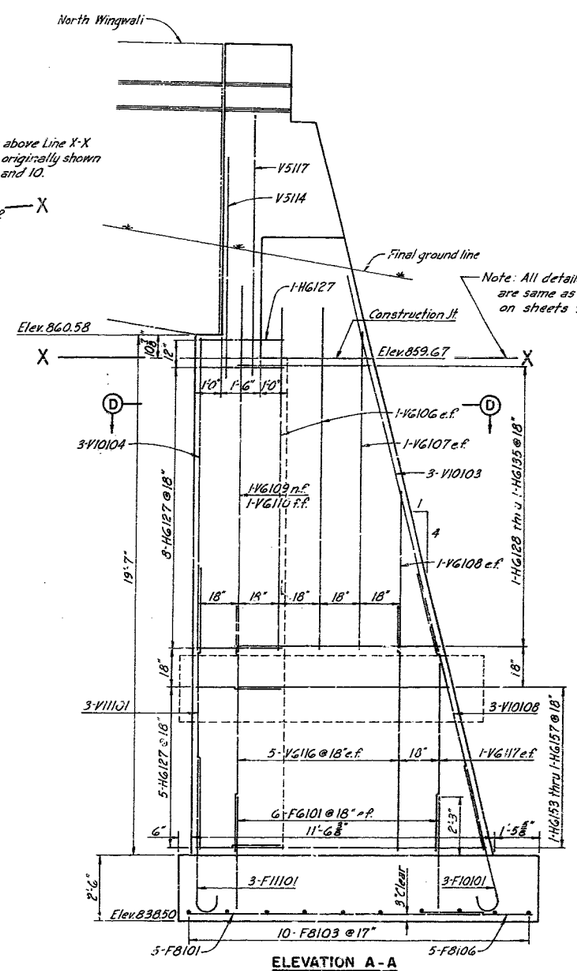

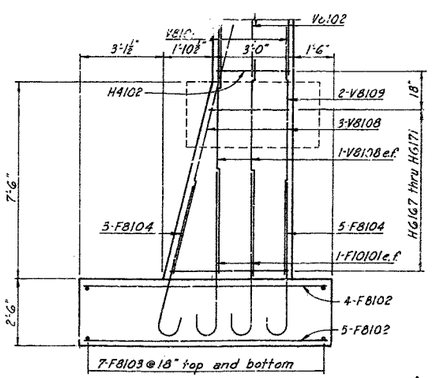

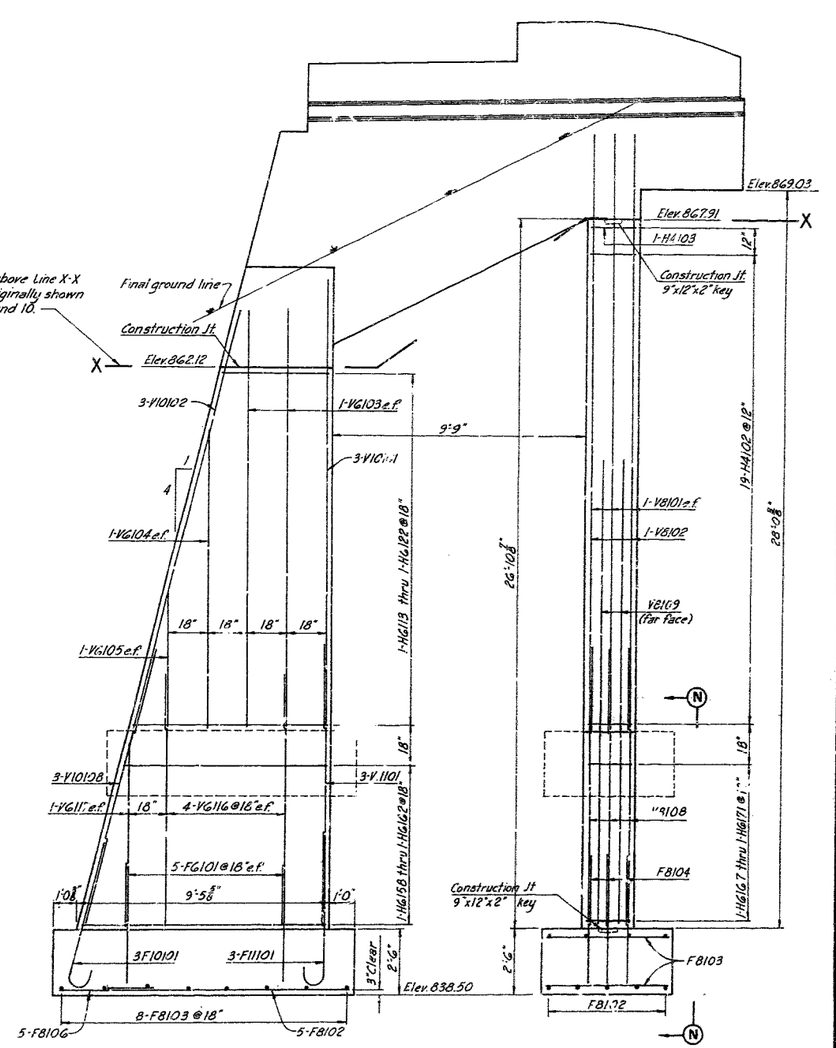

Note: For Section D-D, see Sheet 9 of original plans dated 2-12-62.

FINISHED

Void See Final Plans Sheet 9A of 8

FINISHED

RAMP "G" OVER
BRIDGE: RTE. I-70 & RAMP "H"
STATE ROAD - ROUTES I-435 & I-70 INTERCHANGE
FROM ROUTE 40 TO LEEDS ROAD
PROJECT NO. I-435-1(24)(RTE. I-435) STA. 11+49.41 (℄ RAMP "G")
JACKSON COUNTY

FINISHED

△ Rev. 4-22-63

A-991A

HOWARD, NEEDLES, TAMMEN & BERGENDOFF
CONSULTING ENGINEERS
KANSAS CITY NEW YORK

MADE T.J.C.jr	DATE 4-22-63	TRACED	DATE
CHECKED R.V.S.	DATE 4-24-63	SCALE	

NOTE: This drawing is not to scale. Follow dimensions.

△1 FOOTING REVISIONS FOR END BENT 7

SHEET 1 OF 3

319

MISSOURI STATE HIGHWAY DEPARTMENT

FED. ROAD DIV. NO.	STATE	FEDERAL PROJECT NO. & Sec.	FISCAL YEAR	SHEET NO.	TOTAL SHEETS
5	MO.				
DIST. NO.	COUNTY			SUBFIX	SEC.
4	JACKSON				

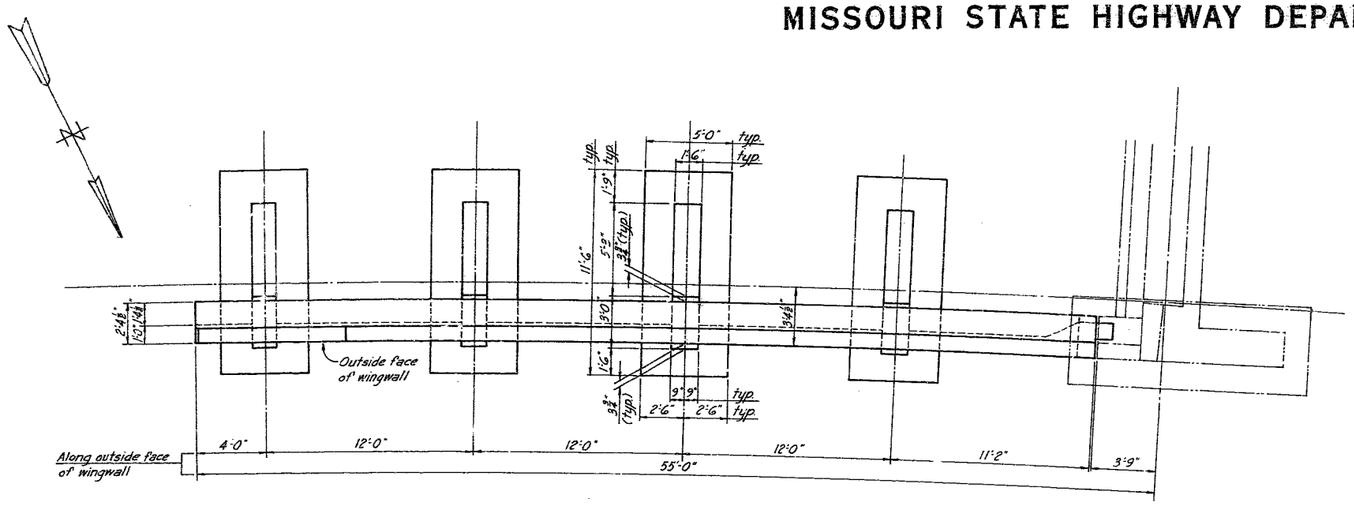

NORTH WINGWALL PLAN

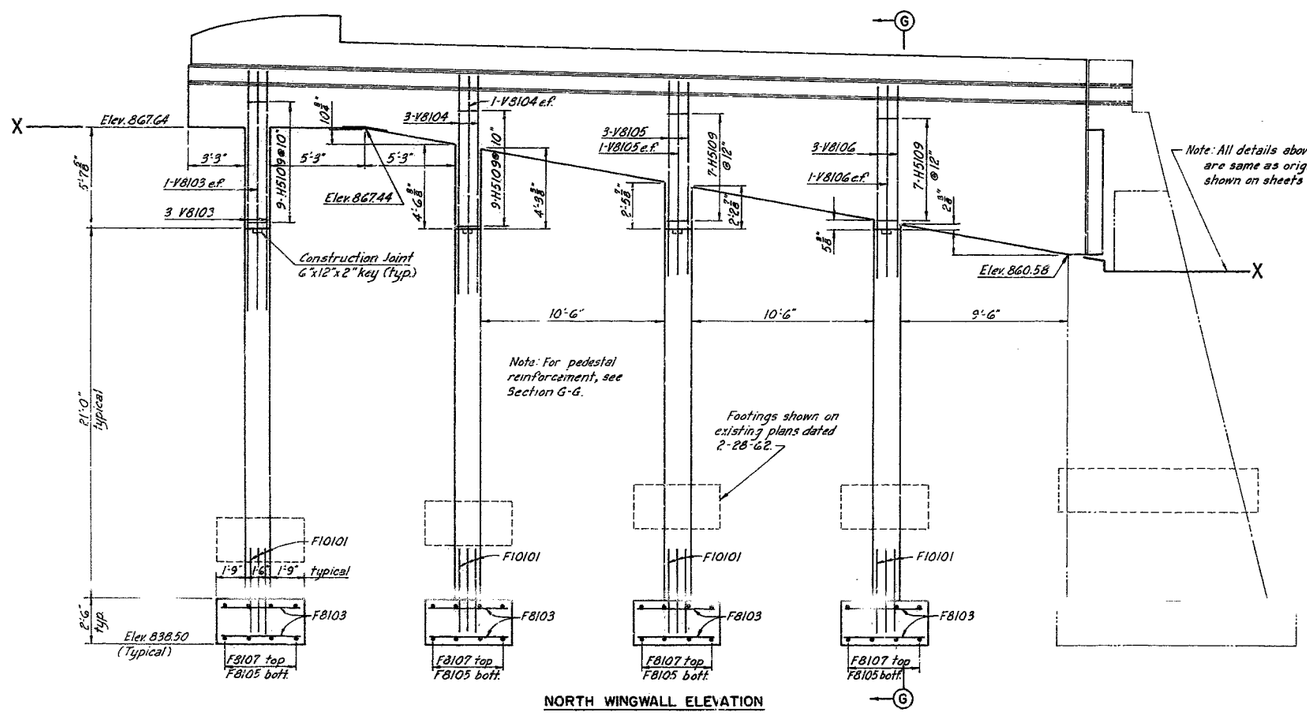

NORTH WINGWALL ELEVATION

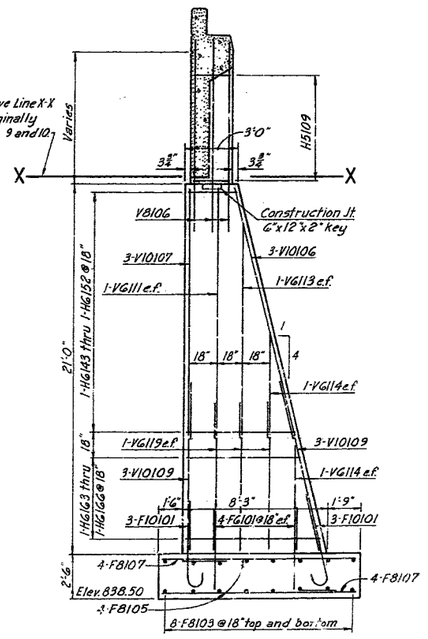

SECTION G-G

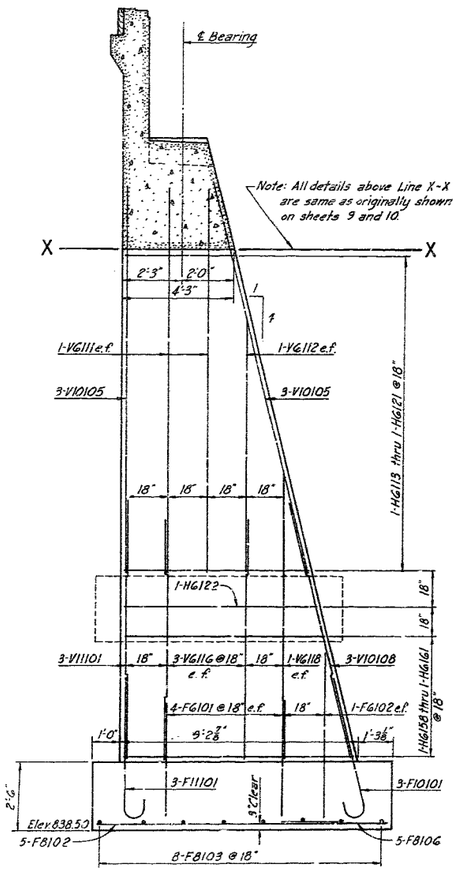

SECTION B-B

320

HOWARD, NEEDLES, TAMMEN & BERGENDOFF
CONSULTING ENGINEERS
KANSAS CITY NEW YORK

MADE	T J C jr	DATE	4-22-63	TRACED		DATE	
CHECKED	RVS	DATE	4-24-63	SCALE			

NOTE: This drawing is not to scale. Follow dimensions.

Void See Final Plans Sheet 10A of 8

FINISHED

FINISHED

RAMP "G" OVER
BRIDGE: RTE. I-70 & RAMP "H"
STATE ROAD - ROUTES I-435 & I-70 INTERCHANGE
FROM ROUTE 40 TO LEEDS ROAD
PROJECT NO. I-435-1(24)(RTE. I-435) STA. 11+49.41 (℄ RAMP "G")
JACKSON COUNTY FINISHED

⚠ FOOTING REVISIONS FOR END BENT 7 SHEET 2 OF 3 ⚠ Rev. 4-22-63

A-991A

MISSOURI STATE HIGHWAY DEPARTMENT

FED. AID SEC. NO.	STATE	FEDERAL PROJECT NO. & Sec.	FISCAL YEAR	SHEET NO.	TOTAL SHEETS
5	MO.				
DIST. NO.	COUNTY		ROUTE	SEC.	
4	JACKSON				

BILL OF REINFORCEMENT

NO.	MARK	LENGTH	SHAPE	LOCATION
Additional Bars Required for End Bent 7				
15	F8106	4'-8"	Str.	Footing
32	F8107	4'-2"	Str.	
9	F11101	7'-3"	C	Footing
24	V6116	9'-6"	Str.	Pedestal
4	V6117	7'-6"		
2	V6118	10'-6"		
24	V6119	8'-6"	Str.	
10	V8108	10'-6"	Str.	
2	V8109	18'-0"	Str.	
9	V10108	11'-0"	Str.	
24	V10109	10'-0"	Str.	
9	V11101	10'-10"	Str.	
1	HG153	17'-10"		
1	HG154	18'-7"		
1	HG155	19'-4"		
1	HG156	20'-1"		
1	HG157	20'-10"		
2	HG158	20'-3"		
2	HG159	21'-0"		
2	HG160	21'-9"		
2	HG161	22'-6"		
1	HG162	23'-3"		
4	HG163	17'-2"		
4	HG164	17'-11"		
4	HG165	18'-8"		
4	HG166	19'-5"		
1	HG167	11'-1"		
1	HG168	11'-10"		
1	HG169	12'-7"		
1	HG170	13'-4"		
1	HG171	14'-1"		Pedestal

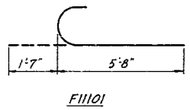

F11101

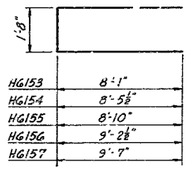

HG153	8'-1"
HG154	8'-5⅝"
HG155	8'-10"
HG156	9'-2⅝"
HG157	9'-7"

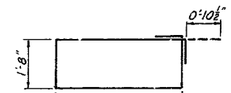

HG158	7'-7"
HG159	7'-11⅛"
HG160	8'-4"
HG161	8'-8⅝"
HG162	9'-1"
HG167	3'-0"
HG168	3'-4⅝"
HG169	3'-9"
HG170	4'-1⅛"
HG171	4'-6"

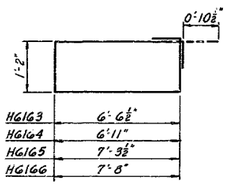

HG163	6'-6⅛"
HG164	6'-11"
HG165	7'-3⅝"
HG166	7'-8"

BENDING DIAGRAMS

321

FINISHED

BRIDGE: RAMP "C" OVER RTE. I-70 & RAMP "H"

STATE ROAD - ROUTES I-435 & I-70 INTERCHANGE

FROM ROUTE 40 TO LEEDS ROAD

PROJECT NO. I-435-1(24)(RTE. I-435) STA. 11+49.41 (E RAMP "C")

JACKSON FINISHED COUNTY

FINISHED

HOWARD, NEEDLES, TAMMEN & BERGENDOFF
CONSULTING ENGINEERS
KANSAS CITY NEW YORK

MADE TJCjr DATE 4-22-63 TRACED ____ DATE ____

CHECKED RVS DATE 4-24-63 SCALE ____

NOTE: This drawing is not to scale. Follow dimensions.

⚠ FOOTING REVISIONS FOR END BENT 7

SHEET 3 OF 3

⚠ Rev 4-22-63

(.-991A

NO CONSTRUCTION CHANGES

MISSOURI STATE HIGHWAY DEPARTMENT

FED. ROAD DIST. NO.	STATE	FED. AID PROJ. NO.	FISCAL YEAR	SHEET NO.	TOTAL SHEETS
5	MO.		19		

(13)

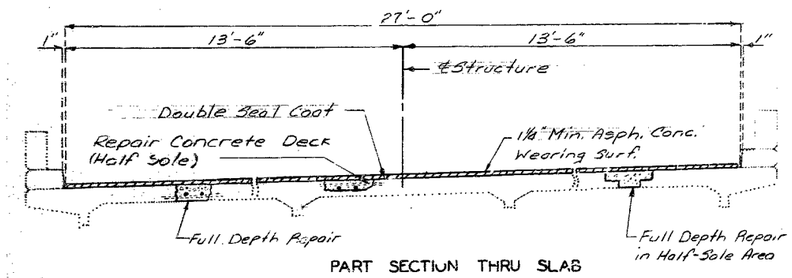

PART SECTION THRU SLAB

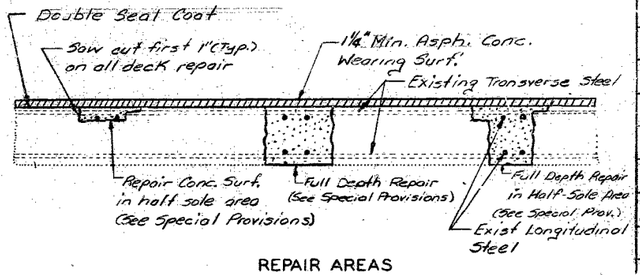

REPAIR AREAS

Note: Outline of old work is indicated by light dotted lines. Heavy lines indicate new work

ESTIMATED QUANTITIES		TOTAL
Repairing Conc. Deck (Half Soling)	Sq. Ft.	651
Full Depth Repair	Sq. Ft.	260
Bituminous Material (Seal Coat) (Asph. Conc.)	Gal.	723
Asph. Cement, 60-70 or AC-20	Ton	5.0
Mineral Aggr. (Asph. Conc.) (Type A Mix)	Ton	94
Cover Aggr. (Grade 3)	Ton	36.2
Preformed Compression Expansion Jt. Seal (2") In	L.F.	54

BRIDGE: RAMP "G" OVER RTE. I-70 AND RAMP H

JOB NO. 4-I-435-514

PROJ. NO. IR-435-1(165)

JACKSON COUNTY A-991R

Sheet No. 1 of 4

55
80

B.I.4.

BRIDGE

STATE ROAD

ABOUT

PROJECT NO. IR-435-1(165) **STA.**

JOB NO. 4-I-435-514 **RTE** I-435

Jackson **COUNTY**

DATE

STD.
STD.
A-991R

DESIGNED 19

DETAILED 19

CHECKED 19

Note: This drawing is not to scale. Follow dimensions.

Sheet No. 1 of 4.

MISSOURI STATE HIGHWAY DEPARTMENT

FED. ROAD DIST. NO.	STATE	FED. AID PROJ. NO.	FISCAL YEAR	SHEET NO.	TOTAL SHEETS
5	MO.		19		

(14)

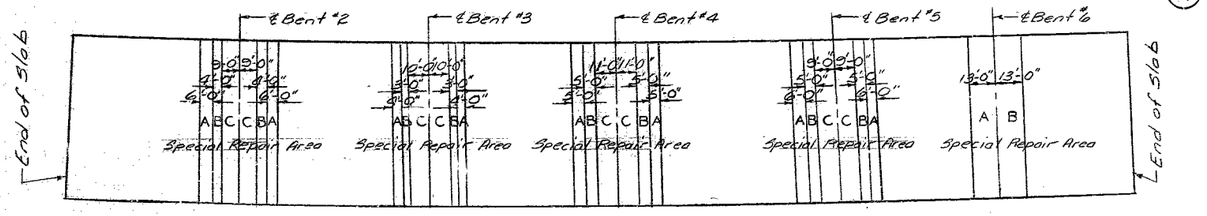

PLAN OF EXISTING SLAB

Note: Any concrete removal for half-sole or full depth repair in areas designated 'A, B' etc" shall be repaired in alphabetical order. (See Special Provisions)

Sheet No 2 of 4 JACKSON COUNTY A-991R

BM

BRIDGE

STATE ROAD

ABOUT

PROJECT NO. IR-435-1(165) **STA.**

JOB NO. 4-I-435-514 **RTE.** I-435

Jackson **COUNTY**

DATE

STD.	
STD.	
A-991R	

DESIGNED 19
DETAILED 19
CHECKED 19

Note: This drawing is not to scale. Follow dimensions.

Sheet No. 2 **of** 4 .

89

MISSOURI STATE HIGHWAY DEPARTMENT

FED. ROAD DIST. NO.	STATE	FED. AID PROJ. NO.	FISCAL YEAR	SHEET NO.	TOTAL SHEETS
5	MO.		19		

(15)

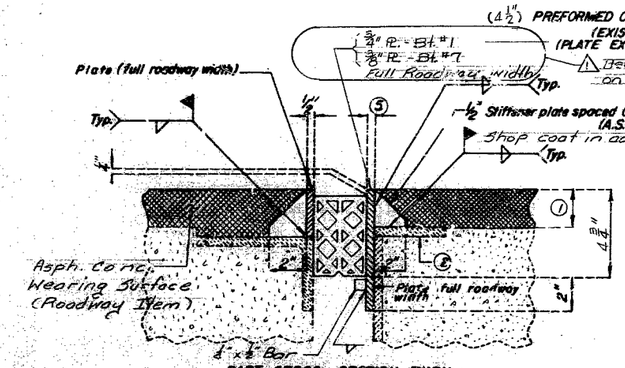

⚠1 See same as detailed on opposite side

1. 1¼" Asphalt Concrete Wearing Surface.
2. Cut and smooth existing expansion device plate flush with existing expansion gap.
3. Curb plate (A.S.T.M. A36) shall be galvanized in accordance with A.S.T.M. A123 and A.S.T.M. A153.
4. Concrete anchors shall be the cone expansion type for hot-dip galvanized bolts or cast-in-place Conc. Anchors.
5. If Plate thickness is less than a ¼" then a ½" wide plate shall be used with the height measured from top of existing expansion device plate to top of wearing surface.

For location of ③ and ④ see sh. no. 4

TABLE OF TRANSVERSE SEAL TOLERANCES
(INCHES)

TYPE	"A" (WIDTH)	"B" (HEIGHT)	"C" (SHELL)	"D" (WEBS)	"E"(B3 ONLY) (SMALL WEBS)	
A1 OR B3	2.500 +.250 −.000	2.750 +.125 −.125	0.187 +.046 −.015	0.093 +.031 −.015	0.062 +.031 −.031	
A1 OR B3	3.000 +.250 −.000	3.406 +.187 −.187	0.187 +.046 −.015	0.125 +.046 −.015	0.075 +.046 −.031	
A1 OR B3	3.500 +.250 −.000	3.500 +.187 −.187	0.187 +.046 −.015	0.125 +.046 −.015	0.087 +.046 −.031	
A1 OR B3	4.000 +.312 −.000	4.718 +.250 −.250	A1: 0.250 +.046 −.031; B3: 0.235 +.046 −.031	0.187 +.046 −.015	0.111 +.046 −.031	
A1 OR B3	4.500 +.312 −.000	4.500 +.250 −.250	0.250 +.046 −.031	0.187 +.046 −.015	0.111 +.046 −.031	Bl. #1 & 7

Note: Plan dimensions are based on right angles.
See Special Provisions for requirements of the compression seal.

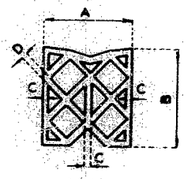

TYPE A1

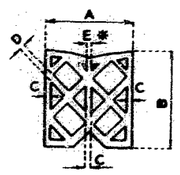

TYPE B3

* OPTIONAL "C"

⚠ Revised: 6-8-83

Sheet No. 3 of 4

JACKSON COUNTY A-991R

B.M.

BRIDGE
STATE ROAD
ABOUT
PROJECT NO. IR-435-1(16.5) **STA.**
JOB NO. 4-I-435-514 **RTE** I-435
Jackson **COUNTY**
DATE

STD.
STD.
A-991R

DESIGNED 19
DETAILED 19
CHECKED 19

Note: This drawing is not to scale. Follow dimensions.

Sheet No. 3 of 4.

78

MISSOURI STATE HIGHWAY DEPARTMENT

FED. ROAD DIST. NO.	STATE	FED. AID PROJ. NO.	FISCAL YEAR	SHEET NO.	TOTAL SHEETS
5	MO.		19		

(16)

Compression seal and Plates shall be bent to conform to new crown and grade of roadway.
2-layers of 50# roofing felt shall be placed between curb plate and recess in curb.

See Special Provisions for modifications of expansion device and installation of seal and curb Plates.

Note: For ①, ③ and ④, see sh. no. 3

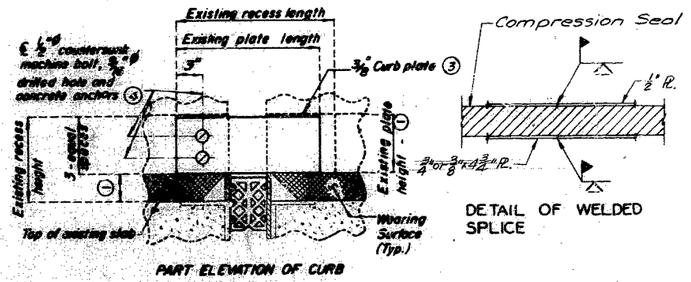

PART ELEVATION OF CURB

DETAIL OF WELDED SPLICE

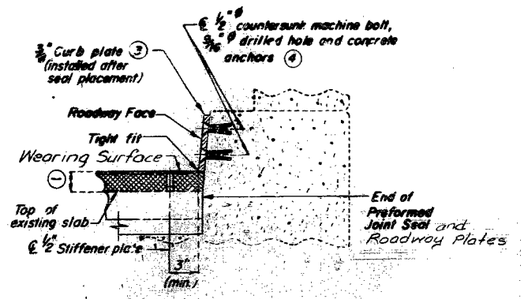

PART SECTION THRU EXP. GAP

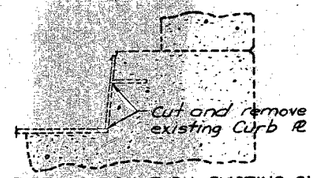

PART SECTION THRU EXISTING CURB

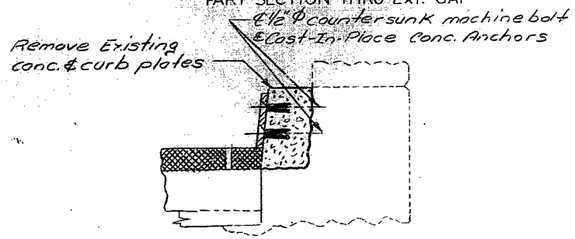

PART SECTION THRU EXP. GAP (OPTIONAL) SEE SPECIAL PROVISIONS

JACKSON COUNTY A-991R

Sheet No. 3 of 4.

B.M.

BRIDGE

STATE ROAD

ABOUT

PROJECT NO. IR-435-1(165) **STA.**

JOB NO. 4-I-435-514 **RTE** I-435

Jackson **COUNTY**

DATE

STD.
STD.
A-991R

DESIGNED 19
DETAILED 19
CHECKED 19

Note: This drawing is not to scale. Follow dimensions.

Sheet No. 4 **of** 4.

88

MISSOURI STATE HIGHWAY DEPARTMENT

FED. ROAD DIST. NO.	STATE	FED. AID PROJ. NO.	FISCAL YEAR	SHEET NO.	TOTAL SHEETS
5	MO.		19	16	

FINAL PLANS

(13)

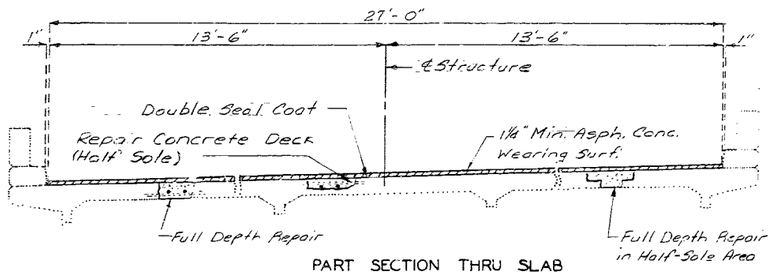

PART SECTION THRU SLAB

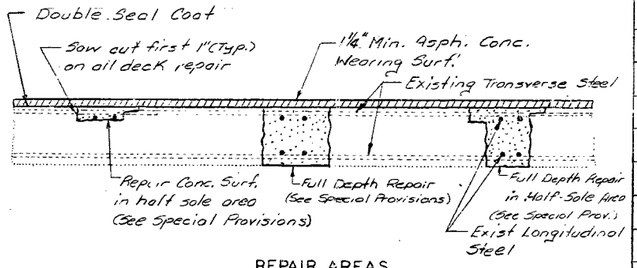

REPAIR AREAS

Note: Outline of old work is indicated by light dotted lines. Heavy lines indicate new work

ESTIMATED QUANTITIES		TOTAL
Repairing Conc. Deck (Half Soling)	Sq. Ft.	4677
Full Depth Repair	Sq. Ft.	53
Bituminous Material (See Cost) (Asph. Conc.)	Gal.	435
Asph. Cement 60-70 or AC-20	Ton	51
Mineral Aggr. (Asph. Conc.) (Type A Mix)	Ton	111
Cover Agg. (Grade 3)	Ton	31
Preformed Compression Expansion Jt. Seal (4½ In.)	L.F.	54

BRIDGE: RAMP "G" OVER RTE. I-70 AND RAMP H

JOB NO. 4-I-435-514

PROJ. NO. IR-435-1(165)

JACKSON COUNTY A-99IR

Sheet No. 1 of 4

B.M.

BRIDGE

STATE ROAD

ABOUT

PROJECT NO. IR-435-1(165) **STA.**

JOB NO. 4-I-435-514 **RTE** I-435

Jackson **COUNTY**

DATE

STD.
STD.
C-99.1

DESIGNED 19

DETAILED 19

CHECKED 19

Note: This drawing is not to scale. Follow dimensions.

Sheet No. 1A of 4.

99

MISSOURI HIGHWAY AND TRANSPORTATION COMMISSION

State	Proj. No.	Sheet No.
MO		B3Z
SEC/SUR 19	TWP 49N	RGE 32W

U.I.P. (75'-85'-85'-100'-75'-60') CONTINUOUS CONCRETE BOX GIRDER SPANS

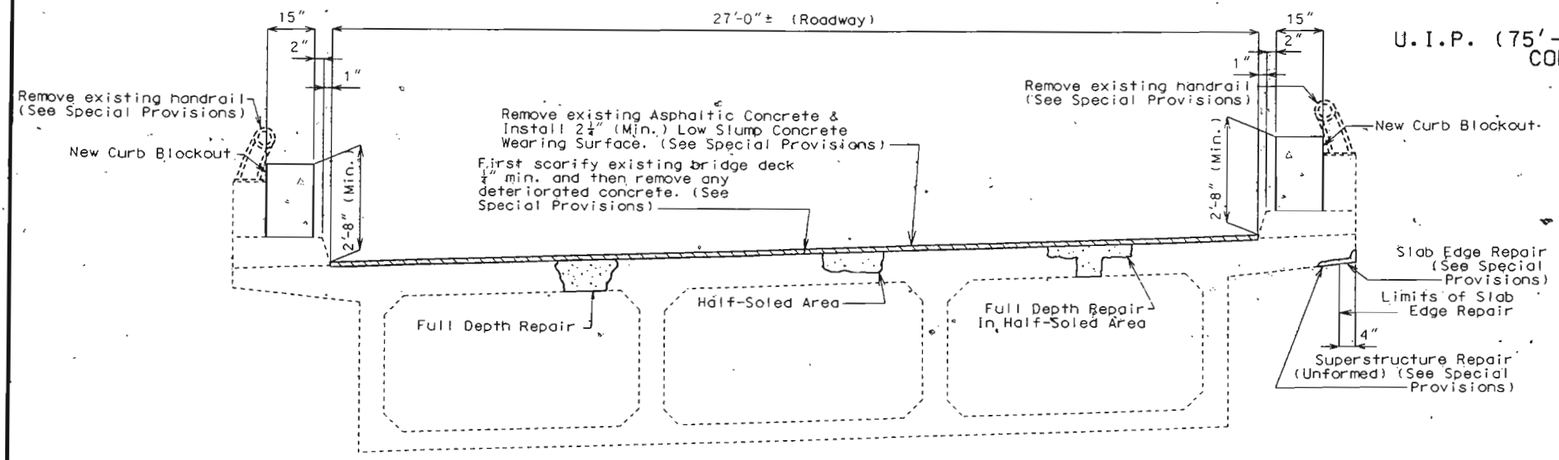

SECTION THRU SLAB

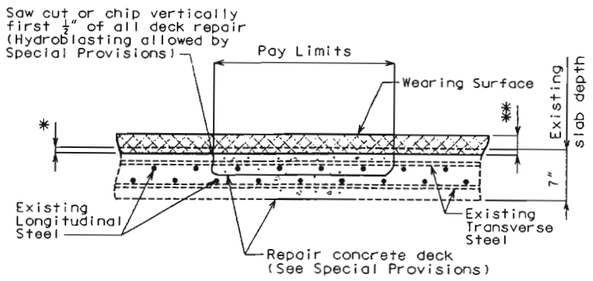

* First Scarify existing bridge deck ¼" min. and then remove any deteriorated concrete. (See Special Provisions)

** 2¼" (min.) Low Slump Concrete Wearing Surface

HALF-SOLED AREA

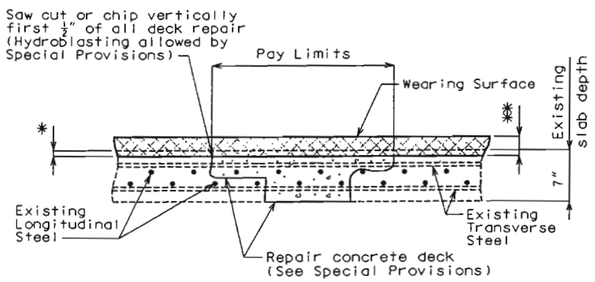

* First Scarify existing bridge deck ¼" min. and then remove any deteriorated concrete. (See Special Provisions)

** 2¼" (min.) Low Slump Concrete Wearing Surface

FULL DEPTH REPAIR IN HALF-SOLED AREA

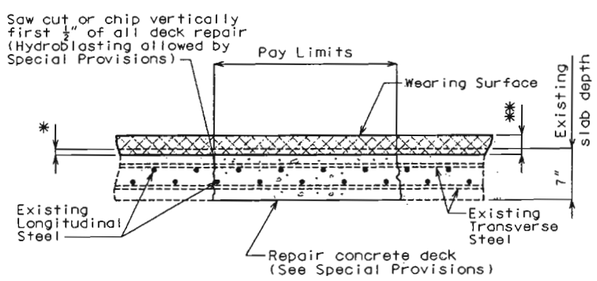

* First Scarify existing bridge deck ¼" min. and then remove any deteriorated concrete (See Special Provisions)

** 2¼" (min.) Low Slump Concrete Wearing Surface

FULL DEPTH REPAIR

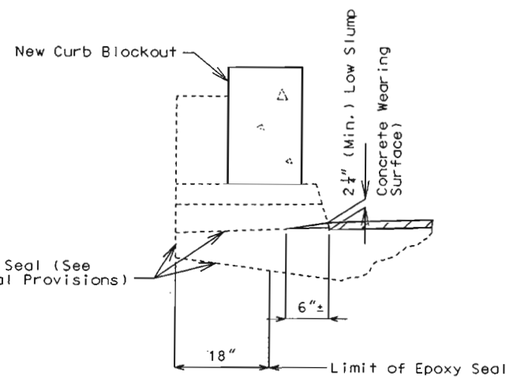

TYPICAL SECTION THRU CURB OUTLET

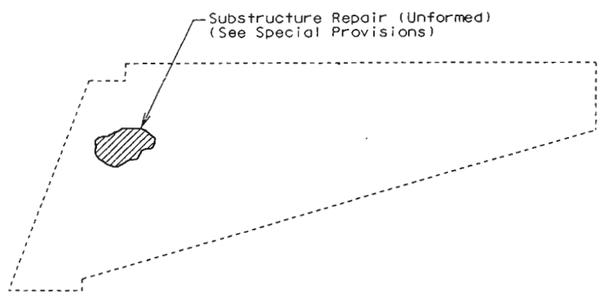

DETAIL OF END BENT WING SHOWING SUBSTRUCTURE REPAIR AT BENT NOS. 1 & 7

Note: For General Notes & Quantities, see sheet no. 2.

REPAIRS TO BRIDGE (RAMP "G") OVER RTE. I-70 AND RAMP "H"

STATE ROAD FROM RTE. 350 NORTH TO RTE. 40

ABOUT 0.5 MILE SOUTH OF RTE. 40

PROJECT NO. STA. 8+82.97± (match existing)

JOB NO. J4I0712 RTE. I-435

JACKSON COUNTY Date: / /

STD. 609.00
STD. 706.35
A09912

REV.

Designed Mar. 2002
Detailed Mar. 2002
Checked July 2002

Note: This drawing is not to scale. Follow dimensions.

T:\br-proj\robinc1\Misc-A09912\a09912_000front.dgn 10:07 AM 08/20/2002

State	Proj. No.	Sheet No.
MO		B33

ESTIMATED QUANTITIES

ITEM		TOTAL
Asphalt Removal (Bridges)	sq. ft.	12,914
Replacement of Expansion Device and Adjacent Concrete	lin. ft.	54
Removal of Existing Bridge Rails	lin. ft.	1085
Bridge Approach Slab (Bridge)	sq. yd.	151
Substructure Repair (Unformed)	sq. ft.	105
Superstructure Repair (Unformed)	sq. ft.	200
Protective Coating for Concrete Bents and Concrete Piers under Expansion Devices	lump sum	1
Curb Blockout	lin. ft.	1118
Repairing Concrete Deck (Half-Soling)	sq. ft.	6200
Full Depth Repair	sq. ft.	1000
Slab Edge Repair (Bridges)	lin. ft.	100
Low Slump Concrete Wearing Surface	sq. yd.	1435
Strip Seal Expansion Joint System	lin. ft.	54
Cleaning and Coating Existing Bearings	ea.	8
Drainage System (On Structure)	lump sum	1
Transporting Lead Contaminated Residue To Storage Area	lump sum	1
Transporting Lead Contaminated Residue To The Smelter	lump sum	1
Disposal of Lead Contaminated Residue	lump sum	1

Notes:

Payment for the removal and replacement of any end posts, shall be included in contract unit price for Curb Blockout per lin. ft.

Removal of concrete and reinforcing at End Bent Nos. 1 and 7 shall be completely covered in the contract unit price for Replacement of Expansion Device and Adjacent Concrete per lin. ft.(See Special Provisions).

All concrete and reinforcing required for replacement of backwall, curbs and parapets necessary for placement of strip seal expansion devices at End Bent Nos. 1 & 7 shall be completely covered in the contract unit price for Replacement of Expansion Device and Adjacent Concrete per lin. ft. (See Special Provisions).

Removal of existing Bridge Approach Slabs shall be considered a Roadway Item.

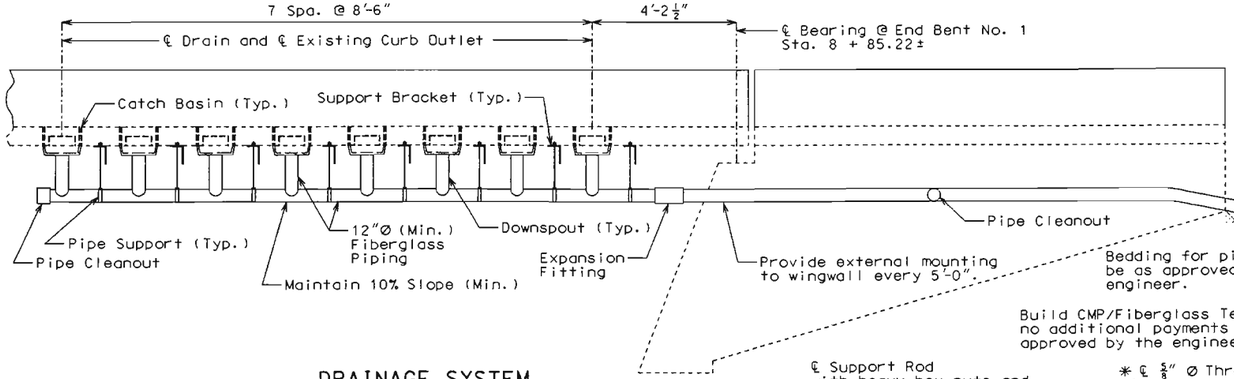

DRAINAGE SYSTEM

Drainage:

A reinforced fiberglass pipe, catch basin and fittings, draining system shall be installed at each curb outlet along left side of deck in first span of bridge. Catch Basins shall be installed at and centered about each curb outlet using no less than four Resin Anchors each.

Drain pipe shall be not less than 12" diameter fiberglass and shall be extended and attached to roadway drain basin (Rdwy Item) (Installed this contract) underground. Connection to drain basin shall be rigid and firmly sealed to allow no leaks. Drain Pipe shall be supported between connections to downspout by hangers attached to bottom of slab or outside of curb and slab (See Special Provisions).

Detailed shop drawings of the drainage system shall be prepared and submitted to the engineer. Shop drawings shall comply with the requirements outlined for shop drawings for structural steel, Sec 712.3.2. Catalog data may be furnished for components which are standard manufactured items in lieu of detailed drawings, providing, governing dimensions are given.

Payment for the above described work including all materials, equipment, tools, labor, installation and all incidental work necessary shall be made and considered completely covered under the contract unit price, per lump sum, for "Drainage System (On Structure)".

Catch basin shall completely enclose existing curb outlet and have sufficient capacity to efficiently channel all drainage water to drain basin.

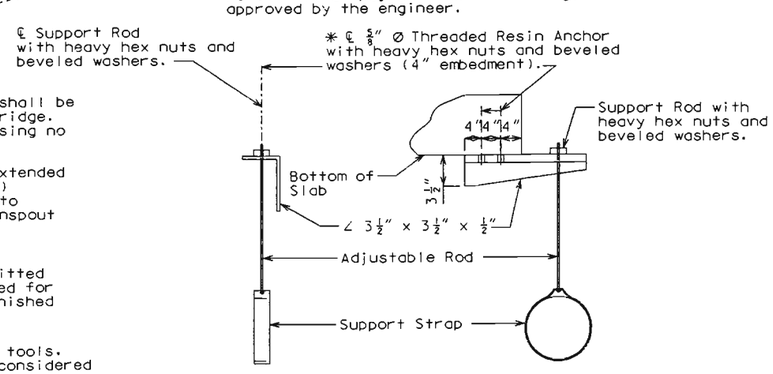

Note: * Avoid connecting support bracket to areas of bottom of slab with new edge repair or superstructure repair.

DETAILS OF DRAINAGE PIPE SUPPORTS

General Notes:

Design Specifications:
AASHTO - 1996 and Interims thru 2000

Design Unit Stresses:
Class B1 Concrete (Curb Blockout, Substructure Repair and Deck Repair) f'c = 4.000 psi
Reinforcing Steel (Grade 60, Epoxy Coated) fy = 60.000 psi

Joint Filler:
All joint filler shall meet the requirements of Section 1057.2.4 of the Missouri Standard Specifications, except as noted.

Reinforcing Steel:

Minimum clearance to reinforcing steel shall be 1½", unless otherwise shown.

Bars bonded in old concrete not removed shall be cleanly stripped and embedded into new concrete where possible. If length is available, old bars shall extend into new concrete at least 40 diameters for smooth bars and 30 diameters for deformed bars, unless otherwise noted.

Traffic:
Bridge will be closed to traffic during construction.

Curb Blockouts:
Measurement of Curb Blockout is to the nearest linear foot, measured along outside of slab for left and right curb blockouts. For limits of Curb Blockout, see sheet nos. 8 and 9.

All exposed edges of Curb Blockout shall have ½" radius or ⅜" bevel unless otherwise shown.

Payment for concrete, reinforcing steel, resin anchors, and any other work incidental to the curb blockouts, complete-in-place, shall be included in the contract unit price for Curb Blockout per linear foot.

Cost of any concrete curb and parapet repair shall be considered completely covered in the contract unit price for Curb Blockout.

All reinforcement shall be epoxy coated.

Existing handrail shall be removed and will be considered the property of the contractor.

Resin Anchors:

The contractor shall use one of the resin anchor systems listed in the Job Special Provisions. These anchor systems shall be installed according to the manufacturer's specifications, except as modified by the Job Special Provisions.

Cost of furnishing and installing the anchor system complete in place shall be included in the contract unit price for Curb Blockout.

The ⅝" diameter resin anchor systems shall have a minimum ultimate pullout strength of 15,500 lbs. in concrete with f'c = 4,000 psi. (See Special Provisions).

An epoxy coated #5 Grade 60 reinforcing bar shall be substituted for the ⅝"Ø threaded rod stud. For shape and length of reinforcing bar, see sheet no. 7, 12 thru 16.

Miscellaneous:
Outline of old work is indicated by dashed lines. Heavy lines indicate new work.

Contractor shall verify all dimensions in field before ordering new material.

Roadway surfacing adjacent to bridge ends to match bridge overlay.

In order to maintain grade and a minimum thickness of overlay as shown on plans, it may be necessary to use additional quantities of overlay at various locations throughout the structure. No payment will be allowed for additional labor, materials or equipment for variations in thickness of overlay.

Contractor shall verify that bottom slab access doors at bottom of box girders and bottom of slab drains are in working condition and that work in this contract does not impair their function (see original plans for details). Cost shall be considered incidental to other pay items.

STATE OF MISSOURI
GREGORY E. SANDERS
NUMBER E-2000145187
DATE 8-22-02

Detailed Mar. 2002
Checked July 2002

Note: This drawing is not to scale. Follow dimensions.

JACKSON COUNTY A09912

REV.

T:\br-proj\robinct\Misc-A09912\a09912_000misc.dgn 9:14:47 AM 08/22/2002

State	Proj. No.	Sheet No.
MO		B34

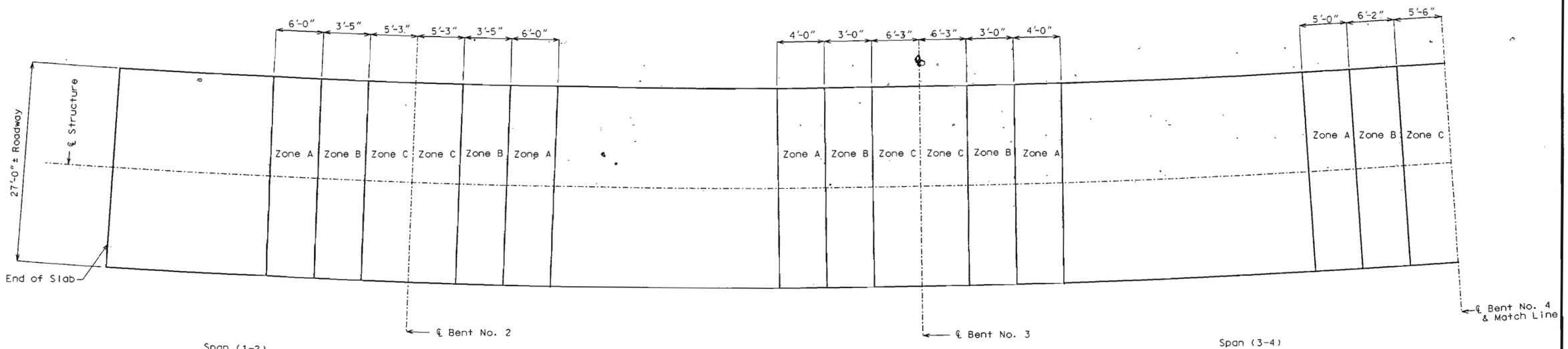

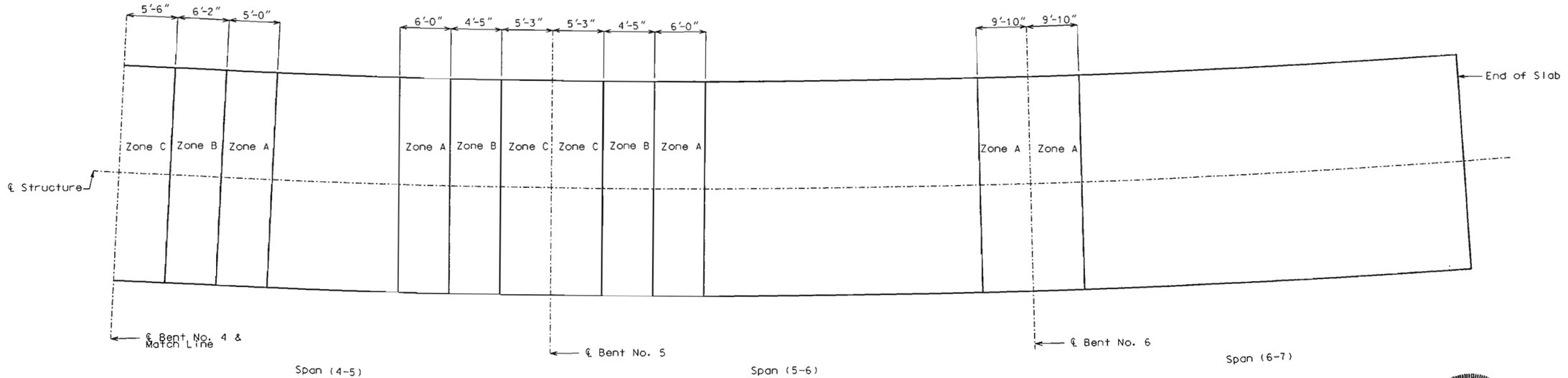

Note:
Zones with the same letter designation may be repaired at the same time except for the zones directly adjacent to the centerline of bent. Sequence of repairs follows Zone A. Zone B then Zone C in alphabetical order. If either of the zones adjacent to centerline of bent has a single repair area of over 10 square feet or a total repair area of over 20 square feet. that zone shall be repaired before removing concrete in the other zone of the same designation at that bent.

Any repair in the remainder of the bridge that is within 42" of Zone A shall be completed before removing old concrete in Zone A.

PLAN OF SLAB SHOWING SPECIAL REPAIR ZONES

STATE OF MISSOURI
GREGORY E. SANDERS
NUMBER E-2000102167
REGISTERED PROFESSIONAL ENGINEER
DATE 8-22-02

Detailed Mar. 2002
Checked July 2002

Note: This drawing is not to scale. Follow dimensions.

JACKSON COUNTY A09912 REV.

T:\br-proj\robinc1\Misc-A09912\a09912_000zone.dgn 01:09:21 PM 08/21/2002

State	Proj. No.	Sheet No.
MO		B35

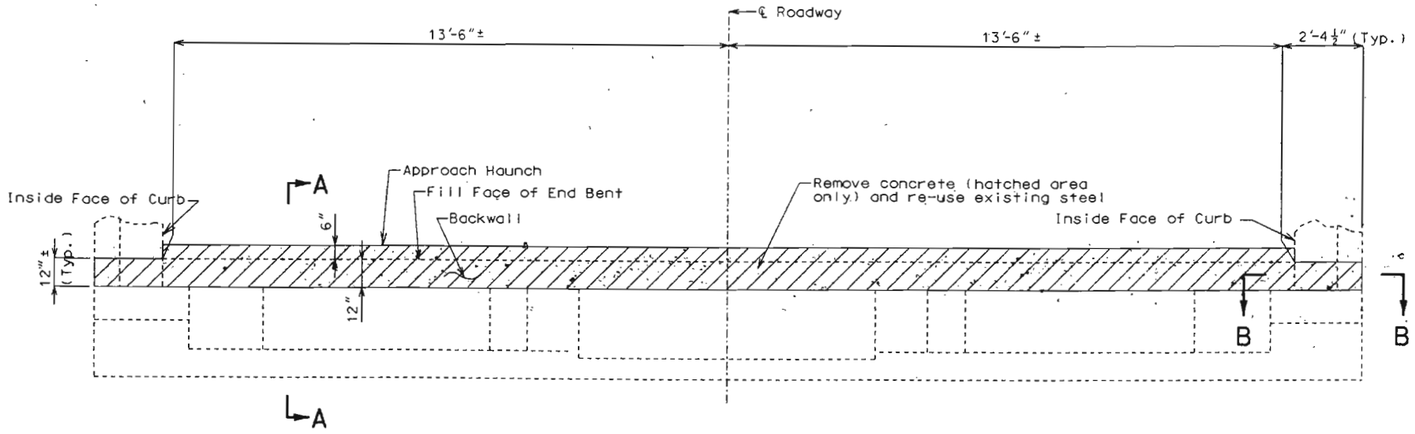

PART PLAN OF END BENT SHOWING EXISTING CONCRETE REMOVAL

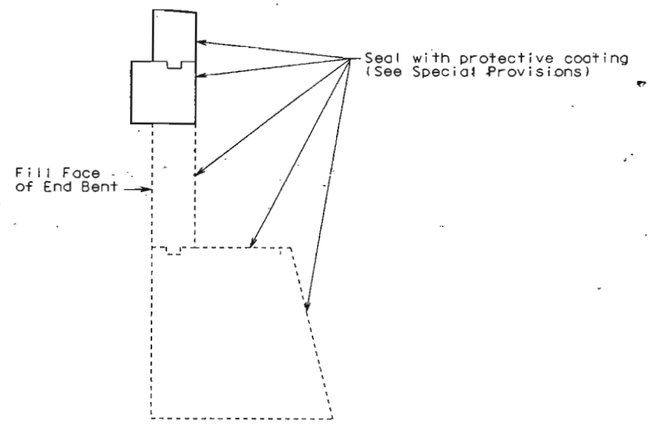

SECTION THRU END BENT
SHOWING PROTECTIVE COATING LIMITS

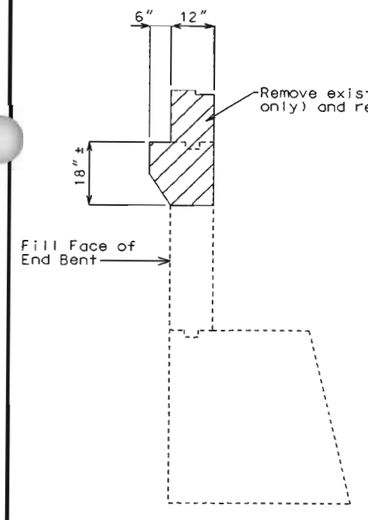

SECTION A-A
(SHOWING EXISTING CONCRETE REMOVAL)

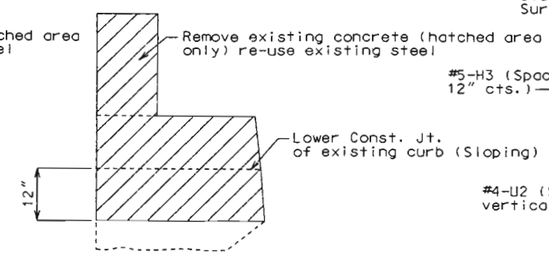

SECTION B-B
(SHOWING EXISTING CONCRETE REMOVAL)

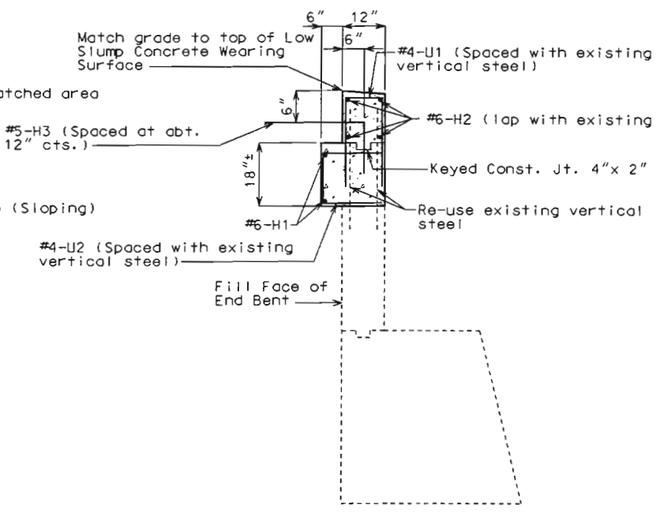

SECTION A-A
(SHOWING CONCRETE REPLACEMENT)

Note: For expansion device placement in backwall, see sheet nos. 5 & 6.

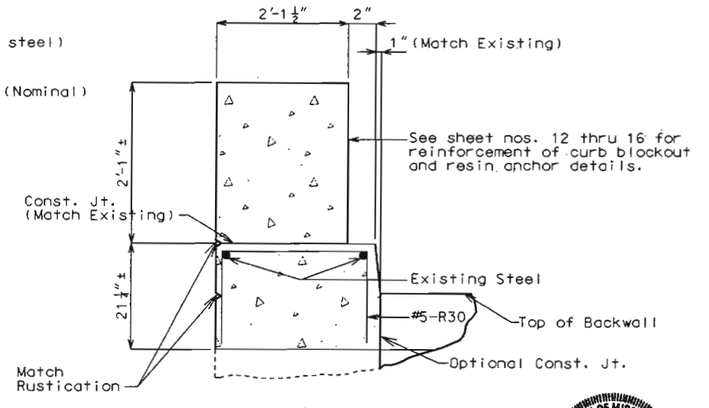

SECTION B-B
(SHOWING CONCRETE REPLACEMENT)

STATE OF MISSOURI
GREGORY E. SANDERS
NUMBER E-2000162187
PROFESSIONAL ENGINEER
DATE 8-22-02

Notes: Concrete for replacement shall be Class B-1.
For details of strip seal expansion device replacement, see sheet nos. 5 and 6.

Payment for removal and replacement of curb and parapets shall be completely covered in the contract unit price for Replacement of Expansion Device and Ajacent Concrete (See Special Provisions).

All new reinforcing steel shall be epoxy coated.

TYPICAL DETAILS FOR END BENT NOS. 1 & 7

Detailed Mar. 2002
Checked July 2002

Note: This drawing is not to scale. Follow dimensions.

JACKSON COUNTY A09912

REV.

T:\br-proj\robinc1\Misc-A09912\a09912_000backw.dgn 09:08:19 AM 08/20/2002

State	Proj. No.	Sheet No.
MO		B36

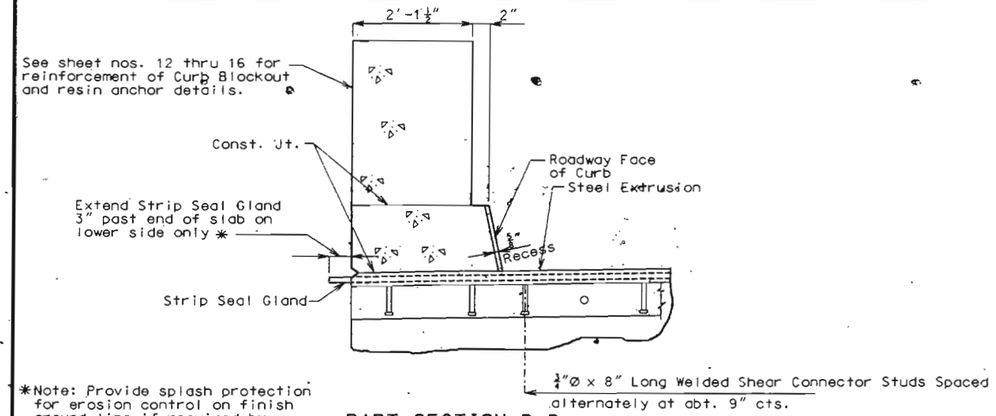

*Note: Provide splash protection for erosion control on finish ground line if required by the engineer (Roadway Item).

PART SECTION D-D

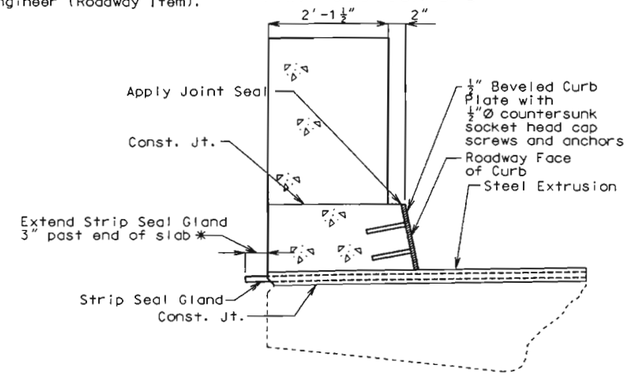

PART SECTION E-E (SHOWING CONCRETE REPLACEMENT)

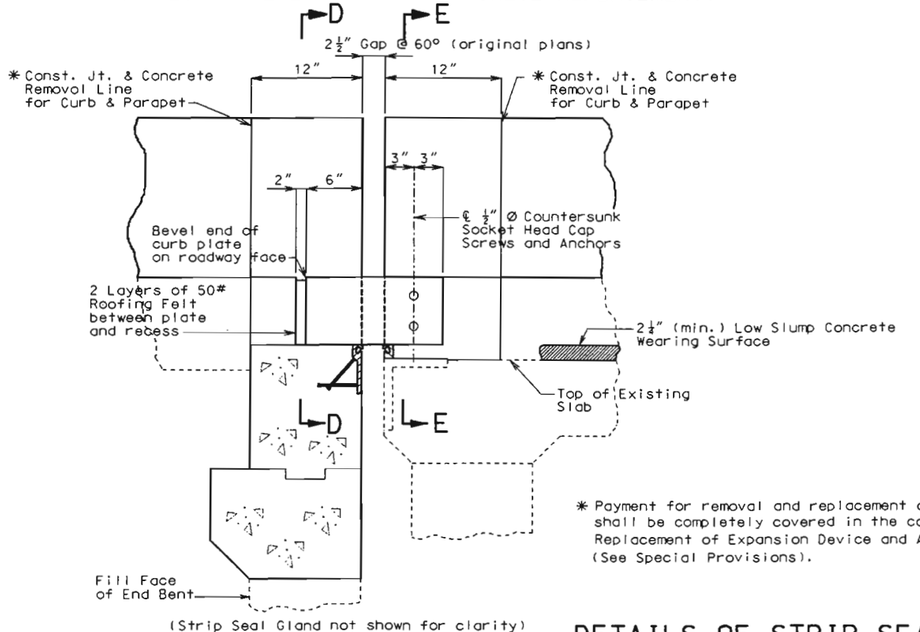

(Strip Seal Gland not shown for clarity)

PART SECTION B-B

DETAIL OF GLAND

Note: Use single layer gland. no multiple layer glands allowed.

Strip seal gland size = 4"

STRIP SEAL GLAND

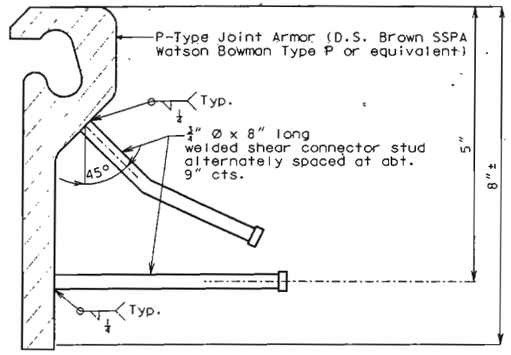

DETAIL OF STEEL EXTRUSION IN BACKWALL OF END BENT

DETAIL OF STEEL EXTRUSION ON EXISTING SLAB

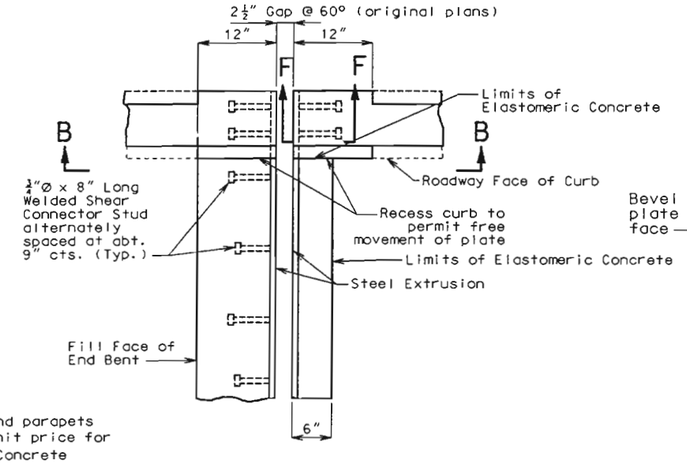

PART PLAN

* Payment for removal and replacement of curb and parapets shall be completely covered in the contract unit price for Replacement of Expansion Device and Adjacent Concrete (See Special Provisions).

NOTE:

The expansion device shall be fabricated and installed in accordance with the recommendations of the manufacturer, and as set forth in the Special Provisions.

The contractor shall verify all dimensions prior to fabrication.

Splices of steel extrusion shall develop full strength.

All steel shall be ASTM A709 Grade 36, except steel extrusions shall be ASTM A709 Grade 50W or Grade 36.

Neoprene Strip Seal shall meet ASTM D-2628.

Anchors for the extrusions or armor shall be approved welded studs (C1010 thru C1020).

All welds shall conform to Section 712 of the Missouri Standard Specifications.

Concrete shall be forced under and around strip seal extrusions and studs. Proper consolidation of the concrete shall be achieved by localized internal vibration.

Plan dimensions are based on installation at 60°F. The gap shall be increased ⅛" for each 10° fall in temperature and decreased ⅛" for each 10° rise in temperature from the installation temperature.

Longitudinal reinforcing steel shall be placed so that ends shall not be more than 1"± from vertical leg of extrusion at Expansion Device.

Structural steel for the expansion device shall be coated with a minimum of two coats of inorganic zinc primer (5 mils minimum). Anchors need not be protected from overspray.

Payment for furnishing, coating and placing steel extrusions, miscellaneous structural steel, and neoprene strip seal shall be made under the contract unit price for Strip Seal Expansion Joint System per lin. ft.

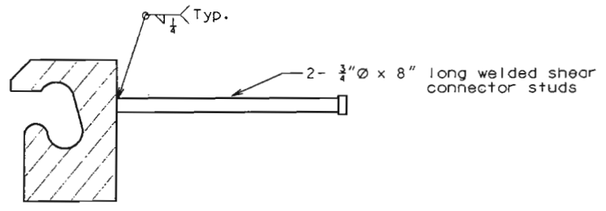

Note: Shift existing reinforcement in curb to clear studs.

PART SECTION F-F

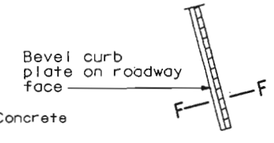

AT END OF BEVELED CURB PLATE

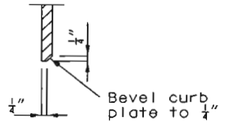

SECTION F-F

DETAILS OF STRIP SEAL EXPANSION DEVICE REPLACEMENT AT END BENTS

Detailed Apr. 2002
Checked July 2002

Sheet No. 5 of 18

JACKSON COUNTY

A09912

State	Proj. No.	Sheet No.
MO		B37

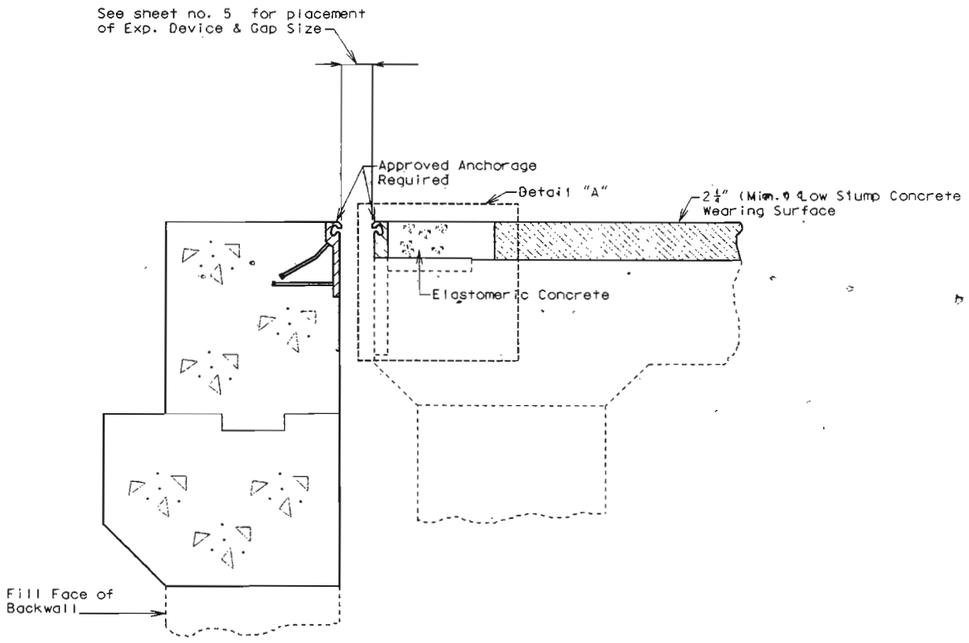

PART SECTION THRU END OF SLAB AT BENT NO. 1

Note: Bent No. 7 similar.

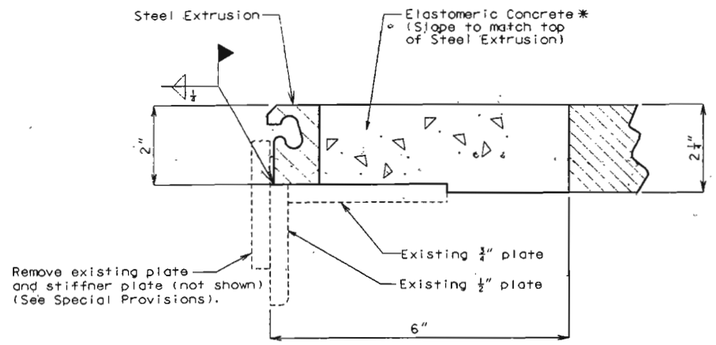

DETAIL "A"

*Submit manufacturer's specifications and installation requirements to the engineer for approval.

DETAILS OF STRIP SEAL EXPANSION DEVICE AT END BENTS

STATE OF MISSOURI
GREGORY E. SANDERS
NUMBER E-2000122167
REGISTERED PROFESSIONAL ENGINEER
DATE 8-22-02

Detailed Apr. 2002
Checked July 2002

Note: This drawing is not to scale. Follow dimensions.

JACKSON COUNTY A09912 REV.

T:\br-proj\robinc\Misc-A09912\a09902_000exp1.dgn 07:44 AM 08/20/2002

STATE	PROJ. NO.	SHEET NO.
MO.		838

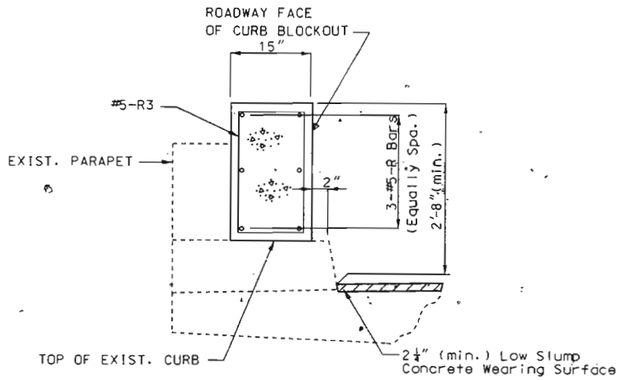

TYPICAL SECTION THRU CURB BLOCKOUT SHOWING REINFORCEMENT

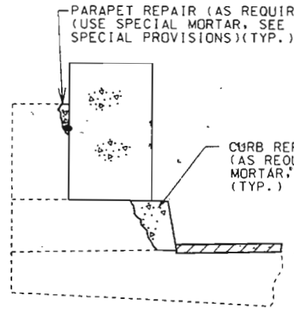

TYPICAL SECTION THRU CURB BLOCKOUT SHOWING CONCRETE CURB & PARAPET REPAIR

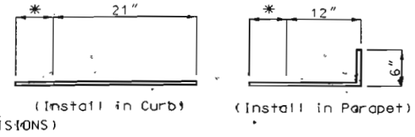

DETAILS OF RESIN ANCHORS AT 15" CURB BLOCKOUTS

* Manufacturer's embedment depth but no greater than 5" in Exist. Parapet and no greater than 7" in Exist. Curb (4" over curb outlets).

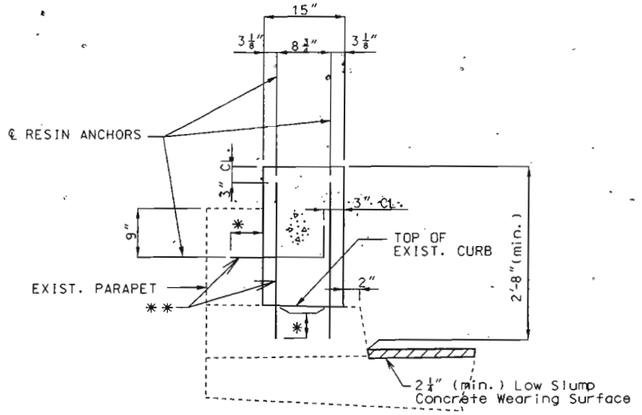

TYPICAL SECTION THRU CURB BLOCKOUT SHOWING RESIN ANCHORS

** Resin anchors spaced with alternating pattern at abt. 12" cts.

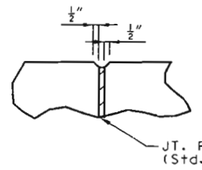

FILLED JOINT DETAIL

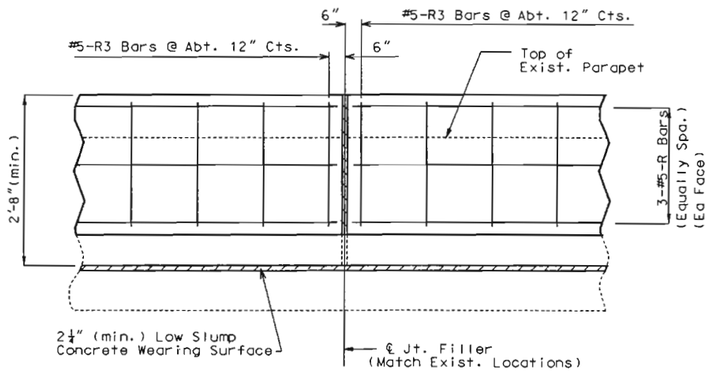

PART ELEVATION OF CURB BLOCKOUT SHOWING REINFORCEMENT

NOTES FOR CURB BLOCKOUT:

Concrete in curb blockout shall be Class B-1.

Measurement of the concrete Curb Blockout is to the nearest linear foot, measured along the inside face of existing parapet from end of wing to end of wing.

All exposed edges of curb blockout shall have ½" radius or ⅜" bevel unless otherwise shown.

Payment for concrete, reinforcing steel, resin anchors and any other work incidental to the curb blockout complete in place shall be included in the contract unit price for Curb Blockout.

Cost of any concrete curb & parapet repair shall be considered completely covered in the contract unit price for Curb Blockout.

Use a minimum lap of 3'-0" for #5 horizontal Curb Blockout bars where necessary.

The cross-sectional area of the Curb Blockout above top of existing curb = 2.59± sq. ft.

Provide or maintain access to existing active conduit systems and junction boxes.

Shift reinforcing steel in field where necessary to clear access openings for existing active junction boxes and conduit systems.

Match locations of existing filled joints.

Longitudinal reinforcing steel shall be field cut to required length between filled joints.

All reinforcing shall be epoxy coated.

Contractor shall prevent damage to existing conduit at light support standards and elsewhere on bridge (See Special Provisions).

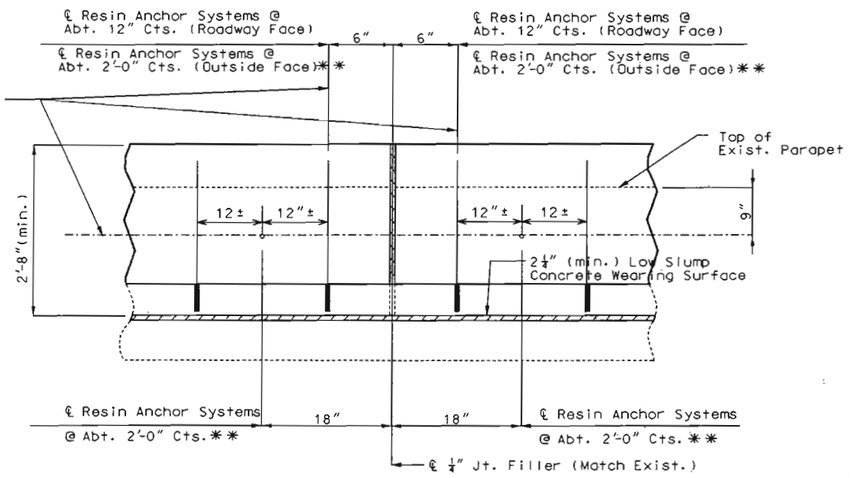

PART SECTION OF CURB BLOCKOUT SHOWING RESIN ANCHORS

STATE OF MISSOURI
GREGORY E. SANDERS
NUMBER E-2000016187
REGISTERED PROFESSIONAL ENGINEER
DATE 8-22-02

DETAILED Mar. 2002
CHECKED July 2002

TYPICAL DETAILS OF CURB BLOCKOUT

NOTE: THIS DRAWING IS NOT TO SCALE. FOLLOW DIMENSIONS.

JACKSON COUNTY

A09912

STATE	PROJ. NO.	SHEET NO.
MO.		839

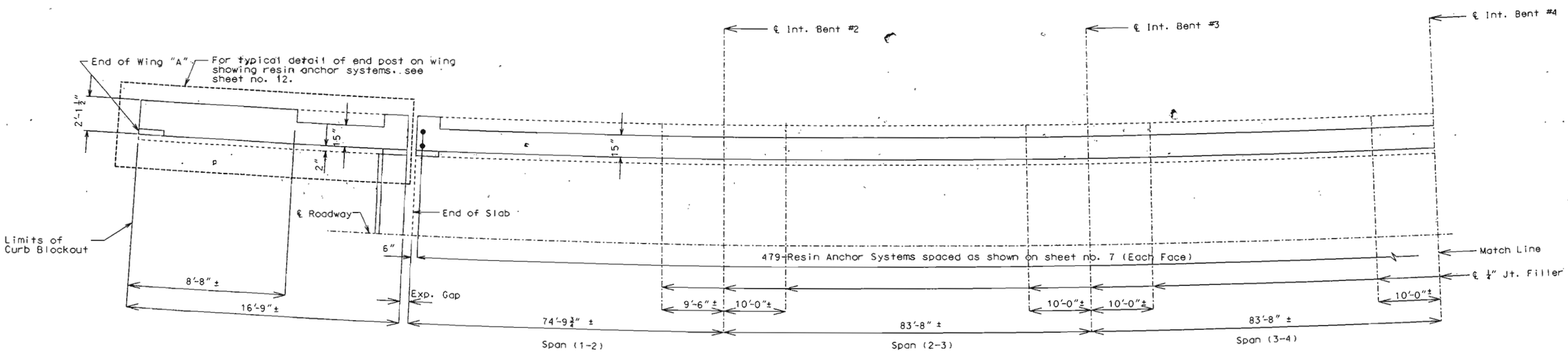

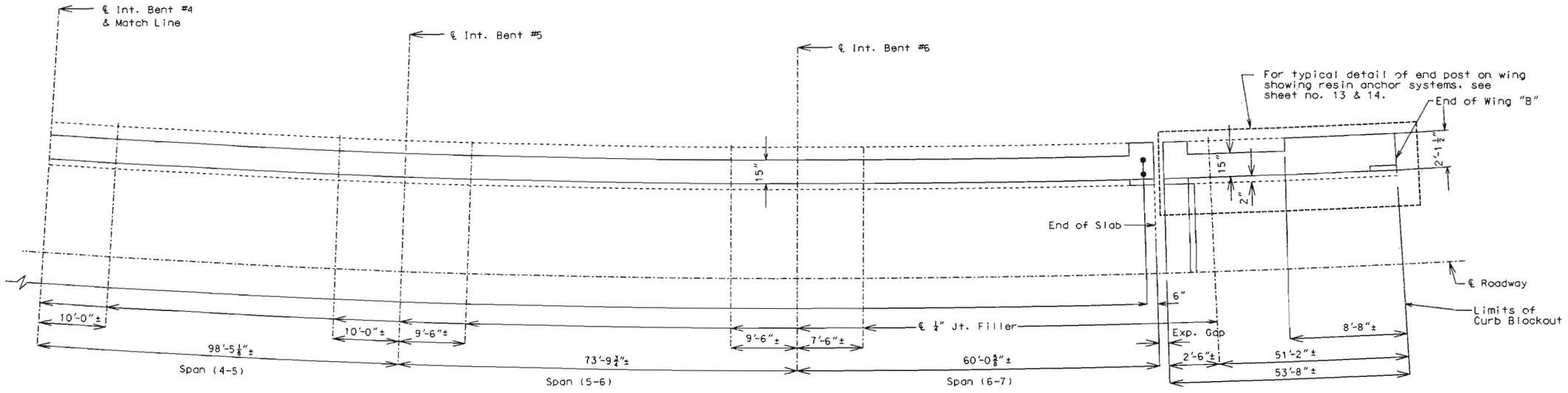

Notes:

Longitudinal dimensions shown are along ℄ parapet.
Match existing curb joints.
For details of resin anchor systems not shown, see sheet no. 7.

STATE OF MISSOURI
GREGORY E. SANDERS
NUMBER E-2000162157
REGISTERED PROFESSIONAL ENGINEER
DATE 8-22-02

PLAN OF LEFT CURB BLOCKOUT SHOWING RESIN ANCHOR SPACING

DETAILED MAR. 2002
CHECKED July 2002

NOTE: THIS DRAWING IS NOT TO SCALE. FOLLOW DIMENSIONS.

JACKSON COUNTY A09912

STATE	PROJ. NO.	SHEET NO.
MO.		840

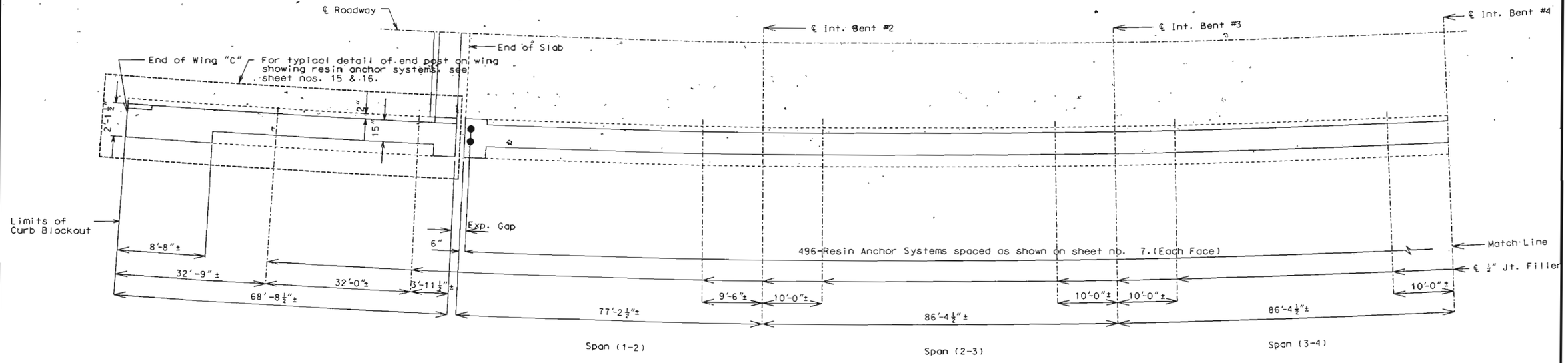

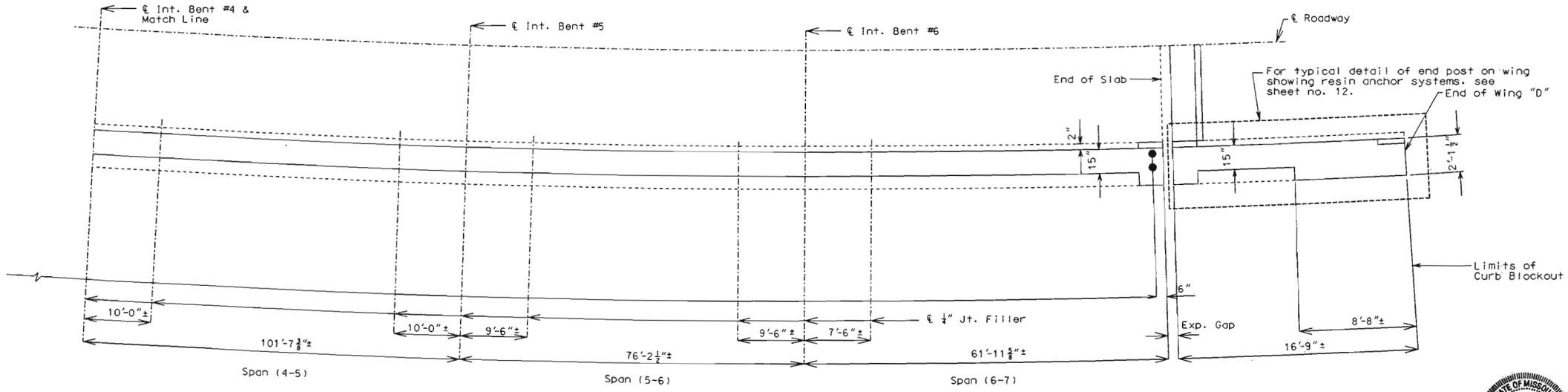

Note: Longitudinal dimensions shown are along parapet.
Match existing curb joints.
For details of resin anchor systems not shown, see sheet no. 7.

STATE OF MISSOURI
GREGORY E. SANDERS
NUMBER E-20001162157
REGISTERED PROFESSIONAL ENGINEER
DATE 8-22-02

PLAN OF RIGHT CURB BLOCKOUT SHOWING RESIN ANCHOR SPACING

STATE	PROJ. NO.	SHEET NO.
MO.		BA1

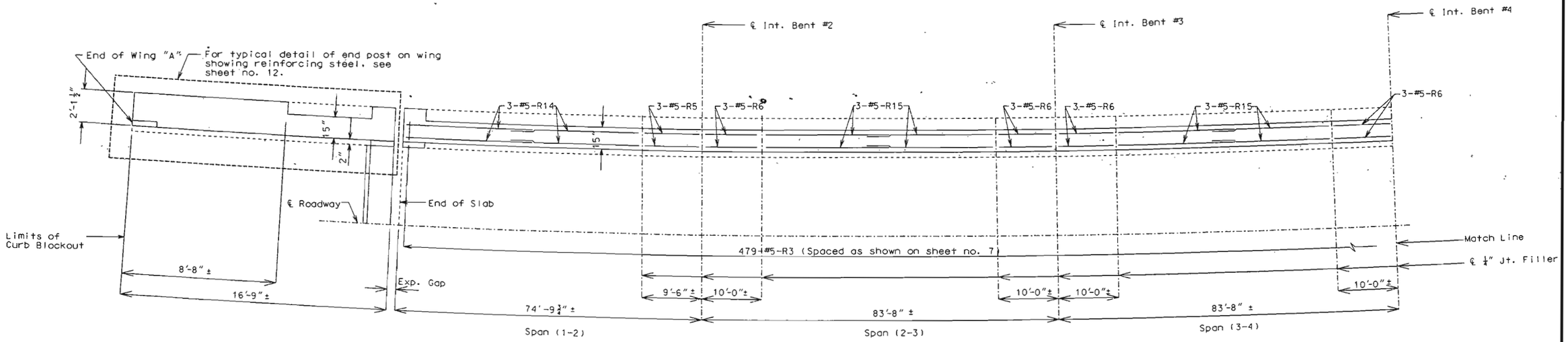

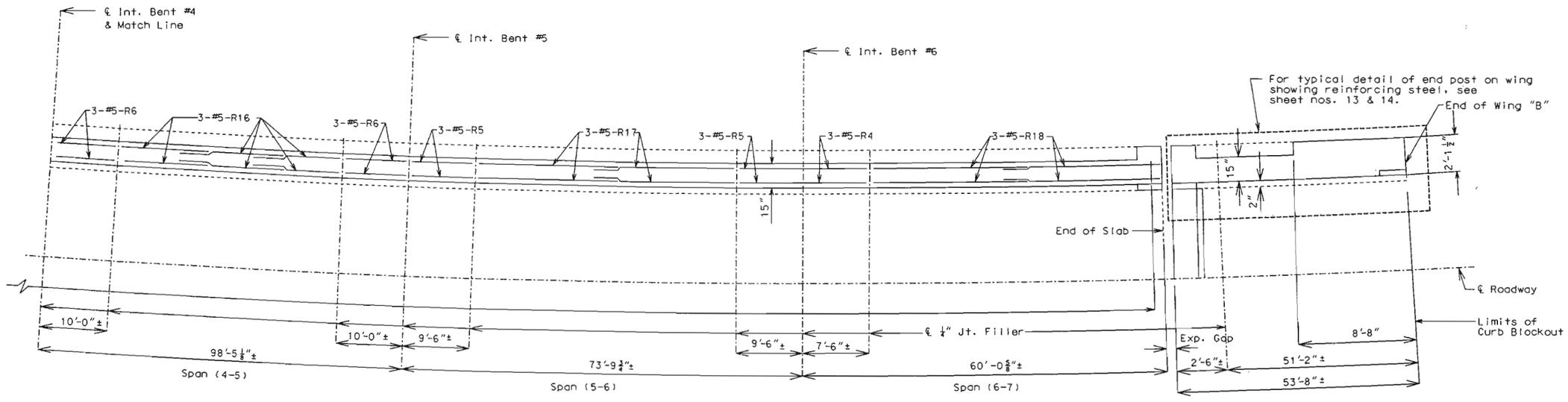

Note: Longitudinal dimensions shown are dimensions taken along parapet.
Match existing curb joints.
For details of reinforcing steel not shown, see sheet no. 7.
Use a minimum lap of 3'-0" for #5-R horizontal curb blockout bars.

STATE OF MISSOURI
GREGORY E. SANDERS
NUMBER E-2000142167
REGISTERED PROFESSIONAL ENGINEER
DATE 8/2/02

PLAN OF LEFT CURB BLOCKOUT SHOWING REINFORCING STEEL

DETAILED MAR. 2002
CHECKED July 2002

NOTE: THIS DRAWING IS NOT TO SCALE. FOLLOW DIMENSIONS.

JACKSON COUNTY

A09912

STATE	PROJ. NO.	SHEET NO.
MO.		842

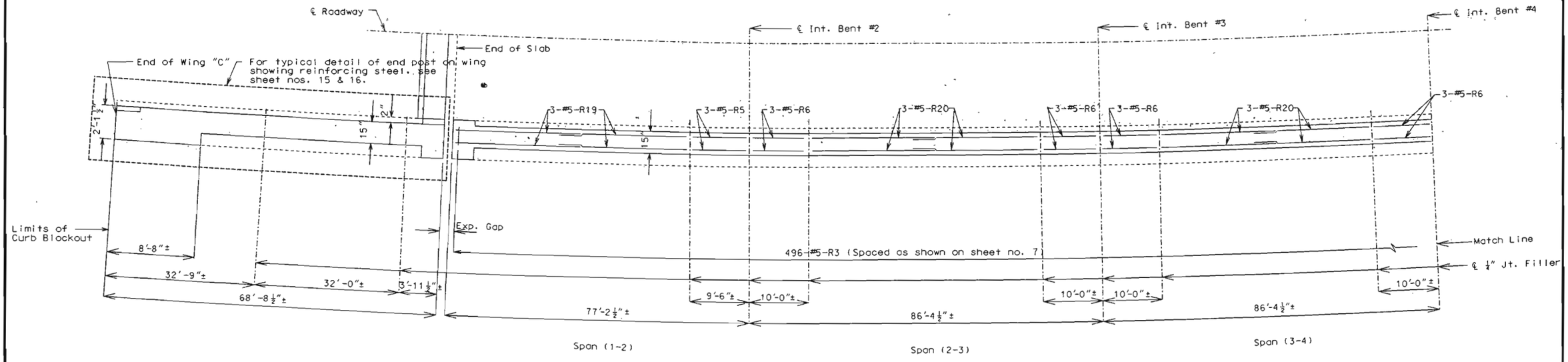

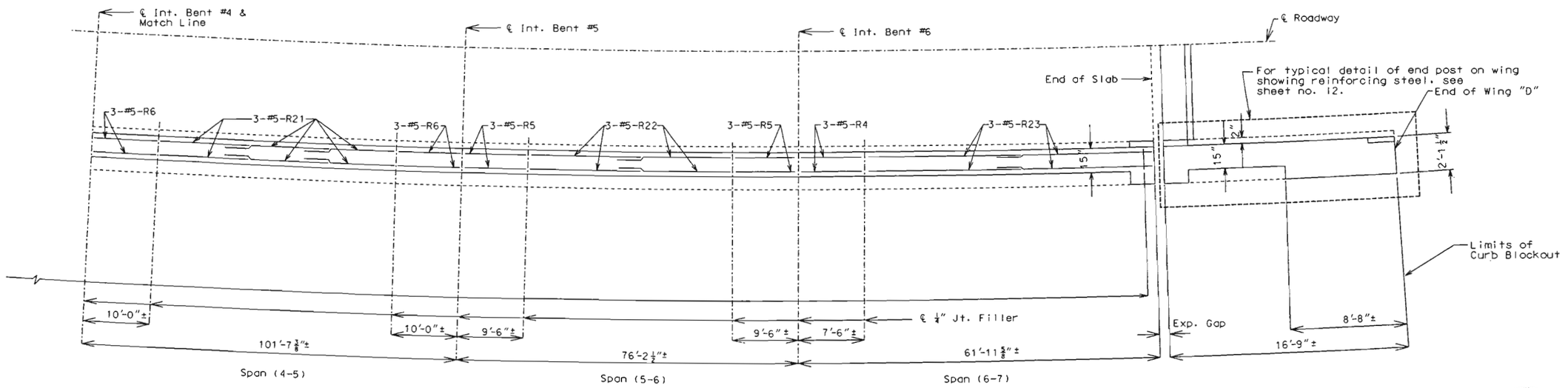

Note: Longitudinal dimensions shown are dimensions taken along ℄ parapet.
Match existing curb joints.
For details of reinforcing steel not shown, see sheet no. 7.
Use a minimum lap of 3'-0" for #5-R horizontal curb blockout bars.

PLAN OF RIGHT CURB BLOCKOUT SHOWING REINFORCING STEEL

STATE OF MISSOURI
GREGORY E. SANDERS
NUMBER E-2000152167
REGISTERED PROFESSIONAL ENGINEER
DATE 8-22-02

DETAILED MAR. 2002
CHECKED July 2002

NOTE: THIS DRAWING IS NOT TO SCALE. FOLLOW DIMENSIONS.

JACKSON COUNTY A09912

STATE	PROJ. NO.	SHEET NO.
MO.		843

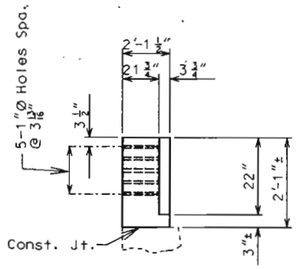

PART ELEVATION H-H

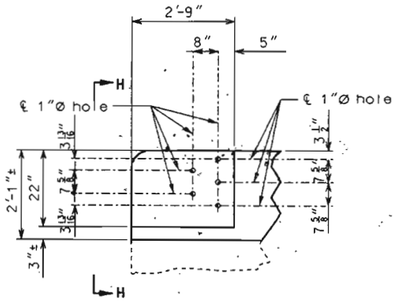

PART ELEVATION

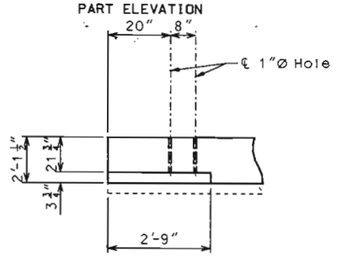

PART PLAN

DETAILS OF GUARD RAIL ATTACHMENT

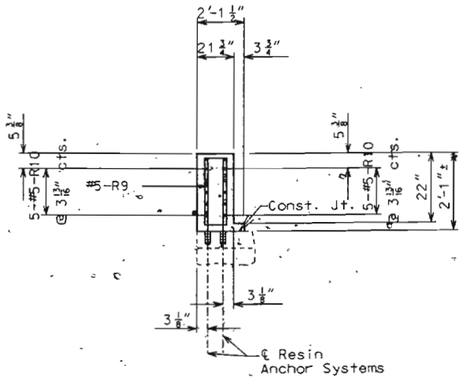

SECTION E-E

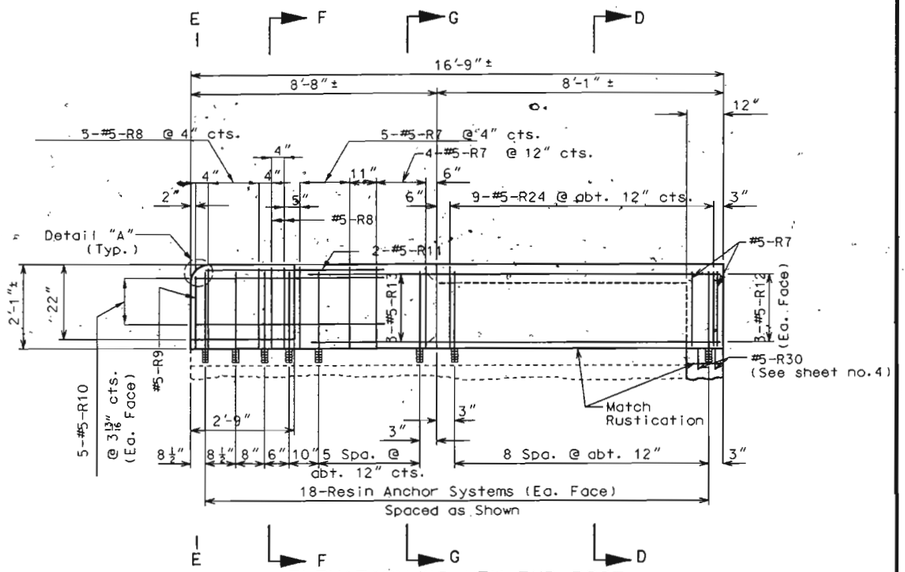

ELEVATION OF NEW END POST ON WING

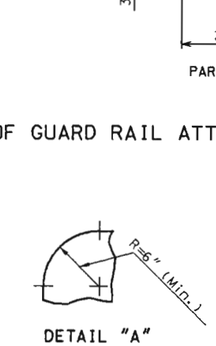

DETAIL "A"

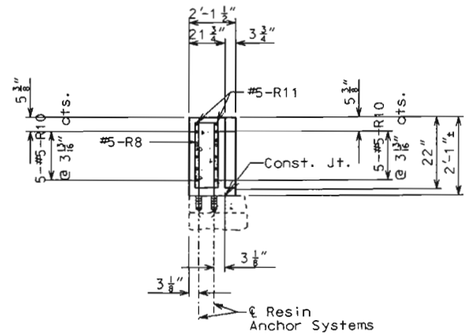

SECTION F-F

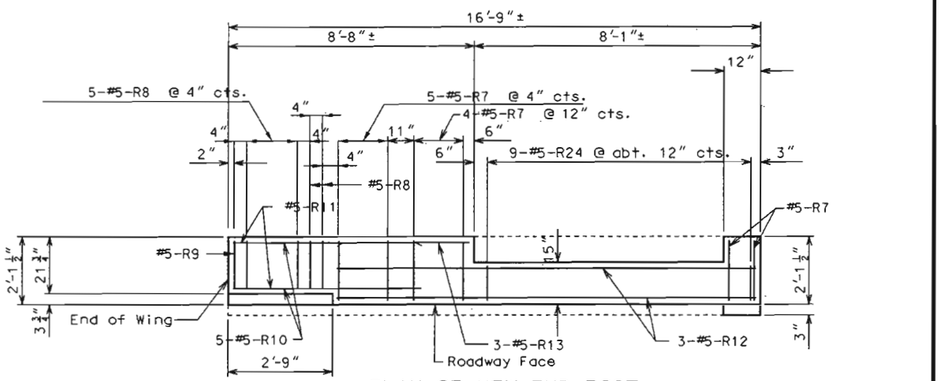

PLAN OF NEW END POST ON WING

Note: Resin anchors not shown in plan for clarity.

✱ As shown on sheet no.7 (Typ.)

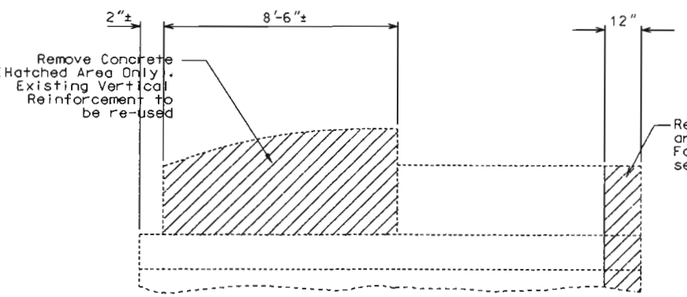

ELEVATION OF EXISTING END POST SHOWING CONCRETE REMOVAL

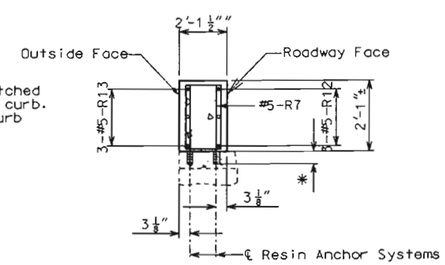

SECTION G-G

①Use alternating resin anchors in existing parapet & curb as shown on sheet no. 7.

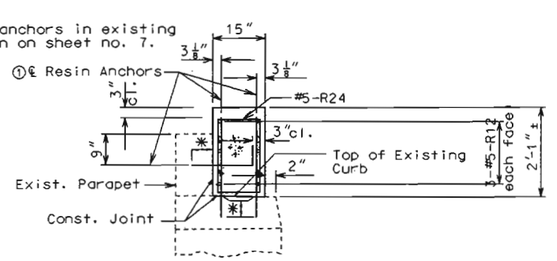

SECTION D-D

STATE OF MISSOURI
GREGORY E. SANDERS
NUMBER E-2000/62467
REGISTERED PROFESSIONAL ENGINEER
DATE 8-22-02

Note: For correct orientation, see sheet nos. 8 & 9.

TYPICAL DETAILS OF END POST BLOCKOUT ON WING "A" & "D"

DETAILED MAR. 2002
CHECKED JULY 2002

NOTE: THIS DRAWING IS NOT TO SCALE. FOLLOW DIMENSIONS.

SHEET NO. 12 OF 18

JACKSON COUNTY

A09912

STATE	PROJ. NO.	SHEET NO.
MO.		844

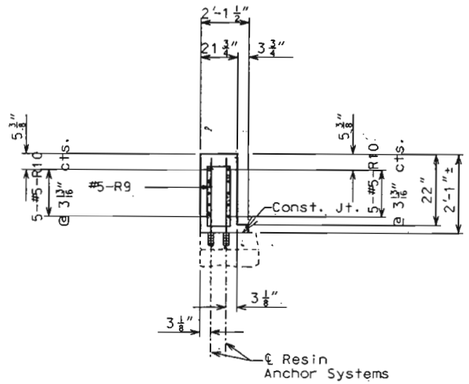

SECTION E-E

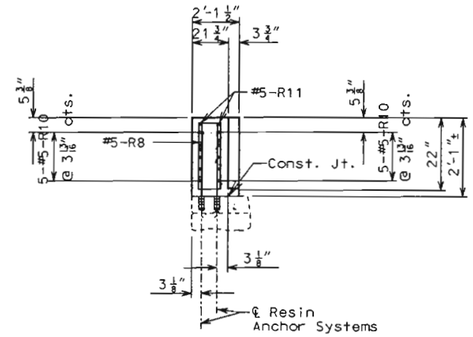

SECTION F-F

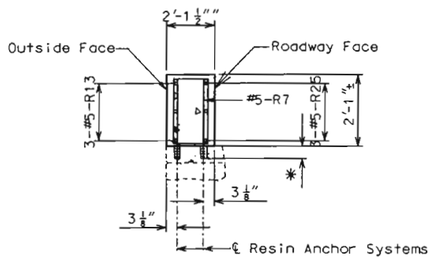

SECTION G-G

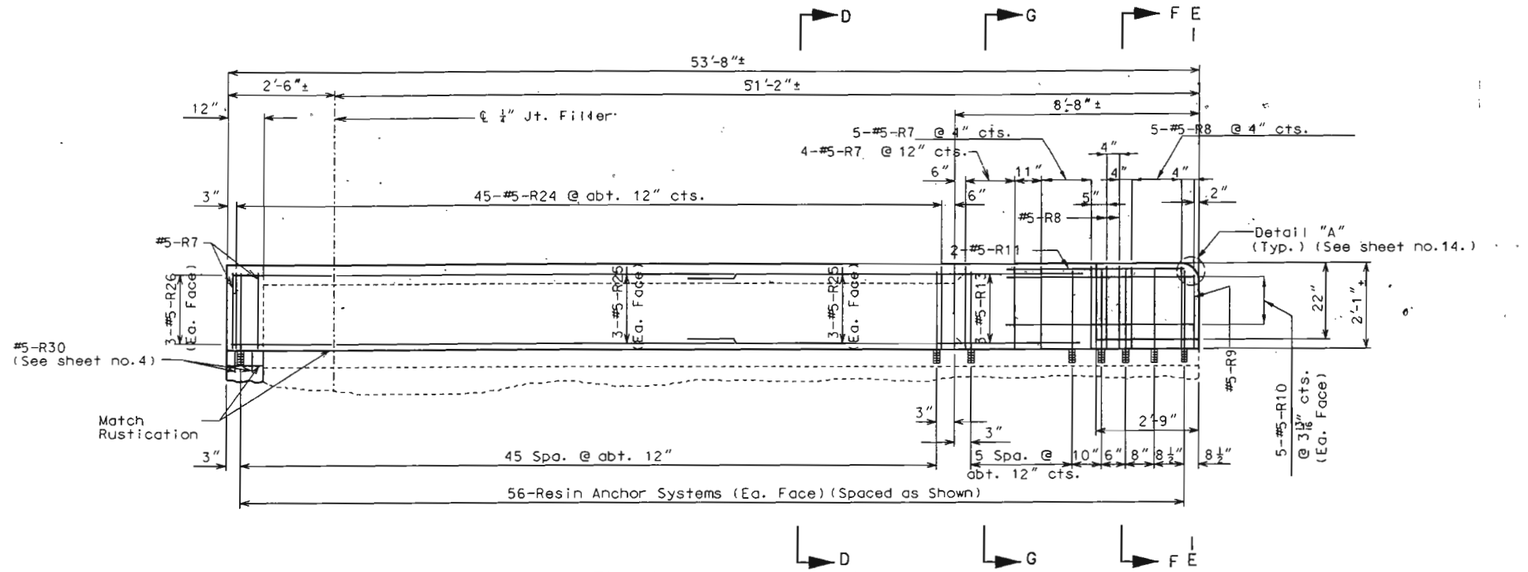

ELEVATION OF NEW END POST ON WING

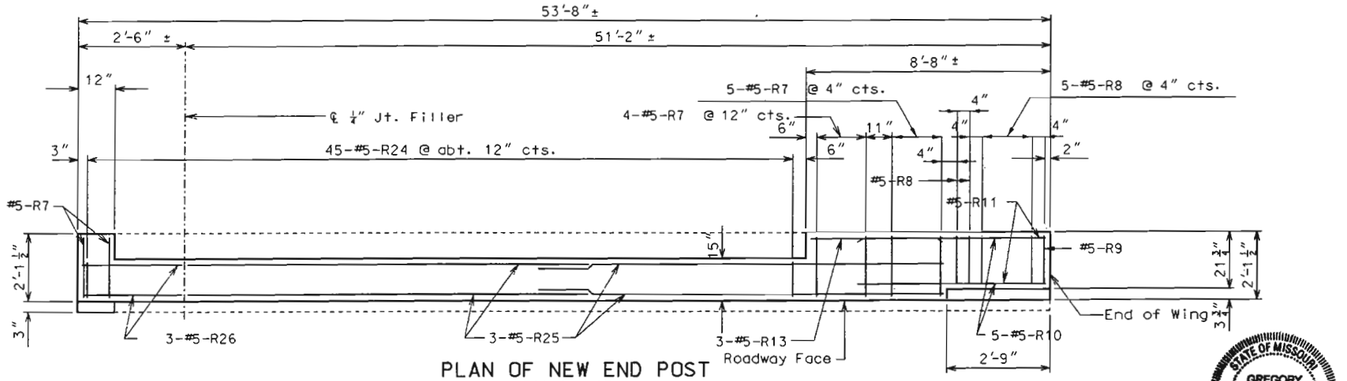

PLAN OF NEW END POST ON WING

Note: Resin anchors not shown in plan for clarity.

✳ As shown on sheet no. 7 (Typ.)

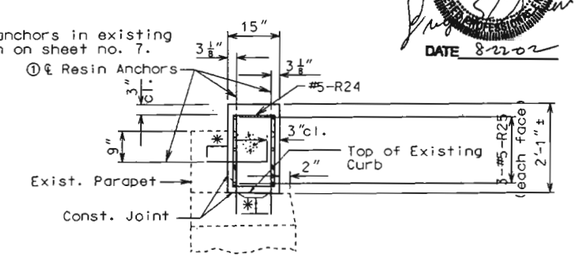

SECTION D-D

Notes:
For correct orientation, see sheet no. 8
For details of end post not shown see sheet no.14.
Use a minimum lap of 3'-0" for #5-R horizontal curb blockout bars.

STATE OF MISSOURI
GREGORY E. SANDERS
NUMBER E-2003162167
REGISTERED PROFESSIONAL ENGINEER
DATE 8-22-02

DETAILED MAR. 2002
CHECKED July 2002

TYPICAL DETAILS OF END POST BLOCKOUT ON WING "B"

NOTE: THIS DRAWING IS NOT TO SCALE. FOLLOW DIMENSIONS.

JACKSON COUNTY

A09912

STATE	PROJ. NO.	SHEET NO.
MO.		845

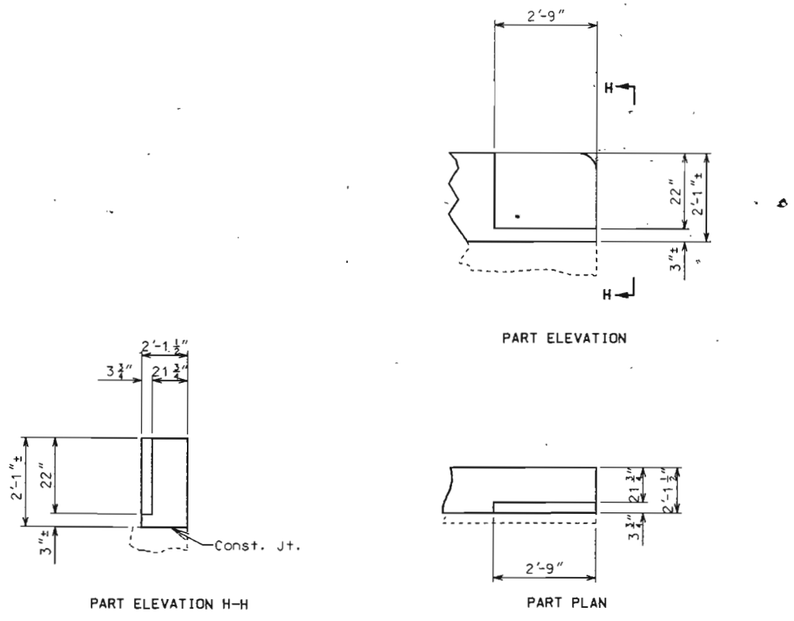

DETAILS OF GUARD RAIL ATTACHMENT

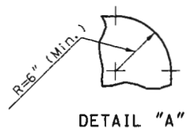

DETAIL "A"

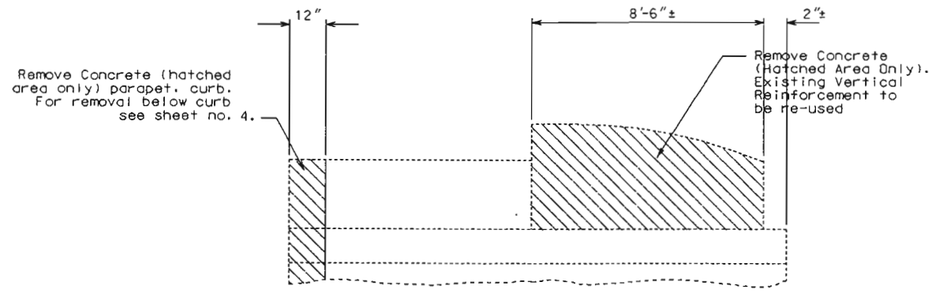

ELEVATION OF EXISTING END
POST SHOWING CONCRETE REMOVAL

STATE OF MISSOURI
GREGORY E. SANDERS
NUMBER E-2000162187
REGISTERED PROFESSIONAL ENGINEER
DATE 8-22-02

DETAILED MAR. 2002
CHECKED July 2002

TYPICAL DETAILS OF END POST BLOCKOUT ON WING "B"

NOTE: THIS DRAWING IS NOT TO SCALE. FOLLOW DIMENSIONS.

JACKSON COUNTY

A09912

STATE	PROJ. NO.	SHEET NO.
MO.		846

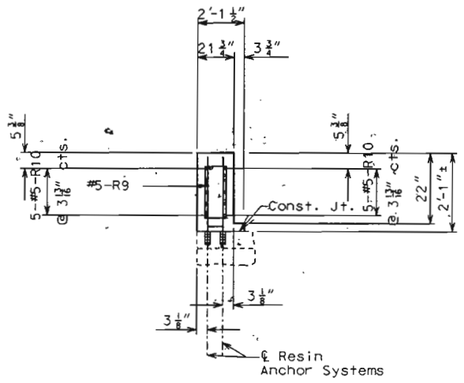

SECTION E-E

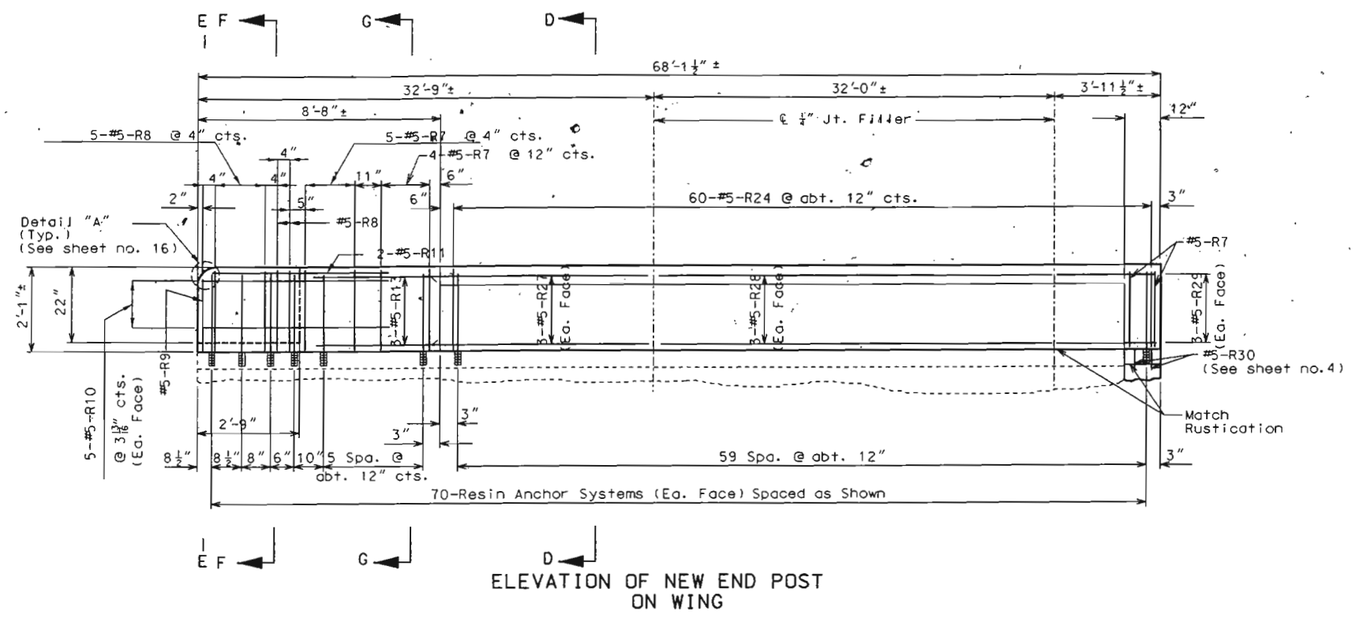

ELEVATION OF NEW END POST ON WING

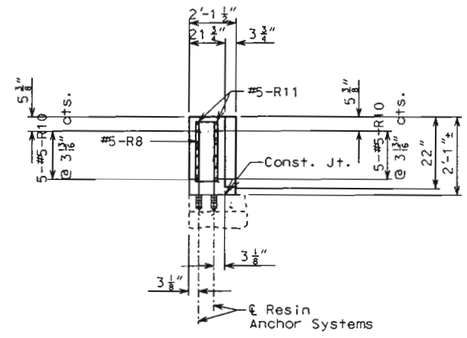

SECTION F-F

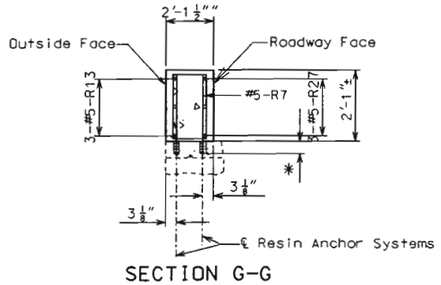

SECTION G-G

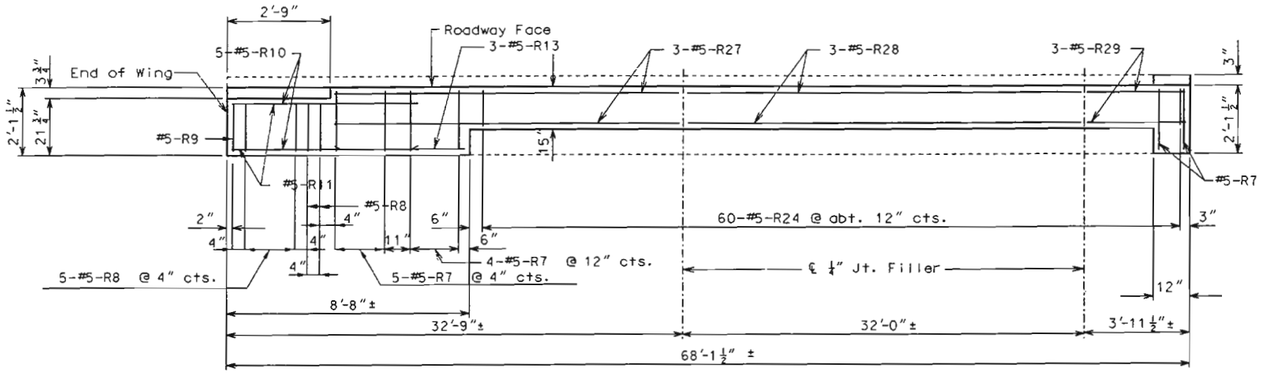

PLAN OF NEW END POST ON WING

Note: Resin anchors not shown in plan for clarity.

✱ As shown on sheet no. 7

Note: For correct orientation, see sheet no. 9. For details of end post not shown, see sheet no. 16.

①Use alternating resin anchors in existing parapet & curb as shown on sheet no. 7.

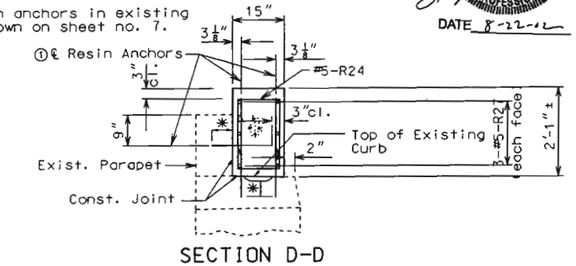

SECTION D-D

STATE OF MISSOURI
GREGORY E. SANDERS
NUMBER E-2001012187
REGISTERED PROFESSIONAL ENGINEER

DATE 8-22-11

DETAILED MAR. 2002
CHECKED July 2002

NOTE: THIS DRAWING IS NOT TO SCALE. FOLLOW DIMENSIONS.

TYPICAL DETAILS OF END POST BLOCKOUT ON WING "C"

SHEET NO. 15 OF 18

JACKSON COUNTY

A09912

STATE	PROJ. NO.	SHEET NO.
MO.		847

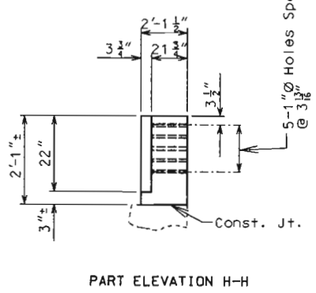

PART ELEVATION H-H

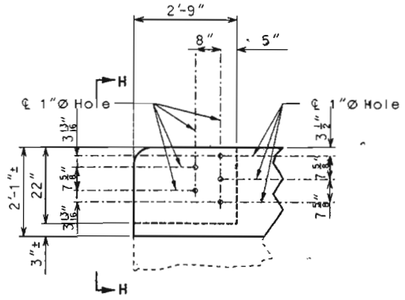

PART ELEVATION

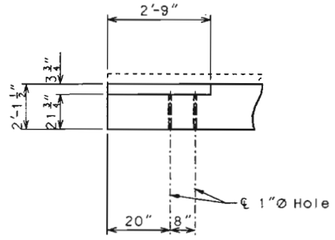

PART PLAN

DETAILS OF GUARD RAIL ATTACHMENT

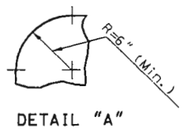

DETAIL "A"

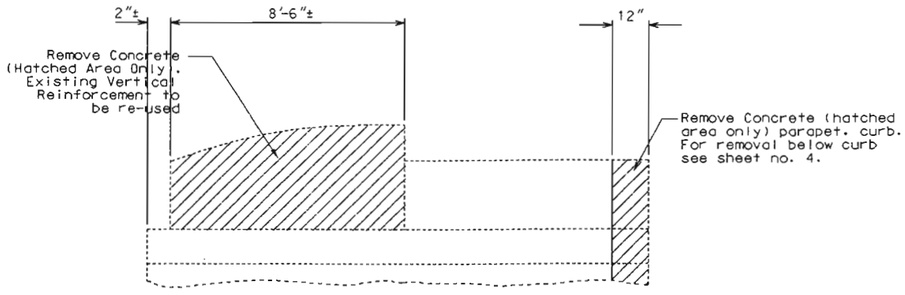

ELEVATION OF EXISTING END POST SHOWING CONCRETE REMOVAL

Notes:

For correct orientation. see sheet no. 9.
For details of end post not shown. see sheet no. 15.

STATE OF MISSOURI
GREGORY E. SANDERS
NUMBER E-2000152157
PROFESSIONAL ENGINEER
DATE 8-22-02

DETAILED MAR. 2002
CHECKED July 2002

TYPICAL DETAILS OF END POST BLOCKOUT ON WING "C"

NOTE: THIS DRAWING IS NOT TO SCALE. FOLLOW DIMENSIONS.

JACKSON COUNTY

A09912

State	Proj. No.	Sheet No.
MO		B48

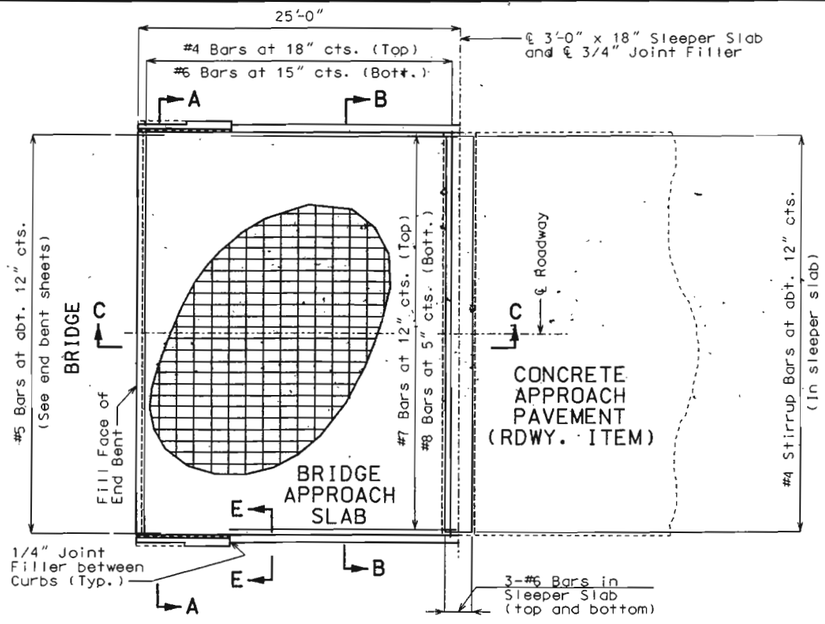

PART PLAN SHOWING REINFORCEMENT

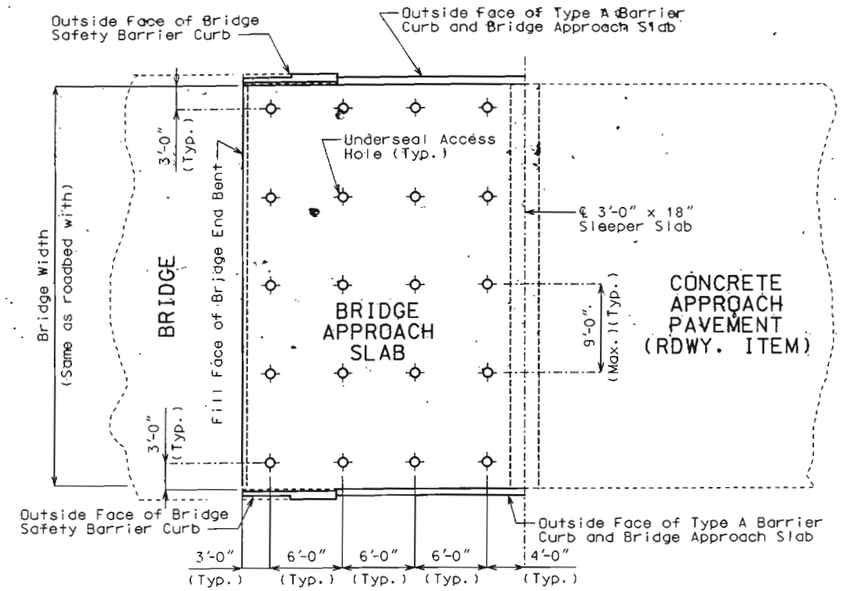

PART PLAN
(SHOWING TYPICAL UNDERSEAL ACCESS HOLE LOCATIONS)

GENERAL NOTES:

All concrete for the bridge approach slab and sleeper slab shall be in accordance with Section 503 (f'c = 4,000 psi) of the Missouri Standard Specifications.

All joint filler shall meet the requirements of Section 1057.2.5 of the Missouri Standard Specifications, except as noted.

The reinforcing steel in the bridge approach slab and the sleeper slab shall be epoxy coated Grade 60 with Fy = 60,000 psi.

Minimum clearance to reinforcing steel shall be 1-1/2", unless otherwise shown.

The reinforcing steel in the bridge approach slab and the sleeper slab shall be continuous. The transverse reinforcing steel may be made continuous by lap splicing the #4 & #6 bars 18" and 26" respectively.

Mechanical bar splices will be permitted and shall develop at least 125 percent of the specified yield strength of the reinforcing bars being spliced. The contractor shall furnish the Engineer the manufacturer's certification that this requirement is met and is required to follow the manufacturer's recommendation for installation.

Mechanical bar splices shall be epoxy coated in accordance with Section 710 of the Missouri Standard Specifications.

Hooks and bends shall be in accordance with the CRSI Manual of Standard Practice for Detailing Reinforced Concrete Structures. Stirrup and Tie Dimensions.

The contractor shall pour and satisfactorily finish the bridge slab before pouring the bridge approach slabs.

Longitudinal construction joints in approach slab and sleeper slab shall be aligned with longitudinal construction joints in bridge slab.

Payment for furnishing all materials, labor and excavation necessary to construct the approach slab, including the timber header, sleeper slab, underdrain, Type 5 aggregate base and all other appurtenances and incidental work as shown on this sheet, complete in place, shall be considered as completely covered under the contract unit price for Bridge Approach Slab (Bridge), per sq. yd.

For Concrete Approach Pavement details, see roadway plans.

See Missouri Standard Plans Drawing 609.00 for details of Type A Barrier Curb.

When a lap splice is required for the use of a mechanical bar splice, the minimum lap length shall be 40" for transverse approach slab bar splices.

At the contractor's option, Grade 40 reinforcement may be substituted for the Grade 60 #5 dowel bars connecting the bridge approach slab to the bridge abutment. No additional payment will be made for this substitution.

When Grade 40 reinforcement is substituted for the Grade 60 #5 dowel bars connecting the bridge approach slab to the bridge abutment, the reinforcement may be bent up to 90 degrees with a 2" minimum radius near the abutment to allow compaction of the backfill material near the abutment. Damage to epoxy coating shall be repaired according to Section 710.3.3 of the Missouri Standard Specifications.

Drain pipe may be either 6" diameter corrugated metallic-coated pipe underdrain, 4" diameter corrugated polyvinyl chloride (PVC) drain pipe, or 4" diameter corrugated polyethylene (PE) drain pipe.

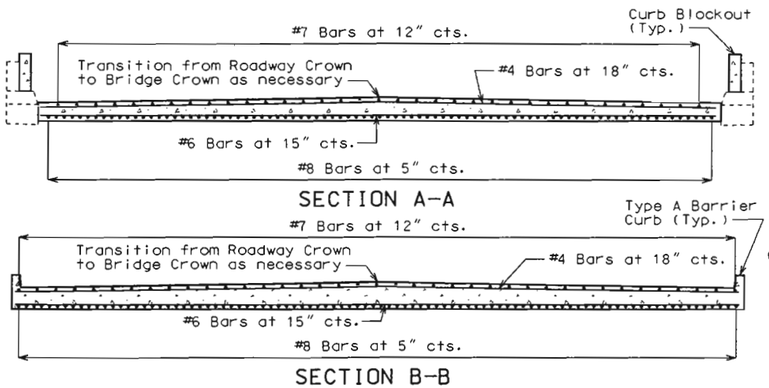

Note: With the approval of the Engineer, the contractor may crown the bottom of the approach slab to match the crown of the roadway surface.

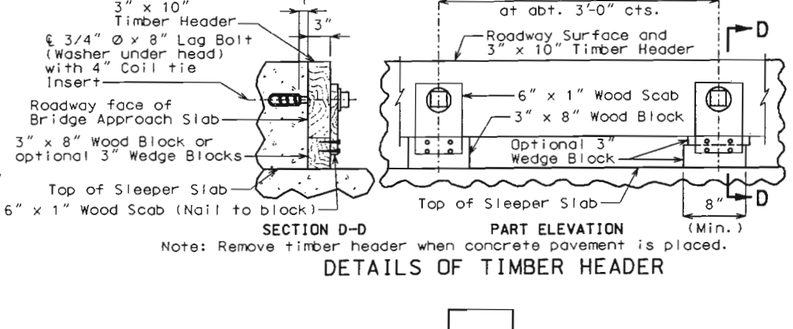

Note: Remove timber header when concrete pavement is placed.

DETAILS OF TIMBER HEADER

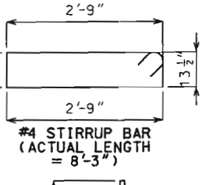

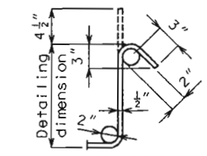

Note:
Nominal lengths are based on out to out dimensions shown in bending diagram and are listed for fabricators use (nearest inch).

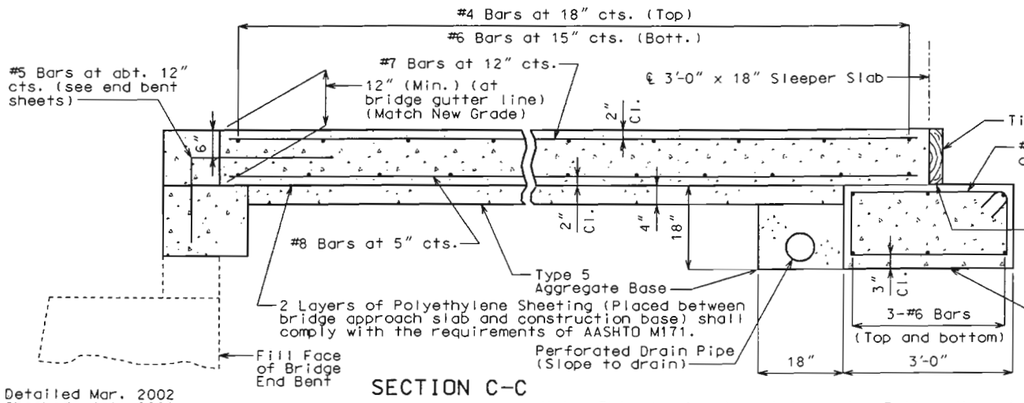

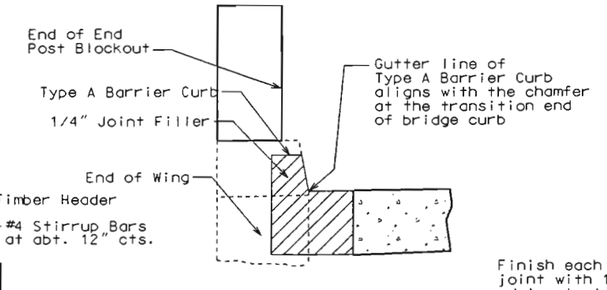

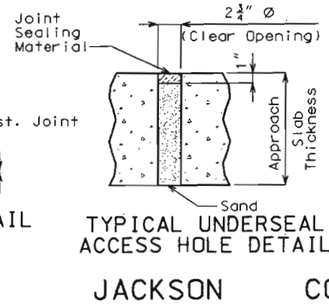

GREGORY E. SANDERS NUMBER E-2000152167 STATE OF MISSOURI REGISTERED PROFESSIONAL ENGINEER
DATE 8-22-02

Detailed Mar. 2002
Checked July 2002

Note: This drawing is not to scale. Follow dimensions.

BRIDGE APPROACH SLAB

Sheet No. 17 of 18

JACKSON COUNTY A09912

BILL OF REINFORCING STEEL

NO. REQ'D.	MARK NO. SIZE	MARK NO. MARK	LOCATION	EPOXY (E)	SHAPE NO.	STIRRUP (S)	SUBSTR. (X)	VARIES (V)	NO. EACH	DIMENSIONS B FT.	B IN.	C FT.	C IN.	D FT.	D IN.	E FT.	E IN.	F FT.	F IN.	H FT.	H IN.	K FT.	K IN.	NOMINAL LENGTH FT.	NOMINAL LENGTH IN.	ACTUAL LENGTH FT.	ACTUAL LENGTH IN.	WEIGHT LBS.
			SUPERSTR.																									
			END BTS 1&7																									
* 6	6	H1	BACKWALL	E	20					26	9.000													26	9	26	9	241
8	6	H2	BARRIER CURB	E	20					26	9.000													26	9	26	9	321
52	5	H3	BACKWALL	E	19					21	000	18	000											3	3	3	2	172
38	4	U1	BACKWALL	E	10	S						18	000	9	000									3	9	3	7	91
38	4	U2	BACKWALL	E	10	S						13	000	15	000									3	5	3	3	82
975	5	R3	BARRIER CURB	E	13	S				12	000	19	750	12	000	19	750							6	3	5	11	6017
12	5	R4	BARRIER CURB	E	20					7	3.000													7	3	7	3	91
36	5	R5	BARRIER CURB	E	20					9	3.000													9	3	9	3	347
72	5	R6	BARRIER CURB	E	20					9	9.000													9	9	9	9	732
44	5	R7	BARRIER CURB	E	13	S				22	500	22	000	22	500	22	000							8	4	8	0	367
28	5	R8	BARRIER CURB	E	13	S				18	750	22	000	18	750	22	000							7	9	7	5	217
4	5	R9	BARRIER CURB	E	13	S				18	750	17	000	18	750	17	000							6	11	6	7	27
40	5	R10	BARRIER CURB	E	20					6	0.000													6	0	6	0	250
8	5	R11	BARRIER CURB	E	20					5	9.000													5	9	5	9	48
* 14	5	R12	BARRIER CURB	E	20					13	9.000													13	9	13	9	201
12	5	R13	BARRIER CURB	E	20					8	5.000													8	5	8	5	105
12	5	R14	BARRIER CURB	E	20					34	1.000													34	1	34	1	427
24	5	R15	BARRIER CURB	E	20					33	3.000													33	3	33	3	832
18	5	R16	BARRIER CURB	E	20					28	1.000													28	1	28	1	527
12	5	R17	BARRIER CURB	E	20					28	9.000													28	9	28	9	360
12	5	R18	BARRIER CURB	E	20					27	8.000													27	8	27	8	346
12	5	R19	BARRIER CURB	E	20					35	3.000													35	3	35	3	441
24	5	R20	BARRIER CURB	E	20					34	7.000													34	7	34	7	866
18	5	R21	BARRIER CURB	E	20					29	2.000													29	2	29	2	548
12	5	R22	BARRIER CURB	E	20					30	0.000													30	0	30	0	375
12	5	R23	BARRIER CURB	E	20					28	8.000													28	8	28	8	359
123	5	R24	BARRIER CURB	E	13	S				12	000	20	500	12	000	20	500							6	4	6	0	770
12	5	R25	BARRIER CURB	E	20					26	10.000													26	10	26	10	336
6	5	R26	BARRIER CURB	E	20					2	3.000													2	3	2	3	14
6	5	R27	BARRIER CURB	E	20					29	2.000													29	2	29	2	183
6	5	R28	BARRIER CURB	E	20					31	9.000													31	9	31	9	199
6	5	R29	BARRIER CURB	E	20					3	8.000													3	8	3	8	23
8	5	R30	BARRIER CURB	E	10							18	000	2	1.500									5	2	4	11	41
			TOTALS																									
	4			E																								173
	5			E																								15221
	6			E																								562
			TOTAL																									0
			TOTAL	E																								15956
			Slab on																									
			Girder																									
	4			E																								173

BILL OF REINFORCING STEEL

NO. REQ'D.	MARK NO. SIZE	MARK NO. MARK	LOCATION	EPOXY (E)	SHAPE NO.	STIRRUP (S)	SUBSTR. (X)	VARIES (V)	NO. EACH	DIMENSIONS B FT.	B IN.	C FT.	C IN.	D FT.	D IN.	E FT.	E IN.	F FT.	F IN.	H FT.	H IN.	K FT.	K IN.	NOMINAL LENGTH FT.	NOMINAL LENGTH IN.	ACTUAL LENGTH FT.	ACTUAL LENGTH IN.	WEIGHT LBS.
	5			E																								172
	6			E																								241
			TOTAL																									586
			Safety																									
			Barrier																									
			Curb																									
	5			E																								15049
	6			E																								321
			TOTAL																									15370

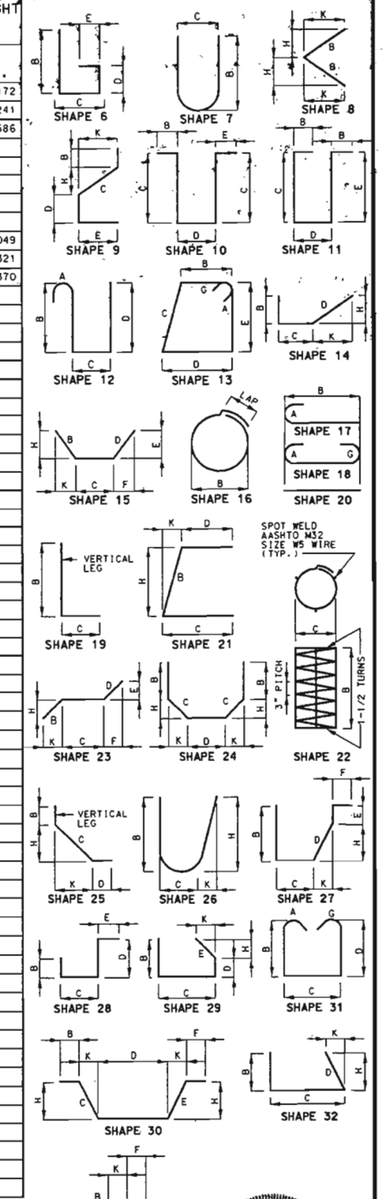

BENDING DIAGRAMS

State	Proj. No.	Sheet No.
MO		B49

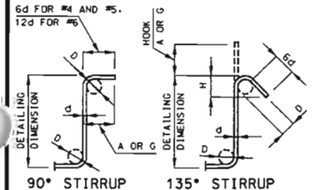

STIRRUP HOOK DIMENSIONS

GRADES 40 - 50 - 60 KSI

BAR SIZE	D (IN.)	90° HOOK: HOOK A OR G	90° HOOK: APPROX. H	135° HOOK: HOOK A OR G	135° HOOK: APPROX. H
#4	2"	4-1/2"	4-1/2"	4-1/2"	3"
#5	2-1/2"	6"	5-1/2"	5-1/2"	3-3/4"
#6	4-1/2"	12"	8"	8"	4-1/2"

NOTE: UNLESS OTHERWISE NOTED DIAMETER "D" IS THE SAME FOR ALL BENDS AND HOOKS ON A BAR.

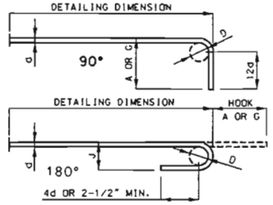

END HOOK DIMENSIONS

BAR SIZE	D (IN.)	ALL GRADES: 180° HOOKS: A OR G	180° HOOKS: J	90° HOOKS: A OR G
#3	2-1/4"	5"	3"	6"
#4	3"	6"	4"	8"
#5	3-3/4"	7"	5"	10"
#6	4-1/2"	8"	6"	12"
#7	5-1/4"	10"	7"	14"
#8	6"	11"	8"	16"
#9	9-1/2"	15"	11-3/4"	19"
#10	10-3/4"	17"	13-1/4"	22"
#11	12"	19"	14-3/4"	2'-0"
#14	18-1/4"	2'-3"	21-3/4"	2'-7"

TWO ADDITIONAL #6H1 & #5R12 ARE INCLUDED IN THE BAR BILL FOR TESTING.

NOTE:
ALL STANDARD HOOKS AND BENDS OTHER THAN 180 DEG. TO BE BENT WITH THE SAME PROCEDURE AS FOR 90 DEG. STD. HOOKS.
HOOKS AND BENDS SHALL BE IN ACCORDANCE WITH THE PROCEDURES AS SHOWN ON THIS SHEET.
E = EPOXY COATED REINFORCEMENT.
S = STIRRUP.
X = BAR IS INCLUDED IN SUBSTRUCTURE QUANTITIES.
V = BAR DIMENSIONS VARY IN EQUAL INCREMENTS BETWEEN DIMENSIONS SHOWN ON THIS LINE AND THE FOLLOWING LINE.
NO. EA. = NUMBER OF BARS OF EACH LENGTH.
NOMINAL LENGTHS ARE BASED ON OUT TO OUT DIMENSIONS SHOWN IN BENDING DIAGRAMS AND ARE LISTED FOR FABRICATOR'S USE (NEAREST INCH).
ACTUAL LENGTHS ARE MEASURED ALONG CENTERLINE BAR TO THE NEAREST INCH.
PAYWEIGHTS ARE BASED ON ACTUAL LENGTHS.
FOUR ANGLE OR CHANNEL SPACERS ARE REQUIRED FOR EACH COLUMN SPIRAL. SPACERS ARE TO BE PLACED ON INSIDE OF SPIRALS. LENGTH AND WEIGHT OF COLUMN SPIRALS DO NOT INCLUDE SPLICES OR SPACERS.
REINFORCING STEEL (GRADE 60) = FY 60,000 PSI.

STATE OF MISSOURI
GREGORY E. SANDERS
NUMBER E-2000162187
REGISTERED PROFESSIONAL ENGINEER
DATE 8-22-02

DETAILED JULY 2002
CHECKED JULY 2002

NOTE: THIS DRAWING IS NOT TO SCALE. FOLLOW DIMENSIONS.

SHEET NO. 18 OF 18

JACKSON COUNTY

A09912

MISSOURI HIGHWAY AND TRANSPORTATION COMMISSION

State	Proj. No.	Sheet No.
MO	J4I0712	B16
021115-407	I-435-1(277)	
SEC/SUR 19	TWP 49N RGE 32W	

U.I.P. (75'-85'-85'-100'-75'-60') CONTINUOUS CONCRETE BOX GIRDER SPANS

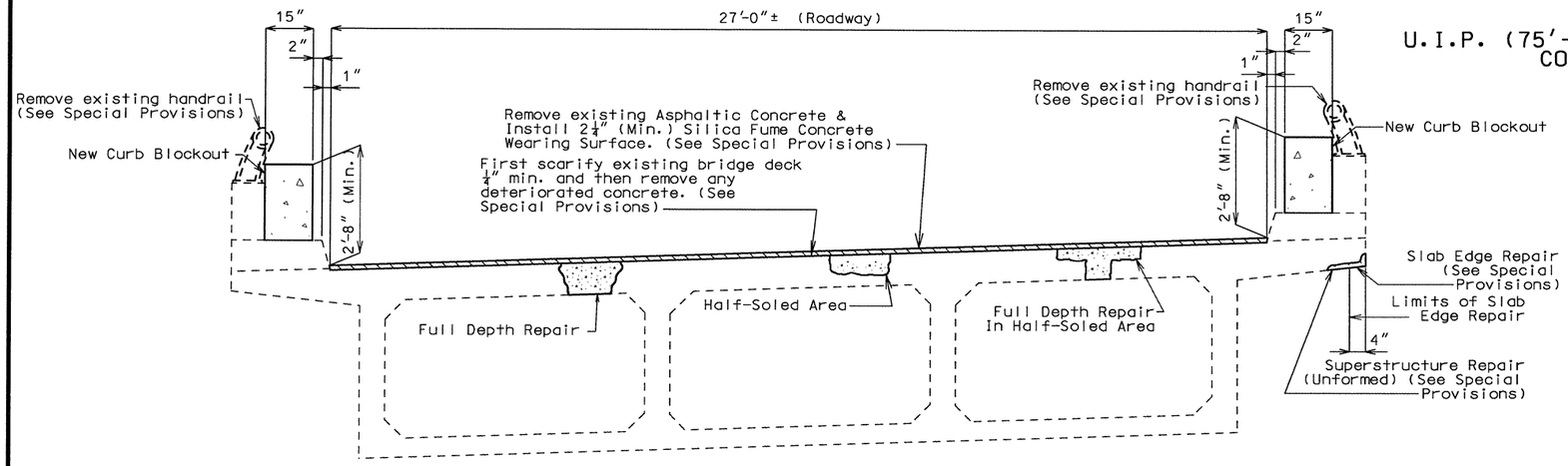

SECTION THRU SLAB

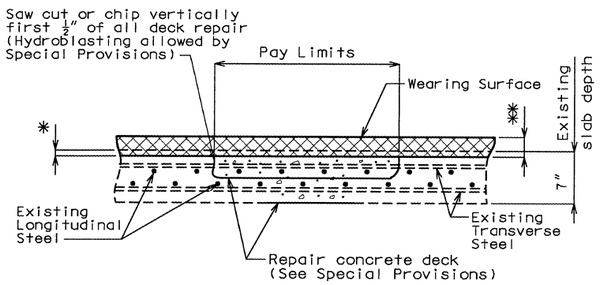

* First Scarify existing bridge deck ¼" min. and then remove any deteriorated concrete. (See Special Provisions)

** 2¼" (min.) Low Slump Concrete Wearing Surface

HALF-SOLED AREA

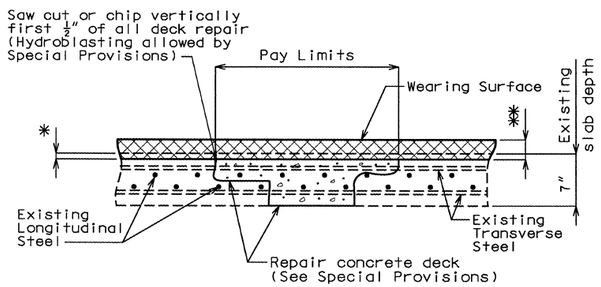

* First Scarify existing bridge deck ¼" min. and then remove any deteriorated concrete. (See Special Provisions)

** 2¼" (min.) Low Slump Concrete Wearing Surface

FULL DEPTH REPAIR IN HALF-SOLED AREA

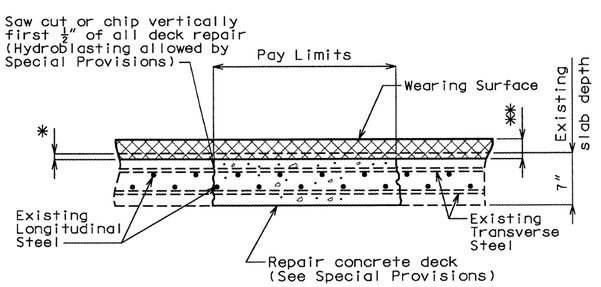

* First Scarify existing bridge deck ¼" min. and then remove any deteriorated concrete (See Special Provisions)

** 2¼" (min.) Low Slump Concrete Wearing Surface

FULL DEPTH REPAIR

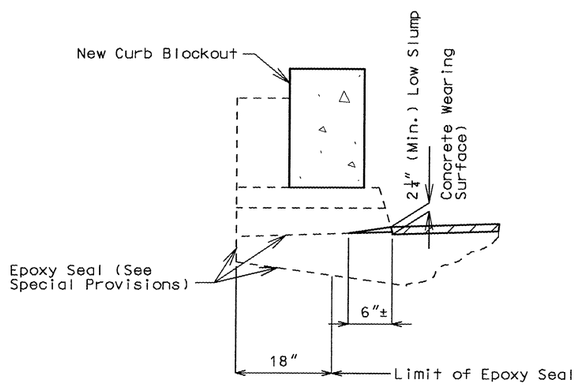

TYPICAL SECTION THRU CURB OUTLET

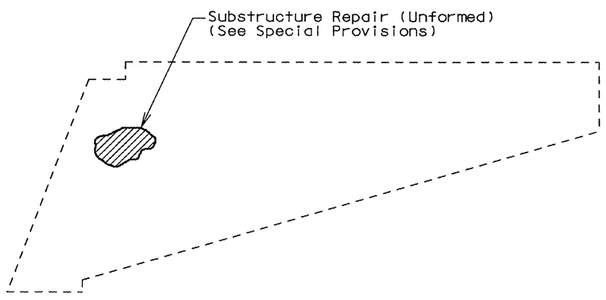

DETAIL OF END BENT WING SHOWING SUBSTRUCTURE REPAIR AT BENT NOS. 1 & 7

FINAL PLANS

I CERTIFY THAT THIS PLAN SHEET ACCURATELY DEPICTS THE CONFIGURATION AND LOCATION OF THE ROADWAY AND ALL ITS APPURTENANT FEATURES, TO THE BEST OF MY KNOWLEDGE, AS I AND MY STAFF HAVE OBSERVED THE CONTRACTOR'S CONSTRUCTION OF THIS PROJECT. I SPECIFICALLY DISCLAIM ANY RESPONSIBILITY FOR THE DESIGN OF THIS PROJECT, EXCEPT AS I AND MY STAFF MAY HAVE MODIFIED OR AUTHORIZED THE MODIFICATION OF THE PROJECT DESIGN DURING ITS CONSTRUCTION; AND I DISCLAIM RESPONSIBILITY FOR THE CONTRACTOR'S ACTUAL CONSTRUCTION OF THE PROJECT, EXCEPT AS I AND MY STAFF MAY HAVE DIRECTED OR ORDERED THAT THE PROJECT BE CONSTRUCTED.

STATE OF MISSOURI
KIRSTEN MUNCK
NUMBER PE-2003001076
PROFESSIONAL ENGINEER

SIGNATURE

4-25-05
DATE

Note: For General Notes & Quantities, see sheet no. 2.

REPAIRS TO BRIDGE (RAMP "G") OVER RTE. I-70 AND RAMP "H"

STATE ROAD FROM RTE. 350 NORTH TO RTE. 40

ABOUT 0.5 MILE SOUTH OF RTE. 40

PROJECT NO. STA. 8+82.97± (match existing)

JOB NO. J4I0712 RTE. I-435

JACKSON COUNTY

Date: / /

STD. 609.00
STD. 706.35
A09912 REV.

Designed Mar. 2002
Detailed Mar. 2002
Checked July 2002

Note: This drawing is not to scale. Follow dimensions.

J:\PROJECTS\J4I0712\MicroStation\Bridge\J4I0712\A09912\a09912_001.dgn 12:38:40 PM 02/28/2005

State	Proj. No.	Sheet No.
MO	J410712	B17
021115-407	I-435-1(277)	

QUANTITIES

ITEM		TOTAL
Asphalt Removal (Bridges)	sq. ft.	12,914
Replacement of Expansion Device and Adjacent Concrete	lin. ft.	54
Removal of Existing Bridge Rails	lin. ft.	1085
Bridge Approach Slab (Bridge)	sq. yd.	151
Substructure Repair (Unformed)	sq. ft.	12
Superstructure Repair (Unformed)	sq. ft.	33
Protective Coating for Concrete Bents and Concrete Piers under Expansion Devices	lump sum	1
Curb Blockout	lin. ft.	1118
Repairing Concrete Deck (Half-Soling)	sq. ft.	9608
Full Depth Repair	sq. ft.	2050
Slab Edge Repair (Bridges)	lin. ft.	21
Silica Fume Concrete Wearing Surface	sq. yd.	1435
Strip Seal Expansion Joint System	lin. ft.	54
Cleaning and Coating Existing Bearings	ea.	8
Drainage System (On Structure) - Payment for Fabrication and Delivery	lump sum	0
Transporting Lead Contaminated Residue To Storage Area	lump sum	1
Transporting Lead Contaminated Residue To The Smelter	lump sum	1
Disposal of Lead Contaminated Residue	lump sum	1

Notes:

Payment for the removal and replacement of any end posts, shall be included in contract unit price for Curb Blockout per lin. ft.

Removal of concrete and reinforcing at End Bent Nos. 1 and 7 shall be completely covered in the contract unit price for Replacement of Expansion Device and Adjacent Concrete per lin. ft.(See Special Provisions).

All concrete and reinforcing required for replacement of backwall, curbs and parapets necessary for placement of strip seal expansion devices at End Bent Nos. 1 & 7 shall be completely covered in the contract unit price for Replacement of Expansion Device and Adjacent Concrete per lin. ft. (See Special Provisions).

Removal of existing Bridge Approach Slabs shall be considered a Roadway Item.

FINAL PLANS

I CERTIFY THAT THIS PLAN SHEET ACCURATELY DEPICTS THE CONFIGURATION AND LOCATION OF THE ROADWAY AND ALL ITS APPURTENANT FEATURES, TO THE BEST OF MY KNOWLEDGE, AS I AND MY STAFF HAVE OBSERVED THE CONTRACTOR'S CONSTRUCTION OF THIS PROJECT. I SPECIFICALLY DISCLAIM ANY RESPONSIBILITY FOR THE DESIGN OF THIS PROJECT, EXCEPT AS I AND MY STAFF MAY HAVE MODIFIED OR AUTHORIZED THE MODIFICATION OF THE PROJECT DESIGN DURING ITS CONSTRUCTION; AND I DISCLAIM RESPONSIBILITY FOR THE CONTRACTOR'S ACTUAL CONSTRUCTION OF THE PROJECT, EXCEPT AS I AND MY STAFF MAY HAVE DIRECTED OR ORDERED THAT THE PROJECT BE CONSTRUCTED.

SIGNATURE

4-25-05
DATE

STATE OF MISSOURI
KIRSTEN MUNCK
4-25-05
NUMBER PE-2003001076
PROFESSIONAL ENGINEER

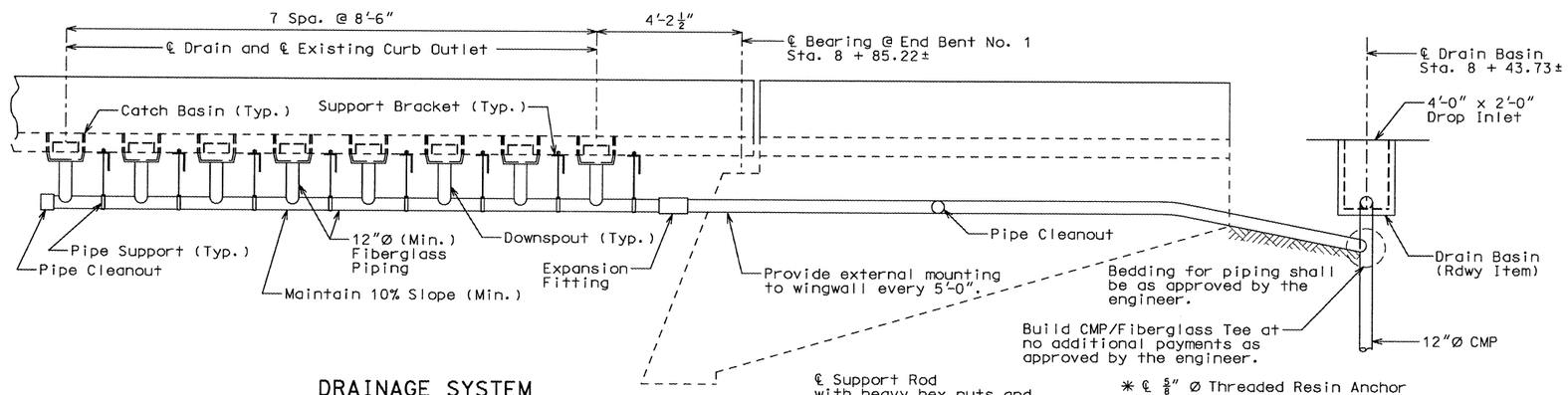

DRAINAGE SYSTEM

Drainage:

A reinforced fiberglass pipe, catch basin and fittings, draining system shall be installed at each curb outlet along left side of deck in first span of bridge. Catch Basins shall be installed at and centered about each curb outlet using no less than four Resin Anchors each.

Drain pipe shall be not less than 12" diameter fiberglass and shall be extended and attached to roadway drain basin (Rdwy Item) (Installed this contract) underground. Connection to drain basin shall be rigid and firmly sealed to allow no leaks. Drain Pipe shall be supported between connections to downspout by hangers attached to bottom of slab or outside of curb and slab (See Special Provisions).

Detailed shop drawings of the drainage system shall be prepared and submitted to the engineer. Shop drawings shall comply with the requirements outlined for shop drawings for structural steel, Sec 712.3.2. Catalog data may be furnished for components which are standard manufactured items in lieu of detailed drawings, providing, governing dimensions are given.

Payment for the above described work including all materials, equipment, tools, labor, installation and all incidental work necessary shall be made and considered completely covered under the contract unit price, per lump sum, for "Drainage System (On Structure)".

Catch basin shall completely enclose existing curb outlet and have sufficient capacity to efficiently channel all drainage water to drain basin.

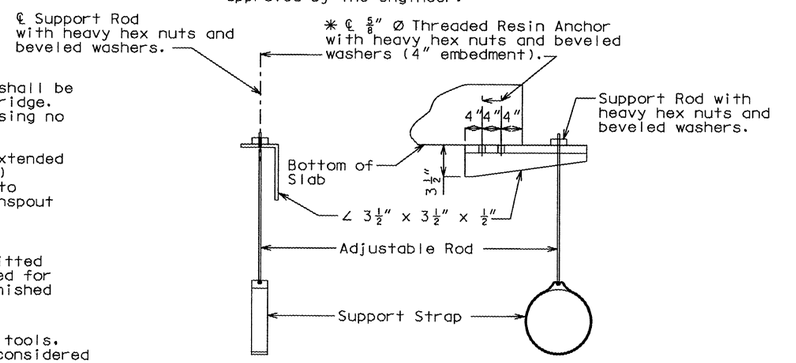

Note: * Avoid connecting support bracket to areas of bottom of slab with new edge repair or superstructure repair.

DETAILS OF DRAINAGE PIPE SUPPORTS

General Notes:

Design Specifications:
AASHTO - 1996 and Interims thru 2000

Design Unit Stresses:
Class B1 Concrete (Curb Blockout, Substructure Repair and Deck Repair) f'c = 4,000 psi
Reinforcing Steel (Grade 60, Epoxy Coated) fy = 60,000 psi

Joint Filler:
All joint filler shall meet the requirements of Section 1057.2.4 of the Missouri Standard Specifications, except as noted.

Reinforcing Steel:

Minimum clearance to reinforcing steel shall be 1½", unless otherwise shown.

Bars bonded in old concrete not removed shall be cleanly stripped and embedded into new concrete where possible. If length is available, old bars shall extend into new concrete at least 40 diameters for smooth bars and 30 diameters for deformed bars, unless otherwise noted.

Traffic:
Bridge will be closed to traffic during construction.

Curb Blockouts:
Measurement of Curb Blockout is to the nearest linear foot, measured along outside of slab for left and right curb blockouts. For limits of Curb Blockout, see sheet nos. 8 and 9.

All exposed edges of Curb Blockout shall have ½" radius or ⅜" bevel unless otherwise shown.

Payment for concrete, reinforcing steel, resin anchors, and any other work incidental to the curb blockouts, complete-in-place, shall be included in the contract unit price for Curb Blockout per linear foot.

Cost of any concrete curb and parapet repair shall be considered completely covered in the contract unit price for Curb Blockout.

All reinforcement shall be epoxy coated.

Existing handrail shall be removed and will be considered the property of the contractor.

Resin Anchors:
The contractor shall use one of the resin anchor systems listed in the Job Special Provisions. These anchor systems shall be installed according to the manufacturer's specifications, except as modified by the Job Special Provisions.

Cost of furnishing and installing the anchor system complete in place shall be included in the contract unit price for Curb Blockout.

The ⅝" diameter resin anchor systems shall have a minimum ultimate pullout strength of 15,500 lbs. in concrete with f'c = 4,000 psi. (See Special Provisions).

An epoxy coated #5 Grade 60 reinforcing bar shall be substituted for the ⅝"Ø threaded rod stud. For shape and length of reinforcing bar, see sheet no. 7, 12 thru 16.

Miscellaneous:
Outline of old work is indicated by dashed lines. Heavy lines indicate new work.

Contractor shall verify all dimensions in field before ordering new material.

Roadway surfacing adjacent to bridge ends to match bridge overlay.

In order to maintain grade and a minimum thickness of overlay as shown on plans, it may be necessary to use additional quantities of overlay at various locations throughout the structure. No payment will be allowed for additional labor, materials or equipment for variations in thickness of overlay.

Contractor shall verify that bottom slab access doors at bottom of box girders and bottom of slab drains are in working condition and that work in this contract does not impair their function (see original plans for details). Cost shall be considered incidental to other pay items.

Detailed Mar. 2002
Checked July 2002

Note: This drawing is not to scale. Follow dimensions.

J:\PROJECTS\J410712\MicroStation\Bridge\J410712\A09912\a09912_002.dgn 06:53:05 AM 03/08/2005

State	Proj. No.	Sheet No.
MO	J4I0712	B18
021115-407	I-435-1(277)	

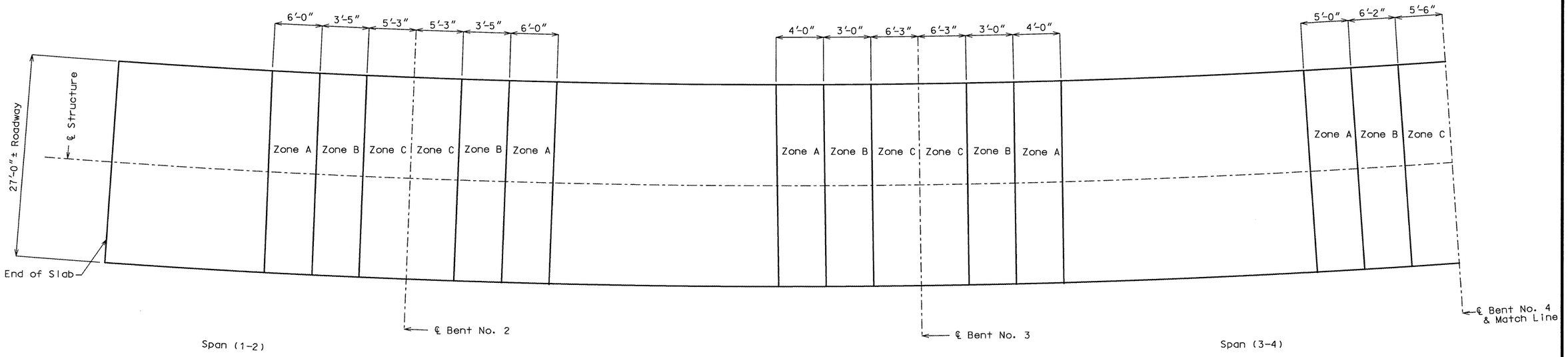

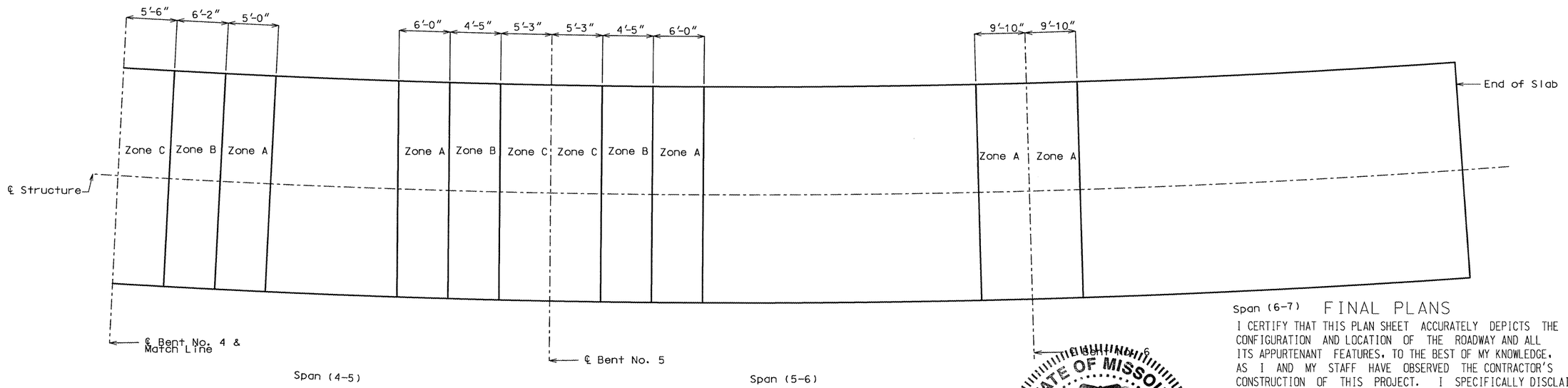

Note:

Zones with the same letter designation may be repaired at the same time except for the zones directly adjacent to the centerline of bent. Sequence of repairs follows Zone A, Zone B then Zone C in alphabetical order. If either of the zones adjacent to centerline of bent has a single repair area of over 10 square feet or a total repair area of over 20 square feet, that zone shall be repaired before removing concrete in the other zone of the same designation at that bent.

Any repair in the remainder of the bridge that is within 42" of Zone A shall be completed before removing old concrete in Zone A.

PLAN OF SLAB SHOWING SPECIAL REPAIR ZONES

STATE OF MISSOURI
KIRSTEN MUNCK
NUMBER PE-2003001076
PROFESSIONAL ENGINEER

FINAL PLANS

I CERTIFY THAT THIS PLAN SHEET ACCURATELY DEPICTS THE CONFIGURATION AND LOCATION OF THE ROADWAY AND ALL ITS APPURTENANT FEATURES, TO THE BEST OF MY KNOWLEDGE, AS I AND MY STAFF HAVE OBSERVED THE CONTRACTOR'S CONSTRUCTION OF THIS PROJECT. I SPECIFICALLY DISCLAIM ANY RESPONSIBILITY FOR THE DESIGN OF THIS PROJECT, EXCEPT AS I AND MY STAFF MAY HAVE MODIFIED OR AUTHORIZED THE MODIFICATION OF THE PROJECT DESIGN DURING ITS CONSTRUCTION; AND I DISCLAIM RESPONSIBILITY FOR THE CONTRACTOR'S ACTUAL CONSTRUCTION OF THE PROJECT, EXCEPT AS I AND MY STAFF MAY HAVE DIRECTED OR ORDERED THAT THE PROJECT BE CONSTRUCTED.

SIGNATURE 4-25-05 DATE

State	Proj. No.	Sheet No.
MO	J4I0712	B19
021115-407	I-435-1(277)	

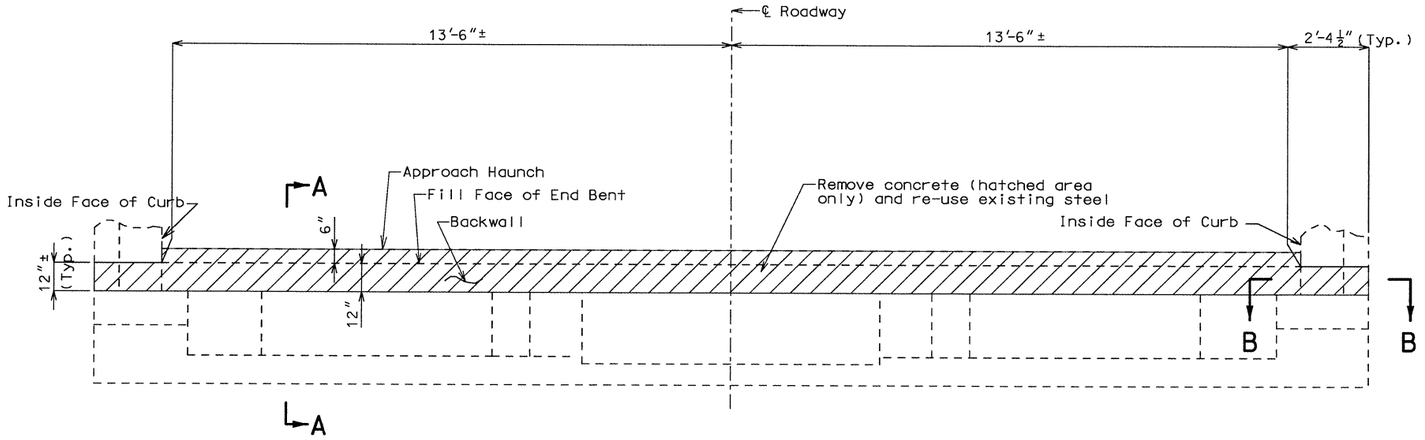

PART PLAN OF END BENT SHOWING EXISTING CONCRETE REMOVAL

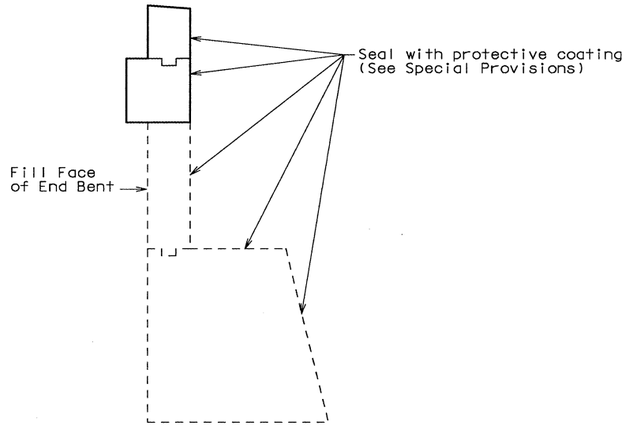

SECTION THRU END BENT
SHOWING PROTECTIVE COATING LIMITS

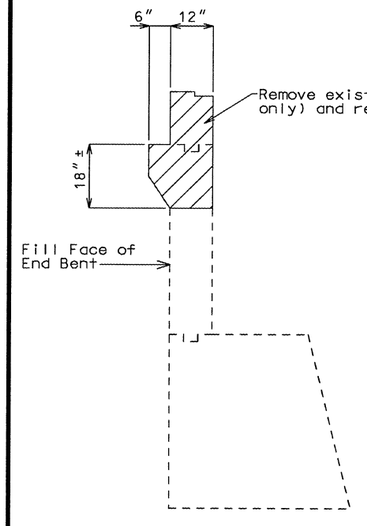

SECTION A-A
(SHOWING EXISTING CONCRETE REMOVAL)

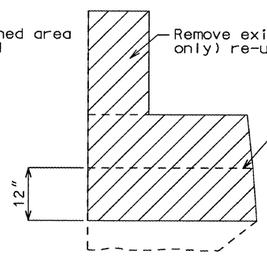

SECTION B-B
(SHOWING EXISTING CONCRETE REMOVAL)

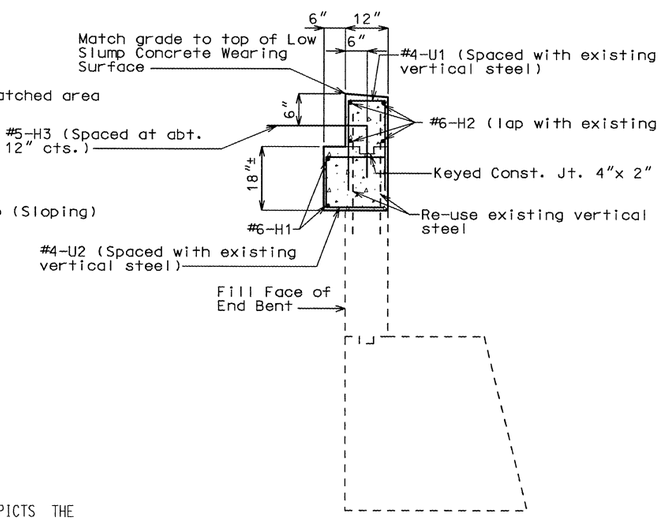

SECTION A-A
(SHOWING CONCRETE REPLACEMENT)

Note: For expansion device placement in backwall, see sheet nos. 5 & 6.

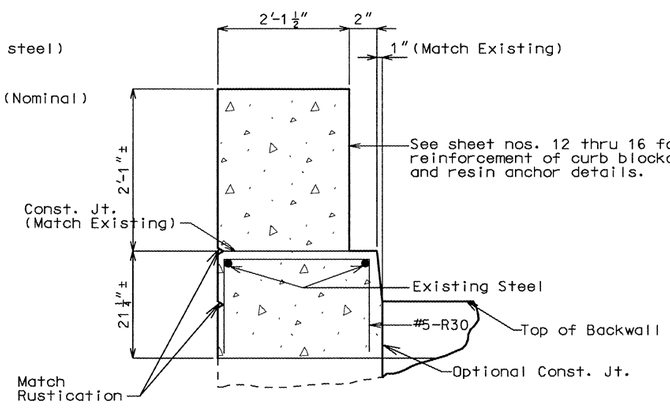

SECTION B-B
(SHOWING CONCRETE REPLACEMENT)

Notes: Concrete for replacement shall be Class B-1.
For details of strip seal expansion device replacement, see sheet nos. 5 and 6.

Payment for removal and replacement of curb and parapets shall be completely covered in the contract unit price for Replacement of Expansion Device and Ajacent Concrete (See Special Provisions).

All new reinforcing steel shall be epoxy coated.

FINAL PLANS

I CERTIFY THAT THIS PLAN SHEET ACCURATELY DEPICTS THE CONFIGURATION AND LOCATION OF THE ROADWAY AND ALL ITS APPURTENANT FEATURES, TO THE BEST OF MY KNOWLEDGE, AS I AND MY STAFF HAVE OBSERVED THE CONTRACTOR'S CONSTRUCTION OF THIS PROJECT. I SPECIFICALLY DISCLAIM ANY RESPONSIBILITY FOR THE DESIGN OF THIS PROJECT, EXCEPT AS I AND MY STAFF MAY HAVE MODIFIED OR AUTHORIZED THE MODIFICATION OF THE PROJECT DESIGN DURING ITS CONSTRUCTION; AND I DISCLAIM RESPONSIBILITY FOR THE CONTRACTOR'S ACTUAL CONSTRUCTION OF THE PROJECT, EXCEPT AS I AND MY STAFF MAY HAVE DIRECTED OR ORDERED THAT THE PROJECT BE CONSTRUCTED.

SIGNATURE

4-25-05
DATE

STATE OF MISSOURI
KIRSTEN MUNCK
NUMBER PE-2003001076
PROFESSIONAL ENGINEER

TYPICAL DETAILS FOR END BENT NOS. 1 & 7

Detailed Mar. 2002
Checked July 2002

Note: This drawing is not to scale. Follow dimensions.

J:\PROJECTS\J4I0712\MicroStation\Bridge\J4I0712\A09912\a09912_004.dgn 02:26:13 PM 02/25/2005

State	Proj. No.	Sheet No.
MO	J4I0712	B20
021115-407	I-435-1(277)	

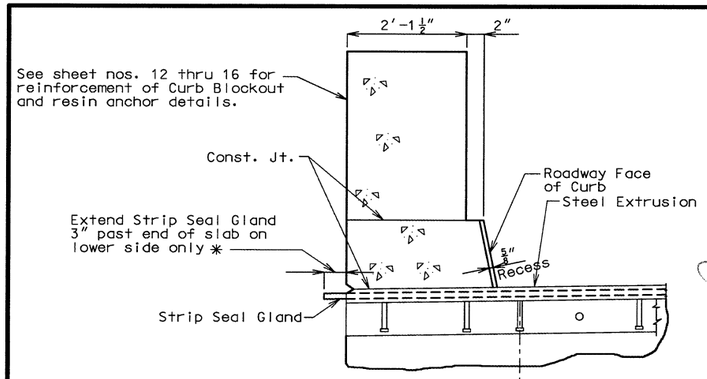

✱Note: Provide splash protection for erosion control on finish ground line if required by the engineer (Roadway Item).

PART SECTION D-D

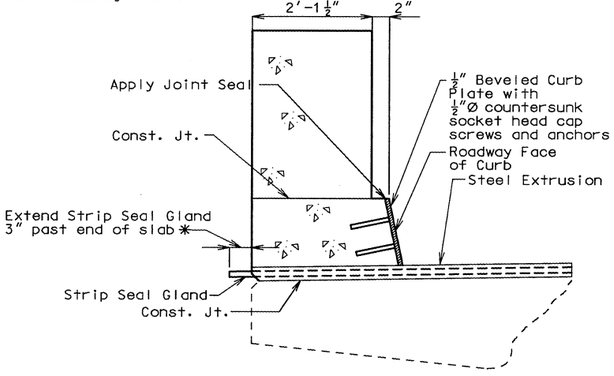

PART SECTION E-E (SHOWING CONCRETE REPLACEMENT)

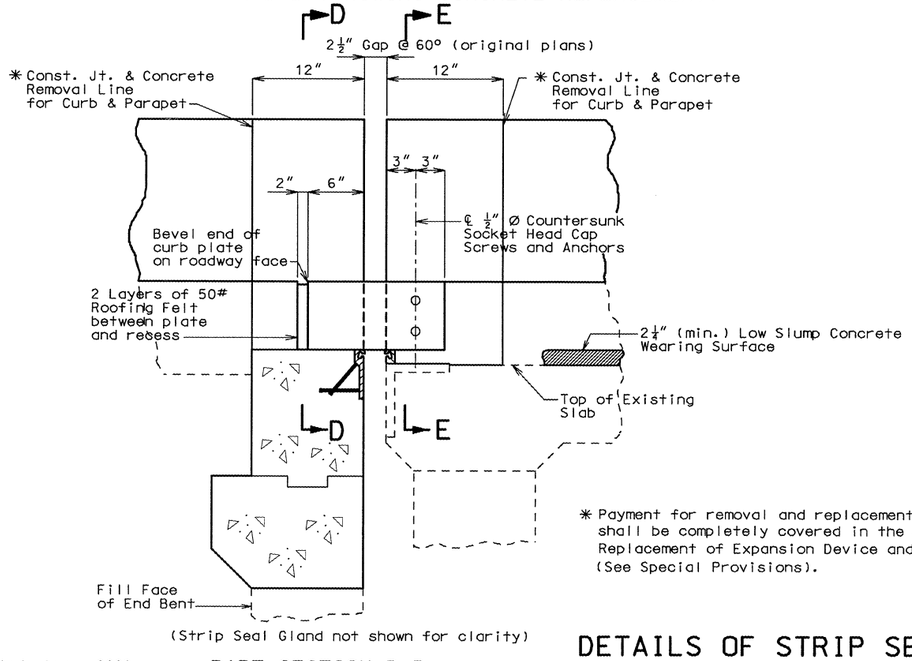

(Strip Seal Gland not shown for clarity)

PART SECTION B-B

✱ Payment for removal and replacement of curb and parapets shall be completely covered in the contract unit price for Replacement of Expansion Device and Adjacent Concrete (See Special Provisions).

FINAL PLANS

I CERTIFY THAT THIS PLAN SHEET ACCURATELY DEPICTS THE CONFIGURATION AND LOCATION OF THE ROADWAY AND ALL ITS APPURTENANT FEATURES, TO THE BEST OF MY KNOWLEDGE, AS I AND MY STAFF HAVE OBSERVED THE CONTRACTOR'S CONSTRUCTION OF THIS PROJECT. I SPECIFICALLY DISCLAIM ANY RESPONSIBILITY FOR THE DESIGN OF THIS PROJECT, EXCEPT AS I AND MY STAFF MAY HAVE MODIFIED OR AUTHORIZED THE MODIFICATION OF THE PROJECT DESIGN DURING ITS CONSTRUCTION; AND I DISCLAIM RESPONSIBILITY FOR THE CONTRACTOR'S ACTUAL CONSTRUCTION OF THE PROJECT, EXCEPT AS I AND MY STAFF MAY HAVE DIRECTED OR ORDERED THAT THE PROJECT BE CONSTRUCTED.

SIGNATURE

4/25/05
DATE

STATE OF MISSOURI
KIRSTEN MUNCK
4-25-05
NUMBER PE-2003001076
PROFESSIONAL ENGINEER

DETAIL OF GLAND

Note: Use single layer gland, no multiple layer glands allowed.

Strip seal gland size = 4"

STRIP SEAL GLAND

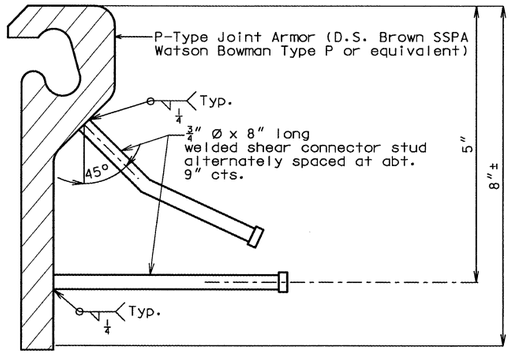

DETAIL OF STEEL EXTRUSION IN BACKWALL OF END BENT

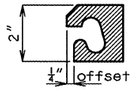

DETAIL OF STEEL EXTRUSION ON EXISTING SLAB

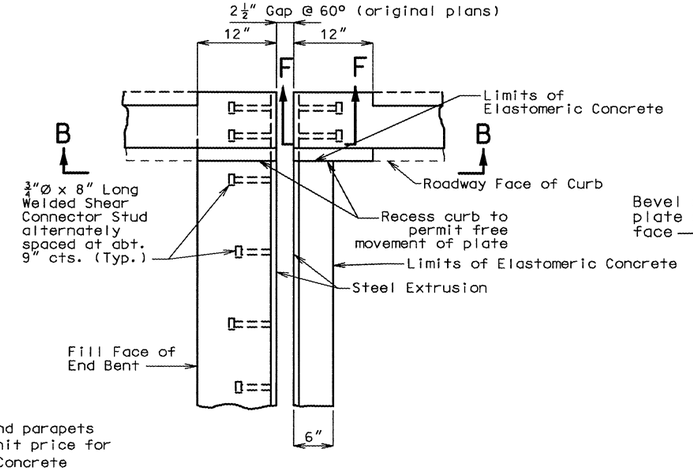

PART PLAN

Note: Shift existing reinforcement in curb to clear studs.

PART SECTION F-F

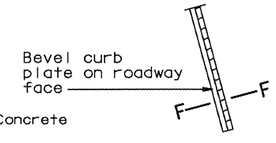

AT END OF BEVELED CURB PLATE

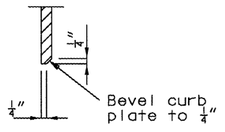

SECTION F-F

NOTE:

The expansion device shall be fabricated and installed in accordance with the recommendations of the manufacturer, and as set forth in the Special Provisions.

The contractor shall verify all dimensions prior to fabrication.

Splices of steel extrusion shall develop full strength.

All steel shall be ASTM A709 Grade 36, except steel extrusions shall be ASTM A709 Grade 50W or Grade 36.

Neoprene Strip Seal shall meet ASTM D-2628.

Anchors for the extrusions or armor shall be approved welded studs (C1010 thru C1020).

All welds shall conform to Section 712 of the Missouri Standard Specifications.

Concrete shall be forced under and around strip seal extrusions and studs. Proper consolidation of the concrete shall be achieved by localized internal vibration.

Plan dimensions are based on installation at 60°F. The gap shall be increased $\frac{1}{16}$" for each 10° fall in temperature and decreased $\frac{1}{16}$" for each 10° rise in temperature from the installation temperature.

Longitudinal reinforcing steel shall be placed so that ends shall not be more than 1"± from vertical leg of extrusion at Expansion Device.

Structural steel for the expansion device shall be coated with a minimum of two coats of inorganic zinc primer (5 mils minimum). Anchors need not be protected from overspray.

Payment for furnishing, coating and placing steel extrusions, miscellaneous structural steel, and neoprene strip seal shall be made under the contract unit price for Strip Seal Expansion Joint System per lin. ft.

Detailed Apr. 2002
Checked July 2002

DETAILS OF STRIP SEAL EXPANSION DEVICE REPLACEMENT AT END BENTS

State	Proj. No.	Sheet No.
MO	J4I0712	B21
021115-407	I-435-1(277)	

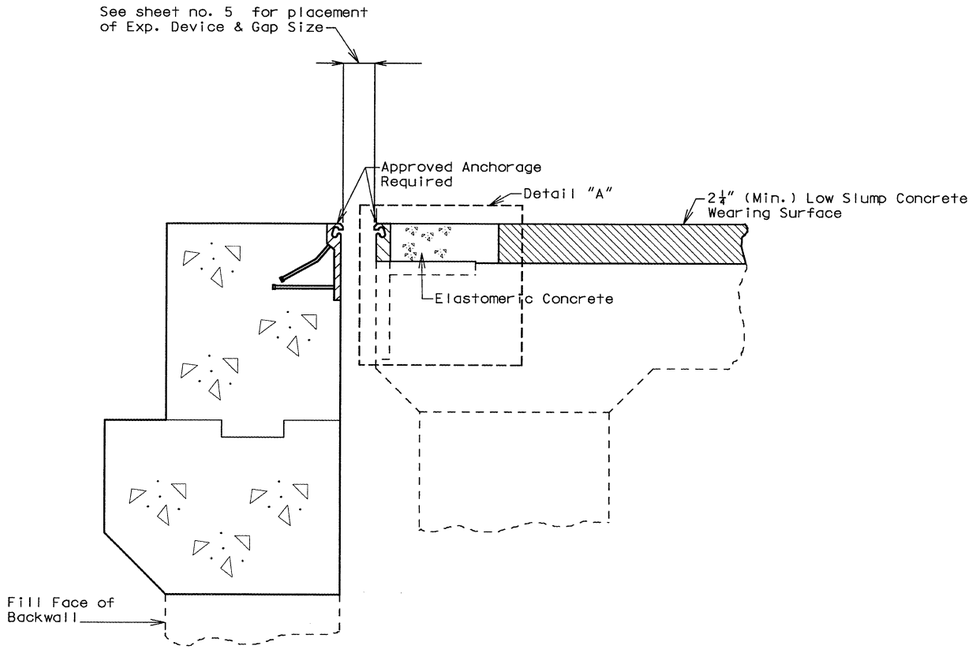

PART SECTION THRU END OF SLAB AT BENT NO. 1

Note: Bent No. 7 similar.

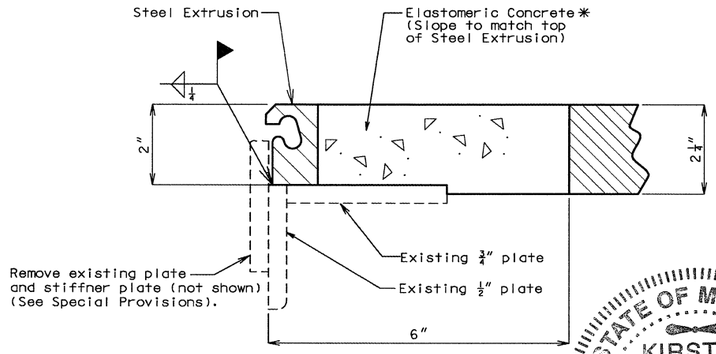

DETAIL "A"

*Submit manufacturer's specifications and installation requirements to the engineer for approval.

FINAL PLANS

I CERTIFY THAT THIS PLAN SHEET ACCURATELY DEPICTS THE CONFIGURATION AND LOCATION OF THE ROADWAY AND ALL ITS APPURTENANT FEATURES, TO THE BEST OF MY KNOWLEDGE, AS I AND MY STAFF HAVE OBSERVED THE CONTRACTOR'S CONSTRUCTION OF THIS PROJECT. I SPECIFICALLY DISCLAIM ANY RESPONSIBILITY FOR THE DESIGN OF THIS PROJECT, EXCEPT AS I AND MY STAFF MAY HAVE MODIFIED OR AUTHORIZED THE MODIFICATION OF THE PROJECT DESIGN DURING ITS CONSTRUCTION; AND I DISCLAIM RESPONSIBILITY FOR THE CONTRACTOR'S ACTUAL CONSTRUCTION OF THE PROJECT, EXCEPT AS I AND MY STAFF MAY HAVE DIRECTED OR ORDERED THAT THE PROJECT BE CONSTRUCTED.

SIGNATURE 4-25-05 DATE

STATE OF MISSOURI
KIRSTEN MUNCK
NUMBER PE-2003001076
PROFESSIONAL ENGINEER

DETAILS OF STRIP SEAL EXPANSION DEVICE AT END BENTS

Detailed Apr. 2002
Checked July 2002

Note: This drawing is not to scale. Follow dimensions.

JACKSON COUNTY A09912 REV.

J:\PROJECTS\J4I0712\MicroStation\Bridge\J4I0712\A09912\a09912_006.dgn 02:26:15 PM 02/25/2005

STATE	PROJ. NO.	SHEET NO.
MO	J4I0712	B22
021115-407	I-435-1(277)	

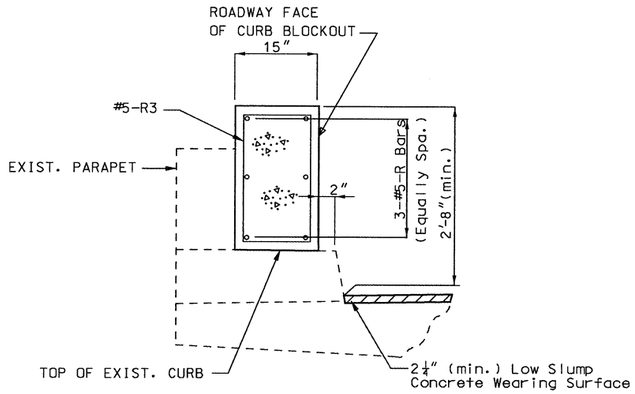

TYPICAL SECTION THRU CURB
BLOCKOUT SHOWING REINFORCEMENT

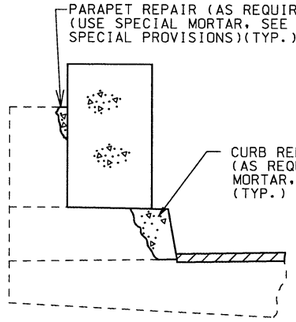

TYPICAL SECTION THRU CURB BLOCKOUT
SHOWING CONCRETE CURB & PARAPET REPAIR

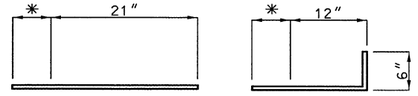

DETAILS OF RESIN ANCHORS AT 15" CURB BLOCKOUTS

* Manufacturer's embedment depth but no greater than 5" in Exist. Parapet and no greater than 7" in Exist. Curb (4" over curb outlets).

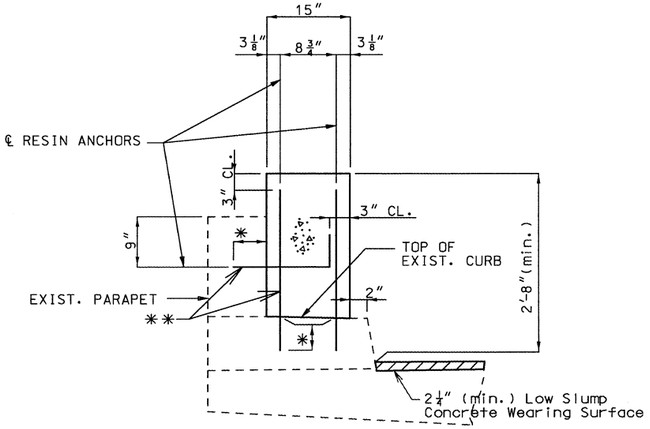

TYPICAL SECTION THRU CURB
BLOCKOUT SHOWING RESIN ANCHORS

FINAL PLANS

I CERTIFY THAT THIS PLAN SHEET ACCURATELY DEPICTS THE CONFIGURATION AND LOCATION OF THE ROADWAY AND ALL ITS APPURTENANT FEATURES, TO THE BEST OF MY KNOWLEDGE, AS I AND MY STAFF HAVE OBSERVED THE CONTRACTOR'S CONSTRUCTION OF THIS PROJECT. I SPECIFICALLY DISCLAIM ANY RESPONSIBILITY FOR THE DESIGN OF THIS PROJECT, EXCEPT AS I AND MY STAFF MAY HAVE MODIFIED OR AUTHORIZED THE MODIFICATION OF THE PROJECT DESIGN DURING ITS CONSTRUCTION; AND I DISCLAIM RESPONSIBILITY FOR THE CONTRACTOR'S ACTUAL CONSTRUCTION OF THE PROJECT, EXCEPT AS I AND MY STAFF MAY HAVE DIRECTED OR ORDERED THAT THE PROJECT BE CONSTRUCTED.

SIGNATURE 4-25-05 DATE

STATE OF MISSOURI
KIRSTEN MUNCK
NUMBER PE-2003001076
PROFESSIONAL ENGINEER

** Resin anchors spaced with alternating pattern at abt. 12" cts.

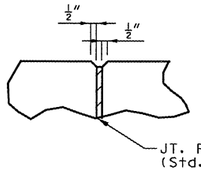

FILLED JOINT DETAIL

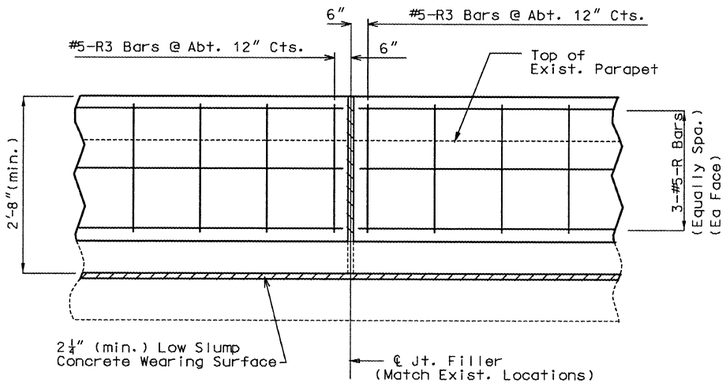

PART ELEVATION OF CURB BLOCKOUT SHOWING REINFORCEMENT

NOTES FOR CURB BLOCKOUT:

Concrete in curb blockout shall be Class B-1.

Measurement of the concrete Curb Blockout is to the nearest linear foot, measured along the inside face of existing parapet from end of wing to end of wing.

All exposed edges of curb blockout shall have ½" radius or ⅜" bevel unless otherwise shown.

Payment for concrete, reinforcing steel, resin anchors and any other work incidental to the curb blockout complete in place shall be included in the contract unit price for Curb Blockout.

Cost of any concrete curb & parapet repair shall be considered completely covered in the contract unit price for Curb Blockout.

Use a minimum lap of 3'-0" for #5 horizontal Curb Blockout bars where necessary.

The cross-sectional area of the Curb Blockout above top of existing curb = 2.59± sq. ft.

Provide or maintain access to existing active conduit systems and junction boxes.

Shift reinforcing steel in field where necessary to clear access openings for existing active junction boxes and conduit systems.

Match locations of existing filled joints.

Longitudinal reinforcing steel shall be field cut to required length between filled joints.

All reinforcing shall be epoxy coated.

Contractor shall prevent damage to existing conduit at light support standards and elsewhere on bridge (See Special Provisions).

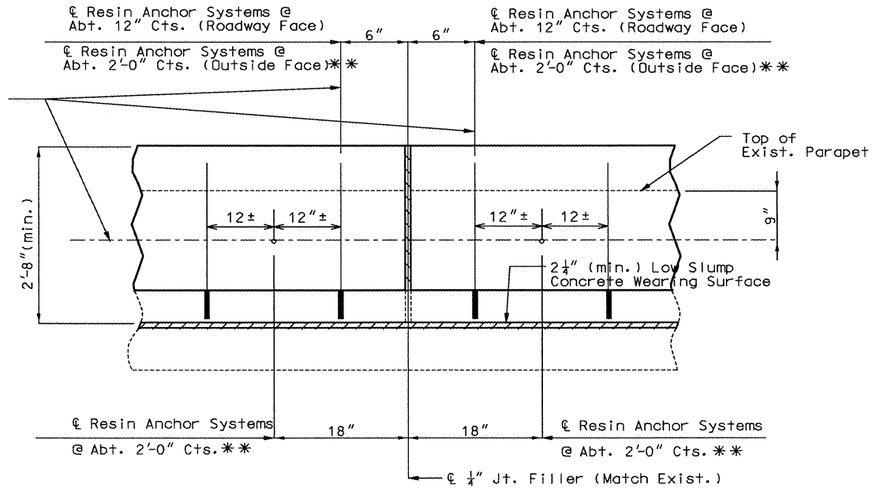

PART SECTION OF CURB BLOCKOUT SHOWING RESIN ANCHORS

DETAILED Mar. 2002
CHECKED July 2002

TYPICAL DETAILS OF CURB BLOCKOUT

NOTE: THIS DRAWING IS NOT TO SCALE. FOLLOW DIMENSIONS.

JACKSON COUNTY

A09912

STATE	PROJ. NO.	SHEET NO.
MO	J4I0712	B23
021115-407	I-435-1(277)	

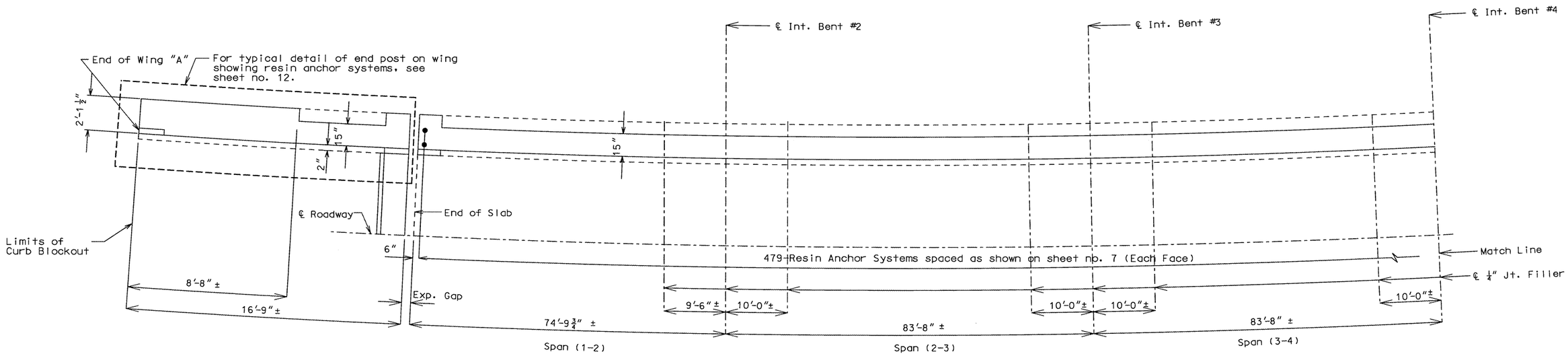

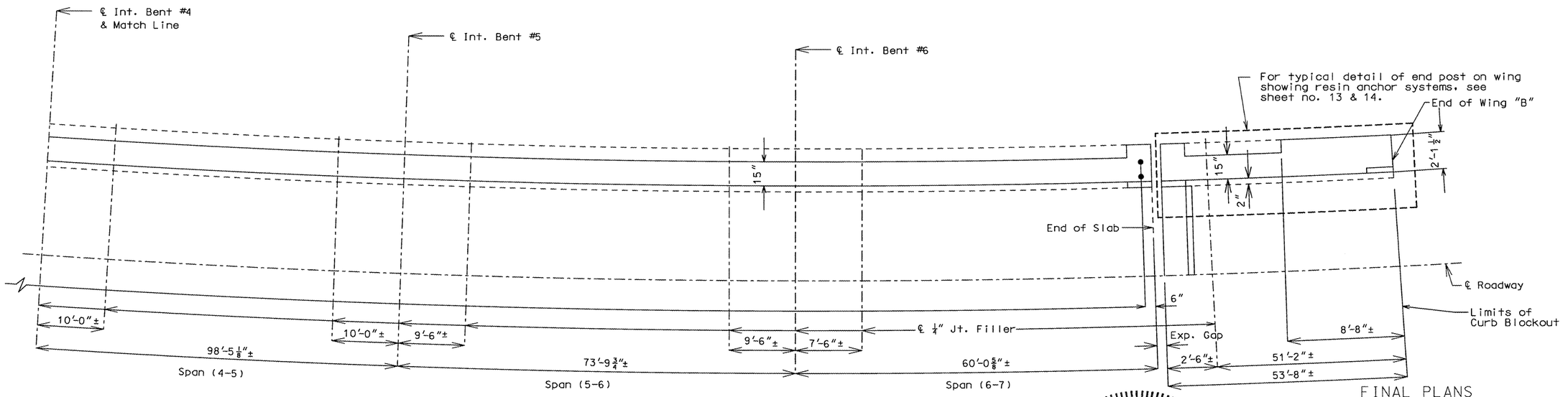

Notes:

Longitudinal dimensions shown are along ℄ parapet.
Match existing curb joints.
For details of resin anchor systems not shown, see sheet no. 7.

PLAN OF LEFT CURB BLOCKOUT SHOWING RESIN ANCHOR SPACING

STATE OF MISSOURI
KIRSTEN MUNCK
NUMBER PE-2003001076
PROFESSIONAL ENGINEER
4-25-05

FINAL PLANS

I CERTIFY THAT THIS PLAN SHEET ACCURATELY DEPICTS THE CONFIGURATION AND LOCATION OF THE ROADWAY AND ALL ITS APPURTENANT FEATURES, TO THE BEST OF MY KNOWLEDGE, AS I AND MY STAFF HAVE OBSERVED THE CONTRACTOR'S CONSTRUCTION OF THIS PROJECT. I SPECIFICALLY DISCLAIM ANY RESPONSIBILITY FOR THE DESIGN OF THIS PROJECT, EXCEPT AS I AND MY STAFF MAY HAVE MODIFIED OR AUTHORIZED THE MODIFICATION OF THE PROJECT DESIGN DURING ITS CONSTRUCTION; AND I DISCLAIM RESPONSIBILITY FOR THE CONTRACTOR'S ACTUAL CONSTRUCTION OF THE PROJECT, EXCEPT AS I AND MY STAFF MAY HAVE DIRECTED OR ORDERED THAT THE PROJECT BE CONSTRUCTED.

SIGNATURE 4-25-05 DATE

STATE	PROJ. NO.	SHEET NO.
MO	J4I0712	B24
021115-407	I-435-1(277)	

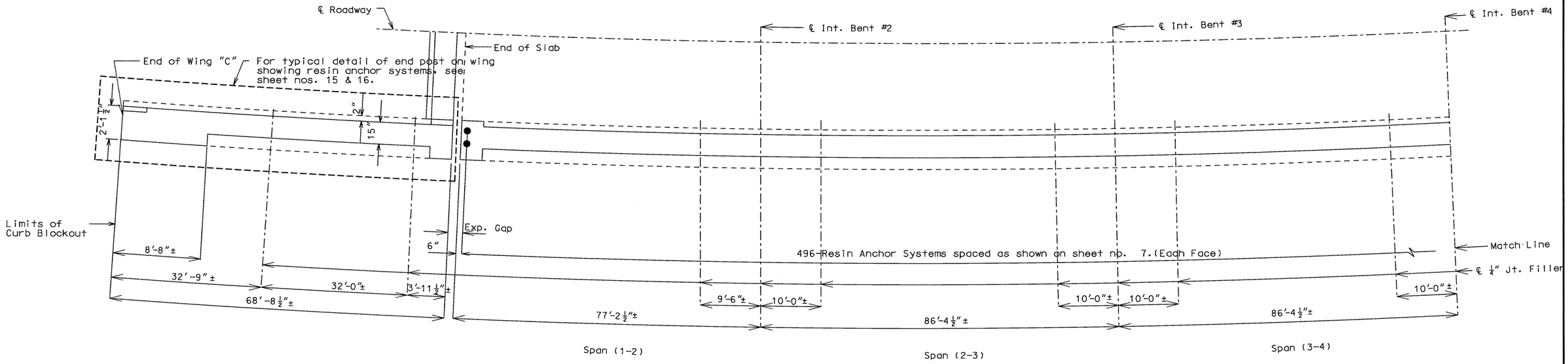

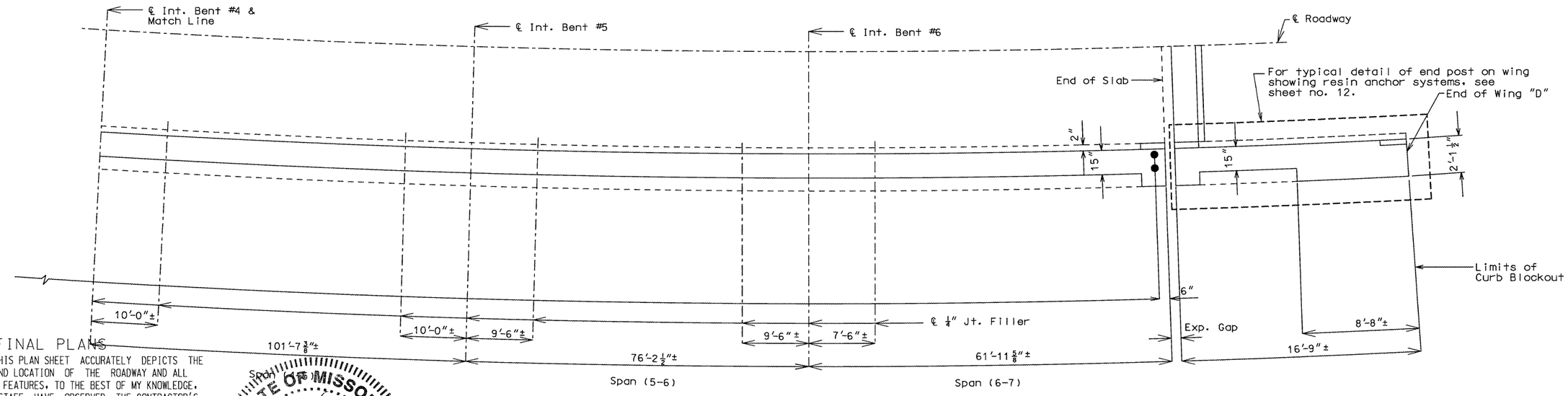

Note: Longitudinal dimensions shown are along parapet.
Match existing curb joints.
For details of resin anchor systems not shown, see sheet no. 7.

PLAN OF RIGHT CURB BLOCKOUT SHOWING RESIN ANCHOR SPACING

FINAL PLANS

I CERTIFY THAT THIS PLAN SHEET ACCURATELY DEPICTS THE CONFIGURATION AND LOCATION OF THE ROADWAY AND ALL ITS APPURTENANT FEATURES, TO THE BEST OF MY KNOWLEDGE, AS I AND MY STAFF HAVE OBSERVED THE CONTRACTOR'S CONSTRUCTION OF THIS PROJECT. I SPECIFICALLY DISCLAIM ANY RESPONSIBILITY FOR THE DESIGN OF THIS PROJECT, EXCEPT AS I AND MY STAFF MAY HAVE MODIFIED OR AUTHORIZED THE MODIFICATION OF THE PROJECT DESIGN DURING ITS CONSTRUCTION; AND I DISCLAIM RESPONSIBILITY FOR THE CONTRACTOR'S ACTUAL CONSTRUCTION OF THE PROJECT, EXCEPT AS I AND MY STAFF MAY HAVE DIRECTED OR ORDERED THAT THE PROJECT BE CONSTRUCTED.

SIGNATURE

4-25-05
DATE

STATE OF MISSOURI
KIRSTEN MUNCK
4-25-05
NUMBER PE-2003001076
PROFESSIONAL ENGINEER

DETAILED MAR. 2002
CHECKED July 2002

NOTE: THIS DRAWING IS NOT TO SCALE. FOLLOW DIMENSIONS.

STATE	PROJ. NO.	SHEET NO.
MO	J4I0712	B25
021115-407	I-435-1(277)	

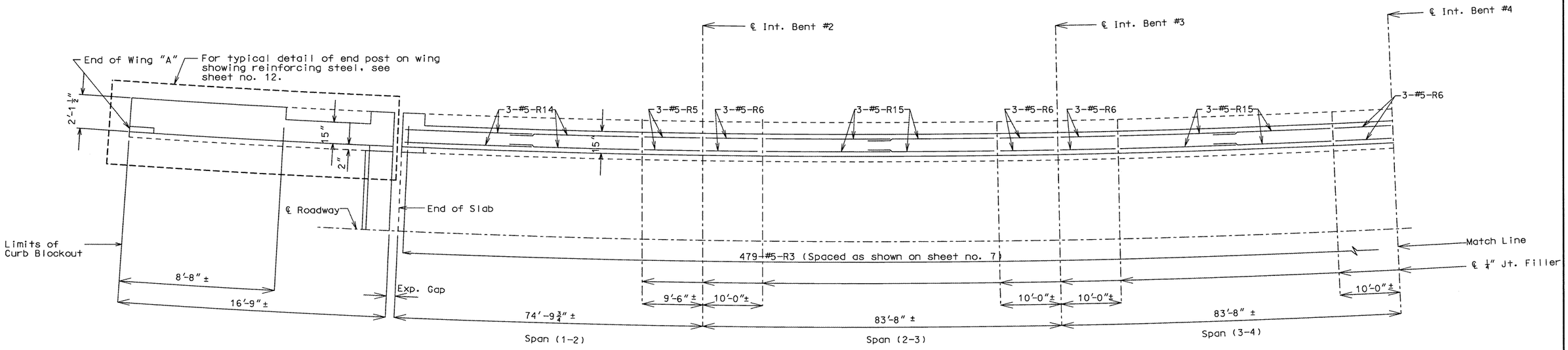

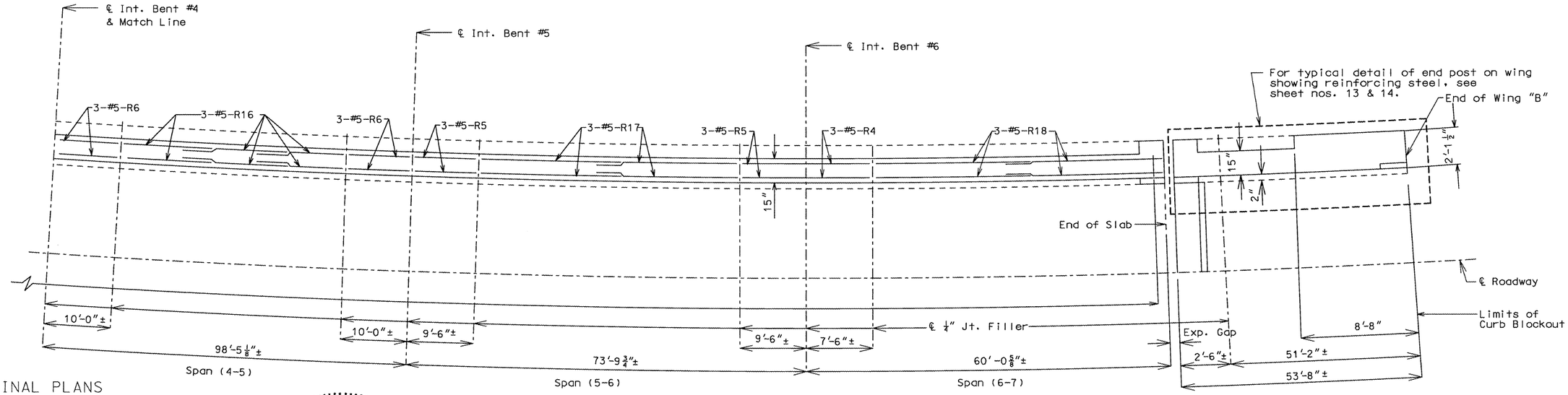

FINAL PLANS

I CERTIFY THAT THIS PLAN SHEET ACCURATELY DEPICTS THE CONFIGURATION AND LOCATION OF THE ROADWAY AND ALL ITS APPURTENANT FEATURES, TO THE BEST OF MY KNOWLEDGE, AS I AND MY STAFF HAVE OBSERVED THE CONTRACTOR'S CONSTRUCTION OF THIS PROJECT. I SPECIFICALLY DISCLAIM ANY RESPONSIBILITY FOR THE DESIGN OF THIS PROJECT, EXCEPT AS I AND MY STAFF MAY HAVE MODIFIED OR AUTHORIZED THE MODIFICATION OF THE PROJECT DESIGN DURING ITS CONSTRUCTION; AND I DISCLAIM RESPONSIBILITY FOR THE CONTRACTOR'S ACTUAL CONSTRUCTION OF THE PROJECT, EXCEPT AS I AND MY STAFF MAY HAVE DIRECTED OR ORDERED THAT THE PROJECT BE CONSTRUCTED.

SIGNATURE 4-25-05 DATE

STATE OF MISSOURI
KIRSTEN MUNCK
NUMBER PE-2003001076
4-25-05
PROFESSIONAL ENGINEER

Note: Longitudinal dimensions shown are dimensions taken along parapet.
Match existing curb joints.
For details of reinforcing steel not shown, see sheet no. 7.
Use a minimum lap of 3'-0" for #5-R horizontal curb blockout bars.

PLAN OF LEFT CURB BLOCKOUT SHOWING REINFORCING STEEL

DETAILED MAR. 2002
CHECKED July 2002

NOTE: THIS DRAWING IS NOT TO SCALE. FOLLOW DIMENSIONS.

JACKSON COUNTY A09912

STATE	PROJ. NO.	SHEET NO.
MO	J4I0712	B26
021115-407	I-435-1(277)	

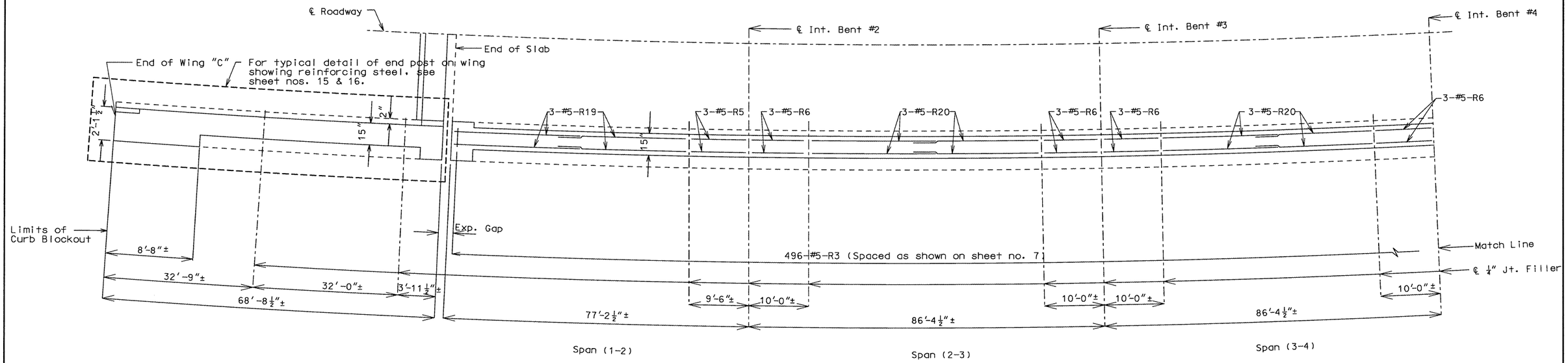

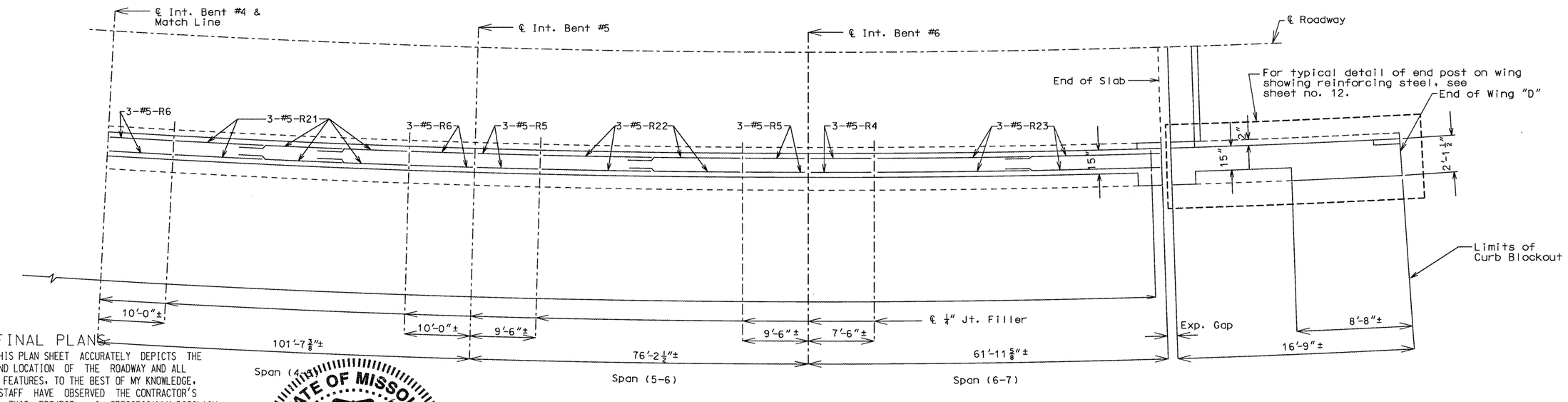

Note: Longitudinal dimensions shown are dimensions taken along ℄ parapet.
Match existing curb joints.
For details of reinforcing steel not shown, see sheet no. 7.
Use a minimum lap of 3'-0" for #5-R horizontal curb blockout bars.

PLAN OF RIGHT CURB BLOCKOUT SHOWING REINFORCING STEEL

FINAL PLANS

I CERTIFY THAT THIS PLAN SHEET ACCURATELY DEPICTS THE CONFIGURATION AND LOCATION OF THE ROADWAY AND ALL ITS APPURTENANT FEATURES, TO THE BEST OF MY KNOWLEDGE, AS I AND MY STAFF HAVE OBSERVED THE CONTRACTOR'S CONSTRUCTION OF THIS PROJECT. I SPECIFICALLY DISCLAIM ANY RESPONSIBILITY FOR THE DESIGN OF THIS PROJECT, EXCEPT AS I AND MY STAFF MAY HAVE MODIFIED OR AUTHORIZED THE MODIFICATION OF THE PROJECT DESIGN DURING ITS CONSTRUCTION; AND I DISCLAIM RESPONSIBILITY FOR THE CONTRACTOR'S ACTUAL CONSTRUCTION OF THE PROJECT, EXCEPT AS I AND MY STAFF MAY HAVE DIRECTED OR ORDERED THAT THE PROJECT BE CONSTRUCTED.

Kirsten Munck 4-25-05
SIGNATURE DATE

STATE OF MISSOURI
KIRSTEN MUNCK
NUMBER PE-2003001076
PROFESSIONAL ENGINEER
4-25-05

DETAILED MAR. 2002
CHECKED July 2002

NOTE: THIS DRAWING IS NOT TO SCALE. FOLLOW DIMENSIONS.

STATE	PROJ. NO.	SHEET NO.
MO	J4I0712	B27
	021115-407	I-435-1(277)

FINAL PLANS

I CERTIFY THAT THIS PLAN SHEET ACCURATELY DEPICTS THE CONFIGURATION AND LOCATION OF THE ROADWAY AND ALL ITS APPURTENANT FEATURES. TO THE BEST OF MY KNOWLEDGE, AS I AND MY STAFF HAVE OBSERVED THE CONTRACTOR'S CONSTRUCTION OF THIS PROJECT. I SPECIFICALLY DISCLAIM ANY RESPONSIBILITY FOR THE DESIGN OF THIS PROJECT, EXCEPT AS I AND MY STAFF MAY HAVE MODIFIED OR AUTHORIZED THE MODIFICATION OF THE PROJECT DESIGN DURING ITS CONSTRUCTION; AND I DISCLAIM RESPONSIBILITY FOR THE CONTRACTOR'S ACTUAL CONSTRUCTION OF THE PROJECT, EXCEPT AS I AND MY STAFF MAY HAVE DIRECTED OR ORDERED THAT THE PROJECT BE CONSTRUCTED.

SIGNATURE _____ DATE 4/25/05

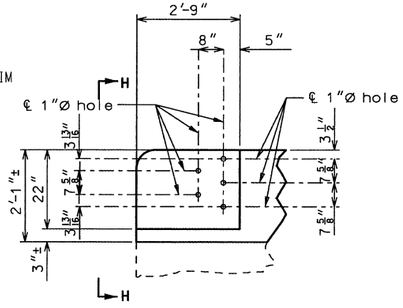

PART ELEVATION

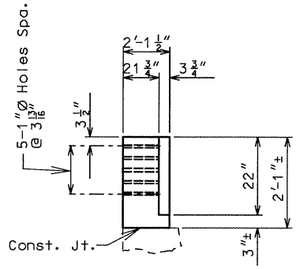

PART ELEVATION H-H

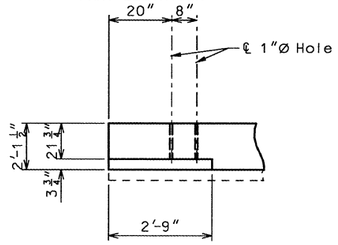

PART PLAN

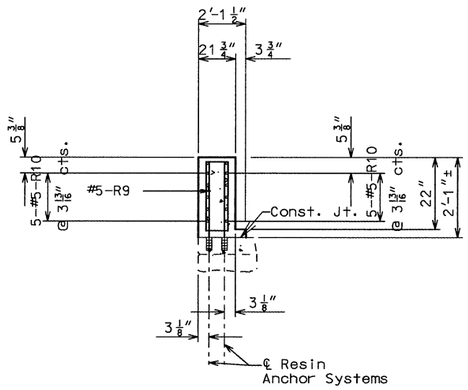

SECTION E-E

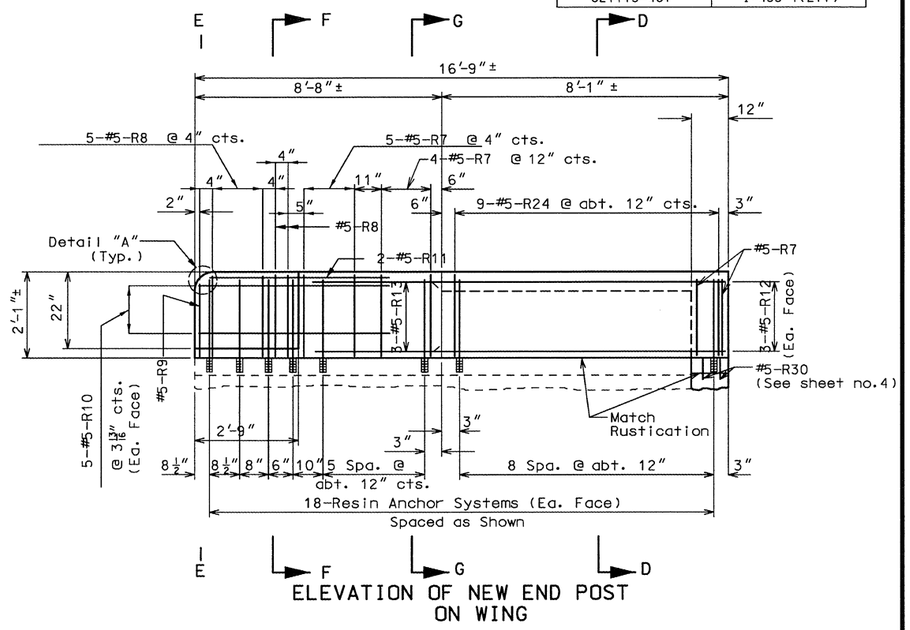

ELEVATION OF NEW END POST ON WING

DETAILS OF GUARD RAIL ATTACHMENT

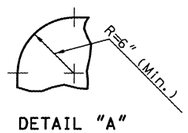

DETAIL "A"

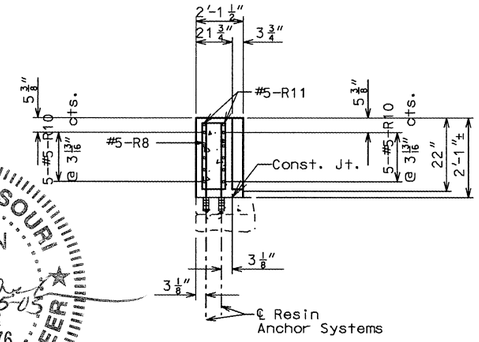

SECTION F-F

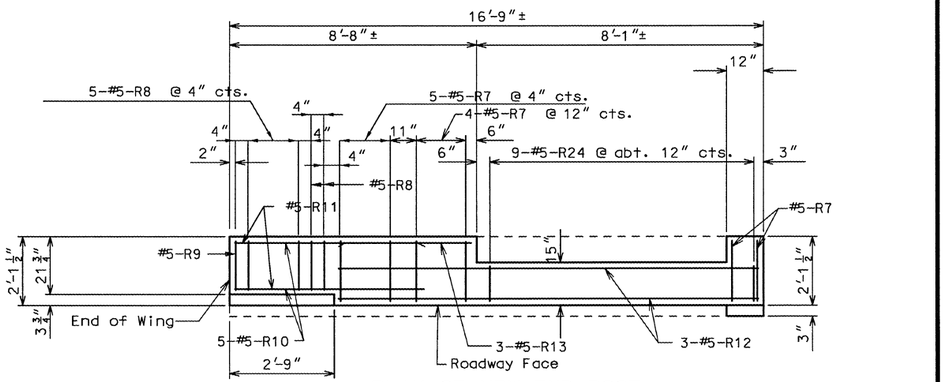

PLAN OF NEW END POST ON WING

Note: Resin anchors not shown in plan for clarity.

✱ As shown on sheet no.7 (Typ.)

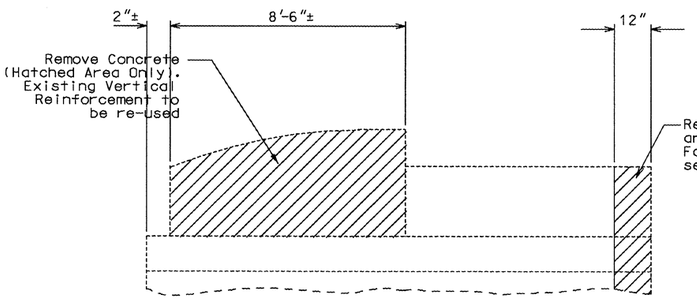

ELEVATION OF EXISTING END POST SHOWING CONCRETE REMOVAL

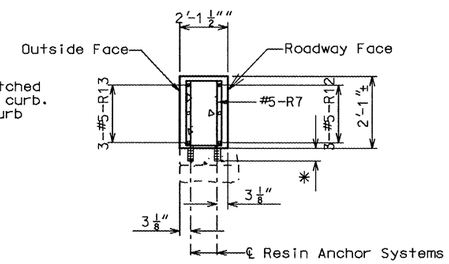

SECTION G-G

①Use alternating resin anchors in existing parapet & curb as shown on sheet no. 7.

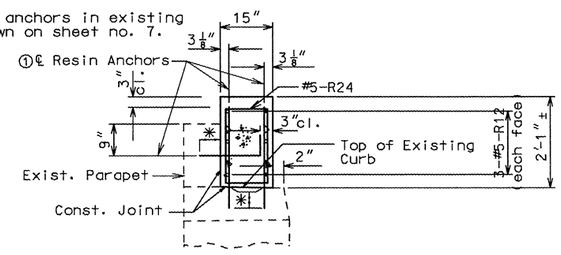

SECTION D-D

Note: For correct orientation, see sheet nos. 8 & 9.

TYPICAL DETAILS OF END POST BLOCKOUT ON WING "A" & "D"

DETAILED MAR. 2002
CHECKED JULY 2002

NOTE: THIS DRAWING IS NOT TO SCALE. FOLLOW DIMENSIONS.

SHEET NO. 12 OF 18

JACKSON COUNTY

A09912

STATE	PROJ. NO.	SHEET NO.
MO	J4I0712	B28
021115-407	I-435-1(277)	

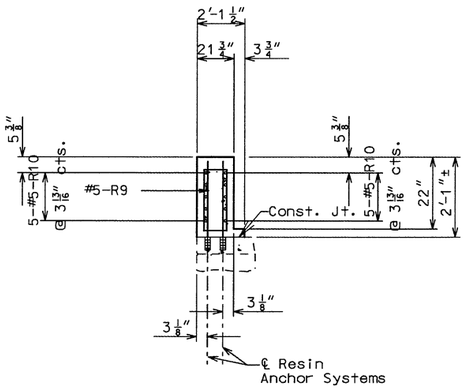

SECTION E-E

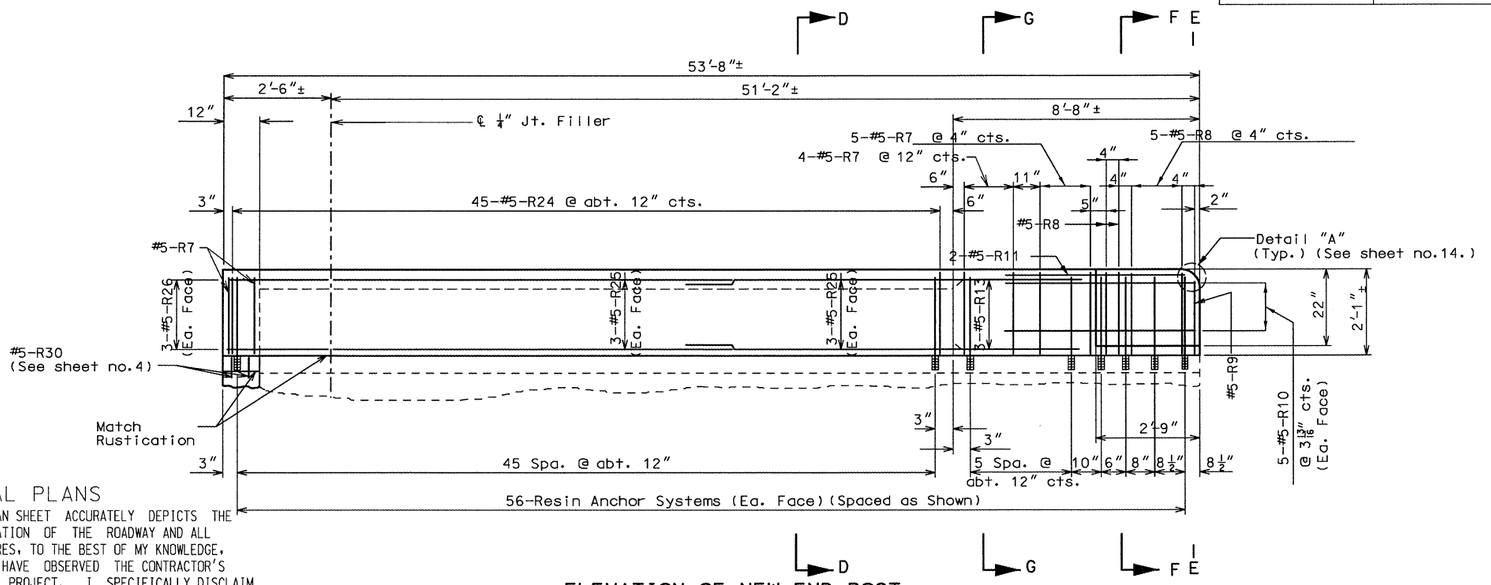

ELEVATION OF NEW END POST ON WING

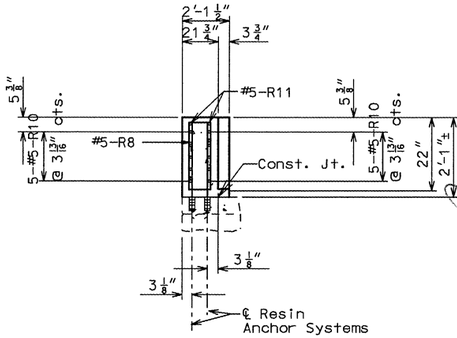

SECTION F-F

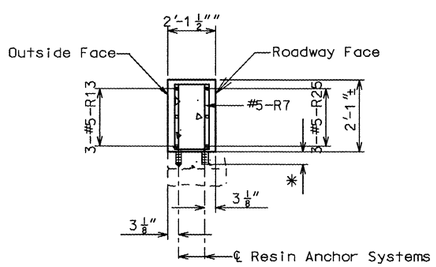

SECTION G-G

FINAL PLANS

I CERTIFY THAT THIS PLAN SHEET ACCURATELY DEPICTS THE CONFIGURATION AND LOCATION OF THE ROADWAY AND ALL ITS APPURTENANT FEATURES, TO THE BEST OF MY KNOWLEDGE, AS I AND MY STAFF HAVE OBSERVED THE CONTRACTOR'S CONSTRUCTION OF THIS PROJECT. I SPECIFICALLY DISCLAIM ANY RESPONSIBILITY FOR THE DESIGN OF THIS PROJECT, EXCEPT AS I AND MY STAFF MAY HAVE MODIFIED OR AUTHORIZED THE MODIFICATION OF THE PROJECT DESIGN DURING ITS CONSTRUCTION; AND I DISCLAIM RESPONSIBILITY FOR THE CONTRACTOR'S ACTUAL CONSTRUCTION OF THE PROJECT, EXCEPT AS I AND MY STAFF MAY HAVE DIRECTED OR ORDERED THAT THE PROJECT BE CONSTRUCTED.

SIGNATURE 4-25-05 DATE

STATE OF MISSOURI
KIRSTEN MUNCK
4-25-05
NUMBER PE-2003001076
PROFESSIONAL ENGINEER

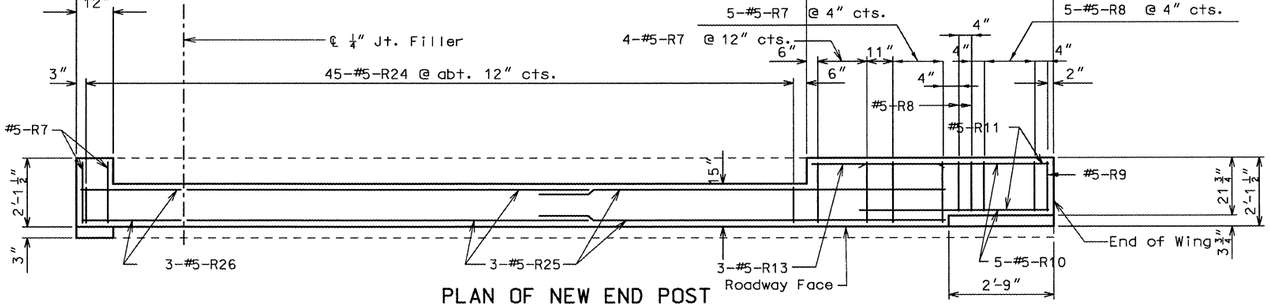

PLAN OF NEW END POST ON WING

Note: Resin anchors not shown in plan for clarity.

* As shown on sheet no. 7 (Typ.)

Notes:
For correct orientation, see sheet no. 8
For details of end post not shown see sheet no.14.
Use a minimum lap of 3'-0" for #5-R horizontal curb blockout bars.

①Use alternating resin anchors in existing parapet & curb as shown on sheet no. 7.

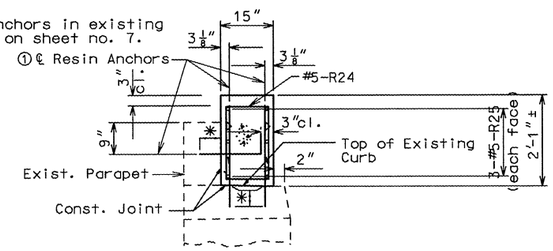

SECTION D-D

TYPICAL DETAILS OF END POST BLOCKOUT ON WING "B"

DETAILED MAR. 2002
CHECKED July 2002

NOTE: THIS DRAWING IS NOT TO SCALE. FOLLOW DIMENSIONS.

SHEET NO. 13 OF 18

JACKSON COUNTY

A09912

STATE	PROJ. NO.	SHEET NO.
MO	J4I0712	B29
021115-407	I-435-1(277)	

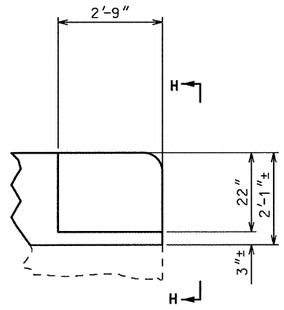

PART ELEVATION

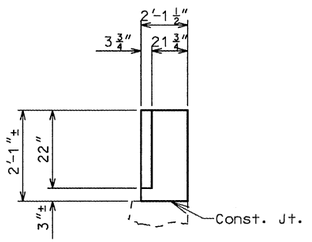

PART ELEVATION H-H

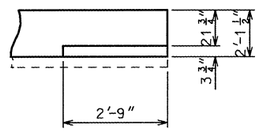

PART PLAN

DETAILS OF GUARD RAIL ATTACHMENT

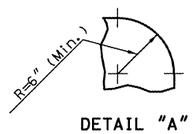

DETAIL "A"

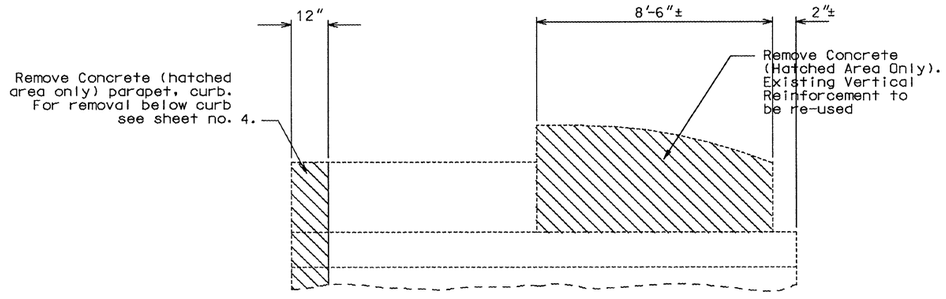

ELEVATION OF EXISTING END POST SHOWING CONCRETE REMOVAL

STATE OF MISSOURI
KIRSTEN MUNCK
NUMBER PE-2003001076
PROFESSIONAL ENGINEER

FINAL PLANS

I CERTIFY THAT THIS PLAN SHEET ACCURATELY DEPICTS THE CONFIGURATION AND LOCATION OF THE ROADWAY AND ALL ITS APPURTENANT FEATURES, TO THE BEST OF MY KNOWLEDGE. AS I AND MY STAFF HAVE OBSERVED THE CONTRACTOR'S CONSTRUCTION OF THIS PROJECT. I SPECIFICALLY DISCLAIM ANY RESPONSIBILITY FOR THE DESIGN OF THIS PROJECT, EXCEPT AS I AND MY STAFF MAY HAVE MODIFIED OR AUTHORIZED THE MODIFICATION OF THE PROJECT DESIGN DURING ITS CONSTRUCTION; AND I DISCLAIM RESPONSIBILITY FOR THE CONTRACTOR'S ACTUAL CONSTRUCTION OF THE PROJECT, EXCEPT AS I AND MY STAFF MAY HAVE DIRECTED OR ORDERED THAT THE PROJECT BE CONSTRUCTED.

SIGNATURE 4-25-05 DATE

TYPICAL DETAILS OF END POST BLOCKOUT ON WING "B"

DETAILED MAR. 2002
CHECKED July 2002

NOTE: THIS DRAWING IS NOT TO SCALE. FOLLOW DIMENSIONS.

JACKSON COUNTY A09912

STATE	PROJ. NO.	SHEET NO.
MO	J4I0712	B30
021115-407	I-435-1(277)	

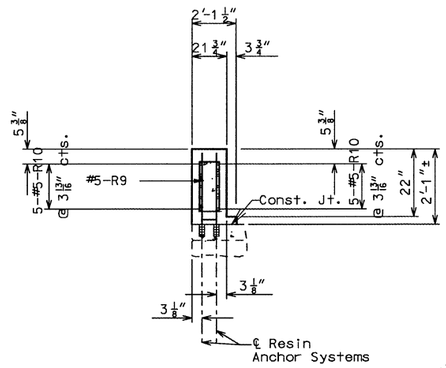

SECTION E-E

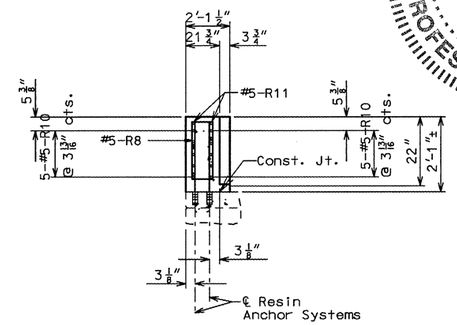

SECTION F-F

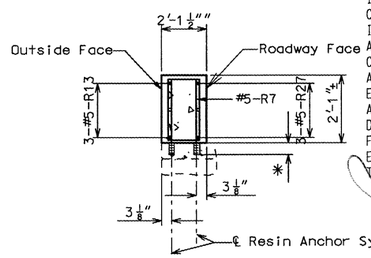

SECTION G-G

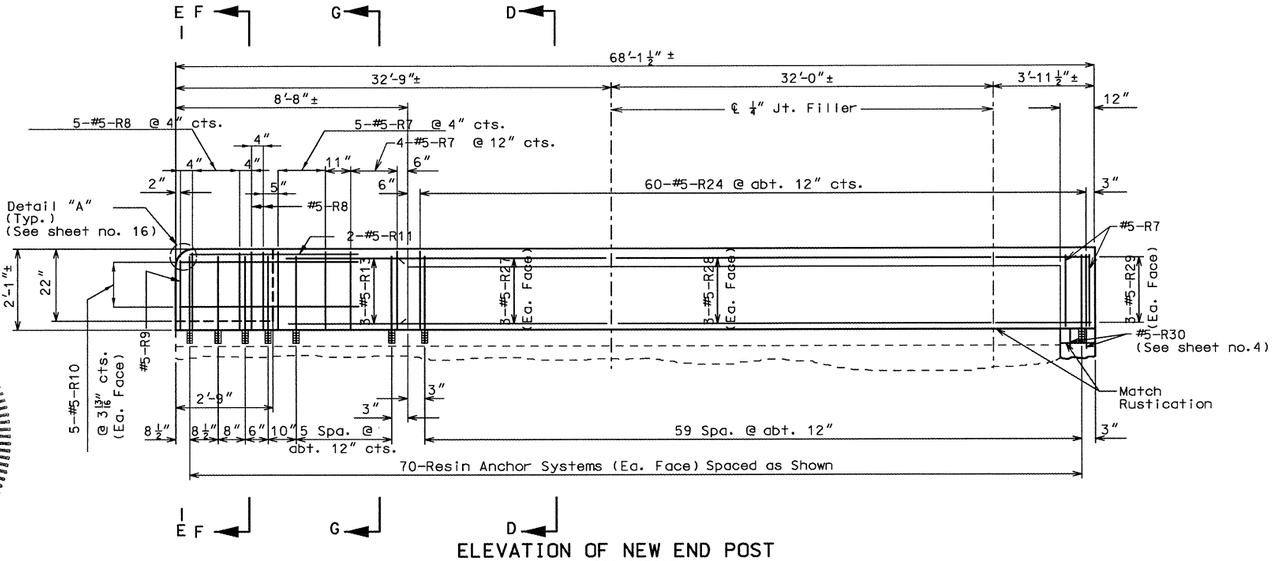

ELEVATION OF NEW END POST ON WING

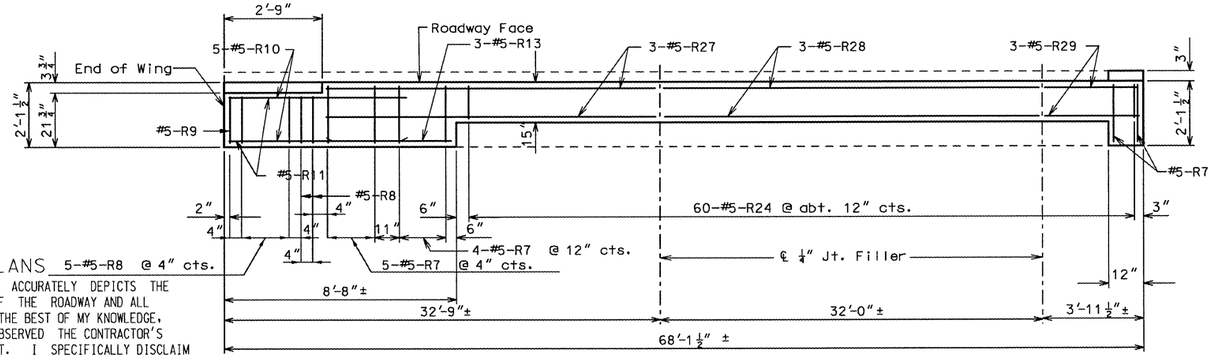

PLAN OF NEW END POST ON WING

Note: Resin anchors not shown in plan for clarity.

✱ As shown on sheet no. 7

FINAL PLANS

I CERTIFY THAT THIS PLAN SHEET ACCURATELY DEPICTS THE CONFIGURATION AND LOCATION OF THE ROADWAY AND ALL ITS APPURTENANT FEATURES, TO THE BEST OF MY KNOWLEDGE, AS I AND MY STAFF HAVE OBSERVED THE CONTRACTOR'S CONSTRUCTION OF THIS PROJECT. I SPECIFICALLY DISCLAIM ANY RESPONSIBILITY FOR THE DESIGN OF THIS PROJECT, EXCEPT AS I AND MY STAFF MAY HAVE MODIFIED OR AUTHORIZED THE MODIFICATION OF THE PROJECT DESIGN DURING ITS CONSTRUCTION; AND I DISCLAIM RESPONSIBILITY FOR THE CONTRACTOR'S ACTUAL CONSTRUCTION OF THE PROJECT, EXCEPT AS I AND MY STAFF MAY HAVE DIRECTED OR ORDERED THAT THE PROJECT BE CONSTRUCTED.

SIGNATURE 4-25-05 DATE

STATE OF MISSOURI
KIRSTEN MUNCK
4-25-05
NUMBER PE-2003001076
PROFESSIONAL ENGINEER

①Use alternating resin anchors in existing parapet & curb as shown on sheet no. 7.

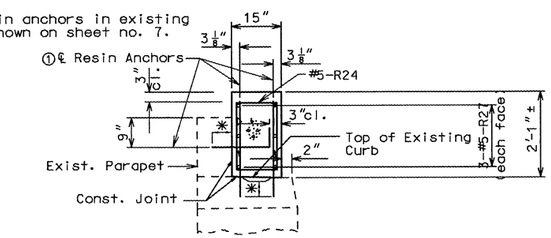

SECTION D-D

Note: For correct orientation, see sheet no. 9.
For details of end post not shown, see sheet no. 16.

TYPICAL DETAILS OF END POST BLOCKOUT ON WING "C"

DETAILED MAR. 2002
CHECKED July 2002

NOTE: THIS DRAWING IS NOT TO SCALE. FOLLOW DIMENSIONS.

SHEET NO. 15 OF 18

JACKSON COUNTY

A09912

STATE	PROJ. NO.	SHEET NO.
MO	J4I0712	B31
021115-407	I-435-1(277)	

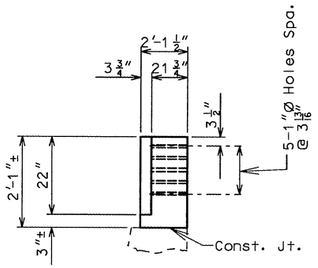

PART ELEVATION H-H

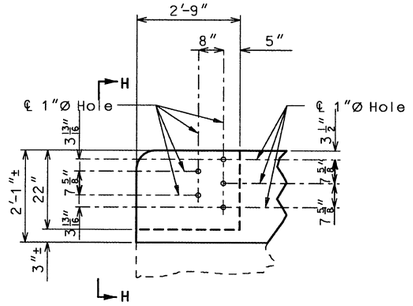

PART ELEVATION

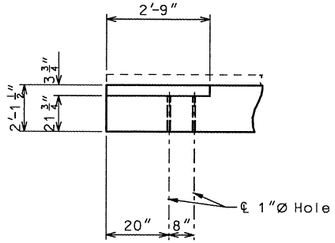

PART PLAN

DETAILS OF GUARD RAIL ATTACHMENT

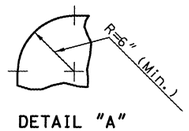

DETAIL "A"

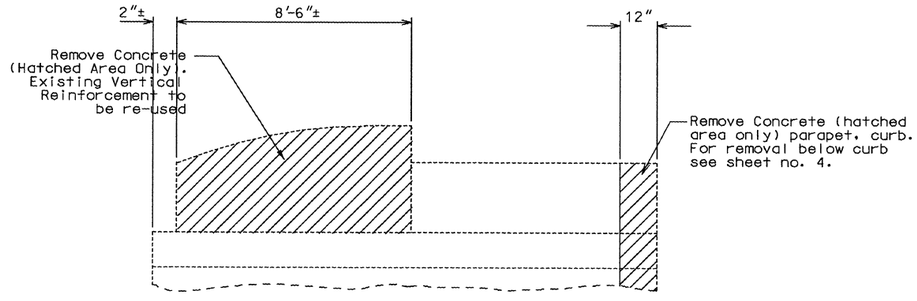

ELEVATION OF EXISTING END POST SHOWING CONCRETE REMOVAL

Notes:

For correct orientation, see sheet no. 9.
For details of end post not shown, see sheet no.15.

STATE OF MISSOURI
KIRSTEN MUNCK
NUMBER PE-2003001076
PROFESSIONAL ENGINEER

FINAL PLANS

I CERTIFY THAT THIS PLAN SHEET ACCURATELY DEPICTS THE CONFIGURATION AND LOCATION OF THE ROADWAY AND ALL ITS APPURTENANT FEATURES, TO THE BEST OF MY KNOWLEDGE, AS I AND MY STAFF HAVE OBSERVED THE CONTRACTOR'S CONSTRUCTION OF THIS PROJECT. I SPECIFICALLY DISCLAIM ANY RESPONSIBILITY FOR THE DESIGN OF THIS PROJECT, EXCEPT AS I AND MY STAFF MAY HAVE MODIFIED OR AUTHORIZED THE MODIFICATION OF THE PROJECT DESIGN DURING ITS CONSTRUCTION; AND I DISCLAIM RESPONSIBILITY FOR THE CONTRACTOR'S ACTUAL CONSTRUCTION OF THE PROJECT, EXCEPT AS I AND MY STAFF MAY HAVE DIRECTED OR ORDERED THAT THE PROJECT BE CONSTRUCTED.

SIGNATURE 4-25-05 DATE

DETAILED MAR. 2002
CHECKED July 2002

TYPICAL DETAILS OF END POST BLOCKOUT ON WING "C"

NOTE: THIS DRAWING IS NOT TO SCALE. FOLLOW DIMENSIONS.

JACKSON COUNTY

A09912

State	Proj. No.	Sheet No.
MO	J410712	B32
021115-407	I-435-1(277)	

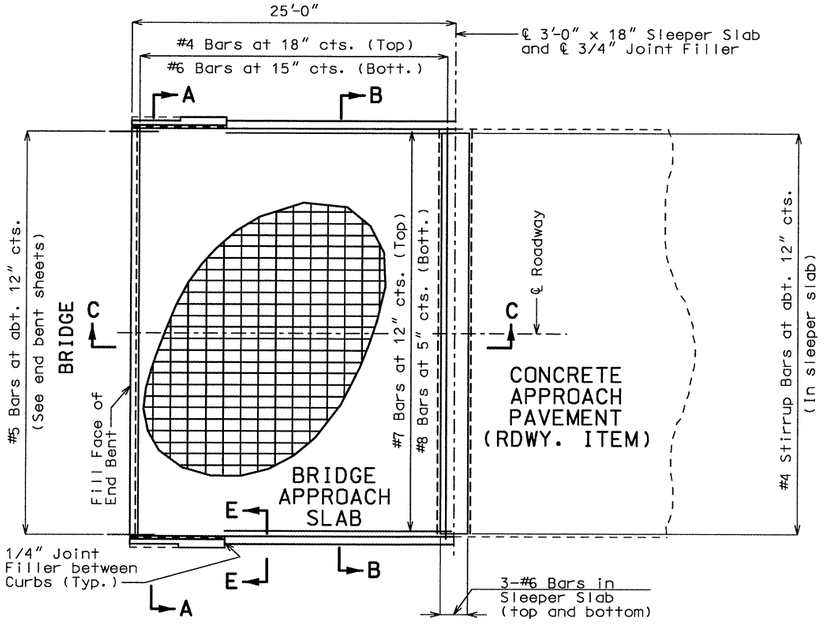

PART PLAN SHOWING REINFORCEMENT

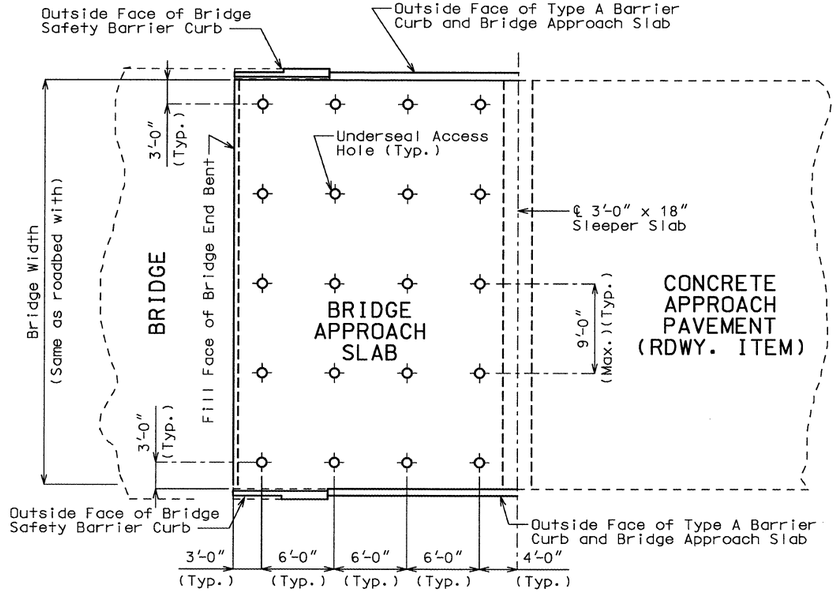

PART PLAN
(SHOWING TYPICAL UNDERSEAL ACCESS HOLE LOCATIONS)

GENERAL NOTES:

All concrete for the bridge approach slab and sleeper slab shall be in accordance with Section 503 (f'c = 4,000 psi) of the Missouri Standard Specifications.

All joint filler shall meet the requirements of Section 1057.2.5 of the Missouri Standard Specifications, except as noted.

The reinforcing steel in the bridge approach slab and the sleeper slab shall be epoxy coated Grade 60 with Fy = 60,000 psi.

Minimum clearance to reinforcing steel shall be 1-1/2", unless otherwise shown.

The reinforcing steel in the bridge approach slab and the sleeper slab shall be continuous. The transverse reinforcing steel may be made continuous by lap splicing the #4 & #6 bars 18" and 26" respectively.

Mechanical bar splices will be permitted and shall develop at least 125 percent of the specified yield strength of the reinforcing bars being spliced. The contractor shall furnish the Engineer the manufacturer's certification that this requirement is met and is required to follow the manufacturer's recommendation for installation.

Mechanical bar splices shall be epoxy coated in accordance with Section 710 of the Missouri Standard Specifications.

Hooks and bends shall be in accordance with the CRSI Manual of Standard Practice for Detailing Reinforced Concrete Structures. Stirrup and Tie Dimensions.

The contractor shall pour and satisfactorily finish the bridge slab before pouring the bridge approach slabs.

Longitudinal construction joints in approach slab and sleeper slab shall be aligned with longitudinal construction joints in bridge slab.

Payment for furnishing all materials, labor and excavation necessary to construct the approach slab, including the timber header, sleeper slab, underdrain, Type 5 aggregate base and all other appurtenances and incidental work as shown on this sheet, complete in place, shall be considered as completely covered under the contract unit price for Bridge Approach Slab (Bridge), per sq. yd.

For Concrete Approach Pavement details, see roadway plans.

See Missouri Standard Plans Drawing 609.00 for details of Type A Barrier Curb.

When a lap splice is required for the use of a mechanical bar splice, the minimum lap length shall be 40" for transverse approach slab bar splices.

At the contractor's option, Grade 40 reinforcement may be substituted for the Grade 60 #5 dowel bars connecting the bridge approach slab to the bridge abutment. No additional payment will be made for this substitution.

When Grade 40 reinforcement is substituted for the Grade 60 #5 dowel bars connecting the bridge approach slab to the bridge abutment, the reinforcement may be bent up to 90 degrees with a 2" minimum radius near the abutment to allow compaction of the backfill material near the abutment. Damage to epoxy coating shall be repaired according to Section 710.3.3 of the Missouri Standard Specifications.

Drain pipe may be either 6" diameter corrugated metallic-coated pipe underdrain, 4" diameter corrugated polyvinyl chloride (PVC) drain pipe, or 4" diameter corrugated polyethylene (PE) drain pipe.

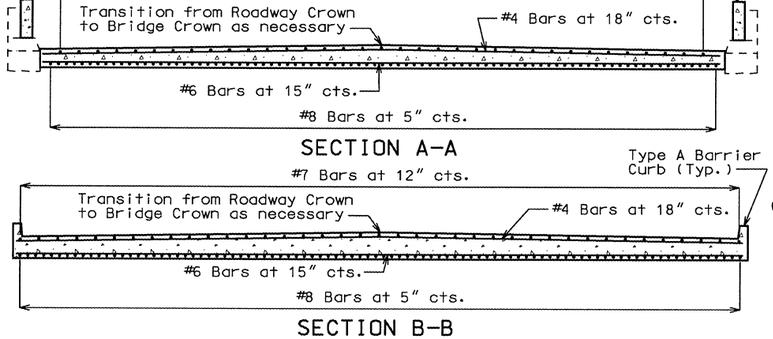

SECTION A-A

SECTION B-B

Note: With the approval of the Engineer, the contractor may crown the bottom of the approach slab to match the crown of the roadway surface.

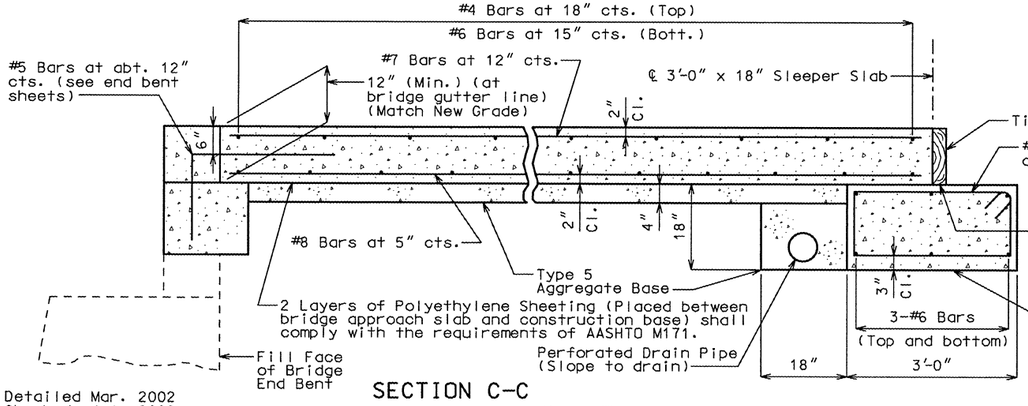

SECTION C-C

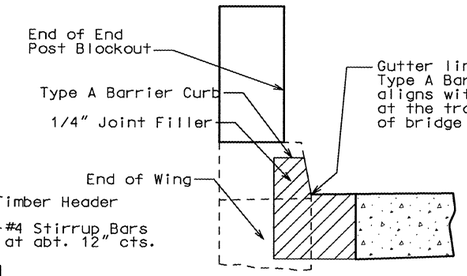

SECTION E-E
(BETWEEN CURBS)

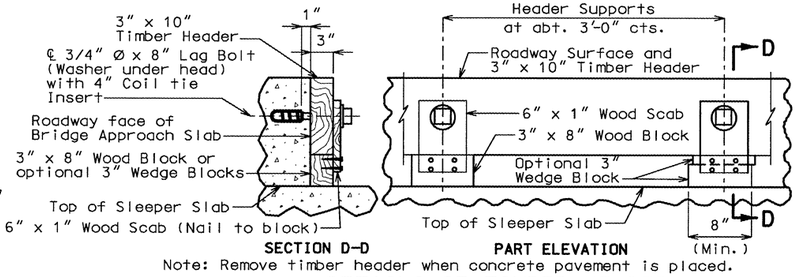

SECTION D-D

PART ELEVATION

Note: Remove timber header when concrete pavement is placed.

DETAILS OF TIMBER HEADER

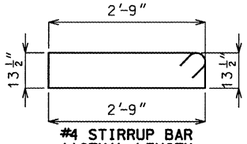

#4 STIRRUP BAR
(ACTUAL LENGTH = 8'-3")

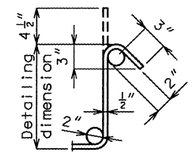

TYPICAL 135° STIRRUP HOOK DIMENSIONS BENDING DIAGRAM

Note:
Nominal lengths are based on out to out dimensions shown in bending diagram and are listed for fabricators use (nearest inch).

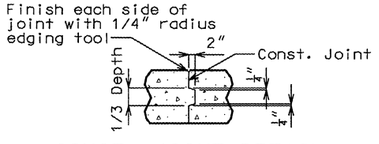

CONST. JOINT DETAIL
(IF REQUIRED)

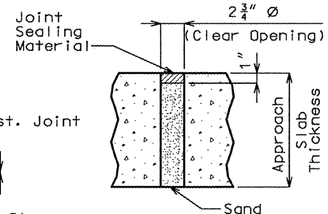

TYPICAL UNDERSEAL ACCESS HOLE DETAIL

I CERTIFY THAT THIS PLAN WAS PREPARED BY ME OR UNDER MY IMMEDIATELY DEPICTS CONFIGURATION OF THE PROPOSED ROADWAY AND ALL CONSTRUCTED BY THE CONTRACTOR FOR THE DESIGN OF THIS PROJECT. I KNOWLEDGE AND AFF ITS APPURTENANCES AS IT AND ITS APPURTENANCES AS CONSTRUCTED. I ASSUME RESPONSIBILITY FOR THE DESIGN OF THIS PROJECT EXCEPT AS MAY BE MODIFIED DURING CONSTRUCTION BY THE CONTRACTOR AND/OR AUTHORIZED REPRESENTATIVES. I ASSUME NO RESPONSIBILITY FOR THE DESIGN OF ANY TEMPORARY CONSTRUCTION WORK OR METHODS WHICH MAY BE REQUIRED OR USED BY THE CONTRACTOR IN THE PERFORMANCE OF THE CONTRACT AND WHICH ARE NOT INCORPORATED IN THE PERMANENT PROJECT.

STATE OF MISSOURI
KIRSTEN MUNCK
NUMBER PE-2003001076
PROFESSIONAL ENGINEER

FINAL PLANS

BRIDGE APPROACH SLAB

Detailed Mar. 2002
Checked July 2002

Note: This drawing is not to scale. Follow dimensions.

Sheet No. 17 of 18

JACKSON COUNTY A09912

barbill_i June 2002

BILL OF REINFORCING STEEL

NO. REQ'D.	MARK NO. SIZE	MARK NO. MARK	LOCATION	EPOXY (E)	SHAPE NO.	STIRRUP (S)	SUBSTR. (X)	VARIES (V)	NO. EACH	DIMENSIONS B FT.	B IN.	C FT.	C IN.	D FT.	D IN.	E FT.	E IN.	F FT.	F IN.	H FT.	H IN.	K FT.	K IN.	NOMINAL LENGTH FT.	NOMINAL LENGTH IN.	ACTUAL LENGTH FT.	ACTUAL LENGTH IN.	WEIGHT LBS.
			SUPERSTR.																									172
			END BTS 1&7																									241
																												586
* 6	6	H1	BACKWALL	E	20					26	9.000													26	9	26	9	241
8	6	H2	BARRIER CURB	E	20					26	9.000													26	9	26	9	321
52	5	H3	BACKWALL	E	19						21.000	18.000												3	3	3	2	172
																												15049
38	4	U1	BACKWALL	E	10	S						18.000		9.000										3	9	3	7	91
38	4	U2	BACKWALL	E	10	S						13.000		15.000										3	5	3	3	82
																												15370
975	5	R3	BARRIER CURB	E	13	S					12.000	19.750		12.000		19.750								6	3	5	11	6017
12	5	R4	BARRIER CURB	E	20					7	3.000													7	3	7	3	91
36	5	R5	BARRIER CURB	E	20					9	3.000													9	3	9	3	347
72	5	R6	BARRIER CURB	E	20					9	9.000													9	9	9	9	732
44	5	R7	BARRIER CURB	E	13	S					22.500	22.000		22.500		22.000								8	4	8	0	367
28	5	R8	BARRIER CURB	E	13	S					18.750	22.000		18.750		22.000								7	9	7	5	217
4	5	R9	BARRIER CURB	E	13	S					18.750	17.000		18.750		17.000								6	11	6	7	27
40	5	R10	BARRIER CURB	E	20					6	0.000													6	0	6	0	250
8	5	R11	BARRIER CURB	E	20					5	9.000													5	9	5	9	48
* 14	5	R12	BARRIER CURB	E	20					13	9.000													13	9	13	9	201
12	5	R13	BARRIER CURB	E	20					8	5.000													8	5	8	5	105
12	5	R14	BARRIER CURB	E	20					34	1.000													34	1	34	1	427
24	5	R15	BARRIER CURB	E	20					33	3.000													33	3	33	3	832
18	5	R16	BARRIER CURB	E	20					28	1.000													28	1	28	1	527
12	5	R17	BARRIER CURB	E	20					28	9.000													28	9	28	9	360
12	5	R18	BARRIER CURB	E	20					27	8.000													27	8	27	8	346
12	5	R19	BARRIER CURB	E	20					35	3.000													35	3	35	3	441
24	5	R20	BARRIER CURB	E	20					34	7.000													34	7	34	7	866
18	5	R21	BARRIER CURB	E	20					29	2.000													29	2	29	2	548
12	5	R22	BARRIER CURB	E	20					30	0.000													30	0	30	0	375
12	5	R23	BARRIER CURB	E	20					28	8.000													28	8	28	8	359
123	5	R24	BARRIER CURB	E	13	S					12.000	20.500		12.000		20.500								6	4	6	0	770
12	5	R25	BARRIER CURB	E	20					26	10.000													26	10	26	10	336
6	5	R26	BARRIER CURB	E	20					2	3.000													2	3	2	3	14
6	5	R27	BARRIER CURB	E	20					29	2.000													29	2	29	2	183
6	5	R28	BARRIER CURB	E	20					31	9.000													31	9	31	9	199
6	5	R29	BARRIER CURB	E	20					3	8.000													3	8	3	8	23
8	5	R30	BARRIER CURB	E	10							18.000	2	1.500										5	2	4	11	41
			TOTALS																									
	4			E																								173
	5			E																								15221
	6			E																								562
			TOTAL																									0
			TOTAL	E																								15956
			Slab on																									
			Girder																									
	4			E																								173

BILL OF REINFORCING STEEL

NO. REQ'D.	MARK NO. SIZE	MARK NO. MARK	LOCATION	EPOXY (E)	SHAPE NO.	STIRRUP (S)	SUBSTR. (X)	VARIES (V)	NO. EACH	DIMENSIONS B FT.	B IN.	C FT.	C IN.	D FT.	D IN.	E FT.	E IN.	F FT.	F IN.	H FT.	H IN.	K FT.	K IN.	NOMINAL LENGTH FT.	NOMINAL LENGTH IN.	ACTUAL LENGTH FT.	ACTUAL LENGTH IN.	WEIGHT LBS.
	5			E																								172
	6			E																								241
			TOTAL																									586
			Safety																									
			Barrier																									
			Curb																									
	5			E																								15049
	6			E																								321
			TOTAL																									15370

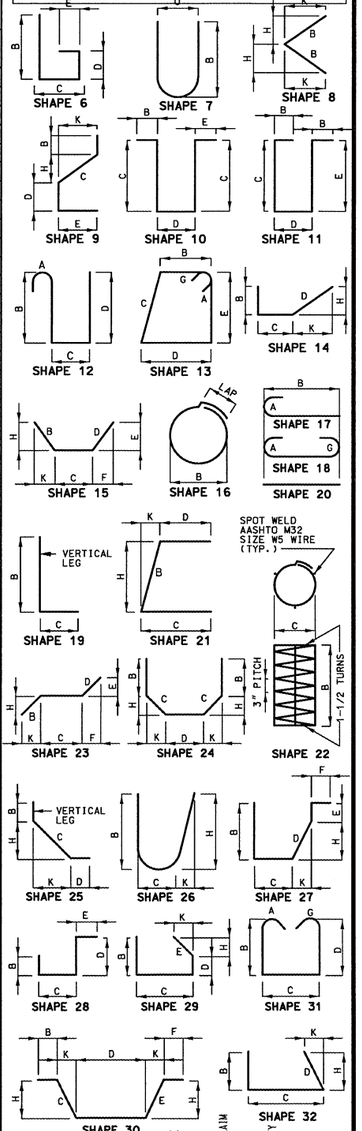

State	Proj. No.	Sheet No.
MO	J410712	B33
021115-407	I-435-1(277)	

6d FOR #4 AND #5.
12d FOR #6

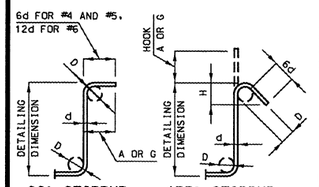

DETAILED JULY 2002
CHECKED JULY 2002

STIRRUP HOOK DIMENSIONS GRADES 40 - 50 - 60 KSI				
BAR SIZE	D (IN.)	90° HOOK HOOK A OR G	135° HOOK HOOK A OR G	135° HOOK APPROX. H
#4	2"	4-1/2"	4-1/2"	3"
#5	2-1/2"	6"	5-1/2"	3-3/4"
#6	4-1/2"	12"	8"	4-1/2"

NOTE: UNLESS OTHERWISE NOTED DIAMETER "D" IS THE SAME FOR ALL BENDS AND HOOKS ON A BAR.

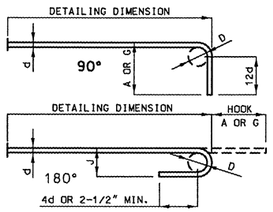

END HOOK DIMENSIONS					
		ALL GRADES			
		180° HOOKS		90° HOOKS	
BAR SIZE	D (IN.)	A OR G	J	A OR G	
#3	2-1/4"	5"	3"	6"	
#4	3"	6"	4"	8"	
#5	3-3/4"	7"	5"	10"	
#6	4-1/2"	8"	6"	12"	
#7	5-1/4"	10"	7"	14"	
#8	6"	11"	8"	16"	
#9	9-1/2"	15"	11-3/4"	19"	
#10	10-3/4"	17"	13-1/4"	22"	
#11	12"	19"	14-3/4"	2'-0"	
#14	18-1/4"	2'-3"	21-3/4"	2'-7"	

TWO ADDITIONAL #6H1 & #5R12 ARE INCLUDED IN THE BAR BILL FOR TESTING.

NOTE:
ALL STANDARD HOOKS AND BENDS OTHER THAN 180 DEG. TO BE BENT WITH THE SAME PROCEDURE AS FOR 90 DEG. STD. HOOKS.
HOOKS AND BENDS SHALL BE IN ACCORDANCE WITH THE PROCEDURES AS SHOWN ON THIS SHEET.
E = EPOXY COATED REINFORCEMENT.
S = STIRRUP.
X = BAR IS INCLUDED IN SUBSTRUCTURE QUANTITIES.
V = BAR DIMENSIONS VARY IN EQUAL INCREMENTS BETWEEN DIMENSIONS SHOWN ON THIS LINE AND THE FOLLOWING LINE.
NO. EA. = NUMBER OF BARS OF EACH LENGTH.
NOMINAL LENGTHS ARE BASED ON OUT TO OUT DIMENSIONS SHOWN IN BENDING DIAGRAMS AND ARE LISTED FOR FABRICATOR'S USE (NEAREST INCH).
ACTUAL LENGTHS ARE MEASURED ALONG CENTERLINE BAR TO THE NEAREST INCH.
PAYWEIGHTS ARE BASED ON ACTUAL LENGTHS.
FOUR ANGLE OR CHANNEL SPACERS ARE REQUIRED FOR EACH COLUMN SPIRAL. SPACERS ARE TO BE PLACED ON INSIDE OF SPIRALS. LENGTH AND WEIGHT OF COLUMN SPIRALS DO NOT INCLUDE SPLICES OR SPACERS.
REINFORCING STEEL (GRADE 60) = FY 60.000 PSI.

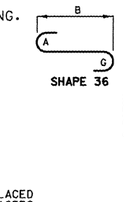

BENDING DIAGRAMS

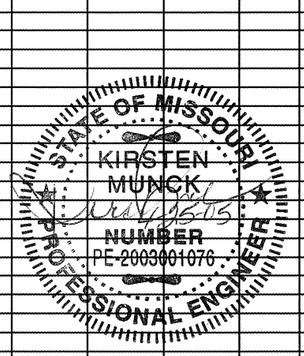

I CERTIFY THAT THIS PLAN SHEET ACCURATELY DEPICTS THE CONFIGURATION AND LOCATION OF THE ROADWAY AND ALL APPURTENANT FEATURES, TO THE BEST OF MY KNOWLEDGE, AND THAT ALL RIGHTS ARE RESERVED SPECIFICALLY DISCLAIM ANY RESPONSIBILITY FOR THE DESIGN OF THIS PROJECT. AUTHORIZED THE MODIFICATION OF THE PROJECT DESIGN DURING ITS CONSTRUCTION, AND I DISCLAIM RESPONSIBILITY FOR THE CONTRACTOR'S ACTUAL CONSTRUCTION OF THE PROJECT. EXCEPT AS I AND MY STAFF MAY HAVE DIRECTED OR ORDERED THAT THE PROJECT BE CONSTRUCTED.

FINAL PLANS

4-25-05
DATE

SIGNATURE

NOTE: THIS DRAWING IS NOT TO SCALE. FOLLOW DIMENSIONS.

SHEET NO. 18 OF 18

JACKSON COUNTY

A09912

123

J:\PROJECTS\J410712\MicroStation\Bridge\J410712\A09912\A09912_018.dgn 02:26:25 PM 02/25/2005