MISSOURI STATE HIGHWAY DEPARTMENT

FED. RD. DIST. NO.	STATE	FEDERAL PROJECT NO. & SEC.	FISCAL YEAR	SHEET NO.	TOTAL SHEETS
5	MO			24	
DIST. NO.		COUNTY		ROUTE	ETC.
4		JACKSON			

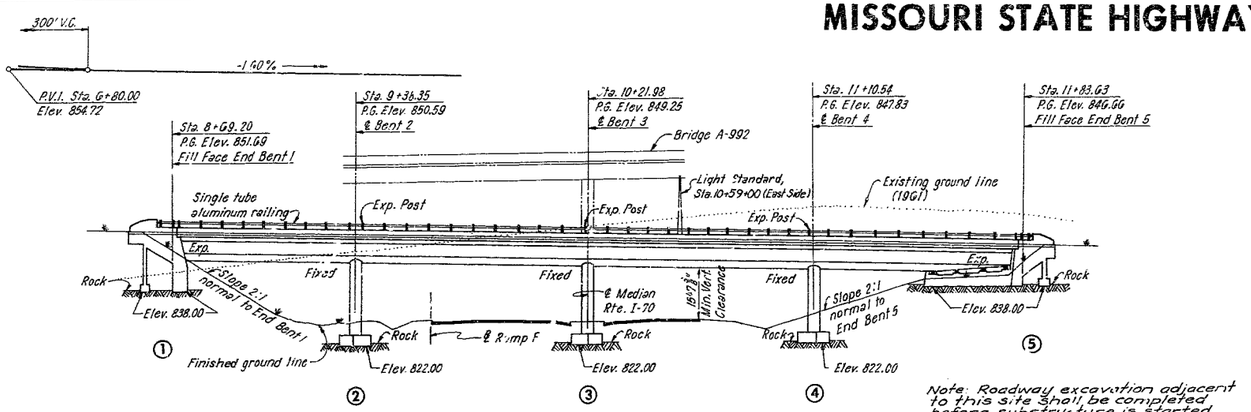

Note: Roadway excavation adjacent to this site shall be completed before substructure is started. See Special Provisions.

68', 85', 90', 72' CONTINUOUS CONCRETE BOX GIRDER SPANS

ELEVATION

BENCH MARKS

B.M. No. 8
S.W. Cor. Flag Pole Foundation
In School Yard 221' Rt. Rte. I-70
Sta. 313+49. Elev. 854.31

B.M. No. 9
Nail in P.P. 270' Lt. Rte. I-70
Sta. 322+00. Elev. 870.89

Note:
All dimensions shown are horizontal.
See sheet 6 for substructure layout data.
Bents cannot be located from the reference point on the tangent by conventional survey methods based on 100' chords.

GENERAL NOTES

Design Specifications

A.A.S.H.O. 1961.

Design Loading

H20-S16-44 with 15#/sq.ft. future wearing surface.

Concrete

Concrete Stress - Class B1 fc = 1,600 p.s.i.
Class B fc = 1,200 p.s.i.
Concrete for superstructure shall be Class B1 air-entrained. Concrete for substructure shall be Class B air-entrained.

Reinforcing Steel

Allowable stress 20,000 p.s.i. All splices in reinforcing steel shall be 32 bar diameters.
Bar sizes are designated on the plans by numbers. The first digit after the letter in three digit marks and the first two digits after the letter in four digit marks indicate the size of bar.
Dimensions shown on the plans from the reinforcing steel to outside edge of concrete are all clear dimensions.
All bending dimensions are from "out to out" of bars.

Joint Filler

Where joint filler is specified on the plans it shall conform with the requirements for gray sponge rubber compound joints as given in Section 157.2.4 of the Standard Specifications.

Metal Conduits

Expansion fittings shall be required in steel conduit at all expansion joints. Expansion fittings shall be O. Z. Electrical Manufacturing Company Type AX-125 with AJ bonding jumper or equal.

Sealing of Decks

Superstructure deck to be surface sealed.
See Special Provisions.

Utilities

All utilities, unless shown otherwise, shall be removed or relocated by others. The Contractor will notify the owner of the utilities of his work schedule sufficiently in advance to allow time for the disposition of utilities.

Shipping

Permits [illegible] be obtained for all truck loads over legal [illegible].

Excavation to Rock

All loose, shelly or disintegrated rock shall be removed and footings placed on hard, solid, undisturbed rock. If soft rock or shale is encountered, the footings shall be carried at least 18" into and cast against vertical faces of same. In no case shall the footings be placed higher than elevations shown. Bearing of 12 tons per sq.ft. was used in design of footings.

Painting

Paint: Shop none, except as noted for bearings; Field, three coats of red lead for surfaces inaccessible after erection. All other exposed surfaces except as noted for bearings first coat red lead, second coat brown, third coat aluminum except that final coat on access doors and frames shall be gray. Payment for paint, cleaning and painting such surfaces shall be included in the unit price bid for Fabricated Structural Carbon Steel.

ESTIMATED QUANTITIES

ITEM	UNIT	SUBSTR.	SUPERSTR.	TOTAL
Class 1 Excavation for Structures	Cu. Yd.	240		240
Class B Concrete	Cu. Yd.	119.1		119.1
Class B1 Concrete	Cu. Yd.		655.5	655.6
Fabricated Structural Carbon Steel	Lbs.		5,230	5,230
Reinforcing Steel	Lbs.	16,200	287,890	304,090
Bridge Rail (Single Tube Type)	Lin. Ft.		665	665
Conduit System (On Structure)	L.S.			1

Quantity Notes

Class 1 Excavation for Structures will be measured from the existing ground line or from the lower limits of roadway excavation, whichever is lower, regardless of the sequence of operations or method of removal.

All excavation for bridge will be paid for as Class 1 Excavation for Structures.

All concrete and reinforcement at intermediate bents above top of footing are included in superstructure quantities. Estimated quantity of Class B concrete substructure includes all concrete in end bents and intermediate bent footings. All other concrete is included in estimated quantity of Class B1 concrete.
Weight of bearings is included in weight of Fabricated Structural Carbon Steel.

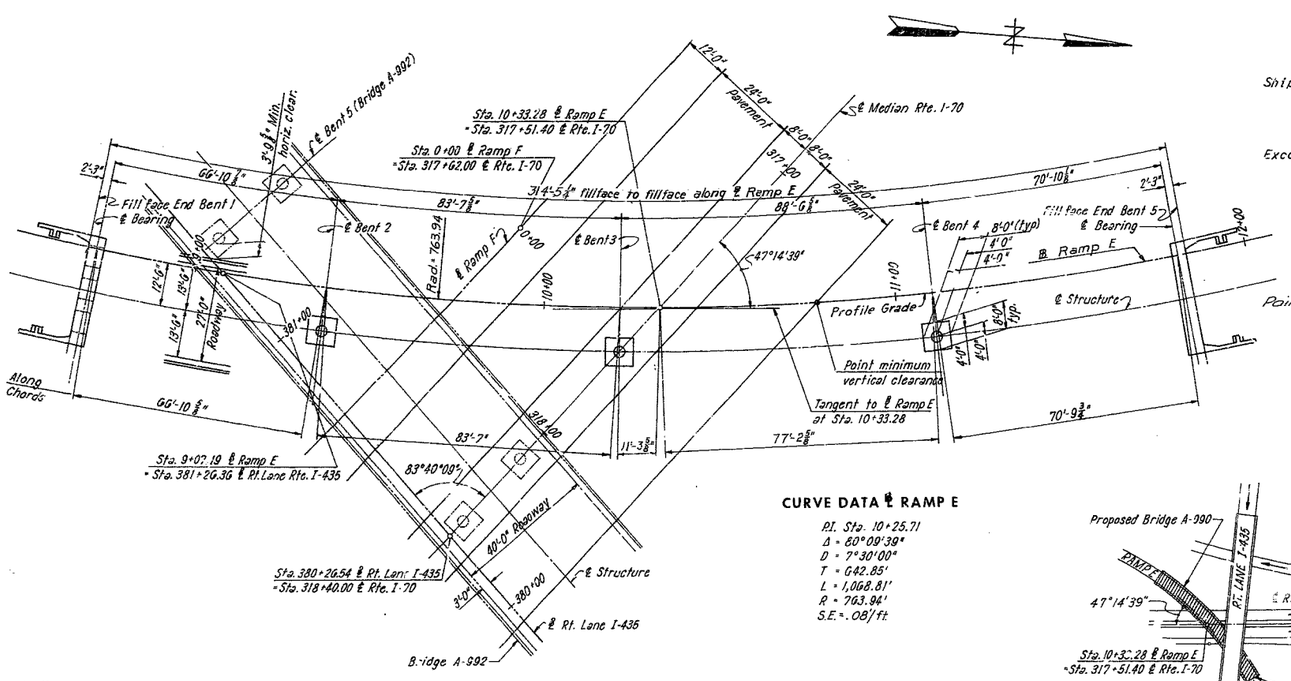

PLAN

CURVE DATA ℄ RAMP E

P.I. Sta. 10+25.71
Δ = 60°09'39"
D = 7°30'00"
T = 642.85'
L = 1,068.81'
R = 763.94'
S.E. = .08/ft

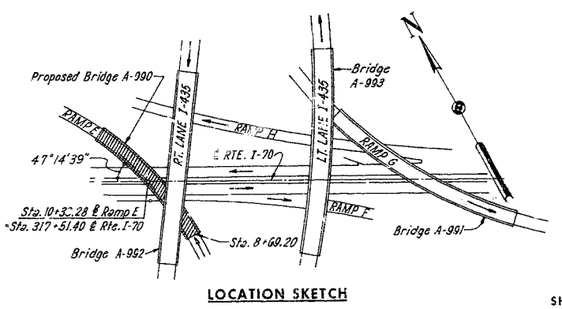

LOCATION SKETCH

HOWARD, NEEDLES, TAMMEN & BERGENDOFF
CONSULTING ENGINEERS
KANSAS CITY — NEW YORK

MADE GLC	DATE 1-30-62	TRACED	DATE
CHECKED JLH	DATE 3-13-62	SCALE	

NOTE: This drawing is not to scale. Follow dimensions.

SHEET 1 OF 13

SUBMITTED BY R. M. Bergendoff
REGISTERED PROFESSIONAL ENGINEER
MISSOURI NO. E-253

BRIDGE: RAMP "E" OVER RTE. I-70 & RAMP "F"

STATE ROAD - ROUTES I-435 & I-70 INTERCHANGE
FROM ROUTE 40 TO LEEDS ROAD
PROJECT NO. I-435-1(24)(RTE. I-435) STA. 10+33.28 (℄ RAMP "E")

JACKSON COUNTY

SUBMITTED BY [illegible] DATE 9/28/62
BRIDGE ENGINEER
APPROVED BY [illegible] DATE 9/28/62
CHIEF ENGINEER

STD. 54.00
A-990

277

MISSOURI STATE HIGHWAY DEPARTMENT

FED. ROAD DIV. NO.	STATE	FEDERAL PROJECT NO. & SEC.	FISCAL YEAR	SHEET NO.	TOTAL SHEETS
5	MO			25	
DIST. NO.	COUNTY		ROUTE	SEC.	
4	JACKSON				

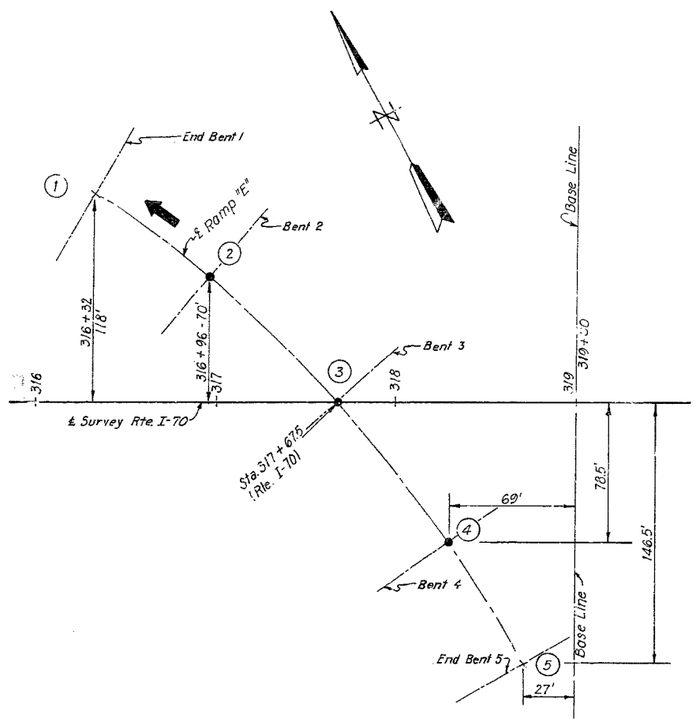

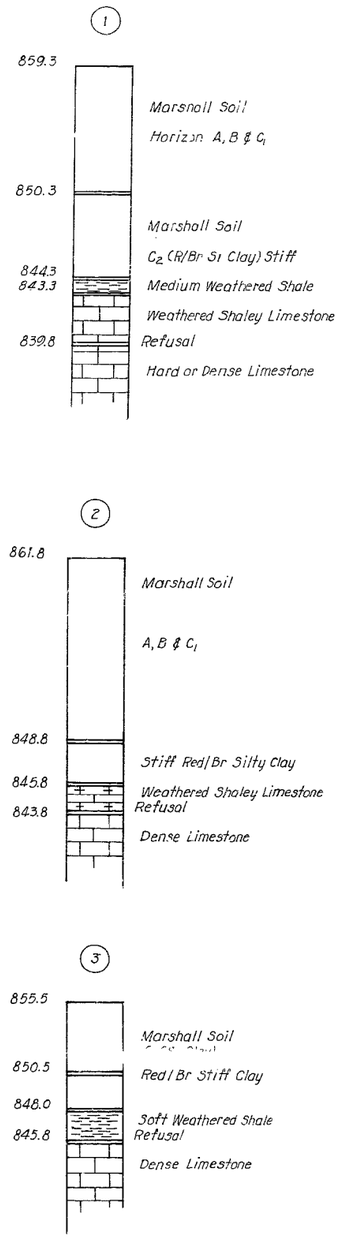

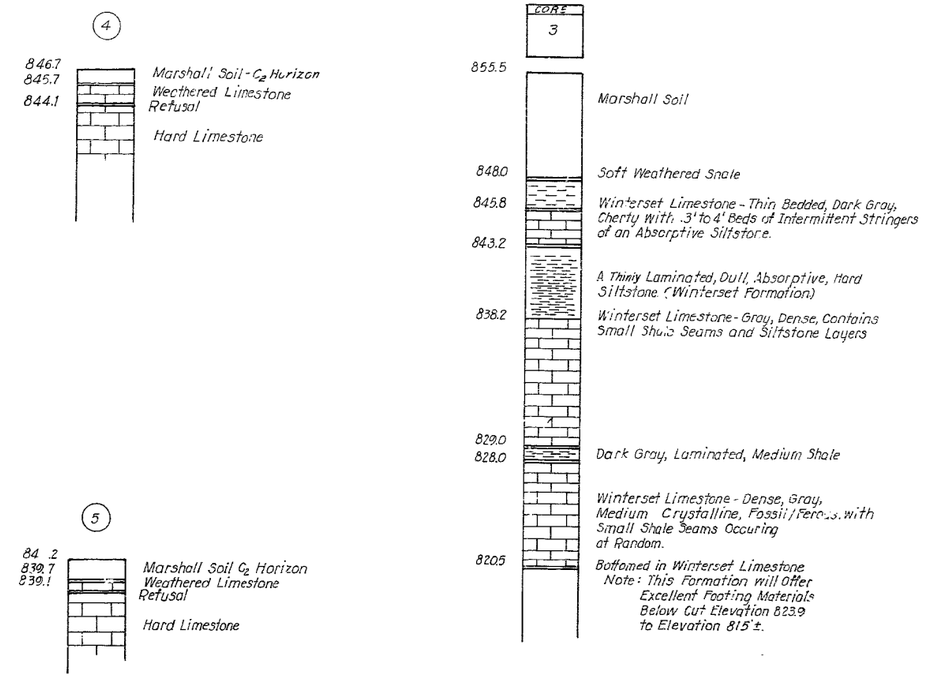

Note:
All soundings are made with power auger except as noted for number 3.

LOG OF SOUNDINGS

278

BRIDGE: RAMP "E" OVER RTE. I-70 & RAMP "F"

STATE ROAD - ROUTES I-435 & I-70 INTERCHANGE
FROM ROUTE 40 TO LEEDS ROAD
PROJECT NO. I-435-1(24)(RTE. I-435) STA. 10+33.28 (℄ RAMP "E")

JACKSON COUNTY

HOWARD, NEEDLES, TAMMEN & BERGENDOFF
CONSULTING ENGINEERS
KANSAS CITY NEW YORK

MADE J.L.W.	DATE 2-8-62	TRACED	DATE
CHECKED L.W.R.	DATE 2-9-62	SCALE	

NOTE: This drawing is not to scale. Follow dimensions.

SHEET 2 OF 13

A-990

MISSOURI STATE HIGHWAY DEPARTMENT

FED. ROAD DIV. NO.	STATE	FEDERAL PROJECT NO. & SEC.	FISCAL YEAR	SHEET NO.	TOTAL SHEETS
5	MO			26	
DIST. NO.	COUNTY			ROUTE	SEC.
4	JACKSON				

BILL OF REINFORCEMENT

NO.	MARK	LENGTH	SHAPE	LOCATION
		SUBSTRUCTURE		
		END BENT 1		
16	F601	2'-8"	Str.	Footing
12	F602	4'-8"	L	Footing
22	F603	15'-11"		Pedestal
4	F604	19'-8"		
4	F605	18'-2"		
4	F606	16'-8"		
4	F607	15'-2"		
1	F608	20'-5"		
1	F609	18'-11"		
1	F610	17'-5"		
1	F611	15'-11"		Pedestal
4	H501	15'-3"	Str.	Wingwall
2	H502	7'-1"		Maskwall
2	H503	7'-9"		
2	H504	8'-5"		
2	H505	9'-1"		Maskwall
4	H506	16'-3"	Str.	Wingwall
18	H507	6'-11"		Counterfort
4	H508	8'-2"	Str.	End Post
4	H509	6'-6"	Str.	End Post
3	H601	15'-5"	Str.	Wingwall
3	H602	16'-7"		
1	H603	13'-0"		
1	H604	10'-0"		
1	H605	6'-3"		
1	H606	6'-6"		
1	H607	3'-0"		
1	H608	3'-9"		
2	H609	15'-6"	Str.	
10	H610	8'-3"		
3	H611	16'-5"	Str.	
3	H612	17'-7"		
5	H613	14'-0"		
1	H614	10'-5"		
1	H615	7'-0"		
1	H616	7'-6"		
1	H617	3'-9"		
1	H618	4'-6"		
2	H619	16'-6"		Wingwall
10	H620	31'-3"		Beam
8	H621	31'-5"	Str.	Backwall
15	V401	5'-11"		Wingwall
12	V501	3'-2"	Str.	Wingwall
6	V502	14'-8"	Str.	Counterfort
18	V503	9'-7"		End Post
12	V504	6'-8"	Str.	Maskwall
38	V505	6'-9"	Str.	Backwall
6	V506	12'-6"	Str.	Counterfort
23	V507	7'-6"		Wingwall
2	V508	4'-4"	Str.	Wingwall
2	V509	14'-0"		Beam
20	V510	15'-6"		Beam
2	V511	4'-6"	Str.	Wingwall
2	V512	5'-3"		
2	V513	6'-0"		
2	V514	6'-9"		
2	V515	7'-6"		
2	V516	8'-3"		
2	V517	5'-1"	Str.	Wingwall

BILL OF REINFORCEMENT

NO.	MARK	LENGTH	SHAPE	LOCATION
		SUBSTRUCTURE		
		END BENT 1 (Cont'd)		
2	V518	5'-10"	Str.	Wingwall
2	V519	6'-7"		
2	V520	7'-4"		
2	V521	8'-0"		
2	V522	3'-9"	Str.	Wingwall
		END BENT 5		
16	F650	[illegible]-8"	Str.	Footing
6	F651	9'-4"	L	Footing
6	F652	11'-6"	L	Footing
4	H550	16'-3"	Str.	Wingwall
4	H551	15'-3"	Str.	Wingwall
2	H552	7'-1"		Maskwall
2	H553	7'-9"		
2	H554	8'-5"		
2	H555	9'-1"		Maskwall
9	H556	6'-11"		Counterfort
4	H557	8'-2"	Str.	End Post
4	H558	6'-6"	Str.	End Post
3	H650	16'-5"	Str.	Wingwall
3	H651	17'-7"		Wingwall
5	H652	14'-0"		Wingwall & Beam
1	H653	10'-9"		Wingwall
1	H654	7'-0"		
1	H655	8'-0"		
1	H656	4'-3"		
1	H657	5'-0"		
2	H658	14'-6"		
1	H659	4'-0"	Str.	
10	H660	8'-3"		
3	H661	15'-5"	Str.	
3	H662	16'-7"		
1	H663	13'-0"		
1	H664	10'-0"		
1	H665	6'-3"		
1	H666	6'-10"		
1	H667	3'-3"		
1	H668	3'-10"		
2	H669	15'-3"		Wingwall
8	H670	31'-5"		Backwall
12	H671	31'-3"		Beam
3	H672	5'-5"	Str.	Beam
15	V450	5'-11"		Wingwall
12	V550	3'-2"	Str.	
2	V551	4'-6"		
2	V552	5'-3"		
2	V553	6'-0"		
2	V554	6'-9"		
2	V555	7'-6"		
2	V556	8'-3"		
2	V557	9'-0"	Str.	Wingwall
18	V558	9'-7"		End Post
2	V559	4'-10"	Str.	Wingwall
2	V560	5'-6"		
2	V561	6'-3"		
2	V562	7'-0"		
2	V563	7'-7"		
2	V564	8'-5"	Str.	Wingwall

BILL OF REINFORCEMENT

NO.	MARK	LENGTH	SHAPE	LOCATION
		SUBSTRUCTURE		
		END BENT 5 (Cont'd)		
23	V565	7'-6"		Wingwall
12	V566	6'-8"	Str.	Maskwall
38	V567	6'-9"	Str.	Backwall
2	V568	14'-6"		Beam
3	V569	30'-2"		
3	V570	34'-5"		
4	V571	14'-7"		
4	V572	18'-7"		Beam
		SUBSTRUCTURE		
		INT. BENT 2		
32	F1121	7'-8"	Str.	Footing
18	F1421	9'-7"		Footing
		INT. BENT 3		
32	F1131	7'-8"	Str.	Footing
18	F1431	9'-7"		Footing
		INT. BENT 4		
32	F1141	7'-8"	Str.	Footing
18	F1441	9'-7"		Footing

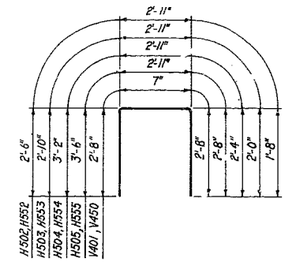

H502, H552, H503, H553, H504 H554, H505, H555, V401, V450

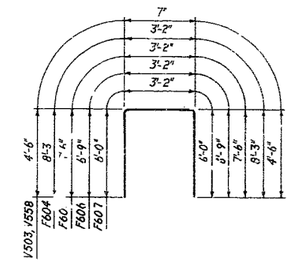

V503, V558, F604, F605, F606, F607

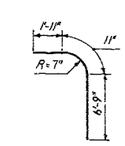

F1421, F1431, F1441

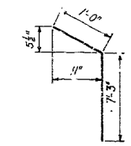

H660, H610

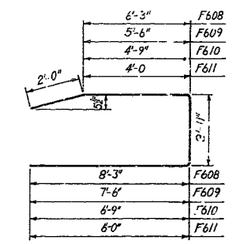

F608, F609, F610, F611

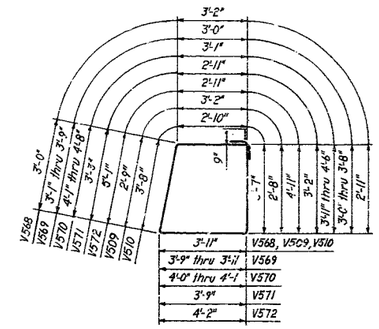

V568, V569, V570, V571, V572, V509, V510

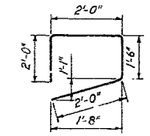

V507, V565

F602	4'-0"	8"
F651	8'-8"	8"
F652	10'-10"	8"

F602, F651, F652

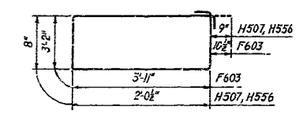

F603, H507, H556

BENDING DIAGRAMS

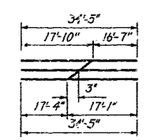

3-V570 Cut 3 Bend 6

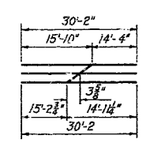

3-V569 Cut 3 Bend 6

CUTTING DIAGRAMS

Note
Hooks and bends shall be in accordance with ACI Manual of Standard Practice for Detailing Reinforced Concrete Structures. (ACI-315-57)

BRIDGE: RAMF "E" OVER RTE. I-70 & RAMP "F"

STATE ROAD - ROUTES I-435 & I-70 INTERCHANGE
FROM ROUTE 40 TO LEEDS ROAD
PROJECT NO. I-435-1(24)(RTE. I-435) STA. 10+33.28 (℄ RAMP "E")

JACKSON COUNTY

SHEET 3 OF 13

A-990

HOWARD, NEEDLES, TAMMEN & BERGENDOFF
CONSULTING ENGINEERS
KANSAS CITY NEW YORK

MADE GLC & S.A.L.	DATE 3-20-62	TRACED	DATE
CHECKED L.J.R.	DATE 4-17-62	SCALE	

677

MISSOURI STATE HIGHWAY DEPARTMENT

FED. ROAD DIV. NO.	STATE	FEDERAL PROJECT NO. & SEC.	FISCAL YEAR	SHEET NO.	TOTAL SHEETS
5	MO			27	
DIST. NO.	COUNTY		ROUTE	SEC.	
4	JACKSON				

BILL OF REINFORCEMENT

NO.	MARK	LENGTH	SHAPE	LOCATION
		SUPERSTRUCTURE		
96	D501	10'-6"		Int. Diaph.
4	D502	11'-8"		Spec. Diaph.
48	D601	24'-8"	Str.	End & Int. Diaph.
44	D602	12'-3"		End Diaph.
8	D603	15'-1"		End Diaph.
4	D604	9'-9"		Spec. Diaph.
4	D605	31'-5"	Str.	End Diaph.
148	G401	30'-0"	Str.	Girder Web
4	G402	22'-9"		
4	G403	31'-0"		
16	G404	23'-0"		
4	G405	24'-3"		
4	G406	31'-10"		
4	G407	21'-9"		
4	G408	25'-8"		
4	G409	41'-10"		
4	G410	31'-6"		
4	G411	27'-0"		
4	G412	51'-9"		
4	G418	41'-4"	Str.	Girder Web
374	G501	7'-7"		Girder Web
1126	G502	7'-7"		
1132	G503	7'-7"		
380	G504	7'-7"		Girder Web
32	G801	60'-0"	Str.	Girder Web
2	G802	22'-9"		
2	G803	33'-0"		
2	G804	31'-6"		
2	G805	24'-3"		
2	G806	33'-10"		
2	G807	32'-5"		
2	G808	25'-8"		
2	G809	34'-10"		
2	G810	33'-6"		
2	G811	27'-0"		
2	G812	35'-9"		
2	G813	34'-4"	Str.	Girder Web
8	P501	30'-3"	Str.	Parapet
8	P502	8'-2"		
8	P503	32'-4"		
32	P504	9'-8"		
8	P505	34'-10"		
8	P506	32'-0"		
8	P507	8'-8"		
8	P508	31'-8"		
8	P509	34'-0"		
8	P510	36'-7"		
8	P511	33'-7"	Str.	Parapet
1	P512	6'-6"		Lt. Std. Support
1	P513	6'-3"		
1	P514	6'-0"		
3	P515	7'-8"		
2	P516	2'-4"	Str.	
1	P517	5'-9"		Lt. Std. Support

BILL OF REINFORCEMENT

NO.	MARK	LENGTH	SHAPE	LOCATION
297	S401	6'-3"		Curb
325	S402	5'-10"		Curb
306	S501	31'-0"	Str.	Bot. of Top Slab
204	S502	37'-6"	Str.	Bot. of Top Slab
363	S503	24'-8"	Str.	Bottom Slab
602	S601	31'-5"	Str.	Top of Top Slab
598	S602	27'-9"	Str.	Bot. of Top Slab
32	S603	5'-[illegible]"	Str.	Bottom Slab
38	S801	58'-[illegible]"	Str.	Top of Top Slab
76	S802	60'-0"		Top of Top Slab
30	S803	43'-9"		Bottom Slab
30	S804	41'-9"		Bottom Slab
30	S805	42'-9"	Str.	Bottom Slab
38	S806	56'-0"	Str.	Top of Top Slab
18	S1001	20'-0"	Str.	Top of Top Slab
38	S1002	35'-0"		
19	S1003	40'-0"		
38	S1004	37'-0"		Top of Top Slab
14	S1005	39'-0"		Bottom Slab
60	S1006	52'-0"		
14	S1007	38'-0"		
30	S1008	58'-0"		
30	S1009	49'-0"		
30	S1010	56'-0"	Str.	Bottom Slab
38	S1101	44'-0"	Str.	Top of Top Slab
36	S1102	20'-0"		Top of Top Slab
38	S1103	32'-0"		Top of Top Slab
14	S1104	40'-0"		Bottom Slab
30	S1105	60'-0"		Bottom Slab
14	S1106	39'-0"	Str.	Bottom Slab
60	W401	30'-0"	Str.	Curb
4	W402	10'-0"		
4	W403	25'-9"		
16	W404	23'-0"		
4	W405	14'-3"		
4	W406	12'-9"		
4	W407	29'-0"		
4	W408	4'-3"		
4	W409	16'-3"	Str.	
297	W410	6'-9"		6'-0"
325	W411	6'-1"		5'-4"
13	W412	5'-11"		
16	W413	2'-0"	Str.	Curb

BILL OF REINFORCEMENT

NO.	MARK	LENGTH	SHAPE	LOCATION
		SUPERSTRUCTURE		
		INT. BENT 2		
14	B521	31'-6"	Str.	Beam
6	B621	24'-8"	Str.	
74	B622	12'-8"		
6	B1121	24'-8"	Str.	
4	B1122	15'-0"		
10	B1421	27'-7"		
4	B1422	24'-8"		
8	B1423	15'-0"		
2	B1821	27'-7"	Str.	Beam
1	C421	845'-8"		Column
18	C1421	27'-8"		Column
		INT. BENT 3		
14	B531	31'-6"	Str.	Beam
6	B631	24'-8"	Str.	
74	B632	12'-8"		
6	B1131	24'-8"	Str.	
4	B1132	15'-0"		
10	B1431	27'-7"		
4	B1432	24'-8"		
8	B1433	15'-0"		
2	B1831	27'-7"	Str.	Beam
1	C431	795'-10"		Column
18	C1431	26'-4"		Column
		INT. BENT 4		
14	B541	31'-6"	Str.	Beam
6	B641	24'-8"	Str.	
74	B642	12'-8"		
6	B1141	24'-8"	Str.	
4	B1142	15'-0"		
10	B1441	27'-7"		
4	B1442	24'-8"		
8	B1443	15'-0"		
2	B1841	27'-7"	Str.	Beam
1	C441	743'-1"		Column
18	C1441	24'-11"		Column

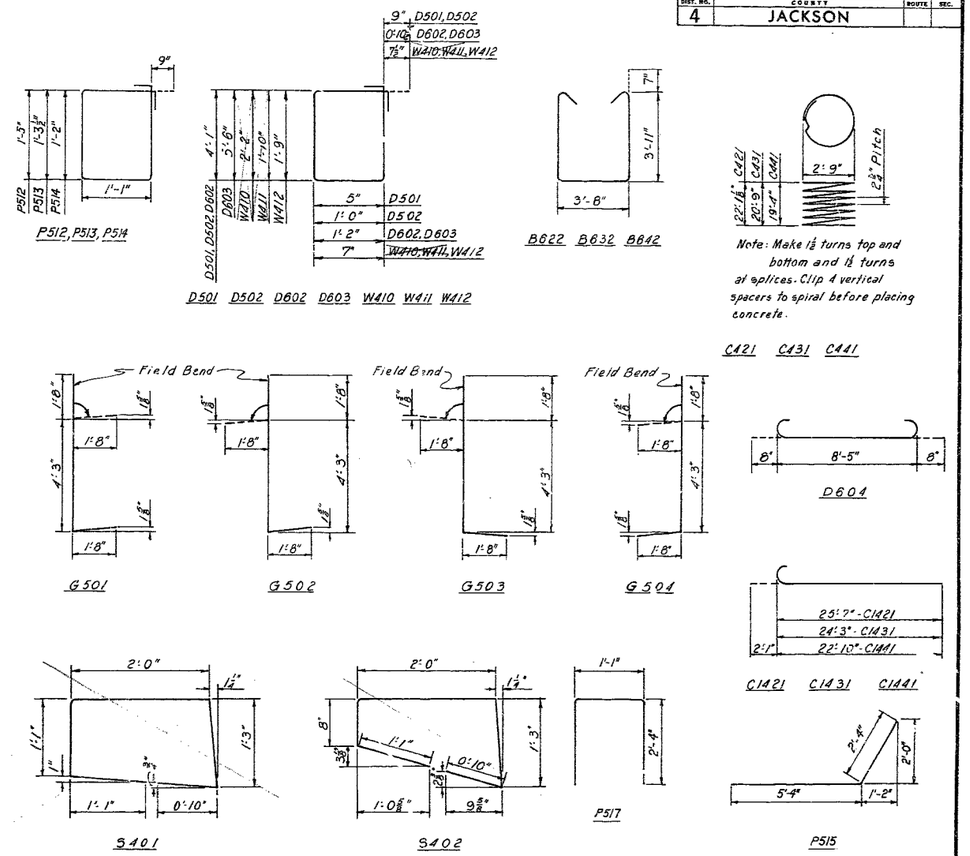

BENDING DIAGRAMS

Note
Hooks and bends shall be in accordance with ACI Manual of Standard Practice for Detailing Reinforced Concrete Structures. (ACI-315-57)

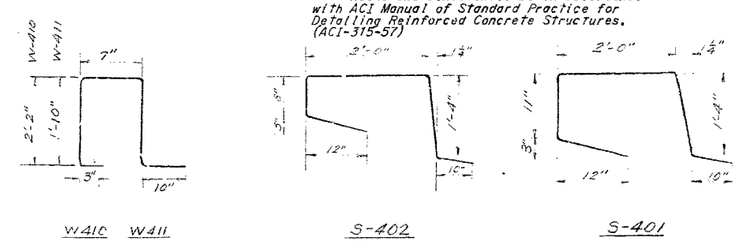

BRIDGE: RAMP "E" OVER RTE. I-70 & RAMP "F"

STATE ROAD - ROUTES I-435 & I-70 INTERCHANGE
FROM ROUTE 40 TO LEEDS ROAD
PROJECT NO. I-435-1(24)(RTE. I-435) STA. 10+33.28 (℄ RAMP "E")

JACKSON COUNTY

SHEET 4 OF 13

A-990

HOWARD, NEEDLES, TAMMEN & BERGENDOFF
CONSULTING ENGINEERS
KANSAS CITY NEW YORK

MADE G.L.C. S.R.L. DATE 3-9-62 TRACED DATE
CHECKED L.J.R. DATE 4-17-62 SCALE

280

CONSTRUCTION CHANGES NOTED HEREON

MISSOURI STATE HIGHWAY DEPARTMENT

FED. ROAD DIV. NO.	STATE	FEDERAL PROJECT NO. & SEC.	FISCAL YEAR	SHEET NO.	TOTAL SHEETS
5	MO			28	
DIST. NO.	COUNTY			ROUTE	SEC.
4	JACKSON				

Note:
Dimensions with * are given at front face of backwall.

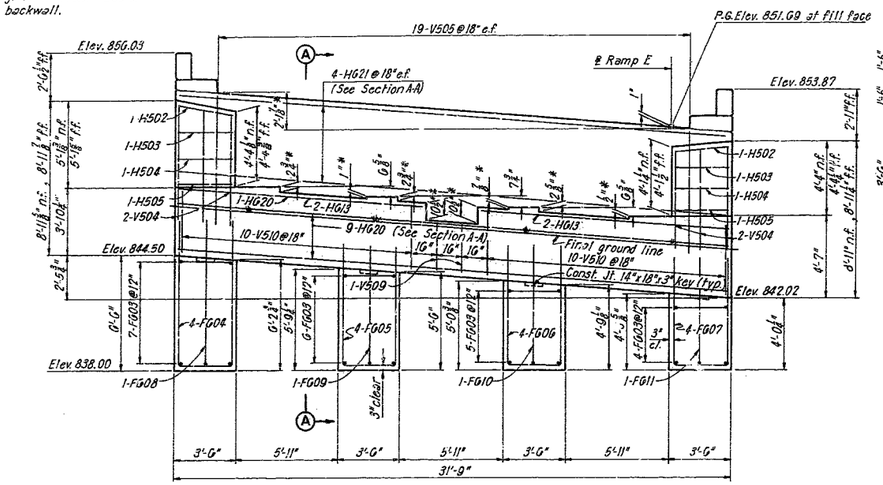

ELEVATION

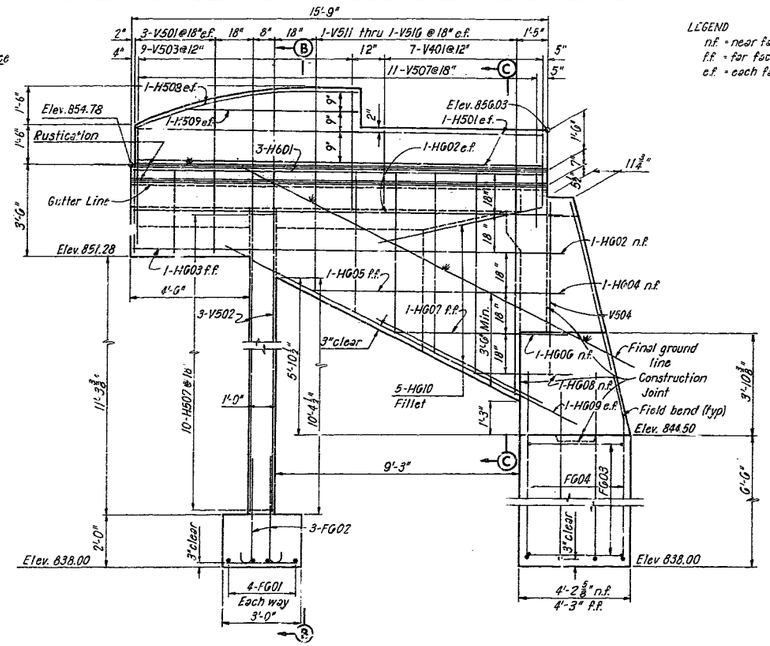

EAST WINGWALL ELEVATION

LEGEND
n.f. = near face
f.f. = far face
e.f. = each face

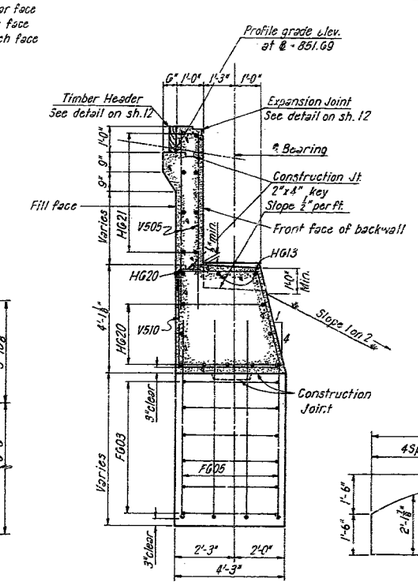

SECTION A-A

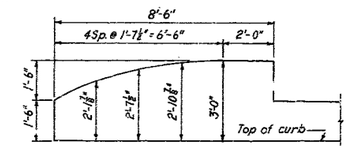

END POST ORDINATES

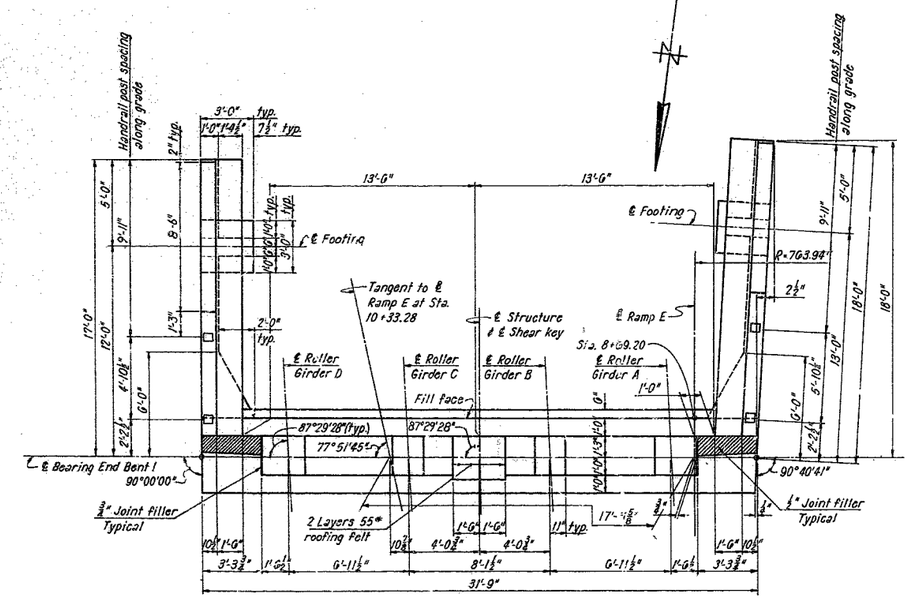

PLAN

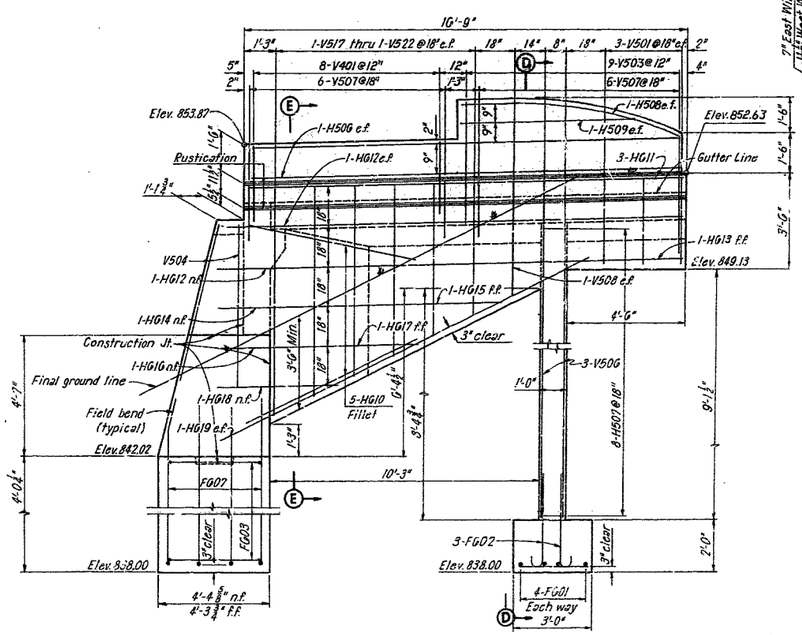

WEST WINGWALL ELEVATION

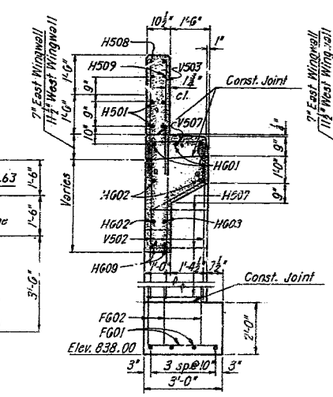

SECTION L-B
(Section D-D similar)

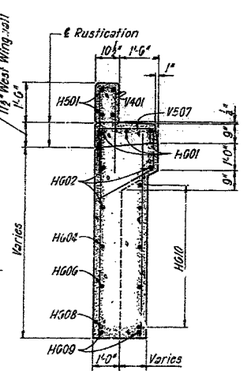

SECTION C-C
(Section E-E similar)

Note:
Dimensions to surfaces receiving joint filler are to face of concrete.
Use 2" clear on all reinforcement unless otherwise shown.

BRIDGE: RAMP "E" OVER RTE. I-70 & RAMP "F"

STATE ROAD - ROUTES I-435 & I-70 INTERCHANGE
FROM ROUTE 40 TO LEEDS ROAD
PROJECT NO. I-435-1(24)(RTE. I-435) STA. 10+33.28 (℄ RAMP "E")

JACKSON COUNTY

HOWARD, NEEDLES, TAMMEN & BERGENDOFF
CONSULTING ENGINEERS
KANSAS CITY — NEW YORK

MADE GLC DATE 1-9-62 TRACED DATE
CHECKED S.A.L. DATE 3-12-62 SCALE

NOTE: This drawing is not to scale. Follow dimensions.

DETAILS OF END BENT 1

SHEET 5 OF 13

A-990

281

NO CONSTRUCTION CHANGES

MISSOURI STATE HIGHWAY DEPARTMENT

FED. AID DIV. NO.	STATE	FEDERAL PROJECT NO. & SEC.	FISCAL YEAR	SHEET NO.	TOTAL SHEETS
5	MO			29	
DIST. NO.	COUNTY		ROUTE	SEC.	
4	JACKSON				

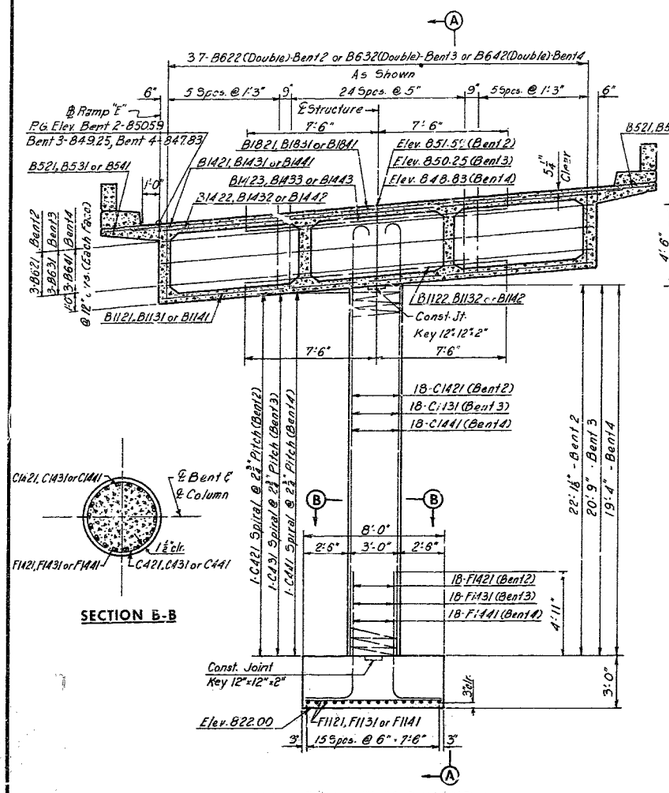

ELEVATION-BENTS 2,3 AND 4

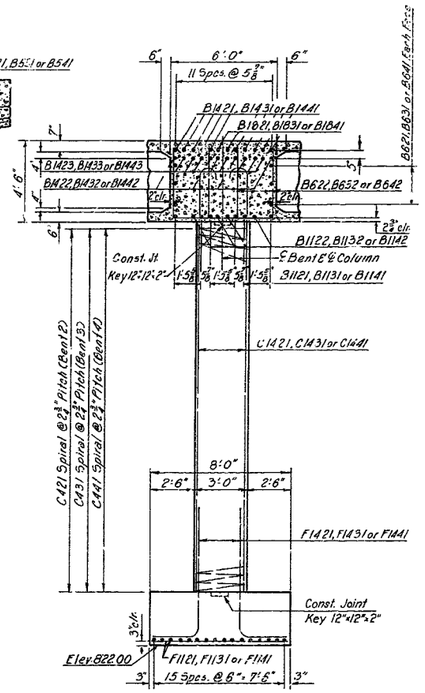

SECTION A-A

SECTION B-B

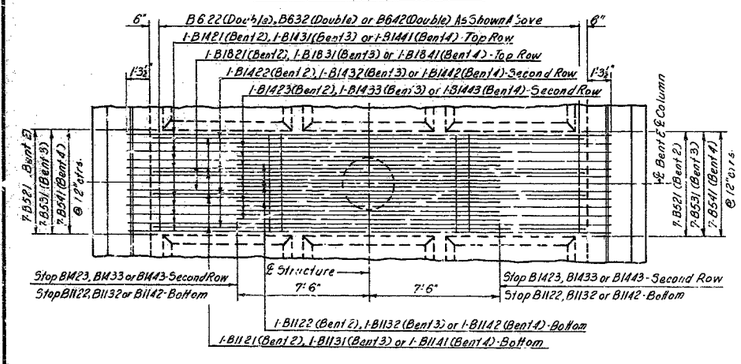

PLAN-BENTS 2,3 AND 4

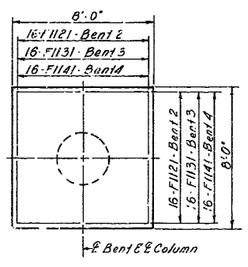

FOOTING PLAN-BENTS 2,3 AND 4

DETAILS OF INT. BENTS 2,3 AND 4

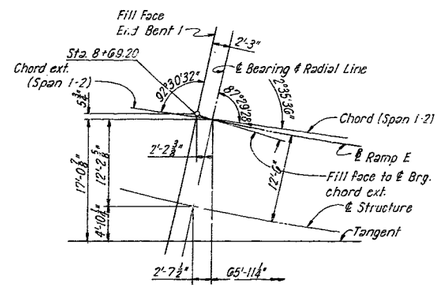

DETAIL C

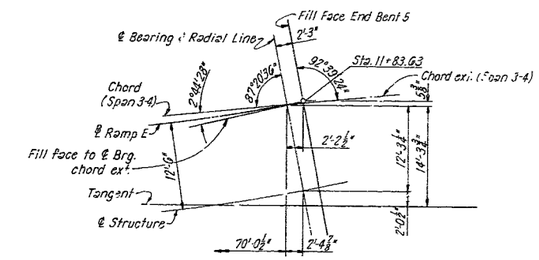

DETAIL D

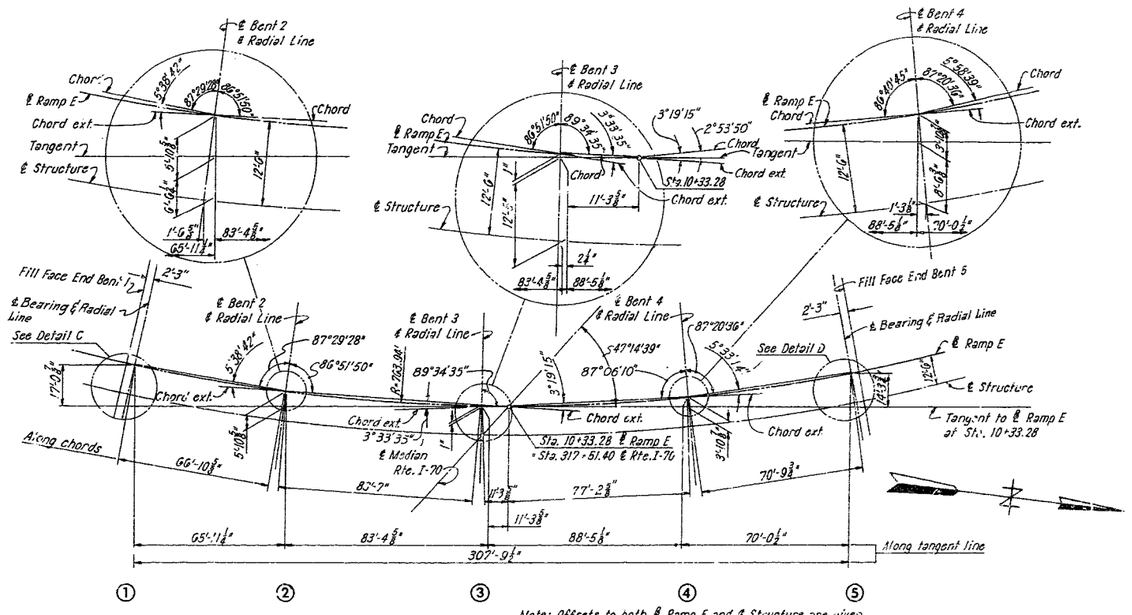

Note: Offsets to both ℄ Ramp E and ℄ Structure are given along a line perpendicular to tangent line.

LAYOUT DATA FOR SUBSTRUCTURE

BRIDGE: RAMP "E" OVER RTE. I-70 & RAMP "F"

STATE ROAD - ROUTES I-435 & I-70 INTERCHANGE
FROM ROUTE 40 TO LEEDS ROAD
PROJECT NO. I-435-1(24)(RTE. I-435) STA. 10+33.28 (℄ RAMP "E")

JACKSON COUNTY

HOWARD, NEEDLES, TAMMEN & BERGENDOFF
CONSULTING ENGINEERS
KANSAS CITY NEW YORK

MADE S.A.L. & G.L.C.	DATE 2-12-62	TRACED	DATE
CHECKED J.J.W.	DATE 3-20-62	SCALE	

NOTE: This drawing is not to scale. Follow dimensions.

SHEET 6 OF 13

A-990

282

NO CONSTRUCTION CHANGES

MISSOURI STATE HIGHWAY DEPARTMENT

FLD. ROAD CLV. NO.	STATE	FEDERAL PROJECT NO. & SEC.	FISCAL YEAR	SHEET NO.	TOTAL SHEETS
5	MO			30	
DIST. NO.		COUNTY		ROUTE	SEC.
4		JACKSON			

Note:
Dimensions with * are given at front face of backwall.

LEGEND
nf - near face
ff - far face
ef - each face

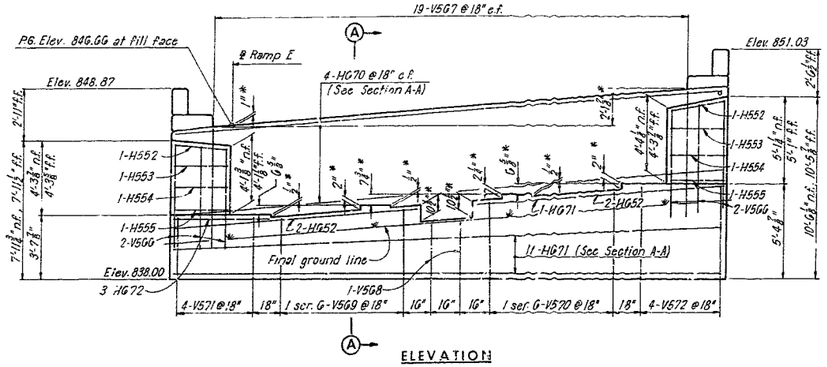

ELEVATION

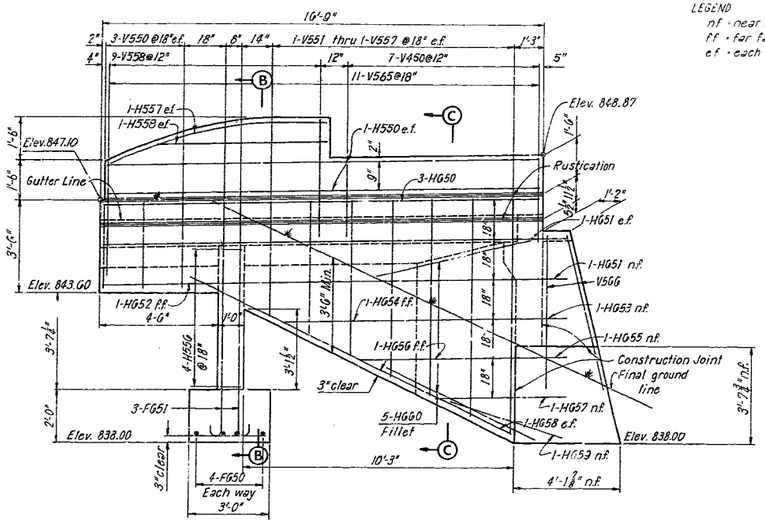

WEST WINGWALL ELEVATION

LEGEND
nf - near face
ff - far face
ef - each face

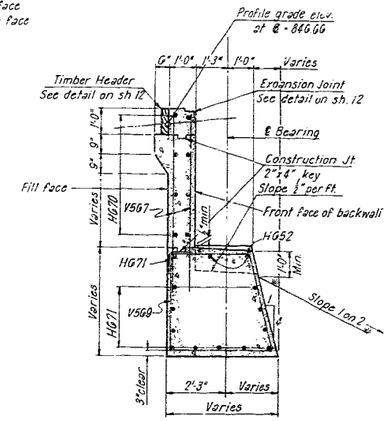

SECTION A-A

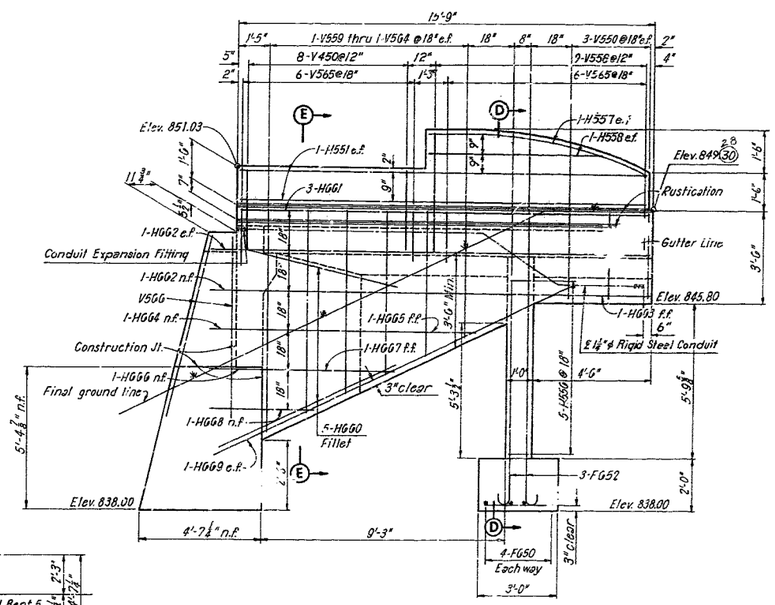

EAST WINGWALL ELEVATION

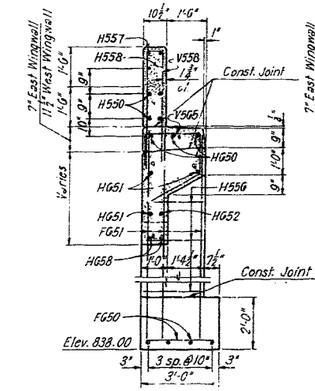

SECTION B-B

(Section D-D similar)

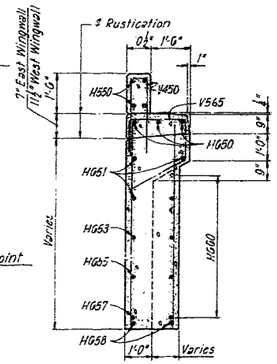

SECTION C-C

(Section E-E similar)

Note:
Dimensions to surfaces receiving joint filler are to face of concrete.
Use 2" clear on all reinforcement unless otherwise shown.
Inside faces shear key and inside face maskwalls are parallel to ℄ rollers.

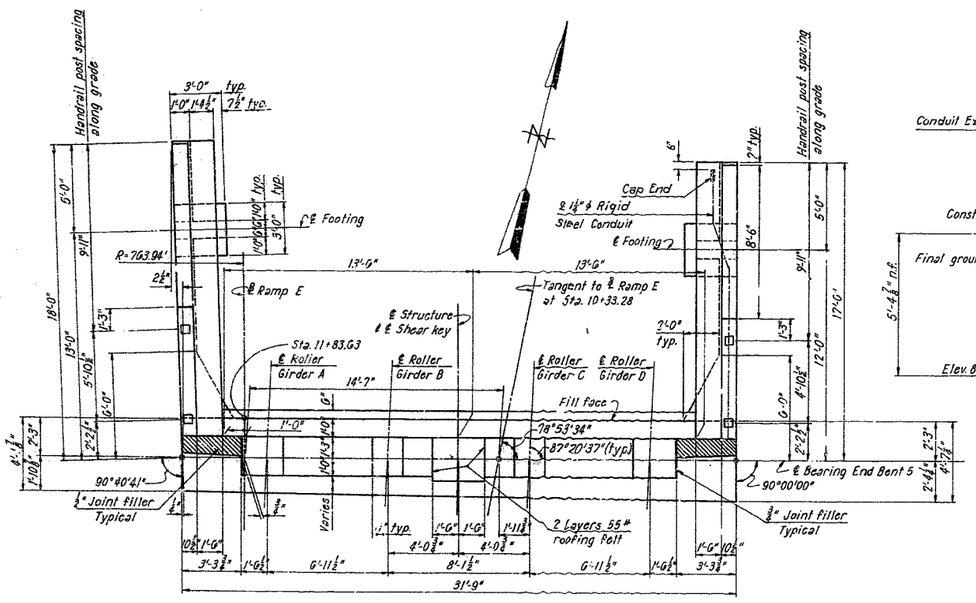

PLAN

HOWARD, NEEDLES, TAMMEN & BERGENDOFF
CONSULTING ENGINEERS
KANSAS CITY NEW YORK

MADE GLC	DATE 1-11-62	TRACED	DATE
CHECKED S.A.L.	DATE 3-12-62	SCALE	

NOTE: This drawing is not to scale. Follow dimensions.

DETAILS OF END BENT 5

SHEET 7 OF 13

BRIDGE: RAMP "E" OVER RTE. I-70 & RAMP "F"

STATE ROAD - ROUTES I-435 & I-70 INTERCHANGE
FROM ROUTE 40 TO LEEDS ROAD
PROJECT NO. I-435-1(24)(RTE. I-435) STA. 10+33.28 (℄ RAMP "E")

JACKSON COUNTY

A-990

283

NO CONSTRUCTION CHANGES

MISSOURI STATE HIGHWAY DEPARTMENT

FED. ROAD DIV. NO.	STATE	FEDERAL PROJECT NO. & SEC.	FISCAL YEAR	SHEET NO.	TOTAL SHEETS
5	MO			31	
DIST. NO.	COUNTY			ROUTE	SEC.
4	JACKSON				

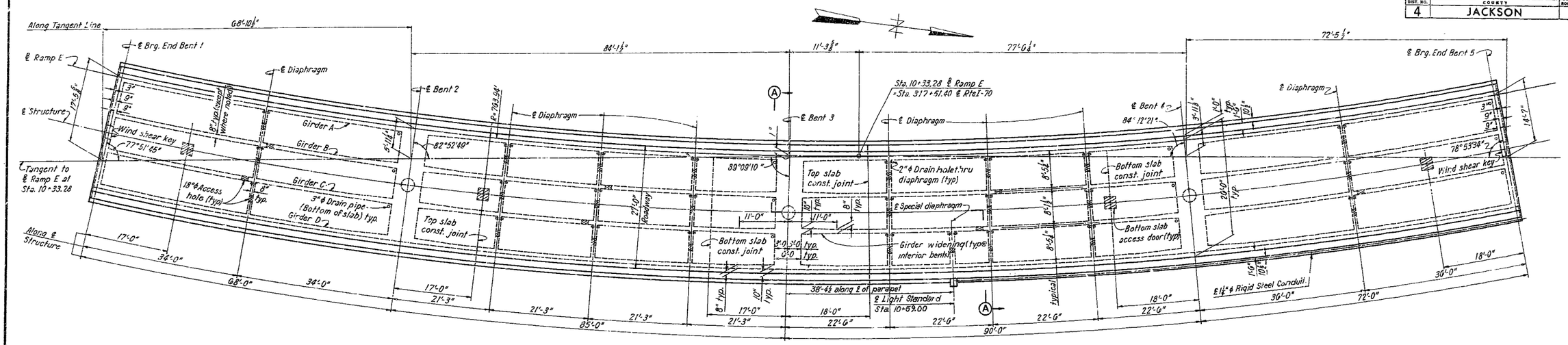

FRAMING PLAN

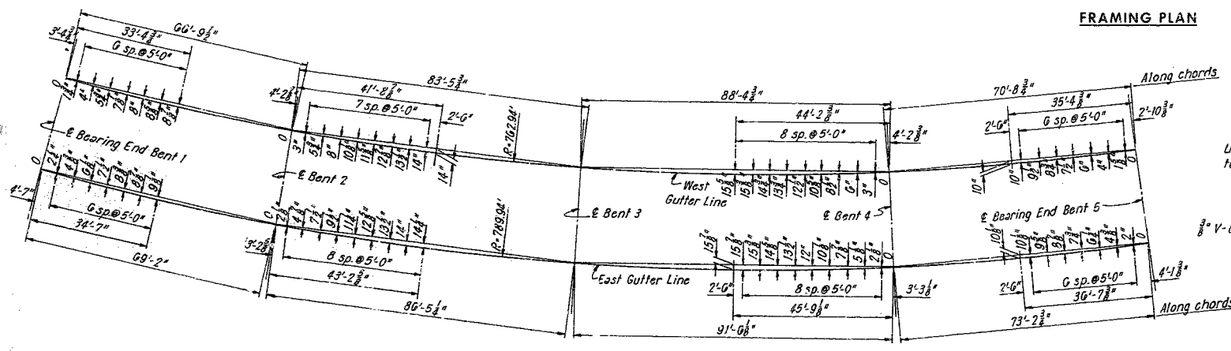

PLAN OF SLAB SHOWING ORDINATE DIMENSIONS

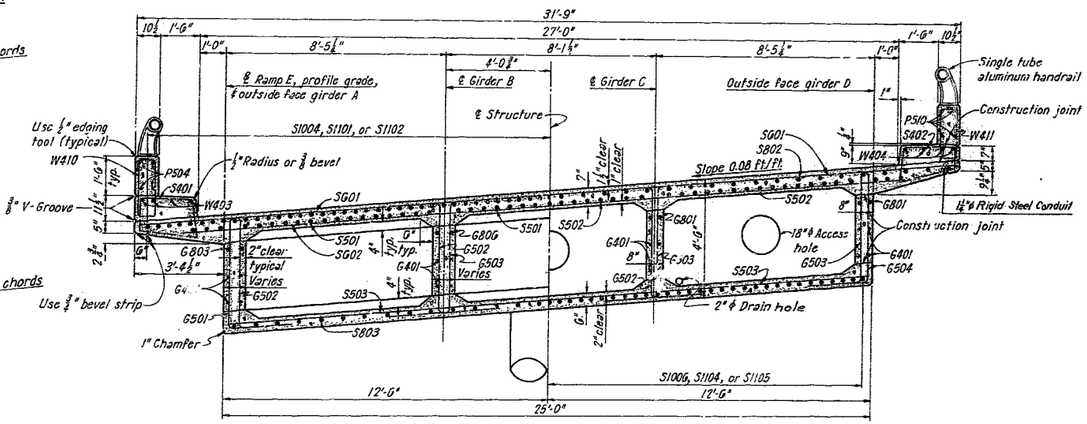

SECTION A-A

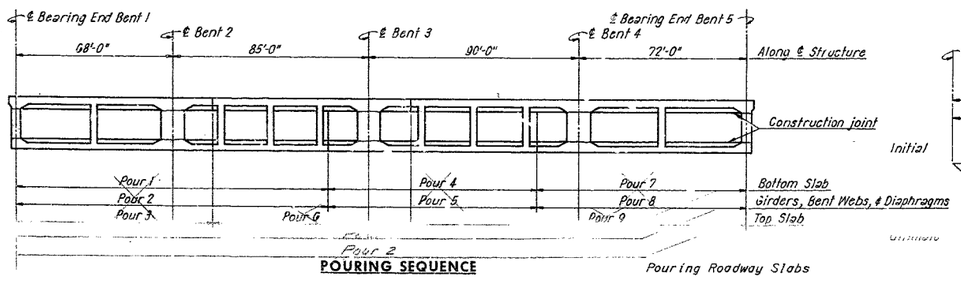

POURING SEQUENCE

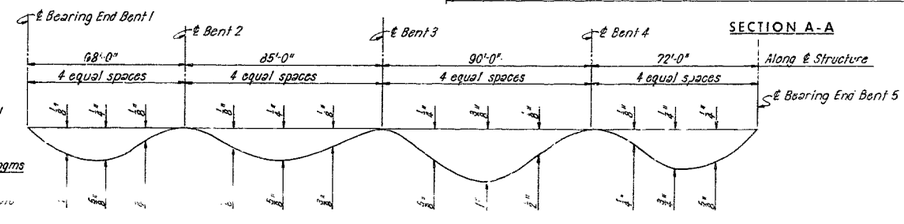

DEAD LOAD DEFLECTION DIAGRAM

Note:
All dimensions are horizontal.
All forms are to be removed from the interior of box girders except top slab forms as indicated in Section 53.4.2.4 of the Standard Specifications.
Forms shall be constructed for ultimate deflection.
All bents are on radial lines.
Construction joints are parallel to interior bents.

Pouring Roadway Slabs

No longitudinal construction joints will be permitted unless shown on plans.
The contractor shall use an approved oscillating screed type, self-propelled mechanical finisher ~~and shall observe the basic pouring sequence unless he can demonstrate to the satisfaction of the engineer that he is equipped to cur and satisfactorily finish the roadway slabs at a rate which will permit the combining of such of the basic pours as may be specifically designated by the engineer and not required for design reasons.~~
With use of forms and falsework meeting the approval of the engineer, the girder webs and diaphragms ~~may be~~ poured with the bottom slab sections on which they bear.

HOWARD, NEEDLES, TAMMEN & BERGENDOFF
CONSULTING ENGINEERS
KANSAS CITY NEW YORK

MADE GLC	DATE 1-3-62	TRACED	DATE
CHECKED CGP	DATE 3-8-62	SCALE	

NOTE: This drawing is not to scale. Follow dimensions.

SHEET 8 OF 13

BRIDGE: RAMP "E" OVER RTE. I-70 & RAMP "F"

STATE ROAD - ROUTES I-435 & I-70 INTERCHANGE
FROM ROUTE 40 TO LEEDS ROAD
PROJECT NO. I-435-1(24)(RTE. I-435) STA. 10+33.28 (℄ RAMP "E")

JACKSON COUNTY

A-990

284

MISSOURI STATE HIGHWAY DEPARTMENT

FED. ROAD DIV. NO.	STATE	FEDERAL PROJECT NO. & SEC.	FISCAL YEAR	SHEET NO.	TOTAL SHEETS
5	MO			32	
DIST. NO.	COUNTY		ROUTE	SEC.	
4	JACKSON				

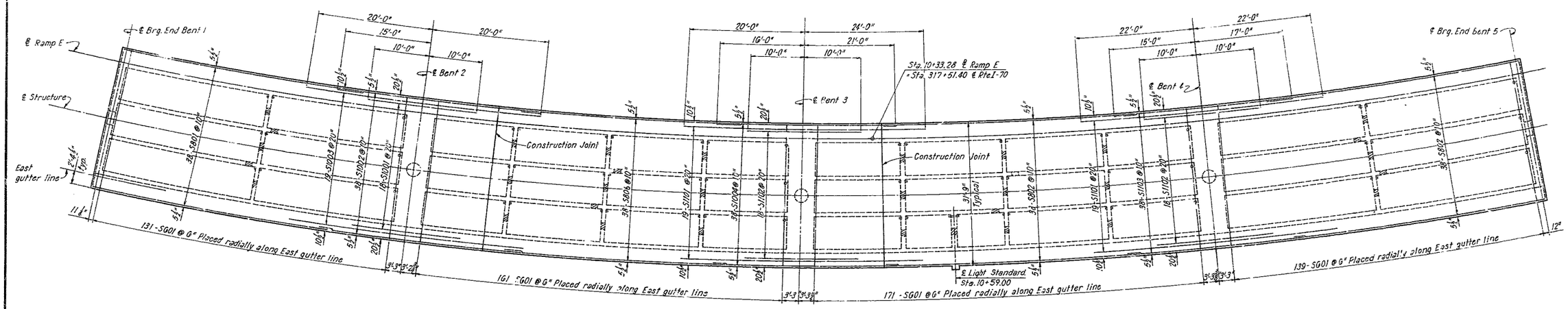

TOP OF TOP SLAB REINFORCEMENT

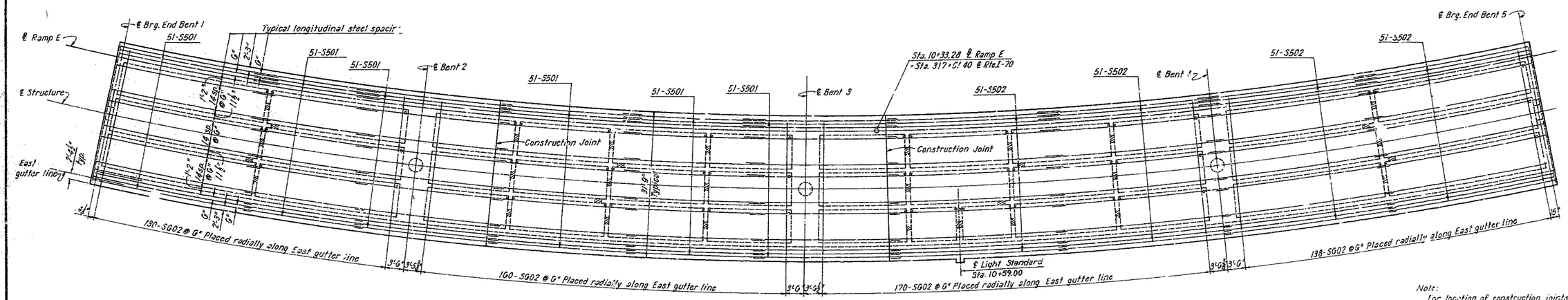

BOTTOM OF TOP SLAB REINFORCEMENT

Note:
For location of construction joints, see sheet 8.
Longitudinal reinforcing is placed parallel to ℄ girders.
All dimensions are horizontal.

BRIDGE: RAMP "E" OVER RTE. I-70 & RAMP "F"

STATE ROAD - ROUTES I-435 & I-70 INTERCHANGE
FROM ROUTE 40 TO LEEDS ROAD
PROJECT NO. I-435-1(24)(RTE. I-435) STA. 10+33.28 (℄ RAMP "E").

JACKSON COUNTY

A-990

HOWARD, NEEDLES, TAMMEN & BERGENDOFF
CONSULTING ENGINEERS
KANSAS CITY NEW YORK

MADE GLC	DATE 12-22-61	TRACED	DATE
CHECKED CGP	DATE 3-8-62	SCALE	

NOTE: This drawing is not to scale. Follow dimensions.

285

MISSOURI STATE HIGHWAY DEPARTMENT

FED. ROAD DIV. NO.	STATE	FEDERAL PROJECT NO. & SEC.	FISCAL YEAR	SHEET NO.	TOTAL SHEETS
5	MO			33	
DIST. NO.	COUNTY		ROUTE	SEC.	
4	JACKSON				

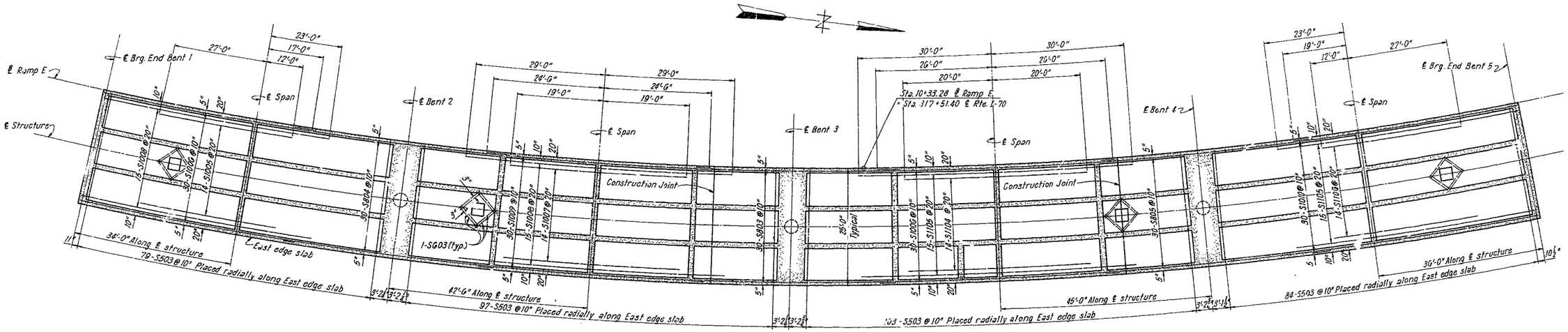

BOTTOM SLAB REINFORCEMENT

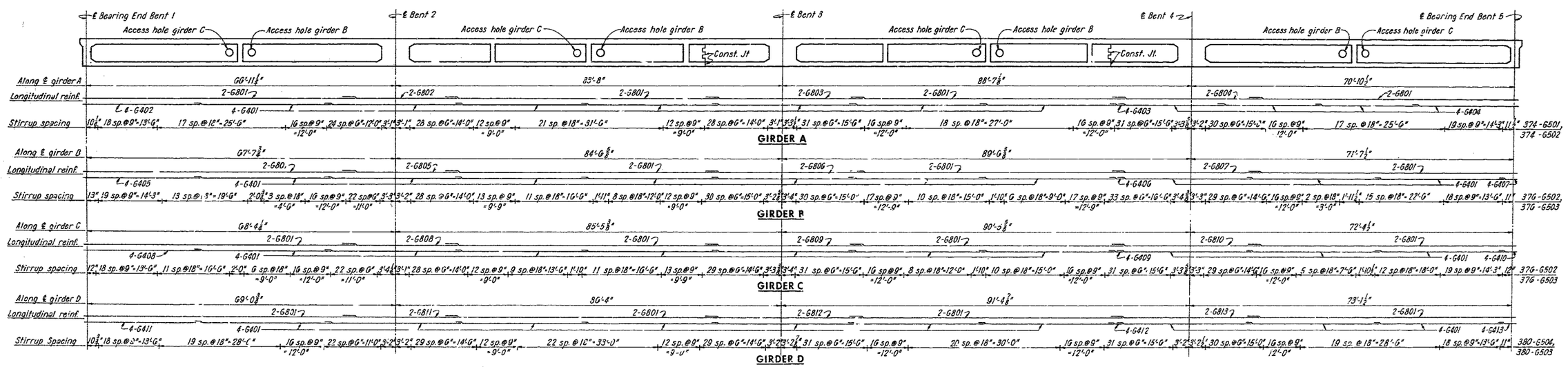

GIRDER WEB REINFORCEMENT

Note:
For location of construction joints, access holes, and access doors, see sheet 8.
Cut or bend reinforcement in field to miss access holes and access doors.
All longitudinal reinforcement is to be placed parallel to ℄ girders.
All dimensions are horizontal.
Stirrups in girders shall be adjusted in the field to clear access holes.
For girder widening see sheet 8.

HOWARD, NEEDLES, TAMMEN & BERGENDOFF
CONSULTING ENGINEERS
KANSAS CITY NEW YORK

MADE GLC DATE 12-29-61 TRACED DATE
CHECKED CGP DATE 3-8-62 SCALE

NOTE: This drawing is not to scale. Follow dimensions.

SHEET 10 OF 13

BRIDGE: RAMP "E" OVER RTE. I-70 & RAMP "F"

STATE ROAD - ROUTES I-435 & I-70 INTERCHANGE
FROM ROUTE 40 TO LEEDS ROAD
PROJECT NO. I-435-1(24)(RTE. I-435) STA. 10+33.28 (℄ RAMP "E")

JACKSON COUNTY

A-990

286

NO CONSTRUCTION CHANGES

MISSOURI STATE HIGHWAY DEPARTMENT

FED. ROAD DIV. NO.	STATE	FEDERAL PROJECT NO. & SEC.	FISCAL YEAR	SHEET NO.	TOTAL SHEETS
5	MO			34	
DIST. NO.	COUNTY		ROUTE	SEC.	
4	JACKSON				

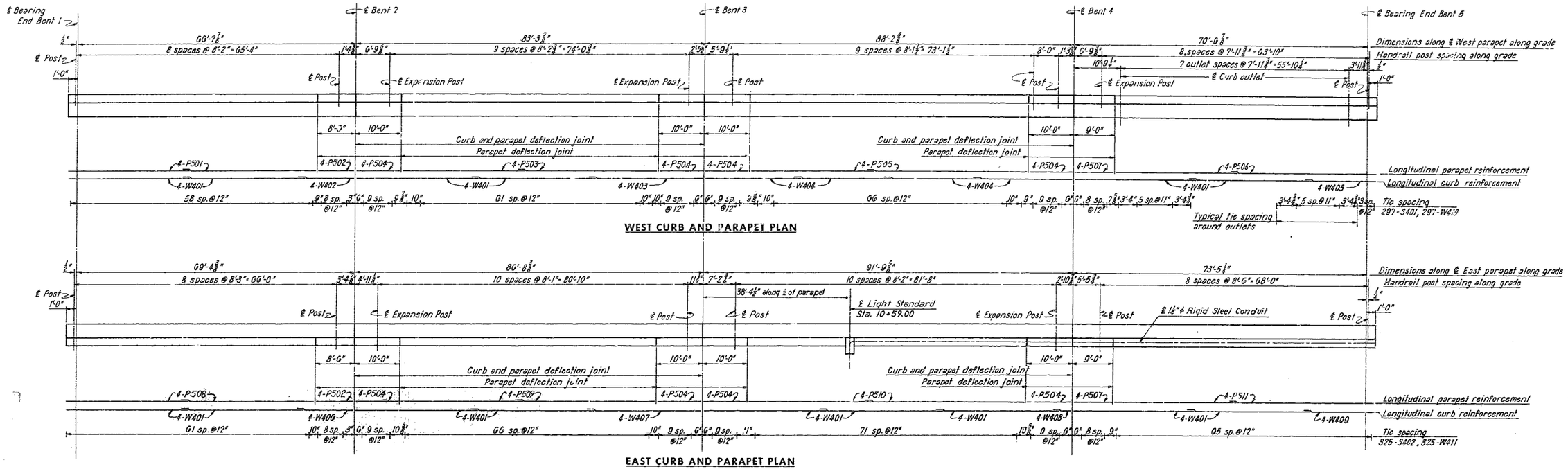

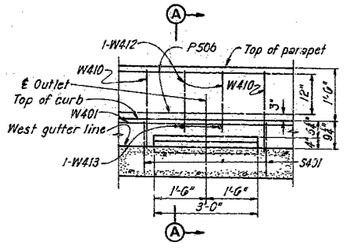

CURB OUTLET ELEVATION

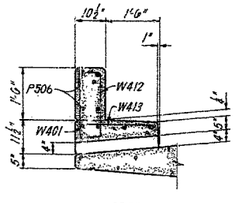

SECTION A-A

CURB OUTLET DETAILS

8 Curb outlets required

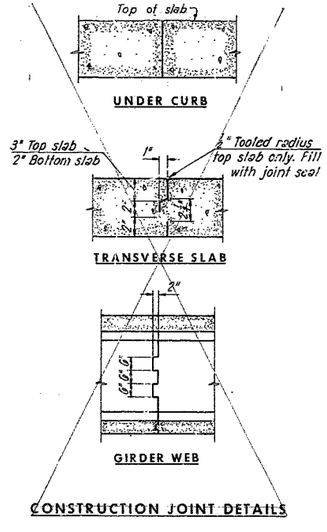

CONSTRUCTION JOINT DETAILS

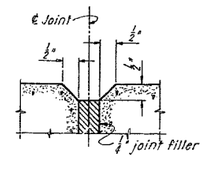

DEFLECTION JOINT DETAILS

Note: All reinforcement shall stop 2" clear of deflection joints.

Note:
For continuation of handrail post spacing on End Bents, see sheets 5 and 7.

HOWARD, NEEDLES, TAMMEN & BERGENDOFF
CONSULTING ENGINEERS
KANSAS CITY NEW YORK

MADE GLC	DATE	TRACED	DATE
CHECKED OGP	DATE 2-8-62	SCALE	

NOTE: This drawing is not to scale. Follow dimensions.

BRIDGE: RAMP "E" OVER RTE. I-70 & RAMP "F"

STATE ROAD - ROUTES I-435 & I-70 INTERCHANGE
FROM ROUTE 40 TO LEEDS ROAD
PROJECT NO. I-435-1(24)(RTE. I-435) STA. 10+33.28 (℄ RAMP "E")

JACKSON COUNTY

SHEET 11 OF 13

A-990

CONSTRUCTION [illegible] NOTES NOTED HERE.

287

MISSOURI STATE HIGHWAY DEPARTMENT

FED. ROAD DIV. NO.	STATE	FEDERAL PROJECT NO. & SEC.	TOTAL SHEETS	SHEET NO.	TOTAL SHEETS
5	MO			35	
DIST. NO.	COUNTY		ROUTE	SEC.	
4					

Note:

~~Approved stud welded anchors may be used in lieu of #5 bars shown.~~

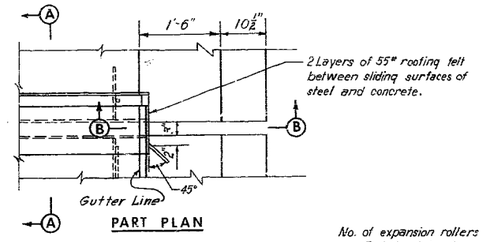

PART PLAN

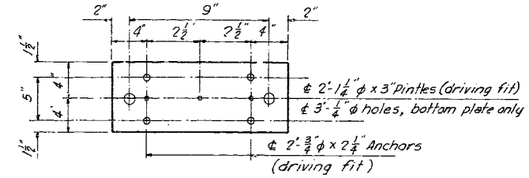

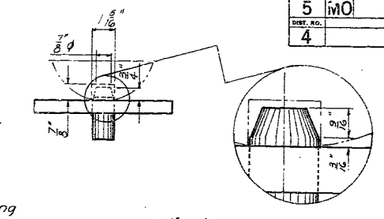

No. of expansion rollers required.
End bent 1 = 4
End bent 5 = 4

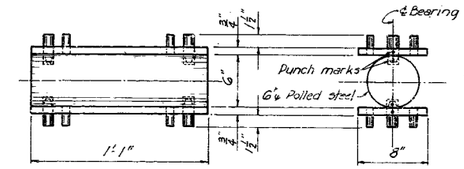

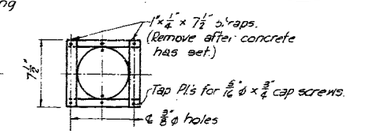

Note:
Top and bottom plates to be U55 T-1 Alloy or equivalent. Materials for pintles and rollers shall be cold finished carbon steel A151-C1042 or C1045 (turned and polished).
All ring plates shall be straightened to plane surfaces.
E 6015 or E 6016 welding electrodes shall be used.
Paint: Shop: One coat red lead except top surface of top plate and bottom surface of bottom plate.
Field: All exposed surfaces first coat brown, second coat aluminum.

EXPANSION ROLLER

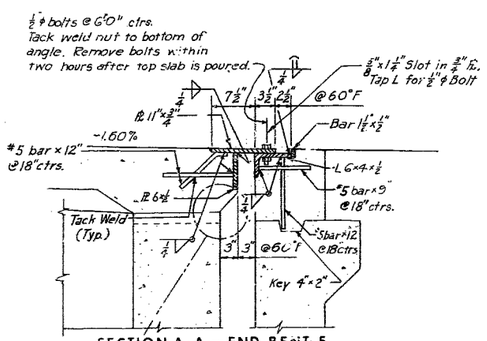

SECTION A-A — END BENT 5
(End Bent 1 Similar)

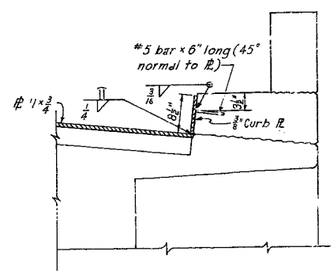

SECTION B-B

Note: #5 bars used as Expansion Joint anchors to be structural grade steel.

~~Note: Backwall to be poured and forms to be removed prior to pouring of top slab of box girder.~~

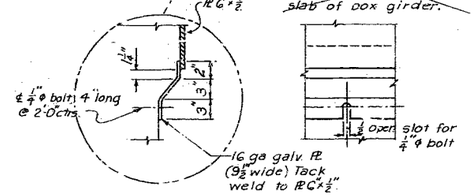

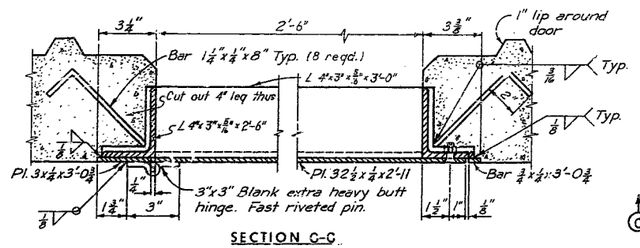

SECTION C-C

Note:
Access Doors to be assembled and in place while slab is being poured.
Bottom surface of door to be flush with bottom of slab.

Payment for furnishing and placing access doors and frames shall be made and considered fully covered under price bid for Fabricated Structural Carbon Steel.

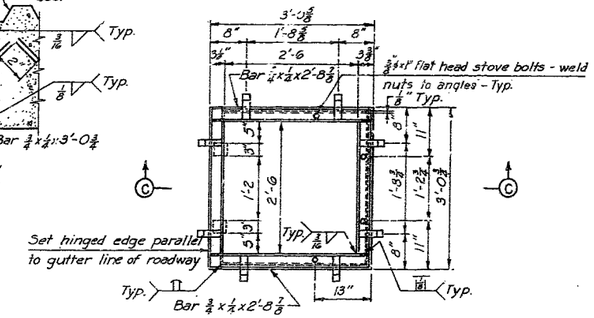

PLAN

BOTTOM SLAB ACCESS DOOR DETAILS

No. of doors required (4)
Note: Weight of one door and frame is approximately 181 lbs.

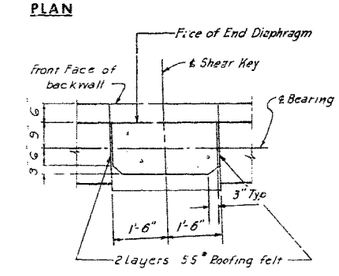

SHEAR KEY DETAIL

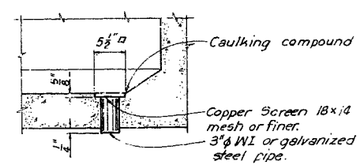

Note:
If galvanized steel pipe is used, the screen shall be aluminum.
Cost of furnishing and placing pipe, screen, and caulking compound shall be included in price bid for other items of work.

BOTTOM SLAB DRAIN

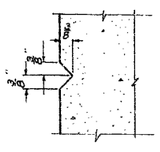

RUSTICATION DETAIL

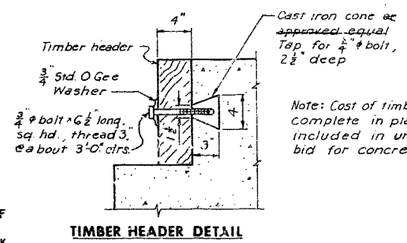

Note: Cost of timber headers, complete in place, to be included in unit price bid for concrete.

TIMBER HEADER DETAIL

HOWARD, NEEDLES, TAMMEN & BERGENDOFF
CONSULTING ENGINEERS
KANSAS CITY NEW YORK

MADE JLW	DATE 11-25-61	TRACED	DATE
CHECKED L.J.R	DATE 1-2-62	SCALE	

NOTE: This drawing is not to scale. Follow dimensions.

SHEET 12 OF 13

BRIDGE: RAMP "E" OVER RTE. I-70 & RAMP "F"

STATE ROAD - ROUTES I-435 & I-70 INTERCHANGE
FROM ROUTE 40 TO LEEDS ROAD
PROJECT NO. I-435-1(24)(RTE. I-435) STA. 10+33.28 (℞ RAMP "E")

JACKSON COUNTY

A-990

288

MISSOURI STATE HIGHWAY DEPARTMENT

FED. ROAD DIV. NO.	STATE	FEDERAL PROJECT NO.	FISCAL YEAR	SHEET NO.	TOTAL SHEETS
5	MO				36
DIST. NO.	COUNTY		ROUTE	SEC.	
4	JACKSON				

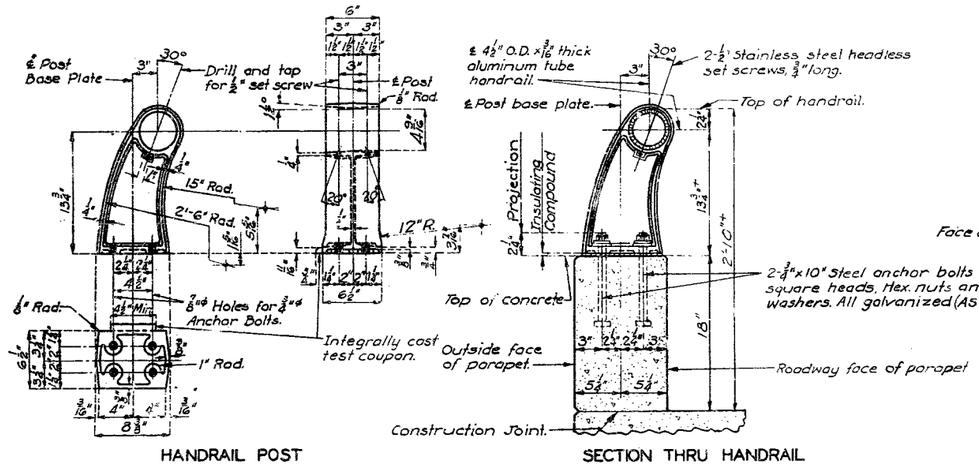

HANDRAIL POST

SECTION THRU HANDRAIL

SINGLE TUBE ALUMINUM RAILING

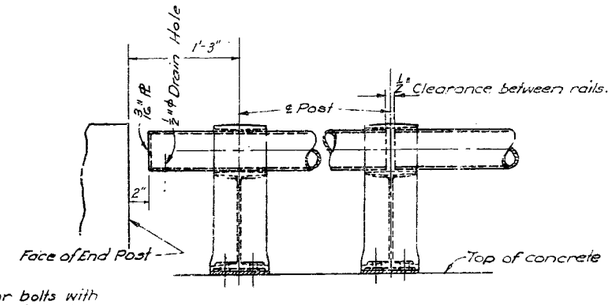

POST

RAIL SPLICE OR EXP.

TYPICAL HANDRAIL DETAILS

Note: All handrail posts shall be set normal to grade.

Aluminum tube handrail shall be bent to conform to vertical and horizontal alignment of parapet.

Aluminum washer shims between top of parapet and post base may be used for adjusting handrail alignment. Maximum thickness of shims to be ⅛". Where more fitting of post is required for proper alignment, concrete bearing areas shall be ground down.

All parts of handrail, except anchor bolts, nuts, washers, and set screws are to be of aluminum material.

The contract unit price per linear foot of "Bridge Rail (Single Tube Type)" shall include furnishing and erecting the handrail complete with anchor bolts, shims and Insulating Compound.

All fillets ¼" except as noted.

All draft 3° except as noted.

Pipe rail to be fabricated in two or three panel lengths unless otherwise approved.

Omit set screw on side near filled joint in parapet at all expansion posts.

Top of curbs and parapets to be built parallel to grade. Vertical faces of end posts to be vertical.

All exposed edges of end posts and parapets to be beveled ½".

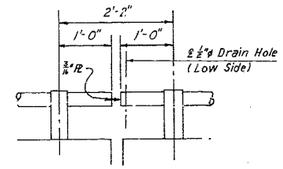

AT EXPANSION JOINT

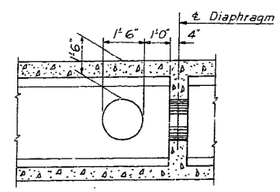

GIRDER WEB ACCESS HOLE

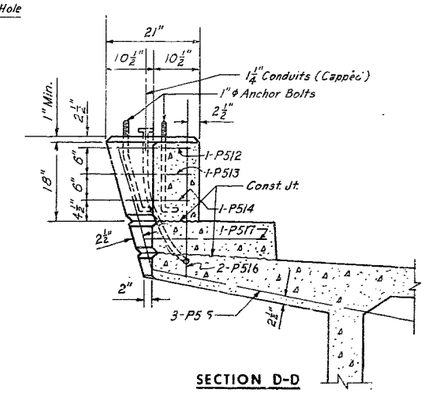

SECTION D-D

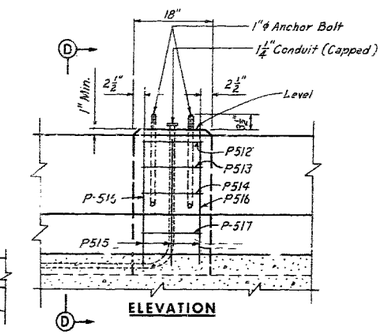

ELEVATION

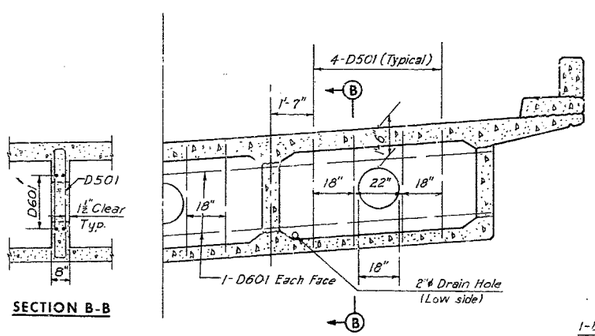

SECTION B-B

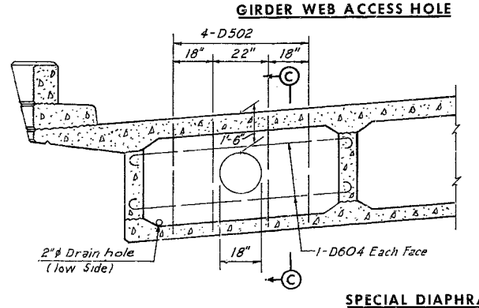

SPECIAL DIAPHRAGM

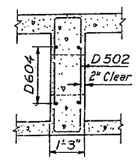

SECTION C-C

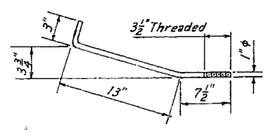

2 of each type required

ANCHOR BOLTS

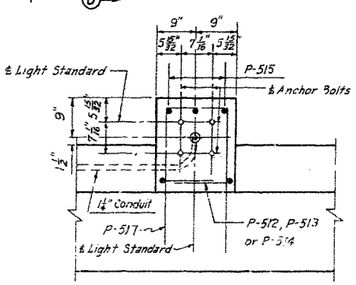

PLAN

Note:
Bolts shall be furnished complete with 2 Standard Hex. Nuts and Washers, all galvanized. Payment for furnishing and installing bolts shall be included in price bid for other items.

DETAILS OF LIGHT STANDARD SUPPORT

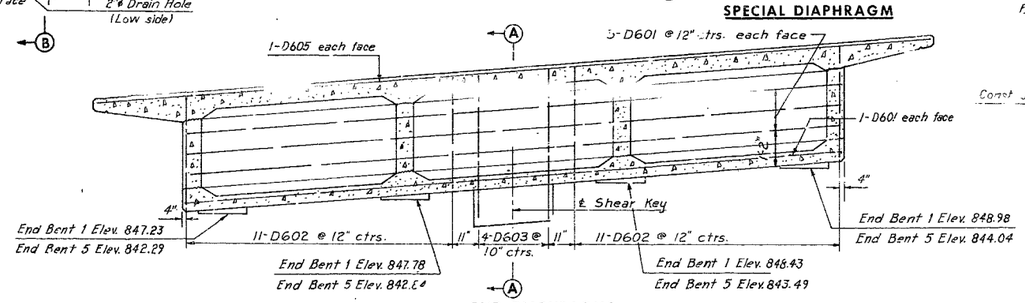

END DIAPHRAGMS

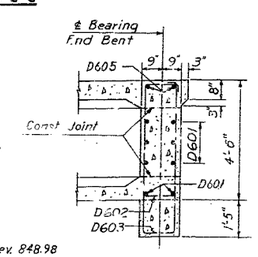

SECTION A-A

BRIDGE: RAMP "E" OVER RTE. I-70 & RAMP "F"

STATE ROAD - ROUTES I-435 & I-70 INTERCHANGE
FROM ROUTE 40 TO LEEDS ROAD
PROJECT NO. I-435-1(24)(RTE. I-435) STA. 10+33.28 (℄ RAMP "E")

JACKSON COUNTY

HOWARD, NEEDLES, TAMMEN & BERGENDOFF
CONSULTING ENGINEERS
KANSAS CITY NEW YORK

MADE	J.L.W.	DATE 2-20-62	TRACED	DATE	
CHECKED	L.J.R.	DATE 2-21-62	SCALE		

NOTE: This drawing is not to scale. Follow dimensions.

SHEET 13 OF 13

A-990

289

MISSOURI STATE HIGHWAY DEPARTMENT

FED. ROAD DIV. NO.	STATE	FEDERAL PROJECT NO. & SEC.	FISCAL YEAR	SHEET NO.	TOTAL SHEETS
5	MO.	I-435-1(24)18		24	
DIST. NO.		COUNTY		ROUTE	ETC.
4		JACKSON		I-435	

FINAL PLANS

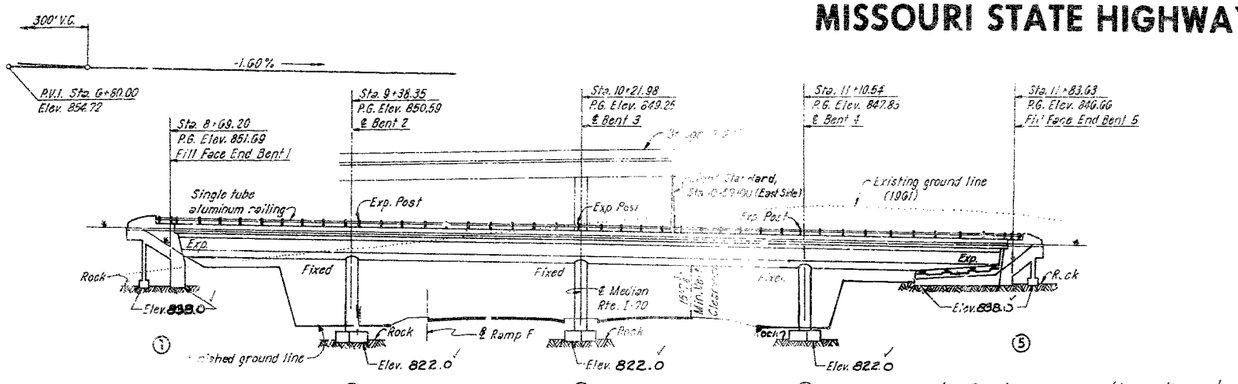

68', 85', 90', 72' CONTINUOUS CONCRETE BOX GIRDER SPANS

ELEVATION

Note: Roadway excavation adjacent to this site was completed before substructure was started. See Special Provisions.

Note:
All dimensions shown are horizontal.
See sheet G for substructure layout data.
Bents were not located from the reference point on the tangent by conventional survey methods based on 100' chords.

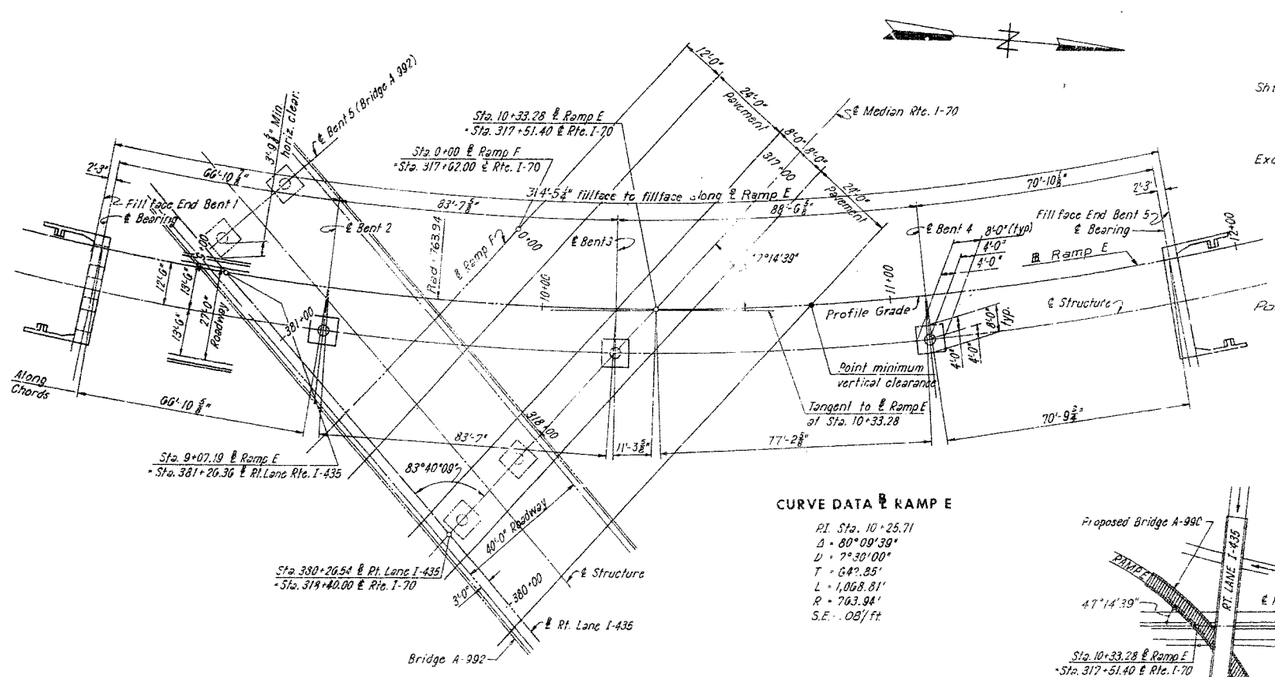

PLAN

NOTE: This drawing is not to scale. Follow dimensions.

HOWARD, NEEDLES, TAMMEN & BERGENDOFF
CONSULTING ENGINEERS
KANSAS CITY NEW YORK

MADE GLC	DATE 1-30-62	TRACED	DATE
CHECKED J.L.W.	DATE 3-13-62	SCALE	

CURVE DATA ℄ RAMP E

P.I. Sta. 10+25.71
Δ = 80°09'39"
D = 7°30'00"
T = 642.85'
L = 1,068.81'
R = 763.94'
S.E. .08/ft

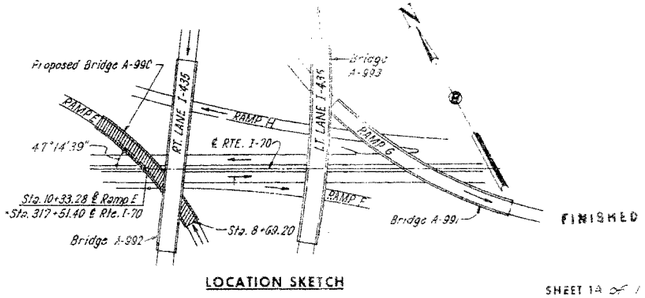

FINISHED

LOCATION SKETCH

SHEET 1A of 1

GENERAL NOTES

Design Specifications

A.A.S.H.O. 1961.

Design Loading

H20-S16-44 with 15#/sq.ft. future wearing surface.

Concrete

Concrete Stress - Class B1 fc = 1,600 p.s.i.
Class B fc = 1,200 p.s.i.
Concrete for superstructure was Class B1 air-entrained. Concrete for substructure was Class B air-entrained.

Reinforcing Steel

Allowable stress 20,000 p.s.i. All splices in reinforcing steel were 32 bar diameters.
Bar sizes are designated on the plans by numbers. The first digit after the letter in three digit marks and the first two digits after the letter in four digit marks indicate the size of bar.
Dimensions shown on the plans from the reinforcing steel to outside edge of concrete are all clear dimensions.
All bending dimensions are from "out to out" of bars.

Joint Filler

Where joint filler is specified on the plans it did conform with the requirements for gray sponge rubber compound joints as given in Section 157.2.4 of the Standard Specifications.

Metal Conduits

Expansion fittings were required in steel conduit at all expansion joints. Expansion fittings O. Z. Electrical Manufacturing Company Type AX-125 with AJ bonding jumper or equal.

Sealing of Decks

Superstructure deck was surface sealed.
See Special Provisions.

Utilities

All utilities, unless shown otherwise, were removed or relocated by others. The Contractor did notify the owner of the utilities of his work schedule sufficiently in advance to allow time for the disposition of utilities.

Shoring

Permits were obtained for all truck loads over legal length.

Excavation to Rock

All loose, shelly or disintegrated rock was removed and footings placed on hard, solid, undisturbed rock. If soft rock or shale is encountered, the footings were [illegible] least 18" into and cast against [illegible] same. In no case were the footings [illegible] higher than elevations shown [illegible] per sq.ft. was used in design [illegible]

Painting

[illegible] Shop [illegible] field, three coats of red [illegible] after erection. All other [illegible] as [illegible] beams [illegible] coat each, third coat aluminum [illegible] finish. The access doors and [illegible] for paint, cleaning [illegible] included in the unit price [illegible] Structural Carbon Steel.

QUANTITIES				
ITEM	UNIT	SUBSTR.	SUPERSTR.	TOTAL
Class 1 Excavation for Structures	Cu. Yd.	177.5		177.5
Class B Concrete	Cu. Yd.	119.1		119.1
Class B1 Concrete	Cu. Yd.		655.6	655.6
Fabricated Structural Carbon Steel	Lbs.		5300	5300
Reinforcing Steel	Lbs.	16,200	287,580	303,780
Bridge Rail (Single Tube Type)	Lin. Ft.		665	665
Conduit System (On Structure)	L.S.		1	1
CONTINGENT ITEM				
Test holes	Lin. Ft.	71		71

Quantity Notes

Class 1 Excavation for Structures was measured from the existing ground line or from the lower limits of roadway excavation, whichever is lower, regardless of the sequence of operations or method of removal.

All excavation for bridge was paid for as Class 1 Excavation for Structures.

All concrete and reinforcement at intermediate bents above top of footing are included in superstructure quantities. Estimated quantity of Class B concrete substructure includes all concrete in end bents and intermediate bent footings. All other concrete is included in estimated quantity of Class B1 concrete.
Weight of bearings is included in weight of Fabricated Structural Carbon Steel.

B.M. 854.76 ◻ Top curb on S.E. wingwall.

SUBMITTED BY [illegible] FINISHED
REGISTERED PROFESSIONAL ENGINEER
MISSOURI NO. E-253

BRIDGE: RAMP "E" OVER RTE. I-70 & RAMP "F"

STATE ROAD - ROUTES I-435 & I-70 INTERCHANGE
FROM ROUTE 40 TO LEEDS ROAD
PROJECT NO. I-435-1(24)(RTE. I-435) STA. 10+33.28 (℄ RAMP "E")

JACKSON COUNTY

SUBMITTED BY [illegible] DATE [illegible] FINISHED
BRIDGE ENGINEER
APPROVED BY [illegible] DATE [illegible]
CHIEF ENGINEER

STD. 54.00
A-990

290

FINAL PLANS

MISSOURI STATE HIGHWAY DEPARTMENT

FED. ROAD DIST. NO.	STATE	FED. AID PROJ. NO.	FISCAL YEAR	SHEET NO.	TOTAL SHEETS
5	MO.		19		

(9)

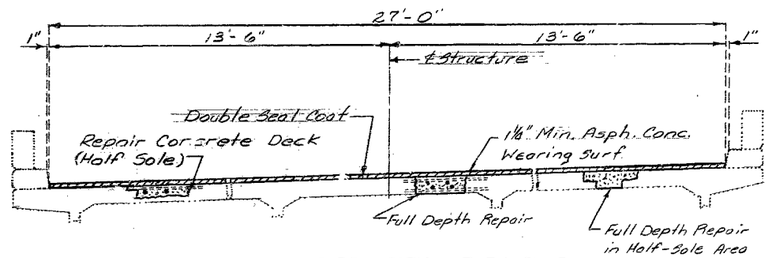

PART SECTION THRU SLAB

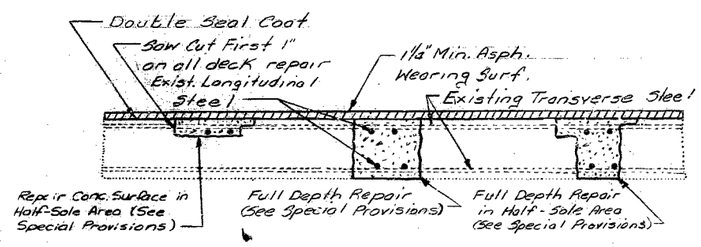

REPAIR AREAS

Note: Outline of old work is indicated by light dotted lines. Heavy lines indicate new work.

ESTIMATED QUANTITIES		TOTAL
Repair Conc. Deck (Half-Soling)	Sq. Ft.	428
Full Depth Repair	Sq. Ft.	171
Bituminous Material (Seal Coat) (Asph. Conc.)	Gal.	475
Asph. Cement 60-70 or AC-20	Ton	3.3
Mineral Aggr. (Asph. Conc.) (Type A Mix)	Ton	62
Cover Aggr. (Grade 3)	Ton	23.8
Preformed Compression Expansion Jt. Seal (4.0 In.)	Lin. Ft.	54
△1 (4.0) In.		

BRIDGE: RAMP "E" OVER RTE. I-70 & RAMP "F"

JOB NO. 4-I-435-514

△1 Revised: 6-8-83

PROJ. NO. IR-435-1(165)

Sheet No 1 of 4

JACKSON COUNTY

A-990R

B.M.

BRIDGE

STATE ROAD

ABOUT

PROJECT NO. IR-435-1(165) **STA.**

JOB NO. 4-I-435-514 **RTE** I-435

JACKSON **COUNTY**

DATE

STD.
STD.
A-990R

DESIGNED 19

DETAILED 19

CHECKED 19

Note: This drawing is not to scale. Follow dimensions.

Sheet No. 1 **of** 4

80

MISSOURI STATE HIGHWAY DEPARTMENT

FED. ROAD DIST. NO.	STATE	FED. AID PROJ. NO.	FISCAL YEAR	SHEET NO.	TOTAL SHEETS
5	MO.		19		

(10)

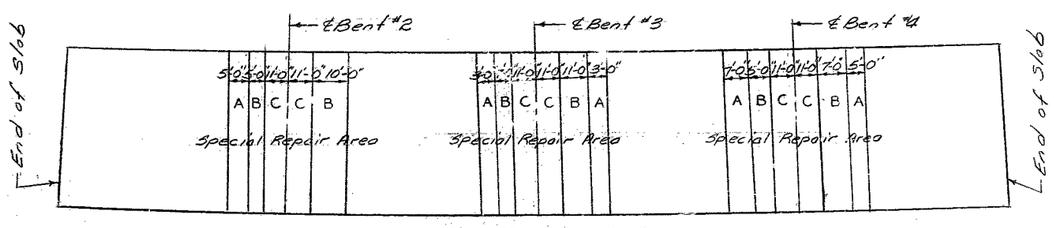

PLAN OF EXISTING SLAB

Note: Any concrete removal for half-sole or full depth repair in areas designated "A" "B" & "C" shall be repaired in alphabetical order. (See Special Provisions)

Sheet No. 2 of 4 JACKSON COUNTY A-990R

B.M.

BRIDGE

STATE ROAD

ABOUT

PROJECT NO. IR-435-1(163) **STA.**

JOB NO. 4-I-435-514 **RTE.** I-435

JACKSON **COUNTY**

DATE

STD.	
STD.	
A-990R	

DESIGNED 19

DETAILED 19

CHECKED 19

Note: This drawing is not to scale. Follow dimensions.

Sheet No. 2 *of* 4

8

MISSOURI STATE HIGHWAY DEPARTMENT

ROAD DIST. NO.	STATE	FED. AID PROJ. NO.	FISCAL YEAR	SHEET NO.	TOTAL SHEETS
5	MO.		19		

(11)

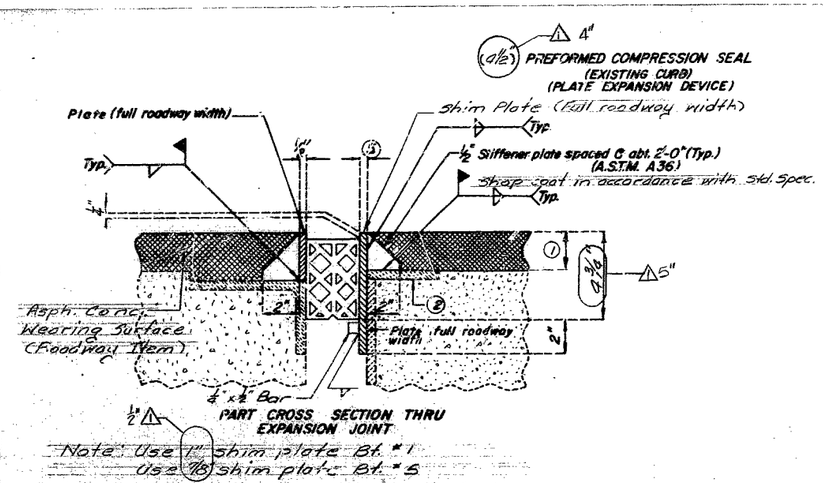

Note: Use 1" shim plate Bt. #1
Use ⅞" shim plate Bt. #5

1. 1½" Asphalt Concrete Wearing Surface.
2. Cut and smooth existing expansion device plate flush with existing expansion gap.
3. Curb plate (A.S.T.M. A36) shall be galvanized in accordance with A.S.T.M. A123 and A.S.T.M. A153.
4. Concrete anchors shall be the cone expansion type for hot-dip galvanized bolts or Cast-In-Place Conc. Anchors.
5. If Plate thickness is less than a ¼" then a ½" wide plate shall be used with the height measured from top of existing expansion device plate to top of wearing surface.

For location of 3 and 4 see sh. No. 4

TABLE OF TRANSVERSE SEAL TOLERANCES
(INCHES)

TYPE	"A" (WIDTH)	"B" (HEIGHT)	"C" (SHELL)	"D" (WEBS)	"E"(B3 ONLY) (SMALL WEBS)	
A1 OR B3	2.500 +.250 −.000	2.750 +.125 −.125	0.187 +.046 −.015	0.093 +.031 −.015	0.062 +.031 −.031	
A1 OR B3	3.000 +.250 −.000	3.408 +.187 −.187	0.187 +.046 −.015	0.125 +.046 −.015	0.075 +.046 −.031	
A1 OR B3	3.500 +.250 −.000	3.500 +.187 −.187	0.187 +.046 −.015	0.125 +.046 −.015	0.097 +.046 −.031	
A1 OR B3	4.000 +.312 −.000	4.718 +.250 −.250	A1: 0.250 +.046 −.031; B3: 0.235 +.046 −.031	0.187 +.046 −.015	0.111 +.046 −.031	Bt. #4 & #5 △1
A1 OR B3	4.500 +.312 −.000	4.500 +.250 −.250	0.250 +.046 −.031	0.187 +.046 −.015	0.111 +.046 −.031	Bt. #4 & #5 △1 Omit

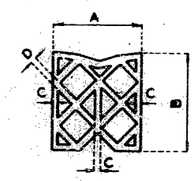

TYPE A1

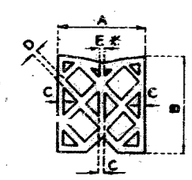

TYPE B3

* OPTIONAL "C"

△1 Revised 6-8-83

Note: Plan dimensions are based on right angles.
See Special Provisions for requirements of the compression seal.
Sheet No. 3 of 4

JACKSON COUNTY A-990R

B.M.

BRIDGE

STATE ROAD

ABOUT

PROJECT NO. IR-435-1(115) STA.

JOB NO. 4-I-435-514 RTE. I-435

JACKSON COUNTY

DATE

STD.
STD.
A-990R

DESIGNED 19
DETAILED 19
CHECKED 19

Note: This drawing is not to scale. Follow dimensions.

Sheet No. 3 of 4

28

MISSOURI STATE HIGHWAY DEPARTMENT

FED. ROAD DIST. NO.	STATE	FED. AID PROJ. NO.	FISCAL YEAR	SHEET NO.	TOTAL SHEETS
5	MO.		19		

Note: For ① ③ and ② see sh No. 3

(12)

Compression seal and Plates shall be bent to conform to new crown and grade of roadway.
2-layers of 50# roofing felt shall be placed between curb plate and recess in curb.

See Special Provisions for modification of expansion device and installation of seal and curb plates.

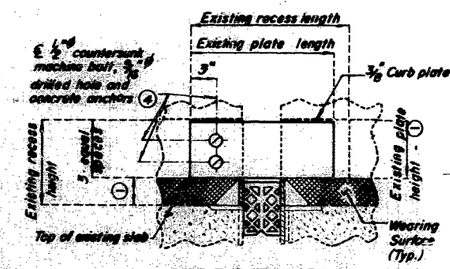

PART ELEVATION OF CURB

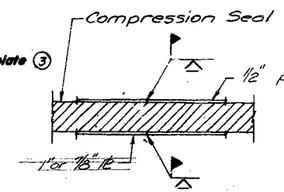

DETAIL OF WELDED SPLICE

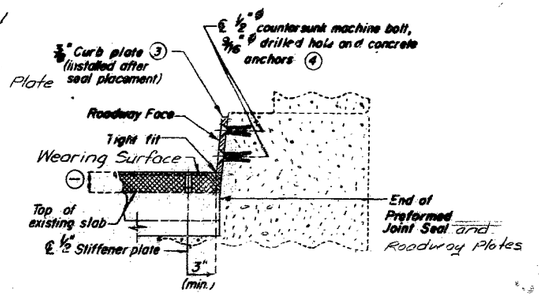

PART SECTION THRU EXP. GAP

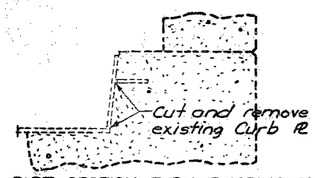

PART SECTION THRU EXISTING CURB

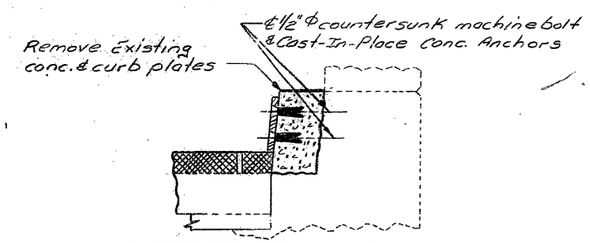

PART SECTION THRU EXP. GAP
(OPTIONAL)
SEE SPECIAL PROVISIONS

JACKSON COUNTY A-990R

Sheet No. 4 of 4

B.M.

BRIDGE

STATE ROAD

ABOUT

PROJECT NO. IR-435-1(163) **STA.**

JOB NO. 4-I-435-514 **RTE.** I-435

JACKSON **COUNTY**

DATE

STD.
STD.
A-990R

DESIGNED 19
DETAILED 19
CHECKED 19

Note: This drawing is not to scale. Follow dimensions.

Sheet No. 4 of 4

B3

MISSOURI STATE HIGHWAY DEPARTMENT

FED. ROAD DIV. NO.	STATE	FED. AID PROJ. NO.	FISCAL YEAR	SHEET NO.	TOTAL SHEETS
5	MO.		19	15	

FINAL PLANS

(9)

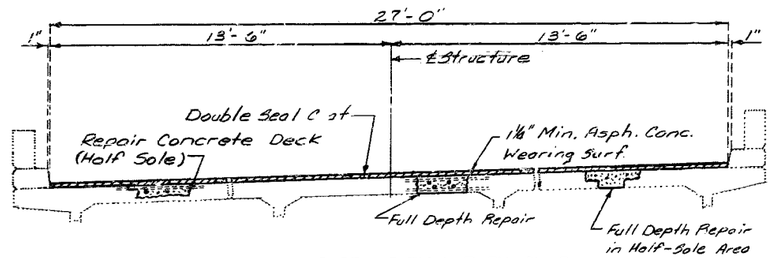

PART SECTION THRU SLAB

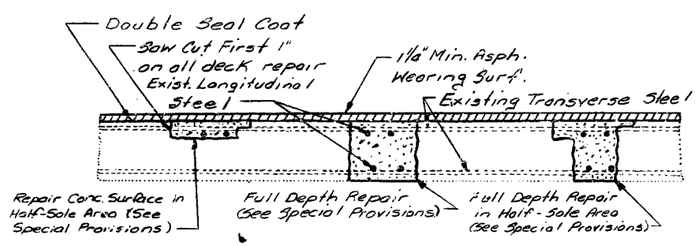

REPAIR AREAS

Note: Outline of old work is indicated by light dotted lines. Heavy lines indicate new work.

QUANTITIES		TOTAL
Repair Conc. Deck (Half-Soling)	Sq. Ft.	1585
Full Depth Repair	Sq. Ft.	23
Bituminous Material (Seal Coat) (Asph. Conc.)	Gal.	370
Asph. Cement 60-70 or AC-20	Ton	3.1
Mineral Aggr. (Asph. Conc.) (Type A Mix)	Ton	78
Cover Aggr. (Grade 3)	Ton	23
Preformed Compression Expansion Jt. Seal (4.0)	L.F.	0
504.01 Preformed Compression Expansion Jt. Seal (4.0)	L.F.	54

BRIDGE: RAMP "E" OVER RTE. I 70
& RAMP "F"

JOB NO. 4-I-435-514
PROJ. NO. IR-435-1(165)
JACKSON COUNTY A-990R

Sheet No 1 of 4

B.M.

BRIDGE

STATE ROAD

ABOUT

PROJECT NO. IR-435-1(165) **STA.**

JOB NO. 4-I-435-514 **RTE.** I-435

JACKSON **COUNTY**

DATE

STD.
STD.
A990R

DESIGNED 19
DETAILED 19
CHECKED 19

Note: This drawing is not to scale. Follow dimensions.

Sheet No. 1A **of** 4

84

MISSOURI HIGHWAY AND TRANSPORTATION COMMISSION

U.I.P. (68'-85'-90'-72') CONTINUOUS CONCRETE BOX GIRDER SPANS

State	Proj. No.	Sheet No.
MO		81
SEC/SUR 19 TWP 49N RGE 32W		

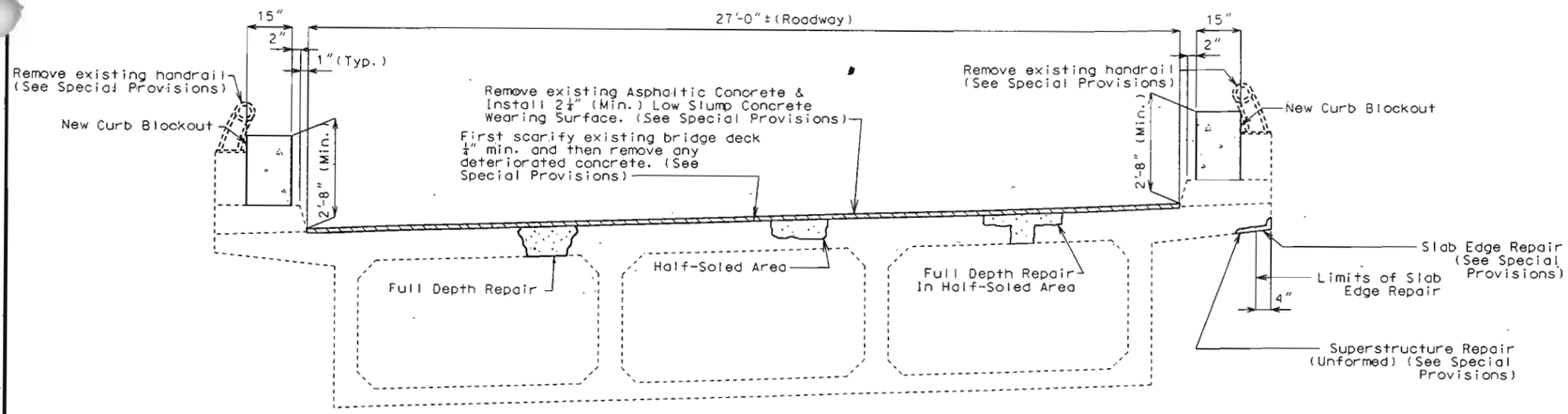

SECTION THRU SLAB

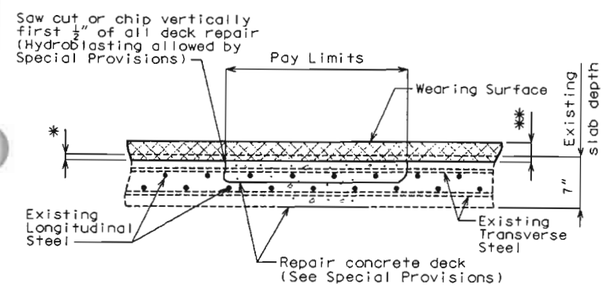

* First Scarify existing bridge deck ¼" min. and then remove any deteriorated concrete. (See Special Provisions)

** 2¼" (min.) Low Slump Concrete Wearing Surface

HALF-SOLED AREA

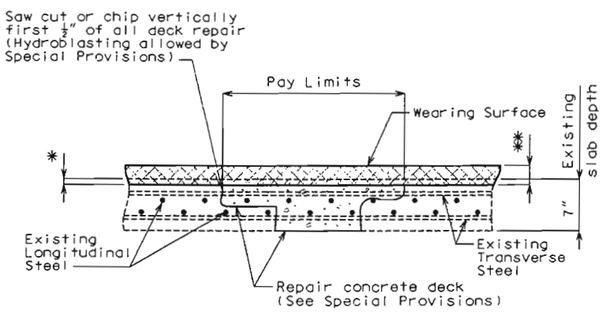

* First Scarify existing bridge deck ¼" min. and then remove any deteriorated concrete. (See Special Provisions)

** 2¼" (min.) Low Slump Concrete Wearing Surface

FULL DEPTH REPAIR IN HALF-SOLED AREA

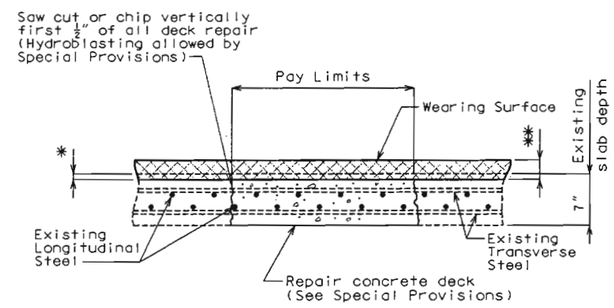

* First Scarify existing bridge deck ¼" min. and then remove any deteriorated concrete (See Special Provisions)

** 2¼" (min.) Low Slump Concrete Wearing Surface

FULL DEPTH REPAIR

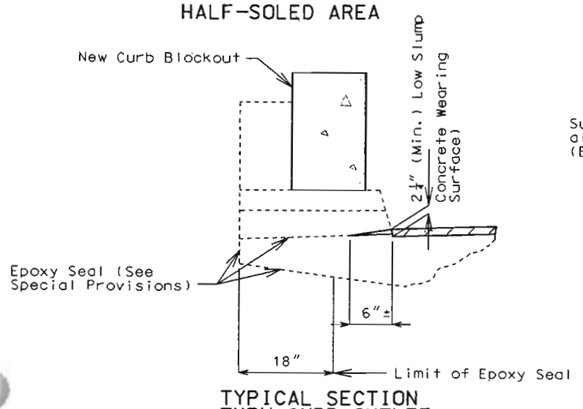

TYPICAL SECTION THRU CURB OUTLET

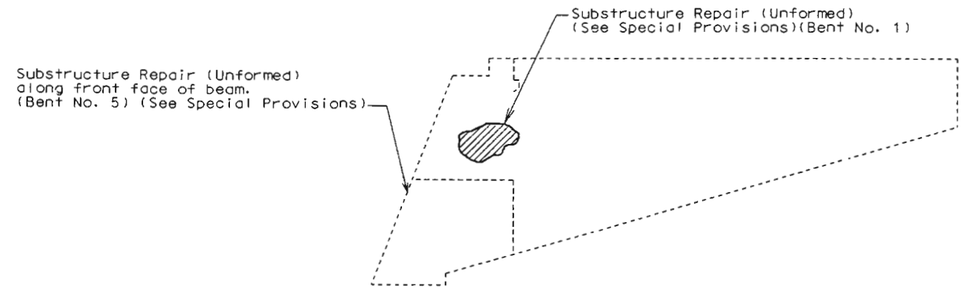

DETAIL OF END BENT WING SHOWING SUBSTRUCTURE REPAIR AT BENT NOS. 1 & 5

STATE OF MISSOURI GREGORY E. SANDERS NUMBER E-2000162157

DATE 8-22-02

Note: For General Notes & Quantities, see sheet no. 2.

REPAIRS TO BRIDGE (RAMP "E") OVER RTE. I-70 & RAMP "F"

STATE ROAD FROM RTE. 350 NORTH TO RTE. 40

ABOUT 0.5 MILE SOUTH OF RTE. 40

PROJECT NO. STA. 8+69.20± (match existing)

JOB NO. J4I0712 RTE. I-435

JACKSON COUNTY

Date: / /

STD. 609.00
STD. 706.35
A09902

REV.

Designed Mar. 2002
Detailed Mar. 2002
Checked July 2002

Note: This drawing is not to scale. Follow dimensions.

T:\br-proj\robinet\Mst-A09902\a09902_000front.dgn 9:54 AM 08/20/2002

State	Proj. No.	Sheet No.
MO		B3

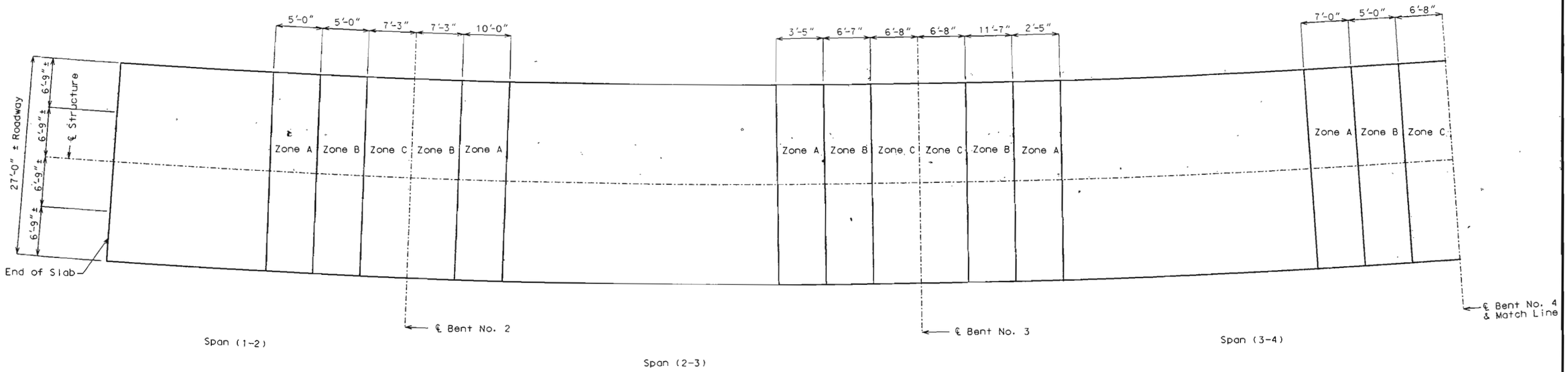

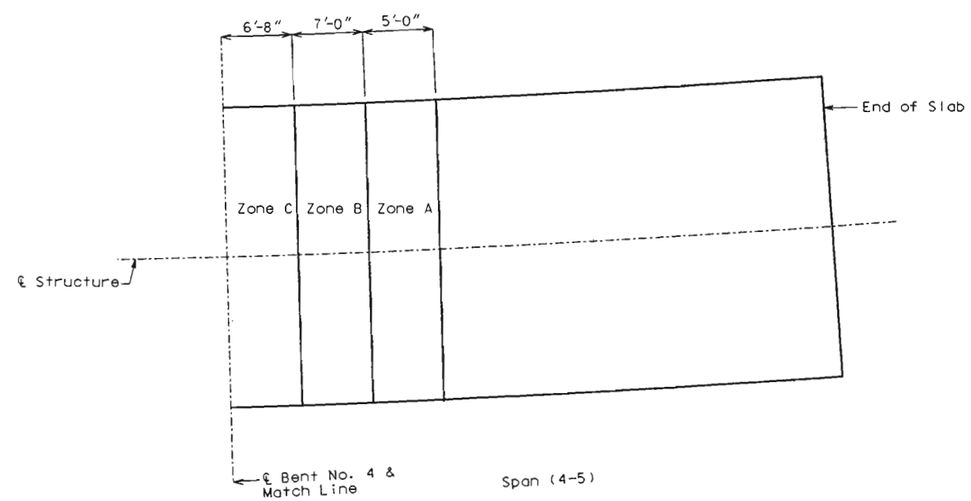

Note:

Zones with the same letter designation may be repaired at the same time except for the zones directly adjacent to the centerline of bent. Sequence of repairs follows Zone A, Zone B then Zone C in alphabetical order. If either of the zones adjacent to centerline of bent has a single repair area of over 10 square feet or a total repair area of over 20 square feet, that zone shall be repaired before removing concrete in the other zone of the same designation at that bent.

Any repair in the remainder of the bridge that is within 42" of Zone A shall be completed before removing old concrete in Zone A.

PLAN OF SLAB SHOWING SPECIAL REPAIR ZONES

STATE OF MISSOURI
GREGORY E. SANDERS
NUMBER E-20001[illegible]
REGISTERED PROFESSIONAL ENGINEER
DATE 8-22-02

Detailed Mar. 2002
Checked July 2002

Note: This drawing is not to scale. Follow dimensions.

JACKSON COUNTY A09902

REV.

T:\br-proj\robinct\Misc-A09902\A09902_000zone.dgn 01:15:11 PM 08/21/2002

State	Proj. No.	Sheet No.
MO		B5

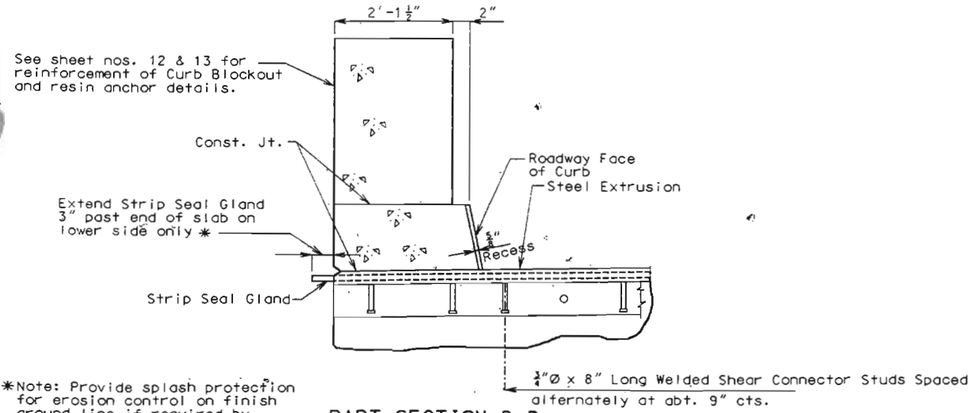

*Note: Provide splash protection for erosion control on finish ground line if required by the engineer (Roadway Item).

PART SECTION D-D

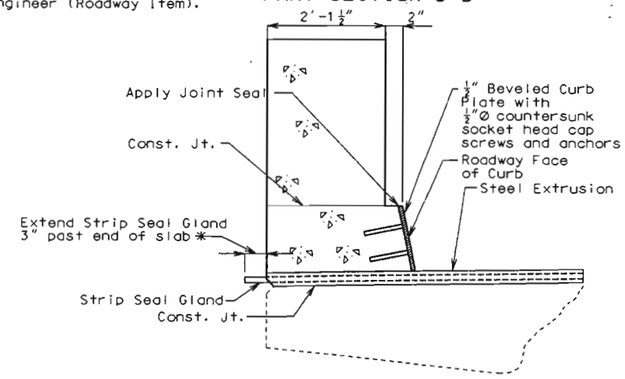

PART SECTION E-E (SHOWING CONCRETE REPLACEMENT)

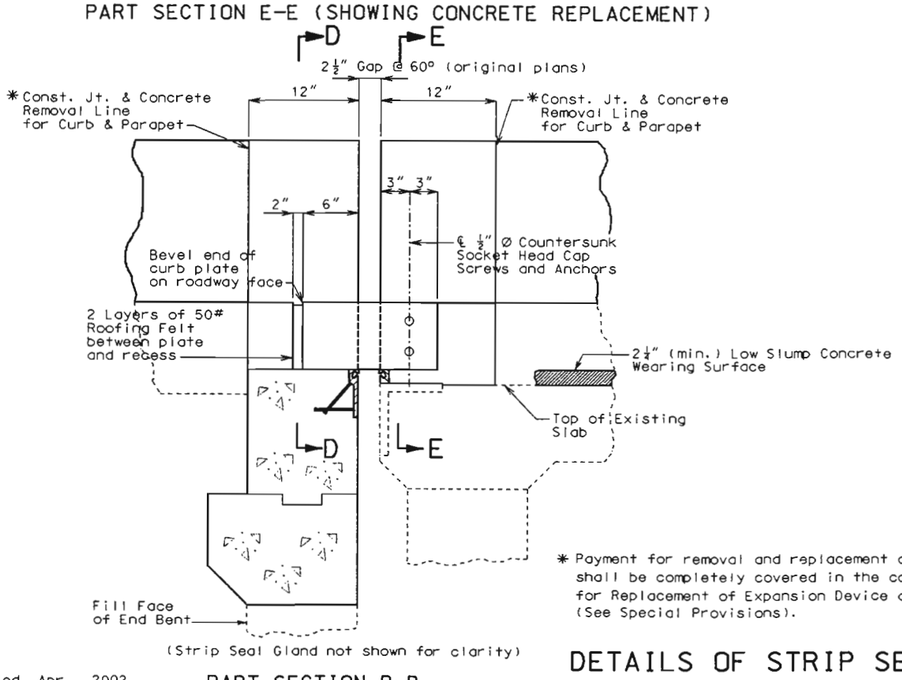

(Strip Seal Gland not shown for clarity)

PART SECTION B-B

* Payment for removal and replacement of curb and parapets shall be completely covered in the contract unit price for Replacement of Expansion Device and Adjacent Concrete (See Special Provisions).

DETAIL OF GLAND

Note: Use single layer gland, no multiple layer glands allowed.

Strip seal gland size = 4"

STRIP SEAL GLAND

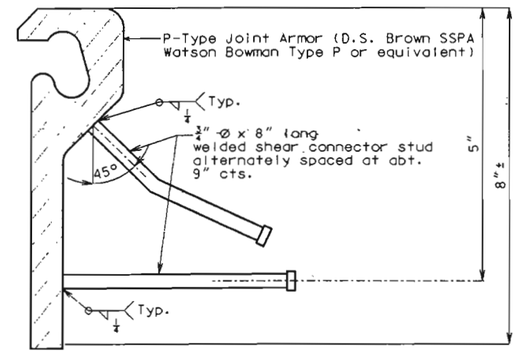

DETAIL OF STEEL EXTRUSION IN BACKWALL OF END BENT

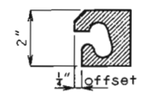

DETAIL OF STEEL EXTRUSION ON EXISTING SLAB

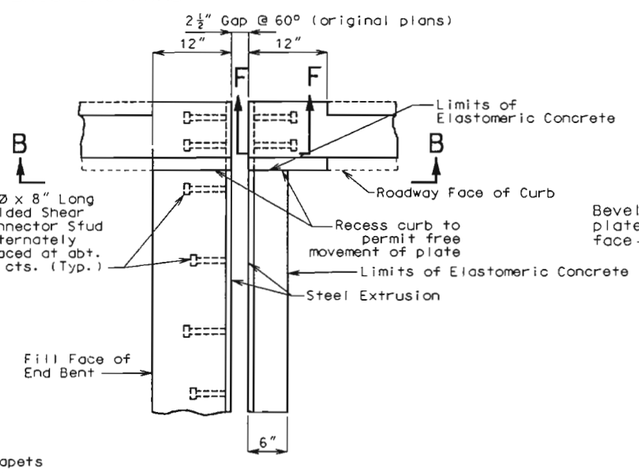

PART PLAN

NOTE:

The expansion device shall be fabricated and installed in accordance with the recommendations of the manufacturer, and as set forth in the Special Provisions.

The contractor shall verify all dimensions prior to fabrication.

Splices of steel extrusion shall develop full strength.

All steel shall be ASTM A709 Grade 36, except steel extrusions shall be ASTM A709 Grade 50W or Grade 36.

Neoprene Strip Seal shall meet ASTM D-2628.

Anchors for the extrusions or armor shall be approved welded studs (C1010 thru C1020).

All welds shall conform to Section 712 of the Missouri Standard Specifications.

Concrete shall be forced under and around strip seal extrusions and studs. Proper consolidation of the concrete shall be achieved by localized internal vibration.

Plan dimensions are based on installation at 60°F. The gap shall be increased $\frac{1}{16}$" for each 10° fall in temperature and decreased $\frac{1}{16}$" for each 10° rise in temperature from the installation temperature.

Longitudinal reinforcing steel shall be placed so that ends shall not be more than 1"± from vertical leg of extrusion at Expansion Device.

Structural steel for the expansion device shall be coated with a minimum of two coats of inorganic zinc primer (5 mils minimum). Anchors need not be protected from overspray.

Payment for furnishing, coating and placing steel extrusions, miscellaneous structural steel, and neoprene strip seal shall be made under the contract unit price for Strip Seal Expansion Joint System per lin. ft.

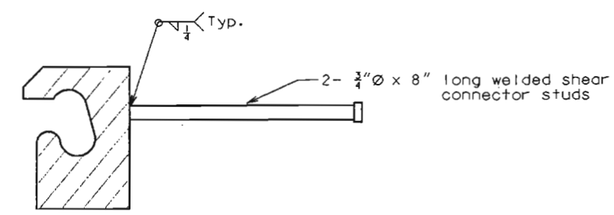

Note: Shift existing reinforcement in curb to clear studs.

PART SECTION F-F

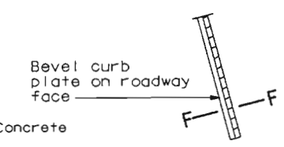

AT END OF BEVELED CURB PLATE

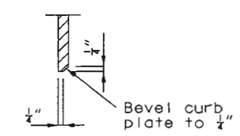

SECTION F-F

STATE OF MISSOURI GREGORY E. SANDERS NUMBER E-2000162167 REGISTERED PROFESSIONAL ENGINEER

DATE 8-22-02

DETAILS OF STRIP SEAL EXPANSION DEVICE REPLACEMENT AT END BENTS

Detailed Apr. 2002
Checked July 2002

Sheet No. 5 of 15

JACKSON COUNTY

A09902

STATE	PROJ. NO.	SHEET NO.
MO.		B7

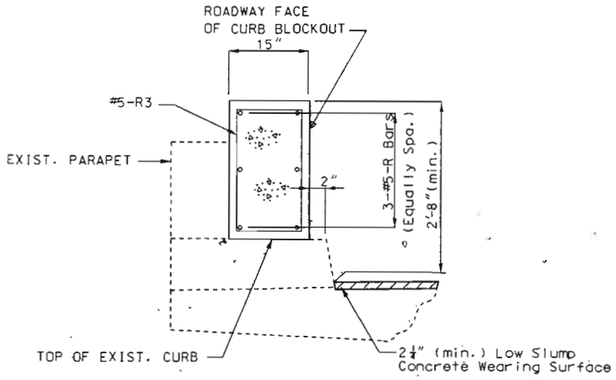

TYPICAL SECTION THRU CURB
BLOCKOUT SHOWING REINFORCEMENT

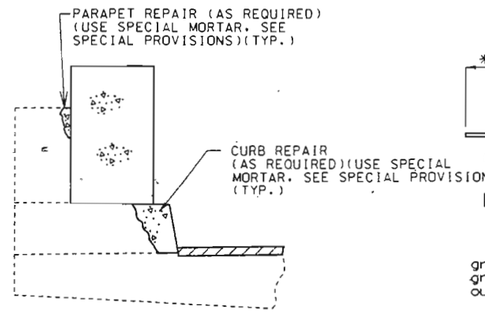

TYPICAL SECTION THRU CURB BLOCKOUT
SHOWING CONCRETE CURB & PARAPET REPAIR

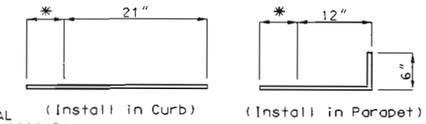

DETAILS OF RESIN ANCHORS
AT 15" CURB BLOCKOUTS

* Manufacturer's embedment depth but no greater than 5" in Exist. Parapet and no greater than 7" in Exist. Curb (4" over curb outlets).

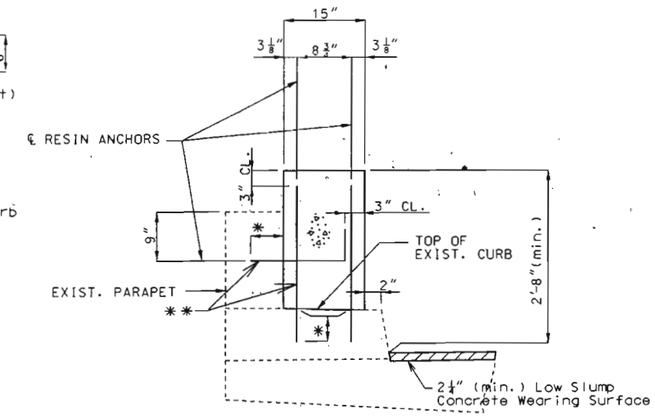

TYPICAL SECTION THRU CURB
BLOCKOUT SHOWING RESIN ANCHORS

** Resin anchors spaced with alternating pattern at abt. 12" cts.

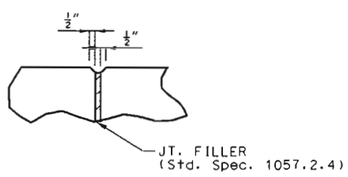

FILLED JOINT DETAIL

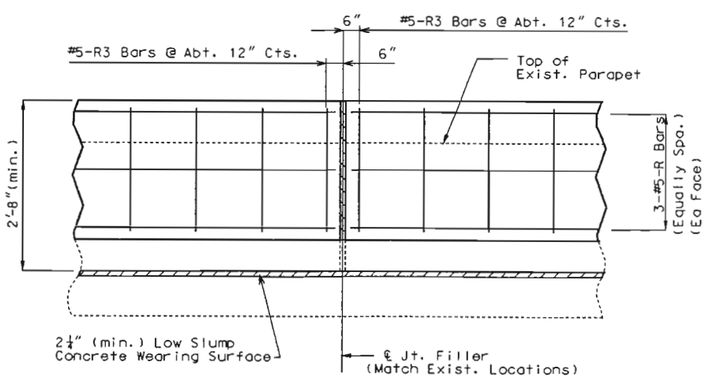

PART ELEVATION OF CURB BLOCKOUT SHOWING REINFORCEMENT

NOTES FOR CURB BLOCKOUT:

Concrete in curb blockout shall be Class B-1.

Measurement of the concrete Curb Blockout is to the nearest linear foot, measured along the inside face of existing parapet from end of wing to end of wing.

All exposed edges of curb blockout shall have ½" radius or ⅛" bevel unless otherwise shown.

Payment for concrete, reinforcing steel, resin anchors and any other work incidental to the curb blockout complete in place shall be included in the contract unit price for Curb Blockout.

Cost of any concrete curb & parapet repair shall be considered completely covered in the contract unit price for Curb Blockout.

Use a minimum lap of 3'-0" for #5 horizontal Curb Blockout bars where necessary.

The cross-sectional area of the Curb Blockout above top of existing curb = 2.59± sq. ft.

Provide or maintain access to existing active conduit systems and junction boxes.

Shift reinforcing steel in field where necessary to clear access openings for existing active junction boxes and conduit systems.

Match locations of existing filled joints.

Longitudinal reinforcing steel shall be field cut to required length between filled joints.

All reinforcing shall be epoxy coated.

Contractor shall prevent damage to existing conduit at light support standards and elsewhere on bridge (See Special Provisions).

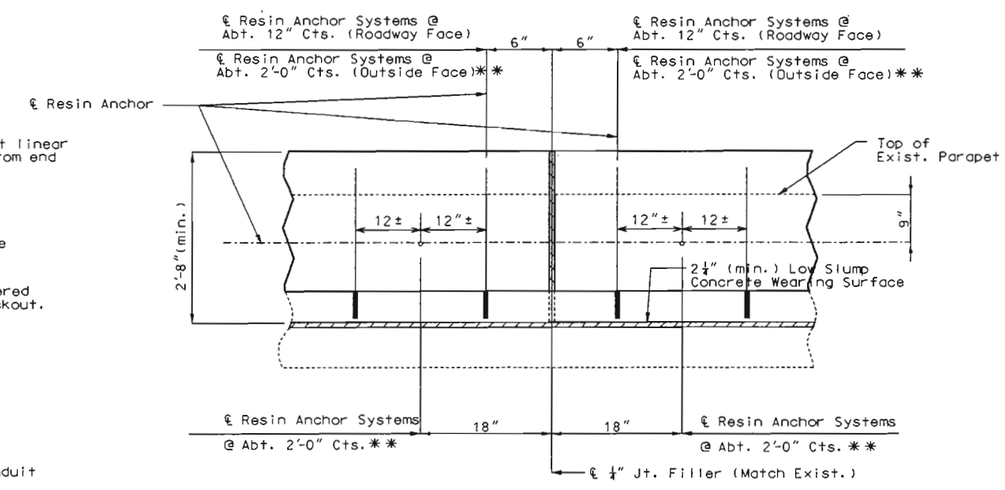

PART SECTION OF CURB BLOCKOUT SHOWING RESIN ANCHORS

STATE OF MISSOURI
GREGORY E. SANDERS
NUMBER E-2000016216
DATE 8-22-02

DETAILED Mar. 2002
CHECKED July 2002

TYPICAL DETAILS OF CURB BLOCKOUT

NOTE: THIS DRAWING IS NOT TO SCALE. FOLLOW DIMENSIONS.

JACKSON COUNTY

A09902

STATE	PROJ. NO.	SHEET NO.
MO.		09

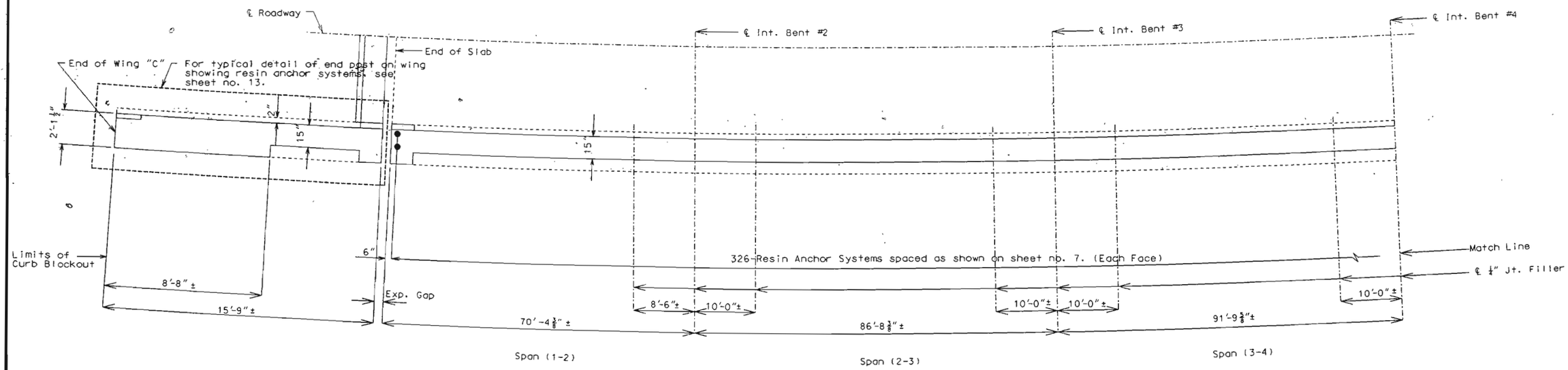

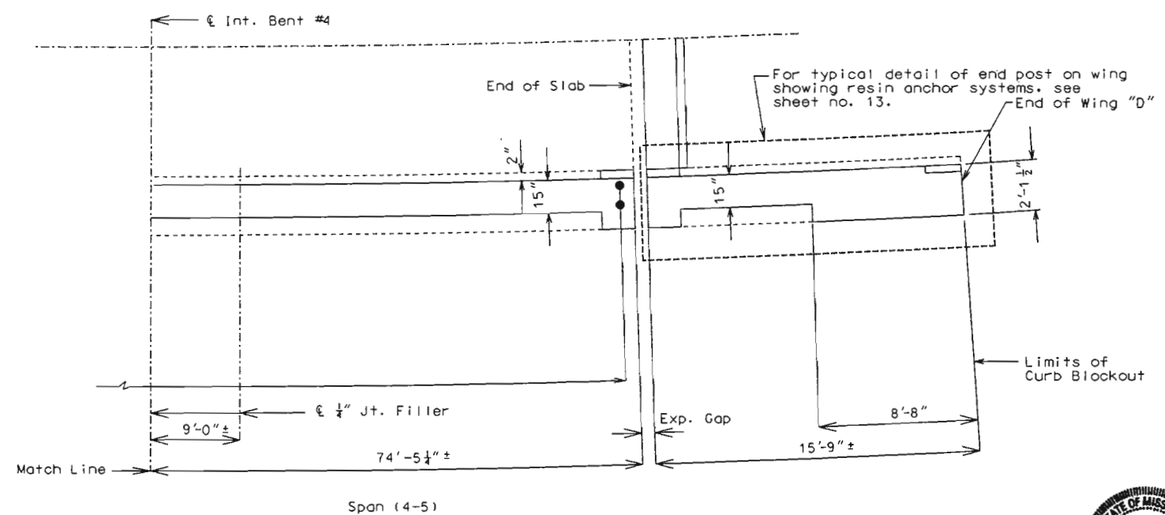

Note: Longitudinal dimensions shown are along ℄ parapet.
Match existing curb joints.
For details of resin anchor systems not shown see sheet no. 7.

STATE OF MISSOURI
GREGORY E. SANDERS
NUMBER E-2000162197

DATE 8-22-02

PLAN OF RIGHT CURB BLOCKOUT SHOWING RESIN ANCHOR SPACING

DETAILED MAR. 2002
CHECKED July 2002

NOTE: THIS DRAWING IS NOT TO SCALE. FOLLOW DIMENSIONS.

JACKSON COUNTY

A09902

STATE	PROJ. NO.	SHEET NO.
MO.		B11

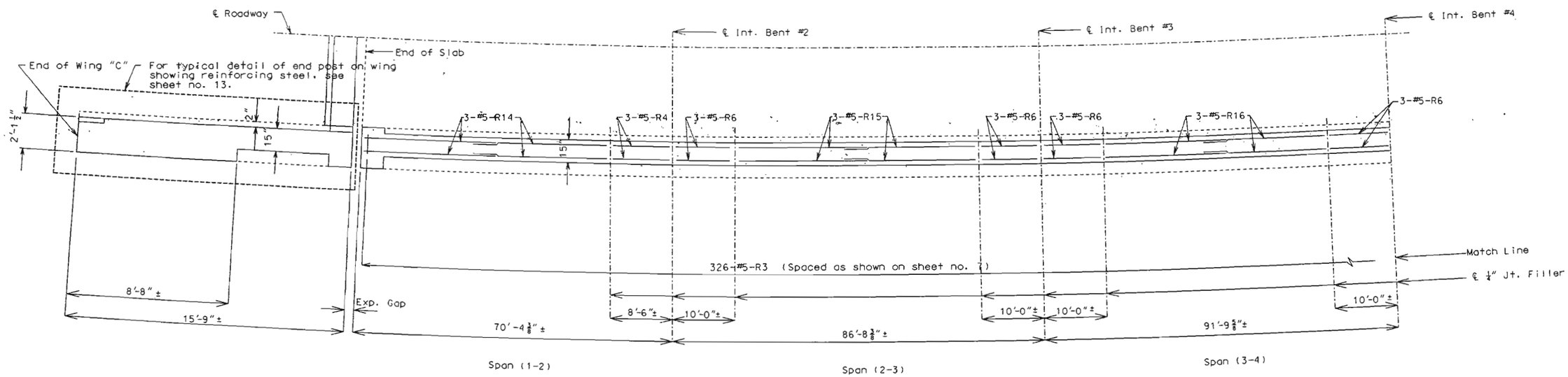

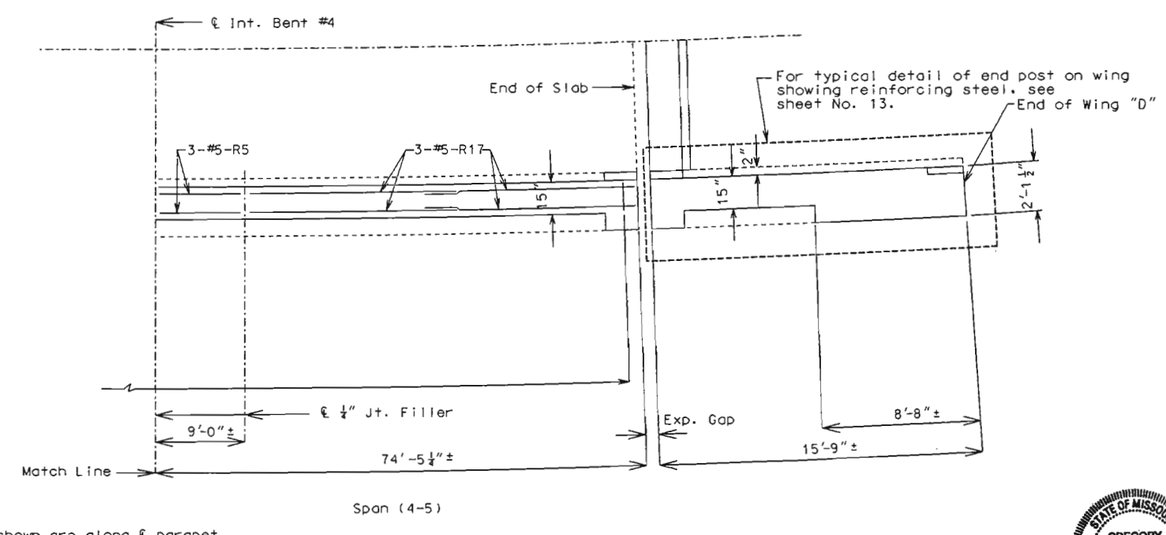

Note: Longitudinal dimensions shown are along ℄ parapet.
Match existing curb joints.
For details of reinforcing steel not shown see sheet no. 7.
Use a minimum lap of 3'-0" for #5-R horizontal curb blockout bars.

STATE OF MISSOURI
GREGORY E. SANDERS
NUMBER E-20001[illegible]67
REGISTERED PROFESSIONAL ENGINEER

DATE 8-22-02

PLAN OF RIGHT CURB BLOCKOUT SHOWING REINFORCING STEEL

DETAILED MAR. 2002
CHECKED July 2002

NOTE: THIS DRAWING IS NOT TO SCALE. FOLLOW DIMENSIONS.

JACKSON COUNTY

A09902

STATE	PROJ. NO.	SHEET NO.
MO.		B13

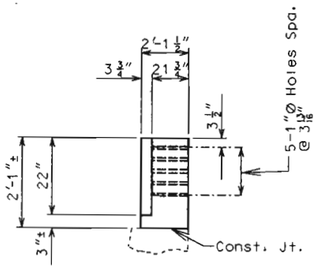

PART ELEVATION H-H

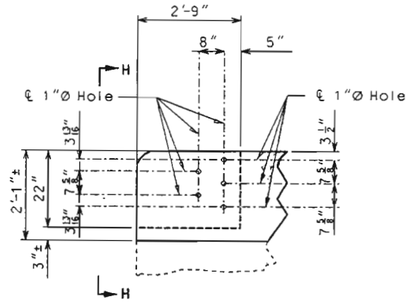

PART ELEVATION

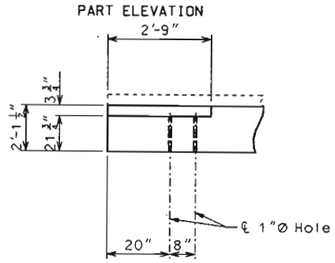

PART PLAN

DETAILS OF GUARD RAIL ATTACHMENT
(BOTH WINGS)

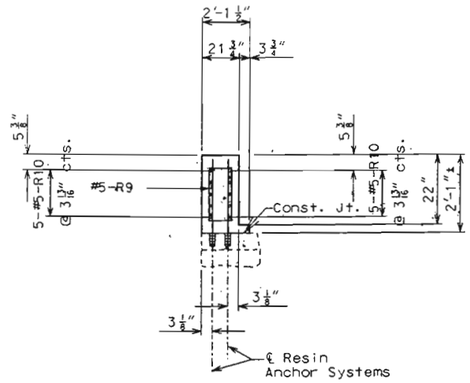

SECTION E-E

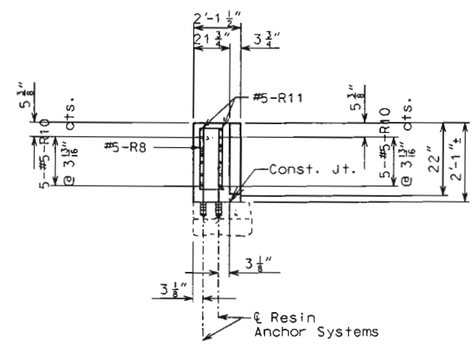

SECTION F-F

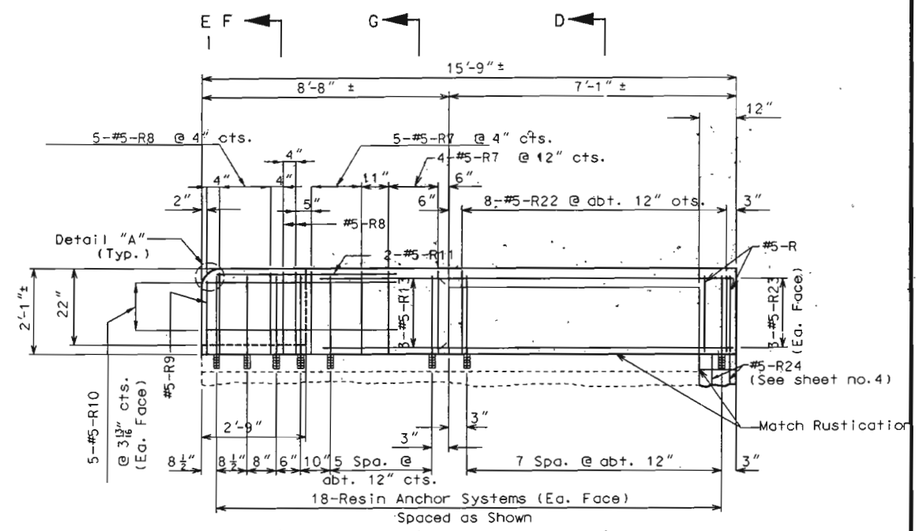

ELEVATION OF NEW END POST
ON WING

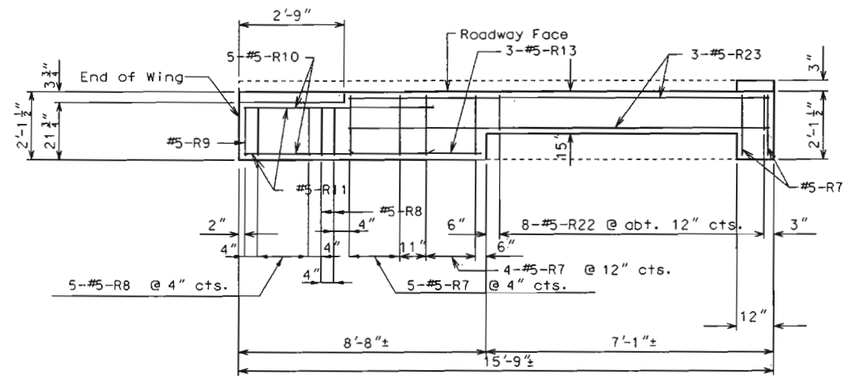

PLAN OF NEW END POST
ON WING

Note: Resin anchors not shown in plan for clarity.

✱ As shown on sheet no. 7 (Typ.)

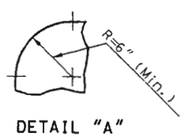

DETAIL "A"

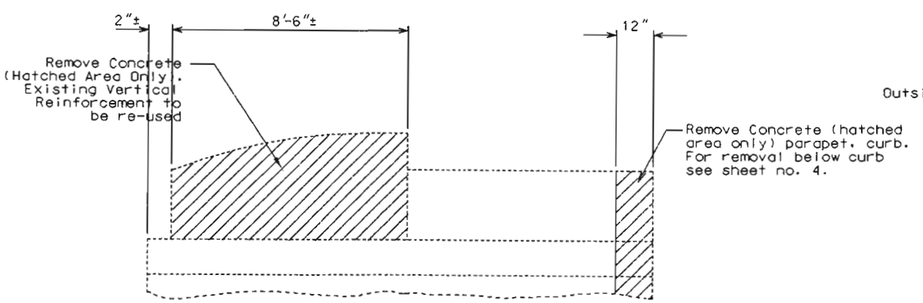

ELEVATION OF EXISTING END
POST SHOWING CONCRETE REMOVAL

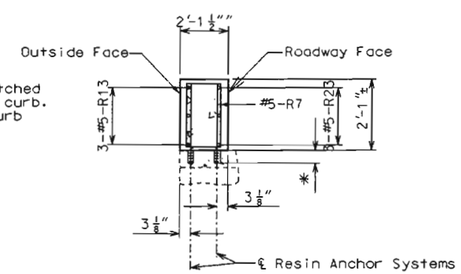

SECTION G-G

①Use alternating resin anchors in existing parapet & curb as shown on sheet no. 7.

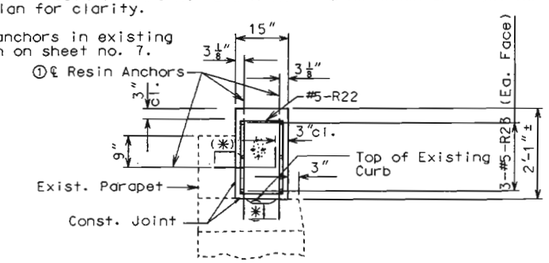

SECTION D-D

STATE OF MISSOURI
GREGORY E. SANDERS
NUMBER E-20001621 67
REGISTERED PROFESSIONAL ENGINEER
DATE 8-22-02

Note: For correct orientation, see sheet no. 11.

TYPICAL DETAILS OF END POST BLOCKOUT ON WING "C" & "D"

DETAILED MAR. 2002
CHECKED July 2002

NOTE: THIS DRAWING IS NOT TO SCALE. FOLLOW DIMENSIONS.

SHEET NO. 13 OF 15

JACKSON COUNTY

A09902

BILL OF REINFORCING STEEL

NO. REQ'D.	MARK NO. SIZE MARK	LOCATION	EPOXY (E)	SHAPE NO.	STIRRUP (S)	SUBSTR. (X)	VARIES (V)	NO. EACH	B FT. IN.	C FT. IN.	D FT. IN.	E FT. IN.	F FT. IN.	H FT. IN.	K FT. IN.	NOMINAL LENGTH FT. IN.	ACTUAL LENGTH FT. IN.	WEIGHT LBS.
		SUPERSTR.																
		END BT 1 & 5																
8	6 H1	BACKWALL	E	20					26 9.000							26 9	26 9	321
8	6 H2	BACKWALL	E	20					26 9.000							26 9	26 9	321
54	5 H3	BACKWALL	E	19					21.000	18.000						3 3	3 2	178
38	4 U1	BACKWALL	E	10	S					18.000	9.000					3 9	3 7	91
38	4 U2	BACKWALL	E	10	S					15.000	15.000					3 9	3 7	91
640	5 R3	BARRIER CURB	E	13	S				12.000	21.500	12.000	21.500				6 6	6 2	4116
12	5 R4	BARRIER CURB	E	20					8 3.000							8 3	8 3	103
12	5 R5	BARRIER CURB	E	20					8 9.000							8 9	8 9	110
48	5 R6	BARRIER CURB	E	20					9 9.000							9 9	9 9	488
44	5 R7	BARRIER CURB	E	13	S				22.500	22.000	22.500	22.000				8 4	8 0	367
28	5 R8	BARRIER CURB	E	13	S				18.750	22.000	18.750	22.000				7 9	7 5	217
4	5 R9	BARRIER CURB	E	13	S				18.750	17.000	18.750	17.000				6 11	6 7	27
40	5 R10	BARRIER CURB	E	20					6 0.000							6 0	6 0	250
8	5 R11	BARRIER CURB	E	20					5 9.000							5 9	5 9	48
12	5 R12	BARRIER CURB	E	20					13 9.000							13 9	13 9	172
12	5 R13	BARRIER CURB	E	20					8 5.000							8 5	8 5	105
12	5 R14	BARRIER CURB	E	20					32 4.000							32 4	32 4	405
12	5 R15	BARRIER CURB	E	20					34 9.000							34 9	34 9	435
12	5 R16	BARRIER CURB	E	20					37 3.000							37 3	37 3	466
12	5 R17	BARRIER CURB	E	20					34 2.000							34 2	34 2	428
12	5 R18	BARRIER CURB	E	20					31 0.000							31 0	31 0	388
12	5 R19	BARRIER CURB	E	20					33 10.000							33 10	33 10	423
12	5 R20	BARRIER CURB	E	20					35 6.000							35 6	35 6	444
12	5 R21	BARRIER CURB	E	20					32 8.000							32 8	32 8	409
34	5 R22	BARRIER CURB	E	13	S				12.000	20.500	12.000	20.500				6 4	6 0	213
16	5 R23	BARRIER CURB	E	20					12 9.000							12 9	12 9	213
8	5 R24	BARRIER CURB	E	10	S					18.000	2 1.500					5 2	4 11	41
		TOTALS																
	4		E															182
	5		E															10046
	6		E															642
		TOTAL																0
		TOTAL	E															10870
		Slab on Girder																
	4		E															182
	5		E															178
	6		E															642
		TOTAL																1002

BILL OF REINFORCING STEEL

NO. REQ'D.	MARK NO. SIZE MARK	LOCATION	EPOXY (E)	SHAPE NO.	STIRRUP (S)	SUBSTR. (X)	VARIES (V)	NO. EACH	B FT. IN.	C FT. IN.	D FT. IN.	E FT. IN.	F FT. IN.	H FT. IN.	K FT. IN.	NOMINAL LENGTH FT. IN.	ACTUAL LENGTH FT. IN.	WEIGHT LBS.
		Safety Barrier Curb																
	5		E															9868
		TOTAL																9868

State	Proj. No.	Sheet No.
MO		15

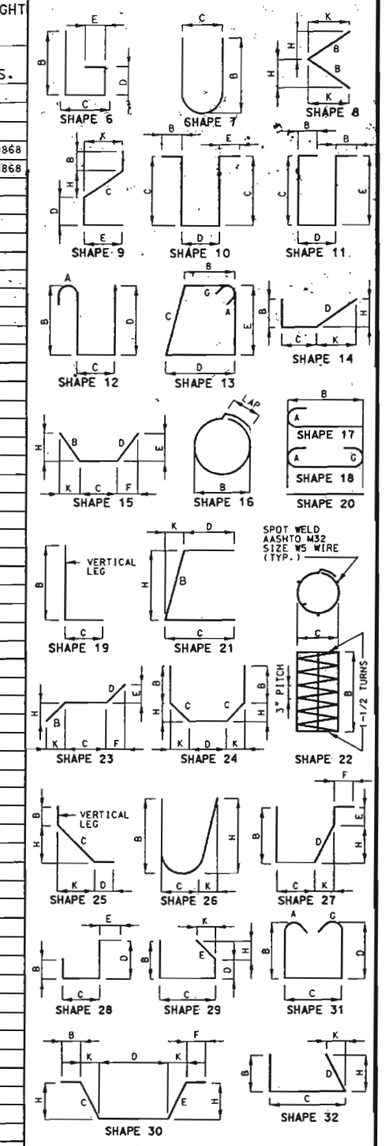

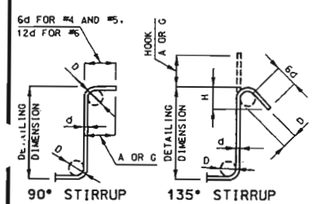

DETAILED JULY 2002
CHECKED JULY 2002

STIRRUP HOOK DIMENSIONS				
GRADES 40 - 50 - 60 KSI				
BAR SIZE	D (IN.)	90° HOOK	135° HOOK	
		HOOK A OR G	HOOK A OR G	APPROX. H
#4	2"	4-1/2"	4-1/2"	3"
#5	2-1/2"	6"	5-1/2"	3-3/4"
#6	4-1/2"	12"	8"	4-1/2"

NOTE: UNLESS OTHERWISE NOTED DIAMETER "D" IS THE SAME FOR ALL BENDS AND HOOKS ON A BAR.

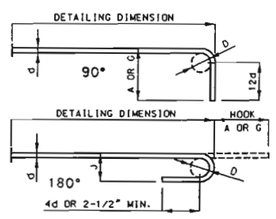

END HOOK DIMENSIONS				
BAR SIZE	D (IN.)	ALL GRADES		
		180° HOOKS		90° HOOKS
		A OR G	J	A OR G
#3	2-1/4"	5"	3"	6"
#4	3"	6"	4"	8"
#5	3-3/4"	7"	5"	10"
#6	4-1/2"	8"	6"	12"
#7	5-1/4"	10"	7"	14"
#8	6"	11"	8"	16"
#9	9-1/2"	15"	11-3/4"	19"
#10	10-3/4"	17"	13-1/4"	22"
#11	12"	19"	14-3/4"	2'-0"
#14	18-1/4"	2'-3"	21-3/4"	2'-7"

* TWO ADDITIONAL #6H1 & #5R23 ARE INCLUDED IN THE BAR BILL FOR TESTING.

NOTE:
ALL STANDARD HOOKS AND BENDS OTHER THAN 180 DEG. TO BE BENT WITH THE SAME PROCEDURE AS FOR 90 DEG. STD. HOOKS.
HOOKS AND BENDS SHALL BE IN ACCORDANCE WITH THE PROCEDURES AS SHOWN ON THIS SHEET.
E = EPOXY COATED REINFORCEMENT.
S = STIRRUP.
X = BAR IS INCLUDED IN SUBSTRUCTURE QUANTITIES.
V = BAR DIMENSIONS VARY IN EQUAL INCREMENTS BETWEEN DIMENSIONS SHOWN ON THIS LINE AND THE FOLLOWING LINE.
NO. EA. = NUMBER OF BARS OF EACH LENGTH.
NOMINAL LENGTHS ARE BASED ON OUT TO OUT DIMENSIONS SHOWN IN BENDING DIAGRAMS AND ARE LISTED FOR FABRICATOR'S USE (NEAREST INCH).
ACTUAL LENGTHS ARE MEASURED ALONG CENTERLINE BAR TO THE NEAREST INCH.
PAYWEIGHTS ARE BASED ON ACTUAL LENGTHS.
FOUR ANGLE OR CHANNEL SPACERS ARE REQUIRED FOR EACH COLUMN SPIRAL. SPACERS ARE TO BE PLACED ON INSIDE OF SPIRALS. LENGTH AND WEIGHT OF COLUMN SPIRALS DO NOT INCLUDE SPLICES OR SPACERS.
REINFORCING STEEL (GRADE 60) = FY 60,000 PSI.

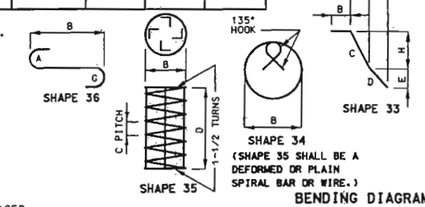

BENDING DIAGRAMS

STATE OF MISSOURI
GREGORY E. SANDERS
NUMBER E-2000162197
REGISTERED PROFESSIONAL ENGINEER

DATE 8-22-02

NOTE: THIS DRAWING IS NOT TO SCALE. FOLLOW DIMENSIONS.

SHEET NO. 15 OF 15

JACKSON COUNTY A09902

MISSOURI HIGHWAY AND TRANSPORTATION COMMISSION

U.I.P. (68'-85'-90'-72') CONTINUOUS CONCRETE BOX GIRDER SPANS

State	Proj. No.	Sheet No.
MO	J4I0712	B1
021115-407	I-435-1(277)	
SEC/SUR 19 TWP 49N RGE 32W		

FINAL PLANS

I CERTIFY THAT THIS PLAN SHEET ACCURATELY DEPICTS THE CONFIGURATION AND LOCATION OF THE ROADWAY AND ALL ITS APPURTENANT FEATURES, TO THE BEST OF MY KNOWLEDGE, AS I AND MY STAFF HAVE OBSERVED THE CONTRACTOR'S CONSTRUCTION OF THIS PROJECT. I SPECIFICALLY DISCLAIM ANY RESPONSIBILITY FOR THE DESIGN OF THIS PROJECT, EXCEPT AS I AND MY STAFF MAY HAVE MODIFIED OR AUTHORIZED THE MODIFICATION OF THE PROJECT DESIGN DURING ITS CONSTRUCTION; AND I DISCLAIM RESPONSIBILITY FOR THE CONTRACTOR'S ACTUAL CONSTRUCTION OF THE PROJECT, EXCEPT AS I AND MY STAFF MAY HAVE DIRECTED OR ORDERED THAT THE PROJECT BE CONSTRUCTED.

SIGNATURE 4-25-05 DATE

STATE OF MISSOURI KIRSTEN MUNCK NUMBER PE-2003001076 PROFESSIONAL ENGINEER 4-25-05

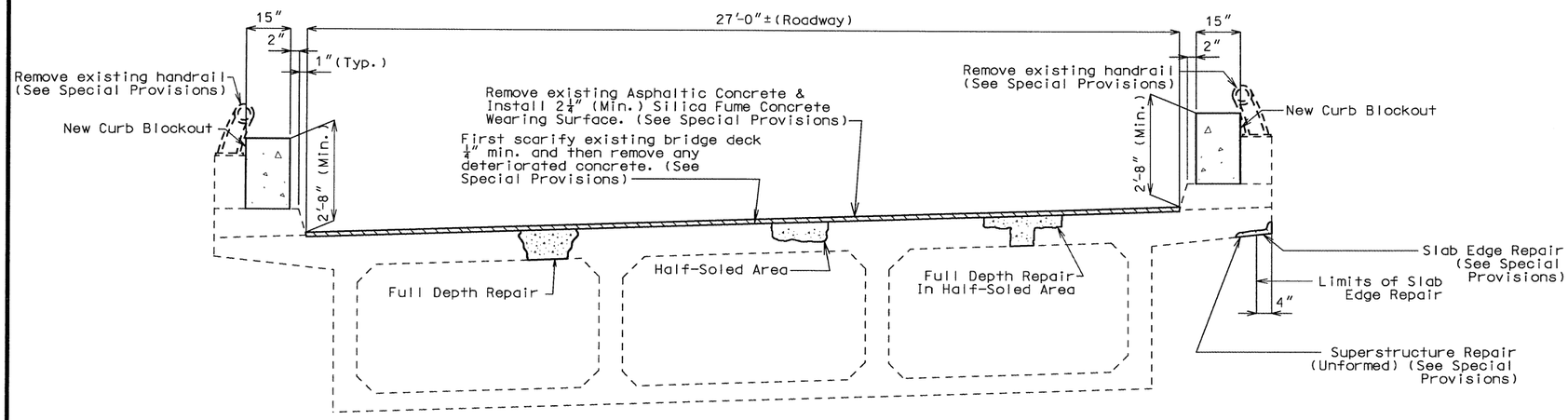

SECTION THRU SLAB

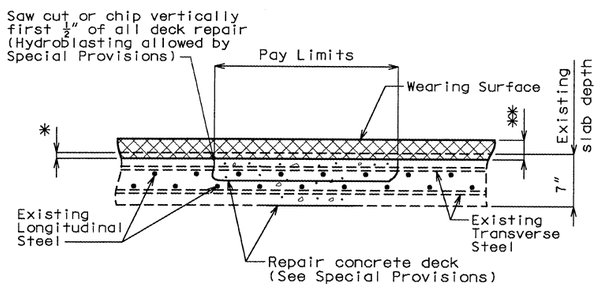

* First Scarify existing bridge deck ¼" min. and then remove any deteriorated concrete. (See Special Provisions)

** 2¼" (min.) Low Slump Concrete Wearing Surface

HALF-SOLED AREA

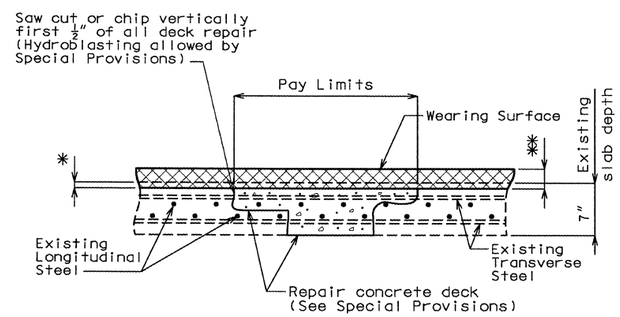

* First Scarify existing bridge deck ¼" min. and then remove any deteriorated concrete. (See Special Provisions)

** 2¼" (min.) Low Slump Concrete Wearing Surface

FULL DEPTH REPAIR IN HALF-SOLED AREA

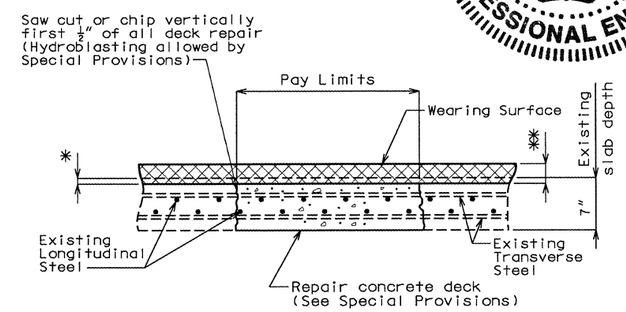

* First Scarify existing bridge deck ¼" min. and then remove any deteriorated concrete (See Special Provisions)

** 2¼" (min.) Low Slump Concrete Wearing Surface

FULL DEPTH REPAIR

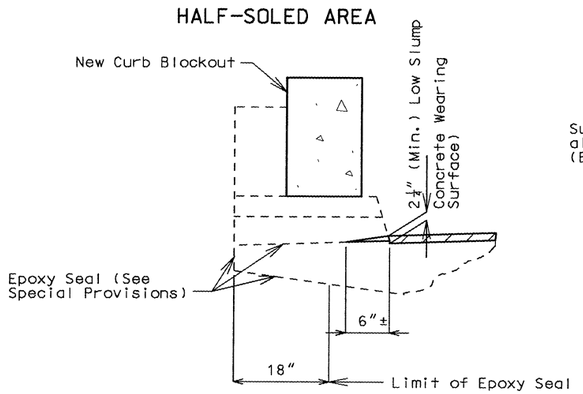

TYPICAL SECTION THRU CURB OUTLET

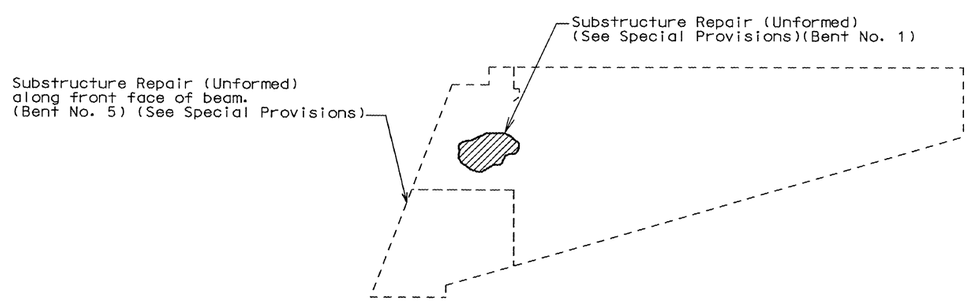

DETAIL OF END BENT WING SHOWING SUBSTRUCTURE REPAIR AT BENT NOS. 1 & 5

Note: For General Notes & Quantities, see sheet no. 2.

REPAIRS TO BRIDGE (RAMP "E") OVER RTE. I-70 & RAMP "F"

STATE ROAD FROM RTE. 350 NORTH TO RTE. 40

ABOUT 0.5 MILE SOUTH OF RTE. 40

PROJECT NO. STA. 8+69.20± (match existing)

JOB NO. J4I0712 RTE. I-435

JACKSON COUNTY Date: / /

STD. 609.00

STD. 706.35

A09902 REV.

Designed Mar. 2002
Detailed Mar. 2002
Checked July 2002

Note: This drawing is not to scale. Follow dimensions.

Sheet No. 1 of 15

J:\PROJECTS\J4I0712\MicroStation\Bridge\J4I0712\A09902\a09902_001.dgn 12:32:38 PM 02/28/2005

State	Proj. No.	Sheet No.
MO	J4I0712	B2
021115-407	I-435-1(277)	
SEC/SUR 19 TWP 49N RGE 32W		

FINAL QUANTITIES

ITEM		TOTAL
Asphalt Removal (Bridges)	sq. ft.	8490
Replacement of Expansion Device and Adjacent Concrete	lin. ft.	54
Removal of Existing Bridge Rails	lin. ft.	666
Bridge Approach Slab (Bridge)	sq. yd.	152
Substructure Repair (Unformed)	sq. ft.	15
Superstructure Repair (Unformed)	sq. ft.	5
Protective Coating for Concrete Bents and Concrete Piers under Expansion Devices	lump sum	1
Curb Blockout	lin. ft.	699
Repairing Concrete Deck (Half-Soling)	sq. ft.	7101
Full Depth Repair	sq. ft.	1180
Slab Edge Repair (Bridges)	lin. ft.	10
Silica Fume Concrete Wearing Surface	sq. yd.	943
Strip Seal Expansion Joint System	lin. ft.	54

Notes:

Payment for the removal and replacement of any end posts shall be included in contract unit price for Curb Blockout per lin. ft.

Removal of concrete & reinforcing at End Bent Nos. 1 and 5 shall be completely covered in the contract unit price for Replacement of Expansion Device and Adjacent Concrete per lin. ft.(See Special Provisions).

All concrete & reinforcing required for replacement of backwall, curbs and parapets necessary for placement of strip seal expansion devices at End Bent Nos. 1 & 5 shall be completely covered in the contract unit price for Replacement of Expansion Device and Adjacent Concrete per lin. ft. (See Special Provisions).

Removal of existing Bridge Approach Slabs shall be considered a Roadway Item.

General Notes:

Design Specifications:
AASHTO - 1996 and Interims thru 2000

Design Unit Stresses:
Class B-1 Concrete (Curb Blockout, Substructure Repair and Deck Repair) f'c = 4,000 psi
Reinforcing Steel (Grade 60, Epoxy Coated) fy = 60,000 psi

Joint Filler:
All joint filler shall meet the requirements of Section 1057.2.4 of the Missouri Standard Specifications, except as noted.

Reinforcing Steel:

Minimum clearance to reinforcing steel shall be 1-1/2", unless otherwise shown.

Bars bonded in old concrete not removed shall be cleanly stripped and embedded into new concrete where possible. If length is available, old bars shall extend into new concrete at least 40 diameters for smooth bars and 30 diameters for deformed bars, unless otherwise noted.

Traffic:
Bridge will be closed to traffic during construction.

Curb Blockouts:
Measurement of Curb Blockout is to the nearest linear foot, measured along outside of slab for left and right curb blockouts. For limits of Curb Blockout, see sheet nos. 8 and 9.

All exposed edges of Curb Blockout shall have $\frac{1}{2}$" radius or $\frac{3}{8}$" bevel unless otherwise shown.

Payment for concrete, reinforcing steel, resin anchors, and any other work incidental to the curb blockouts, complete-in-place, shall be included in the contract unit price for Curb Blockout per linear foot.

Cost of any concrete curb and parapet repair shall be considered completely covered in the contract unit price for Curb Blockout.

All reinforcement shall be epoxy coated.

Existing handrail shall be removed and will be considered the property of the contractor.

Resin Anchors:

The contractor shall use one of the resin anchor systems listed in the Job Special Provisions. These anchor systems shall be installed according to the manufacturer's specifications, except as modified by the Job Special Provisions.

Cost of furnishing and installing the anchor system complete in place shall be included in the contract unit price for Curb Blockout.

The $\frac{5}{8}$" diameter resin anchor systems shall have a minimum ultimate pullout strength of 15,500 lbs. in concrete with f'c = 4,000 psi. (See Special Provisions).

An epoxy coated #5 Grade 60 reinforcing bar shall be substituted for the $\frac{5}{8}$"Ø threaded rod stud. For shape and length of reinforcing bar, see sheet no. 7, 12 and 13.

Miscellaneous:
Outline of old work is indicated by dashed lines. Heavy lines indicate new work.

Contractor shall verify all dimensions in field before ordering new material.

Roadway surfacing adjacent to bridge ends to match bridge overlay.

In order to maintain grade and a minimum thickness of overlay as shown on plans, it may be necessary to use additional quantities of overlay at various locations throughout the structure. No payment will be allowed for additional labor, materials or equipment for variations in thickness of overlay.

Contractor shall verify that bottom slab access doors at bottom of box girders and bottom of slab drains are in working condition and that work in this contract does not impair their function (see original plans for details). Cost shall be considered incidental to other pay items.

FINAL PLANS

I CERTIFY THAT THIS PLAN SHEET ACCURATELY DEPICTS THE CONFIGURATION AND LOCATION OF THE ROADWAY AND ALL ITS APPURTENANT FEATURES, TO THE BEST OF MY KNOWLEDGE, AS I AND MY STAFF HAVE OBSERVED THE CONTRACTOR'S CONSTRUCTION OF THIS PROJECT. I SPECIFICALLY DISCLAIM ANY RESPONSIBILITY FOR THE DESIGN OF THIS PROJECT, EXCEPT AS I AND MY STAFF MAY HAVE MODIFIED OR AUTHORIZED THE MODIFICATION OF THE PROJECT DESIGN DURING ITS CONSTRUCTION; AND I DISCLAIM RESPONSIBILITY FOR THE CONTRACTOR'S ACTUAL CONSTRUCTION OF THE PROJECT, EXCEPT AS I AND MY STAFF MAY HAVE DIRECTED OR ORDERED THAT THE PROJECT BE CONSTRUCTED.

SIGNATURE 4-25-05 DATE

STATE OF MISSOURI
KIRSTEN MUNCK
NUMBER PE-2003001076
PROFESSIONAL ENGINEER

Detailed Mar. 2002
Checked July 2002

Note: This drawing is not to scale. Follow dimensions.

JACKSON COUNTY

A09902

REV.

State	Proj. No.	Sheet No.
MO	J4I0712	B3
021115-407	I-435-1(277)	

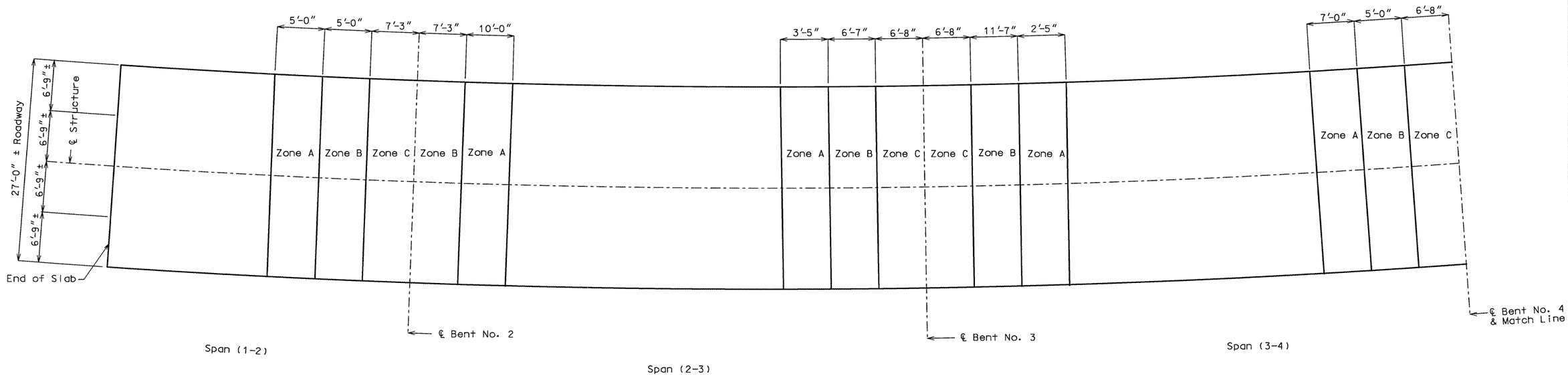

FINAL PLANS

I CERTIFY THAT THIS PLAN SHEET ACCURATELY DEPICTS THE CONFIGURATION AND LOCATION OF THE ROADWAY AND ALL ITS APPURTENANT FEATURES, TO THE BEST OF MY KNOWLEDGE, AS I AND MY STAFF HAVE OBSERVED THE CONTRACTOR'S CONSTRUCTION OF THIS PROJECT. I SPECIFICALLY DISCLAIM ANY RESPONSIBILITY FOR THE DESIGN OF THIS PROJECT, EXCEPT AS I AND MY STAFF MAY HAVE MODIFIED OR AUTHORIZED THE MODIFICATION OF THE PROJECT DESIGN DURING ITS CONSTRUCTION; AND I DISCLAIM RESPONSIBILITY FOR THE CONTRACTOR'S ACTUAL CONSTRUCTION OF THE PROJECT, EXCEPT AS I AND MY STAFF MAY HAVE DIRECTED OR ORDERED THAT THE PROJECT BE CONSTRUCTED.

SIGNATURE 4-25-05 DATE

STATE OF MISSOURI
KIRSTEN MUNCK
NUMBER
PE-2003001076
PROFESSIONAL ENGINEER

Note:

Zones with the same letter designation may be repaired at the same time except for the zones directly adjacent to the centerline of bent. Sequence of repairs follows Zone A, Zone B then Zone C in alphabetical order. If either of the zones adjacent to centerline of bent has a single repair area of over 10 square feet or a total repair area of over 20 square feet, that zone shall be repaired before removing concrete in the other zone of the same designation at that bent.

Any repair in the remainder of the bridge that is within 42" of Zone A shall be completed before removing old concrete in Zone A.

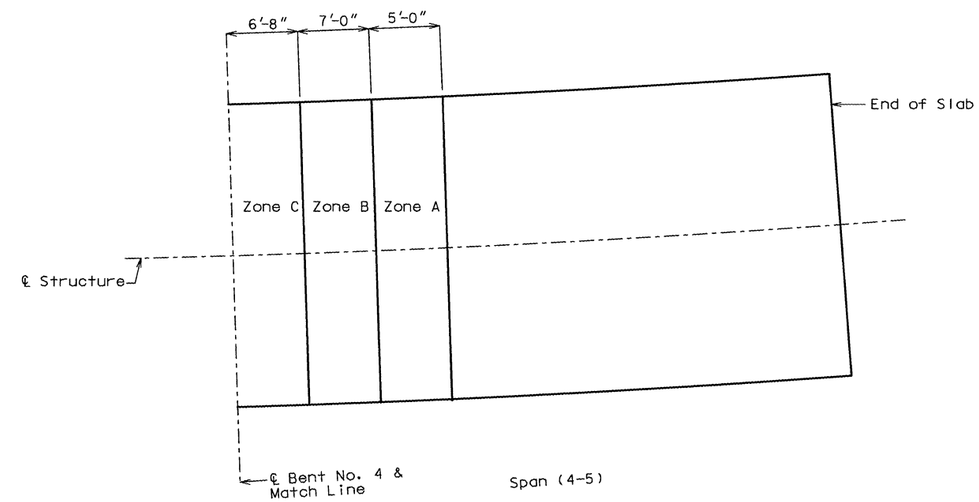

PLAN OF SLAB SHOWING SPECIAL REPAIR ZONES

State	Proj. No.	Sheet No.
MO	J4I0712	B4
021115-407	I-435-1(277)	

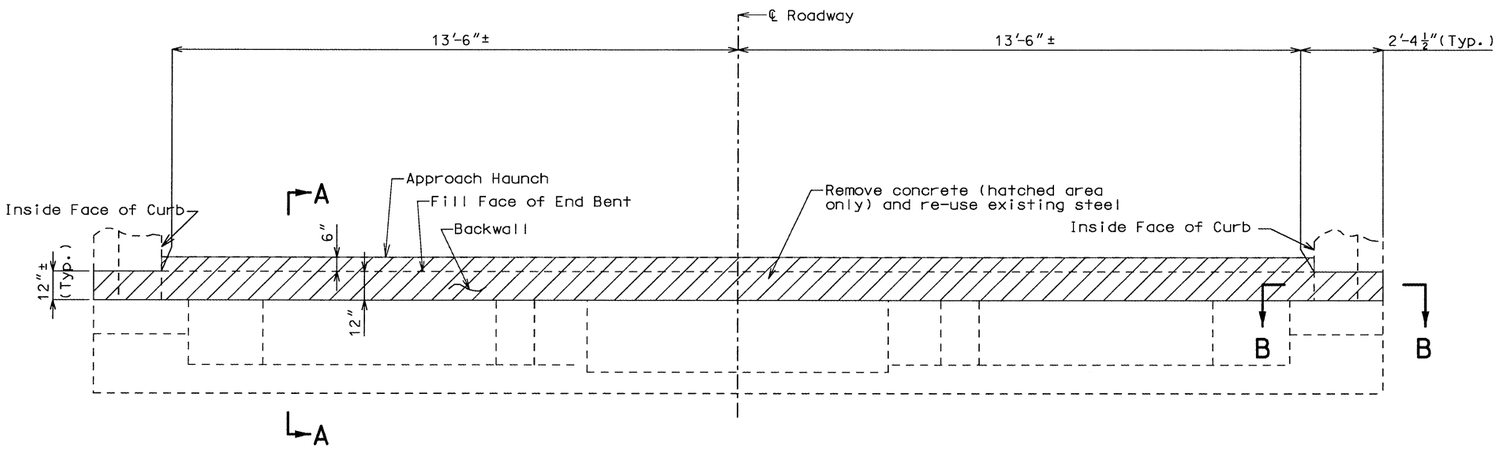

PART PLAN OF END BENT SHOWING EXISTING CONCRETE REMOVAL

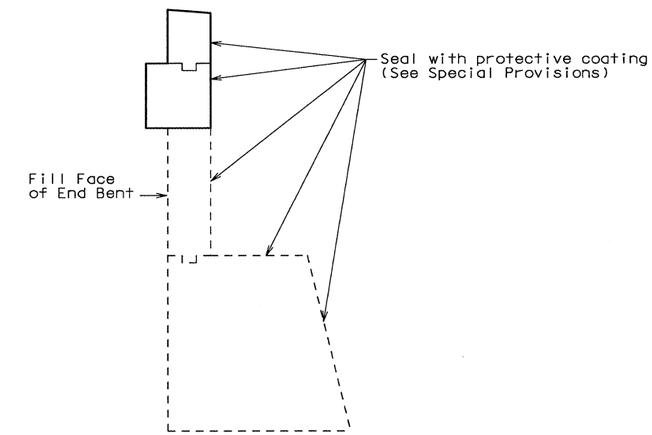

SECTION THRU END BENT
SHOWING PROTECTIVE COATING LIMITS

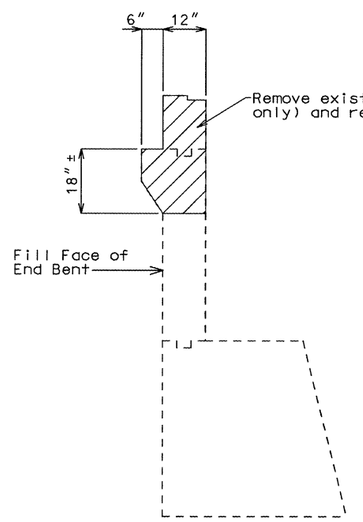

SECTION A-A
(SHOWING EXISTING CONCRETE REMOVAL)

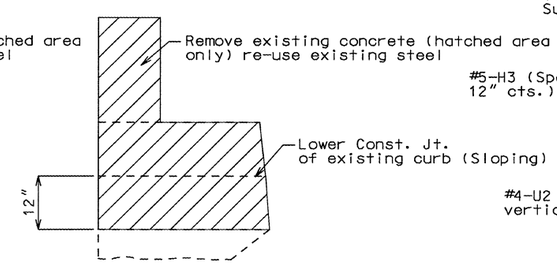

SECTION B-B
(SHOWING EXISTING CONCRETE REMOVAL)

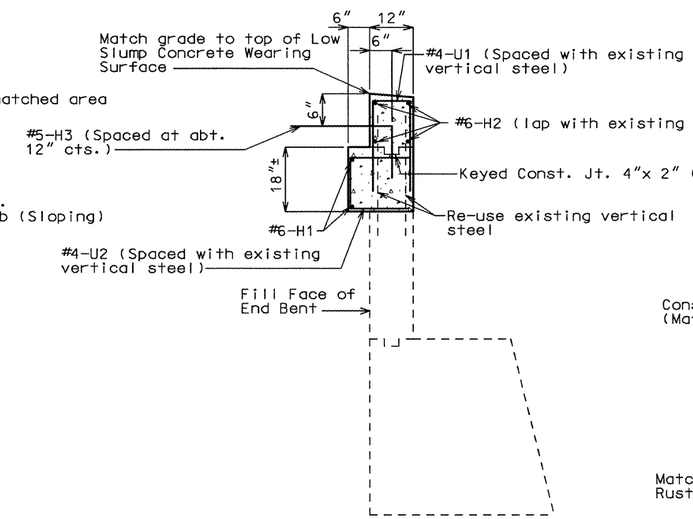

SECTION A-A
(SHOWING CONCRETE REPLACEMENT)

Note: For expansion device placement in backwall, see sheet nos. 5 & 6.

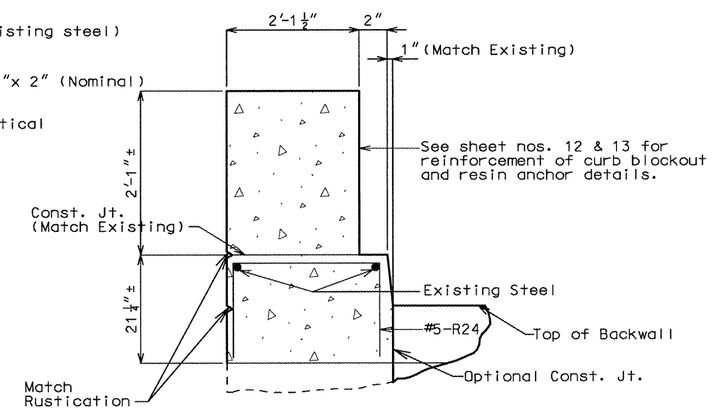

SECTION B-B
(SHOWING CONCRETE REPLACEMENT)

Notes: Concrete for replacement shall be Class B-1.

For details of strip seal expansion device replacement, see sheet nos. 5 and 6.

Payment for removal and replacement of curb and parapets shall be completely covered in the contract unit price for Replacement of Expansion Device and Ajacent Concrete (See Special Provisions).

All new reinforcing steel shall be epoxy coated.

FINAL PLANS

I CERTIFY THAT THIS PLAN SHEET ACCURATELY DEPICTS THE CONFIGURATION AND LOCATION OF THE ROADWAY AND ALL ITS APPURTENANT FEATURES, TO THE BEST OF MY KNOWLEDGE, AS I AND MY STAFF HAVE OBSERVED THE CONTRACTOR'S CONSTRUCTION OF THIS PROJECT. I SPECIFICALLY DISCLAIM ANY RESPONSIBILITY FOR THE DESIGN OF THIS PROJECT, EXCEPT AS I AND MY STAFF MAY HAVE MODIFIED OR AUTHORIZED THE MODIFICATION OF THE PROJECT DESIGN DURING ITS CONSTRUCTION; AND I DISCLAIM RESPONSIBILITY FOR THE CONTRACTOR'S ACTUAL CONSTRUCTION OF THE PROJECT, EXCEPT AS I AND MY STAFF MAY HAVE DIRECTED OR ORDERED THAT THE PROJECT BE CONSTRUCTED.

SIGNATURE 4-25-05 DATE

STATE OF MISSOURI
KIRSTEN MUNCK
4-25-05
NUMBER
PE-2003001076
PROFESSIONAL ENGINEER

TYPICAL DETAILS FOR END BENT NOS. 1 & 5

Detailed Mar. 2002
Checked July 2002

Note: This drawing is not to scale. Follow dimensions.

JACKSON COUNTY A09902

State	Proj. No.	Sheet No.
MO	J4I0712	B5
021115-407	I-435-1(277)	

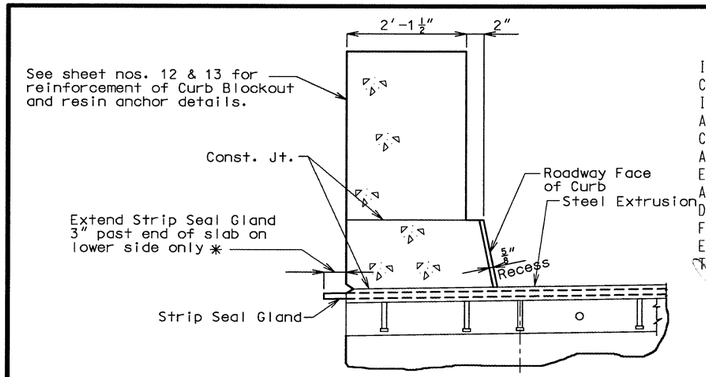

✱Note: Provide splash protection for erosion control on finish ground line if required by the engineer (Roadway Item).

PART SECTION D-D

FINAL PLANS

I CERTIFY THAT THIS PLAN SHEET ACCURATELY DEPICTS THE CONFIGURATION AND LOCATION OF THE ROADWAY AND ALL ITS APPURTENANT FEATURES, TO THE BEST OF MY KNOWLEDGE, AS I AND MY STAFF HAVE OBSERVED THE CONTRACTOR'S CONSTRUCTION OF THIS PROJECT. I SPECIFICALLY DISCLAIM ANY RESPONSIBILITY FOR THE DESIGN OF THIS PROJECT, EXCEPT AS I AND MY STAFF MAY HAVE MODIFIED OR AUTHORIZED THE MODIFICATION OF THE PROJECT DESIGN DURING ITS CONSTRUCTION; AND I DISCLAIM RESPONSIBILITY FOR THE CONTRACTOR'S ACTUAL CONSTRUCTION OF THE PROJECT, EXCEPT AS I AND MY STAFF MAY HAVE DIRECTED OR ORDERED THAT THE PROJECT BE CONSTRUCTED.

SIGNATURE 4-25-05 DATE

STATE OF MISSOURI
KIRSTEN MUNCK
4-25-05
NUMBER PE-2003001076
PROFESSIONAL ENGINEER

DETAIL OF GLAND

Note: Use single layer gland, no multiple layer glands allowed.
Strip seal gland size = 4"

STRIP SEAL GLAND

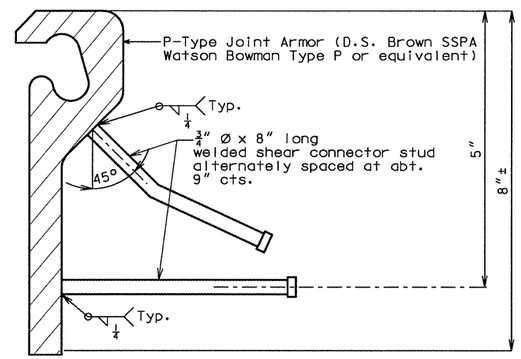

DETAIL OF STEEL EXTRUSION IN BACKWALL OF END BENT

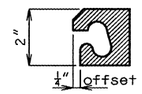

DETAIL OF STEEL EXTRUSION ON EXISTING SLAB

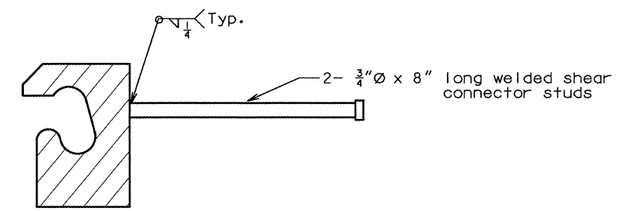

Note: Shift existing reinforcement in curb to clear studs.

PART SECTION F-F

NOTE:

The expansion device shall be fabricated and installed in accordance with the recommendations of the manufacturer, and as set forth in the Special Provisions.

The contractor shall verify all dimensions prior to fabrication.

Splices of steel extrusion shall develop full strength.

All steel shall be ASTM A709 Grade 36, except steel extrusions shall be ASTM A709 Grade 50W or Grade 36.

Neoprene Strip Seal shall meet ASTM D-2628.

Anchors for the extrusions or armor shall be approved welded studs (C1010 thru C1020).

All welds shall conform to Section 712 of the Missouri Standard Specifications.

Concrete shall be forced under and around strip seal extrusions and studs. Proper consolidation of the concrete shall be achieved by localized internal vibration.

Plan dimensions are based on installation at 60°F. The gap shall be increased 1/16" for each 10° fall in temperature and decreased 1/16" for each 10° rise in temperature from the installation temperature.

Longitudinal reinforcing steel shall be placed so that ends shall not be more than 1"± from vertical leg of extrusion at Expansion Device.

Structural steel for the expansion device shall be coated with a minimum of two coats of inorganic zinc primer (5 mils minimum). Anchors need not be protected from overspray.

Payment for furnishing, coating and placing steel extrusions, miscellaneous structural steel, and neoprene strip seal shall be made under the contract unit price for Strip Seal Expansion Joint System per lin. ft.

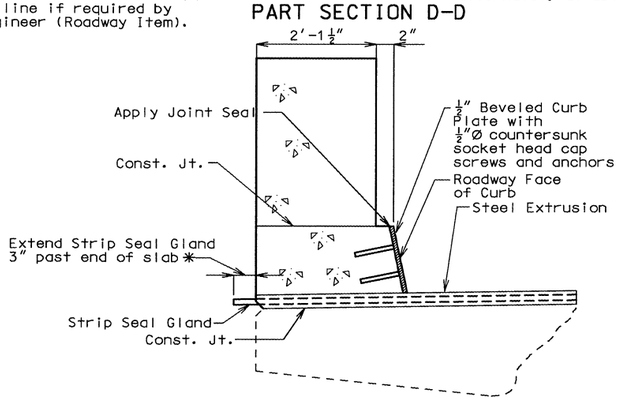

PART SECTION E-E (SHOWING CONCRETE REPLACEMENT)

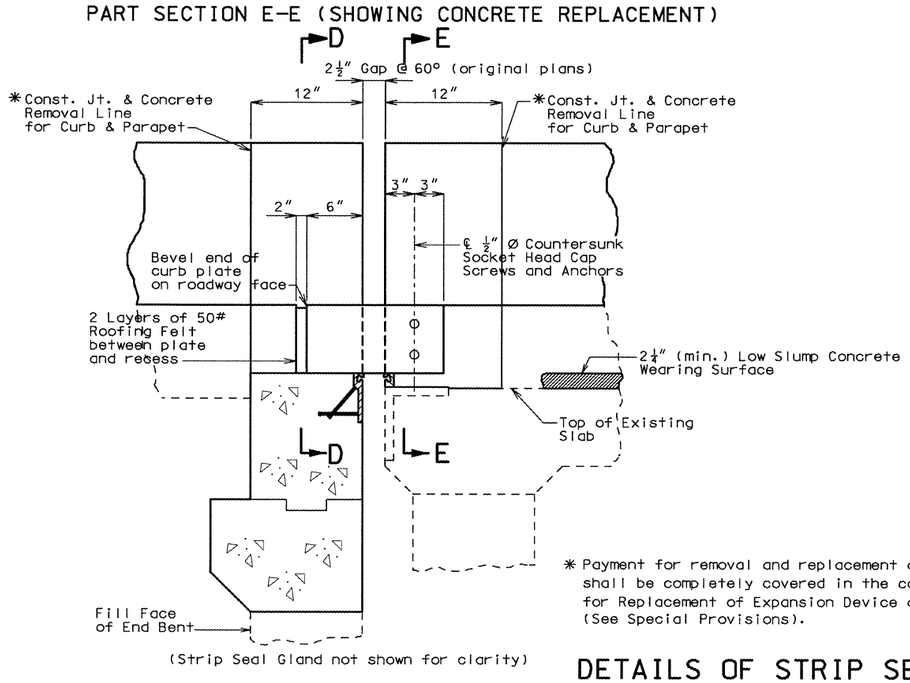

(Strip Seal Gland not shown for clarity)

PART SECTION B-B

✱ Payment for removal and replacement of curb and parapets shall be completely covered in the contract unit price for Replacement of Expansion Device and Adjacent Concrete (See Special Provisions).

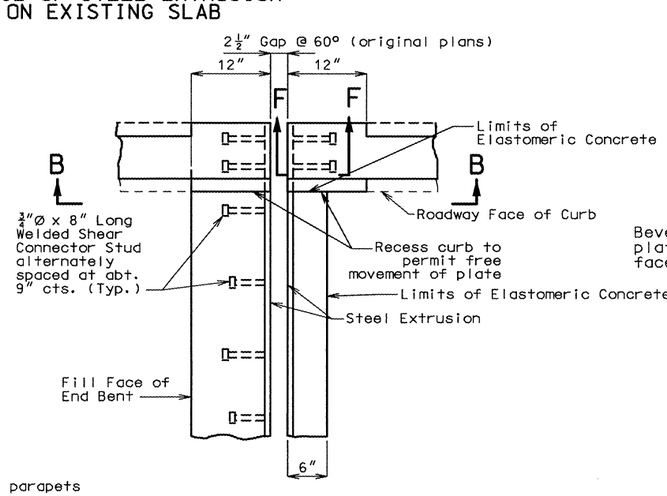

PART PLAN

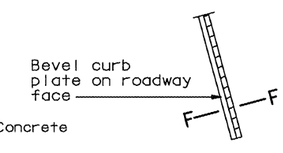

AT END OF BEVELED CURB PLATE

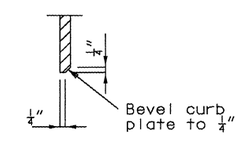

SECTION F-F

DETAILS OF STRIP SEAL EXPANSION DEVICE REPLACEMENT AT END BENTS

Detailed Apr. 2002
Checked July 2002

Sheet No. 5 of 15

JACKSON COUNTY

A09902

State	Proj. No.	Sheet No.
MO	J4I0712	B6
021115-407	I-435-1(277)	

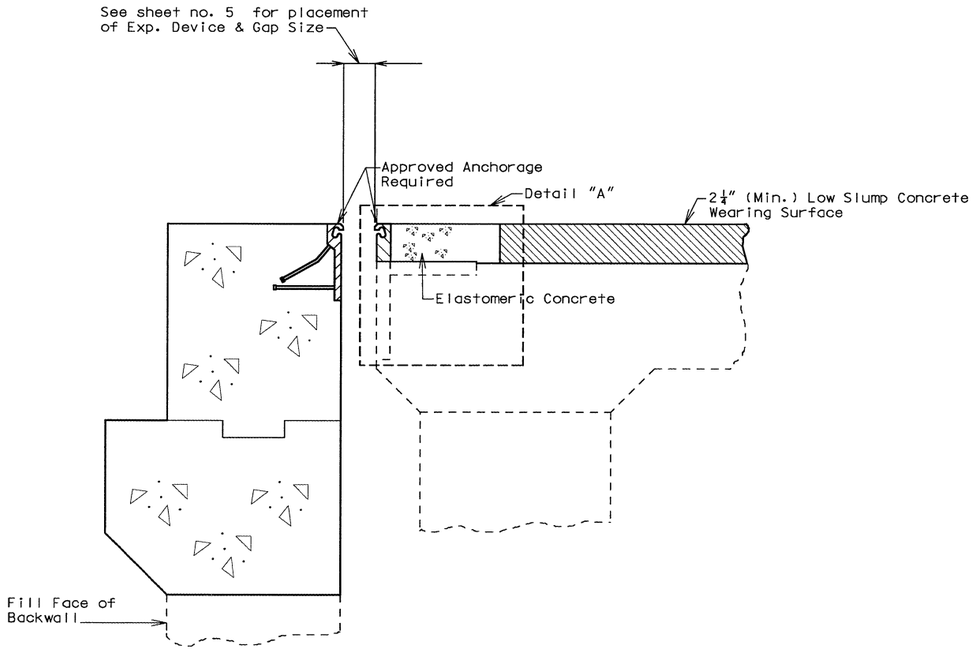

PART SECTION THRU END OF SLAB AT BENT NO. 1

Note: Bent No. 5 similar.

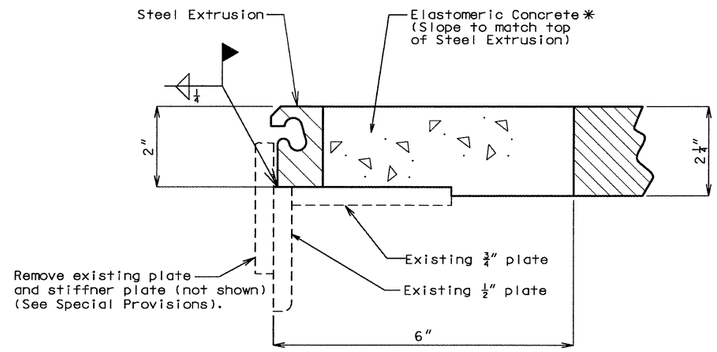

DETAIL "A"

✱ Submit manufacturer's specifications and installation requirements to the engineer for approval.

STATE OF MISSOURI
KIRSTEN MUNCK
4-25-05
NUMBER
PE-2003001076
PROFESSIONAL ENGINEER

FINAL PLANS

I CERTIFY THAT THIS PLAN SHEET ACCURATELY DEPICTS THE CONFIGURATION AND LOCATION OF THE ROADWAY AND ALL ITS APPURTENANT FEATURES, TO THE BEST OF MY KNOWLEDGE, AS I AND MY STAFF HAVE OBSERVED THE CONTRACTOR'S CONSTRUCTION OF THIS PROJECT. I SPECIFICALLY DISCLAIM ANY RESPONSIBILITY FOR THE DESIGN OF THIS PROJECT, EXCEPT AS I AND MY STAFF MAY HAVE MODIFIED OR AUTHORIZED THE MODIFICATION OF THE PROJECT DESIGN DURING ITS CONSTRUCTION; AND I DISCLAIM RESPONSIBILITY FOR THE CONTRACTOR'S ACTUAL CONSTRUCTION OF THE PROJECT, EXCEPT AS I AND MY STAFF MAY HAVE DIRECTED OR ORDERED THAT THE PROJECT BE CONSTRUCTED.

SIGNATURE 4-25-05 DATE

DETAILS OF STRIP SEAL EXPANSION DEVICE AT END BENTS

Detailed Apr. 2002
Checked July 2002

Note: This drawing is not to scale. Follow dimensions.

JACKSON COUNTY A09902 REV.

J:\PROJECTS\J4I0712\MicroStation\Bridge\J4I0712\A09902\a09902_006.dgn 01:40:30 PM 02/25/2005

STATE	PROJ. NO.	SHEET NO.
MO	J4I0712	B7
021115-407	I-435-1(277)	

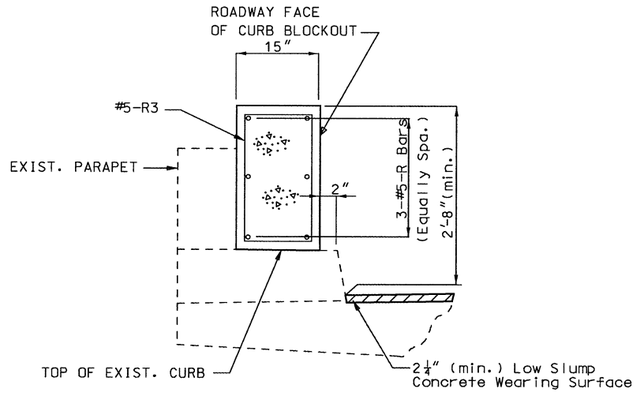

TYPICAL SECTION THRU CURB
BLOCKOUT SHOWING REINFORCEMENT

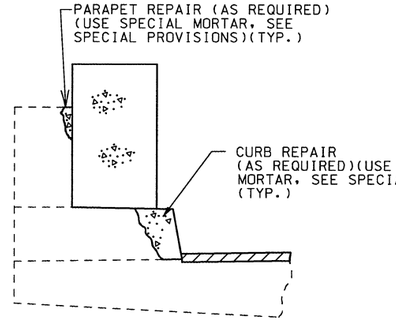

TYPICAL SECTION THRU CURB BLOCKOUT
SHOWING CONCRETE CURB & PARAPET REPAIR

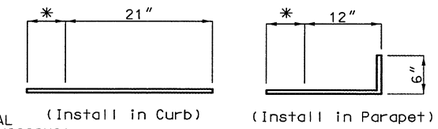

DETAILS OF RESIN ANCHORS
AT 15" CURB BLOCKOUTS

* Manufacturer's embedment depth but no greater than 5" in Exist. Parapet and no greater than 7" in Exist. Curb (4" over curb outlets).

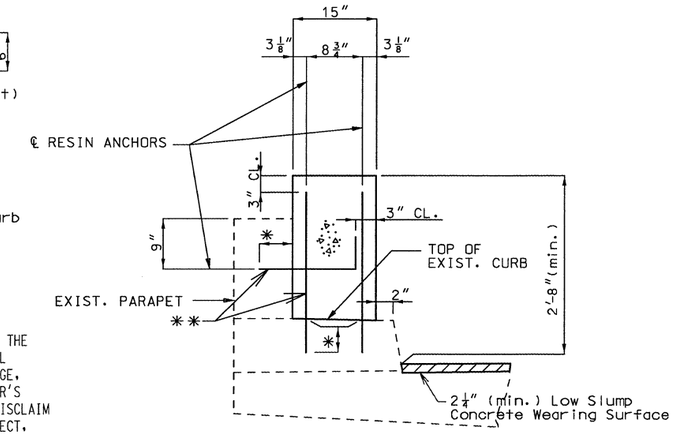

TYPICAL SECTION THRU CURB
BLOCKOUT SHOWING RESIN ANCHORS

FINAL PLANS

I CERTIFY THAT THIS PLAN SHEET ACCURATELY DEPICTS THE CONFIGURATION AND LOCATION OF THE ROADWAY AND ALL ITS APPURTENANT FEATURES, TO THE BEST OF MY KNOWLEDGE, AS I AND MY STAFF HAVE OBSERVED THE CONTRACTOR'S CONSTRUCTION OF THIS PROJECT. I SPECIFICALLY DISCLAIM ANY RESPONSIBILITY FOR THE DESIGN OF THIS PROJECT, EXCEPT AS I AND MY STAFF MAY HAVE MODIFIED OR AUTHORIZED THE MODIFICATION OF THE PROJECT DESIGN DURING ITS CONSTRUCTION; AND I DISCLAIM RESPONSIBILITY FOR THE CONTRACTOR'S ACTUAL CONSTRUCTION OF THE PROJECT, EXCEPT AS I AND MY STAFF MAY HAVE DIRECTED OR ORDERED THAT THE PROJECT BE CONSTRUCTED.

SIGNATURE 4-25-05 DATE

STATE OF MISSOURI
KIRSTEN MUNCK
4-25-05
NUMBER
PE-2003001076
PROFESSIONAL ENGINEER

** Resin anchors spaced with alternating pattern at abt. 12" cts.

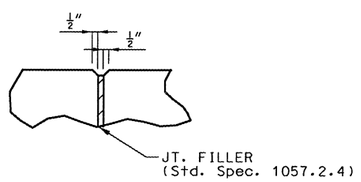

FILLED JOINT DETAIL

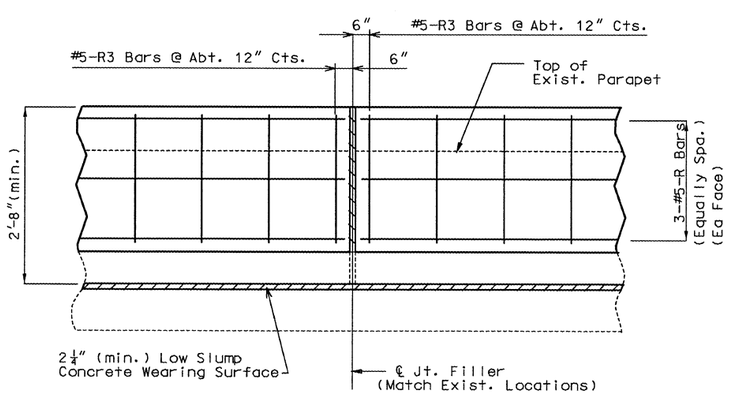

PART ELEVATION OF CURB BLOCKOUT SHOWING REINFORCEMENT

NOTES FOR CURB BLOCKOUT:

Concrete in curb blockout shall be Class B-1.

Measurement of the concrete Curb Blockout is to the nearest linear foot, measured along the inside face of existing parapet from end of wing to end of wing.

All exposed edges of curb blockout shall have ½" radius or ⅜" bevel unless otherwise shown.

Payment for concrete, reinforcing steel, resin anchors and any other work incidental to the curb blockout complete in place shall be included in the contract unit price for Curb Blockout.

Cost of any concrete curb & parapet repair shall be considered completely covered in the contract unit price for Curb Blockout.

Use a minimum lap of 3'-0" for #5 horizontal Curb Blockout bars where necessary.

The cross-sectional area of the Curb Blockout above top of existing curb = 2.59± sq. ft.

Provide or maintain access to existing active conduit systems and junction boxes.

Shift reinforcing steel in field where necessary to clear access openings for existing active junction boxes and conduit systems.

Match locations of existing filled joints.

Longitudinal reinforcing steel shall be field cut to required length between filled joints.

All reinforcing shall be epoxy coated.

Contractor shall prevent damage to existing conduit at light support standards and elsewhere on bridge (See Special Provisions).

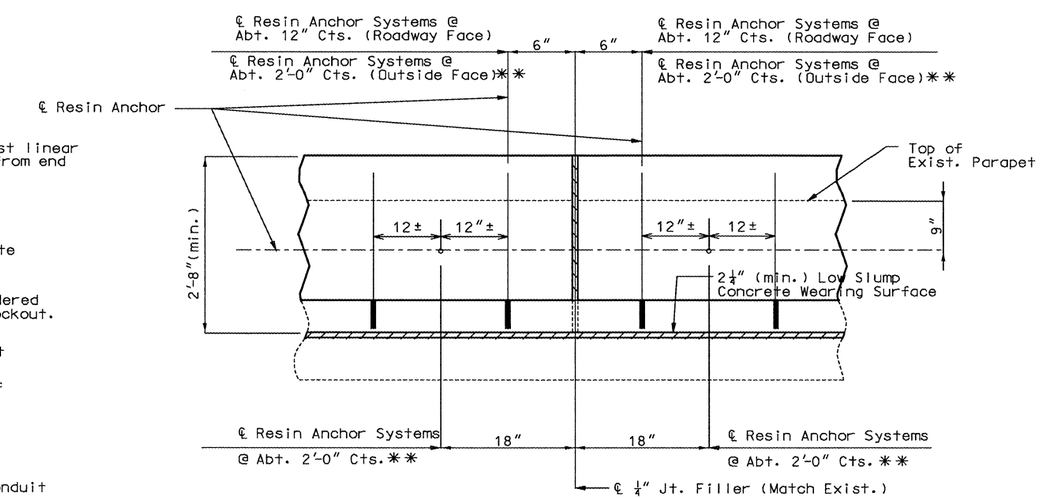

PART SECTION OF CURB BLOCKOUT SHOWING RESIN ANCHORS

DETAILED Mar. 2002
CHECKED July 2002

TYPICAL DETAILS OF CURB BLOCKOUT

NOTE: THIS DRAWING IS NOT TO SCALE. FOLLOW DIMENSIONS.

SHEET NO. 7 OF 15

JACKSON COUNTY

A09902

STATE	PROJ. NO.	SHEET NO.
MO	J4I0712	B8
021115-407	I-435-1(277)	

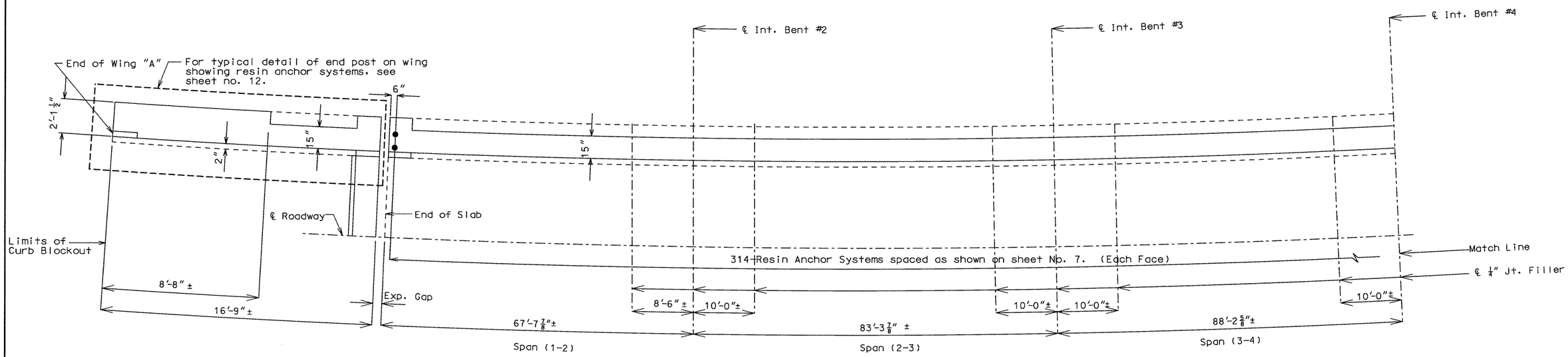

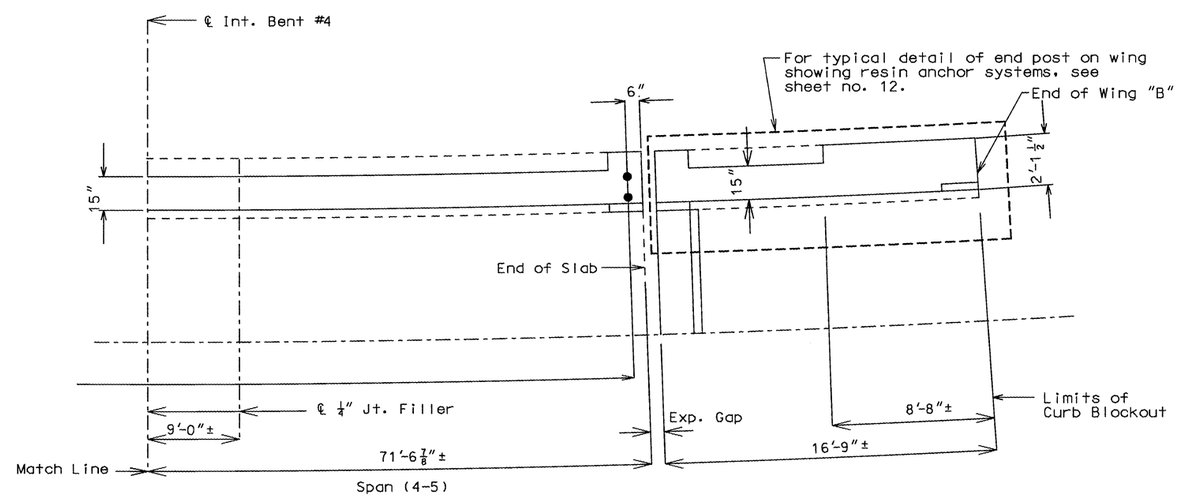

Note: Longitudinal dimensions shown are along ℄ parapet.
Match existing curb joints.
For details of resin anchor systems not shown, see sheet no. 7.

FINAL PLANS

I CERTIFY THAT THIS PLAN SHEET ACCURATELY DEPICTS THE CONFIGURATION AND LOCATION OF THE ROADWAY AND ALL ITS APPURTENANT FEATURES, TO THE BEST OF MY KNOWLEDGE, AS I AND MY STAFF HAVE OBSERVED THE CONTRACTOR'S CONSTRUCTION OF THIS PROJECT. I SPECIFICALLY DISCLAIM ANY RESPONSIBILITY FOR THE DESIGN OF THIS PROJECT, EXCEPT AS I AND MY STAFF MAY HAVE MODIFIED OR AUTHORIZED THE MODIFICATION OF THE PROJECT DESIGN DURING ITS CONSTRUCTION; AND I DISCLAIM RESPONSIBILITY FOR THE CONTRACTOR'S ACTUAL CONSTRUCTION OF THE PROJECT, EXCEPT AS I AND MY STAFF MAY HAVE DIRECTED OR ORDERED THAT THE PROJECT BE CONSTRUCTED.

SIGNATURE 4-25-05 DATE

STATE OF MISSOURI
KIRSTEN MUNCK
4-25-05
NUMBER PE-2003001076
PROFESSIONAL ENGINEER

PLAN OF LEFT CURB BLOCKOUT SHOWING RESIN ANCHOR SPACING

DETAILED Mar. 2002
CHECKED July 2002

NOTE: THIS DRAWING IS NOT TO SCALE. FOLLOW DIMENSIONS.

SHEET NO. 8 OF 15.

JACKSON COUNTY

A09902

STATE	PROJ. NO.	SHEET NO.
MO	J4I0712	B9
021115-407	I-435-1(277)	

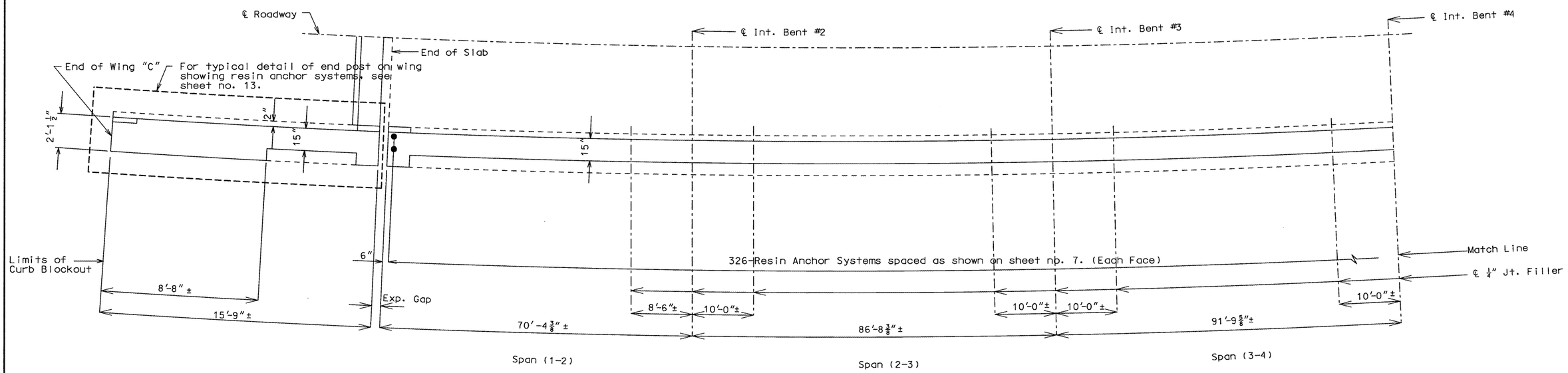

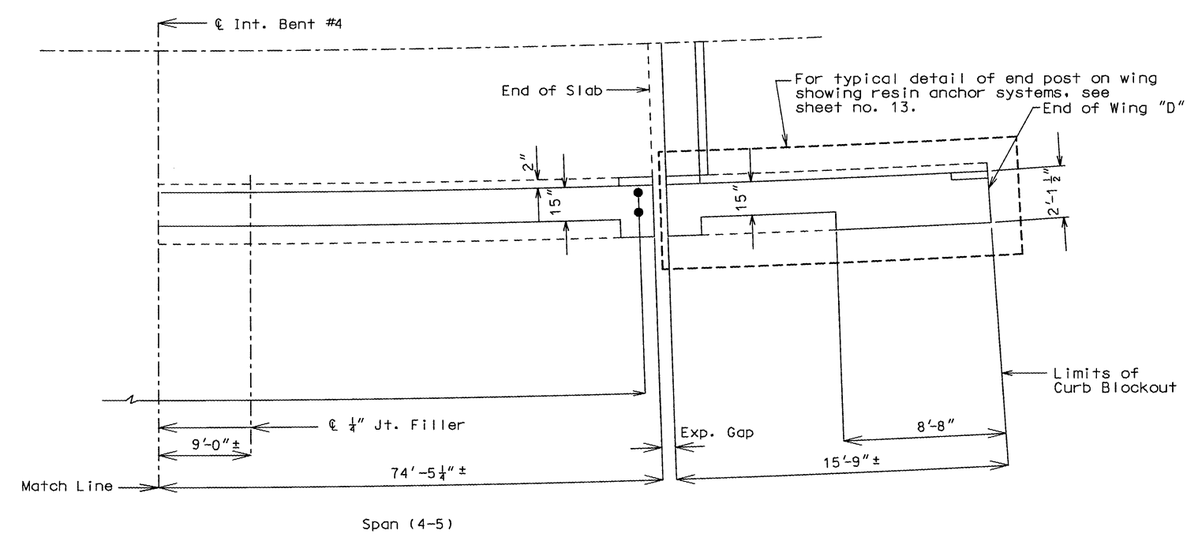

Note: Longitudinal dimensions shown are along ℄ parapet.
Match existing curb joints.
For details of resin anchor systems not shown see sheet no. 7.

FINAL PLANS

I CERTIFY THAT THIS PLAN SHEET ACCURATELY DEPICTS THE CONFIGURATION AND LOCATION OF THE ROADWAY AND ALL ITS APPURTENANT FEATURES, TO THE BEST OF MY KNOWLEDGE, AS I AND MY STAFF HAVE OBSERVED THE CONTRACTOR'S CONSTRUCTION OF THIS PROJECT. I SPECIFICALLY DISCLAIM ANY RESPONSIBILITY FOR THE DESIGN OF THIS PROJECT, EXCEPT AS I AND MY STAFF MAY HAVE MODIFIED OR AUTHORIZED THE MODIFICATION OF THE PROJECT DESIGN DURING ITS CONSTRUCTION; AND I DISCLAIM RESPONSIBILITY FOR THE CONTRACTOR'S ACTUAL CONSTRUCTION OF THE PROJECT, EXCEPT AS I AND MY STAFF MAY HAVE DIRECTED OR ORDERED THAT THE PROJECT BE CONSTRUCTED.

SIGNATURE 4-25-05 DATE

STATE OF MISSOURI
KIRSTEN MUNCK
4-25-05
NUMBER PE-2003001076
PROFESSIONAL ENGINEER

PLAN OF RIGHT CURB BLOCKOUT SHOWING RESIN ANCHOR SPACING

STATE	PROJ. NO.	SHEET NO.
MO	J4I0712	B10
021115-407	I-435-1(277)	

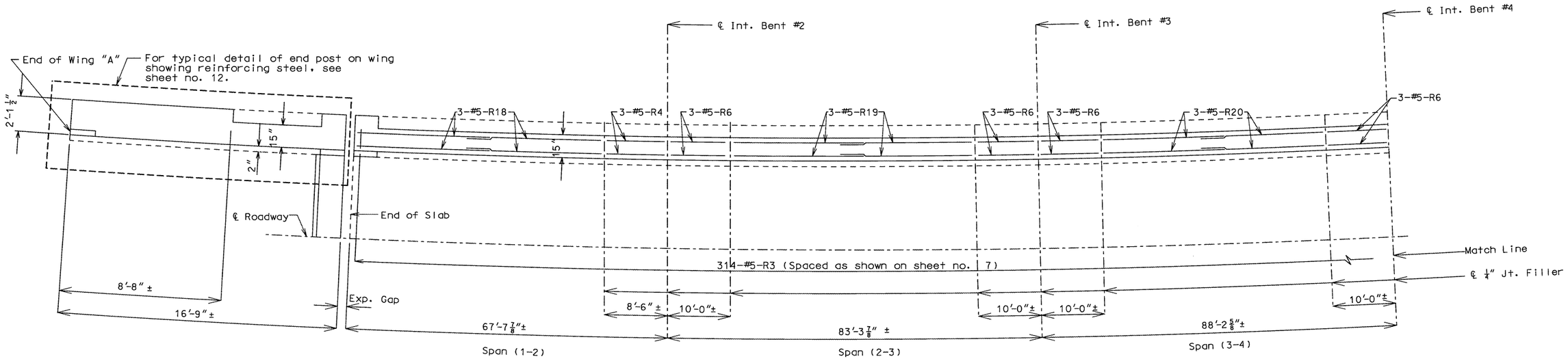

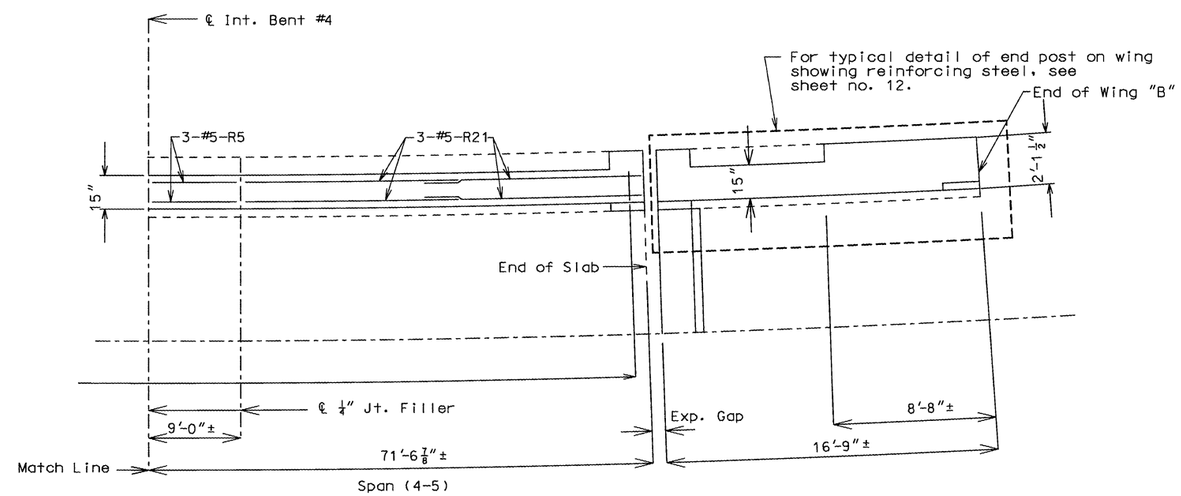

FINAL PLANS

I CERTIFY THAT THIS PLAN SHEET ACCURATELY DEPICTS THE CONFIGURATION AND LOCATION OF THE ROADWAY AND ALL ITS APPURTENANT FEATURES, TO THE BEST OF MY KNOWLEDGE, AS I AND MY STAFF HAVE OBSERVED THE CONTRACTOR'S CONSTRUCTION OF THIS PROJECT. I SPECIFICALLY DISCLAIM ANY RESPONSIBILITY FOR THE DESIGN OF THIS PROJECT, EXCEPT AS I AND MY STAFF MAY HAVE MODIFIED OR AUTHORIZED THE MODIFICATION OF THE PROJECT DESIGN DURING ITS CONSTRUCTION; AND I DISCLAIM RESPONSIBILITY FOR THE CONTRACTOR'S ACTUAL CONSTRUCTION OF THE PROJECT, EXCEPT AS I AND MY STAFF MAY HAVE DIRECTED OR ORDERED THAT THE PROJECT BE CONSTRUCTED.

SIGNATURE 4-25-05 DATE

STATE OF MISSOURI
KIRSTEN MUNCK
NUMBER PE-2003001076
PROFESSIONAL ENGINEER

Note: Longitudinal dimensions shown are along parapet.
Match existing curb joints.
For details of reinforcing steel not shown see sheet no. 7.
Use a minimum lap of 3'-0" for #5-R horizontal curb blockout bars.

PLAN OF LEFT CURB BLOCKOUT SHOWING REINFORCING STEEL

STATE	PROJ. NO.	SHEET NO.
MO	J4I0712	B11
021115-407	I-435-1(277)	

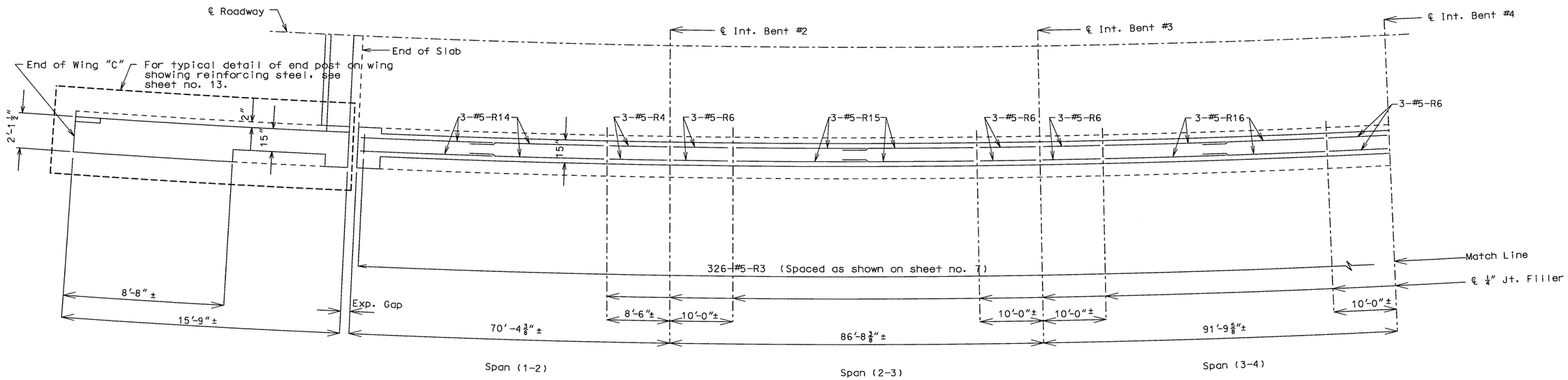

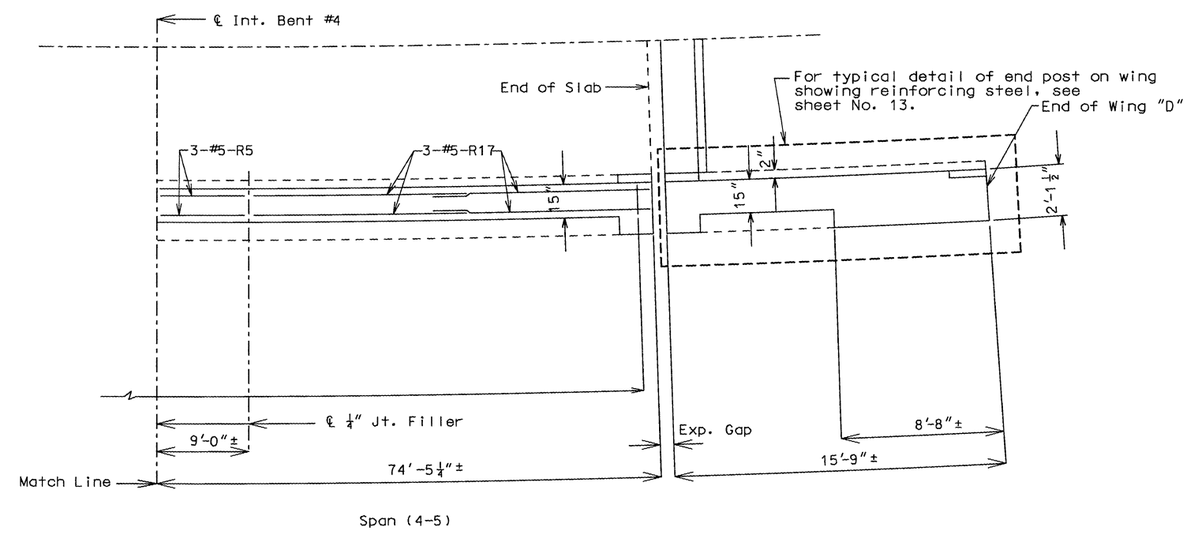

Note: Longitudinal dimensions shown are along ℄ parapet.
Match existing curb joints.
For details of reinforcing steel not shown see sheet no. 7.
Use a minimum lap of 3'-0" for #5-R horizontal curb blockout bars.

PLAN OF RIGHT CURB BLOCKOUT SHOWING REINFORCING STEEL

FINAL PLANS

I CERTIFY THAT THIS PLAN SHEET ACCURATELY DEPICTS THE CONFIGURATION AND LOCATION OF THE ROADWAY AND ALL ITS APPURTENANT FEATURES, TO THE BEST OF MY KNOWLEDGE, AS I AND MY STAFF HAVE OBSERVED THE CONTRACTOR'S CONSTRUCTION OF THIS PROJECT. I SPECIFICALLY DISCLAIM ANY RESPONSIBILITY FOR THE DESIGN OF THIS PROJECT, EXCEPT AS I AND MY STAFF MAY HAVE MODIFIED OR AUTHORIZED THE MODIFICATION OF THE PROJECT DESIGN DURING ITS CONSTRUCTION; AND I DISCLAIM RESPONSIBILITY FOR THE CONTRACTOR'S ACTUAL CONSTRUCTION OF THE PROJECT, EXCEPT AS I AND MY STAFF MAY HAVE DIRECTED OR ORDERED THAT THE PROJECT BE CONSTRUCTED.

SIGNATURE 4/25/05 DATE

STATE OF MISSOURI
KIRSTEN MUNCK
NUMBER PE-2003001076
PROFESSIONAL ENGINEER

DETAILED MAR. 2002
CHECKED July 2002

NOTE: THIS DRAWING IS NOT TO SCALE. FOLLOW DIMENSIONS.

SHEET NO. 11 OF 15.

JACKSON COUNTY

A09902

STATE	PROJ. NO.	SHEET NO.
MO	J4I0712	B12
021115-407	I-435-1(277)	

FINAL PLANS

I CERTIFY THAT THIS PLAN SHEET ACCURATELY DEPICTS THE CONFIGURATION AND LOCATION OF THE ROADWAY AND ALL ITS APPURTENANT FEATURES, TO THE BEST OF MY KNOWLEDGE, AS I AND MY STAFF HAVE OBSERVED THE CONTRACTOR'S CONSTRUCTION OF THIS PROJECT. I SPECIFICALLY DISCLAIM ANY RESPONSIBILITY FOR THE DESIGN OF THIS PROJECT, EXCEPT AS I AND MY STAFF MAY HAVE MODIFIED OR AUTHORIZED THE MODIFICATION OF THE PROJECT DESIGN DURING ITS CONSTRUCTION; AND I DISCLAIM RESPONSIBILITY FOR THE CONTRACTOR'S ACTUAL CONSTRUCTION OF THE PROJECT, EXCEPT AS I AND MY STAFF MAY HAVE DIRECTED OR ORDERED THAT THE PROJECT BE CONSTRUCTED.

SIGNATURE 4-25-05 DATE

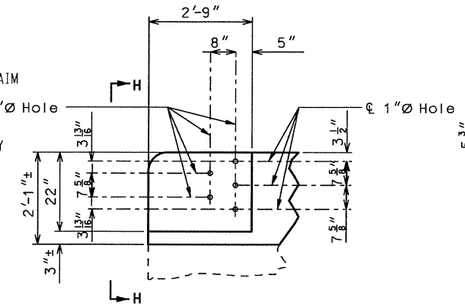

PART ELEVATION

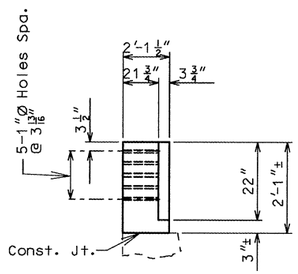

PART ELEVATION H-H

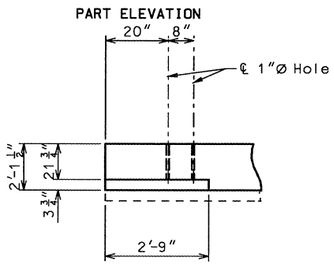

PART PLAN

DETAILS OF GUARD RAIL ATTACHMENT
(WING "A" ONLY)

Note:
Wing "B" is similar except 1" Ø Holes are not required.

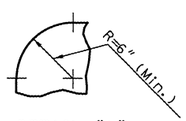

DETAIL "A"

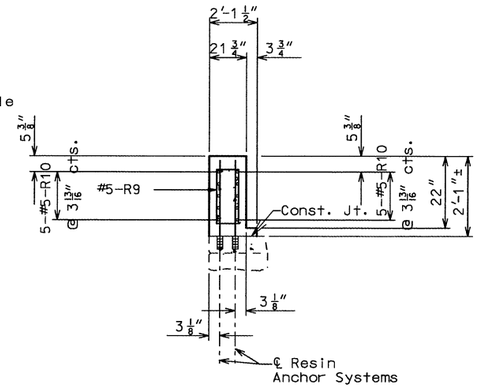

SECTION E-E

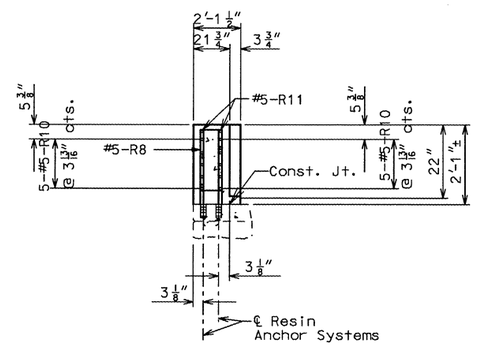

SECTION F-F

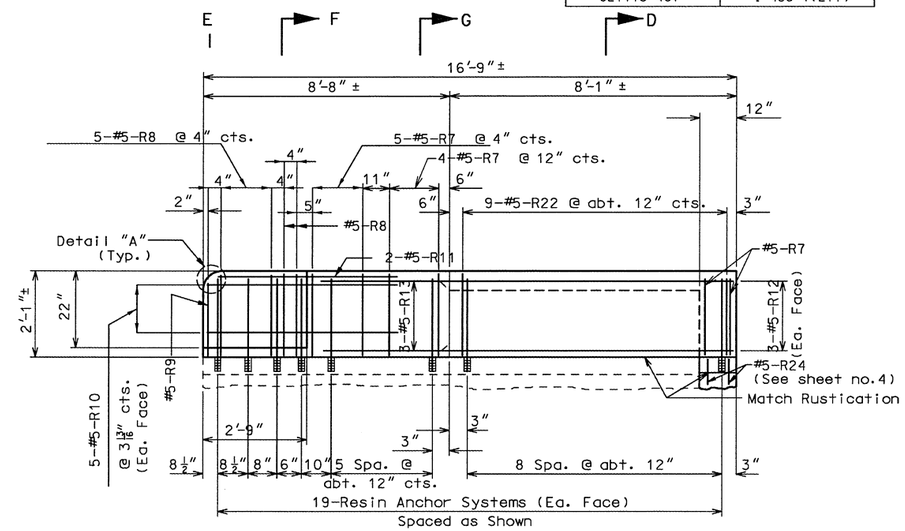

ELEVATION OF NEW END POST
ON WING

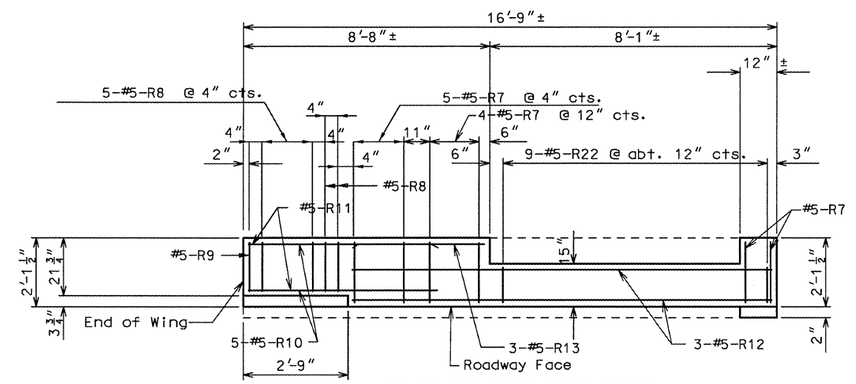

PLAN OF NEW END POST
ON WING

Note: Resin anchors not shown in plan for clarity.

✱ As shown on sheet no. 7 (Typ.)

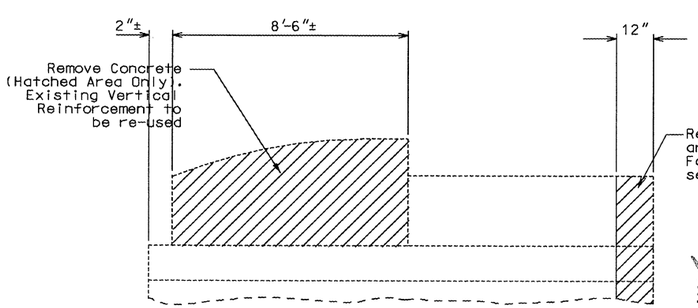

ELEVATION OF EXISTING END
POST SHOWING CONCRETE REMOVAL

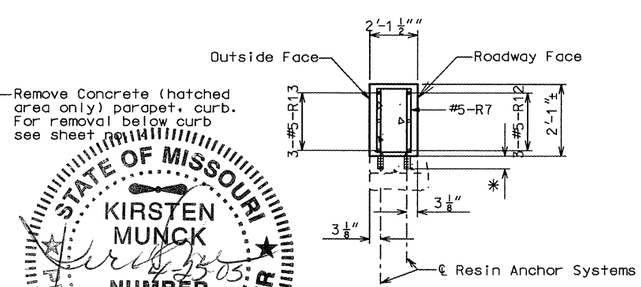

SECTION G-G

STATE OF MISSOURI
KIRSTEN MUNCK
NUMBER PE-2003001076
PROFESSIONAL ENGINEER

①Use alternating resin anchors in existing parapet & curb as shown on sheet no. 7.

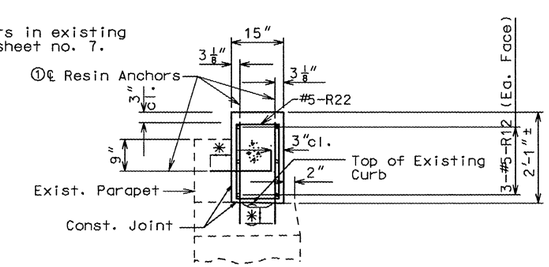

SECTION D-D

Note: For correct orientation, see sheet no. 10.

TYPICAL DETAILS OF END POST BLOCKOUT ON WING "A" & "B"

DETAILED MAR. 2002
CHECKED July 2002

NOTE: THIS DRAWING IS NOT TO SCALE. FOLLOW DIMENSIONS.

SHEET NO. 12 OF 15

JACKSON COUNTY

A09902

STATE	PROJ. NO.	SHEET NO.
MO	J4I0712	B13
021115-407	I-435-1(277)	

FINAL PLANS

I CERTIFY THAT THIS PLAN SHEET ACCURATELY DEPICTS THE CONFIGURATION AND LOCATION OF THE ROADWAY AND ALL ITS APPURTENANT FEATURES, TO THE BEST OF MY KNOWLEDGE, AS I AND MY STAFF HAVE OBSERVED THE CONTRACTOR'S CONSTRUCTION OF THIS PROJECT. I SPECIFICALLY DISCLAIM ANY RESPONSIBILITY FOR THE DESIGN OF THIS PROJECT, EXCEPT AS I AND MY STAFF MAY HAVE MODIFIED OR AUTHORIZED THE MODIFICATION OF THE PROJECT DESIGN DURING ITS CONSTRUCTION; AND I DISCLAIM RESPONSIBILITY FOR THE CONTRACTOR'S ACTUAL CONSTRUCTION OF THE PROJECT, EXCEPT AS I AND MY STAFF MAY HAVE DIRECTED OR ORDERED THAT THE PROJECT BE CONSTRUCTED.

SIGNATURE 4-25-05 DATE

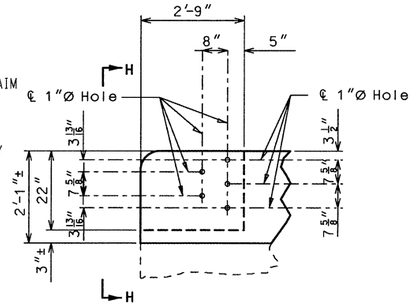

PART ELEVATION

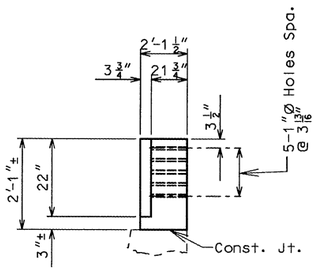

PART ELEVATION H-H

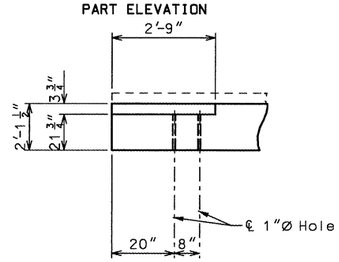

PART PLAN

DETAILS OF GUARD RAIL ATTACHMENT (BOTH WINGS)

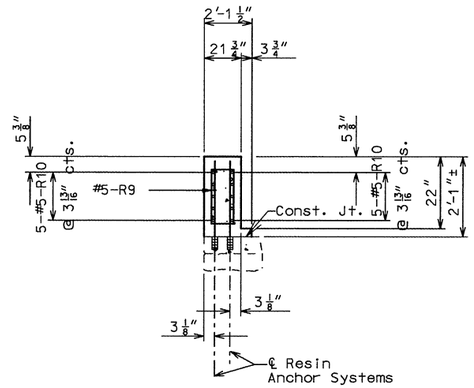

SECTION E-E

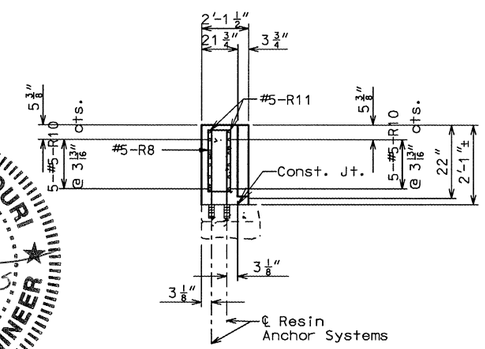

SECTION F-F

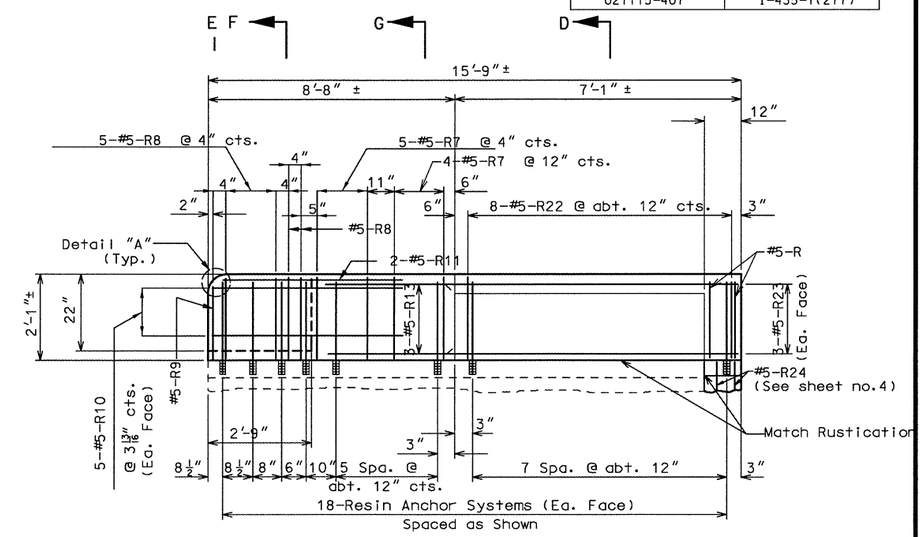

ELEVATION OF NEW END POST ON WING

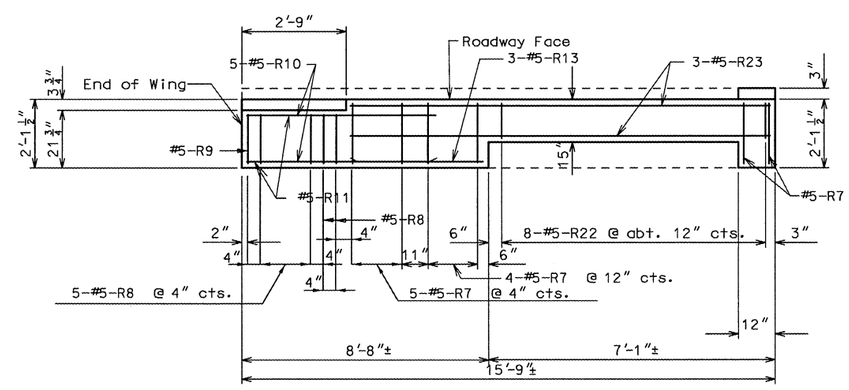

PLAN OF NEW END POST ON WING

Note: Resin anchors not shown in plan for clarity.

✱ As shown on sheet no. 7 (Typ.)

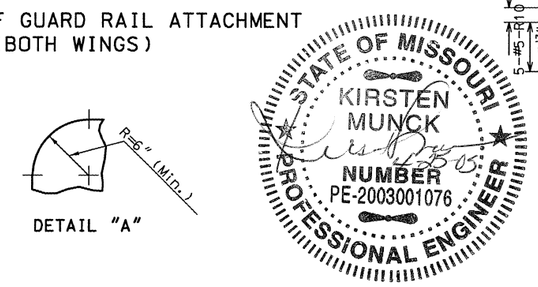

DETAIL "A"

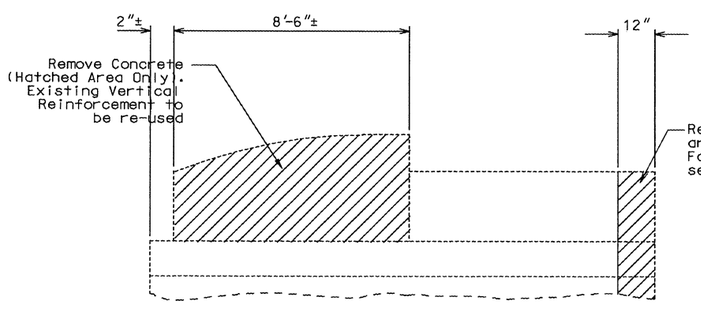

ELEVATION OF EXISTING END POST SHOWING CONCRETE REMOVAL

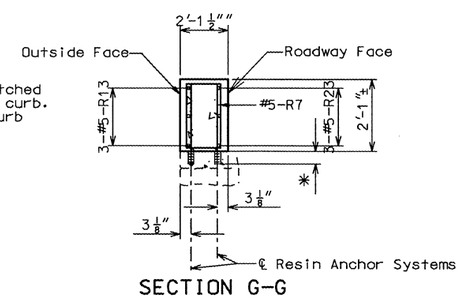

SECTION G-G

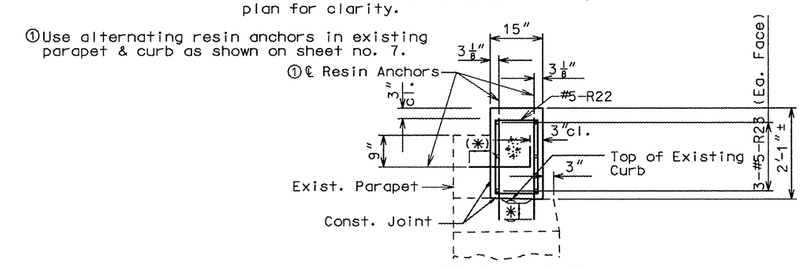

SECTION D-D

①Use alternating resin anchors in existing parapet & curb as shown on sheet no. 7.

Note: For correct orientation, see sheet no. 11.

TYPICAL DETAILS OF END POST BLOCKOUT ON WING "C" & "D"

DETAILED MAR. 2002
CHECKED July 2002

NOTE: THIS DRAWING IS NOT TO SCALE. FOLLOW DIMENSIONS.

SHEET NO. 13 OF 15

JACKSON COUNTY

A09902

State	Proj. No.	Sheet No.
MO	J4I0712	B14
021115-407	I-435-1(277)	

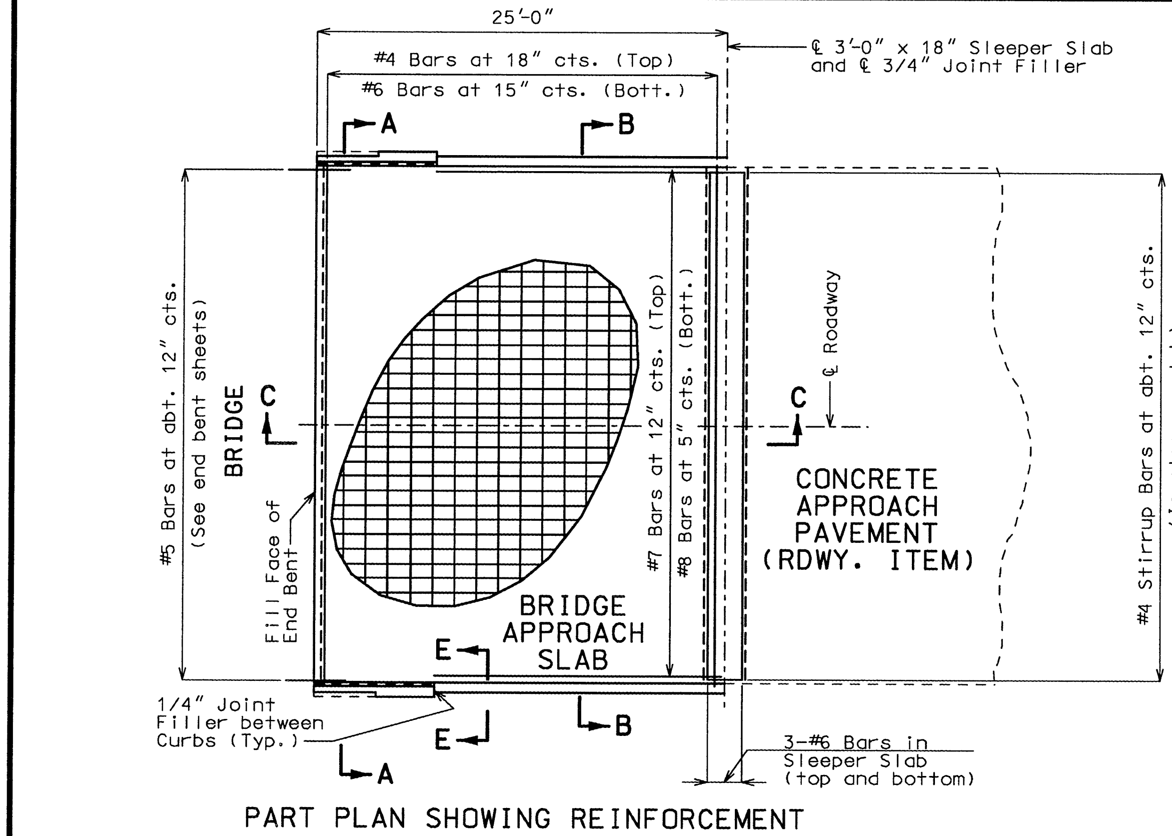

PART PLAN SHOWING REINFORCEMENT

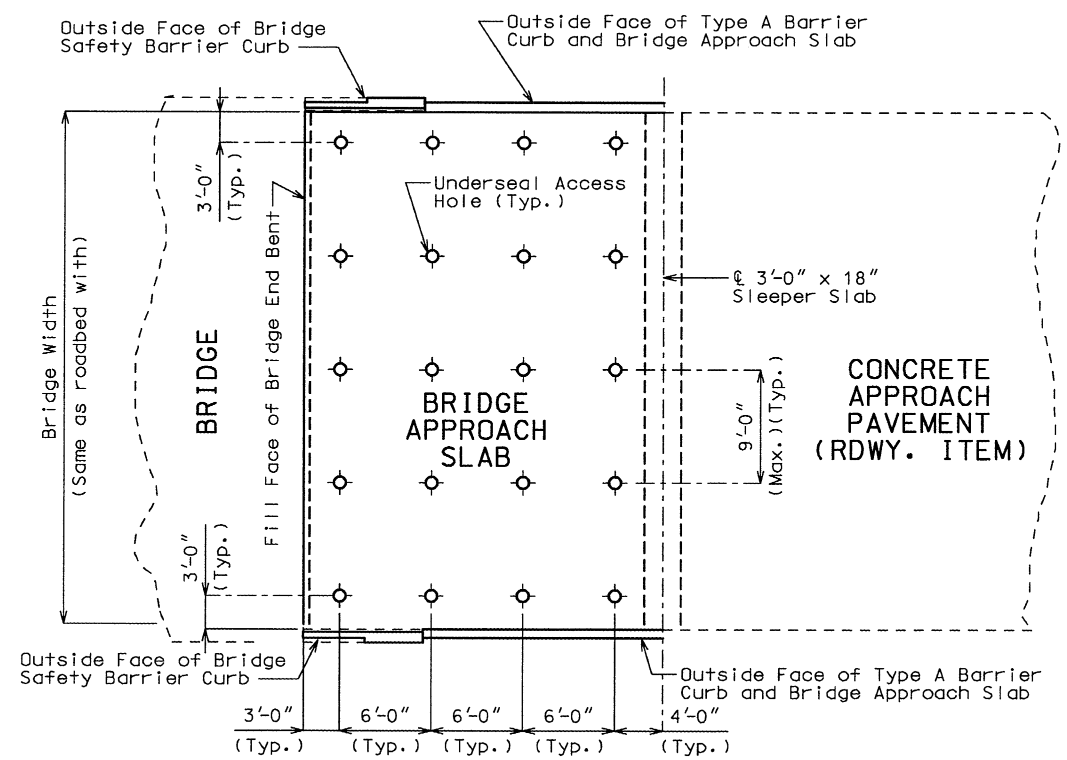

PART PLAN
(SHOWING TYPICAL UNDERSEAL ACCESS HOLE LOCATIONS)

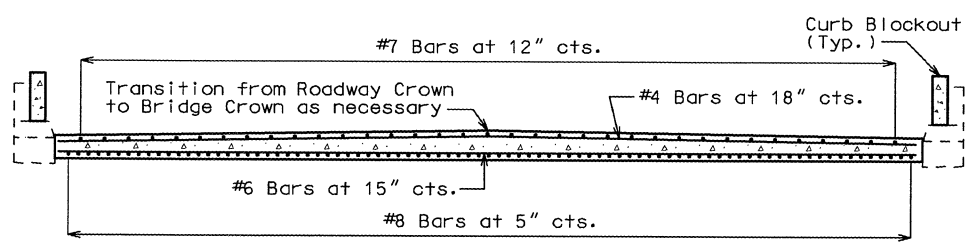

SECTION A-A

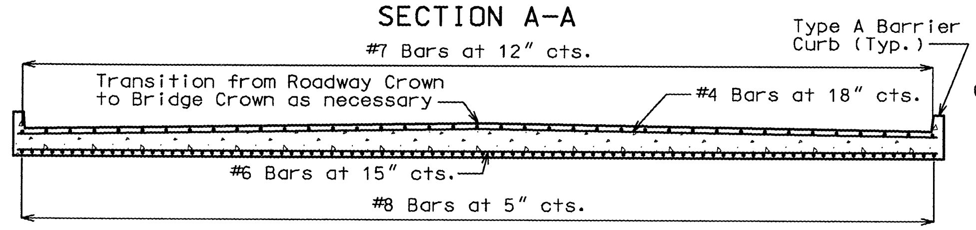

SECTION B-B

Note: With the approval of the Engineer, the contractor may crown the bottom of the approach slab to match the crown of the roadway surface.

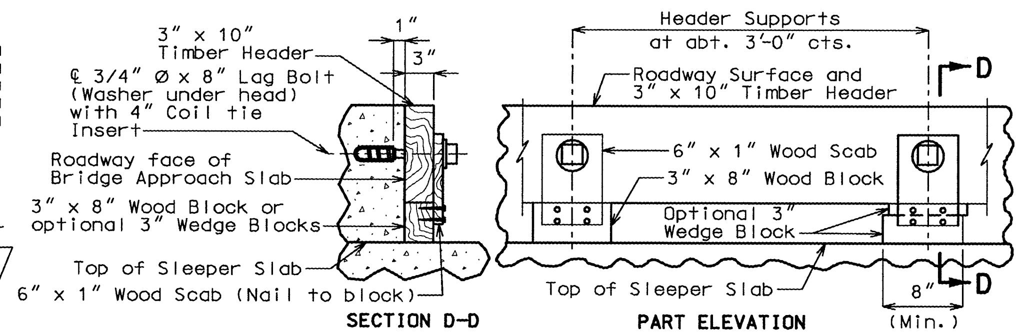

Note: Remove timber header when concrete pavement is placed.

DETAILS OF TIMBER HEADER

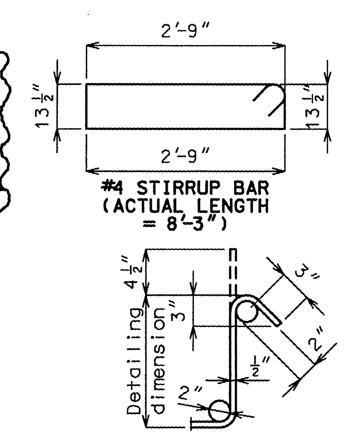

TYPICAL 135° STIRRUP HOOK DIMENSIONS BENDING DIAGRAM

Note:
Nominal lengths are based on out to out dimensions shown in bending diagram and are listed for fabricators use (nearest inch).

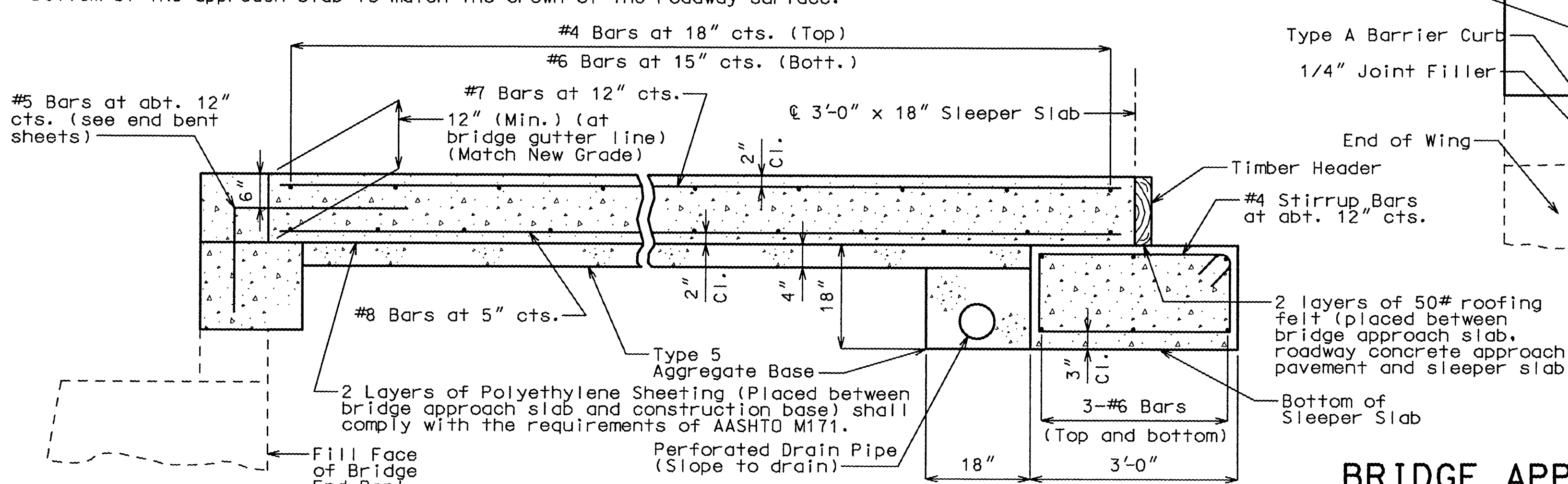

SECTION C-C

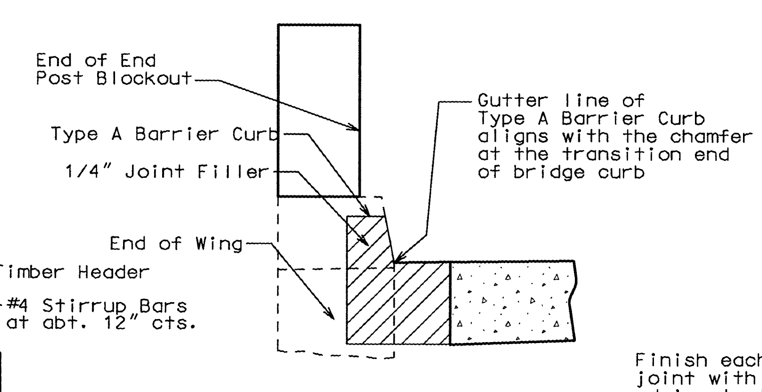

SECTION E-E
(BETWEEN CURBS)

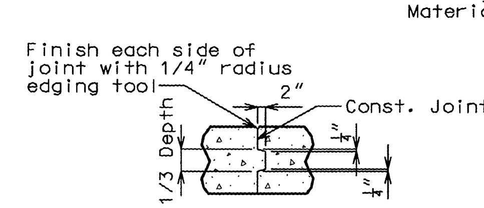

CONST. JOINT DETAIL
(IF REQUIRED)

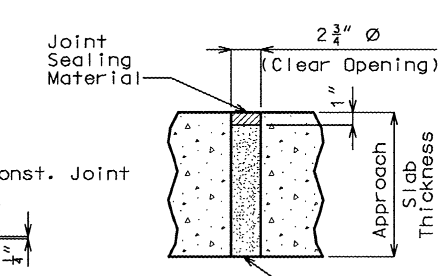

TYPICAL UNDERSEAL ACCESS HOLE DETAIL

GENERAL NOTES:

All concrete for the bridge approach slab and sleeper slab shall be in accordance with Section 503 (f'c = 4,000 psi) of the Missouri Standard Specifications.

All joint filler shall meet the requirements of Section 1057.2.5 of the Missouri Standard Specifications, except as noted.

The reinforcing steel in the bridge approach slab and the sleeper slab shall be epoxy coated Grade 60 with Fy = 60,000 psi.

Minimum clearance to reinforcing steel shall be 1-1/2", unless otherwise shown.

The reinforcing steel in the bridge approach slab and the sleeper slab shall be continuous. The transverse reinforcing steel may be made continuous by lap splicing the #4 & #6 bars 18" and 26" respectively.

Mechanical bar splices will be permitted and shall develop at least 125 percent of the specified yield strength of the reinforcing bars being spliced. The contractor shall furnish the Engineer the manufacturer's certification that this requirement is met and is required to follow the manufacturer's recommendation for installation.

Mechanical bar splices shall be epoxy coated in accordance with Section 710 of the Missouri Standard Specifications.

Hooks and bends shall be in accordance with the CRSI Manual of Standard Practice for Detailing Reinforced Concrete Structures, Stirrup and Tie Dimensions.

The contractor shall pour and satisfactorily finish the bridge slab before pouring the bridge approach slabs.

Longitudinal construction joints in approach slab and sleeper slab shall be aligned with longitudinal construction joints in bridge slab.

Payment for furnishing all materials, labor and excavation necessary to construct the approach slab, including the timber header, sleeper slab, underdrain, Type 5 aggregate base and all other appurtenances and incidental work as shown on this sheet, complete in place, shall be considered as completely covered under the contract unit price for Bridge Approach Slab (Bridge), per sq. yd.

For Concrete Approach Pavement details, see roadway plans.

See Missouri Standard Plans Drawing 609.00 for details of Type A Barrier Curb.

When a lap splice is required for the use of a mechanical bar splice, the minimum lap length shall be 40" for transverse approach slab bar splices.

At the contractor's option, Grade 40 reinforcement may be substituted for the Grade 60 #5 dowel bars connecting the bridge approach slab to the bridge abutment. No additional payment will be made for this substitution.

When Grade 40 reinforcement is substituted for the Grade 60 #5 dowel bars connecting the bridge approach slab to the bridge abutment, the reinforcement may be bent up to 90 degrees with a 2" minimum radius near the abutment to allow compaction of the backfill material near the abutment. Damage to epoxy coating shall be repaired according to Section 710.3.3 of the Missouri Standard Specifications.

Drain pipe may be either 6" diameter corrugated metallic-coated pipe underdrain, 4" diameter corrugated polyvinyl chloride (PVC) drain pipe, or 4" diameter corrugated polyethylene (PE) drain pipe.

FINAL PLANS

STATE OF MISSOURI
KIRSTEN MUNCK
NUMBER PE-2003001076
PROFESSIONAL ENGINEER

BRIDGE APPROACH SLAB

Note: This drawing is not to scale. Follow dimensions.

Detailed Mar. 2002
Checked July 2002

Sheet No. 14 of 15

JACKSON COUNTY A09902

J:\PROJECTS\J4I0712\MicroStation\Bridge\J4I0712\A09902\a09902_014.dgn 06:40:26 AM 03/04/2005

BILL OF REINFORCING STEEL

NO. REQ'D.	MARK NO. SIZE MARK	LOCATION	EPOXY (E)	SHAPE NO.	STIRRUP (S)	SUBSTR. (X)	VARIES (V)	NO. EACH	B FT. IN.	C FT. IN.	D FT. IN.	E FT. IN.	F FT. IN.	H FT. IN.	K FT. IN.	NOMINAL LENGTH FT. IN.	ACTUAL LENGTH FT. IN.	WEIGHT LBS.
		SUPERSTR.																
		END BT 1 & 5																
* 8	6 H1	BACKWALL	E	20					26 9.000							26 9	26 9	321
8	6 H2	BACKWALL	E	20					26 9.000							26 9	26 9	321
54	5 H3	BACKWALL	E	19					21.000	18.000						3 3	3 2	178
38	4 U1	BACKWALL	E	10	S					18.000	9.000					3 9	3 7	91
38	4 U2	BACKWALL	E	10	S					15.000	15.000					3 9	3 7	91
640	5 R3	BARRIER CURB	E	13	S				12.000	21.500	12.000	21.500				6 6	6 2	4116
12	5 R4	BARRIER CURB	E	20					8 3.000							8 3	8 3	103
12	5 R5	BARRIER CURB	E	20					8 9.000							8 9	8 9	110
48	5 R6	BARRIER CURB	E	20					9 9.000							9 9	9 9	488
44	5 R7	BARRIER CURB	E	13	S				22.500	22.000	22.500	22.000				8 4	8 0	367
28	5 R8	BARRIER CURB	E	13	S				18.750	22.000	18.750	22.000				7 9	7 5	217
4	5 R9	BARRIER CURB	E	13	S				18.750	17.000	18.750	17.000				6 11	6 7	27
40	5 R10	BARRIER CURB	E	20					6 0.000							6 0	6 0	250
8	5 R11	BARRIER CURB	E	20					5 9.000							5 9	5 9	48
12	5 R12	BARRIER CURB	E	20					13 9.000							13 9	13 9	172
12	5 R13	BARRIER CURB	E	20					8 5.000							8 5	8 5	105
12	5 R14	BARRIER CURB	E	20					32 4.000							32 4	32 4	405
12	5 R15	BARRIER CURB	E	20					34 9.000							34 9	34 9	435
12	5 R16	BARRIER CURB	E	20					37 3.000							37 3	37 3	466
12	5 R17	BARRIER CURB	E	20					34 2.000							34 2	34 2	428
12	5 R18	BARRIER CURB	E	20					31 0.000							31 0	31 0	388
12	5 R19	BARRIER CURB	E	20					33 10.000							33 10	33 10	423
12	5 R20	BARRIER CURB	E	20					35 6.000							35 6	35 6	444
12	5 R21	BARRIER CURB	E	20					32 8.000							32 8	32 8	409
34	5 R22	BARRIER CURB	E	13	S				12.000	20.500	12.000	20.500				6 4	6 0	213
* 16	5 R23	BARRIER CURB	E	20					12 9.000							12 9	12 9	213
8	5 R24	BARRIER CURB	E	10	S					18.000	2 1.500					5 2	4 11	41
		TOTALS																
	4		E															182
	5		E															10046
	6		E															642
		TOTAL																0
		TOTAL	E															10870
		Slab on Girder																
	4		E															182
	5		E															178
	6		E															642
		TOTAL																1002

BILL OF REINFORCING STEEL

NO. REQ'D.	MARK NO. SIZE MARK	LOCATION	EPOXY (E)	SHAPE NO.	STIRRUP (S)	SUBSTR. (X)	VARIES (V)	NO. EACH	B FT. IN.	C FT. IN.	D FT. IN.	E FT. IN.	F FT. IN.	H FT. IN.	K FT. IN.	NOMINAL LENGTH FT. IN.	ACTUAL LENGTH FT. IN.	WEIGHT LBS.
		Safety																
		Barrier																
		Curb																
	5		E															9868
		TOTAL																9868

State	Proj. No.	Sheet No.
MO	J410712	B15
021115-407	I-435-1(277)	

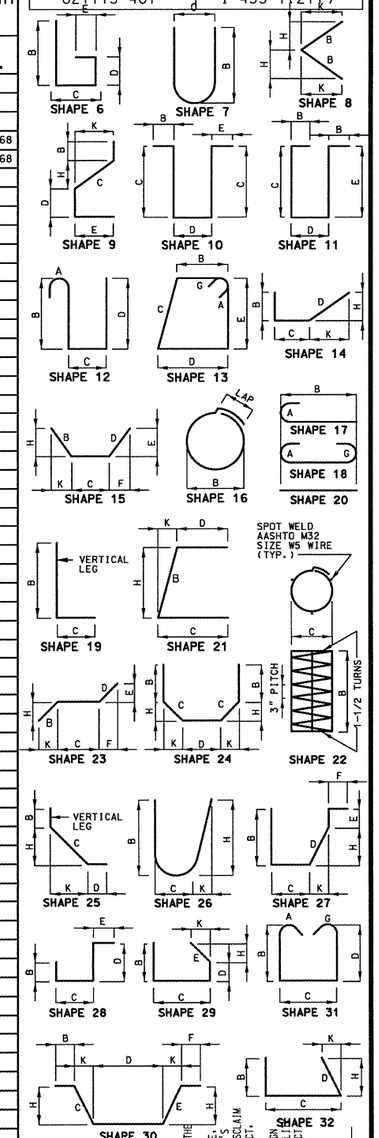

STATE OF MISSOURI
KIRSTEN MUNCK
NUMBER PE-2003001076
PROFESSIONAL ENGINEER

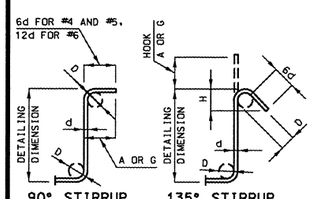

DETAILED JULY 2002
CHECKED JULY 2002

STIRRUP HOOK DIMENSIONS				
GRADES 40 - 50 - 60 KSI				
BAR SIZE	D (IN.)	90° HOOK	135° HOOK	
		HOOK A OR G	HOOK A OR G	APPROX. H
#4	2"	4-1/2"	4-1/2"	3"
#5	2-1/2"	6"	5-1/2"	3-3/4"
#6	4-1/2"	12"	8"	4-1/2"

NOTE: UNLESS OTHERWISE NOTED DIAMETER "D" IS THE SAME FOR ALL BENDS AND HOOKS ON A BAR.

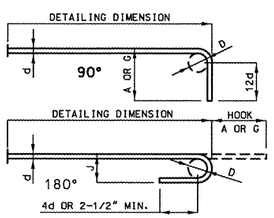

END HOOK DIMENSIONS				
BAR SIZE	D (IN.)	ALL GRADES		
		180° HOOKS		90° HOOKS
		A OR G	J	A OR G
#3	2-1/4"	5"	3"	6"
#4	3"	6"	4"	8"
#5	3-3/4"	7"	5"	10"
#6	4-1/2"	8"	6"	12"
#7	5-1/4"	10"	7"	14"
#8	6"	11"	8"	16"
#9	9-1/2"	15"	11-3/4"	19"
#10	10-3/4"	17"	13-1/4"	22"
#11	12"	19"	14-3/4"	2'-0"
#14	18-1/4"	2'-3"	21-3/4"	2'-7"

* TWO ADDITIONAL #6H1 & #5R23 ARE INCLUDED IN THE BAR BILL FOR TESTING.

NOTE:
ALL STANDARD HOOKS AND BENDS OTHER THAN 180 DEG. TO BE BENT WITH THE SAME PROCEDURE AS FOR 90 DEG. STD. HOOKS.
HOOKS AND BENDS SHALL BE IN ACCORDANCE WITH THE PROCEDURES AS SHOWN ON THIS SHEET.
E = EPOXY COATED REINFORCEMENT.
S = STIRRUP.
X = BAR IS INCLUDED IN SUBSTRUCTURE QUANTITIES.
V = BAR DIMENSIONS VARY IN EQUAL INCREMENTS BETWEEN DIMENSIONS SHOWN ON THIS LINE AND THE FOLLOWING LINE.
NO. EA. = NUMBER OF BARS OF EACH LENGTH.
NOMINAL LENGTHS ARE BASED ON OUT TO OUT DIMENSIONS SHOWN IN BENDING DIAGRAMS AND ARE LISTED FOR FABRICATOR'S USE (NEAREST INCH).
ACTUAL LENGTHS ARE MEASURED ALONG CENTERLINE BAR TO THE NEAREST INCH.
PAYWEIGHTS ARE BASED ON ACTUAL LENGTHS.
FOUR ANGLE OR CHANNEL SPACERS ARE REQUIRED FOR EACH COLUMN SPIRAL. SPACERS ARE TO BE PLACED ON INSIDE OF SPIRALS. LENGTH AND WEIGHT OF COLUMN SPIRALS DO NOT INCLUDE SPLICES OR SPACERS.
REINFORCING STEEL (GRADE 60) = FY 60,000 PSI.

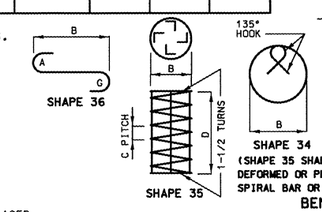

BENDING DIAGRAMS

FINAL PLANS

I CERTIFY THAT THIS PLAN SHEET ACCURATELY DEPICTS THE CONFIGURATION AND LOCATION OF THE ROADWAY AND ALL ITS APPURTENANT FEATURES, TO THE BEST OF MY KNOWLEDGE AS A RESULT OF THE DESIGN EFFORT. I, OR ONE OF MY CONSTRUCTION OF THIS PROJECT, I SPECIFICALLY DISCLAIM AUTHORIZED THE MODIFICATION OF THE PROJECT DESIGN, DURING ITS CONSTRUCTION; AND I DISCLAIM RESPONSIBILITY FOR THE CONTRACTOR'S ACTUAL CONSTRUCTION OF THE PROJECT, EXCEPT AS I AND MY STAFF MAY HAVE DIRECTED OR ORDERED THAT THE PROJECT BE CONSTRUCTED.
ANY RESPONSIBILITY FOR THE MODIFICATION OF THE PROJECT DESIGN, EXCEPT AS I AND MY STAFF MAY HAVE MODIFIED OR

4-25-15
DATE
SIGNATURE

NOTE: THIS DRAWING IS NOT TO SCALE. FOLLOW DIMENSIONS.

SHEET NO. 15 OF 15

JACKSON COUNTY

A09902